CITY OF CHANDLER
CHANGE ORDER NO. 1
DATE 5/31/2022

Change Order not valid until signed by both the City and the Contractor. Contractor's signature indicates agreement herewith, including any adjustments in the Contract Price or Contract Time.

Project Name: **Reclaimed Water Interconnect Facility - GMP 2**

Project No.: **WW1901.402**

User Dept.: Public Works & Utilities NTP Date: May 26, 2022

TO: **McCarthy Building Companies, Inc.** (CONTRACTOR) **6225 N. 24th St., Ste. 200, Phoenix AZ 85016** (Address)

Contractor must make the following changes to this contract: The project is for GMP-2 (Change Order No. 1) for the construction of the Reclaimed Water Interconnect Facility (RWIF), a membrane water treatment facility to be located at the Airport Water Reclamation Facility**.** Major components of the project will include construction of a raw water pump station, self-cleaning strainers, membrane basins, blower building, chemical feed facilities, and related interconnecting piping.

OWNER NAME & DATE APPROVAL: **John Pinkston, 5/25/2022**

Changes result in the following revised contract amount and time:

Original contract amount:	**$5,392,377**
Current contract amount, prior to this Change Order: (incl. previous Change Orders)	**$5,392,377**
Net change resulting from this Change Order: (if over $50,000 from contract amount previously approved by Council, Council approval is required)	**$33,539,073**
Revised contract amount, including this Change Order:	**$38,931,450**
Last contract amount approved by Council:	**$5,392,377**
Change Order % of last contract amount approved by Council: (if over 10% of previous contract amount approved by Council, Council approval is required)	**622%**

Contract time or completion date prior to this Change Order: (incl. previous Change Orders)	440 Days	or	_____ Date
Net change resulting from this Change Order:	357 Days		
Revised contract time OR completion date:	797 Days	or	_____ Date

SIGNATURE PAGE TO FOLLOW

THE ABOVE IS AGREED TO BY:

"CITY" CITY OF CHANDLER

MAYOR

RECOMMENDED BY:

Kimberly Moon, P.E.
CIP City Engineer

APPROVED AS TO FORM:

City Attorney

ATTEST:

City Clerk Seal

"CONTRACTOR"
McCarthy Building Companies, Inc.

06/02/22

Signature Date

Drew Jackson

Print Name

Vice President

Title

djackson@mccarthy.com

Signer Email Address

C: Owner / Project Mgr

City of Chandler Reclaimed Water Interconnect Facility Project

Project No. WW1901.402

GMP #2 Supplemental

April 12, 2022
Rev June 1, 2022

City of Chandler Reclaimed Water Interconnect Facility Project

TABLE OF CONTENTS

SECTION 1	**SCOPE SHEETS & NON-SELECTED BIDS**
SECTION 2	**SUBCONTRACTOR OUTREACH**
SECTION 3	**EQUIPMENT VENDOR CHECK TO SPEC**
SECTION 4	**SELF PERFORM SUPPLIER SUPPORT QUOTES**
SECTION 5	**QUESTION/ANSWER LOG ADDITION INFORMATION**

Project Name: Chandler Reclaimed Water Interconnect Facility
Project No. WW1901.402

Work Category: **01C - Quality Control Testing**

Date: 4/12/2022 Rev 6/1/2022

Recommended

	COMPANY INFORMATION	Western Tech	Alpha Geotech	Ninyo & Moore	ACS Services	SAECO
		Ron Kaiser	Aaron Tiemann	Jony Martinez	Sean Mayfield	Jesse Fromknecht
		602-437-3737	623-414-9909	520-577-7600	480-968-0190	520-709-5134
		ron.K@wt-us.com	atiemann@alphageotech.com	jmmartinez@ninyomoore.com	sean@acsservicesllc.com	jwfromknecht@saecosafe.com
	TOTAL WORK CATEGORY PACKAGE VALUE	**$30,329**	**$36,055**	**$132,185**	**NO BID**	**NO BID**
	MCCARTHY SUBCONTRACT & FRONT END TERMS					
1	Compliant with McCarthy Front Ends	n/a	n/a	n/a		
2	Bid Submitted on McCarthy Bid Form	No	No	No		
3	Bid Bond Included with Bid (if over $500k Sub/$1 Mil Supplier)	n/a	n/a	n/a		
4	Surety Company	n/a	n/a	n/a		
5	Surety AM Best Rating (Must be A- or Better)	n/a	n/a	n/a		
6	AM Best Financial Size X($500M to $750M) or higher	n/a	n/a	n/a		
7	Anticipated contract amount is less than the Federal UW Limit as listed on the Treasury Listing	n/a	n/a	n/a		
8	Bond/CDI Cost	1.295%	1.295%	1.295%		
9	Included Insurance Requirements (Per Matrix)	Yes	Yes	Yes		
10	GL Insurance Company Name	Liberty Mutual	Travelers Indemnity	No		
11	GL Insurance Carrier AM Best Rating (Must be A- or Better)	Yes	Yes	No		
12	PRL Insurance (If required by the Front Ends)	n/a	n/a	n/a		
13	Pollution Insurance (If required by the Front Ends)	n/a	n/a	n/a		
14	Tier 1 Approved	Yes	Yes	Yes		
15	Tier 2 Approved	n/a	n/a	n/a		
16	Safety Items:	Yes	Yes	Yes		
17	OSHA Recordable Incident Rate (Current)	n/a	n/a	n/a		
18	Agrees to comply with PPE requirements including 100% glove policy	Yes	Yes	Yes		
19	Acknowledges updated ladder policy (platform ladders)	Yes	Yes	Yes		
20	Task Hazard Analysis included for all tasks	Yes	Yes	Yes		
21	Tie-off above 6' required	Yes	Yes	Yes		
22	Includes Hoisting for Sub's Own Work Scope	n/a	n/a	n/a		
23	Acknowledges Soils Report	Yes	Yes	Yes		
24	Acknowledges Addenda	n/a	n/a	n/a		
25	Hold Bid for 180 Days	Yes	Yes	Yes		
26	Pricing good for the duration of the project	Yes	Yes	Yes		
27	Sales Tax Included	n/a	n/a	n/a		
28	**Market Questions**					
29	Have you experienced and/or do you anticipate any issues with existing suppliers or vendors?	n/a	n/a	n/a		
30	Do you have any overseas suppliers that may be impeding your supply chain?	n/a	n/a	n/a		
31						
32	Per Plans & Specifications	Yes	Yes	Yes		
33	Division 1 as it relates to this scope of work	Yes	Yes	Yes		
	Scope of Work					
	Base Bid:	$25,947	$30,285	$127,800		
34	Provide all labor, materials, tools, equipment and appurtenances as required to perform the Work Category - 01C Quality Control Testing, in accordance with and reasonably inferable from the Contract Documents, complete and without exception unless otherwise noted below, including, but not limited to the following:	Yes	Yes	Yes		
35	Soil Compaction Unit Rates	n/a	n/a	n/a		
36	Soil Compaction Test	Yes	Yes	Yes		
37	Concrete Break Test Unit Rate	n/a	n/a	n/a		

Project Name: Chandler Reclaimed Water Interconnect Facility
Project No. WW1901.402

Work Category: **01C - Quality Control Testing**

Date: 4/12/2022 Rev 6/1/2022

Recommended

	COMPANY INFORMATION	Western Tech	Alpha Geotech	Ninyo & Moore	ACS Services	SAECO
		Ron Kaiser	Aaron Tiemann	Jony Martinez	Sean Mayfield	Jesse Fromknecht
		602-437-3737	623-414-9909	520-577-7600	480-968-0190	520-709-5134
		ron.K@wt-us.com	atiemann@alphageotech.com	jmmartinez@ninyomoore.com	sean@acsservicesllc.com	jwfromknecht@saecosafe.com
	TOTAL WORK CATEGORY PACKAGE VALUE	**$30,329**	**$36,055**	**$132,185**	**NO BID**	**NO BID**
38	Concrete Break Test (1500 CY Total)	Yes	Yes	Yes		
39	Weld Testing	Yes	$2,615	Yes		
40	NACE Inspection Testing	WC 09A	WC 09A	WC09A		
41	Masonry Grout Testing	Yes	Yes	Yes		
42	Additional Concrete Testing	$2,695	$2,695	$2,695		
43	Additional Trips	$1,300	No	No		
44	COVID-19 Scope Items					
45	Proposal includes CDC, Federal, State and Local OSHA guidelines for COVID-19.	Yes	Yes	Yes		
46	Your proposal shall include all productivity, schedule, and other impacts to cost and schedule.	Yes	Yes	Yes		
47	All personnel onsite must maintain 6'0" spacing between personel and shall have facemasks on at all times that align with CDC, Federal, State or Local OSHA guidelines for COVID-19.	Yes	Yes	Yes		
48	Any personnel reporting symptoms must be immediately reported to McCarthy and follow the apropriate testing and quarantine protocols.	Yes	Yes	Yes		
49						
50	End of Scope					
	Bond/CDI Cost	$388	$461	$1,690		
	TOTAL WORK CATEGORY PACKAGE VALUE	**$30,329**	**$36,055**	**$132,185**		

3/23/2022

Ben Whitlock
Project Manager
McCarthy Building Companies, Inc.
6225 North 24th Street Suite 200
Phoenix AZ 85016

Project: Chandler Reclaimed Water Interconnect Facility
Project Location: McQueen Road and Queen Creek Road, Chandler, AZ

Dear Ben Whitlock

Alpha Geotechnical & Materials, Inc. (Alpha), is pleased to present our estimate for sampling and testing services for this project. This proposal is based upon a review of the Reclaimed Water Interconnect Facility Plans as part of a request for proposal dated 2/28/2022 by Ben Whitlock w/ McCarthy.

PROJECT UNDERSTANDING

The project consists of the interconnect facilities improvements for Chandler Reclaimed Water Facility in Chandler, AZ. Materials sampling and testing services will be required to determine compliance with the applicable specifications and jurisdictional regulations during construction.

Thank you for giving us the opportunity to be a part of your project team. Should you have any questions or require additional information, please do not hesitate to contact me. We have identified the budgeted tasks below, the task details including assumptions are identified in EXHIBIT A, Scope of Services. The Consulting Services Agreement is included in EXHIBIT B.

Budget Summary for - Chandler Reclaimed Water Interconnect Facility

Task Name	Cost
Mass Grading (MG)	$5,414.00
Reclaimed Water (RW)	$3,592.00
Commercial Structure (CS)	$15,599.00
Streets & Street Related Work (ST)	$2,604.00
Project Management (PM)	$3,076.00
Project total:	$30,285.00

** All field tests have a two hour minimum charge on a portal to portal basis and Special Inspectors have a 3 hour minimum charge on a portal to portal basis. Time over the minimum will be rounded up to the nearest whole number. Overtime at 1.5 times the standard rate will be charged after 8 hours ,before 7:00 a.m. and after 5:00 p.m. and also on weekends and holidays. This is a unit rate proposal. Retest, show up and cancellation are not included and will be charged at our standard unit rate fees as listed above. The estimated total is listed for your convenience and may change with project schedules and with small concrete placements etc.

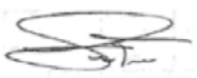

Aaron Tiemann

Project Manager

Exhibit A - Scope of Services
Exhibit B - Consulting Service Agreement

EXHIBIT A
Scope of Services

Mass Grading (MG)

Alpha will complete nuclear density-moisture testing to verify that the building pad is constructed in accordance with the geotechnical engineer's recommendations. Alpha estimates this time will be spread over the number of trips identified in the cost estimate below. In addition to field testing, some laboratory testing will also be required and has been included in our estimate.

Cost Estimate for - Mass Grading (MG)

Description	Qty	Rate	Units	Total
Senior Field Technician	55.00	$60.00	RtHr	$3,300.00
Standard Proctor ASTM D698-C / AASHTO T99-D	1.00	$140.00	EA	$140.00
Plasticity Index (Wet Preparation) ASTM D4318 / AASHTO T89 & T90 & T146	1.00	$160.00	EA	$160.00
Swell (Remolded Sample) ASTM D4546	3.00	$148.00	EA	$444.00
Standard Proctor ASTM D698-A / AASHTO T99-A	3.00	$115.00	EA	$345.00
Gradation of soil or aggregate ASTM C136 & C117 / AASHTO T27 & T11	4.00	$80.00	EA	$320.00
Plasticity Index (Dry Preparation) ASTM D4318 / AASHTO T89 & T90	3.00	$65.00	EA	$195.00
Mileage Charge	15.00	$34.00	Trip	$510.00
			Total for Mass Grading (MG)	$5,414.00

Reclaimed Water (RW)

Alpha will complete nuclear density-moisture testing to check for compliance with the project specificatoins. It is assumed Alpha technicians will be required onsite for mainline, structure backfill, and concrete sampling. In addition to field testing, some laboratory testing will also be required and has been included in our estimate.

Cost Estimate for - Reclaimed Water (RW)

Description	Qty	Rate	Units	Total
Field Tech (3)	50.00	$48.00	RtHr	$2,400.00
Compressive Strength of Concrete Specimens ASTM C39	24.00	$18.00	EA	$432.00
Travel - Trip Charge	20.00	$38.00	Trip	$760.00
			Total for Reclaimed Water (RW)	$3,592.00

Commercial Structure (CS)

Alpha will complete concrete/grout/material sampling to check for compliance with the project related specifications. Special inspections are excluded. It is estimated that all structural concrete will be poured in approximately 30 placements and all grout in-fills in approximately 5 placements. It is estimate the site wall footings will be poured in 3 placements and the site wall grout in 6 placements. Alpha estimates the total number of trips as identified in the cost estimate below. In addition to materials sampling, the associated required laboratory testing has been included in our estimate.

- Materials testing and special inspections are excluded for trash enclosures, pole bases, and concrete bollards, however may be added upon request.

Cost Estimate for - Commercial Structure (CS)

Description	Qty	Rate	Units	Total
Field Technician	171.00	$55.00	RtHr	$9,405.00
Compressive Strength of Grout Prisms ASTM C1019	44.00	$19.00	EA	$836.00
Compressive Strength of Concrete Specimens ASTM C39	132.00	$19.00	EA	$2,508.00
Mileage Charge	75.00	$38.00	Trip	$2,850.00
		Total for Commercial Structure (CS)		$15,599.00

Streets & Street Related Work (ST)

Alpha will complete nuclear density-moisture testing on subgrade materials, collect concrete specimens for laboratory compressive strength testing, and collect samples of asphaltic concrete for compliance with jurisdictional and project specific requirements. Construction of the site civil improvement concrete will requrie 4 placements.

Alpha assumes any required paving operations will be completed in 1 pave day. It is assumed asphaltic concrete coring will not be required for this project. Laboratory testing will also be required to cover the necessary concrete and asphaltic concrete compliance testing. Alpha estimates the total number of trips as identified in the cost estimate below.

- It is assumed that moisture-density relationships for aggregate base materials will be needed.
- Nuclear density testing will be completed during paving operations for informational purposes only.
- Alpha is not responsible for the development of a roll pattern, but will provide data to assist the contractor.
- MCDOT jurisdictional requirements (EOR duties) do not apply to this project.

Cost Estimate for - Streets & Street Related Work (ST)

Description	Qty	Rate	Units	Total
Field Technician	23.00	$55.00	RtHr	$1,265.00
Rice or Maximum Theoretical Specific Gravity ASTM D2041 / AASHTO T209 / Az 417c	1.00	$148.00	EA	$148.00
Gradation of soil or aggregate ASTM C136 & C117 / AASHTO T27 & T11	1.00	$80.00	EA	$80.00
Compressive Strength of Concrete Specimens ASTM C39	16.00	$19.00	EA	$304.00
Plasticity Index (Wet Preparation) ASTM D4318 / AASHTO T89 & T90 & T146	1.00	$160.00	EA	$160.00
Standard Proctor ASTM D698-C / AASHTO T99-D	1.00	$140.00	EA	$140.00
Oil Content by Ignition Method ASTM D6307 / T308A	1.00	$105.00	EA	$105.00
Gradation of extracted aggregate ASTM D6307 / AASHTO T30	1.00	$60.00	EA	$60.00
Mileage Charge	9.00	$38.00	Trip	$342.00
		Total for Streets & Street Related Work (ST)		$2,604.00

Project Management (PM)

Alpha estimates some project management and minor consultation will be necessary over the course of the project. Some of these actives may include assistance with submittal reviews, attendance to a pre-construction meeting, attendance to pre-activity meetings, test schedule development and report development.

- Weekly or monthly budget updates are not included in this fee.
- Project Administration Fee: Alpha's project administration fee covers dispatching, test data management and test data review.

Cost Estimate for - Project Management (PM)

Description	Qty	Rate	Units	Total
Professional Engineer, PE stamp and Review for Final Report	6.00	$120.00	RtHr	$720.00
Project Manager	12.00	$90.00	RtHr	$1,080.00
Administrative Assistant	24.00	$50.00	RtHr	$1,200.00
Mileage Charge	2.00	$38.00	Trip	$76.00
		Total for Project Management (PM)		$3,076.00

EXHIBIT B

Consulting Services Agreement

This CONSULTING SERVICES AGREEMENT is made by and between: -

McCarthy Building Companies, Inc.

hereinafter referred to as CLIENT, and Alpha Geotechnical & Materials, Inc., hereinafter called Alpha.

The CONSULTING SERVICES AGREEMENT between the parties consists of these terms and conditions, the attached PROPOSAL identified as Alpha Proposal Number:

22-CC-12952 dated: 3/23/2022

and any exhibits or attachments noted in the PROPOSAL. Together, these elements will constitute the entire AGREEMENT superseding any and all prior negotiations, correspondence, or agreements either written or oral. Any changes to this CONSULTING SERVICES AGREEMENT must be mutually agreed to in writing.

SECTION 1 - SCOPE OF WORK

Alpha shall perform pursuant to the terms and conditions of this CONSULTING SERVICES AGREEMENT the services as set forth in the accompanying PROPOSAL.

SECTION 2 - PERMITS & UTILITIES

1. Unless otherwise stated in the PROPOSAL, CLIENT shall apply for and obtain all required permits and licenses. CLIENT shall make all necessary arrangements for right of entry to provide Alpha access to the site for all equipment and personnel at no charge to Alpha.

2. While Alpha will take all reasonable precautions to minimize any damage to the property, CLIENT agrees to hold Alpha harmless for any damages to structures or any damage required for right of entry, in the absence of willful and gross misconduct by Alpha.

SECTION 3 - SAMPLES

Samples collected during this work will be retained for approximately 30 days after the sample is collected and then disposed.

SECTION 4 - INVOICES

Alpha will submit monthly progress invoices to CLIENT. Payment is due upon presentation of invoice and is past due thirty (30) days from invoice date. CLIENT agrees to pay a finance charge of one and percent (1 1/2%) per month on past due invoices. Alpha may require a retainer prior to start of work. Alpha will apply the retainer, if applicable, to the final invoice.

SECTION 5 - OWNERSHIP OF DOCUMENTS

1. All reports, field data, field notes, calculations, estimates and other documents prepared by Alpha, as instruments of service, shall remain the property of Alpha.

2. Alpha will retain all pertinent records relating to the services performed for a period of five years following submission of the report, during which period the records will be made available to CLIENT at reasonable times.

SECTION 6 - DISPUTES

In an effort to resolve any conflicts that arise during the design or construction of the Project or following the completion of the Project, the CLIENT and Alpha agree that all disputes arising between them out of or relating to this Agreement or the Project shall be submitted to mediation unless the parties mutually agree otherwise.

SECTION 7 - STANDARD OF CARE & NOTIFICATION

1. Services performed by Alpha under this CONSULTING SERVICES AGREEMENT will be conducted in a manner consistent with that level of care and skill ordinarily exercised by members of the profession currently practicing under similar conditions. No warranty is expressed or implied.

2. Alpha agrees to notify CLIENT when unanticipated hazardous materials or suspected hazardous materials are encountered. CLIENT agrees to make any disclosures required by law to the appropriate governing agencies.

3. Alpha will be responsible for data, interpretations, and recommendations, but shall not be responsible for the interpretation by others of the information developed.

SECTION 8 - LIMITATION OF LIABILITY

1. CLIENT agrees to limit Alpha's liability to CLIENT and all third parties arising from Alpha's negligent acts, errors or omissions, such that the total aggregate liability of Alpha to all those named shall not exceed our fees for the project or $50,000, whichever is less. Neither CLIENT nor any third parties assume any liability for damages to others, which may arise solely on account of Alpha's negligent acts, errors or omissions.

2. As part of the consideration Alpha requires for provision of the Services indicated herein, CLIENT agrees that any claim for damages filed against Alpha by CLIENT of any contractor or subcontractor hired directly or indirectly by CLIENT will be filed solely against Alpha or its successors or assigns and that no individual person shall be made personally liable or liable for damages, in whole or in part.

SECTION 9 - INSURANCE

Alpha represents and warrants that it and its agents, staff and consultants employed by it are protected by worker's compensation insurance and that Alpha has such coverage under public liability and property damage insurance policies which Alpha deems to be adequate. Certificates for all such policies of insurance will be provided to CLIENT, if requested. Within the limits and conditions of such insurance, Alpha agrees to indemnify and hold CLIENT harmless from and against any loss, damage, or liability arising from any negligent acts by Alpha, it agents, staff, and consultants employed by it. Alpha shall not be responsible for any loss, damage or liability arising from any acts by

CLIENT, its agents, staff, and other consultants employed by it.

SECTION 10 - TERMINATION

1. This CONSULTING SERVICES AGREEMENT may be terminated by either party upon seven (7) days written notice in the event of substantial failure by the other party to perform in accordance with the terms hereof, or in the event of the parties' failure to agree upon an adjustment to this CONSULTING SERVICES AGREEMENT in accordance with Section 6. Such termination shall not be effective if that substantial failure has been remedied before expiration of the period specified in the written notice. In the event of termination, Alpha shall be paid for services performed to the termination notice date plus reasonable termination expenses.

2. In the event of termination or suspension for more than three (3) months prior to completion of all reports contemplated by this CONSULTING SERVICES AGREEMENT, Alpha may complete such analyses and records as are necessary to complete ALPHA's Project files and may also complete a report on the services performed to the date of notice of termination or suspension. The expenses of termination or suspension shall include all direct costs of ALPHA in completing such analyses, records and reports.

SECTION 11 - ENTIRE AGREEMENT

This CONSULTING SERVICES AGREEMENT along with the exhibits and/or proposals appended hereto constitute the entire CONSULTING SERVICES AGREEMENT of the parties with respect to the subject matter hereof. The Parties have read the foregoing, understand completely the terms and conditions, and willingly enter into this CONSULTING SERVICES AGREEMENT which will become effective on the date signed by the CLIENT below.

Alpha Geotechnical & Materials, Inc.	**Client**
By (please sign here):	By : (please sign here):
Print Name: Carrie Weaver	Print Name _____
Title: President	Title _____
Date: 3/23/2022	Date _____

Ninyo & Moore
Geotechnical & Environmental Sciences Consultants

March 28, 2022
Proposal No. 12PHX02-04445

Ms. Nicole Azuri

McCarthy Building Companies
6225 North 24th Street, Suite 200
Phoenix, Arizona 85016

Subject: Proposal to Perform Construction Materials Testing and Special Inspection Services
Chandler Reclaimed Water Interconnect Facility
955 E. Queen Creek Rd.
Chandler, Arizona 85286

Dear Ms. Azuri:

We are pleased to present this proposal to provide materials testing and special inspection services at the subject site. In preparation of this proposal, we have reviewed the plans prepared by Wilson Engineers dated February 28, 2022. We understand that this project in includes the addition of a new raw water pump station, self-cleaning strainers, membrane filtration system blower facility, membrane filtration system chemical facility, ACH chemical facility, and membrane electrical building. Additional improvements will include concrete flatwork, underground utilities, and asphalt paving. This proposal was prepared without the benefit of a construction schedule and is based on our assumptions as to the needed materials testing services, and our experience with similar projects.

SCOPE OF SERVICES

Our scope of services will include the following:

- Materials observation, testing, and sampling during the placement of soil, aggregate, concrete, masonry, and asphalt.
- Special inspection observation and testing of reinforced concrete, structural masonry, welding, high strength bolting, post-installed anchors, shallow foundation, and foundation bearing soils.
- Laboratory testing of soil, aggregate, concrete and asphalt.
- Data compilation, analysis, and processing, as well as report review services of laboratory and field test reports.

ASSUMPTIONS

We have made the following assumptions:

- Asphaltic Concrete cores will not be required but can be added as a separate service at an additional price at the request of the contractor.

- Our services will be scheduled and coordinated by the Project Inspector or Construction Manager on an as-needed basis.

- Ninyo and Moore did not have the benefit of having a work schedule when preparing this proposal. Upon availability of a construction schedule, Ninyo & Moore will be allowed to review the schedule to determine if the estimated quantities noted on the attached Table 1 are sufficient to meet the needs of the project.

ESTIMATED FEE

We propose to provide our services on a time-and-materials basis in accordance with the attached Schedule of Fees. We estimate the fee for our services to be approximately $127,800 (One Hundred and Twenty-Seven Thousand and Eight Hundred Dollars). A breakdown of our fees is presented in the attached Table 1.

To authorize our services, please sign and return the attached Work Authorization and Agreement.

We look forward to working with you.

Respectfully submitted,
NINYO & MOORE



Rafael Ramirez
Project Manager



Steven T. Lorenzo
Principal/Director of Business Development

RR/STL/tlp

Attachments: Table 1 – Breakdown of Estimated Fee
Schedule of Fees

Table 1: Breakdown of Estimated Fee for Services								
Earthwork								
Field Technician	500	hours	@	$	50.00	/ hour	$	25,000.00
Nuclear Gauge	500	hours	@	$	10.00	/ hour	$	5,000.00
Vehicle/Equipment Usage	500	hours	@	$	10.00	/ hour	$	5,000.00
				Subtotal			**$**	**35,000.00**
Concrete								
Field Technician	440	hours	@	$	50.00	/ hour	$	22,000.00
Vehicle/Equipment Usage	440	hours	@	$	10.00	/ hour	$	4,400.00
				Subtotal			**$**	**26,400.00**
Special Inspections								
Reinforced Concrete Special Inspector	200	hours	@	$	68.00	/ hour	$	13,600.00
Reinforced Masonry Special Inspector	100	hours	@	$	68.00	/ hour	$	6,800.00
Structural Steel/Welding Special Inspector	125	hours	@	$	68.00	/ hour	$	8,500.00
Vehicle/Equipment Usage	425	hours	@	$	10.00	/ hour	$	4,250.00
				Subtotal			**$**	**33,150.00**
Asphalt Paving								
Field Technician	80	hours	@	$	50.00	/ hour	$	4,000.00
Nuclear Gauge	80	hours	@	$	10.00	/ hour	$	800.00
Vehicle/Equipment Usage	80	hours	@	$	10.00	/ hour	$	800.00
				Subtotal			**$**	**5,600.00**
Laboratory Testing								
Proctor (D698)	3	tests	@	$	125.00	/ test	$	375.00
Gradation of Soils Using Sieve Analysis	3	tests	@	$	110.00	/ test	$	330.00
Atterberg Limits	3	tests	@	$	90.00	/ test	$	270.00
Asphalt Content and Gradation	8	tests	@	$	200.00	/ test	$	1,600.00
Rice Test	8	tests	@	$	125.00	/ test	$	1,000.00
Asphalt Marshall Density	8	tests	@	$	125.00	/ test	$	1,000.00
Concrete Compressive Strength (per cylinder)	550	tests	@	$	15.00	/ test	$	8,250.00
Masonry Grout Compressive Strength	100	tests	@	$	20.00	/ test	$	2,000.00
				Subtotal			**$**	**14,825.00**
Project Management and Data Processing								
Project Engineer/ Geologist/Scientist	110	hours	@	$	96.00	/ hour	$	10,560.00
Data Processor	60	hours	@	$	38.00	/ hour	$	2,280.00
				Subtotal			**$**	**12,840.00**
				TOTAL ESTIMATED FEE			**$**	**127,815.00**

Schedule of Fees

Hourly Charges for Personnel

Professional Staff

Principal Engineer/Geologist/Environmental Scientist/Certified Industrial Hygienist	$ 136
Senior Engineer/Geologist/Environmental Scientist	$ 115
Senior Project Engineer/Geologist/Environmental Scientist	$ 102
Project Engineer/Geologist/Environmental Scientist	$ 96
Senior Staff Engineer/Geologist/Environmental Scientist	$ 90
Staff Engineer/Geologist/Environmental Scientist	$ 80
GIS Analyst	$ 84
Technical Illustrator/CAD Operator	$ 48

Field Staff

Certified Asbestos/Lead Technician	$ 102
Field Operations Manager	$ 74
Nondestructive Examination Technician (UT, MT, LP)	$ 79
Supervisory Technician	$ 68
Special Inspector (Concrete, Masonry, Structural Steel, Welding, and Fireproofing)	$ 68
Senior Technician	$ 54
Technician	$ 50

Administrative Staff

Geotechnical/Environmental/Laboratory Assistant	$ 43
Information Specialist	$ 43
Data Processor	$ 38

Other Charges

Concrete Coring Equipment (includes technician)	$ 190/hr
Anchor Load Test Equipment (includes technician)	$ 190/hr
GPR Equipment	$ 180/hr
Inclinometer	$ 100/hr
Hand Auger Equipment	$ 80/hr
Rebar Locator (Pachometer)	$ 25/hr
Vapor Emission Kit	$ 65/kit
Nuclear Density Gauge	$ 12/hr
X-Ray Fluorescence	$ 70/hr
PID/FID	$ 25/hr
Air Sampling Pump	$ 10/hr
Field Vehicle	$ 10/hr
Expert Witness Testimony	$ 450/hr
Direct Expenses	Cost plus 15 %

Special equipment charges will be provided upon request.

Notes

For field and laboratory technicians and special inspectors, overtime rates at 1.5 times the regular rates will be charged for work performed in excess of 8 hours in one day Monday through Friday and all day on Saturday. Rates at twice the regular rates will be charged for all work in excess of 12 hours in one day, all day Sunday and on holidays.

Field technician and special inspection hours are charged at a 4-hour minimum, and 8-hour minimum for hours exceeding 4 hours.

Invoices are payable upon receipt. A service charge of 1.5 percent per month may be charged on accounts not paid within 30 days.

The terms and conditions are included in Ninyo & Moore's Work Authorization and Agreement form.

Schedule of Fees for Laboratory Testing

SOILS

Atterberg Limits, D 4318, T 89, T90	$ 90
California Bearing Ratio (CBR), D 1883	$ 450
Chloride and Sulfate Content, ARIZ 733, 736	$ 100
Clay Expansion, FHA Swell	$ 110
Consolidation, D 2435, T 216-94	$ 250
Crumb Test Dispersion Test, D 4647	$ 60
Direct Shear, D 3080. T236	$ 350
Expansion Index, D 4829, UBC 18-2	$ 120
Expansion Potential (Method A), D 4546	$ 110
Hydraulic Conductivity, D 5084	$ 300
Hydrometer Analysis, D 7928, T 88-93	$ 200
Double Hydrometer Analysis, D 4221, T 88	$ 400
Lime Determination, pH Method, D 62765	$ 210
Standard Proctor Density, D 698	$ 175
Standard Proctor Density Treated Soils, D 698	$ 195
Modified Proctor Density Treated Soils, D 1557, T 180-93, T 99-94	$ 205
Miller Box Resistivity	$ 60
Moisture, Ash, & Organic Matter of Peat/Organic Soils	$ 90
Moisture Only, D 2216, T 265	$ 25
Moisture and Density, D 2937	$ 35
Permeability, CH, D 2434, T 215	$ 220
pH and Resistivity, ARIZ 236 c	$ 100
Pinhole Dispersion Test, D 4647	$ 245
R-value, D 2844, T 190	$ 250
Sand Equivalent, D 2419, T 176	$ 90
Sieve Analysis, D 6913	$ 55
Sieve Analysis, C-136 (includes 200 wash), D 6913, D 1140	$ 110
Solubility	$ 80
Specific Gravity, D 854, T 100-93	$ 85
Sulfate & Chloride Content	$ 90
Swell Test, D 4546	$ 290
Thermal Resistivity (ASTM 5334, IEEE 442)	$ 800
Triaxial Shear, U.U., D 2850 per point	$ 160
Triaxial Shear, C.U., w/pore pressure, D 4767, T 2297 per pt	$ 315
Triaxial Shear, C.D, D 4767, T 297 per pt	$ 375
Unconfined Compression, D 2166, T 208	$ 175

MASONRY

Brick Absorption, C 67	$ 65
Brick Compression, C 67	$ 30
Brick Moisture, C 67	$ 30
CMU Block Compression Test, 8x8x16, C 140	$ 75
CMU Block Moisture Content, C 140	$ 70
Core Compression	$ 35
Concrete Block Linear Shrinkage, C 426	$ 150
Grout Prisms Compressive Strength, C 1019	$ 40
Masonry Grout, 4x4x8 prism compression, UBC 21-18	$ 22
Masonry Mortar, 2x4 cylinder compression, UBC 21-16	$ 22
Masonry Prism, half size, compression, UBC 21-17	$ 120
Mortar Cubes Compressive Strength, C 109	$ 20

REINFORCING AND STRUCTURAL STEEL

Chemical Analysis, A-36, A615	$ 125
Fireproofing Density Test, UBC 7-6	$ 50
Hardness Test, Rockwell, A-370	$ 40
High Strength Bolt, Nut & Washer Conformance, set, A-325	$ 150
Mechanically Spliced Reinforcing Tensile Test, ACI	$ 80
Pre-Stress Strand (7 wire), A 416	$ 150
Reinforcing Tensile or Bend up to No. 11, A 615 & A 706	$ 85
Structural Steel Tensile Test: Up to 200,000 lbs., A 370	$ 100
Welded Reinforcing Tensile Test: Up to No. 11 bars, ACI	$ 80

CONCRETE

Concrete Core Absorption ASTM C 497 Method A	$ 85
Concrete Core Compressive Strength, C 42 , T 24-93	$ 90
Concrete Coring Minimum Charge	$ 300
Concrete Laboratory Mix Verification, excluding cylinders	$ 300
Concrete Mix Design	$ 2,000
Compression Tests, 6x12 Cylinder, C 39, T 22-92	$ 22
Drying Shrinkage, C 157	$ 300
Flexural Test, C 78	$ 80
Gunite/Shotcrete, Panels, 3 cut cores per panel and test, ACI	$ 190
Lightweight Concrete Fill Compression, C 495	$ 40
Measurement of Concrete Cores, ASTM C 174	$ 20
Rapid Chloride Permeability, C 1202	$ 425
Splitting Tensile Strength, C 496	$ 95
Time of Setting of Cement by Vicat Needle, C 191	$ 250

ASPHALT

Asphalt Mix Design Review	$ 400
Asphalt Mix Design, 5 points, Tex	$ 1,500
Asphalt Content/Gradation (Ignition Oven), T 308, D 6307	$ 200
Bulk Density Lab Molded Samples, Tex 207F (per set)	$ 50
Bulk Specific Gravity per specimen (non-absorptive), D 2726	$ 25
Bulk Specific Gravity per specimen (coated), D 1188	$ 45
Compressive Strength of Hot Mix Asphalt, T 167	$ 275
Extraction, % Asphalt, including Gradation, D 2172, T 164-94 T 30-93, Tex 210F	$ 225
Hveem Stability and Unit Weight CTM or ASTM, CT 366	$ 200
Hveem Stability, Tex 208F (per set)	$ 90
Marshall Mix Design, Flow and Unit Weight, (set of 3) T 245-94	$ 215
Marshall Mix Design	$ 3,500
Maximum Theoretical Unit Weight, D 2041, CT 309, Tex 227F	$ 125
Molding Specimens, Tex 206F (per set)	$ 55
Tensile Strength Ratio D 4867, T283	$ 350
SuperPave Mix Design	$ 4,000

AGGREGATES

Absorption, Coarse, C 127	$ 50
Absorption, Fine, C 128	$ 75
Alkali Reactivity, C 1260	$ 750
Alkali-Silica Reactivity, C 1567	$ 750
Clay Lumps and Friable Particles, C 142	$ 95
Fractured Faces, NDOT, T 2303, ARIZ 212e	$ 140
Los Angeles Abrasion, C 131 or C 535	$ 180
Moisture, C 566, T 255-92	$ 25
Mortar make properties of fine aggregate, C 87	$ 300
Organic Impurities, C 40	$ 50
Sand Equivalent, D 2419, T 176	$ 85
Sieve Analysis, Coarse Aggregate, C 136	$ 110
Sieve Analysis, Fine Aggregate (included wash), C 136	$ 110
Sodium Sulfate Soundness (per size fraction), C 88	$ 240
Specific Gravity, Coarse, C 127	$ 125
Specific Gravity, Fine, C 128	$ 125
Unit Weight C 29, T 19	$ 50

Special preparation of standard test specimens will be charged at the technician's hourly rate.
Ninyo & Moore is accredited to perform the AASHTO equivalent of many ASTM test procedures.

Project Name: Chandler Reclaimed Water Interconnect Facility
Project No. WW1901.402

Work Category: **01E - Surveying**

Date: 4/12/2022 Rev 6/1/2022

Recommended

	COMPANY INFORMATION	Southwest Survey Solutions	Lemme Associates	D2 Surveying		
		Todd Highland	Nicole O'Niell	Jeremy		
		480-522-6661	602-841-6904	480-221-1368		
		toddh@s3-az.com	nicole@lemme-eng.com	jeremy@d2surveying.com		
	TOTAL WORK CATEGORY PACKAGE VALUE	**$24,360**	**$39,200**	**DECLINED**		
	MCCARTHY SUBCONTRACT & FRONT END TERMS					
1	Compliant with McCarthy Front Ends	Yes	Yes			
2	Bid Submitted on McCarthy Bid Form	n/a	n/a			
3	Bid Bond Included with Bid (if over $500k Sub/$1 Mil Supplier)	n/a	n/a			
4	Surety Company	n/a	n/a			
5	Surety AM Best Rating (Must be A- or Better)	n/a	n/a			
6	AM Best Financial Size X($500M to $750M) or higher	n/a	n/a			
7	Anticipated contract amount is less than the Federal UW Limit as listed on the Treasury Listing	Unit Price	Unit Price			
8	Bond/CDI Cost	0.000%	0.000%			
9	Included Insurance Requirements (Per Matrix)	Yes	Yes			
10	GL Insurance Company Name	Country Mutual Insurance Company	Clear Blue Specialty Insurance			
11	GL Insurance Carrier AM Best Rating (Must be A- or Better)	Yes	Yes			
12	PRL Insurance (If required by the Front Ends)	Yes	Yes			
13	Pollution Insurance (If required by the Front Ends)	n/a	n/a			
14	Tier 1 Approved	Yes	Yes			
15	Tier 2 Approved	n/a	n/a			
16	Safety Items:	Yes	Yes			
17	OSHA Recordable Incident Rate (Current)	Yes	Yes			
18	Agrees to comply with PPE requirements including 100% glove policy	Yes	Yes			
19	Acknowledges updated ladder policy (platform ladders)	Yes	Yes			
20	Task Hazard Analysis included for all tasks	Yes	Yes			
21	Tie-off above 6' required	Yes	Yes			
22	Includes Hoisting for Sub's Own Work Scope	n/a	n/a			
23	Acknowledges Soils Report	Yes	Yes			
24	Acknowledges Addenda	n/a	n/a			
25	Hold Bid for 180 Days	Yes	Yes			
26	Pricing good for the duration of the project	Yes	Yes			
27	Sales Tax Included	n/a	n/a			
28	**Market Questions**					
29	Have you experienced and/or do you anticipate any issues with existing suppliers or vendors?	n/a	n/a			
30	Do you have any overseas suppliers that may be impeding your supply chain?	n/a	n/a			
31						
32	Per Plans & Specifications	Yes	Yes			
33	Division 1 as it relates to this scope of work	Yes	Yes			
	Scope of Work					
	Base Bid:	Unit Price	$39,200			
34	Provide all labor, materials, tools, equipment and appurtenances as required to perform the Work Category - 01E Surveying, in accordance with and reasonably inferable from the Contract Documents, complete and without exception unless otherwise noted below, including, but not limited to the following:	Yes	Yes			
35	All scopes include 1 man crew	Yes	Yes			
36	Structural control, layout and benchmarks	Yes	Yes			

Project Name: Chandler Reclaimed Water Interconnect Facility
Project No. WW1901.402

Work Category: **01E - Surveying**

Date: 4/12/2022 Rev 6/1/2022

Recommended

	COMPANY INFORMATION	Southwest Survey Solutions	Lemme Associates	D2 Surveying		
		Todd Highland	Nicole O'Niell	Jeremy		
		480-522-6661	602-841-6904	480-221-1368		
		toddh@s3-az.com	nicole@lemme-eng.com	jeremy@d2surveying.com		
	TOTAL WORK CATEGORY PACKAGE VALUE	**$24,360**	**$39,200**	**DECLINED**		
37	**Locations:**					
38	Raw Water PS (4 days)	$4,640	Yes			
39	Membrane Facility (6 days)	$6,960	Yes			
40	Chemical Facility (4 days)	$4,640	Yes			
41	Blower Bldg. (2 day)	$2,320	Yes			
42	Electrical Bldg. (2 day)	$2,320	Yes			
43	Pipe Line and Ductbank Runs (3 days)	$3,480	Yes			
44	COVID-19 Scope Items					
45	Proposal includes CDC, Federal, State and Local OSHA guidelines for COVID-19.	Yes	Yes			
46	Your proposal shall include all productivity, schedule, and other impacts to cost and schedule.	Yes	Yes			
47	All personnel onsite must maintain 6'0" spacing between personnel and shall have facemasks on at all times that align with CDC, Federal, State or Local OSHA guidelines for COVID-19.	Yes	Yes			
48	Any personnel reporting symptoms must be immediately reported to McCarthy and follow the appropriate testing and quarantine protocols.	Yes	Yes			
49						
50	End of Scope					
	Bond/CDI Cost	$0	$0			
	TOTAL WORK CATEGORY PACKAGE VALUE	**$24,360**	**$39,200**			

BID PROPOSAL

Date 03/15/2022

Bid Proposal of * Lemme Engineering Inc. DBA Lemme Assocaites AZ (hereinafter called "Bidder")

a ** Coporation organized and existing under the laws of the State of Arizona.

* Insert name of firm.
** Insert corporation, partnership, or individual, as applicable.

(INSERT OWNER'S ADDRESS)
TO: McCarthy Building Companies, Inc.
6225 North 24th Street, Suite 200
Phoenix, Arizona 85016

The Bidder, in compliance with your Invitation for Bids for the construction of Chandler Reclaimed Water Interconnect Facility having examined the Contract Documents entitled City of Chandler, Reclaimed Water Interconnect Facility Project, and other related documents and being familiar with the site of the proposed work, and with all of the conditions surrounding the construction of the proposed project including the availability of materials and labor, and the progress of work to date, if any, hereby proposes to furnish all labor, materials, tools, equipment, machinery, equipment rental, transportation, superintendence, perform all work, provide all services, and to construct all work in accordance with the Contract Documents set forth herein, and at the prices stated below. These prices are to cover all expenses incurred in performing the work required.

The Bidder shall attach a copy of Bidders' detailed estimate to its Bid Proposal. This estimate shall identify all quantities shown in the documents or anticipated along with corresponding labor, material and equipment pricing.

After Bid Proposals are received, tabulated, and evaluated by McCarthy, said Bidder agrees to meet with McCarthy for the purpose of determining any duplications, omissions, or mutually agreed bid adjustments. For these meetings, the Bidder agrees to provide a complete, detailed cost breakdown; a list of all sub-subcontractors proposed for use in the work; and a list of all items, materials and their manufacturers proposed for use in the work.

The Bidder, if awarded a Subcontract, agrees to commence work and to fully complete its Work in accordance with a schedule to be established in collaboration with McCarthy under the provisions of the Additional Subcontractor Conditions of the Specifications.

The Bidder acknowledges receipt of the following Addenda: #1.

BASE BID:

The Bidder agrees to perform all **construction staking as clarified by attached exhibit "A"** (herein insert the title of the Work Category as it appears in the Additional Subcontractor Conditions) Work for Work Category No. _____, as described in the Contract Documents, for the Lump Sum of **thirty-nine thousand two hundred dollars and zero cents** DOLLARS ($**39,200.00**).

BID BREAKDOWN:

Raw Water PS	$_____
Membrane Facility/Strainer	$_____
Chemical Facility	$_____
Blower Building	$_____
Electrical Building	$_____
Site Work	$**39,200.00**
Performance & Payment Bond Cost *(If Applicable)*	$_____
Total Subcontract Amount	$**39,200.00**

The name of the proposed Bonding Company is **N/A**

Bond rate _____%

All applicable taxes, except sales and use taxes on materials and equipment which are affixed and made a part of the real estate of the Project, are included in the above Base Bid. Bidder agrees that this Bid Proposal shall be good and may not be withdrawn unless McCarthy does not send Bidder a Subcontract within one hundred eighty (180) calendar days after the opening date of Bid Proposals.

(Amounts shall be shown in both words and figures. In case of discrepancy, the amount shown in words will govern.)

ALTERNATES:

The Bidder further agrees that if any or all of the Alternates listed and described below are incorporated and accepted within sixty (60) calendar days after receipt of a Subcontract from McCarthy, the Bidder will adjust its Subcontract by the amount indicated opposite the Alternates listed below.

ALTERNATE NO. 1: Canopy and Bridge Crane @ Membrane Facility:

ADD the sum of $**N/A**.

CHANGE ORDER RATES: (Add separate sheet as needed)

Markup % (on rates and material): 0.0%.

Position: _____ Rate: _____.

Equipment: _____ Rate: _____.

The Bidder understands that McCarthy reserves the right to reject any or all Bid Proposals and to waive any informalities or irregularities therein.

SELECT AS APPROPRIATE

☒ The Bidder has completed the Prequalification Form together with all other required data for McCarthy's' Contractor Default Insurance Program; OR

☐ The Bidder has not completed the Prequalification Form together with all other required data for McCarthy's' Contractor Default Insurance Program because the Bidder has provided the Form and all such information to McCarthy in the past 12 months for the following project:

_____ Project, which bid on: _____.

RESPONSIVE BID REQUIREMENTS:

DO NOT ENCLOSE YOUR STANDARD TERMS AND CONDITIONS

If any exceptions are taken to the requirements of this Proposal form, attach a separate sheet listing those exceptions, stating the sections and paragraphs and the specific exception.	(initials)
In submitting this proposal, the Bidder certifies that this bid is valid for 180 calendar days.	(initials)
In submitting this Proposal as described herein, we agree to complete the work in accordance with the included Preliminary Construction Sequence.	(initials)
In submitting this Proposal, the Bidder certifies that all cost for extended warranties to start on the date of Substantial Completion is included.	(initials)
In submitting this proposal as described herein, we confirm that we have received, reviewed and agree to all commercial terms stated in the McCarthy Subcontract and Purchase Order Agreement. Any exception taken to the commercial terms stated in these Agreements must be listed on a separate sheet noting the article or paragraph and the specific exception. ***Bidders attached Standard Terms and Conditions will not be acknowledged or accepted as part of any given bid.***	(initials)
In submitting this proposal as described herein, the Bidder certifies that this bid is coordinated based on a complete set of documents and that there will be no claims for change order based on the assertion that the Bidder did not have a complete set of Bidding Documents.	(initials)
In submitting this proposal, the Bidder certifies that they have included all spare parts, training, O & M Manuals, shop drawings and administration costs as associated to comply with the requirements of the specifications and as listed for their scope of work.	(initials)
A bid will be considered non-responsive if the Subcontractor Pre-Qualification Form is not completed as part of the Bid Form **(or on file at McCarthy office)**.	(initials)
The Bidder, by submitting their bid, represents that they have read and understand the scope requirements of the Bidding Documents.	(initials)
The Bidder certifies that any proposed materials in this scope of work meet or exceeds the requirements stated in the specifications unless noted otherwise within this proposal.	(initials)

The bidder certifies that the price listed in this bid is a firm Price through the final delivery of the materials proposed herein, and that no material escalation will be accepted as part of this proposal.	(initials)

Within fifteen (10) days after receipt by the Bidder from McCarthy of the Subcontract or Purchase Order, the Bidder will execute and return to McCarthy said Subcontract or Purchase Order and if notified from McCarthy that Bidder is not to be enrolled in McCarthy's Contractor Default Insurance Program, deliver to McCarthy Performance and Labor and Material Payment Bonds for the Subcontract or a Supply Contract Bond for the Purchase Order, or the difference between the amount of the bid and such larger amount for which McCarthy may subcontract with another party to perform the work covered by said bid, together with all court costs, all attorney fees and all other expense of recovery, all of which shall not exceed the Bid Security attached in the amount of 15% of the bid, will become the property of McCarthy. The bonds shall name McCarthy as Obligee.

If an Individual:

Authorized Signature: _____

Name (print): _____

Email: _____

Business Address: _____

_____

If a Partnership:

Authorized Signature: _____

Name (print): _____

Email: _____

Authorized Signature: _____

Name (print): _____

Email: _____

Business Address: _____

_____

If a Corporation:

Authorized Signature: 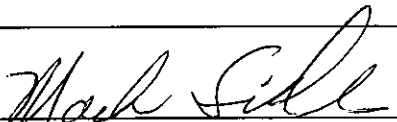

Name (print): **Mark Sidler**

Email: **marcus@lemme-eng.com**

Title: **President**

Business Address: **8607 N 50th Ave #B-4**

Glendale, AZ 85302

Telephone **(602) 841-6904**

Contractor License Number: **Professional License LS 28232**

General Liability Insurance Carrier (not the agent): **Clear Blue Specialty Insurance**

*Please attach a sample certificate of insurance and current W9 form to your bid.

Exhibit "A"

LEMME ASSOCIATES AZ

LAND SURVEYING AND CONSTRUCTION LAYOUT

CONSULTANT:
Lemme Associates AZ
8607 N 59th Ave Suite B4
Glendale, AZ 85302
Phone: 602 841-6904 Fax: 602 841-6351
License/Registration No. 45721
survey@lemme-eng.com

CLIENT:
Name McCarthy Building Companies
Mailing Address 6225 N 24th St, 200
Phoenix, AZ 85016
nazuri@mccarthy.com
Phone: (480) 417-9506 Fax: _____

The property upon which the services hereinafter described are to be performed is located at:

Chandler Reclaimed Water Interconnect Facility - GMP 2 - Chandler, AZ 85286

Assessor's Parcel No. _____ ("the Property"). Sec _____ T _____ R_____ ☒AZ ☐CA

A. CLIENT AND CONSULTANT AGREE AS FOLLOWS:
Client agrees to engage Consultant according to the terms of this agreement ("the Agreement").

1. Scope: Consultant agrees to perform the services set forth on Exhibit "A" attached hereto and incorporated herein by this reference ("Services").

2. Compensation: Client agrees to compensate Consultant for its Services in the amount of $ 39,200.00 **OR** according to the schedule of payments if attached hereto as Exhibit "B" and incorporated herein by this reference ("Schedule"). Consultant reserves the right to increase the fees set forth in Exhibit "B" at reasonable intervals. **Endorsements to insurance certificates, requested by client, that carry fees will be additional to the contract.**

3. Documentation: Client agrees to provide Consultant with any and all documents necessary to identify the ownership, location and condition of the Property, including, but not limited to, deeds, maps, title information, and permits; and to obtain for Consultant the authorization of the owner to enter upon the Property for the purpose of conducting Consultant's Services thereon.

4. Limitation of Liability: In recognition of the relative risks and benefits of the Project to both the Client and the Consultant, the risks have been allocated such that the Client agrees, to the fullest extent permitted by law, to limit the liability of the Consultant and Consultants officers, employees, owners and subconsultants for any and all claims, losses, costs, damages of any nature whatsoever or claims expenses from any cause or causes, including attorneys' fees and costs and expert-witness fees and costs, so that the total aggregate liability of the Consultant and Consultants officers, directors, partners, employees, shareholders, owners and subconsultants shall not exceed the Consultant's total fee for services rendered on this Project. It is intended that this limitation apply to any and all liability or cause of action however alleged or arising, unless otherwise prohibited by law.

IN WITNESS WHEREOF, the parties hereby execute this Agreement upon the terms and conditions stated above and on the date first above written.

CONSULTANT:

By: Tim Gaudette

Title Survey Manager

Date: 03/15/2022

CLIENT:

Sign Here

By: _____

Printed Name: _____

Date: _____

If Attached:
- ❑ Exhibit "A" Client's Initials _____
- ❑ Exhibit "B" Client's Initials _____

EXHIBIT "A"

DESCRIPTION OF SERVICES:

CONSTRUCTION STAKING

BID ITEMS INCLUDE: ONE set of stakes per structure or activity, providing line and grade, defined as an offset to centerline or edge of structure and reference benchmark elevation.

SITE WORK AND GRADING

- ☒ ROUGH grade entire site including retention basins
- ☒ FINISH grade entire site including retention basins

PARKING LOT/ROADWAY

- ☒ Rough Subgrade 50 foot grid
- ☐ Bluetop Subgrade 50 foot grid
- ☒ Bluetop ABC at 25 foot grid/stations
- ☐ Culverts, Box Culverts located and graded
- ☒ Curb and Gutters, Islands, Trash Enclosures

UTILITIES

- ☐ Storm sewer staking and control 50 'Stations
- ☒ San. sewer staking and control 25 'Stations
- ☒ Water line staking and control 50 'Stations
- ☐ Drywell and catch basin locations
- ☐ Electric line staking - centerline with offsets
- ☐ Light pedestals located and graded

BUILDING

- ☒ Pad, Main Corners, Grade
- ☒ Building Finish Floor/Pad Certification

MISCELLANEOUS

- ☐ New curb and gutter (off site)
- ☐ Wall Location
- ☐ Set Monument centerline straddlers
- ☒ Calculations (Need AutoCad File)
- ☒ As-Builts
- ☐ Gridlines - First Floor
- ☐ Gridlines - Upper Floors Add / floor
- ☐ Walks
- ☒ Piping Trenches
- ☐ _____
- ☐ _____
- ☐ _____

NOTE: **1) *"As Builts" on underground utilities must be open trench!!***
2) Need City Approved Plan Set for As-Builts.
3) Need AutoCAD File for Civil Calcs.
4) Contract Charges AND All Outstanding Change Orders, Extra Billing And Reimbursable Expenses Must Be Paid Prior To Receipt Of "As-Built" Drawings.

ADDITIONAL SCOPE

- ☐ Modification to approved plans for As-Builts is at Time and Material Rate.
- ☐ Endorsements to insurance certificates, requested by client, that carry fees will be additional to the contract*
- ☐ Maps for Boundary Surveys are required to be recorded with the County. There is a $50.00 charge.
- ☐ _____
- ☐ _____
- ☐ _____

SURVEY

- ☐ Elevation Cert. (FEMA) _____
- ☐ Boundary Survey _____
- ☐ Topo Survey _____
- ☐ Prelim Grading/Drainage Plan _____
- ☐ Final Grading/Drainage Plan _____
- ☐ Site Plan _____
- ☐ Prelim Plat _____
- ☐ Final Plat _____
- ☐ As-Built Data/Drawing _____
- ☐ ALTA _____

Comments:

☐ TIME AND MATERIAL: ☒ TOTAL LUMP SUM BID: ☐ ITEMIZED ABOVE

Total Contract $39,200.00

Requested Endorsements to General Liability Insurance Certificates will be charged at cost. These endorsements may include but are not limited to: CG2503 - Designated Project General Aggregate Limit, CG2010 - Ongoing Operations, CG2037 - Completed Operations.

EXHIBIT "B"

SCHEDULE OF FEES

OFFICE

PRINCIPAL	$175.00 PER HOUR
REGISTERED PROFESSIONAL ENGINEER/SURVEYOR	$175.00 PER HOUR
INSPECTION & CONSTRUCTION MANAGEMENT	$100.00 PER HOUR
EXPERT WITNESS	$200.00 PER HOUR
CAD DRAFTING	$ 95.00 PER HOUR
CLERICAL / ARCHIVE RESEARCH	$ 85.00 PER HOUR
DESIGN PROFESSIONAL	$125.00 PER HOUR

FIELD SURVEY PARTY AND EQUIPMENT

SURVEY CREW – 2 MAN	$175.00 PER HOUR

OTHER REIMBURSABLE COSTS

BOUNDARY SURVEY RECORDING FEE	$ 50.00
FEES REQUIRED BY GOVERNMENT AUTHORITIES TO BE PAID BY CLIENT	
PLAN SETS	$ 6.00 PER SHEET
MYLAR REPRODUCIBLE COPIES	$ 12.00 PER SHEET
DELIVERIES BY "IN HOUSE" SERVICE	$ 35.00 EACH
COPIES - ARCHIVE RETRIEVAL 8½"X11" SIZE	$ 0.50 PER SHEET
COPIES - ARCHIVE PLAN SHEET	$ 5.00 PER SHEET
COPIES - ARCHIVE ½ SIZE PLAN SHEET	$ 2.50 PER SHEET

EXPEDITED SERVICES WILL BE BILLED 1.5 TIMES THE CONTRACT RATES

(LEMME ENGINEERING ALWAYS STRIVES TO PROVIDE OUR PRODUCTS/SERVICES IN THE MOST TIMELY MANNER. THEREFORE, EXPEDITED SERVICE MAY REQUIRE OVERTIME FOR EMPLOYEES INVOLVED IN THE PROJECT. EXPEDITED SERVICE APPLIES ONLY TO WORK PERFORMED BY LEMME ENGINEERING AND DOES NOT INCLUDE ANY EXPEDITED MUNICIPAL REVIEW)

* *ELECTRONIC PAYMENTS, TRANSFERS AND PAYPAL PAYMENT METHODS ARE AVALIABLE UPON REQUEST. FEES FOR THESE TYPES OF PAYMENT METHODS WILL BE AN ADDITIONAL 5%.*

Project Name: Chandler Reclaimed Water Interconnect Facility
Project No. WW1901.402

Work Category: **02C - Asphalt Paving**

Date: 4/12/2022 Rev 6/1/2022

Recommended

	COMPANY INFORMATION	L&L Asphalt	ViaSun	Cactus Asphalt	L. Keeley	
		John Doerfler	Matt Campbell	Jeffery Price	Justin Naber	
		(480) 363-9157	(602) 768-0620	(480) 298-3040	(480) 205-9657	
		johndoerfler@yahoo.com	matt@viasuncorp.com	jprice@cactusasphalt.com	jnaber@lkeeley.com	
	TOTAL WORK CATEGORY PACKAGE VALUE	**$77,029**	**$85,319**	**$102,551**	**NO BID**	
	MCCARTHY SUBCONTRACT & FRONT END TERMS					
1	Compliant with McCarthy Front Ends	No	No	No		
2	Bid Submitted on McCarthy Bid Form	No	No	No		
3	Bid Bond Included with Bid (if over $500k Sub/$1 Mil Supplier)	n/a	n/a	n/a		
4	Surety Company	n/a	n/a	n/a		
5	Surety AM Best Rating (Must be A- or Better)	n/a	n/a	n/a		
6	AM Best Financial Size X($500M to $750M) or higher	n/a	n/a	n/a		
7	Anticipated contract amount is less than the Federal UW Limit as listed on the Treasury Listing	n/a	n/a	n/a		
8	Bond/CDI Cost	1.295%	1.295%	1.295%		
9	Included Insurance Requirements (Per Matrix)	Yes	Yes	Yes		
10	GL Insurance Company Name	Acuity, A Mutual Insurance Company	Hanover	Acuity, A Mutual Insurance Company		
11	GL Insurance Carrier AM Best Rating (Must be A- or Better)	Yes	Yes	Yes		
12	PRL Insurance (If required by the Front Ends)	n/a	n/a	n/a		
13	Pollution Insurance (If required by the Front Ends)	n/a	n/a	n/a		
14	Tier 1 Approved	Yes	Yes	Yes		
15	Tier 2 Approved	No	No	No		
16	Safety Items:					
17	OSHA Recordable Incident Rate (Current)	0	0	8.22		
18	Agrees to comply with PPE requirements including 100% glove policy	Yes	Yes	Yes		
19	Acknowledges updated ladder policy (platform ladders)	Yes	Yes	Yes		
20	Task Hazard Analysis included for all tasks	Yes	Yes	Yes		
21	Tie-off above 6' required	Yes	Yes	Yes		
22	Includes Hoisting for Sub's Own Work Scope	n/a	n/a	n/a		
23	Acknowledges Soils Report	Yes	Yes	Yes		
24	Acknowledges Addenda	No	No	No		
25	Hold Bid for 180 Days	No	No	No		
26	Pricing good for the duration of the project	6/30/2022	4/24/22	9/30/2022		
27	Sales Tax Included	No	No	No		
28	**Market Questions**					
29	Have you experienced and/or do you anticipate any issues with existing suppliers or vendors?	No	No	No		
30	Do you have any overseas suppliers that may be impeding your supply chain?	No	No	No		
31						
32	Per Plans & Specifications	Yes	Yes	Yes		
33	Division 1 as it relates to this scope of work	Yes	Yes	Yes		
34	01010 - Summary of Work	Yes	Yes	Yes		
35	01300 - Submittals	Yes	Yes	Yes		
36	01640 - Materials and Equipment	Yes	Yes	Yes		
37	01650 - Starting of Systems	Yes	Yes	Yes		
38	01660 - Field Tests of Equipment	Yes	Yes	Yes		
39	01730 - Operation and Maintenance Data	Yes	Yes	Yes		
40	01750 - Spare Parts and Maintenance Materials	Yes	Yes	Yes		
41	01821 Instruction of Operations and Maintenance Personnel	Yes	Yes	Yes		

Project Name: Chandler Reclaimed Water Interconnect Facility
Project No. WW1901.402

Work Category: **02C - Asphalt Paving**

Date: 4/12/2022 Rev 6/1/2022

Recommended

	COMPANY INFORMATION	**L&L Asphalt**	ViaSun	Cactus Asphalt	L. Keeley	
		John Doerfler	Matt Campbell	Jeffery Price	Justin Naber	
		(480) 363-9157	(602) 768-0620	(480) 298-3040	(480) 205-9657	
		johndoerfler@yahoo.com	matt@viasuncorp.com	jprice@cactusasphalt.com	jnaber@lkeeley.com	
	TOTAL WORK CATEGORY PACKAGE VALUE	**$77,029**	**$85,319**	**$102,551**	**NO BID**	
42	02100 - Site Preparation	Yes	Yes	Yes		
43	02500 - Asphalt Pavement	Yes	Yes	Yes		
44	02580 - Pavement Markings	Yes	Yes	Yes		
Scope of Work						
Base Bid:		$76,044	$84,228	$101,240		
45	Provide all labor, materials, tools, equipment and appurtenances as required to perform the Work Category 02C - Asphalt Paving, in accordance with and reasonably inferable from the Contract Documents, complete and without exception unless otherwise noted below, including, but not limited to the following:	Yes	Yes	Yes		
46	Check to Spec completed and submitted to McCarthy	Yes	Yes	Yes		
47	Asphalt Paving	Yes	Yes	Yes		
48	Asphalt Trench Patching	Yes	Yes	Yes		
49	Mobilizations	Yes	Yes	Yes		
50	Fine grading of surface coarse	w/ WC 02B	w/ WC 02B	w/ WC 02B		
51	Verification of subbase coarse	Yes	Yes	Yes		
52	***Escalation Moved F2 Esclation Allowance (Not Calculated in Total WC)***	$15,209	$20,145	$20,248		
53	COVID-19 Scope Items					
54	Proposal includes CDC, Federal, State and Local OSHA guidelines for COVID-19.	Yes	Yes	Yes		
55	Your proposal shall include all productivity, schedule, and other impacts to cost and schedule.	Yes	Yes	Yes		
56	All personnel onsite must maintain 6'0" spacing between personnel and shall have facemasks on at all times that align with CDC, Federal, State or Local OSHA guidelines for COVID-19.	Yes	Yes	Yes		
57	Any personnel reporting symptoms must be immediately reported to McCarthy and follow the appropriate testing and quarantine protocols.	Yes	Yes	Yes		
58						
59	End of Scope					
	Bond/CDI Cost	$985	$1,091	$1,311		
	TOTAL WORK CATEGORY PACKAGE VALUE	**$77,029**	**$85,319**	**$102,551**		

To:	McCarthy Building Company	**Contact:**	Reed Peterson
Address:	6225 N. 24th St., Ste. 200	**Phone:**	480-449-4700
	Phoenix, AZ 85016-2037 UNITED STATES	**Fax:**	480-449-4747
Project Name:	Chandler Reclaimed Water	**Bid Number:**	
Project Location:	Chandler, AZ	**Bid Date:**	3/25/2022

Item #	Item Description	Estimated Quantity	Unit	Unit Price	Total Price
1	Mobilization	1.00	EACH	$6,000.00	$6,000.00
2	4" Asphalt Milling	422.00	SY	$35.00	$14,770.00
3	Asphalt Paving 4" Thick Mag 3/4" PG 70-10 On 6" Mag ABC On Prepared Subgrade	2,824.00	SY	$46.00	$129,904.00
4	Maricopa Thickened Edge	546.00	LF	$4.00	$2,184.00
5	ABC Temp Path 4" Thick And 6' Wide X 430 LF	32.00	CY	$225.00	$7,200.00
6	Asphalt Trench Patching With Edge Milling	24.00	SY	$525.00	$12,600.00
7	ABC Temp Path 4" Thick 3' Wide And 147 ' Long	5.00	CY	$1,200.00	$6,000.00

Total Bid Price: $178,658.00

Notes:

- Standard Terms and Conditions to follow.
- All scheduling contingent upon mutual agreement of Owner and Cactus Asphalt.
- Prices above based on completing each task in one mobilization. If an additional mobilization is required, charges may apply.
- Quoted prices are valid for 30 days unless otherwise noted.
- Cactus is not responsible for notification, nor removal of vehicles and property from work areas.
- Cactus will require this proposal with exclusions be included in any contractual agreement.
- In the event that quantities differ from above, billing will reflect agreed upon measured quantities.
- EXCLUSIONS (Unless Otherwise Specified): Bonds, Permits, Sales Tax, Water Buy, Plans, Engineering, Survey, Staking, Traffic Control, As-Builts, Testing, Inspection, Clear & Grubb, Grading, Landscaping, Weed Killer, Crack Routing, Crack-Sealing, Landscape Materials, Vegetation Replacement, Preservative Seals, Prime Coat, Concrete Structures, Irrigation or Pipe Work, Utility Removal or Relocation, Drywells, Rip/Rap, Structural Backfill, Striping, Signage, Parking Bumpers Removal or Replacement, Import, Export, Excavation, Subgrade Stabilization, Removal of Debris Generated by Other Trades, Erosion Control, Thickened Pavement Edge, Project Information Sign And Any Special Insurance Requirements.
- **Asphalt price good through 9-30-22. Add 3.00 a ton every 3 months after**

ACCEPTED: The above prices, specifications and conditions are satisfactory and hereby accepted. **Buyer:** _____ **Signature:** _____ **Date of Acceptance:** _____	**CONFIRMED:** **Cactus Asphalt** **Authorized Signature:** _____ **Estimator:** Jeffrey Price 480-298-3040 jprice@cactusasphalt.com

PROJECT PROPOSAL - 220011

VIASUN CORPORATION

3621 E. Superior Avenue
Phoenix, Arizona 85040
Contact: **Matt Campbell**
Phone: **602-768-0620**
Email: **matt@viasuncorp.com**

Company:	McCarthy Building Companies, Inc.	Project Name:	Chandler RWIF_Asphalt Paving
Contact:	Reed Peterson	Project Address:	
Address:	6225 North 24th Street, Suite 200	Submitted:	March 24, 2022
Phone:	602-695-2329		
Email:	RPeterson@mccarthy.com	AZ ROC #:	278361 / 297383
		Certifications:	

ITEM	DESCRIPTION	QUANTITY	UNIT	UNIT PRICE	AMOUNT
10	Asphalt Paving Road - 4" AC	2,824.00	SY	30.98	87,487.52
20	Asphalt Paving Maricopa Thickened Edge	546.00	LF	13.70	7,480.20
30	Asphalt Paving Trench Patch - 4" AC	24.00	SY	144.83	3,475.92
GRAND TOTAL					**$98,443.64**

NOTES:

All scheduling contingent upon mutual agreement of Owner and ViaSun Corporation.
ViaSun will require this proposal with exclusions be included in any contractual agreement.
In the event that quantities differ from above, billing will reflect agreed upon measured quantities.
Payment Terms Net 30 Days from submitted invoice.

EXCLUSIONS:
Water, Sales Tax, Bonds, Permits, Plans, Engineering, Survey, Staking, As-Builts, Testing, Inspection, Gradework, Landscape Areas, Weed Killer, Crack Routing, Crack-Sealing, Asphalt Patching, ABC, Vegetation Replacement, Utility Removal or Relocation, Striping, Signage, Subgrade Stabilization, Removal of Debris Generated by Other Trades, Erosion Control, Project Information Sign and Any Special Insurance Requirements.

Subgrade to be provided by others per plans and specifications.
Proposal assumes 7% yield on asphalt, anything exceeding 7% yeild will be billed as overage.
Utility adjustments and pavement markings by others.

Quoted prices valid for 30 days unless otherwise noted.
Prices above based on completing each task in one mobilization. If an additional mobilization is required, charges of $2,500 per day may apply.

Approved By:_____

Date:_____

PO:_____

Project Name: Chandler Reclaimed Water Interconnect Facility
Project No. WW1901.402

Work Category: **02D - Site Concrete**

Date: 4/12/2022 Rev 6/1/2022

Recommended

	COMPANY INFORMATION	ViaSun	Cactus Asphalt	J.F. Ellis Corporation	Rouser Concrete	L.R. Cowan Concrete
		Matt Campbell	Jeffrey Price	Scott Sackrison	Todd Christopherson	Adam Sarver
		(602) 768-0620	(480) 298-3040	(602) 717-6084	(602) 920-1761	(602) 271-0331
		matt@viasuncorp.com	jprice@cactusasphalt.com	scotts@jfellis.com	todd.c rouse@cox.net	adam@lrcowan.com
	TOTAL WORK CATEGORY PACKAGE VALUE	**$146,236**	**DECLINED**	**DECLINED**	**DECLINED**	**DECLINED**
	MCCARTHY SUBCONTRACT & FRONT END TERMS					
1	Compliant with McCarthy Front Ends	No				
2	Bid Submitted on McCarthy Bid Form	No				
3	Bid Bond Included with Bid (if over $500k Sub/$1 Mil Supplier)	n/a				
4	Surety Company	n/a				
5	Surety AM Best Rating (Must be A- or Better)	n/a				
6	AM Best Financial Size X($500M to $750M) or higher	n/a				
7	Anticipated contract amount is less than the Federal UW Limit as listed on the Treasury Listing	n/a				
8	Bond/CDI Cost	1.295%				
9	Included Insurance Requirements (Per Matrix)	Yes				
10	GL Insurance Company Name	Hanover				
11	GL Insurance Carrier AM Best Rating (Must be A- or Better)	Yes				
12	PRL Insurance (If required by the Front Ends)	n/a				
13	Pollution Insurance (If required by the Front Ends)	n/a				
14	Tier 1 Approved	Yes				
15	Tier 2 Approved	No				
16	Safety Items:					
17	OSHA Recordable Incident Rate (Current)	0				
18	Agrees to comply with PPE requirements including 100% glove policy	Yes				
19	Acknowledges updated ladder policy (platform ladders)	Yes				
20	Task Hazard Analysis included for all tasks	Yes				
21	Tie-off above 6' required	Yes				
22	Includes Hoisting for Sub's Own Work Scope	n/a				
23	Acknowledges Soils Report	Yes				
24	Acknowledges Addenda	No				
25	Hold Bid for 180 Days	No				
26	Pricing good for the duration of the project	4/24/22				
27	Sales Tax Included	No				
28	**Market Questions**					
29	Have you experienced and/or do you anticipate any issues with existing suppliers or vendors?	No				
30	Do you have any overseas suppliers that may be impeding your supply chain?	No				
31						
32	Per Plans & Specifications	Yes				
33	Division 1 as it relates to this scope of work	Yes				
34	01010 - Summary of Work	Yes				
35	01300 - Submittals	Yes				
36	01640 - Materials and Equipment	Yes				
37	01650 - Starting of Systems	Yes				
38	01660 - Field Tests of Equipment	Yes				
39	01730 - Operation and Maintenance Data	Yes				
40	01750 - Spare Parts and Maintenance Materials	Yes				
41	01821 Instruction of Operations and Maintenance Personnel	Yes				
42	02100 - Site Preparation	Yes				

Project Name: Chandler Reclaimed Water Interconnect Facility
Project No. WW1901.402

Work Category: **02D - Site Concrete**

Date: 4/12/2022 Rev 6/1/2022

Recommended

	COMPANY INFORMATION	ViaSun	Cactus Asphalt	J.F. Ellis Corporation	Rouser Concrete	L.R. Cowan Concrete
		Matt Campbell	Jeffrey Price	Scott Sackrison	Todd Christopherson	Adam Sarver
		(602) 768-0620	(480) 298-3040	(602) 717-6084	(602) 920-1761	(602) 271-0331
		matt@viasuncorp.com	jprice@cactusasphalt.com	scotts@jfellis.com	todd.c rouse@cox.net	adam@lrcowan.com
	TOTAL WORK CATEGORY PACKAGE VALUE	**$146,236**	**DECLINED**	**DECLINED**	**DECLINED**	**DECLINED**
43	02580 - Pavement Markings	Yes				
44	02751 - Portland Cement Concrete Paving	Yes				
45	03100 - Concrete Formwork	Yes				
46	03200 - Concrete Reinforcement	Yes				
47	03251 - Concrete Joints	Yes				
48	03300 - Cast-in-Place Concrete	Yes				
49	03600 - Grout	Yes				
Scope of Work						
Base Bid:		$144,367				
50	Provide all labor, materials, tools, equipment and appurtenances as required to perform the Work Category 02D - Site Concrete, in accordance with and reasonably inferable from the Contract Documents, complete and without exception unless otherwise noted below, including, but not limited to the following:	Yes				
51	Check to Spec completed and submitted to McCarthy	Yes				
52	Curb & Gutter Replacement	Yes				
53	Valley Gutter Replacement	Yes				
54	Sidewalk Replacement	Yes				
55	Concrete Driveway	Yes				
56	Manhole Adjustment Collars	Yes				
57	Valve Box Adjustment Collars	Yes				
58	Pressure Cleanout Adjustment Collars	Yes				
59	U Type Headwall MAG 501-1 Modified (12' Wingwalls)	Yes				
60	Mobilizations	Yes				
61	Verification of subbase elevations	Yes				
62	All ready-mix per structural Notes and Spec including all applicable admixtures as part of each mix	Yes				
63	Reinforcment as required	Yes				
64	***Escalation Moved F2 Esclation Allowance (Not Calculated in Total WC)***	$28,873				
65	COVID-19 Scope Items					
66	Proposal includes CDC, Federal, State and Local OSHA guidelines for COVID-19.	Yes				
67	Your proposal shall include all productivity, schedule, and other impacts to cost and schedule.	Yes				
68	All personnel onsite must maintain 6'0" spacing between personel and shall have facemasks on at all times that align with CDC, Federal, State or Local OSHA guidelines for COVID-19.	Yes				
69	Any personnel reporting symptoms must be immediately reported to McCarthy and follow the apropriate testing and quarantine protocols.	Yes				
70						
71	End of Scope					
	Bond/CDI Cost	$1,870				
	TOTAL WORK CATEGORY PACKAGE VALUE	**$146,236**				

Project Name: Chandler Reclaimed Water Interconnect Facility
Project No. WW1901.402

Work Category: **02E - Landscaping & Irrigation**

Date: 4/12/2022 Rev 6/1/2022

Recommended

	COMPANY INFORMATION	Sunburst Landscaping	AAA Landscape	Brightview Landscape	Gothic Landscape	
		Noelle Boothby	Reid Iber	Rick Whitman	Rebecca Pearson	
		(602) 920-5938	(602) 330-5698	(602) 300-9473	(602) 388-3202	
		Noelle@sunburstlandscaping.com	R.Iber@aaalandscape.com	richard.whitman@brightview.com	rpearson@gothiclandscape.com	
	TOTAL WORK CATEGORY PACKAGE VALUE	**$86,473**	**DECLINED**	**DECLINED**	**DECLINED**	
	MCCARTHY SUBCONTRACT & FRONT END TERMS					
1	Compliant with McCarthy Front Ends	No				
2	Bid Submitted on McCarthy Bid Form	No				
3	Bid Bond Included with Bid (if over $500k Sub/$1 Mil Supplier)	n/a				
4	Surety Company	n/a				
5	Surety AM Best Rating (Must be A- or Better)	n/a				
6	AM Best Financial Size X($500M to $750M) or higher	n/a				
7	Anticipated contract amount is less than the Federal UW Limit as listed on the Treasury Listing	n/a				
8	Bond/CDI Cost	1.295%				
9	Included Insurance Requirements (Per Matrix)	Yes				
10	GL Insurance Company Name	Selective Ins Co				
11	GL Insurance Carrier AM Best Rating (Must be A- or Better)	Yes				
12	PRL Insurance (If required by the Front Ends)	n/a				
13	Pollution Insurance (If required by the Front Ends)	n/a				
14	Tier 1 Approved	Yes				
15	Tier 2 Approved	No				
16	Safety Items:					
17	OSHA Recordable Incident Rate (Current)	0.00				
18	Agrees to comply with PPE requirements including 100% glove policy	Yes				
19	Acknowledges updated ladder policy (platform ladders)	Yes				
20	Task Hazard Analysis included for all tasks	Yes				
21	Tie-off above 6' required	Yes				
22	Includes Hoisting for Sub's Own Work Scope	Yes				
23	Acknowledges Soils Report	n/a				
24	Acknowledges Addenda	No				
25	Hold Bid for 180 Days	30 days				
26	Pricing good for the duration of the project	No				
27	Sales Tax Included	No				
28	**Market Questions**					
29	Have you experienced and/or do you anticipate any issues with existing suppliers or vendors?	No				
30	Do you have any overseas suppliers that may be impeding your supply chain?	No				
31						
32	Per Plans & Specifications	Yes				
33	Division 1 as it relates to this scope of work	Yes				
34	01010 - Summary of Work	Yes				
35	01300 - Submittals	Yes				
36	01640 - Materials and Equipment	Yes				
37	01650 - Starting of Systems	Yes				
38	01660 - Field Tests of Equipment	Yes				
39	01730 - Operation and Maintenance Data	Yes				
40	01750 - Spare Parts and Maintenance Materials	Yes				
41	01821 - Instruction of Operations and Maintenance Personnel	Yes				
42	02100 - Site Preparations	Yes				

Project Name: Chandler Reclaimed Water Interconnect Facility
Project No. WW1901.402

Work Category: **02E - Landscaping & Irrigation**

Date: 4/12/2022 Rev 6/1/2022

Recommended

	COMPANY INFORMATION	Sunburst Landscaping	AAA Landscape	Brightview Landscape	Gothic Landscape	
		Noelle Boothby	Reid Iber	Rick Whitman	Rebecca Pearson	
		(602) 920-5938	(602) 330-5698	(602) 300-9473	(602) 388-3202	
		Noelle@sunburstlandscaping.com	R.Iber@aaalandscape.com	richard.whitman@brightview.com	rpearson@gothiclandscape.com	
	TOTAL WORK CATEGORY PACKAGE VALUE	**$86,473**	**DECLINED**	**DECLINED**	**DECLINED**	
43	02318 - Crushed Stone, Gravel, and Decomposed Granite	Yes				
44	02319 - Rip Rap	Yes				
45	02371 - Filter Fabric for Rip Rap	Yes				
46	02480 - Landscape	Yes				
47	02810 - Irrigation System	Yes				
Scope of Work						
Base Bid:		$85,367				
48	Provide all labor, materials, tools, equipment and appurtenances as required to perform the Work Category 02E - Landscaping and Irrigation, in accordance with and reasonably inferable from the Contract Documents, complete and without exception unless otherwise noted below, including, but not limited to the following:	Yes				
49	Check to Spec completed and submitted to McCarthy	Yes				
50	Trees	Yes				
51	Cactus	Yes				
52	Decomposed Granite	Yes				
53	Samples of material	Yes				
54	Cleanup of spilled material on asphalt and concrete a. Include sweeping of the asphalt, concrete, sidewalks, etc. Upon completion of this scope of work	Yes				
55	Irrigation tie-ins	Yes				
56	Mobilizations	Yes				
57	***Escalation Moved F2 Esclation Allowance (Not Calculated in Total WC)***	$12,805				
58	COVID-19 Scope Items					
59	Proposal includes CDC, Federal, State and Local OSHA guidelines for COVID-19.	Yes				
60	Your proposal shall include all productivity, schedule, and other impacts to cost and schedule.	Yes				
61	All personnel onsite must maintain 6'0" spacing between personnel and shall have facemasks on at all times that align with CDC, Federal, State or Local OSHA guidelines for COVID-19.	Yes				
62	Any personnel reporting symptoms must be immediately reported to McCarthy and follow the appropriate testing and quarantine protocols.	Yes				
63						
64	End of Scope					
	Bond/CDI Cost	$1,106				
	TOTAL WORK CATEGORY PACKAGE VALUE	**$86,473**				

Project Name: Chandler Reclaimed Water Interconnect Facility
Project No. WW1901.402

Work Category: **03B - Concrete Reinforcing Steel**

Date: 4/12/2022 Rev 6/1/2022

Recommended

COMPANY INFORMATION		**Tyler Reinforcing**	Sun Coast	CMC Rebar	Endo Steel, Inc.	Harris Rebar
		Joel Byko	John Walsh	Alex Drucker	Gary Werlinger	Chad Jones
		520-403-9383	(480) 404-2625	(602) 725-8740	(480) 898-1750	(480) 431-7278
		joel@tylerreinforcing.com	jwalsh@suncoast-pt.com	alexander.drucker@cmc.com	gary@endosteel.com	chjones@harrisrebar.com
TOTAL WORK CATEGORY PACKAGE VALUE		**$464,759**	**$537,978**	**NO BID**	**DECLINED**	**DECLINED**
MCCARTHY SUBCONTRACT & FRONT END TERMS						
1	Compliant with McCarthy Front Ends	Yes	No			
2	Bid Submitted on McCarthy Bid Form	Yes	No			
3	Bid Bond Included with Bid (if over $500k Sub/$1M Supplier)	n/a	n/a			
4	Surety Company	Merchants Bonding	Capitol Indemnity			
5	Surety AM Best Rating (Must be A- or Better)	Yes	Yes			
6	AM Best Financial Size X($500M to $750M) or higher	250M (max)	Yes			
7	Anticipated contract amount is less than the Federal UW Limit as listed on the Treasury Listing	Yes	Yes			
8	Bond/CDI Cost	1.295%	1.295%			
9	Included Insurance Requirements (Per Matrix) - 5M	Yes	No			
10	GL Insurance Company Name	Transportation / Continental	Berkshire Hathaway			
11	GL Insurance Carrier AM Best Rating (Must be A- or Better)	Yes	Yes			
12	PRL Insurance (If required by the Front Ends)	n/a	n/a			
13	Pollution Insurance (If required by the Front Ends)	n/a	n/a			
14	Tier 1 Approved	Yes	Yes			
15	Tier 2 Approved	n/a	n/a			
16	Safety Items:					
17	OSHA Recordable Incident Rate (Current)	2.07	0			
18	Agrees to comply with PPE requirements including 100% glove policy	Yes	Yes			
19	Acknowledges updated ladder policy (platform ladders)	Yes	Yes			
20	Task Hazard Analysis included for all tasks	Yes	Yes			
21	Tie-off above 6' required	Yes	Yes			
22	Includes Hoisting for Sub's Own Work Scope	No	No			
23	Acknowledges Soils Report	n/a	n/a			
24	Acknowledges Addenda	Yes	Yes			
25	Hold Bid for 180 Days	60 days	30 days			
26	Pricing good for the duration of the project	No	Valid through 9/24/2022			
27	Sales Tax Included	No	No			
28	**Market Questions**					
29	Have you experienced and/or do you anticipate any issues with existing suppliers or vendors?	No	No			
30	Do you have any overseas suppliers that may be impeding your supply chain?	No	No			
31						
32	Per Plans & Specifications	Yes	Yes			
33	Div. 01 as it pertains to this scope of work	Yes	Yes			
34	03100 Concrete Formwork	Yes	Yes			
35	03200 Concrete Reinforcement	Yes	Yes			
36	03251 Concrete Joints	Yes	Yes			
37	03300 Cast-In-Place Concrete	Yes	Yes			
Scope of Work						
Base Bid:		$0	$0			

Project Name: Chandler Reclaimed Water Interconnect Facility
Project No. WW1901.402

Work Category: **03B - Concrete Reinforcing Steel**

Date: 4/12/2022 Rev 6/1/2022

Recommended

	COMPANY INFORMATION	Tyler Reinforcing	Sun Coast	CMC Rebar	Endo Steel, Inc.	Harris Rebar
		Joel Byko	John Walsh	Alex Drucker	Gary Werlinger	Chad Jones
		520-403-9383	(480) 404-2625	(602) 725-8740	(480) 898-1750	(480) 431-7278
		joel@tylerreinforcing.com	jwalsh@suncoast-pt.com	alexander.drucker@cmc.com	gary@endosteel.com	chjones@harrisrebar.com
	TOTAL WORK CATEGORY PACKAGE VALUE	**$464,759**	**$537,978**	**NO BID**	**DECLINED**	**DECLINED**
38	Provide all labor, materials, tools, equipment and appurtenances as required to perform the Work Category - 03B Concrete Reinforcing, in accordance with and reasonably inferable from the Contract Documents, complete and without exception unless otherwise noted below, including, but not limited to the following items listed in the scope sheet.	Yes	Yes			
39	Furnish, Fabricate and Install structural cast-in-place reinforcing steel, including the following items: Continuous footings, mat slabs/ slab on grades (SOGs), suspended slabs, walls (retaining, channel, pit/sump..etc.), columns, pedestals, curbs, decks/channels, stairs, mechanical/electrical equipment pads, pipe/equipment supports, specified pipe encasements and trenches.	Yes	Yes			
40	General reinforcing steel locations to include, but not limited to the following Areas:					
41	Raw Water Pump Station - (includes foundation for sliding gate)	$84,587	$94,800			
42	Membrane Facility	$275,497	$335,000			
43	ACH Storage Facility	$9,235	$8,200			
44	Self-Cleaning Strainers Facility	$21,466	Incl w/ Membrane			
45	Electrical Building	$8,043	$9,500			
46	Blower Building	$18,604	$17,300			
47	Existing Chlorine Contact Basin modifications	$2,908	$3,200			
48	MFS Chemical Facility	$28,785	$34,700			
49	Chemical Containment Trench (Qty: 350 LF) - See detail 5/ sheet S-14:	$9,692	$7,200			
50	Pipe Encasements under and (within 5ft) of structures to require reinforcement at the following locations:	Yes	$5,000			
51	70 LF of 24" Drain @ Membrane	Yes	Yes			
52	65 LF of 12" Manifold/Back pulse @ Membrane	Yes	Yes			
53	55 LF of 16" Manifold/Back pulse @ Membrane	Yes	Yes			
54	30 LF of 2" Drain @ Blowers	Yes	Yes			
55	40 LF of 12" Drain @ Strainers	Yes	Yes			
56	15 LF of 24" Surface Water @ Raw Water Pump Station	Yes	Yes			
57	Include Reinforcement at Membrane walls per detail 2/ sheet S-1.47	Yes	Yes			
58	Furnish only vertical starter dowels for the masonry walls.	Yes	Yes			
59	Include price to Furnish only all drilled dowels, slip dowels and other misc. reinforcement items for placement by concrete crews.	Yes	Yes			
60	Furnish all form savers and installation of male ends as noted on drawings. (Female ends to be installed by WC 03A - Concrete subcontractor)	Yes	Yes			
61	Include all supports required for Reinforcement including but not limited to: bolsters, chairs, spacers, stirrups, and other devices for spacing, supporting, and fastening reinforcement in place.	Yes	Yes			
62	Provide standard reinforcement splices, welded splices and/or include the use of mechanical/ bar couplers in lieu of lap splicing where applicable.	Yes	Yes			
63	Coordinate lap splicing with construction joints	Yes	Yes			
64	Furnish & Install extra reinforcing/trim bars around slab edges, wall corners, and all openings as noted in drawings.	Yes	Yes			
65	Provide layout of materials, including dunnage, and store reinforcement on wood blocking to prevent excessive rust and dirt. Clean reinforcement prior to installation.	Yes	Yes			
66	Provide detailing for all shop drawings. Include all test reports and required mill certificates for steel reinforcing components per the Specifications.	Yes	Yes			
67	Include transport, unloading, and hoisting for all concrete reinforcing activities. Equipment and operator for unloading to be supplied by WC 03A subcontractor.	Yes	Yes			
68	Include unloading and inventory of (furnish only) FOB Items.	Yes	Yes			
69	Cleanup/housekeeping of ties and other debris prior to concrete placement	Yes	Yes			
70	Tonnage	150 TN	Yes			

Project Name: Chandler Reclaimed Water Interconnect Facility
Project No. WW1901.402

Work Category: **03B - Concrete Reinforcing Steel**

Date: 4/12/2022 Rev 6/1/2022

Recommended

	COMPANY INFORMATION	**Tyler Reinforcing**	Sun Coast	CMC Rebar	Endo Steel, Inc.	Harris Rebar
		Joel Byko	John Walsh	Alex Drucker	Gary Werlinger	Chad Jones
		520-403-9383	(480) 404-2625	(602) 725-8740	(480) 898-1750	(480) 431-7278
		joel@tylerreinforcing.com	jwalsh@suncoast-pt.com	alexander.drucker@cmc.com	gary@endosteel.com	chjones@harrisrebar.com
	TOTAL WORK CATEGORY PACKAGE VALUE	**$464,759**	**$537,978**	**NO BID**	**DECLINED**	**DECLINED**
71	Qty Form Savers	680 EA	$16,200			
72	***Escalation Moved F2 Esclation Allowance (Not Calculated in Total WC)***	$12,500	$12,500			
73	Set rebar caps/protection (provided and maintained by McCarthy)	Yes	Yes			
74	COVID-19 Scope Items					
75	Proposal includes CDC, Federal, State and Local OSHA guidelines for COVID-19.	Yes	Yes			
76	Your proposal shall include all productivity, schedule, and other impacts to cost and schedule.	Yes	Yes			
77	All personnel onsite must maintain 6'0" spacing between personnel and shall have facemasks on at all times that align with CDC, Federal, State or Local OSHA guidelines for COVID-19.	Yes	Yes			
78	Any personnel reporting symptoms must be immediately reported to McCarthy and follow the appropriate testing and quarantine protocols.	Yes	Yes			
79						
80	End of Scope					
	Bond/CDI Cost	$5,942	$6,878			
	TOTAL WORK CATEGORY PACKAGE VALUE	**$464,759**	**$537,978**			

SUNCOAST POST-TENSION
A KELLER COMPANY

Proposal/Contract

Date	***03/28/22***
Customer	***BAKER***
Attn	***CHRIS***

Project	***CHANDLER RECLAIMED WATER***
Address	***CHANDLER, AZ 85286***

PRICE BASED ON NOTIFICATION OF INTENET TO AWARD WITHIN 15 DAYS OF DATE LISTED ABOVE

LETTER OF INTENT OR CONTRACT MUST BE ISSUED WITHIN 30 DAYS OF DATE LISTED ABOVE

PRICES EXCEEDING THIS TIMEFRAME ARE SUBJECT TO CHANGE DUE TO MARKET CONDITIONS

We propose to:

INCLUDED		Furnish and install concrete reinforcing
	EXCLUDED	Furnish and install WWF
	EXCLUDED	Furnish and install post-tension material
	EXCLUDED	Furnish studrails fob jobsite
INCLUDED		Furnish formsavers fob jobsite

PRODUCT (FURNISH & INSTALL)		***Total units***	***PRICE***
Raw Water Pump Station			$ -
Blower Building			$ 94,800.00
Electrical Building			$ 17,300.00
Chemical Storage Building			$ 9,500.00
ACH Storage Facility			$ 34,700.00
Chlorine Contact Basin			$ 8,200.00
Membrane Facility/Strainer Building			$ 3,200.00
Electrical Duct Bank			$ 335,000.00
Chemical Trench			$ 4,300.00
form savers per plans			$ 7,200.00
			$ 16,200.00
PRICE IS BASED ON PROJECTED MATERIAL COST FINAL CONTRACT			$ -
BASED ON MATERIAL PRICE & DURATION NEGOTIATED BY SUNCOAST			$ -
AND MILL PROVIDER			$ -
THUS MAY RESULT IN INCREASE OR DECREASE AND MAY STIPULATE			$ -
ESCALATION TERMS			$ -
TOTAL PRICE			$ 530,400.00

All material to be shipped by 9/24/2022 PRICE (Tax Excluded)

Submitted By:

John Walsh
Rebar Sales Manager

Accepted By:

Buyer Date

(602) 268-6200
ROC 242133

3807 WEST ADAMS
PHOENIX, AZ

Web : www.suncoast-pt.com

PAYMENT TERMS

Payment for 100% of the value of the material delivered to the job site during the month will be due and payable by the 20th of the following month, but in no case longer than thirty (30) days from the date of the invoice. Accounts past due will bear interest at the rate of one and one half percent (1.5%) per month, or the amount prescribed by law. In the event **SCPT** is required to obtain counsel to collect any sum due hereunder or to enforce any provision hereof, in addition to any sums or other performance due, Buyer shall be responsible for all costs and reasonable attorneys fees incurred by **SCPT** in connection with such collection or enforcement efforts, including but not limited to those incurred for litigation, in addition to any other remedies it may have. If any payment due hereunder is more than thirty(30) days past due, **SCPT** shall have the right to suspend further performance or delivery of materials hereunder until all obligations have been brought current, without liability for delay claims or damages. If any payment due hereunder is more than sixty(60) days past due, **SCPT** shall have the right to declare this contract terminated and shall be relieved of any further obligations hereunder.

DISPUTES

All claims or disputes arising hereunder shall be resolved by and pursuant to the laws and courts of the state of Texas, and Buyer hereby consents to the exclusive jurisdiction of the laws and courts of said State for the resolution of all matters hereunder or related hereto. Buyers obligation to pay the amounts due hereunder is absolute and shall not be affected or suspended by reason of any disputes between Buyer and any other person who is not a party to this contract, nor by the failure of the Buyer to receive payment from any other source.

BACKCHARGES

SCPT will not be responsible for any back-charges unless written notification is provided and approved prior to performing the work.

*Any re-engineering cost incurred by **SCPT** resultant from Contractor's failure to produce updated drawing editions prior to engineering and/or fabrication of affected areas shall be incurred by the Contractor.

*The offer of this proposal is contingent upon credit approval by our Corporate Credit department.

JOBSITE CONDITIONS AND EXCLUSIONS

1. OSHA impalement protection resopnsibility of customer
2. Excludes smooth dowels, threaded bar, weldable bar, pick steel, duct bank, pipe encasement, rebar welded to structural, any item not specifically designed or dimensioned.
3. Customer shall provide lines , grades, templates and adequate steel racks layout by customer shall include control points, joints and all openings.
4. Customer shall provide adequate equipment and operator for unloading, hoisting or lowering material to point of work
5. Customer shall provide adequate equipment and operator for setting prefabricated work.
6. Guying and all related labor, equipment and deadmen by others.
7. Caissons are to be tied and stockpiled at an agreed location. Transporting cages to caisson location, setting of cage, spacerss, chairs pvc or block by others.
8. Pulling, blocking or chairing of wwf excluded
9. Welding, pour watch (except for pt work), installation of sitework and scaffolding
10. Excludes any coating such as epoxy or galvanizing

Price is contingent upon review and acceptance of project schedule

PREVAILING WAGES EXCLUDED. ALL LABOR PROVIDED OPEN SHOP

ALL REBAR TO CONFORM TO ASTM A614 GR 60

(602) 268-6200
ROC 242133

3807 WEST ADAMS
PHOENIX, AZ

Web : www.suncoast-pt.com

1) All Precast Structures.
2) All Masonry Structures - Not in our Scope.
3) For Alternate No #1 (Ref: 4817 Chandler RWIF GMP2/ Pg.no 59 of 152) - No Reinforcement Details.
4) Concrete Landing Pad (Ref: #36/Question & Answer Log, S-2.21) - No Reinforcement.
5) The following Elements has standard details: -

"U" Type Head Wall (Ref: Note #69/C-1.42), 6" Vertical Curb & Gutter (Ref: #14/C-1.43),4" Roll Curb & Gutter (Ref: #19/C-1.44),

3.5" Roll Curb & Gutter (Ref: #20/C-1.44), 24" Ribbon Curb (Ref: #21/C-1.44), Concrete Drive Way (Ref: #35/C-1.44),

Valley Gutter (Ref: #52/C-1.44).

6) The following elements, were Unknown Location: -

Concrete Encasement for Pipes (Ref: 103/C-7.01), CJ-7, CJ-7A Existing Concrete having Provision (Ref: S-10).

Notes: -

1) As per Corresponding Sections (Ref: 3/S-1.04,4/S-1.46 & 1,3,4/S1.49), we have included formsaver and Refer "Summary sheet" for Barsize and quantities.

2) For all Concrete elements, we have used Lap Splice as per Schedule (Ref: S-3).
3) For all masonry wall dowels, we have used Lap Splice as per Schedule (Ref: S-3).
4) All bars shall conform to ASTM A615, Grade 60.

Additional for PT material IF REQ'D

Excludes drilling & grouting, rust proofing of tendon ends, removal of nails or staples from concrete or formwork. Marking of tendon ends.

Excludes measuring, recording, approval or sealing of elongations

customer to provide written authorization to stress

customer to provide written authorization to cut tendon ends

(602) 268-6200
ROC 242133

3807 WEST ADAMS
PHOENIX, AZ

Web : www.suncoast-pt.com

Project Name: Chandler Reclaimed Water Interconnect Facility
Project No. WW1901.402

Work Category: **04A - Masonry**

Date: 4/12/2022 Rev 6/1/2022

Recommended

	COMPANY INFORMATION	Straight Arrow Contracting	Sun Valley Masonry	Alta Vista Masonry	G.V. Masonry	Avila Masonry LLC
		Brian Lewis	John Bailey	Raymond Gallegos	Gary Vickers	Antonio Avila
		623-478-1556	602-620-6263	(602) 513-2934	(623) 581-1777	(623) 931-2757
		Brian@straightarrow.biz	johnbailey@sunvalleyconstruction.com	ray@avmasonry.com	gary@gvmasonry.com	tony@avilamasonry.com
	TOTAL WORK CATEGORY PACKAGE VALUE	**$69,184**	**NO BID**	**NO BID**	**DECLINED**	**DECLINED**
	MCCARTHY SUBCONTRACT & FRONT END TERMS					
1	Compliant with McCarthy Front Ends	No				
2	Bid Submitted on McCarthy Bid Form	Yes				
3	Bid Bond Included with Bid (if over $500k Sub/$1M Supplier)	n/a				
4	Surety Company	Merchants Bonding Company				
5	Surety AM Best Rating (Must be A- or Better)	Yes				
6	AM Best Financial Size X($500M to $750M) or higher	Yes				
7	Anticipated contract amount is less than the Federal UW Limit as listed on the Treasury Listing	Yes				
8	Bond/CDI Cost	1.295%				
9	Included Insurance Requirements (5M)	Yes				
10	GL Insurance Company Name	State Auto Insurance				
11	GL Insurance Carrier AM Best Rating (Must be A- or Better)	Yes				
12	PRL Insurance (If required by the Front Ends)	n/a				
13	Pollution Insurance (If required by the Front Ends)	n/a				
14	Tier 1 Approved	No				
15	Tier 2 Approved	No				
16	Safety Items:					
17	OSHA Recordable Incident Rate (Current)	n/a				
18	Agrees to comply with PPE requirements including 100% glove policy	Yes				
19	Acknowledges updated ladder policy (platform ladders)	Yes				
20	Task Hazard Analysis included for all tasks	Yes				
21	Tie-off above 6' required	Yes				
22	Includes Hoisting for Sub's Own Work Scope	Yes				
23	Acknowledges Soils Report	Yes				
24	Acknowledges Addenda 1 & 2	Yes				
25	Hold Bid for 180 Days	30 days				
26	Pricing good for the duration of the project	Yes				
27	Sales Tax Included	No				
28	**Market Questions**					
29	Have you experienced and/or do you anticipate any issues with existing suppliers or vendors?	No				
30	Do you have any overseas suppliers that may be impeding your supply chain?	No				
31						
32	Per Plans & Specifications	Yes				
33	Div. 01 as it pertains to this scope of work	Yes				
34	03200 - Concrete Reinforcement	Yes				
35	03600 - Grout	Yes				
36	04820 - Reinforced Unit Masonry Assemblies	Yes				
	Scope of Work					
	Base Bid:	$68,300				

Project Name: Chandler Reclaimed Water Interconnect Facility
Project No. WW1901.402

Work Category: **04A - Masonry**

Date: 4/12/2022 Rev 6/1/2022

Recommended

	COMPANY INFORMATION	Straight Arrow Contracting	Sun Valley Masonry	Alta Vista Masonry	G.V. Masonry	Avila Masonry LLC
		Brian Lewis	John Bailey	Raymond Gallegos	Gary Vickers	Antonio Avila
		623-478-1556	602-620-6263	(602) 513-2934	(623) 581-1777	(623) 931-2757
		Brian@straightarrow.biz	johnbailey@sunvalleyconstruction.com	ray@avmasonry.com	gary@gvmasonry.com	tony@avilamasonry.com
	TOTAL WORK CATEGORY PACKAGE VALUE	**$69,184**	**NO BID**	**NO BID**	**DECLINED**	**DECLINED**
38	Provide all labor, materials, tools, equipment and appurtenances as required to perform the Work Category 04A - Masonry, in accordance with and reasonably inferable from the Contract Documents, complete and without exception unless otherwise noted below, including, but not limited to the following:	Yes				
39	Mock ups per the Specifications. Includes maintaining and removing mock-up during/ and or after construction when directed by Architect.	Yes				
40	Attend all Meetings required, including but not limited to: Pre-installation / Pre-Construction meetings, Shop Drawing / Mock-up reviews, and coordination meetings with other trades.	Yes				
41	Include all Submittals required per the Specs, which include: Shop Drawings, block samples, Manufacturer's Certificates (for masonry units and grout), Testing Agency Qualifications and Test Reports.	Yes				
42	Masonry Wall areas to include, but are not limited to, the Raw Water Pump Station.	Yes				
43	Provide Concrete Masonry Units per the Schedule (See Spec Section 04820) and Drawings. Units to be Type "A", Size: 8"w x 8"d x 16"L unless noted otherwise.	Yes				
44	Provide total masonry wall length in SF.	210 LF				
45	Include all block types/patterns, colors and layouts noted in the Architectural Drawings, sheet A-1.02.	Yes				
46	Include special shaped/ non-standard blocks configured for corners, lintel, headers , control joint edges, and other detailed conditions noted.	Yes				
47	Masonry walls shall have solid grouted cells	Yes				
48	Grout mix to have a 2000 psi strength w/ 7"to 8" slump	Yes				
49	Mortar mix to have average compressive strength of 2000 psi	Yes				
50	Where noted in the Specs and drawings include the following:					
51	Drainage blocks	Yes				
52	8" bond beams	Yes				
53	4" solid cap blocks - see A. 1.02 and S-13 detail 4 does not show this on architectural.	Yes				
54	Furnish and Install ultra-barrier strips on top of masonry wall.	Yes				
55	Furnish and Install all reinforcement for the masonry blocks per the plans and specifications (see schedule). Include standard joint reinforcement, lap joint reinforcement, and bond beam reinforcement.	Yes				
56	Include extra reinforcement at masonry wall openings/ends, corners and at intersections.	Yes				
57	Include installation of gate eye plate to be anchored to masonry (Furnished by WC 05C subcontractor). See sheet A-1.03 for location details.	Yes				
58	Other Masonry Items to include, but not limited to:					
59	Water repellant used in Masonry units	Yes				
60	CMU Control Joints as required	Yes				
61	Sealing and Caulking of masonry control joints	Yes				
62	Anchor, Ties, and Metal Accessories	Yes				
63	Masonry Waste Disposal	Yes				
64	Efflorescence Removal after initial Cleaning	Yes				
65	Preparing, pointing & cleaning as required	Yes				
66	Wall Bracing where applicable	N/A				
67	Engineering for Wall Bracing if applicable	N/A				
68	Trash removal from job site	Yes				
69	Follow Hot & Cold Weather Protection/Requirements	Yes				
70	Single Mobilization	Yes				

Project Name: Chandler Reclaimed Water Interconnect Facility
Project No. WW1901.402

Work Category: **04A - Masonry**

Date: 4/12/2022 Rev 6/1/2022

Recommended

	COMPANY INFORMATION	Straight Arrow Contracting	Sun Valley Masonry	Alta Vista Masonry	G.V. Masonry	Avila Masonry LLC
		Brian Lewis	John Bailey	Raymond Gallegos	Gary Vickers	Antonio Avila
		623-478-1556	602-620-6263	(602) 513-2934	(623) 581-1777	(623) 931-2757
		Brian@straightarrow.biz	johnbailey@sunvalleyconstruction.com	ray@avmasonry.com	gary@gvmasonry.com	tony@avilamasonry.com
	TOTAL WORK CATEGORY PACKAGE VALUE	**$69,184**	**NO BID**	**NO BID**	**DECLINED**	**DECLINED**
71	Scaffolding to complete work	Yes				
72	Protect masonry during erection by covering tops of walls, wall surfaces, projections, and sills with waterproof sheeting at end of each days work. Cover partially completed masonry when construction is not in progress.	Yes				
73	Provide equipment as needed for complete scope of work	Yes				
74	***Escalation Moved F2 Esclation Allowance (Not Calculated in Total WC)***	$6,830.00				
75	COVID-19 Scope Items					
76	Proposal includes CDC, Federal, State and Local OSHA guidelines for COVID-19.	Yes				
77	Your proposal shall include all productivity, schedule, and other impacts to cost and schedule.	Yes				
78	All personnel onsite must maintain 6'0" spacing between personnel and shall have facemasks on at all times that align with CDC, Federal, State or Local OSHA guidelines for COVID-19.	Yes				
79	Any personnel reporting symptoms must be immediately reported to McCarthy and follow the appropriate testing and quarantine protocols.	Yes				
80						
81	End of Scope					
	Bond/CDI Cost	$884				
	TOTAL WORK CATEGORY PACKAGE VALUE	**$69,184**				

Project Name: Chandler Reclaimed Water Interconnect Facility
Project No. WW1901.402

Work Category: **05A - Structural Steel**

Date: 4/12/2022 Rev 6/1/2022

Recommended

	COMPANY INFORMATION	GrayWolf	Revolution Industrial	Able Steel	W&W Structural	Schuff Steel
		David Butler	Isaac Zornes	Roy Walker	Colton Malenfant	Ryan Percell
		(480) 718-2552	(602) 245-2008	(480) 830-2253	(480) 966-9427	(602) 687-1702
		david.butler@graywolf.com	izornes@revolutionindustrial.com	rwalker@ablesteel.com	colton@w-ws.com	ryan.percell@schuff.com
	TOTAL WORK CATEGORY PACKAGE VALUE	**$610,311**	**$755,793**	**$799,379**	**DECLINED**	**DECLINED**
	MCCARTHY SUBCONTRACT & FRONT END TERMS					
1	Compliant with McCarthy Front Ends	Yes	Yes	Yes		
2	Bid Submitted on McCarthy Bid Form	Yes	Yes	Yes		
3	Bid Bond Included with Bid (if over $500k Sub/$1 Mil Supplier)	Yes	Yes	Yes		
4	Surety Company	Euler Hermes	Old Republic	Westfield Insurance Co.		
5	Surety AM Best Rating (Must be A- or Better)	Yes	Yes	Yes		
6	AM Best Financial Size X($500M to $750M) or higher	Yes	Yes	Yes		
7	Anticipated contract amount is less than the Federal UW Limit as listed on the Treasury Listing	Yes	Yes	Yes		
8	Bond/CDI Cost	1.250%	1.120%	1.500%		
9	Included Insurance Requirements (Per Matrix)	Yes	Yes	Yes		
10	GL Insurance Company Name	XL Insurance	Crest Insurance	Amerisure		
11	GL Insurance Carrier AM Best Rating (Must be A- or Better)	Yes	Yes	Yes		
12	PRL Insurance (If required by the Front Ends)	Yes	Yes	Yes		
13	Pollution Insurance (If required by the Front Ends)	n/a	n/a	n/a		
14	Tier 1 Approved	Yes	Yes	Yes		
15	Tier 2 Approved	No	No	No		
16	Safety Items:					
17	OSHA Recordable Incident Rate (Current)	0.65	0	4.51		
18	Agrees to comply with PPE requirements including 100% glove policy	Yes	Yes	Yes		
19	Acknowledges updated ladder policy (platform ladders)	Yes	Yes	Yes		
20	Task Hazard Analysis included for all tasks	Yes	Yes	Yes		
21	Tie-off above 6' required	Yes	Yes	Yes		
22	Includes Hoisting for Sub's Own Work Scope	Yes	Yes	Yes		
23	Acknowledges Soils Report	Yes	n/a	n/a		
24	Acknowledges Addenda	Yes	Yes	Yes		
25	Hold Bid for 180 Days	No	No	No		
26	Pricing good for the duration of the project	No	No	No		
27	Sales Tax Included	No	No	No		
28	**Market Questions**					
29	Have you experienced and/or do you anticipate any issues with existing suppliers or vendors?	No	Aluminum supply has been affected.	No		
30	Do you have any overseas suppliers that may be impeding your supply chain?	No	No	No		
31						
32	Per Plans & Specifications	Yes	Yes	Yes		
33	Division 1 as it relates to this scope of work	Yes	Yes	Yes		
34	01010 - Summary of Work	Yes	Yes	Yes		
35	01300 - Submittals	Yes	Yes	Yes		
36	01640 - Materials and Equipment	Yes	Yes	Yes		
37	03600 - Grout	Yes	Yes	Yes		
38	05051 - Anchor Bolts, Toggle Bolts, and Concrete Inserts	Yes	Yes	Yes		
39	05120 - Structural Framing	Yes	Yes	Yes		
40	05500 - Metal Fabrications	Yes	Yes	Yes		
41	05510 - Metal Stairs	Yes	Yes	Yes		

Project Name: Chandler Reclaimed Water Interconnect Facility
Project No. WW1901.402

Work Category: **05A - Structural Steel**

Date: 4/12/2022 Rev 6/1/2022

Recommended

	COMPANY INFORMATION	GrayWolf	Revolution Industrial	Able Steel	W&W Structural	Schuff Steel
		David Butler	Isaac Zornes	Roy Walker	Colton Malenfant	Ryan Percell
		(480) 718-2552	(602) 245-2008	(480) 830-2253	(480) 966-9427	(602) 687-1702
		david.butler@graywolf.com	izornes@revolutionindustrial.com	rwalker@ablesteel.com	colton@w-ws.com	ryan.percell@schuff.com
	TOTAL WORK CATEGORY PACKAGE VALUE	**$610,311**	**$755,793**	**$799,379**	**DECLINED**	**DECLINED**
42	09900 - Painting	Yes	Yes	Yes		
43	10210 - Privacy Panels	Yes	Yes	Yes		
44	13121 - Metal Canopies	Yes	Yes	Yes		
Scope of Work						
Base Bid:		$403,532	$663,584	$526,956		
45	Provide all labor, materials, tools, equipment and appurtenances as required to perform the Work Category 05A - Structural Steel, in accordance with and reasonably inferable from the Contract Documents, complete and without exception unless otherwise noted below, including, but not limited to the following:	Yes	Yes	Yes		
46	Check to Spec completed and submitted to McCarthy	Yes	Yes	Yes		
47	Bid Held for how many days	15 days	10 days	15 days		
48	***Escalation Moved F2 Esclation Allowance (Not Calculated in Total WC)***	$42,000	$39,207	$52,527		
49	Include structural steel bridge brane alternate at membrane facility	$137,000	$56,744	$198,378.00		
50	Truck ends on bridge crane beam	Yes	Yes	Yes		
51	Columns, beams, anchor bolts, and metal decking over electrical equipment in the Raw Water Pump Station	Yes	Yes	Yes		
52	Columns, beams, anchor bolts and metal decking over Self Cleaning Strainers	Yes	Yes	Yes		
53	Columns, beams, anchor bolts, and metal decking over Membrane Facility	Yes	Yes	Yes		
54	Columns, beams, anchor bolts, and metal decking over Chemical Storage	Yes	Yes	Yes		
55	Columns, beams, anchor bolts, and metal decking over ACH Facility	Yes	Yes	Yes		
56	Install new canopy at chlorine contact basin	$7,650	Yes	$35,138		
57	Removal of canopy at chlorine contact basin	$2,714	$2,714	$2,714		
58	Shade pick up on sides of canopy	$24,380	$24,380	$24,380		
59	Overhead Protection and Layout Cost	$20,000	Yes	Yes		
60	Site Cleaning	$7,500	Yes	Yes		
61	Include grating walkway support beams W 8x18 in the membrane facility	Yes	Yes	Yes		
62	Exclude Guardrail, grating, access hatches, pipe supports, stairs, ladders, bollards, cantilevered sliding gates, shade screens, and FRP materials	WC 05B	WC 05B	WC 05B		
63	All metallic surfaces (including pipe, supports, and enclosure) shall be primed per the requirements of the 09900 - Painting	Yes	Yes	Yes		
64	Decking to come primed	WC 09A	WC 09A	WC 09A		
65	Shipping shall be FOB jobsite	Yes	Yes	Yes		
66	Unloading & storage	Yes	Yes	Yes		
67	Temporary protection & enclosure	Yes	Yes	Yes		
68	COVID-19 Scope Items					
69	Proposal includes CDC, Federal, State and Local OSHA guidelines for COVID-19.	Yes	Yes	Yes		
70	Your proposal shall include all productivity, schedule, and other impacts to cost and schedule.	Yes	No	Yes		
71	All personnel onsite must maintain 6'0" spacing between personnel and shall have facemasks on at all times that align with CDC, Federal, State or Local OSHA guidelines for COVID-19.	Yes	Yes	Yes		
72	Any personnel reporting symptoms must be immediately reported to McCarthy and follow the appropriate testing and quarantine protocols.	Yes	Yes	Yes		
73						
74	End of Scope					
	Bond/CDI Cost	$7,535	$8,371	$11,813		

Project Name: Chandler Reclaimed Water Interconnect Facility
Project No. WW1901.402

Work Category: **05A - Structural Steel**

Date: 4/12/2022 Rev 6/1/2022

Recommended

COMPANY INFORMATION	**GrayWolf**	Revolution Industrial	Able Steel	W&W Structural	Schuff Steel
	David Butler	Isaac Zornes	Roy Walker	Colton Malenfant	Ryan Percell
	(480) 718-2552	(602) 245-2008	(480) 830-2253	(480) 966-9427	(602) 687-1702
	david.butler@graywolf.com	izornes@revolutionindustrial.com	rwalker@ablesteel.com	colton@w-ws.com	ryan.percell@schuff.com
TOTAL WORK CATEGORY PACKAGE VALUE	**$610,311**	**$755,793**	**$799,379**	**DECLINED**	**DECLINED**
TOTAL WORK CATEGORY PACKAGE VALUE	**$610,311**	**$755,793**	**$799,379**		

ABLE
STEEL
FABRICATORS, INC.

COMMERCIAL & INDUSTRIAL
STRUCTURAL & MISCELLANEOUS
STEEL

Date: March 25, 2022

Quote No: 22RW022

To: McCarthy Building Companies

Attn: Austin Hancock

Ref: Chandler Reclaimed Water Facility

We are pleased to offer our Proposal to detail as required, furnish material, fabricate, deliver (F.O.B. Trucks jobsite) and/or erect structural and miscellaneous steel pursuant to the Terms and Conditions of this Proposal as follows. **Able Steel Fabricates and Erects per the latest AISC Fourteenth Edition:**

Scope of Work

- Please reference attached document "Scope" for list of inclusions and exclusions
- The parties agree that the work will be performed in accordance with the AISC Code of Standard Practice, which is incorporated in its entirety.
- All erection and/or shop drawings are included for Approval/Review.
- All Requests for Information (RFI's) will be forwarded by email.
- All RFI's will be uniquely numbered and will have a date for the expected answer clearly indicated. Any delay of the answer to an RFI may constitute a delay to the completion of our contract and/or have cost implications to our contract price.
- All communications between the General Contractor and fabricator that have bearing on the detailing of the project must be forwarded to Able Steel Fabricators at the earliest possible convenience.

Contract Bidding Documents

- Specification Sections: 05051, 05120
- Architectural Drawings: Per sheet index on G-2 dated 2/2022
- Structural Drawings: Per sheet index on G-2 dated 2/2022
- We acknowledge receipt of one addendum.

Pricing

- We propose to furnish the Membrane Facility & Strainers for a price of $225,624.00
- We propose to furnish the Chemical Facility for a price of $193,092.00
- We propose to furnish the Electrical Bldg. for a price of $36,467.00
- We propose to furnish the ACH Facility for a price of $71,773.00
- Add Alternate-Canopy & Bridge Crane at Membrane Facility ADD $198,378.00
- All taxes are Excluded

Bid Price Clarifications

- PRIME CONTRACT QUALIFICATIONS – IF BOUND TO THE QUALIFICATIONS OF THE PRIME CONTRACT WE REQUIRE THAT A COPY OF THE PRIME CONTRACT EXCLUDING PRICING BE ISSUED WITH OUR SUBCONTRACT FOR REVIEW.
- RETENTION – TEN PERCENT RETAINAGE UNTIL FIFTY PERCENT OF THE WORK HAS BEEN SATISFACTORILY COMPLETED, AT WHICH TIME REDUCTION IN RETAINAGE TO FIVE PERCENT AND FIFTY PERCENT OF THE FUNDS PREVIOUSLY RETAINED ARE RELEASED TO US WITHIN 30 DAYS. BALANCE OF ALL RETENTIONS DUE 30 DAYS AFTER SUBSTANTIAL COMPLETION OF ORIGINAL STRUCTURAL SCOPE.
- RAW MATERIAL PAYMENT – RAW MATERIALS PAID 100% WITHIN 30 DAYS OF RECEIPT IN ABLE'S YARD. – NO RETENTION.
- PAYMENT – INVOICES SHALL BE PRESENTED MONTHLY, PAYABLE WITHIN 30 DAYS OF DATE OF INVOICE.
- PROFESSIONAL LIABILITY / ERRORS AND OMISSIONS INSURANCE – UP TO $1,000,000.00 INSURED. ANY ADDITIONAL COVERAGE IN EXCESS WILL REQUIRE AN ADDITIONAL INCREASE TO OUR CONTRACT PRICE.
- EXCLUSION - GENERAL LIABILITY INSURANCE OVER $1,000,000.00 PER OCCURENCE, $2,000,000.00 AGGREGATE. AUTO $1,000,000.00. EXCESS UMBRELLA $9,000,000.00
- EXCLUSION - WORKMENS COMP. INSURANCE IN EXCESS OF STATUTORY LIMITS.
- EXCLUSION – ACCEPTANCE OF LIQUIDATED DAMAGES CLAUSES.

Specific Clarifications

- NOTE: ABLE STEEL FABRICATORS, INC. IS AN "APPROVED FABRICATOR" BY THE CITY OF PHOENIX (CERT. #C04-2001). ABLE STEEL IS ALSO "A.I.S.C. CERTIFIED 'Std".
- All beam to beam and beam to flange connections will be per our standard A.I.S.C. approved single clip connection unless specifically expressed.
- Joist calculations will be provided after return of E.O.R. approved shop drawing submittal.
- Steel fabricated in our shop will be painted per specifications. All other material will receive manufacturer's standard finish. No finish painting is included. No painting of fireproofed steel is included nor is field painting or touch-up unless specifically expressed.
- All items galvanized and requiring a painted finish are to be galvanized only. Prime or finish painting is by others unless specifically expressed herein.
- Railings called out to be 1-1/2" O.D. painted steel pipe shall be 1-1/4" standard pipe (1-5/8" Nominal O.D.)
- In the event of significant delay or price increase of material, equipment or energy occurring during the performance of the contract through no fault of the contractor, the contract sum, time of completion or contract requirements shall be equitably adjusted by change order in accordance with the procedures of the contract documents. A change in price of an item of material, equipment or energy will be considered significant when the price of an item increases ten percent between the date of this contract and the date of installation.

List of Standard Scope Exclusions

- Access doors, panels and hatches (roof & floor); Anchorage devices for other trades; Backup plates for other trades; Bolts nuts and washers, wood to wood, wood to masonry & concrete, wood to steel and steel through wood to steel; Brackets, hangers and frames for other trades; Catch basins, frames and covers; Chain-link fence, gates and posts; Cost of survey; Cutting of metal deck at openings; Cutting or drilling in field to accommodate other trades; Demolition or reworking of existing construction; Design Engineering & calculations; Dock bumpers, Door hardware and pressed frames; Downspouts, boots and gutters; Embedded steel in precast units; Expansion joints and covers; Extra Verticals at joist (angles for loads added in field by other trades); Field touch-up painting; Field welding of reinforcing steel to structural steel; Fireproofing (including scraping and replacement of same); Galvanizing; Grab bars; Grouting or dry packing; Hoisting for other trades; Special Inspection NDT testing and preparation for same (cost of) except in house quality control (Qual: Visual Inspection Only); Manufactured wood connectors and joist hangers such as Teco, Artcor, Simpson, etc.; Metal louvers; Miscellaneous steel items shown or implied on mechanical; electrical and plumbing drawings; Plate/sheet metal work 10 GA. or under; Reinforcing steel and smooth dowels; Removal and reinstallation of joist; cross or horizontal bridging which interferes with other trades; Removal of shear stud ferrules and sweeping of metal deck; Roof and floor hatches, Roof drains and sump pans; Safety cable removal and maintenance of after Able Steel has left site; Setting of level plates or nuts to elevation; Shoring; Small openings in metal deck; Stainless steel and other nonferrous metals; Stair nosing; Standing Seam metal deck; Thresholds; Unistrut; & Wire mesh panels or partitions

Terms and Conditions

- This quote is based upon receiving a standard A.I.A. document A401 for our Contractual Agreement.
- The parties agree that the work will be performed in accordance with the AISC Code of Standard Practice, which is incorporated in its entirety.
- A.I.S.C. Specifications will apply and prevail.
- If Able Steel Fabricators, Inc. is the successful bidder, we request the right to negotiate the method of payment
- All prices are valid within acceptance of 15 days after the date of this proposal. All prices are subject to change due to fluctuation in material or component prices. Any deviations after placement of order, such as changes in quantity, partial release or changes in specifications or drawings, are subject to a price increase and/ or additional freight charges.
- Price and delivery are based on and subject to mill availability.
- Any alteration or deviation from the specifications or contract involving additional cost will be executed upon written orders for same, unless otherwise agreed by both parties.
- This Proposal (Able Steel Fabricators, Inc. Quote No. 22RW022 will be made part of any future Contract or Purchase order resulting from this Quote.
- Buyer will remove, relocate or protect all existing utilities interfering with the erection of the structure or limiting the operation of the erection crane.
- If included, all lintels under 300 pounds, anchor bolts and steel embedded in concrete will be erected by others. If material is to be delivered only, unloading will be done by others.
- Clear, reasonable and adequate access throughout erection for cranes and delivery trucks adjacent to all areas of construction shall be provided by others.
- Anchor bolts for columns, weld plates and other field dimensions will be within industry standards for

line and grade.

- Contractor agrees to establish all levels and datum lines, elevations and openings. Survey by general contractor as required.
- This estimate is based on erecting Monday thru Friday (regular hours) excluding holidays and weekends.
- Seventy-two (72) hours' notice required prior to manning of jobsite.
- Contractor/Customer shall provide: Builders Risk Insurance against perils of fire; extended coverage and vandalism and have added Able Steel Fabricators, Inc., as insured “As their interest may appear” and furnish written notice in event of cancellation.
- It is understood that in the event of errors, nonconforming material/workmanship, or installation difficulties being experienced with items provided hereunder, we shall be properly notified in writing, given a reasonable time to inspect as to the validity of any alleged claim and a reasonable time to repair. In the absence of proper notice as described above, we will accept no responsibility for such claims.
- Warranty: Our liabilities shall be limited to replacement or repair of any material or workmanship as provided by Able Steel Fabricators, Inc. and found to be defective. This warranty applies for one (1) year after date of shipment from our plant.
- If Able Steel Fabricators, Inc. is summoned to the job site to defend its fabrication and fault is found to be with other than our fabrication, Able Steel Fabricators, Inc. will be reimbursed for its expenses and fees.

Roy Walker

(480) 663-6933

Estimator

Able Steel Fabricators, Inc.

Scope Inclusions / Exclusions:

1	INC	HSS Columns at Electrical Canopy	Furnish & Install	Sheet Ref:	S-1.03
3	INC	HSS Beams at Electrical Canopy	Furnish & Install	Sheet Ref:	S-1.03
4	INC	HSS Columns at Self Cleaning Strainers Canopy	Furnish & Install	Sheet Ref:	S-1.22
6	INC	HSS Beams at Self Cleaning Strainers Canopy	Furnish & Install	Sheet Ref:	S-1.22
7	INC	HSS Columns at Membrane Facility	Furnish & Install	Sheet Ref:	S-1.42
9	INC	WF Beams at Membrane Facility	Furnish & Install	Sheet Ref:	S-1.42
10	INC	HSS Beams at Membrane Facility	Furnish & Install	Sheet Ref:	S-1.42
12	INC	Beam Bearing Plate at Membrane Facility	Furnish & Install	Sheet Ref:	4/S-1.51
16	INC	WF Beams at Membrane Facility Canopy	Furnish & Install	Sheet Ref:	S-1.43
17	INC	Beam Bearing Plate at Membrane Facility Canopy	Furnish & Install	Sheet Ref:	S-1.43; 5/S-1.51
18	INC	WF Runway Beams at Membrane Facility	Furnish & Install	Sheet Ref:	S-1.43; 4/S-1.52
19	INC	Runway Beam Bearing Plate at Membrane Facility	Furnish & Install	Sheet Ref:	S-1.43; 54S-1.52
21	INC	HSS Columns at Chemical Storage	Furnish & Install	Sheet Ref:	S-2.00
23	INC	HSS Beams at Chemical Storage	Furnish & Install	Sheet Ref:	S-2.01
24	INC	HSS Columns at ACH Facility	Furnish & Install	Sheet Ref:	S-2.21
26	INC	HSS Beams at ACH Facility	Furnish & Install	Sheet Ref:	S-2.21
27	INC	3" PLN-24 20 Gage Galvanized Metal Deck at Electrical Canopy	Furnish & Install	Sheet Ref:	S-1.03
28	INC	3" PLN-24 20 Gage Galvanized Metal Deck at Self Cleaning Strainers	Furnish & Install	Sheet Ref:	S-1.22
29	INC	3" PLN-24 20 Gage Galvanized Metal Deck at Membrane Facility	Furnish & Install	Sheet Ref:	S-1.42
30	INC	3" PLN-24 20 Gage Galvanized Metal Deck at Chemical Storage	Furnish & Install	Sheet Ref:	S-2.01

Scope Inclusions / Exclusions:

31	INC	3" PLN-24 20 Gage Galvanized Metal Deck at ACH Facility	Furnish & Install	Sheet Ref:	S-2.21

Scope Inclusions / Exclusions:

2	INC	Column Anchor Bolts at Electrical Canopy	FOB	Sheet Ref:	S-1.03
5	INC	Column Anchor Bolts at Self Cieaning Strainers Canopy	FOB	Sheet Ref:	3/S-1.44
8	INC	Column Anchor Bolts at Membrane Facility	FOB	Sheet Ref:	6/S-1.45
11	INC	Embedded Beam Seat at Membrane Facility	FOB	Sheet Ref:	2,3/S-1.51
20	INC	Embedded Plate at Runway Beam at Membrane Facility	FOB	Sheet Ref:	S-1.43; 54S-1.52
22	INC	Column Anchor Bolts at Chemical Storage	FOB	Sheet Ref:	3,4/S-2.03
25	INC	Column Anchor Bolts at ACH Facility	FOB	Sheet Ref:	S-2.21; 5/S-15

3/24/2022 8:32:32AM | Chandler Reclaimed Water Facility, Chandler, Az | Job: 22RW022

Scope Inclusions / Exclusions:

200	EX	Pipe Supports	Excluded	Sheet Ref:	1,2,3,4/S-15
201	EX	Access Hatches	Excluded	Sheet Ref:	S-1.02
202	EX	Stairs and Rail	Excluded	Sheet Ref:	S-1.42
203	EX	Crane Rail and Connection	Excluded	Sheet Ref:	4/S1.52
204	EX	Handrail at Concrete Stairs and Ramp	Excluded	Sheet Ref:	S-1.81; 1/A-1.73
205	EX	Pre-Engineered Metal Bldg	Excluded	Sheet Ref:	S-1.81; S-1.91
206	EX	Shade Screens	Excluded	Sheet Ref:	S-2.01
207	EX	All Grating	Excluded	Sheet Ref:	
208	EX	All Stairs and Rails	Excluded	Sheet Ref:	
209	EX	All Guardrail	Excluded	Sheet Ref:	
210	EX	All Ladders	Excluded	Sheet Ref:	
211	EX	All Bollards	Excluded	Sheet Ref:	
212	EX	Cantilevered Sliding Gate	Excluded	Sheet Ref:	
213	EX	Standing Seam Metal Roof Panels	Excluded	Sheet Ref:	A-1.73
214	EX	Corrugated Metal Siding	Excluded	Sheet Ref:	A-1.74
215	EX	Touch Up Painting	Excluded	Sheet Ref:	
216	EX	OCIP	Excluded	Sheet Ref:	
217	EX	Textura	Excluded	Sheet Ref:	

BID PROPOSAL

Date 3/30/2022

Bid Proposal of * Revolution Industrial (hereinafter called "Bidder")

a **Partnership organized and existing under the laws of the State of

Arizona.

* Insert name of firm.
** Insert corporation, partnership, or individual, as applicable.

(INSERT OWNER'S ADDRESS)
TO: McCarthy Building Companies, Inc.
6225 North 24th Street, Suite 200
Phoenix, Arizona 85016

The Bidder, in compliance with your Invitation for Bids for the construction of Chandler Reclaimed Water Interconnect Facility having examined the Contract Documents entitled City of Chandler, Reclaimed Water Interconnect Facility Project, and other related documents and being familiar with the site of the proposed work, and with all of the conditions surrounding the construction of the proposed project including the availability of materials and labor, and the progress of work to date, if any, hereby proposes to furnish all labor, materials, tools, equipment, machinery, equipment rental, transportation, superintendence, perform all work, provide all services, and to construct all work in accordance with the Contract Documents set forth herein, and at the prices stated below. These prices are to cover all expenses incurred in performing the work required.

The Bidder shall attach a copy of Bidders' detailed estimate to its Bid Proposal. This estimate shall identify all quantities shown in the documents or anticipated along with corresponding labor, material and equipment pricing.

After Bid Proposals are received, tabulated, and evaluated by McCarthy, said Bidder agrees to meet with McCarthy for the purpose of determining any duplications, omissions, or mutually agreed bid adjustments. For these meetings, the Bidder agrees to provide a complete, detailed cost breakdown; a list of all sub-subcontractors proposed for use in the work; and a list of all items, materials and their manufacturers proposed for use in the work.

The Bidder, if awarded a Subcontract, agrees to commence work and to fully complete its Work in accordance with a schedule to be established in collaboration with McCarthy under the provisions of the Additional Subcontractor Conditions of the Specifications.

The Bidder acknowledges receipt of the following Addenda: Addendum 1 & 2

Associated documents per building connected and Misc. Metals Scope Deliniation

BASE BID:

The Bidder agrees to perform all Structural Steel (herein insert the title of the Work Category as it appears in the Additional Subcontractor Conditions) Work for Work Category No. 05, as described in the Contract Documents, for the Lump Sum of six hundred and sixty six thousand, five hundred and eighty four dollars DOLLARS ($663,584.00).

BID BREAKDOWN:

Mobilization / Submittal	14,105.00
Raw Water PS	$19,438.00
Membrane Facility/Strainer	$438,158.00
Chemical Facility	$175,925.00
Blower Building	$0.00
Electrical Building	$0.00
Chlorine Contact Basin	$15,958.00
Site Work	$0.00
Performance & Payment Bond Cost *(If Applicable)*	$7,433.00
Total Subcontract Amount	$671,017.00

The name of the proposed Bonding Company is Old Republic Surety Company

Bond rate 1.120 %

All applicable taxes, except sales and use taxes on materials and equipment which are affixed and made a part of the real estate of the Project, are included in the above Base Bid. Bidder agrees that this Bid Proposal shall be good and may not be withdrawn unless McCarthy does not send Bidder a Subcontract within one hundred eighty (180) calendar days after the opening date of Bid Proposals.

(Amounts shall be shown in both words and figures. In case of discrepancy, the amount shown in words will govern.)

ALTERNATES:

The Bidder further agrees that if any or all of the Alternates listed and described below are incorporated and accepted within sixty (60) calendar days after receipt of a Subcontract from McCarthy, the Bidder will adjust its Subcontract by the amount indicated opposite the Alternates listed below.

ALTERNATE NO. 1: Canopy and Bridge Crane @ Membrane Facility:

ADD the sum of $56,744.00.

CHANGE ORDER RATES: (Add separate sheet as needed)

Markup % (on rates and material): 15% mark up on material.

Position: Refer to attached rate sheet Rate: _____.

Equipment: Refer to attached rate sheet Rate: _____.

The Bidder understands that McCarthy reserves the right to reject any or all Bid Proposals and to waive any informalities or irregularities therein.

SELECT AS APPROPRIATE

☐ The Bidder has completed the Prequalification Form together with all other required data for McCarthy's' Contractor Default Insurance Program; OR

☐ The Bidder has not completed the Prequalification Form together with all other required data for McCarthy's' Contractor Default Insurance Program because the Bidder has provided the Form and all such information to McCarthy in the past 12 months for the following project:

Chandler WRF GMP 02 Project, which bid on: 4/22/2021.

RESPONSIVE BID REQUIREMENTS:

DO NOT ENCLOSE YOUR STANDARD TERMS AND CONDITIONS

If any exceptions are taken to the requirements of this Proposal form, attach a separate sheet listing those exceptions, stating the sections and paragraphs and the specific exception.	IKZ
In submitting this proposal, the Bidder certifies that this bid is valid for 180 calendar days. No	IKZ
Please see add alt for escalation - $3,568.00	
In submitting this Proposal as described herein, we agree to complete the work in accordance with the included Preliminary Construction Sequence.	IKZ
In submitting this Proposal, the Bidder certifies that all cost for extended warranties to start on the date of Substantial Completion is included.	IKZ
In submitting this proposal as described herein, we confirm that we have received, reviewed and agree to all commercial terms stated in the McCarthy Subcontract and Purchase Order Agreement. Any exception taken to the commercial terms stated in these Agreements must be listed on a separate sheet noting the article or paragraph and the specific exception. ***Bidders attached Standard Terms and Conditions will not be acknowledged or accepted as part of any given bid.***	IKZ
In submitting this proposal as described herein, the Bidder certifies that this bid is coordinated based on a complete set of documents and that there will be no claims for change order based on the assertion that the Bidder did not have a complete set of Bidding Documents.	IKZ
In submitting this proposal, the Bidder certifies that they have included all spare parts, training, O & M Manuals, shop drawings and administration costs as associated to comply with the requirements of the specifications and as listed for their scope of work.	IKZ
A bid will be considered non-responsive if the Subcontractor Pre-Qualification Form is not completed as part of the Bid Form **(or on file at McCarthy office)**.	IKZ
The Bidder, by submitting their bid, represents that they have read and understand the scope requirements of the Bidding Documents.	IKZ

The Bidder certifies that any proposed materials in this scope of work meet or exceeds the requirements stated in the specifications unless noted otherwise within this proposal.	IKZ
The bidder certifies that the price listed in this bid is a firm Price through the final delivery of the materials proposed herein, and that no material escalation will be accepted as part of this proposal.	IKZ

Within fifteen (10) days after receipt by the Bidder from McCarthy of the Subcontract or Purchase Order, the Bidder will execute and return to McCarthy said Subcontract or Purchase Order and if notified from McCarthy that Bidder is not to be enrolled in McCarthy's Contractor Default Insurance Program, deliver to McCarthy Performance and Labor and Material Payment Bonds for the Subcontract or a Supply Contract Bond for the Purchase Order, or the difference between the amount of the bid and such larger amount for which McCarthy may subcontract with another party to perform the work covered by said bid, together with all court costs, all attorney fees and all other expense of recovery, all of which shall not exceed the Bid Security attached in the amount of 15% of the bid, will become the property of McCarthy. The bonds shall name McCarthy as Obligee.

If an Individual:

Authorized Signature: _____

Name (print): _____

Email: _____

Business Address: _____

_____

If a Partnership:

Authorized Signature: _____

Name (print): Chris Nay

Email: Chris@RevolutionIndustrial.com

Authorized Signature: _____

Name (print): _____

Email: _____

Business Address: 5858 W Riggs Rd, Chandler, AZ 85226

_____

If a Corporation:

Authorized Signature: _____

Name (print): _____

Email: _____

Title: _____

Business Address: _____

_____

Telephone (480) 993-6699

Contractor License Number: 272318

General Liability Insurance Carrier (not the agent): Navigators Specialty Insurance Co

*Please attach a sample certificate of insurance and current W9 form to your bid.

08-19-2014 Rev.
Front Ends

BID BOND

KNOW ALL MEN BY THESE PRESENTS, that we Revolution Industrial, LLC (here insert full name and address or legal title of Contractor) as Principal, hereinafter called the Principal, and Old Republic Surety Company

(Here insert full name and address or legal title of Surety) a corporation duly organized under the laws of the State of WI as Surety, hereinafter called the Surety, are held and firmly bound unto McCARTHY, hereinafter called the Obligee, in the sum of Fifteen percent of the amount bid $671,017.00
Fifteen Percent of Amount Bid (15%)

DOLLARS ($ 15% of amount), for the payment of which sum well and truly to be made, the said Principal and the said Surety, bind ourselves, our heirs, executors, administrators, successors and assigns, jointly and severally, firmly by these presents.

WHEREAS, the Principal has submitted a bid for Work Category No. _____, for Chandler Reclaimed Water Interconnect Facility Project, 955 E. Queen Creek Road, Chandler, Arizona 85286 - Structural Steel

NOW, THEREFORE, if the Obligee shall accept the bid of the Principal and the Principal shall, within the specified period of time, enter into a formal contract and furnish a surety guaranteeing the full and faithful performance of the Work, all as provided in the Additional Subcontractor Conditions, Plans and Specifications and other Contract Documents, including addenda, of said Obligee, then this obligation shall become void; otherwise it shall remain in full force and effect.

In the event the Obligee determines the Principal has failed to comply with any requirement as set forth in the preceding paragraph, then the Principal and Surety shall be jointly and severally obligated to pay to the Obligee the difference, not to exceed the full penal sum set forth above, between the amount specified in the Principal's bid and such larger amount for which the Obligee may contract with another party to perform the work covered by said bid, together with all court costs, all attorney's fees and any other expense of recovery.

IN TESTIMONY WHEREOF, the said Principal and said Surety have caused this instrument to be signed by their respective officers and their corporate seals to be hereunto affixed this 29th day of March A.D. 2022.

Revolution Industrial, LLC
(Principal) (Seal)

(Witness)

(Title)

Old Republic Surety Company
(Surety) (Seal)

(Witness)

Melanie Ankeney, Attorney-In-Fact (Title)

OLD REPUBLIC SURETY COMPANY

POWER OF ATTORNEY

KNOW ALL MEN BY THESE PRESENTS: That OLD REPUBLIC SURETY COMPANY, a Wisconsin stock insurance corporation, does make, constitute and appoint:

David J. McKee, Joseph A. Clarken III, Jennifer Castillo, Melanie Ankeney,

Patrick R. Hedges, Chrystal Hedges of Phoenix, AZ

its true and lawful Attorney(s)-in-Fact, with full power and authority for and on behalf of the company as surety, to execute and deliver and affix the seal of the company thereto (if a seal is required), bonds, undertakings, recognizances or other written obligations in the nature thereof, ***(other than bail bonds, bank depository bonds, mortgage deficiency bonds, mortgage guaranty bonds, guarantees of installment paper and note guaranty bonds, self-insurance workers compensation bonds guaranteeing payment of benefits, asbestos abatement contract bonds, waste management bonds, hazardous waste remediation bonds or black lung bonds),*** as follows:

ALL WRITTEN INSTRUMENTS

and to bind OLD REPUBLIC SURETY COMPANY thereby, and all of the acts of said Attorneys-in-Fact, pursuant to these presents, are ratified and confirmed. This appointment is made under and by authority of the board of directors at a special meeting held on February 18, 1982.

This Power of Attorney is signed and sealed by facsimile under and by the authority of the following resolutions adopted by the board of directors of the OLD REPUBLIC SURETY COMPANY on February 18,1982.

RESOLVED that, the president, any vice-president or assistant vice president, in conjunction with the secretary or any assistant secretary, may appoint attorneys-in-fact or agents with authority as defined or limited in the instrument evidencing the appointment in each case, for and on behalf of the company to execute and deliver and affix the seal of the company to bonds, undertakings, recognizances, and suretyship obligations of all kinds; and said officers may remove any such attorney-in-fact or agent and revoke any Power of Attorney previously granted to such person.

RESOLVED FURTHER, that any bond, undertaking, recognizance, or suretyship obligation shall be valid and binding upon the Company

(i) when signed by the president, any vice president or assistant vice president, and attested and sealed (if a seal be required) by any secretary or assistant secretary; or

(ii) when signed by the president, any vice president or assistant vice president, secretary or assistant secretary, and countersigned and sealed (if a seal be required) by a duly authorized attorney-in-fact or agent; or

(iii) when duly executed and sealed (if a seal be required) by one or more attorneys-in-fact or agents pursuant to and within the limits of the authority evidenced by the Power of Attorney issued by the company to such person or persons.

RESOLVED FURTHER that the signature of any authorized officer and the seal of the company may be affixed by facsimile to any Power of Attorney or certification thereof authorizing the execution and delivery of any bond, undertaking, recognizance, or other suretyship obligations of the company; and such signature and seal when so used shall have the same force and effect as though manually affixed.

IN WITNESS WHEREOF, OLD REPUBLIC SURETY COMPANY has caused these presents to be signed by its proper officer, and its corporate seal to be affixed this 23rd day of March, 2020.

OLD REPUBLIC SURETY COMPANY

Karen J. Haffner
Assistant Secretary

OLD REPUBLIC SURETY COMPANY CORPORATE SEAL 1981

Alan Pavlic
President

STATE OF WISCONSIN, COUNTY OF WAUKESHA - SS

On this 23rd day of March, 2020, personally came before me, Alan Pavlic and Karen J Haffner, to me known to be the individuals and officers of the OLD REPUBLIC SURETY COMPANY who executed the above instrument, and they each acknowledged the execution of the same, and being by me duly sworn, did severally depose and say: that they are the said officers of the corporation aforesaid, and that the seal affixed to the above instrument is the seal of the corporation, and that said corporate seal and their signatures as such officers were duly affixed and subscribed to the said instrument by the authority of the board of directors of said corporation.

NOTARY PUBLIC STATE OF WISCONSIN

Kathryn R. Pearson
Notary Public

My Commission Expires: September 28, 2022

(Expiration of notary's commission does not invalidate this instrument)

CERTIFICATE

I, the undersigned, assistant secretary of the OLD REPUBLIC SURETY COMPANY, a Wisconsin corporation, CERTIFY that the foregoing and attached Power of Attorney remains in full force and has not been revoked; and furthermore, that the Resolutions of the board of directors set forth in the Power of Attorney, are now in force.

52 5542

OLD REPUBLIC SURETY COMPANY CORPORATE SEAL 1981

Signed and sealed at the City of Brookfield, WI this 29th day of March, 2022.

Karen J. Haffner
Assistant Secretary

ORSC 22262 (3-06)

Revolution INDUSTRIAL

5858 W. Riggs Rd. • Chandler, AZ 85226
P.O. Box 51420 • Phoenix, AZ 85076

www.revolutionindustrial.com

P: (480) 993-6699 • F: (480) 718-7656

Proposal #22-0227 – Structural Steel

Wednesday, March 30, 2022

Revolution Industrial is pleased to present our proposal for:

Client: McCarthy Building Companies

Client Contact: Nicole Azuri – Preconstruction Manager – Nazuri@mccarthy.com

Project: Chandler – Reclaimed Water Interconnect Facility

Project Address: 905 East Queen Creek Road

This scope of work includes: Fabrication and installation of structural steel per quantities and work areas below.

Structural Steel

- Pump Station
  - Electrical Canopy – 2,872 LBS - Primed
    - HSS – 6" x 6" x 1/4" - 4 count
    - HSS Beam - 10" x 5" x 3/8" (44 LF) – 2 count
    - HSS Beam - 6" x 5" x 1/4" (19 LF) – 2 count
    - 260 SF – PLN-24 G-60 Galv. Punch Lock
- Self-Cleaning Strainer
  - Cleaning Canopy – 6,830 LBS - Primed
    - HSS Beam - 7" x 5" x 1/4" (120 LF) – 8 count
    - HSS Beam - 10" x 5" x 3/8" (44.5LF) – 2 count
    - HSS Column – 6" x 6" x 1/4" - 6 count
    - 700 SF – PLN-24 G-60 Galv. Punch Lock
- Membrane Facility
  - Lower Canopy – 26,275 LBS - Primed
    - W 16x26 Beam – (400 LF) – 10 Count
    - W 27x84 Beam – (145.5 LF) – 2 count
    - W 12x14 Beam - (150 LF 0 - 18 count
    - 2980 SF – PLN-24 G-60 Galv. Punch Lock
  - Upper Canopy – 40,230 LBS - Primed
    - W 14x26 Beam (275 LF) – 10 count
    - W 12x14 Beams (72.17 LF) – 9 count
    - HSS Beam 14" x 6" ¼" – 4 count
    - W 24x68 Beams (72 LF) 1 count
    - HSS Column – 7" x 7" x 5/16" 4 count
    - 2080 SF – PLN-24 G-60 Galv. Punch Lock
    - Crane Runway Beams – add alts
      - W 21x93 – (122 LF) - 2 count
      - C 12x25 – (122 LF) – 2 count
  - Grating Walkway support beam – 4,502 LBS - Galvanized
    - W 8x18 Beams (186 LF) – 16 count
- Chlorine Contact Basin
  - Canopy (M-1.61) – 2,250 LBS - Primed
    - HSS – 6" x 6" x 1/4" - 4 count
    - HSS Beam - 10" x 5" x 3/8" (44 LF) – 2 count
    - HSS Beam - 6" x 5" x 1/4" (18 LF) – 2 count
    - 165 SF – PLN-24 G-60 Galv. Punch Lock

This proposal is the sole property of Revolution Industrial. The contents herein are strictly confidential and are supplied on the understanding that they will be held confidentially and not disclosed to third parties without the prior written consent of Revolution Industrial. (© 2015)

- MFS Chemical Area
  - ACH Canopy – 8,145 LBS - Primed
    - HSS Beam - 9" x 5" x 1/4" (60 LF) – 4 count
    - HSS Beam – 9" x 6" x ¼" (62 LF) – 4 count
    - HSS Column – 6" x 6" x 1/4" - 6 count
    - 500 SF – PLN-24 G-60 Galv. Punch Lock
  - Chemical Canopy – 24,675 LBS - Primed
    - HSS Beam - 6" x 5" x 3/8" (262 LF) – 16 count
    - HSS Beam – 10" x 5" 3/8" (144 LF) – 6 count
    - HSS Column – 6" x 6" x 2/4" - 14 count
    - 1225 SF – PLN-24 G-60 Galv. Punch Lock

Our price for this scope of work is as follows:

1. Lump Sum Price of - $663,584.00
   a. Mobilization - $14,105.00
   b. RAW Water PS (Pump Station) - $19,438.00
   c. Membrane Facility - $388,191.00
      i. Self-Cleaning Strainer - $49,967.00
   d. MFS Chemical Area - $175,925.00
   e. Chlorine Contact Basin - $15,958.00
2. Add Alternates
   a. Demo Chlorine Contact Basin Canopy (D-1.03) - $19,916.00
      i. Includes task-specific mobilization
      ii. Dismantle, package, and turn over to the owner for reuse.
   b. Crane Rail - $56,744.00
   c. Hold Bid for 180 Days - $39,207.00
   d. Re-detailing of submittals - $1,500.00 per set, per iteration.
   e. Field measuring - $3,000.00 per work area
   f. Performance Bond – $7,433.00
3. Taxes Excluded (Taxes to be added if tax exemption not provided)
   a. Estimated Tax value - $51,759.55

Clarifications: Quote valid for 10 days from the date of proposal

- **Safety**
  - All work is to be performed according to OSHA safety regulations.
  - Assumes 1 hour of on-site safety training
  - Assumes background checks and fingerprinting transferable from previous jobs. All new or additional are excluded.
  - All COVID precautions are per CDC guidelines. No site specifics have been considered and are excluded.
- **Production** – Labor off 5-day workweek at 10 hours a day.
- **Mobilization** –One for Structural and one for Misc. Metals
  - Assumes all work areas are open at the time of mobilization
- **Installation Duration –** 65 Days, 13 Workweeks
- **Coatings –** Noted in breakout
- **Lead times**
  - Submittals – 4 to 6 weeks from NTP and/or PO/Contract

This proposal is the sole property of Revolution Industrial. The contents herein are strictly confidential and are supplied on the understanding that they will be held confidentially and not disclosed to third parties without the prior written consent of Revolution Industrial. (© 2015)

- Long lead materials - Decking is a 16-to-20-week lead time. All steel members were quoted from local vendors and are readily available.
- Assumed start date on site – Q3 of 2022

- **Assumptions**
  - RI to have 6 weeks of notice prior to mobilization
  - Lift access to all areal work.
  - Crane access at canopies.
  - GC to provide all porta johns and dumpsters.
  - FAA permit by GC.
  - Detailing revisions per add alternate
- **Pre-Job Notification:**
  - Owner/Contractor needs to be aware that Revolution Industrial routinely files preliminary notices on projects solely to protect Revolution Industrial's rights in case of dispute or non-payment. This is done to fulfill state requirements allowing us to protect our legal rights.
  - Material procurement and mobilization will be bill 30% of contract value upon contract award.
  - Overhead and Profit: The owner/Contractor needs to be aware the Revolution Industrial has distributed overhead and profits evenly across all line items listed in the cost break out (attached). Please understand that if a line items or quantities are added or removed the price for the remaining line items will change.
  - Fabrication and/or erection sequencing agreed before mobilization. Deviation may result in a change order.
  - This proposal price is based on current material availability. Revolution Industrial cannot commit to a start date for the work until such time that a subcontract is executed, and we are given authority to release the material order. Upon release of the material order, Revolution Industrial will provide projected lead times for delivery. Upon receipt of this information Revolution, Industrial will be in a position to establish a projected schedule for commencement of fabrication or install of the material.
  - This proposal price is based on current labor availability. The availability of Revolution Industrial's labor pool changes on a regular basis due to ongoing or future projects, COVID-19 impacts, including new restrictions, and other government action which incentives workers not to return to the workforce. Revolution Industrial cannot commit to a start date for the work until a firm delivery date is known for the material or equipment to be installed. When a firm delivery date is known, Revolution Industrial will evaluate its then-current labor pool and provide a projected start date for the work.

- **Acknowledges – receipt and review of**
  - **General Documents**
    - Addenda 1
      - Addendum 1
      - 2022.02.28 Addendum No. 1
      - 2022.02.28 RWIF Agency Review Drawings
      - 2022.02.28 RWIF Agency Review Specifications
      - 4817 Chandler RWIF GMP2 - Front Ends Final
    - Addenda 2
      - Addendum 2
      - Bid Form 3-15-22
      - QA 4 -09714 - Metal Faced Acoustical Panels (DRAFT)
      - QA 22 Drwg
      - QA 25 – ATTACHEMENT
      - QA 37 – ATTACHEMENT

This proposal is the sole property of Revolution Industrial. The contents herein are strictly confidential and are supplied on the understanding that they will be held confidentially and not disclosed to third parties without the prior written consent of Revolution Industrial. (© 2015)

- QA 39 – ATTACHEMENT
- Question _ Answer Log - 90_ Documents
- RFI 32 - Marked up Drawings
- RFI 33 and 34 - Marked up Drawing

- Misc. Metals Scope Delineation

- **Plan Set**
  - 2022.02.28 RWIF Agency Review Drawings
- **Specifications**
  - 2022.02.28 RWIF Agency Review Specifications

Exclusions:

1. Any items not identified or sized or details not shown or details shown but not cut on the drawings
2. Any items shown or called for on civil, mechanical, plumbing, electrical, or landscape drawings
3. Miscellaneous steel not specifically called out
4. Permits.
5. Sales, use, and gross receipts taxes
6. Cost of bonds or special insurance
7. Demolition and/or removal of existing material.
8. Cost of inspection and testing.
9. Participating in liquidated damages and delays charges of any kind.
10. Prevailing Wage
11. All concrete work, grout & placing of same, core drilling, etc.
12. Concrete inserts, rebar, mesh, etc.
13. Opening frames or mechanical supports (except where specifically shown on structural drawings)
14. Burglar bars @ opening frames.
15. Stair nosings, metal sash and/or mullions
16. Wrought iron fence and gates Chain link fence and gates. Signage post and post sleeves
17. Ornamental metals (aluminum, brass, bronze, glass rail, wrought iron &, etc.)
18. Field welding other than detailed by RI erection drawings
19. Any and all steel associated precast concrete
20. All items embedded in precast concrete
21. Metal studs, tracks, bridging & accessories
22. Sheet metal 10 gauge & lighter, Glass stops
23. Wire mesh partitions & accessories
24. Expansion joint covers
25. Unistrut
26. Back up bars for other trades
27. Pipe sleeves for other trades
28. Anchor bolts for other trades
29. Masonry anchors or ties
30. Bolts other than steel to steel & steel to concrete or masonry
31. Seam welding of metal deck
32. Flashing, gutters, and downspouts
33. Sump pans
34. Cutting of deck at mechanical openings
35. Shoring of any kind
36. All wood products and materials included but not limited to Glulam, Simpson products, hardware and panelized
37. Panelized wooden roof system and all accessories

This proposal is the sole property of Revolution Industrial. The contents herein are strictly confidential and are supplied on the understanding that they will be held confidentially and not disclosed to third parties without the prior written consent of Revolution Industrial. (© 2015)

38. Field measuring and surveying.
39. Finish painting.
40. Any field painting including touch-up of structural, miscellaneous & metal decking
41. All structural calculations and engineering costs. Less stairs at Membrane Facility
42. Any item not specifically included in this proposal.

Sincerely,

Jarrod Goodman – Pre-Construction Manager
C: 623.980.4180
jarrod@revolutionindustrial.com

Isaac Zornes - Estimator
C:602.245.2008
Izornes@revolutionindustrial.com

This proposal is the sole property of Revolution Industrial. The contents herein are strictly confidential and are supplied on the understanding that they will be held confidentially and not disclosed to third parties without the prior written consent of Revolution Industrial. (© 2015)

2022 Revolution Industrial Rate Sheet

Piping	
Pipe-Superintendent	$97.68
Pipe-General Foreman	$87.32
Pipe-Foreman	$82.88
Pipe-Combo Welder	$78.44
Pipe-Fitter Helper	$68.08
Pipe-Journeyman Fitter	$75.48
Pipe-Travel	$57.72
Structural Steel	
Structural-Superintendent	$97.68
Structural-Lead/Foreman	$82.88
Structural-Journeyman Rigger	$78.44
Structural-Helper	$69.56
Structural-Journeyman Ironworker	$75.48
Structural-Travel	$57.72
Tankies	
Tank-Superintendent	$97.68
Tank-Rigger/Fitter	$78.44
Tank-Helper	$68.08
Tank-Welder	$76.96
Tank-Travel	$57.72
Mechanics/Millwrights	
Mechanic -Superintendent	$97.68
Mechanic-Mechanic	$75.48
Mechanic -Lead/Foreman	$82.88
Mechanic -Journeyman	$75.48
Mechanic -Travel	$62.16
Electrical	
Electrical-Superintendent	$97.31
Electrical-Lead/Foreman	$84.73
Electrical-Journeyman	$75.11
Electrical-Apprentice	$60.31
Electrical-Travel	$57.35
Electrical-Quality Control	$81.03
Coatings Field	
Coatings Field-Superintendent	$94.72
Coatings Field-Lead/Foreman	$87.32
Coatings Field-Journeyman	$81.40
Coatings Field-Apprentice	$74.00
Coatings Shop-Travel	$68.08
Underground Utilities	
Civil-Superintendent	$108.04
Civil-Foreman/Lead	$87.32
Civil-Pipe Layer	$84.36
Civil-Operator	$81.40
Civil-Laborer	$59.20
Civil-Skilled Laborer	$65.12
Civil-Travel	$57.72

Fabrication	
Shop-Plant Manager	$105.08
Shop-Lead/Foreman	$82.88
Shop-Fabricator	$79.92
Shop-Welder	$75.48
Shop-Apprentice	$66.60
Shop-Quality Control	$82.88
Shop Coatings	
Coatings Shop-Lead/Foreman	$85.84
Coatings Shop-Journeyman-Kone	$41.44
Coatings Shop-Journeyman	$81.40
Coatings Shop-Apprentice	$74.00
Coatings-Quality Control	$78.44
Site Warehouse	
Warehouse Coordinator	$90.28
Warehouse/Material Manager	$82.88
Scaffolding/Insulation	
Scaffold/Insulator-Superintendent	$87.32
Scaffold/Insulator-Lead/Foreman	$78.44
Scaffold/Insulator-Journeyman	$71.78
Scaffold/Insulator-Travel	$57.72
Site Indirects/Management	
Project Manager	$97.68
Project Manager - Senior	$105.08
Project Engineer	$90.28
Field Engineer	$82.88
Project Manager - PreCon	$90.28
Senior Estimator	$82.88
Estimator II	$75.48
Estimator I	$68.08
Survey Party Chief	$90.28
Survey Helper	$68.08
Quality Control - Manager	$90.28
Field-Quality Control	$82.88
Modeler	$78.44
Scheduler	$75.48
Project Administrator	$72.52
Safety Manager	$87.32
Safety Representative	$75.48

- **Overtime rates are calculated by multiplying the rate by 1.42. Overtime is any work over 8 hours per day.**
- **Double time rates are calculated by multiplying the rate by 1.7.**
- **Weekends are all overtime.**
- **Emergencies will be a 4 hour minimum plus drive time.**
- **All rates include safety and general consumable items**
- **Other materials will be marked up cost plus 15%**
- **Per Diem Rates for all classifications ($110.00)**
- **All fuel and delivery cost to be marked up cost plus 15%**

Rev. 3/8/22

Project Name: Chandler Reclaimed Water Interconnect Facility
Project No. WW1901.402

Work Category: **05B - Misc. Metals**

Date: 4/12/2022 Rev 6/1/2022

Recommended

	COMPANY INFORMATION	Revolution Industrial	Blue Dot Steel	Gray Wolf	SH Engineering	Caliente Ironworks
		Issac Zornes	Erin Rios	David Butler	Andy Skiles	Mark Coffey
		(602) 245-2008	(480) 894-0760	(480) 718-2552	(520) 494-2900	(602) 770-0257
		izornes@revolutionindustrial.com	erin@bluedotsteel.com	david.butler@graywolf.com	andy@shengmfg.com	m.coffey@msn.com
	TOTAL WORK CATEGORY PACKAGE VALUE	**$389,108**	**DECLINED**	**DECLINED**	**DECLINED**	**DECLINED**
	MCCARTHY SUBCONTRACT & FRONT END TERMS					
1	Compliant with McCarthy Front Ends	Yes				
2	Bid Submitted on McCarthy Bid Form	Yes				
3	Bid Bond Included with Bid (if over $500k Sub/$1 Mil Supplier)	Yes				
4	Surety Company	Old Republic				
5	Surety AM Best Rating (Must be A- or Better)	Yes				
6	AM Best Financial Size X($500M to $750M) or higher	Yes				
7	Anticipated contract amount is less than the Federal UW Limit as listed on the Treasury Listing	Yes				
8	Bond/CDI Cost	1.295%				
9	Included Insurance Requirements (Per Matrix)	Yes				
10	GL Insurance Company Name	Crest Insurance				
11	GL Insurance Carrier AM Best Rating (Must be A- or Better)	Yes				
12	PRL Insurance (If required by the Front Ends)	Yes				
13	Pollution Insurance (If required by the Front Ends)	n/a				
14	Tier 1 Approved	Yes				
15	Tier 2 Approved	No				
16	Safety Items:					
17	OSHA Recordable Incident Rate (Current)	0				
18	Agrees to comply with PPE requirements including 100% glove policy	Yes				
19	Acknowledges updated ladder policy (platform ladders)	Yes				
20	Task Hazard Analysis included for all tasks	Yes				
21	Tie-off above 6' required	Yes				
22	Includes Hoisting for Sub's Own Work Scope	Yes				
23	Acknowledges Soils Report	n/a				
24	Acknowledges Addenda	Yes				
25	Hold Bid for 180 Days	No				
26	Pricing good for the duration of the project	No				
27	Sales Tax Included	No				
28	**Market Questions**					
29	Have you experienced and/or do you anticipate any issues with existing suppliers or vendors?	Aluminum supply has been affected				
30	Do you have any overseas suppliers that may be impeding your supply chain?	No				
31						
32	Per Plans & Specifications	Yes				
33	Division 1 as it relates to this scope of work	Yes				
34	01010 - Summary of Work	Yes				
35	01300 - Submittals	Yes				
36	01640 - Materials and Equipment	Yes				
37	03600 - Grout	Yes				
38	05051 - Anchor Bolts, Toggle Bolts, and Concrete Inserts	Yes				
39	05500 - Metal Fabrications	Yes				
40	05510 - Metal Stairs	Yes				
41	05521 - Aluminum Handrail	Yes				
42	05530 - Aluminum Grating	Yes				

Project Name: Chandler Reclaimed Water Interconnect Facility
Project No. WW1901.402

Work Category: **05B - Misc. Metals**

Date: 4/12/2022 Rev 6/1/2022

Recommended

	COMPANY INFORMATION	Revolution Industrial	Blue Dot Steel	Gray Wolf	SH Engineering	Caliente Ironworks
		Issac Zornes	Erin Rios	David Butler	Andy Skiles	Mark Coffey
		(602) 245-2008	(480) 894-0760	(480) 718-2552	(520) 494-2900	(602) 770-0257
		izornes@revolutionindustrial.com	erin@bluedotsteel.com	david.butler@graywolf.com	andy@shengmfg.com	m.coffey@msn.com
	TOTAL WORK CATEGORY PACKAGE VALUE	**$389,108**	**DECLINED**	**DECLINED**	**DECLINED**	**DECLINED**
43	05532 - Aluminum Checkered Plate	Yes				
44	09900 - Painting	Yes				
Scope of Work						
Base Bid:		$357,818				
45	Provide all labor, materials, tools, equipment and appurtenances as required to perform the Work Category 05B - Misc. Metals, in accordance with and reasonably inferable from the Contract Documents, complete and without exception unless otherwise noted below, including, but not limited to the following:	Yes				
46	Check to Spec completed and submitted to McCarthy	Yes				
47	Bid Held for how many days	10 days				
48	***Escalation Moved F2 Esclation Allowance (Not Calculated in Total WC)***	$3,568				
49	Mobilizations	$2000/EA				
50	Additional Mobs (base cost only includes 1)	$10,000				
51	Field measuring as required	$15,000				
52	Raw water pump station access hatches	Yes				
53	Blower building exterior handrail	Yes				
54	Membrane facility stairs, railing, ladders, and grating	Yes				
55	Removal and reinstallation of access hatch at chlorine contact basin	$1,315				
56	Chemical storage area - aluminum railings and install only of FRP grating	Yes				
57	Bollards - Material only	Yes				
58	Provide all necessary steel angle, clips, and anchor bolts for all grating and access hatches	Yes				
59	Provide structural and anchorage calculation sealed by a registered structural engineer in the state of Arizona	Yes				
60	Installation of FRP grating at chemical storage	Yes				
61	Procurement of FRP materials	WC 06A				
62	McCarthy self perform complete installation labor cost	n/a				
63	All metallic surfaces (including pipe, supports, and enclosure) shall be primed per the requirements of the 09900 - Painting	Yes				
64	Shipping shall be FOB jobsite	Yes				
65	Unloading & storage	Yes				
66	Temporary protection & enclosure	Yes				
67	COVID-19 Scope Items					
68	Proposal includes CDC, Federal, State and Local OSHA guidelines for COVID-19.	Yes				
69	Your proposal shall include all productivity, schedule, and other impacts to cost and schedule.	No				
70	All personnel onsite must maintain 6'0" spacing between personnel and shall have facemasks on at all times that align with CDC, Federal, State or Local OSHA guidelines for COVID-19.	Yes				
71	Any personnel reporting symptoms must be immediately reported to McCarthy and follow the appropriate testing and quarantine protocols.	Yes				
72						
73	End of Scope					
	Bond/CDI Cost	$4,975				
	TOTAL WORK CATEGORY PACKAGE VALUE	**$389,108**				

Project Name: Chandler Reclaimed Water Interconnect Facility
Project No. WW1901.402

Work Category: **05C - Cantilevered Sliding Gate**

Date: 4/12/2022 Rev 6/1/2022

Recommended

	COMPANY INFORMATION	**Biddle & Brown**	Automatic Gate Systems	Hurricane Fence Co.	Susie's Custom Fence	Phoenix Fence
		Courtney Forsgren	Sheryl Campanella	Geoff Seymore	Lance Kuhler	Gary Testa
		(602) 456-8999	(602) 267-7778	(602) 484-9005	(602) 617-3300	(602) 276-4283
		courtney@bbfco.com	sheryl@automaticgatesystems.com	gseymore@hurricanefenceco.com	lance@susiefence.com	gtesta@phoenixfence.com
	TOTAL WORK CATEGORY PACKAGE VALUE	**$55,989**	**$58,265**	**$72,859**	**DECLINED**	**DECLINED**
	MCCARTHY SUBCONTRACT & FRONT END TERMS					
1	Compliant with McCarthy Front Ends	Yes	No	Yes		
2	Bid Submitted on McCarthy Bid Form	Yes	No	Yes		
3	Bid Bond Included with Bid (if over $500k Sub/$1 Mil Supplier)	n/a	n/a	n/a		
4	Surety Company	n/a	n/a	Travelers		
5	Surety AM Best Rating (Must be A- or Better)	n/a	n/a	Yes		
6	AM Best Financial Size X($500M to $750M) or higher	n/a	n/a	Yes		
7	Anticipated contract amount is less than the Federal UW Limit as listed on the Treasury Listing	No	No	No		
8	Bond/CDI Cost	1.295%	1.295%	1.295%		
9	Included Insurance Requirements (Per Matrix)					
10	GL Insurance Company Name	Selective Way Insurance	n/a	Pending		
11	GL Insurance Carrier AM Best Rating (Must be A- or Better)	Yes	n/a	Pending		
12	PRL Insurance (If required by the Front Ends)	n/a	n/a	n/a		
13	Pollution Insurance (If required by the Front Ends)	n/a	n/a	n/a		
14	Tier 1 Approved	Pending	Pending	Pending		
15	Tier 2 Approved	No	No	No		
16	Safety Items:					
17	OSHA Recordable Incident Rate (Current)	0	0	0		
18	Agrees to comply with PPE requirements including 100% glove policy	Yes	Yes	Yes		
19	Acknowledges updated ladder policy (platform ladders)	Yes	Yes	Yes		
20	Task Hazard Analysis included for all tasks	Yes	Yes	Yes		
21	Tie-off above 6' required	Yes	Yes	Yes		
22	Includes Hoisting for Sub's Own Work Scope	Yes	Yes	Yes		
23	Acknowledges Soils Report	n/a	n/a	n/a		
24	Acknowledges Addenda	Yes	Yes	Yes		
25	Hold Bid for 180 Days	Yes	No	No		
26	Pricing good for the duration of the project	Yes	No	No		
27	Sales Tax Included	No	No	No		
28	**Market Questions**					
29	Have you experienced and/or do you anticipate any issues with existing suppliers or vendors?	No	No	No		
30	Do you have any overseas suppliers that may be impeding your supply chain?	No	No	No		
31						
32	Per Plans & Specifications	Yes	Yes	Yes		
33	Division 1 as it relates to this scope of work	Yes	Yes	Yes		
34	01010 - Summary of Work	Yes	Yes	Yes		
35	01300 - Submittals	Yes	Yes	Yes		
36	01640 - Materials and Equipment	Yes	Yes	Yes		
37	05051 - Anchor Bolts, Toggle Bolts, and Concrete Inserts	Yes	Yes	Yes		
38	05500 - Metal Fabrications	Yes	Yes	Yes		
39	05502 - Cantilevered Sliding Gate	Yes	Yes	Yes		
40	09900 - Painting	Yes	Yes	Yes		
41	13128 - Gate Operator	Yes	Yes	Yes		

Project Name: Chandler Reclaimed Water Interconnect Facility
Project No. WW1901.402

Work Category: **05C - Cantilevered Sliding Gate**

Date: 4/12/2022 Rev 6/1/2022

Recommended

	COMPANY INFORMATION	**Biddle & Brown**	Automatic Gate Systems	Hurricane Fence Co.	Susie's Custom Fence	Phoenix Fence
		Courtney Forsgren	Sheryl Campanella	Geoff Seymore	Lance Kuhler	Gary Testa
		(602) 456-8999	(602) 267-7778	(602) 484-9005	(602) 617-3300	(602) 276-4283
		courtney@bbfco.com	sheryl@automaticgatesystems.com	gseymore@hurricanefenceco.com	lance@susiefence.com	gtesta@phoenixfence.com
	TOTAL WORK CATEGORY PACKAGE VALUE	**$55,989**	**$58,265**	**$72,859**	**DECLINED**	**DECLINED**
	Scope of Work					
	Base Bid:	$55,273	$25,720	$56,428	$0	$0
42	Provide all labor, materials, tools, equipment and appurtenances as required to perform the Work Category 05C - Cantilevered Sliding Gate, in accordance with and reasonably inferable from the Contract Documents, complete and without exception unless otherwise noted below, including, but not limited to the following:	Yes	Yes	Yes		
43	Check to Spec completed and submitted to McCarthy	Yes	Yes	Yes		
44	Bid Held for how many days	Yes	30 days	60 days		
45	Cost Adder to hold to 180 days	n/a	$10,000.00	$15,000		
46	Remote access control for administration desk	Yes	Yes	Yes		
47	1.5 horsepower motor slide gate operator	Yes	Yes	Yes		
48	Free exit and reversing technology	Yes	Yes	Yes		
49	14' custom sliding cantilevered gate and 5'4" frame ballast per drawings with installation	Yes	36'6"?	Yes		
50	Heavy duty sealed bearing wheels	Yes	Yes	Yes		
51	Fire department Knox switches	Yes	Yes	$500		
52	Two year warranty	Yes	Yes	Yes		
53	HY-Security Slide Drive 222 E ST Operator	Yes	$11,800.00	Yes		
54	Provide all anchors and epoxy required for the installation of fence	Yes	Yes	Yes		
55	All metallic surfaces (including pipe, supports, and enclosure) shall be primed and powder coated per the requirements of the 09900 - Painting	Yes	$10,000.00	Yes		
56	Shipping shall be FOB jobsite	Yes	Yes	Yes		
57	COVID-19 Scope Items					
58	Proposal includes CDC, Federal, State and Local OSHA guidelines for COVID-19.	Yes	Yes	Yes		
59	Your proposal shall include all productivity, schedule, and other impacts to cost and schedule.	Yes	Yes	Yes		
60	All personnel onsite must maintain 6'0" spacing between personnel and shall have facemasks on at all times that align with CDC, Federal, State or Local OSHA guidelines for COVID-19.	Yes	Yes	Yes		
61	Any personnel reporting symptoms must be immediately reported to McCarthy and follow the appropriate testing and quarantine protocols.	Yes	Yes	Yes		
62						
63	End of Scope					
	Bond/CDI Cost	$716	$745	$931		
	TOTAL WORK CATEGORY PACKAGE VALUE	**$55,989**	**$58,265**	**$72,859**		

AUTOMATIC GATE SYSTEMS, INC.

ROC #
CR05-093618
CR24-139472

□□□ S□□□rd Street □ Phoe□□□□r□o□□ □□□□□ □ □□□□□□□□□□□□□ □ □□□ □□□□□□□□□□□□

PROPOSAL/CONTRACT

NO: 031822TC:CHANDLERRECLAIM

DATE: MARCH 18, 2022

JOB: CHANDLER RELCAIM: 6225 N. 24TH STREET, CHANDLER

TO: AUSTIN HANCOCK 480.636.4181 AHANCOCK@MCCARTHY.COM
MCCARTHY BUILDERS

ELECTRONIC ORNAMENTAL IRON GATE ACCESS CONTROL SYSTEM

1 -DOORKING MODEL 1802EPD TELEPHONE ENTRY ACCESS CONTROL SYSTEM WITH KEYPAD MOUNTED ON DOUBLE GOOSENECK

1 -LIFTMASTER HDSL24UL COMMERCIAL SLIDE GATE OPERATOR WITH 1.5 HORSEPOWER MOTOR AND BATTERY BACK UP AND PHOTO BEAM PER UL325 REGULATIONS (MINIMUM 2 ENTRAPMENT PROTECTION DEVICES)

2 -RENO DIGITAL LOOP DETECTORS WITH TWO SAWCUT LOOP HARNESSES (FREE EXIT AND REVERSING)

1 -36’ X 6’ CUSTOM ORNAMENTAL IRON SINGLE SLIDE CANTALEVER GATE AS PER AGS APPROVED PLANS AND SPECIFICATION AND HEAVY DUTY SEALED BEARING WHEELS, ELECTROSTATIC PRIMED

1 -FIRE DEPARTMENT KNOX SWITCHES

1 -TOMAR SINGLE PRE-EMPTION STROBE DEVICES

TOTAL: $ 25,720.00**
PLUS APPLICABLE TAX

ALTERNATE: GATE OPERATOR

1 -HY-SECUIRTY SLIDE DRIVER 222 E ST IN LIEU OF ABOVE LIFTMASTER

ADD TO TOTAL: $ 11,800.00_____INTL.

PRICE INCLUDES:

-INSTALLATION OF THE ABOVE LISTED EQUIPMENT

-TRAINING AND FAMILIARIZATION

- COORDINATION WITH RELATED TRADES

-TWO YEAR WARRANTY ON PARTS, ONE YEAR ON LABOR

CHANDLER RELCAIM/MCCARTHY CONTINUED…AUTOMATIC GATE SYSTEMS, INC.

PRICE EXCLUDES:

-ALL NECESSARY PERMITS AND FEES

-110 VAC TO OPERATORS AND TOUCH TONE PHONE LINE TO CALLING UNIT

-CONCRETE PAD, FOOTINGS AND TRACK

*** PROGRAMMABLE REMOTES AVAILABLE @ 25.50 EACH (ONE TIME PURCHASE PRICE)

**NOTE: PRICE BASED ON CITY APPROVAL, FINAL GATE CONFIGURATION AND DESIGN AS AGREED ON BY THE BUYER AND SELLER

DUE TO THE UNSTABLE INDUSTRY PRICE SUBJECT TO CHANGE AND BASED UPON AVAILABILITY

TERMS: 50% DUE UPON APPROVAL, BALANCE UPON COMPLETION

ACCEPTANCE OF PROPOSAL/CONTRACT: When accepted by both buyer and seller as evidenced by their signature below, this proposal becomes a contract to be construed under Arizona law as per the terms of the proposal above, general conditions/exclusions, and the conditions on the reverse side.

Proposed by: **Accepted by:**

_____ _____

TONY CAMPANELLA 03.18.22

Signature **Date** **Signature** **Date**

BID PROPOSAL

P O O
PHO
O C
www hurr c e e ceco co
WO & WOSB CERTIFIED

COMM RC DUSTR CH OR M T RO T UTOM T O

CUSTOM R **MCCARTHY CONSTRUCTION**	TT **AUSTIN HANCOCK**	D T **3/25/22**
M h coc cc rth co	PHO: **480.536.5168**	
PROJ CT **COC RECLAIMED WATER INTERCONNECT FACILITY**		
PROJ CT DDR SS		
C T **CHANDLER**	ST T **AZ**	P **85286**

HURRICANE FENCE AGREES TO PROVIDE THE FOLLOWING:

BASE BID - $56,428.00

ST C T R T W TH POWD RCO T SH
H S CUR T S D DR R T OP R TOR
OOPS D D T CTORS
PHOTO THRU M
TR SM TT R R MOT S

NOTES AND CLARIFICATIONS:

SPO S TO STOC P D O S T O R MO
CO DU T POW R D D T TO SUPP D OTH RS H C TO COORD T OC T O S
P D D SP R CC SS PO T TO OTH RS
R SW TCH O O TO SUPP D OTH RS ST D H C
P D ST TO OTH RS

ADDENDUM NOTED:

EXCLUSIONS:

R D ST P RM TS SUR CO CR T OTH R TH POST OOT S COR DR R MO O
SPO S OR T T O O DS O O S H RDW R OTH R TH T H S S CUR T C R C S
DSC P D M OR R P RS CTR C S DUST CO TRO C MU T P MO T O S
ROU D D RR D SU M TT S D T D D S S R D CO DU TS

CERTIFIED WO & WOSB BUSINESS

PLEASE CALL WITH ANY QUESTIONS,

O S MOR
se ore hurr c e e ceco co

BID PROPOSAL

Date 3-25-22

Bid Proposal of * HURRICANE FENCE CO (hereinafter called "Bidder")

a ** CORPORATION organized and existing under the laws of the State of

ARIZONA.

* Insert name of firm.
** Insert corporation, partnership, or individual, as applicable.

(INSERT OWNER'S ADDRESS)
TO: McCarthy Building Companies, Inc.
6225 North 24th Street, Suite 200
Phoenix, Arizona 85016

The Bidder, in compliance with your Invitation for Bids for the construction of Chandler Reclaimed Water Interconnect Facility having examined the Contract Documents entitled City of Chandler, Reclaimed Water Interconnect Facility Project, and other related documents and being familiar with the site of the proposed work, and with all of the conditions surrounding the construction of the proposed project including the availability of materials and labor, and the progress of work to date, if any, hereby proposes to furnish all labor, materials, tools, equipment, machinery, equipment rental, transportation, superintendence, perform all work, provide all services, and to construct all work in accordance with the Contract Documents set forth herein, and at the prices stated below. These prices are to cover all expenses incurred in performing the work required.

The Bidder shall attach a copy of Bidders' detailed estimate to its Bid Proposal. This estimate shall identify all quantities shown in the documents or anticipated along with corresponding labor, material and equipment pricing.

After Bid Proposals are received, tabulated, and evaluated by McCarthy, said Bidder agrees to meet with McCarthy for the purpose of determining any duplications, omissions, or mutually agreed bid adjustments. For these meetings, the Bidder agrees to provide a complete, detailed cost breakdown; a list of all sub-subcontractors proposed for use in the work; and a list of all items, materials and their manufacturers proposed for use in the work.

The Bidder, if awarded a Subcontract, agrees to commence work and to fully complete its Work in accordance with a schedule to be established in collaboration with McCarthy under the provisions of the Additional Subcontractor Conditions of the Specifications.

The Bidder acknowledges receipt of the following Addenda: 1-2

.

BASE BID:

The Bidder agrees to perform all GATE AND OPERATOR (herein insert the title of the Work Category as it appears in the Additional Subcontractor Conditions) Work for Work Category No. _____, as described in the Contract Documents, for the Lump Sum of FIFTY SIX THOUSAND, FOUR HUNDRED TWENTY EIGHT DOLLARS ($56,428.00).

BID BREAKDOWN:

Raw Water PS	$_____
Membrane Facility/Strainer	$_____
Chemical Facility	$_____
Blower Building	$_____
Electrical Building	$_____
Chlorine Contact Basin	$_____
Site Work	$56,428.00
Performance & Payment Bond Cost *(If Applicable)*	$1,410.70
Total Subcontract Amount	$57,838.70

The name of the proposed Bonding Company is _____

Bond rate 2.5 %

All applicable taxes, except sales and use taxes on materials and equipment which are affixed and made a part of the real estate of the Project, are included in the above Base Bid. Bidder agrees that this Bid Proposal shall be good and may not be withdrawn unless McCarthy does not send Bidder a Subcontract within one hundred eighty (180) calendar days after the opening date of Bid Proposals.

(Amounts shall be shown in both words and figures. In case of discrepancy, the amount shown in words will govern.)

ALTERNATES:

The Bidder further agrees that if any or all of the Alternates listed and described below are incorporated and accepted within sixty (60) calendar days after receipt of a Subcontract from McCarthy, the Bidder will adjust its Subcontract by the amount indicated opposite the Alternates listed below.

ALTERNATE NO. 1: Canopy and Bridge Crane @ Membrane Facility:

ADD the sum of $_____.

CHANGE ORDER RATES: (Add separate sheet as needed)

Markup % (on rates and material): 15%.

Position: _____ Rate: _____.

Equipment: _____ Rate: _____.

The Bidder understands that McCarthy reserves the right to reject any or all Bid Proposals and to waive any informalities or irregularities therein.

SELECT AS APPROPRIATE

☒ The Bidder has completed the Prequalification Form together with all other required data for McCarthy's' Contractor Default Insurance Program; OR

☐ The Bidder has not completed the Prequalification Form together with all other required data for McCarthy's' Contractor Default Insurance Program because the Bidder has provided the Form and all such information to McCarthy in the past 12 months for the following project:

_____ Project, which bid on: _____.

RESPONSIVE BID REQUIREMENTS:

DO NOT ENCLOSE YOUR STANDARD TERMS AND CONDITIONS

If any exceptions are taken to the requirements of this Proposal form, attach a separate sheet listing those exceptions, stating the sections and paragraphs and the specific exception.	GS (initials)
In submitting this proposal, the Bidder certifies that this bid is valid for ~~100 calendar days~~. 60 DAYS ONLY	GS (initials)
In submitting this Proposal as described herein, we agree to complete the work in accordance with the included Preliminary Construction Sequence.	GS (initials)
In submitting this Proposal, the Bidder certifies that all cost for extended warranties to start on the date of Substantial Completion is included.	GS (initials)
In submitting this proposal as described herein, we confirm that we have received, reviewed and agree to all commercial terms stated in the McCarthy Subcontract and Purchase Order Agreement. Any exception taken to the commercial terms stated in these Agreements must be listed on a separate sheet noting the article or paragraph and the specific exception. ***Bidders attached Standard Terms and Conditions will not be acknowledged or accepted as part of any given bid.***	GS (initials)
In submitting this proposal as described herein, the Bidder certifies that this bid is coordinated based on a complete set of documents and that there will be no claims for change order based on the assertion that the Bidder did not have a complete set of Bidding Documents.	GS (initials)
In submitting this proposal, the Bidder certifies that they have included all spare parts, training, O & M Manuals, shop drawings and administration costs as associated to comply with the requirements of the specifications and as listed for their scope of work.	GS (initials)
A bid will be considered non-responsive if the Subcontractor Pre-Qualification Form is not completed as part of the Bid Form **(or on file at McCarthy office)**.	GS (initials)
The Bidder, by submitting their bid, represents that they have read and understand the scope requirements of the Bidding Documents.	GS (initials)

The Bidder certifies that any proposed materials in this scope of work meet or exceeds the requirements stated in the specifications unless noted otherwise within this proposal.	GS (initials)
The bidder certifies that the price listed in this bid is a firm Price through the final delivery of the materials proposed herein, and that no material escalation will be accepted as part of this proposal.	GS (initials)

Within fifteen (10) days after receipt by the Bidder from McCarthy of the Subcontract or Purchase Order, the Bidder will execute and return to McCarthy said Subcontract or Purchase Order and if notified from McCarthy that Bidder is not to be enrolled in McCarthy's Contractor Default Insurance Program, deliver to McCarthy Performance and Labor and Material Payment Bonds for the Subcontract or a Supply Contract Bond for the Purchase Order, or the difference between the amount of the bid and such larger amount for which McCarthy may subcontract with another party to perform the work covered by said bid, together with all court costs, all attorney fees and all other expense of recovery, all of which shall not exceed the Bid Security attached in the amount of 15% of the bid, will become the property of McCarthy. The bonds shall name McCarthy as Obligee.

If an Individual:

Authorized Signature: _____

Name (print): _____

Email: _____

Business Address: _____

_____

If a Partnership:

Authorized Signature: _____

Name (print): _____

Email: _____

Authorized Signature: _____

Name (print): _____

Email: _____

Business Address: _____

_____

If a Corporation:

Authorized Signature: Geoff Seymore

Name (print): Geoff Seymore

Email: gseymore@hurricanefenceco.com

Title: Project Manager

Business Address: 3404 W Lincoln St Phoenix Az 85009

_____

Telephone 602.484.9005

Contractor License Number: 303821 KB-1

General Liability Insurance Carrier (not the agent): _____

*Please attach a sample certificate of insurance and current W9 form to your bid.

Project Name: Chandler Reclaimed Water Interconnect Facility
Project No. WW1901.402

Work Category: **06A - Fiberglass Fabrications**

Date: 4/12/2022 Rev 6/1/2022

Recommended

	COMPANY INFORMATION	National Grating	Brown-Campbell	Fibergrate	Grating Pacific	Grating Systems
		Jake Mangone	Doug Hibbard	Scott Elderworth	Allen Figueroa	Craig Malan
		(604) 980-3688	(602) 544-6678	(623) 256-3614	(623) 936-9200	(801) 621-4243
		jake@nationalgrating.com	doughibbard@brown-campbell.com	selderworth@fibergrate.com	afigueroa@gratingpacific.com	craig@gratingsystems.com
	TOTAL WORK CATEGORY PACKAGE VALUE	**$4,299**	**$3,717**	**$9,889**	**DECLINED**	**DECLINED**
	MCCARTHY SUBCONTRACT & FRONT END TERMS					
1	Compliant with McCarthy Front Ends	No	No	No		
2	Bid Submitted on McCarthy Bid Form	No	No	No		
3	Bid Bond Included with Bid (if over $500k Sub/$1 Mil Supplier)	n/a	n/a	n/a		
4	Surety Company	n/a	n/a	Hartford Fire		
5	Surety AM Best Rating (Must be A- or Better)	n/a	n/a	Yes		
6	AM Best Financial Size X($500M to $750M) or higher	n/a	n/a	Yes		
7	Anticipated contract amount is less than the Federal UW Limit as listed on the Treasury Listing	Yes	Yes	Yes		
8	Bond/CDI Cost	1.295%	1.295%	1.295%		
9	Included Insurance Requirements (Per Matrix)	Yes	Yes	Yes		
10	GL Insurance Company Name	n/a	n/a	First Continental		
11	GL Insurance Carrier AM Best Rating (Must be A- or Better)	n/a	n/a	Not Rated		
12	PRL Insurance (If required by the Front Ends)	Yes	Yes	Yes		
13	Pollution Insurance (If required by the Front Ends)	n/a	n/a	n/a		
14	Tier 1 Approved	No	No	Yes		
15	Tier 2 Approved	No	No	No		
16	Safety Items:					
17	OSHA Recordable Incident Rate (Current)	n/a	n/a	n/a		
18	Agrees to comply with PPE requirements including 100% glove policy	Yes	Yes	Yes		
19	Acknowledges updated ladder policy (platform ladders)	Yes	Yes	Yes		
20	Task Hazard Analysis included for all tasks	Yes	Yes	Yes		
21	Tie-off above 6' required	Yes	Yes	Yes		
22	Includes Hoisting for Sub's Own Work Scope	n/a	n/a	n/a		
23	Acknowledges Soils Report	n/a	n/a	n/a		
24	Acknowledges Addenda	Yes	Yes	Yes		
25	Hold Bid for 180 Days	No	No	No		
26	Pricing good for the duration of the project	No	No	No		
27	Sales Tax Included	No	No	No		
28	**Market Questions**					
29	Have you experienced and/or do you anticipate any issues with existing suppliers or vendors?	No	No	No		
30	Do you have any overseas suppliers that may be impeding your supply chain?	No	No	No		
31						
32	Per Plans & Specifications	Yes	Yes	Yes		
33	Division 1 as it relates to this scope of work	Yes	Yes	Yes		
34	01010 - Summary of Work	Yes	Yes	Yes		
35	01300 - Submittals	Yes	Yes	Yes		
36	01640 - Materials and Equipment	Yes	Yes	Yes		
37	05051 - Anchor Bolts, Toggle Bolts, and Concrete Inserts	Yes	Yes	Yes		
38	06600 - Fiberglass Fabrications	Yes	Yes	Yes		
	Scope of Work					
	Base Bid:	$2,244	$1,669	$8,763		

Project Name: Chandler Reclaimed Water Interconnect Facility
Project No. WW1901.402

Work Category: **06A - Fiberglass Fabrications**

Date: 4/12/2022 Rev 6/1/2022

Recommended

	COMPANY INFORMATION	National Grating	Brown-Campbell	Fibergrate	Grating Pacific	Grating Systems
		Jake Mangone	Doug Hibbard	Scott Elderworth	Allen Figueroa	Craig Malan
		(604) 980-3688	(602) 544-6678	(623) 256-3614	(623) 936-9200	(801) 621-4243
		jake@nationalgrating.com	doughibbard@brown-campbell.com	selderworth@fibergrate.com	afigueroa@gratingpacific.com	craig@gratingsystems.com
	TOTAL WORK CATEGORY PACKAGE VALUE	**$4,299**	**$3,717**	**$9,889**	**DECLINED**	**DECLINED**
39	Provide all labor, materials, tools, equipment and appurtenances as required to perform the Work Category 06A - Fiberglass Fabrications, in accordance with and reasonably inferable from the Contract Documents, complete and without exception unless otherwise noted below, including, but not limited to the following:	Yes	Yes	Yes		
40	Check to Spec completed and submitted to McCarthy	Yes	Yes	Yes		
41	Bid Held for how many days	28 days	30 days	30 days		
42	***Escalation Moved F2 Esclation Allowance (Not Calculated in Total WC)***	$2,000	$5,000	$2,000		
43	Provide material only for the FRP grating in the chemical storage and containment areas	Yes	Yes	Yes		
44	Provide required angle and clips install FRP grating	$1,000	$1,000	Yes		
45	Provide anchor bolts and epoxy for final installation	$1,000	$1,000	$1,000		
46	Freight Included	Yes	Yes	Yes		
47	Exclude FRP ladders, guardrail, handrail, and grating associated with FRP Tanks	WC 13B	WC 13B	WC 13B		
48	COVID-19 Scope Items					
49	Proposal includes CDC, Federal, State and Local OSHA guidelines for COVID-19.	Yes	Yes	Yes		
50	Your proposal shall include all productivity, schedule, and other impacts to cost and schedule.	Yes	Yes	Yes		
51	All personnel onsite must maintain 6'0" spacing between personnel and shall have facemasks on at all times that align with CDC, Federal, State or Local OSHA guidelines for COVID-19.	Yes	Yes	Yes		
52	Any personnel reporting symptoms must be immediately reported to McCarthy and follow the appropriate testing and quarantine protocols.	Yes	Yes	Yes		
53						
54	End of Scope					
	Bond/CDI Cost	$55	$48	$126		
	TOTAL WORK CATEGORY PACKAGE VALUE	**$4,299**	**$3,717**	**$9,889**		

BROWN-CAMPBELL COMPANY

1-800-472-8464 brown-campbell.com

QUOTATION

FROM: Mark Moore
PHONE#: 800-472-8464
FAX#: 972-926-4496

DATE: 3/29/22
QUOTE#: 1711695
CUSTOMER#: 231784-10

BILL TO:	SHIP TO:
MCCARTHY BUILDING COMPANIES 6225 N 24TH ST UNIT 200 PHOENIX, AZ 85016	MCCARTHY BUILDING COMPANIES 6225 N 24TH ST UNIT 200 PHOENIX, AZ 85016

ATTN: AUSTIN HANCOCK
PHONE#: 480-449-4700
FAX#:

REF:
SHIP DATE: 0/00/00
F.O.B.: DELIVERED VIA: COMMON CARRIER

THANK YOU FOR YOUR INQUIRY, WE ARE PLEASED TO QUOTE THE FOLLOWING:

ITEM#	QTY	MATERIAL	SIZE	AMOUNT
1	1	2 X 2 X 2 TYPE C DK GRAY GRIT 3 AREAS PER S-2.00 AND S-2.21 204 LBS	1' X 51' 51.00 @ $30.61 SQFT =	$1,561.11
2	36	M4 CLIP-SS FOR 222 MOLDED 3 LBS	36.00 @ $3.00 EACH =	$108.00

ALLOW 2 WEEKS BEFORE WE SHIP
PRICE INCLUDES DELIVERY
THANK YOU!
MARK MOORE

TOTAL WEIGHT- 207 LBS QUOTE AMOUNT: $1,669.11

□UOT□
□CC□PT□□C□ PO □□□□□□□□□□□□□□□□□□□□□□□□□□□□ S□□ □□D□□□□□□□□□□□□□□□□□□□□□□□□□□□□□□□□ D□T□□□□□□□□□□□□□□□□□□

PRICES ARE FIRM FOR 24 HOURS UNLESS SPECIFIED OTHERWISE ABOVE AND SUBJECT TO INVENTORY AVAILABILITY.
ST□□D□RD □ROW□□C□MP□□□□ CO□T□RMS □□D CO□D□T□O□S W□□□ □PP□□ U□□□SS OTH□RW□S□ □□D□C□T□D□

Fibergrate Composite Structures Inc

5151 Beltline Rd, Suite 1212 ~ Dallas, TX 75254 USA ~ T: 800-527-4043 ~ F: 972-250-1530

Quote No.61711 Quote Type: Fab Per Approval (Revision 1)
Bid Type: Firm

Customer: McCarthy Building Companies Inc
Address: 6225 N 24th Street
Suite 200
Phoenix, Arizona 85016
United States

Date: March 25, 2022
Phone: 480-449-4700
Fax: (480) 449-4747

Opportunity: McCarthy Chandler WRIF
Location: Phoenix, Arizona

Fibergrate appreciates the opportunity to bid on your FRP requirement, and offers the following quotation for your consideration. Fibergrate is an ISO-9001:2008 certified manufacturer and is one of the original pioneers in the FRP fabrication industry, having invented fiberglass molded grating in 1965. With more than 50 years of experience in FRP fabrications , Fibergrate has the experience and capabilities necessary to design, manufacture , and fabricate the materials for your project to ensure that the assembly at the jobsite will proceed smoothly. Fibergrate continues its commitment as a leader in the FRP market. All of the FRP products and solutions offered in this quotation are heavy metal safe. If you have any questions about heavy metals in FRP products or how they can affect your business, our communities and our environment, please go to our website (www.fibergrate.com) or contact your local Fibergrate Representative.

All material take-offs were derived from drawings and FRP specification received via email on 3/9/22.

MATERIALS of CONSTRUCTION:

Safe-T-Span® I4010 VEFR 1 1/4" deep covered pultruded grating with grit surface and 6" tie bars, color dark gray.

Dynaform® VEFR concrete EZ embedment angle, color slate gray.

Non-Domestic 316 Stainless Steel Hardware

SCOPE of WORK:

Fibergrate® will provide the following:

DRAWINGS S-2.21 & S-2.22:

- (7) 1 1/4" deep x 2' x 2' covered pultruded sump gratings.
- (1) 1 1/4" deep x 3' x 3' covered pultruded sump grating.

NOTE

- All grating are to be furnished with concrete embed angle and hold down clips.

NOTES:

Fibergrate reserves the right to a final review of it's quotation prior to accepting a purchase order.

This quotation allows for three (3) sets of Approval & Erection drawings, additional drawings are available at an additional cost of $5.00 per sheet.

Fibergrate's standard fabrication and manufacturing tolerances will apply as follows:

1.) Structural shapes = +/- 1/8"; Cut grating = + 1/8" / - 5/16".

2.) Cut grating may have open or unequal stub bars.

3.) Specifications for design or products were provided with request for quote.

4.) Design criteria and products used in this quotation are per Fibergrate design standards.

5.) No design calculations are included with the quotation.

6.) Design calculations are available with projects requiring approval drawings at an additional charge.

7.) Fibergrate Composite Structures has a manufacturing facility in Stephenville, TX.

8.) Grating will be attached to the structure using provided hold down clips.

9.) This quotation is based upon customer providing AutoCad drawings to Fibergrate before approval drawings can be started.

10.) All grating notches and penetrations shown on the contract drawing are included in this quotation.

11.) All grating notches and penetrations not shown can be provided at additional cost.

12.) Anchors are available but not included in this quotation unless specifically referenced.

13.) Visit www.fibergrate.com for Company history, literature, catalogs, specifications and product information.

14.) Additional freight is included for early shipment of concrete embed angle.

EXCLUSIONS:(to be provided by others)

Anchor bolts (including concrete screws used in conjunction with grating hold down clips), installation, field measurements and any other items not specifically included in the above described "Scope of Work" are to be provided by others.

PRICING:

Fibergrate will provide prefabricated materials per this quotation for the amount of:

Lump Sum Sales Price: **$8,763.00** (USD) (tax NOT included)

Freight Included in Total Quoted Price for delivery to zip code 85016.

Freight Included based on One Complete Shipment.

Multiple shipments will result in additional charges to be determined at time of request. Executed change orders will be required prior to release of materials for shipment.

TERMS OF DELIVERY:

Terms of Delivery: FOB Point of Origin

SUBMITTAL REVISIONS: Submittal revisions due to customer requested changes will be billed at a rate of $60/HR for any additional drafting and/or engineering.

QUOTE VALIDITY: This quotation is firm for acceptance within thirty (30) days from the Bid Date.

SHIPMENT: Prices are firm for shipment within six (6) months of date of receipt of order. After six (6) months, prices may escalate per the Producer Price Index (PPI) for Finished Goods as reported at www.bls.gov/ppi. Price will be adjusted at quarterly intervals per the PPI until material shipment. Executed change orders will be required prior to release of materials for shipment.

ESTIMATED DELIVERY:

(Lead times to be determined upon receipt of a purchase order.)

Fibergrate Territory Manager: Scott Elderworth
E-Mail: selderworth@fibergrate.com
Tel: 623-256-3614

Fibergrate Field Sales Manager:	West USA House, Brad Gornik E-Mail: bgornik@fibergrate.com Tel: 214-498-5530
This quotation was prepared by:	RDM

Terms of Payment: net 30

Terms of Delivery:

Fibergrate Composite Structures terms and conditions govern this quote. [x] See attached.

Project Name: Chandler Reclaimed Water Interconnect Facility
Project No. WW1901.402

Work Category: **08A - Metal Doors, Frames, and Hardware**

Date: 4/12/2022 Rev 6/1/2022

Recommended

	COMPANY INFORMATION	The Hallgren Co.	Walters and Wolf	Kelley Bros.	American Direct	DH Pace Co.
		Robert Brown	Jeff Aglialoro	Dawn Graves	Douglas Levin	Jeff Woodring
		602-465-0112	480-705-6810	602-254-5967	913-669-6209	(480) 486-1813
		robertb@hallgrenco.com	jalglialoro@waltersandwolf.com	dgraves@kelleybros.com	Dougl@americandirectco.com	jeff.woodring@dhpace.com
	TOTAL WORK CATEGORY PACKAGE VALUE	**$30,385**	**$31,210**	**$32,913**	**$36,843**	**DECLINED**
	MCCARTHY SUBCONTRACT & FRONT END TERMS					
1	Compliant with McCarthy Front Ends	Yes	No	No	No	
2	Bid Submitted on McCarthy Bid Form	Yes	No	No	No	
3	Bid Bond Included with Bid (if over $500k Sub/$1 Mil Supplier)	n/a	n/a	n/a	n/a	
4	Surety Company	Merchants Bonding	Travelers	Fidelity & Deposit	Guarantee Company of North America	
5	Surety AM Best Rating (Must be A- or Better)	Yes	Yes	Yes	Yes	
6	AM Best Financial Size X($500M to $750M) or higher	Yes	Yes	Yes	Yes	
7	Anticipated contract amount is less than the Federal UW Limit as listed on the Treasury Listing	Yes	Yes	Yes	Yes	
8	Bond/CDI Cost	1.295%	1.295%	1.295%	1.295%	
9	Included Insurance Requirements (Per Matrix)	Yes	Yes	Yes	Yes	
10	GL Insurance Company Name	Amerisure	Arch Insurance	Cincinnati Insurance	Valley Forge	
11	GL Insurance Carrier AM Best Rating (Must be A- or Better)	Yes	Yes	Yes	Yes	
12	PRL Insurance (If required by the Front Ends)	n/a	n/a	n/a	n/a	
13	Pollution Insurance (If required by the Front Ends)	n/a	n/a	n/a	n/a	
14	Tier 1 Approved	Yes	Yes	Yes	Yes	
15	Tier 2 Approved	No	No	No	No	
16	Safety Items:					
17	OSHA Recordable Incident Rate (Current)	0	0	1.54	0.52	
18	Agrees to comply with PPE requirements including 100% glove policy	Yes	Yes	Yes	Yes	
19	Acknowledges updated ladder policy (platform ladders)	Yes	Yes	Yes	Yes	
20	Task Hazard Analysis included for all tasks	Yes	Yes	Yes	Yes	
21	Tie-off above 6' required	Yes	Yes	Yes	Yes	
22	Includes Hoisting for Sub's Own Work Scope	Yes	Yes	Yes	Yes	
23	Acknowledges Addenda	Yes	Yes	Yes	Yes	
24	Hold Bid for 180 Days	No	No	No	No	
25	Pricing good for the duration of the project	No	No	No	No	
26	Sales Tax Included	Yes	Yes	Yes	Yes	
27	**Market Questions**					
28	Have you experienced and/or do you anticipate any issues with existing suppliers or vendors?	Yes	Yes	Yes	Yes	
29	Do you have any overseas suppliers that may be impeding your supply chain?	Yes	Yes	Yes	Yes	
30						
31	Per Plans & Specifications	Yes	Yes	Yes	Yes	
32	Division 1 as it relates to this scope of work	Yes	Yes	Yes	Yes	
33	07900 - Joint Sealers	Yes	Yes	Yes	Yes	
34	08710 - Door Hardware	Yes	Yes	Yes	Yes	
35	08110 - Steel Doors and Frames	Yes	Yes	Yes	Yes	
36	09900 - Painting	Yes	Yes	Yes	Yes	
37	09900.1 - Architectural Paints and Coatings	Yes	Yes	Yes	Yes	
	Scope of Work					
	Base Bid:	$29,997	$18,761	$16,992	$24,322	
38	Provide all labor, materials, tools, equipment and appurtenances as required to perform the Work Category 08A - Metal Doors, Frames, and Hardware, in accordance with and reasonably inferable from the Contract Documents, complete and without exception unless otherwise noted below, including, but not limited to the following:	Yes	Yes	Yes	Yes	
39	Check to Spec completed and submitted to McCarthy	Yes	Yes	Yes	Yes	

Project Name: Chandler Reclaimed Water Interconnect Facility
Project No. WW1901.402

Work Category: **08A - Metal Doors, Frames, and Hardware**

Date: 4/12/2022 Rev 6/1/2022

Recommended

	COMPANY INFORMATION	The Hallgren Co.	Walters and Wolf	Kelley Bros.	American Direct	DH Pace Co.
		Robert Brown	Jeff Aglialoro	Dawn Graves	Douglas Levin	Jeff Woodring
		602-465-0112	480-705-6810	602-254-5967	913-669-6209	(480) 486-1813
		robertb@hallgrenco.com	jalglialoro@waltersandwolf.com	dgraves@kelleybros.com	Dougl@americandirectco.com	jeff.woodring@dhpace.com
	TOTAL WORK CATEGORY PACKAGE VALUE	**$30,385**	**$31,210**	**$32,913**	**$36,843**	**DECLINED**
40	Comply with standards and/or custom guidelines as indicated for corresponding door in accordance with applicable floor frame requirements	Yes	Yes	Yes	No	
41	Days bidder is to hold pricing	180 Days	90 Days	60 Days	30 Days	
42	***Escalation Moved F2 Esclation Allowance (Not Calculated in Total WC)***	$3,000	$4,206	$3,443	$4,928	
43	Comply with standards and/or custom guidelines as indicated for corresponding door in accordance with applicable floor frame requirements	Yes	Yes	Yes	Yes	
44	**Exterior Doors Details**					
45	Flush end closure channel, with top and door faces aligned	Yes	Yes	Yes	Yes	
46	Door Face Metal Thickness: 20 Gauge, 0.032 inch Minimum	Yes	$7,050	$7,050	$7,050	
47	Zinc Coating A60/ZF180 Galvannealed	Yes	Yes	$3,450	Yes	
48	**Door Core Materials**	Yes	Yes	Yes	Yes	
49	Polystyrene, 1 lbs. minimum density	Yes	Yes	Yes	Yes	
50	Foam Plastic Insulation, maximum (FSI) of 75, Maximum (SDI) of 450 in accordance to ASTM E84	Yes	Yes	Yes	Yes	
51	Locksets	Yes	Yes	Yes	Yes	
52	Door Thickness: 1-3/4 inches	Yes	Yes	Yes	Yes	
53	Door Finish: Factory primed and field finished	Yes	Yes	Yes	Yes	
54	**Hollow Metal Frames:**					
55	**Exterior Door Frame**					
56	Galvanized: Hot Dipped sinc iron alloy coated in accordance with ASTM A653/A653M	Yes	Yes	Yes	Yes	
57	Frame Metal Thickness: 18 Gauge minimum	Yes	No	No	No	
58	frame Finished: factory primed and field finished	Yes	Yes	Yes	Yes	
59	Weather Stripping : Separate	n/a	n/a	n/a	n/a	
60	Install doors in accordance with manufacturer's instructions and related requirements of specified door and frame standards or custom guidelines indicated	Yes	Yes	Yes	Yes	
61	Install Frames in accordance with manufacturer's instructions and related requirements of specified frame standards or custom guidelines indicated	Yes	$5,000	$5,000	$5,000	
61	All metallic surfaces (including pipe, supports, and enclosure) shall be primed per the requirements of the 09900 - Painting	Yes	Yes	Yes	Yes	
62	Shipping shall be FOB jobsite	Yes	Yes	Yes	Yes	
63	Unloading & storage	Yes	Yes	Yes	Yes	
64	Temporary protection & enclosure	Yes	Yes	Yes	Yes	
65	COVID-19 Scope Items					
66	Proposal includes CDC, Federal, State and Local OSHA guidelines for COVID-19.	Yes	Yes	Yes	Yes	
67	Your proposal shall include all productivity, schedule, and other impacts to cost and schedule.	Yes	Yes	Yes	Yes	
68	All personnel onsite must maintain 6'0" spacing between personnel and shall have facemasks on at all times that align with CDC, Federal, State or Local OSHA guidelines for COVID-19.	Yes	Yes	Yes	Yes	
69	Any personnel reporting symptoms must be immediately reported to McCarthy and follow the appropriate testing and quarantine protocols.	Yes	Yes	Yes	Yes	
70						
71	End of Scope					
72	Bond/CDI Cost	$388	$399	$421	$471	
	TOTAL WORK CATEGORY PACKAGE VALUE	**$30,385**	**$31,210**	**$32,913**	**$36,843**	

American Direct – Tempe
1930 West 3rd Street
Tempe, AZ 85281
Phone (800)593-5310
(480)397-1311
Fax (480)345-7010

March 30, 2022

Prepared For: Nicole Azuri
McCarthy

Project Info: Chandler Reclaimed Water
Phoenix, AZ

DESCRIPTION

We are grateful for your consideration of our proposal for the following material :

- Steel Doors & Frames
- Finish Hardware
- Installation (as described on following pages)

Complete price for material and installation listed above $26,232.00
See following pages for breakouts, notes, and exclusions

Sincerely,

Tom Rose, DAHC/CDC

Tom Rose, DAHC/CDC
Senior Sales Representative

Project Price Summary

AMERICANDIRECT
innovation at the door

American Direct – Tempe
1930 West 3rd Street
Tempe, AZ 85281
(480)397-1311
Fax (480)345-7010

Project: **147066 - Chandler Reclaimed Water Interconnect Facility - Revison 1** **March 30, 2022**
Location: **Chandler, AZ**

Base Bid:

Item No.	Description	Total Amount
1.	**Steel Doors & Frames - Section 08110** 03 ea Hollow metal frames - 16 ga. A60 galvanized steel welded and primed. 03 ea Hollow metal doors - 18 ga. polystyrene core, A40 galvanized steel, 24 x 12 metal louver, top cap installed and primed.	$10,018.00
2	**Finish Hardware - per 08710 and on door schedule sheet A-1.83 for single doors** 1 lot - Finish hardware, per sets on sheet A-183 No hardware at Overhead Door.	$13,992.00
3	**Installation** ****Installation of 3 doors and associated hardware, excluding RX switch, Power Supply and DPS by Security Contractor* *Note - Installation, unloading, handling, distributing, storing, etc. of Welded HM Frames to be performed* ***by others***	$2,222.00
	Lump Sum Price (*excludes any and all alternates*)	**$26,232.00** **price excludes tax and bond*
Addenda 1	**No change in price**	$0.00

General Notes & Qualifications:

- **Plan Date 2/00/2022** **Spec Date 2/00/2022** **Addendum Number 1**
- Proposal is based on acceptance of all scopes as a package. Price for separate parts of the work may be increased from the values shown above.
- Retention will only apply to installation & labor portion of the above pricing. Material retention not applicable
- An amount equal to 10% of the total contract value will be invoiced on the initial pay application for preconstruction services, engineering, and mobilization.
- Due to world economic reality involving steel and the pricing of its raw materials steel products quoted herein are for market pricing today and may be subject to confirmation of steel pricing and
- Lead times quoted represent the lead times current to the quote date above. Lead times do fluctuate and if the project is awarded longer than 30 days from quoted date, the lead times quoted can
- If material is being supplied but installed by another contractor, it is the installing contractors responsibility (and not American Directs responsibility) to receive, check, verify, inventory, unload,

Escalation and Material Pricing Notes:

001 Pricing of welded hollow metal frames and HM doors is good for frames / doors ordered by 07-20-2022. Any frames / doors not on order with the factory by this date will need to be re-priced at current market pricing.
002 Pricing of door HW is good until 9-30-2022. Anything ordered after this date will be re-priced at current market pricing.
003 For material to be consideed 'on-order' with the factory requires an approved submittal to be in American Direct's hands 5 to 10 business days prior to the above dates.
004 If you're planning on awarding this project to American Direct, please get with us prior to locking in budget with owner, due to the continual volatility in the construction materials market. It is imperative that you provide American Direct with dates as to when you will be taking the above quoted material so American Direct can acquire pricing based on your schedule and those need-by dates, and provide you with the most accurate costing BEFORE the budget is locked in with the owner.

005 Excludes field welding, field dimensions, and field measurements
006 Excludes hardware at doors/openings not being supplied by American Direct
007 Excludes access panels, gates, etc.
008 Excludes field finishing or touchup of any kind
009 Excludes Bituminous undercoating at hollow metal frames

Steel Door & Frame Notes:

- Standard factory lead time of 7-9 weeks from approval of complete submittal package
- See above for specific opening details
- Hollow metal frames are 16ga, un-equal rabbet, 2" face, interlocking tabs and face welded, A60 galvanized steel. All frames primed, reinforced and prepped for hardware as required.
- Hollow metal doors are 18ga, std. lock seam edge construction, beveled 1 side,polystyrene core, A40 galvanized steel. Exterior doors to have flush top caps sealed, Primed.
-

Prepared by:
Tom Rose, DAHC/CDC
Tom Rose, DAHC/CDC
Senior Sales Representative

□□□□□□ Bros.
□ST□□□SH□D □□ □□□□

PROPOSAL

Phoenix Office L-05 Arizona Contr. License # 102509

3440 N 27'th Avenue, Phoenix, AZ 85017
FX: 602.254.5224 PH: 602.254.5967

MARCH 24, 2022

We □re p□e□sed to prese□t th□s □uot□t□o□ per □rch□tectur□□p□□□ p□□es d□ted □□□RU□R□ □□□□□
□DD□□DUM□□

PROJECT: CHANDLER RECLAIMED WATER INTERCONNECT FACILITY

08 11 13- STEEL DOORS & FRAMES

- □ □□ ***CURRIES TRIO 777*** HO□□OW M□T□□ □□□□ DOORS
- □ □□ ***CURRIES*** HO□□OW M□T□□ □□□□ □□S□D□D □R□M□S □O□ JOS□T□□S□T □□ OTH□RS

08 71 00- DOOR HARDWARE

Schlage □OC□S□TS□***LCN*** C□OS□RS□***Von Duprin*** □□□T D□□□C□S

INSTALLATION OF DOORS & HARDWARE

MATERIAL & INSTALLATION TOTAL: $16,992.00

□DU□ TO □O□□T□□□ SUPP□□□M□T□R□□□ M□R□□T PROPOS□□ C□□ O□□□ □□ H□□D □OR □□□D□□S□□□□ M□T□R□□□ R□□□□S□D □OR ORD□R □□T□R TH□S T□M□ W□□□ □□ SU□J□CT TO R□□□UOT□□

Exclusions: Respo□s□□□□t□ □or wor□ □□d □ □ter□□s **not part of the above sections, unless specifically noted otherwise.** These □□c□ude t□□□□o□ds□u□o□d□□□□de□□er□□□st□□□t□o□□□□ss□□□□□□□□p□□t□□□pre□ □□□sh□□□□□e□dwor□□□ e□sur□□□□□e□d sp□c□□□□r□□ e □st□□□t□o□□□rout□□□□ow □o□t□□e co□□ect□o□s□□oc□ □o□es □□d □tu□ □□ous co□t□□□ □***asphaltic emulsion***□□Th□s □□d □s □□sed o□ □□ est□□ □te □□d shou□d □ot □e co□s□dered per □ □u□□e□□□eered project□□e□e□ □ros w□□□ot □e he□d respo□s□□e □or □□□□ □ ss□□□ or □□correct □te□s □□ the p□□□s □□d spec□□c□t□□s dur□□□ the est□□ □t□□□ □□d □dd□□□ process or the e□□□eer□□□ process □□w□rded the project□□□□ d□screp□□c□es th□t □re □u□d □□ the □dd□□□ or post □w□rd e□□□eer□□□ process w□□□e □oted □ccord□□□□□**Kelley Bros of Arizona always excludes installation of hardware for gates, overhead doors, glass doors & aluminum openings.**

Th□s □uot□t□o□ o□ □ □ter□□□re□uested □s **FOB PHX, tailgate delivery** □re□□ht □□owed to jo□s□te□**30-day terms**□ □ □ter□□□□□ed □□store□□□d su□ject to cred□t □ppro□□□ □□ow t□□e □or spec□□□□ □ter□□□orders to c□e□r □□ctor□ to est□□ □te □ppro□□□ □te sh□pp□□□ t□□e□Use th□s Propos□□□s □our purch□se order □□s□□□□□ the □ccept□□ce □□d retur□□□□ o□e cop□ to our o□□ce□**Quote good for 30 days.** □ot□□□ our o□□ce □or t□□e e□te□s□□ □□re□u□red□

□uoted □□□D□W□ □R□□□S□□HC_____ □ccept□□ce□_____

D□te□M□RCH □□□□□□□□_____ D□te□_____

Walters & Wolf
Construction Specialties

March 25, 2022

Proposal #1921

Jersey Campos
McCarthy Building Companies
6225 N. 24th ST.
Suite 200
Phoenix, AZ 85016

via email – 1 page total
jcampos@mccarthy.com

Re: Chandler Reclaimed Water Interconnect Facility Chandler, AZ

We are pleased to submit the following proposal for doors, frames, and hardware on the aforementioned project. This proposal is based on plans dated 02/2022 by Wilson Engineers Architects.

SCOPE: Furnish and install doors, frames, and hardware. (Excludes grouting and installation of HM welded frames).

METAL FRAMES: Total (3) Hollow Metal Welded Frames A60 16 gage 30x80x8”

METAL DOORS: Total (3) Hollow Metal Doors with Louver A60 18 gage 30x80

FINISH HARDWARE: 9 ea. 5BB14.5x4.5NRP Hinges, 3 ea. 5BB1 4.5x4.5 TW8 Electric Hinges, 3 ea. VD 9875-L-E996-06-FSE, 3 ea. 80-115 Cyl, 3 ea. Everest Core 80-037-EV29 R, 3 ea. LCN 4040XP SCHUSH Closers, 3 ea. Rain Drip, 3 ea. S88 seal, 3 ea. 315CN Sweeps, 3 ea. 172A MSES10 Thresholds, 3 ea. MT15 Reader

TOTAL PRICE, FURNISHED AND INSTALLED - $18,761.00

Qualifications:
Excludes bond if required
Work to be completed during normal business hours
Excludes line and low voltage wiring
Hollow Metal Welded Frames FOB jobsite

Thank you for the opportunity to bid on this project, we look forward to working with you.

Jeff Aglialoro

Project Name: Chandler Reclaimed Water Interconnect Facility
Project No. WW1901.402

Work Category: **08D: Overhead Coiling Doors**

Date: 4/12/2022 Rev 6/1/2022

Recommended

COMPANY INFORMATION		**Miner, LTD**	Cookson Door Sales	DH Pace Co	Nationserve	Quality Overhead Door
		Tosh Daley	Mark Montgomery	Darrin Mitchell	Lawrence Kraus	Joani Adamsom
		(602) 426-1200	480-589-6784	(480) 968-3667	(480) 383-8510	(480) 838-8850
		tosh.daley@minorcorp.com	markmontgomery@cooksonaz.com	darrin.mitchell@dhpace.com	lkraus@nationserve.com	service@qualityovhd.com
TOTAL WORK CATEGORY PACKAGE VALUE		**$13,085**	**$16,248**	**DECLINED**	**DECLINED**	**DECLINED**
MCCARTHY SUBCONTRACT & FRONT END TERMS						
1	Compliant with McCarthy Front Ends	Yes	Yes			
2	Bid Submitted on McCarthy Bid Form	Yes	Yes			
3	Bid Bond Included with Bid (if over $500k Sub/$1 Mil Supplier)	n/a	n/a			
4	Surety Company	Liberty Mutual	Travelers			
5	Surety AM Best Rating (Must be A- or Better)	Yes	Yes			
6	AM Best Financial Size X($500M to $750M) or higher	Yes	Yes			
7	Anticipated contract amount is less than the Federal UW Limit as listed on the Treasury Listing	Yes	Yes			
8	Bond/CDI Cost	1.295%	1.295%			
9	Included Insurance Requirements (Per Matrix)	Yes	Yes			
10	GL Insurance Company Name	Travelers	Liberty Insurance			
11	GL Insurance Carrier AM Best Rating (Must be A- or Better)	Yes	Yes			
12	PRL Insurance (If required by the Front Ends)	n/a	n/a			
13	Pollution Insurance (If required by the Front Ends)	n/a	n/a			
14	Tier 1 Approved	Yes	Yes			
15	Tier 2 Approved	No	No			
16	Safety Items:					
17	OSHA Recordable Incident Rate (Current)	3.76	2.69			
18	Agrees to comply with PPE requirements including 100% glove policy	Yes	Yes			
19	Acknowledges updated ladder policy (platform ladders)	Yes	Yes			
20	Task Hazard Analysis included for all tasks	Yes	Yes			
21	Tie-off above 6' required	Yes	Yes			
22	Includes Hoisting for Sub's Own Work Scope	Yes	Yes			
23	Acknowledges Addenda	Yes	Yes			
24	Hold Bid for 180 Days	No	No			
25	Pricing good for the duration of the project	No	No			
26	Sales Tax Included	No	No			
27	**Market Questions**					
28	Have you experienced and/or do you anticipate any issues with existing suppliers or vendors?	Yes	No			
29	Do you have any overseas suppliers that may be impeding your supply chain?	Yes	No			
30						
31	Per Plans & Specifications	Yes	Yes			
32	Division 1 as it relates to this scope of work	Yes	Yes			
33	09700 - Joint Sealers	Yes	Yes			
34	08710 - Door Hardware	Yes	Yes			
35	08331 - Overhead Coiling Doors	Yes	Yes			
Scope of Work						
Base Bid:		$12,918	$16,040			
36	Provide all labor, materials, tools, equipment and appurtenances as required to perform the Work Category 08D - Overhead Coiling Doors, in accordance with and reasonably inferable from the Contract Documents, complete and without exception unless otherwise noted below, including, but not limited to the following:	Yes	Yes			
37	Check to Spec completed and submitted to McCarthy	Yes	Yes			

Project Name: Chandler Reclaimed Water Interconnect Facility
Project No. WW1901.402

Work Category: **08D: Overhead Coiling Doors**

Date: 4/12/2022 Rev 6/1/2022

Recommended

	COMPANY INFORMATION	Miner, LTD	Cookson Door Sales	DH Pace Co	Nationserve	Quality Overhead Door
		Tosh Daley	Mark Montgomery	Darrin Mitchell	Lawrence Kraus	Joani Adamsom
		(602) 426-1200	480-589-6784	(480) 968-3667	(480) 383-8510	(480) 838-8850
		tosh.daley@minorcorp.com	markmontgomery@cooksonaz.com	darrin.mitchell@dhpace.com	lkraus@nationserve.com	service@qualityovhd.com
	TOTAL WORK CATEGORY PACKAGE VALUE	**$13,085**	**$16,248**	**DECLINED**	**DECLINED**	**DECLINED**
38	Bid Held for how many days	0 Days	30 Days			
39	***Escalation Moved F2 Esclation Allowance (Not Calculated in Total WC)***	$2,584	$1,625			
40	Provide gerneral construction, electrical equipment, and component connections and details	Yes	Yes			
41	**Coiling Door**	Yes	Yes			
42	Capable of withstanding positive and negative wind loads of 20 PSF	Yes	Yes			
43	Sandwich slat construction with insulated core of Foamed-in-place polyurethane insulation: minimum R-value of 8.1	Yes	Yes			
44	Nominal Slat Size 0-3/4 (19 mm) wide by required length	Yes	Yes			
45	Finish: Factory painted, white color	Yes	Yes			
46	Galvinized Steel	Yes	Yes			
47	Hood Enclosed: Manufacturer's standard; Prime Steel	Yes	Yes			
48	Surface Mounted	Yes	Yes			
49	Locking Devices: Lock and latch handle on outside	Yes	Yes			
50	**Electric Operation**					
51	Mounting:Side Mounted	Yes	Yes			
52	Motor Rating: 1/3 HP, continuous Duty	Yes	Yes			
53	Motor Voltage: 120 Colts, single phase, 60 Hz	Yes	Yes			
54	Brake: Adjustable friction clutch type, activated by motor controller	Yes	Yes			
55	Manual override in case of power failure	Yes	Yes			
56	Control Station	Yes	Yes			
57	Provide standard three button (Open-Close-Stop) momentary-contact conrtol device for each operator complying UL 325	Yes	Yes			
58	24 volt circuit	Yes	Yes			
59	Surface Mounted , at interior door jamb	Yes	Yes			
60	Safety edge located t bootom of coiling door, full width, elctro-mechanical sensitized type, wired stop and reverse door direction upon striking object	Yes	Yes			
61	Shipping shall be FOB jobsite	Yes	Yes			
62	Unloading & storage	Yes	Yes			
63	Temporary protection & enclosure	Yes	Yes			
64	COVID-19 Scope Items					
65	Proposal includes CDC, Federal, State and Local OSHA guidelines for COVID-19.	Yes	Yes			
66	Your proposal shall include all productivity, schedule, and other impacts to cost and schedule.	Yes	Yes			
67	All personnel onsite must maintain 6'0" spacing between personel and shall have facemasks on at all times that align with CDC, Federal, State or Local OSHA guidelines for COVID-19.	Yes	Yes			
68	Any personnel reporting symptoms must be immediately reported to McCarthy and follow the apropriate testing and quarantine protocols.	Yes	Yes			
69						
70	End of Scope					
	Bond/CDI Cost	$167	$208			
	TOTAL WORK CATEGORY PACKAGE VALUE	**$13,085**	**$16,248**			

QUOTATION

Q-374193.00

To: **McCarthy Building Co., Inc.**
□□□□ □ □□th St
Su□te □□□
Phoe□□□□□ □□□□□

Attn: **Nicole Azuri**

Phone: □□□□□□□□□□□□

Fax:

Email: □oster□ □cc□rth□co□

Issued: □rd□□□M□rch □□□□□□□

Expiration: Mo□d□□□□pr□□□□□□□□

Sales Contact: M□r□Mo□t□o□er□
D□rect□ □□□□□□□□□□□ Ce□□ □□□□□□□□□□□□

□□ □□□ □ □r□□ o□t□o□er□□ coo□so□□□co□

Reference: Ch□□d□er RW□□

□t□	Descr□pt□o□	Pr□ce	Tot□□

We propose to furnish and install the following:

□ **12' x 10' Cookson ESD20 Insulated Rolling Steel Door**
□□□□□ □□□e □su□ted s□ts
□Ch□□ ho□st oper□t□o□
□St□□d□rd co□ors□t□□□wh□te or □re□

Tot□□ □□□□□□□□□

□□ectr□c Oper□tor Opt□o□ □or □su□ted Ro□□□ Stee□□SD□□s□

□ **US Gear 1/2HP Operator**
□□□ce o□co□□□ ou□ted oper□tor
□□□□□PH
□Photo e□es □□
□Mo□tored s□□et□ed□e
□□ □utto□ push st□t□o□

Tot□□ □□□□□□□□□

Project Total: **$13,540.00**

For Standard Terms & Condtions of Sale please visit:
http□□dur□ser□corp□co□ □ter□ s□ter□ s□□□d□co□d□t□o□s□pd□

Legal Entity name is Duraserv Corp
FEIN No. 46-4394239.
Address: 2200 Luna Rd, Ste 160, Carrollton, TX 75006.
All contract documents should be sent to contracts@duraservcorp.com.
All insurance requests should be directed to insurance@duraservcorp.com.

□□pr□ces □uoted here□□ □re su□ject to stee□pr□ce □□cre□ses □ro□ our supp□ers□□□cre□ses □ □□□e □pp□ed to orders □e□ore the t□□e o□sh□p□e□t □□cert□□□ s□u□t□o□s□Most supp□ers h□□e □□or□ed us o□the□r □□te□t to □□cre□se pr□ces□□ut we h□□e □□tt□e de□□□t□□e □□□or□ □t□o□ □t th□s po□□t□So□e supp□ers h□□e h□d the□r□ter□ □u□□□□ co□tr□cts shorte□ed or resc□□ded □□stee□□ □□s □□d□or who□es□ers□thus c□us□□□ pr□ce u□cert□□□t□□We w□□□tr□to □eep □ou □□or□ed o□□□□□pe□d□□□ □□□ou□ce□e□ts or □□cre□ses□□□d □so tr□to □ t□□□te these □s □est we c□□□Th□□□s □or □our □us□□ess □□d u□derst□□d□□□□

□ccepted □□ _____

□□co□e □□ur□□McC□rth□ □u□d□□□ Co□□□c□ D□te□

PO □□ _____

Project Name: Chandler Reclaimed Water Interconnect Facility
Project No. WW1901.402

Work Category: **09A - Paintings and Coatings**

Date: 4/12/2022 Rev 6/1/2022

Recommended

	COMPANY INFORMATION	Revolution Industrial	PPC	JCPI	AIMS	Murphy Industrial Coating
		Brennen Pierson	Craig Paris	Larry Nuciforo	Tim Wilcox	Gilles Bussieres
		480-735-8521	480-588-7751	480-229-2976	480-486-9365	480-981-0185
		Bpierson@revolutioninindustrial.com	craigp@teamppc.com	lnuciforo@jpciservices.com	twilcox@aimscompanies.com	gilles@murphy.ac
	TOTAL WORK CATEGORY PACKAGE VALUE	**$624,479**	**$761,684**	**$1,272,907**	**DECLINED**	**DECLINED**
	MCCARTHY SUBCONTRACT & FRONT END TERMS					
1	Compliant with McCarthy Front Ends	Yes	Yes	Pending		
2	Bid Submitted on McCarthy Bid Form	Yes	Yes	Pending		
3	Bid Bond Included with Bid (if over $500k Sub/$1 Mil Supplier)	Yes	Yes	Pending		
4	Surety Company	Old Republic Surety	North American Specialty Insurance	Employers Mutual		
5	Surety AM Best Rating (Must be A- or Better)	Yes	Yes	Yes		
6	AM Best Financial Size X($500M to $750M) or higher	Yes	Yes	Yes		
7	Anticipated contract amount is less than the Federal UW Limit as listed on the Treasury Listing	Yes	Yes	Yes		
8	Bond/CDI Cost	15.000%	2.000%	2.500%		
9	Included Insurance Requirements (Per Matrix)	Yes	Yes	Yes		
10	GL Insurance Company Name	Navigators Specialty Insurance	Continental Insurance	American Hallmark		
11	GL Insurance Carrier AM Best Rating (Must be A- or Better)	Yes	Yes	Yes		
12	PRL Insurance (If required by the Front Ends)	n/a	n/a	n/a		
13	Pollution Insurance (If required by the Front Ends)	Yes	Yes	Yes		
14	Tier 1 Approved	Yes	Yes	Yes- Conditions		
15	Tier 2 Approved	n/a	n/a	n/a		
16	Safety Items:	Yes	Yes	Yes		
17	OSHA Recordable Incident Rate (Current)	Yes	1.33	8.04		
18	Agrees to comply with PPE requirements including 100% glove policy	Yes	Yes	Yes		
19	Acknowledges updated ladder policy (platform ladders)	Yes	Yes	Yes		
20	Task Hazard Analysis included for all tasks	Yes	Yes	Yes		
21	Tie-off above 6' required	Yes	Yes	Yes		
22	Includes Hoisting for Sub's Own Work Scope	Yes	n/a	Yes		
23	Acknowledges Soils Report	n/a	n/a	n/a		
24	Acknowledges Addenda	Yes	1	Yes		
25	Hold Bid for 180 Days	Yes	Yes	No		
26	Pricing good for the duration of the project	No	No	No		
27	Sales Tax Included	No	No	No		
28	**Market Questions**					
29	Have you experienced and/or do you anticipate any issues with existing suppliers or vendors?	No	No	No		
30	Do you have any overseas suppliers that may be impeding your supply chain?	No	No	No		
31						
32	Per Plans & Specifications	Yes	Yes	Yes		
33	Division 1 as it relates to this scope of work	Yes	Yes	Yes		
34	09900 - Painting	Yes	Yes	Yes		
35	09900.1 - Architectual Paints and Coatings	Yes	Yes	Yes		
36	09910 - PVC Liner	No	Yes	Yes		
37	09920 - Coatings Systems	Yes	Yes	Yes		
38	09920.1 - Membrane Facility Coatings	Yes	Yes	Yes		

Project Name: Chandler Reclaimed Water Interconnect Facility
Project No. WW1901.402

Work Category: **09A - Paintings and Coatings**

Date: 4/12/2022 Rev 6/1/2022

Recommended

	COMPANY INFORMATION	Revolution Industrial	PPC	JCPI	AIMS	Murphy Industrial Coating
		Brennen Pierson	Craig Paris	Larry Nuciforo	Tim Wilcox	Gilles Bussieres
		480-735-8521	480-588-7751	480-229-2976	480-486-9365	480-981-0185
		Bpierson@revolutioninindustrial.com	craigp@teamppc.com	lnuciforo@jpciservices.com	twilcox@aimscompanies.com	gilles@murphy.ac
	TOTAL WORK CATEGORY PACKAGE VALUE	**$624,479**	**$761,684**	**$1,272,907**	**DECLINED**	**DECLINED**
39	09983 - Vinyl Ester with Graphite Lining Systems	No	No	No		
Scope of Work						
Base Bid:		$338,956	$544,949	$1,185,060		
40	Provide all labor, materials, tools, equipment and appurtenances as required to perform the Work Category - 09A Painting and Coatings in accordance with and reasonably inferable from the Contract Documents, complete and without exception unless otherwise noted below, including, but not limited to the following:	Yes	Yes	Yes		
41	1 year warranty from Final Acceptance (March 2024)	Yes	Yes	Yes		
42	Number of days holding Bid	180 days	180 days	90 days		
43	Added cost to hold to 180	n/a	n/a	n/a		
44	Surface Preparation and Coatings as required in 09900.	Yes	Yes	Yes		
45	**Areas to be Coated but are not limited to:**	Yes	Yes	Yes		
46	All exposed process mechanical piping (Excluding SS, Bronze and High Temp Pipe)	Yes	Yes	Yes		
47	Exterior/Interior Doors and Frames	Yes	Yes	Yes		
48	Exposed Structural Steel	Yes	Yes	Yes		
49	Blower Bldg. Steel	Yes	Yes	Yes		
50	Electrical Bldg Steel	Yes	Yes	Yes		
51	RWPS- Canopy Steel	Yes	Yes	Yes		
52	Membrane- Canopy Steel "Lower Section"	Yes	Yes	Yes		
53	CCB - Canopy Steel	Yes	Yes	Yes		
54	Chemical Facility - Canopy Steel	Yes	Yes	Yes		
55	ACH Facility - Canopy Steel	Yes	Yes	Yes		
56	Sprinkler Fire Pipe , including Primer : Only in Blower Bldg	Yes	Yes	Yes		
57	Membrane Tank and CIP Tank Interior Coatings	Yes	Yes	Yes		
58	Electrical Conduit	$6,500	Yes	Yes		
59	HVAC Ductwork	Yes	Yes	Yes		
60	Bollards	Yes	Yes	Yes		
61	**Acknowledgement of the following Q/A:**	Yes	Yes	Yes		
62	Question: #10 - 09910- Please confirm that specification section 09910 is not required for this project. If so please confirm the location of the specified Pre-Stage Basin #2 Inlet Channel and Bypass Channel. Answer: Specification Section 09910 shall apply to new manhole Installations. Revisions will be issued in "For Construction" documents.	Yes	Yes	Yes		
63	Question: #11- 09983-At the 60% Cost Model the Chemical Containment Coatings was removed. Please confirm that the GMP is not to include specification section 09983- chemical containment coatings. Answer: GMP shall not include chemical containment coatings per 60% Cost model Coordination dated January, 2022. Specification Section 09983 will be removed in "For Construction" Submittal.	Yes	Yes	Yes		
64	Multiple Mobilizations	$33,950	Yes	Yes		
65	Additional Steel Prep to blast and coat	$53,860	Yes	Yes		
66	Concrete Surface Prep where coating are to be applied	Yes	Yes	Yes		
67	Temp protection and enclosure of work area	Yes	Yes	Yes		

Project Name: Chandler Reclaimed Water Interconnect Facility
Project No. WW1901.402

Work Category: **09A - Paintings and Coatings**

Date: 4/12/2022 Rev 6/1/2022

Recommended

	COMPANY INFORMATION	Revolution Industrial	PPC	JCPI	AIMS	Murphy Industrial Coating
		Brennen Pierson	Craig Paris	Larry Nuciforo	Tim Wilcox	Gilles Bussieres
		480-735-8521	480-588-7751	480-229-2976	480-486-9365	480-981-0185
		Bpierson@revolutioninindustrial.com	craigp@teamppc.com	lnuciforo@jpciservices.com	twilcox@aimscompanies.com	gilles@murphy.ac
	TOTAL WORK CATEGORY PACKAGE VALUE	**$624,479**	**$761,684**	**$1,272,907**	**DECLINED**	**DECLINED**
68	Cleaning and Prep prior to coating	Yes	Yes	Yes		
69	Tlock repair at Manhole tie in	WC 02B	WC 02B	WC 02B		
70	Inspections of all items primed by others	Yes	Yes	Yes		
71	Provide floor protection and cleanup required for this scope of work	Yes	Yes	Yes		
72	Mock ups as a part of work	Yes	Yes	Yes		
73	Pipe Identification Markers	Yes	Yes	Yes		
74	Independent 3rd Party NACE Inspections	$16,800	$16,800	$16,800		
75	Touch up prior to Final turn over	Yes	Yes	Yes		
76	After hours work	$25,000	$25,000	$25,000		
77	Repair of Shop Coatings done by T&M	Yes	Yes	Yes		
78	Additional surface preparation	$15,000	$15,000	$15,000		
79	Coating Manufacture	PPG	Tnemec	Tnemec		
80	Coatings on Upper Membrane Canopy and Bridge Crane Steel	$52,959	$145,000	Included		
81	COVID-19 Scope Items					
82	Proposal includes CDC, Federal, State and Local OSHA guidelines for COVID-19.	Yes	Yes	Yes		
83	Your proposal shall include all productivity, schedule, and other impacts to cost and schedule.	Yes	Yes	Yes		
84	All personnel onsite must maintain 6'0" spacing between personel and shall have facemasks on at all times that align with CDC, Federal, State or Local OSHA guidelines for COVID-19.	Yes	Yes	Yes		
85	Any personnel reporting symptoms must be immediately reported to McCarthy and follow the apropriate testing and quarantine protocols.	Yes	Yes	Yes		
86						
87	End of Scope					
	Bond/CDI Cost	$81,454	$14,935	$31,047		
	TOTAL WORK CATEGORY PACKAGE VALUE	**$624,479**	**$761,684**	**$1,272,907**		

J P C I SERVICES

Joseph Painting Company, Inc.
4702 E. Virginia Street • Mesa, Arizona 85215-9101
(480) 986-1212 • Fax (480) 380-4461
License No. ROC197873 KE AZ • ROC199485 KE AZ • ROC242450 KE AZ • ROC218119 A AZ
ROC107144 CR34 AZ • CA Lic 280286 C-33 & A • NV Lic N0. 0058702-A15, No.0058579-C-4

PROPOSAL

TO: Nicole Azuri McCarthy — PHONE: FAX: CELL:

DATE: March 24, 2022

RE: Chandler Reclaimed Water Interconnect Facility Paint and Coatings Spec sections 09900, 09900.1, 09920, and 09983

We propose to complete the following work as described below;

ITEM # 1 **:** Raw water pump station perimeter wall painting by others (no system provided)
Item # 1 Amount .....

ITEM # 2 **:** Raw water pump station gates painting.
Item # 2 Amount $2,240.00

ITEM # 3 **:** Raw water pump station above ground piping painting.
Item # 3 Amount $30,673.00

ITEM # 4 **:** Raw water pump station wet well piping painting by others not included.
Item # 4 Amount .....

ITEM # 5 **:** Raw water pump station electrical canopy structure painting. Decking not included.
Item # 5 Amount $4,300.00

ITEM # 6 **:** Raw water pump station electrical equipment painting.
Item # 6 Amount $8,400.00

ITEM # 7 **:** Membrane facility basins (4) and CIP tank coating. Sherwin Williams system, Steel seam FT910, Macropoxy 5000 and Poly-Cote 115. Recommended alternate coating system Item #27
Item # 7 Amount $888,000.00

ITEM # 8 **:** Membrane facility Canopy structure painting. Decking not included,
Item # 8 Amount $25,292.00

ITEM # 9 **:** Membrane facility above ground piping painting.
Item # 9 Amount $52,580.00

ITEM # 10 **:** Membrane facility pumps not included.
Item # 10 Amount .....

ITEM # 11 **:** Membrane facility bridge Crain rails painting.
Item # 11 Amount $6,840.00

ITEM # 12 **:** Self cleaning strainers above ground piping and strainers painting.
Item # 12 Amount $35,424.00

ITEM # 13 **:** Self cleaning strainers canopy structure painting. Decking not included.
Item # 13 Amount $9,410.00

ITEM # 14 **:** AWRF modified chlorine contact piping painting.
Item # 14 Amount $5,040.00

ITEM # 15 **:** Blower building roll up door and man door painting.
Item # 15 Amount $1,450.00

ITEM # 16 **:** Blower building fire piping painting.
Item # 16 Amount $13,104.00

ITEM # 17 **:** MFS chemical facility sodium hypochlorite piping painting.
Item # 17 Amount $9,840.00

ITEM # 18 **:** CIP chemical facility piping painting.
Item # 18 Amount $25,088.00

ITEM # 19 **:** Chemical facility canopy structure painting. Decking not included.
Item # 19 Amount $18,533.00

ITEM # 20 **:** ACH facility above ground piping painting.
Item # 20 Amount $5,704.00

ITEM # 21 **:** ACH facility canopy structure painting. Decking not included.
Item # 21 Amount $7,788.00

ITEM # 22 **:** Electrical building doors painting.
Item # 22 Amount $800.00

ITEM # 23 **:** Coat interior of 2- 5' dia. By 20' deep manholes with Sewer Shield 150.
Item # 23 Amount $37,480.00

ITEM # 24 **:** Provide and install 1- 5' dia by 20' deep Sewer Shield Composites manhole.

Item # 24 Amount $21,000.00

ITEM # 25 **:** 3rd party NACE III inspections.
Item # 25 Amount $58,992.00

ITEM # 26 **:** Bond 2.5%
Item # 26 Amount $34,554.40

ITEM # 27 **:** Membrane facility basins (4) and CIP tank coating. Tnemec series 215 ML/22 mat reinforced epoxy mortar lining system, $488,400.00

Item # 27 Amount .....

Excluded; P.V.C. liner 09910, below grade waterproofing, exposed exterior above grade concrete, No FRP tank painting, No poly tank painting, Wet well coating, Canopy decking

TOTAL PROPOSAL AMOUNT: $1,302,532.40

***TPT TAX Paid on Materials at point of Purchase.**

The above proposal amount is based on a standard wages, 40 hours per week work schedule. Extended hours, weekend holiday work and Davis bacon wages will be an add to the contract amount. All work orders need to give JPCI Services a minimum of two weeks notice before the start of the project. Price valid for 90 days from date of proposal.

The cost of bonds, traffic control, bypass and permit fees are excluded from the above proposal. Please do not hesitate to call should you need more information.

Sincerely,

Larry Nuciforo
Estimator
Nace CCI Level 3 25089

If you accept this proposal, please complete the information requested below and fax to (480)380-4461, along with a

Accepted by: _____ Phone: _____

Job Superintendent: _____ Phone: _____

Estimated Start Date: _____ PO/Contract #: _____

Please notify Beckey Durfee at (480)986-1212 if there is a change in the start date.

BID PROPOSAL

Date 3/24/2022

Bid Proposal of * Penington Painting Company (hereinafter called "Bidder")

a ** limited liability corporation organized and existing under the laws of the State of

Arizona.

* Insert name of firm.
** Insert corporation, partnership, or individual, as applicable.

(INSERT OWNER'S ADDRESS)
TO: McCarthy Building Companies, Inc.
6225 North 24th Street, Suite 200
Phoenix, Arizona 85016

The Bidder, in compliance with your Invitation for Bids for the construction of Chandler Reclaimed Water Interconnect Facility having examined the Contract Documents entitled City of Chandler, Reclaimed Water Interconnect Facility Project, and other related documents and being familiar with the site of the proposed work, and with all of the conditions surrounding the construction of the proposed project including the availability of materials and labor, and the progress of work to date, if any, hereby proposes to furnish all labor, materials, tools, equipment, machinery, equipment rental, transportation, superintendence, perform all work, provide all services, and to construct all work in accordance with the Contract Documents set forth herein, and at the prices stated below. These prices are to cover all expenses incurred in performing the work required.

The Bidder shall attach a copy of Bidders' detailed estimate to its Bid Proposal. This estimate shall identify all quantities shown in the documents or anticipated along with corresponding labor, material and equipment pricing.

After Bid Proposals are received, tabulated, and evaluated by McCarthy, said Bidder agrees to meet with McCarthy for the purpose of determining any duplications, omissions, or mutually agreed bid adjustments. For these meetings, the Bidder agrees to provide a complete, detailed cost breakdown; a list of all sub-subcontractors proposed for use in the work; and a list of all items, materials and their manufacturers proposed for use in the work.

The Bidder, if awarded a Subcontract, agrees to commence work and to fully complete its Work in accordance with a schedule to be established in collaboration with McCarthy under the provisions of the Additional Subcontractor Conditions of the Specifications.

The Bidder acknowledges receipt of the following Addenda: 1

.

BASE BID:

The Bidder agrees to perform all painting and Coatings (herein insert the title of the Work Category as it appears in the Additional Subcontractor Conditions) Work for Work Category No. 09D, as described in the Contract Documents, for the Lump Sum of five hundred and forty four thousand, nine hundred and forty nine DOLLARS ($ 544,949).

BID BREAKDOWN:

Raw Water PS	$ 56,165
Membrane Facility/Strainer	$ 358,018
Chemical Facility	$ 100,261
Blower Building	$ 14,155
Electrical Building	$ 4,072
Site Work	$ 1,417
Performance & Payment Bond Cost *(If Applicable)*	$ 10,861
Total Subcontract Amount	$ 544,949

The name of the proposed Bonding Company is USI

Bond rate 2 %

All applicable taxes, except sales and use taxes on materials and equipment which are affixed and made a part of the real estate of the Project, are included in the above Base Bid. Bidder agrees that this Bid Proposal shall be good and may not be withdrawn unless McCarthy does not send Bidder a Subcontract within one hundred eighty (180) calendar days after the opening date of Bid Proposals.

(Amounts shall be shown in both words and figures. In case of discrepancy, the amount shown in words will govern.)

ALTERNATES:

The Bidder further agrees that if any or all of the Alternates listed and described below are incorporated and accepted within sixty (60) calendar days after receipt of a Subcontract from McCarthy, the Bidder will adjust its Subcontract by the amount indicated opposite the Alternates listed below.

ALTERNATE NO. 1: Canopy and Bridge Crane @ Membrane Facility:

ADD the sum of $ 145,000.

CHANGE ORDER RATES: (Add separate sheet as needed)

Markup % (on rates and material): 15%.

Position: N/A Rate: .

Equipment: 15% Rate: _____.

The Bidder understands that McCarthy reserves the right to reject any or all Bid Proposals and to waive any informalities or irregularities therein.

SELECT AS APPROPRIATE

☒ The Bidder has completed the Prequalification Form together with all other required data for McCarthy's' Contractor Default Insurance Program; OR

☐ The Bidder has not completed the Prequalification Form together with all other required data for McCarthy's' Contractor Default Insurance Program because the Bidder has provided the Form and all such information to McCarthy in the past 12 months for the following project:

Chandler RWIF Project, which bid on: 3/25/2022.

RESPONSIVE BID REQUIREMENTS:

DO NOT ENCLOSE YOUR STANDARD TERMS AND CONDITIONS

If any exceptions are taken to the requirements of this Proposal form, attach a separate sheet listing those exceptions, stating the sections and paragraphs and the specific exception.	(initials)
	JAH
In submitting this proposal, the Bidder certifies that this bid is valid for 180 calendar days.	(initials)
	JAH
In submitting this Proposal as described herein, we agree to complete the work in accordance with the included Preliminary Construction Sequence.	(initials)
	JAH
In submitting this Proposal, the Bidder certifies that all cost for extended warranties to start on the date of Substantial Completion is included.	(initials)
	JAH
In submitting this proposal as described herein, we confirm that we have received, reviewed and agree to all commercial terms stated in the McCarthy Subcontract and Purchase Order Agreement. Any exception taken to the commercial terms stated in these Agreements must be listed on a separate sheet noting the article or paragraph and the specific exception. ***Bidders attached Standard Terms and Conditions will not be acknowledged or accepted as part of any given bid.***	(initials)
	JAH
In submitting this proposal as described herein, the Bidder certifies that this bid is coordinated based on a complete set of documents and that there will be no claims for change order based on the assertion that the Bidder did not have a complete set of Bidding Documents.	(initials)
	JAH
In submitting this proposal, the Bidder certifies that they have included all spare parts, training, O & M Manuals, shop drawings and administration costs as associated to comply with the requirements of the specifications and as listed for their scope of work.	(initials)
A bid will be considered non-responsive if the Subcontractor Pre-Qualification Form is not completed as part of the Bid Form **(or on file at McCarthy office)**.	(initials)
	JAH
The Bidder, by submitting their bid, represents that they have read and understand the scope requirements of the Bidding Documents.	(initials)
	JAH
The Bidder certifies that any proposed materials in this scope of work meet or exceeds the requirements stated in the specifications unless noted otherwise within this proposal.	(initials)
	JAH

The bidder certifies that the price listed in this bid is a firm Price through the final delivery of the materials proposed herein, and that no material escalation will be accepted as part of this proposal.	JAH (initials)

Within fifteen (10) days after receipt by the Bidder from McCarthy of the Subcontract or Purchase Order, the Bidder will execute and return to McCarthy said Subcontract or Purchase Order and if notified from McCarthy that Bidder is not to be enrolled in McCarthy's Contractor Default Insurance Program, deliver to McCarthy Performance and Labor and Material Payment Bonds for the Subcontract or a Supply Contract Bond for the Purchase Order, or the difference between the amount of the bid and such larger amount for which McCarthy may subcontract with another party to perform the work covered by said bid, together with all court costs, all attorney fees and all other expense of recovery, all of which shall not exceed the Bid Security attached in the amount of 15% of the bid, will become the property of McCarthy. The bonds shall name McCarthy as Obligee.

If an Individual:

Authorized Signature: _____

Name (print): _____

Email: _____

Business Address: _____

_____

If a Partnership:

Authorized Signature: _____

Name (print): _____

Email: _____

Authorized Signature: _____

Name (print): _____

Email: _____

Business Address: _____

_____

If a Corporation:

Authorized Signature: Clint Badger

Name (print): Clint Badger

Email: ClintB@TeamPPC.com

Title: Senior PM

Business Address: 6313 W Commonwealth Pl

Chandler AZ, 85226

Telephone 480.588.7751

Contractor License Number: 202733

General Liability Insurance Carrier (not the agent): USI

*Please attach a sample certificate of insurance and current W9 form to your bid.

Penington Painting Company

SOUTHWEST REGION
6313 West Commonwealth Place
Chandler, Arizona 85226

NORTHWEST REGION
22757 72nd Ave. South E-100
Kent, WA 98032

TOLL FREE: 844-209-5149
FAX: 844-209-5150
teamppc.com

PROPOSAL

To□	MCC□RTH□ □U□D□□ COMP□□□□S	D□te□	M□rch □□□□□□□□
□tte□t□o□□	□□co□e □□ur□	O□□ce□	□□dustr□□□
□ddress□	□□□□ □ □□□th Street Phoe□□□□□ □□□□□		

JOB NAME	JOB ADDRESS
Ch□□d□er RW□□ – □MP□	Mc□uee□ □□d □uee□ Cree□Rd□ Ch□□d□er□□□ □□□□□

PROPOSAL SUMMARY	AMOUNT
Raw Water PS:	□□□□□□
Membrane Facility/Strainer:	□□□□□□□
Chemical Facility:	□□□□□□□
Blower Building:	□□□□□□
Electrical Building:	□□□□□
Site Work:	□□□□□
Performance & Payment Bond Cost:	□□□□□□
09920 Coating Systems (Excludes Manhole Coatings): **09983 Vinyl Ester (Excludes per Q and A)**	□ □

□□se □d □□ou□t	□□□□□□□□
□fer□□tes C□□op□ □□d □r□□e Cr□□e □ Me□ □r□□e □□c□□□	□□□□□□□
Tot□□ □□□□□□□	**$689,949**

Th□□□ □ou □or □our □□terest □□ ***Penington Painting Company*** □or □our p□□□t□□□ □ co□t□□□ □eeds□ We □re p□e□sed to prese□t the □o□ow□□□ □□d □or ***Chandler RWIF – GMP2,*** □□sed o□ p□□□s □□d spec□□c□t□o□s d□ted ***March of 2022,*** □□d su□ject to the □o□ow□□□ □□c□us□o□s e□c□us□o□s □□d □u□□□c□t□o□s□

INCLUSIONS

- □ □□□sh p□□□t□□□ o□□□□o□e □rou□d p□p□□□ □□d □□□e□□□
- □ □□st□□□ □□d p□□□t□□□ o□su□□ er□ed p□p□□□
- □ □□□sh p□□□t□□□ o□structur□□stee□□□d □et□□dec□□□□ □□□□st□□□ □□d pr□ □□□ to □e □□stee□□□r□c□tor□
- □ P□□□t□□□ o□HM doors□r□□□ es□OHCD□□□□d S□d□□□ □ □te
- □ Se□ed co□crete per □rch□tectur□□roo□ □□□sh schedu□ □□d w□ter repe□□□ts o□ e□ter□or CMU
- □ T□e□ec Res□□ous □oor□□□ s□ssu□ed to □e □t M□S Che□ □c□□□□c□□t□ □□o spec□
- □ □□ts □□d Sc□□o□d□□□

EXCLUSIONS

- □ □□□□□ Co□t□□□ S□ste□s o□□□M□□ho□es
- □ □□□□□ □□c□uded spec per □ □□d □
- □ De□er□e□t o□p□□t co□ts□□□p□□t co□ts to □e □pp□ed □ success□□ upo□ co□p□et□□ o□su□str□tes
- □ Rep□□r o□tr□de d□□ □□e or de□c□e□c□es □□others

□□□□ W□Co□ □ o□we□th P□□ce□Ch□□d□er□□□ □□□□□□M□□□□□□□□□□□□□□□□□□www□Te□□ PPC□co□ □ROC□□□□□□□



Penington Painting Company

SOUTHWEST REGION
6313 West Commonwealth Place
Chandler, Arizona 85226

NORTHWEST REGION
22757 72nd Ave. South E-100
Kent, WA 98032

TOLL FREE: 844-209-5149
FAX: 844-209-5150
teamppc.com

□ P□□t□□□ o□□□ter□r □coust□c□□w□□p□□e□s

P□e□se co□t□ct □e d□rect□□ w□th □□□□ □uest□o□s or □urther c□□r□□c□t□ō□ □ou □ □□ □eed□ Th□□□ □ou □□□□□ □□d we □oo□ □orw□rd to the poss□□□t□ o□□eco□ □□□ □ □e□ □er o□□our te□□ □□d p□rt o□the success□u□co□p□et□ō□ o□the Ch□□d□r RW□ – □MP□ project□

S□□cere□□□

Craig Paris

□□ce Pres□de□t

Cr□□p□ Te□□ PPC□co□

□□□□ W□Co□ □ o□we□th P□□ce□Ch□□d□r□□□ □□□□□□M□□□□□□□□□□□□□□□□□□www□Te□□ PPC□co□ □ROC□□□□□□



Project Name: Chandler Reclaimed Water Interconnect Facility
Project No. WW1901.402

Work Category: **09B - Acoustical Paneling**

Date: 4/12/2022 Rev 6/1/2022

		Recommended				
COMPANY INFORMATION		**T-P Acoustics**	Pena Acoustics	AARA Construction	Kovach	Western Acoustics
		Kim Debacco	Jose Pena	Estimating Dept	Estimating Dept	Jason Lalonde
		(602) 390-0452	(623) 271-8257	(602) 397-7523	(4809) 926-9292	(480) 303-0056
		kim@tpacoustics.com	jpena@penaacoustics.com	phoenix.bids@flynncompanies.com	precon@kovach.net	bids@westernacoustics.com
TOTAL WORK CATEGORY PACKAGE VALUE		**$159,251**	**DECLINED**	**DECLINED**	**DECLINED**	**DECLINED**
MCCARTHY SUBCONTRACT & FRONT END TERMS						
1	Compliant with McCarthy Front Ends	No				
2	Bid Submitted on McCarthy Bid Form	n/a				
3	Bid Bond Included with Bid (if over $500k Sub/$1 Mil Supplier)	n/a				
4	Surety Company	Western Surety				
5	Surety AM Best Rating (Must be A- or Better)	Yes				
6	AM Best Financial Size X($500M to $750M) or higher	Yes				
7	Anticipated contract amount is less than the Federal UW Limit as listed on the Treasury Listing	Yes				
8	Bond/CDI Cost	1.295%				
9	Included Insurance Requirements (Per Matrix)	Yes				
10	GL Insurance Company Name	Travelers				
11	GL Insurance Carrier AM Best Rating (Must be A- or Better)	Yes				
12	PRL Insurance (If required by the Front Ends)	n/a				
13	Pollution Insurance (If required by the Front Ends)	n/a				
14	Tier 1 Approved	Yes				
15	Tier 2 Approved	No				
16	Safety Items:					
17	OSHA Recordable Incident Rate (Current)	0				
18	Agrees to comply with PPE requirements including 100% glove policy	Yes				
19	Acknowledges updated ladder policy (platform ladders)	Yes				
20	Task Hazard Analysis included for all tasks	Yes				
21	Tie-off above 6' required	Yes				
22	Includes Hoisting for Sub's Own Work Scope	Yes				
23	Acknowledges Soils Report	n/a				
24	Acknowledges Addenda	Yes				
25	Hold Bid for 180 Days	Yes				
26	Pricing good for the duration of the project	Yes				
27	Sales Tax Included	No				
28	**Market Questions**					
29	Have you experienced and/or do you anticipate any issues with existing suppliers or vendors?	No				
30	Do you have any overseas suppliers that may be impeding your supply chain?	No				
31						
32	Per Plans & Specifications	Yes				
33	Division 1 as it relates to this scope of work	Yes				
34	01010 - Summary of Work	Yes				
35	01300 - Submittals	Yes				
36	01640 - Materials and Equipment	Yes				
37	07900 - Joint Sealers	Yes				
38	09714 - Metal Faced Acoustical Panels (DRAFT)	Yes				
Scope of Work						
Base Bid:		$139,345				

Project Name: Chandler Reclaimed Water Interconnect Facility
Project No. WW1901.402

Work Category: **09B - Acoustical Paneling**

Date: 4/12/2022 Rev 6/1/2022

Recommended

	COMPANY INFORMATION	T-P Acoustics	Pena Acoustics	AARA Construction	Kovach	Western Acoustics
		Kim Debacco	Jose Pena	Estimating Dept	Estimating Dept	Jason Lalonde
		(602) 390-0452	(623) 271-8257	(602) 397-7523	(4809) 926-9292	(480) 303-0056
		kim@tpacoustics.com	jpena@penaacoustics.com	phoenix.bids@flynncompanies.com	precon@kovach.net	bids@westernacoustics.com
	TOTAL WORK CATEGORY PACKAGE VALUE	**$159,251**	**DECLINED**	**DECLINED**	**DECLINED**	**DECLINED**
39	Provide all labor, materials, tools, equipment and appurtenances as required to perform the Work Category 09B - Acoustical Paneling Membrane Equipment System, in accordance with and reasonably inferable from the Contract Documents, complete and without exception unless otherwise noted below, including, but not limited to the following:	Yes				
40	Check to Spec completed and submitted to McCarthy	Yes				
41	Bid Held for how many days	Yes				
42	Cost Adder to hold to 180 days	n/a				
43	Fasten liner panels to structural purlins	Yes				
44	4'x4' acoustical panels mounted to liner panels in blower building	$17,870.00				
45	Furnish and install acoustical panels on walls where clearance allows	Yes				
46	Exclude wall insulation	Yes				
47	Provide all anchors and epoxy required for the installation of the equipment	WC 13C				
48	Provide own unloading, storage, and temporary protection	Yes				
49	COVID-19 Scope Items					
50	Proposal includes CDC, Federal, State and Local OSHA guidelines for COVID-19.	Yes				
51	Your proposal shall include all productivity, schedule, and other impacts to cost and schedule.	Yes				
52	All personnel onsite must maintain 6'0" spacing between personnel and shall have facemasks on at all times that align with CDC, Federal, State or Local OSHA guidelines for COVID-19.	Yes				
53	Any personnel reporting symptoms must be immediately reported to McCarthy and follow the appropriate testing and quarantine protocols.	Yes				
54						
55	End of Scope					
	Bond/CDI Cost	$2,036				
	TOTAL WORK CATEGORY PACKAGE VALUE	**$159,251**				

Project Name: Chandler Reclaimed Water Interconnect Facility
Project No. WW1901.402

Work Category: **11B - Inline Mixer**

Date: 4/12/2022 Rev 6/1/2022

		Recommended				
COMPANY INFORMATION		**Goble Sampson & Hayward Gordon**				
		Dan Bertschman				
		(610) 406-2309				
		dbertschman@goblesampson.com				
TOTAL WORK CATEGORY PACKAGE VALUE		**$61,582**				
MCCARTHY SUBCONTRACT & FRONT END TERMS						
1	Compliant with McCarthy Front Ends	Yes				
2	Bid Submitted on McCarthy Bid Form	Yes				
3	Bid Bond Included with Bid (if over $500K Sub/$1M Supplier)	n/a				
4	Surety Company	n/a				
5	Surety AM Best Rating (Must be A- or Better)	n/a				
6	AM Best Financial Size X($500M to $750M) or higher	n/a				
7	Anticipated contract amount is less than the Federal UW Limit as listed on the Treasury Listing	n/a				
8	Bond/CDI Cost	1.295%				
9	Included Insurance Requirements (Per Matrix)	Yes				
10	GL Insurance Company Name	Continental Casualty Company - MPR				
11	GL Insurance Carrier AM Best Rating (Must be A- or Better)	Yes				
12	PRL Insurance (If required by the Front Ends)	n/a				
13	Pollution Insurance (If required by the Front Ends)	n/a				
14	Tier 1 Approved	Yes				
15	Tier 2 Approved	No				
16	Safety Items:	Yes				
17	OSHA Recordable Incident Rate (Current)					
18	Agrees to comply with PPE requirements including 100% glove policy	Yes				
19	Acknowledges updated ladder policy (platform ladders)	Yes				
20	Task Hazard Analysis included for all tasks	Yes				
21	Tie-off above 6' required	Yes				
22	Includes Hoisting for Sub's Own Work Scope	n/a				
23	Acknowledges Soils Report	n/a				
24	Acknowledges Addenda	Yes				
25	Hold Bid for 180 Days	Yes				
26	Pricing good for the duration of the project	Yes				
27	Sales Tax Included	No				
28	**Market Questions**					
29	Have you experienced and/or do you anticipate any issues with existing suppliers or vendors?	No				
30	Do you have any overseas suppliers that may be impeding your supply chain?	No				
31						
32	Per Plans & Specifications	Yes				
33	Division 1 as it relates to this scope of work	Yes				
34	01010 - Summary of Work	Yes				
35	01300 - Submittals	Yes				
36	01640 - Materials and Equipment	Yes				
37	01650 - Starting of Systems	Yes				
38	01660 - Field Tests of Equipment	Yes				
39	01730 - Operation and Maintenance Data	Yes				
40	01750 - Spare Parts and Maintenance Materials	Yes				
41	01821 Instruction of Operations and Maintenance Personnel	Yes				
42	09900 - Painting	Yes				

Project Name: Chandler Reclaimed Water Interconnect Facility
Project No. WW1901.402

Work Category: **11B - Inline Mixer**

Date: 4/12/2022 Rev 6/1/2022

		Recommended				
COMPANY INFORMATION		**Goble Sampson & Hayward Gordon**				
		Dan Bertschman				
		(610) 406-2309				
		dbertschman@goblesampson.com				
TOTAL WORK CATEGORY PACKAGE VALUE		**$61,582**				
43	11220 - Inline Rapid Mixers	Yes				
44	16225 - Electric Motors 250 Horsepower or Less	Yes				
Scope of Work						
Base Bid:		$59,675				
45	Provide all labor, materials, tools, equipment and appurtenances as required to perform the Work Category 11B - Inline Rapid Mixers, in accordance with and reasonably inferable from the Contract Documents, complete and without exception unless otherwise noted below, including, but not limited to the following:	Yes				
46	Check to Spec completed and submitted to McCarthy	Yes				
47	Acceptable Manufacturer: **Hayward Gordon,** or approved equal.	Hayward Gordon				
48	Inline Rapid Mixer: **TAG: MIX-ILM-100**	Yes				
49	Pipe Diameter: 24-inches	Yes				
50	Flow Rate: 10 MGD	Yes				
51	System Pressure: 50 PSI	Yes				
52	two (2) opposed pitched blade turbine impellers, min impeller diameter 13-inches, 450RPM	Yes				
53	Materials:	Yes				
54	Gear Reducer: close-grained cast iron, stress relieved and reinforced	Yes				
55	Impeller Shaft: 1-piece, 316 SST	Yes				
56	Output Shaft: 316 SST	Yes				
57	Output Coupling: 316 SST	Yes				
58	Mixer Vessel: 316 SST	Yes				
59	Straightening Vanes: 316 SST	Yes				
60	Ring Baffle: 316 SST	Yes				
61	Speed Reducer:	Yes				
62	Max noise level: 85 dBA at 3-feet away from drive	Yes				
63	System Responsibility of gear box by mixer mfg. to include design, manufacturer, testing, and warranty.	No				
64	Solid oversized upper vertical parallel shaft design, totally enclosed	Yes				
65	Gears: double or triple reduction, helical and/or spiral bevel, AGMA No. 10 or better (AGMA 390.03)	Yes				
66	Bearings: ball or roller anti-friction, oil or grease lubricated, thrust bearing independent designed to carry 125% of shaft and impeller loads, AFBMA B-10 min life of 100,000 hours	Yes				
67	Lubrication: oil pump or oil splash, pump system include external filter, sight glass/level indicator, magnetic drain plug	Yes				
68	Gearbox Shaft: 8,000 psi max stress at max load	Yes				
69	Case: removable cover, lighting lugs, stress relieved and reinforced	No				
70	Impeller Shaft: overhung design, 9,000 psi max stress at max load, 1-piece, min diameter 2.5"	Yes				
71	Shaft Seal: John Crane type 32 dry running mechanical seal, vent port with ball valve	Yes				
72	Motor: squirrel cage induction type, 460V/3ph/60Hz, Class H insulation, Class B temp rise of 50-degrees C, OSHA approved coupling guard, synchronous speed 1,800 RPM	No				
73	Mounting: saddle type foot support. Lifting lug on both sides of drive flange. No deflection in piping system.	Yes				
74	Baffles: flow straightening vanes and one (1) ring baffle	Yes				
75	Shop Painting: Per Spec. SSPC-SP1 surface prep, mfg. standard rust inhibitive primer.	Yes				

Project Name: Chandler Reclaimed Water Interconnect Facility
Project No. WW1901.402

Work Category: **11B - Inline Mixer**

Date: 4/12/2022 Rev 6/1/2022

		Recommended				
COMPANY INFORMATION		**Goble Sampson & Hayward Gordon**				
		Dan Bertschman				
		(610) 406-2309				
		dbertschman@goblesampson.com				
TOTAL WORK CATEGORY PACKAGE VALUE		**$61,582**				
76	Provide all anchors per requirement of Section 05051, and epoxy required for the installation of the equipment	$1,120				
77	Warranty: 12 months after start-up	Yes				
78	Shipping shall be FOB jobsite	Yes				
79	Unloading & storage	n/a				
80	Temporary protection & enclosure	n/a				
81	Preventative maintenance	n/a				
82	O&M's per specification section 01781	Yes				
83	Training: minimum 1 trip - 1 person days	Yes				
84	Spare Parts per the Specifications	Yes				
85	Manufactures Services: as required for installation assistance & inspection, 1 trip - 1 day onsite for Pre-Operational Testing, 1 trip - 1 day onsite for start-up testing, 1 trip - 1 day for operations and maintenance training	Yes				
86	Delivery Lead Times: after submittal approval and released for fabrication.	18-weeks				
87	COVID-19 Scope Items					
88	Proposal includes CDC, Federal, State and Local OSHA guidelines for COVID-19.	Yes				
89	Your proposal shall include all productivity, schedule, and other impacts to cost and schedule.	Yes				
90	All personnel onsite must maintain 6'0" spacing between personnel and shall have facemasks on at all times that align with CDC, Federal, State or Local OSHA guidelines for COVID-19.	Yes				
91	Any personnel reporting symptoms must be immediately reported to McCarthy and follow the appropriate testing and quarantine protocols.	Yes				
92						
93	End of Scope					
	Bond/CDI Cost	$787				
	TOTAL WORK CATEGORY PACKAGE VALUE	**$61,582**				

Project Name: Chandler Reclaimed Water Interconnect Facility
Project No. WW1901.402

Work Category: **11C - Hydraulic Gates**

Date: 4/12/2022 Rev 6/1/2022

Recommended

COMPANY INFORMATION		**Goble Sampson & Golden Harvest**	Coombs Hopkins & Whipps	IES Southwest		
		Dan Bertschman	Jason Vernon	Joel Wade		
		(610) 406-2309	(602) 363-6755	(623) 760-5720		
		dbertschman@goblesampson.com	jason@chcwater.com	joel@iessouthwest.com		
TOTAL WORK CATEGORY PACKAGE VALUE		**$32,262**	**$33,833**	**PULLED BID**		
MCCARTHY SUBCONTRACT & FRONT END TERMS						
1	Compliant with McCarthy Front Ends	Yes	Yes			
2	Bid Submitted on McCarthy Bid Form	No	No			
3	Bid Bond Included with Bid (if over $500K Sub/$1M Supplier)	n/a	n/a			
4	Surety Company	n/a	n/a			
5	Surety AM Best Rating (Must be A- or Better)	n/a	n/a			
6	AM Best Financial Size X($500M to $750M) or higher	n/a	n/a			
7	Anticipated contract amount is less than the Federal UW Limit as listed on the Treasury Listing	n/a	n/a			
8	Bond/CDI Cost	1.295%	1.295%			
9	Included Insurance Requirements (Per Matrix)	Yes	Yes			
10	GL Insurance Company Name	American Fire and Casualty	Charter Oak Fire Insurance Company			
11	GL Insurance Carrier AM Best Rating (Must be A- or Better)	Yes	Yes			
12	PRL Insurance (If required by the Front Ends)	n/a	n/a			
13	Pollution Insurance (If required by the Front Ends)	n/a	n/a			
14	Tier 1 Approved	Draft	Yes			
15	Tier 2 Approved	No	No			
16	Safety Items:	Yes	Yes			
17	OSHA Recordable Incident Rate (Current)	n/a	n/a			
18	Agrees to comply with PPE requirements including 100% glove policy	Yes	Yes			
19	Acknowledges updated ladder policy (platform ladders)	Yes	Yes			
20	Task Hazard Analysis included for all tasks	Yes	Yes			
21	Tie-off above 6' required	Yes	Yes			
22	Includes Hoisting for Sub's Own Work Scope	n/a	n/a			
23	Acknowledges Soils Report	n/a	n/a			
24	Acknowledges Addenda	Yes	Yes			
25	Hold Bid for 180 Days	Yes	30 days			
26	Pricing good for the duration of the project	Yes	No			
27	Sales Tax Included	No	No			
28	**Market Questions**					
29	Have you experienced and/or do you anticipate any issues with existing suppliers or vendors?	No	No			
30	Do you have any overseas suppliers that may be impeding your supply chain?	No	No			
31						
32	Per Plans & Specifications	Yes	Yes			
33	Division 1 as it relates to this scope of work	Yes	Yes			
34	01010 - Summary of Work	Yes	Yes			
35	01300 - Submittals	Yes	Yes			
36	01640 - Materials and Equipment	Yes	Yes			
37	01650 - Starting of Systems	Yes	Yes			
38	01660 - Field Tests of Equipment	Yes	Yes			
39	01730 - Operation and Maintenance Data	Yes	Yes			
40	01750 - Spare Parts and Maintenance Materials	Yes	Yes			
41	01821 Instruction of Operations and Maintenance Personnel	Yes	Yes			
42	03300 - Cast-in-Place Concrete	Yes	Yes			

Project Name: Chandler Reclaimed Water Interconnect Facility
Project No. WW1901.402

Work Category: **11C - Hydraulic Gates**

Date: 4/12/2022 Rev 6/1/2022

Recommended

	COMPANY INFORMATION	**Goble Sampson & Golden Harvest**	Coombs Hopkins & Whipps	IES Southwest		
		Dan Bertschman	Jason Vernon	Joel Wade		
		(610) 406-2309	(602) 363-6755	(623) 760-5720		
		dbertschman@goblesampson.com	jason@chcwater.com	joel@iessouthwest.com		
	TOTAL WORK CATEGORY PACKAGE VALUE	**$32,262**	**$33,833**	**PULLED BID**		
43	03600 - Grout	Yes	Yes			
44	09900 - Painting	Yes	Yes			
45	11285 - Hydraulic Gates	Yes	Yes			
46	13447 - Electric Motor Actuators	Yes	Yes			
47	Division 16 - Electrical	Yes	Yes			
48	Division 17 - Instrumentation	Yes	Yes			
Scope of Work						
Base Bid:		$31,350	$32,900			
49	Provide all labor, materials, tools, equipment and appurtenances as required to perform the Work Category 11C - Hydraulic Gates, in accordance with and reasonably inferable from the Contract Documents, complete and without exception unless otherwise noted below, including, but not limited to the following:	Yes	Yes			
50	Check to Spec completed and submitted to McCarthy	Yes	Yes			
51	Acceptable Manufacturer: **Fontaine, Golden Harvest, Waterman, Whipps,** or approved equal	Golden Harvest	Whipps			
52	Hydraulic Gate: 24" x 24" with floor stand and electric motor operator: **TAG: EDR-RW-001**	Yes	Yes			
53	substantially watertight with leakage less than 0.5 GPM per foot of seating perimeter at design head	Yes	Yes			
54	Materials of Construction:	Yes	Yes			
55	ASTM A276, type 316 Stainless Steel, min thickness 1/4-inch: for frame, slide, slide stiffeners, rail, yoke, pedestals, wall brackets, and wall thimbles.	Yes	Yes			
56	ASTM A240 Stainless Steel: frame, top stiffener, vertical stiffener, center stiffener, seal landing, and seal retainer.	Yes	Yes			
57	ASTM B 584 Alloy 865 Bronze Casting: operating nut, thrust nut, and lift nut.	Yes	Yes			
58	Type 316 Stainless Steel: all bolts, studs, cap screws, and adjusting screws.	Yes	Yes			
59	Hexagon Heads: all bolts and nuts	Yes	Yes			
60	Disc: ASTM A276, type 316L Stainless Steel	Yes	Yes			
61	Deflection: 1/360 of the span, or 1/16 inch max at seal points, whichever is less.	Yes	Yes			
62	Extend reinforcing ribs into guides overlapping the seating surface of the guide.	Yes	Yes			
63	Disc sized to engage into guides a min of 1-inch on each side	Yes	Yes			
64	Weld stem mounting guides to the disc.	Yes	Yes			
65	Disc Guides: Type 316L Stainless Steel	Yes	Yes			
66	1-piece construction using formed plate, with gussets	Yes	Yes			
67	AWWA C5621 max rigidity	Yes	Yes			
68	Extend beneath the opening to completely support disc in fully open or closed position.	Yes	Yes			
69	Stem: Type 316 Stainless Steel, min diameter 1 1/2-inches	Yes	Yes			
70	Transmit in compression at least 2 1/2 times rated output of operating mechanism w/ 80 lb. effort on crank or handwheel.	Yes	Yes			
71	Critical buckling: Euler column formula C = 2	Yes	Yes			
72	Slenderness Ratio: (L/R) less than 200.	Yes	Yes			
73	Machined cut or rolled threads of the Acme type, surface roughness finish of 16 micro-inches or less.	Yes	Yes			
74	Connect stem to disc by means of a bolted connection w/min of two (2) attachment bolts.	Yes	Yes			
75	Lower Seals: Resilient neoprene seal on bottom of disc or guide frame	Yes	Yes			

Project Name: Chandler Reclaimed Water Interconnect Facility
Project No. WW1901.402

Work Category: **11C - Hydraulic Gates**

Date: 4/12/2022 Rev 6/1/2022

Recommended

	COMPANY INFORMATION	**Goble Sampson & Golden Harvest**	Coombs Hopkins & Whipps	IES Southwest		
		Dan Bertschman	Jason Vernon	Joel Wade		
		(610) 406-2309	(602) 363-6755	(623) 760-5720		
		dbertschman@goblesampson.com	jason@chcwater.com	joel@iessouthwest.com		
	TOTAL WORK CATEGORY PACKAGE VALUE	**$32,262**	**$33,833**	**PULLED BID**		
76	Seating surface shall have min width of 3/4-inch and extend beyond seating surface of the gate. Vertical face in contact with seating surface of the guide	Yes	Yes			
77	Side and Upper Seals: Ultra High Molecular Weight (UHMW) Polyethylene or Polymer	Yes	Yes			
78	Self-Adjusting, mechanically retained to lock seat in place.	Yes	Yes			
79	Stem Guides: adjustable in two directions.	Yes	Yes			
80	Anchor Bolts: Type 316 Stainless Steel	$300	$300			
81	shall be of ample size and strength for the intended purpose, and shall be furnished by the (gate) manufacturer. Conform to Spec Section 05051	Yes	Yes			
82	Stem Cover: Clear polycarbonate or butyrate plastic pipe stem cover.	Yes	Yes			
83	include cast aluminum adapter, gasketing and breathers, legible markings for gate position.	Yes	Yes			
84	Electric Operators: Per Spec Section 13447	Yes	Yes			
85	Identification: stainless steel manufacturer's nameplate	Yes	Yes			
86	Surface Preparation and Painting: Per Spec Sections 01640 and 09900	Yes	Yes			
87	Lubricants: Manufacturer to furnish food grade oil and grease meeting NSF 61, as required for initial operation.	$200	$200			
88	Shipping shall be FOB jobsite	Yes	Yes			
89	Unloading & storage	N/A	N/A			
90	Temporary protection & enclosure	N/A	N/A			
91	Preventative maintenance	N/A	N/A			
92	O&M's per specification section 01781	Yes	Yes			
93	Training: minimum 1 trips - 1/2person days	Yes	Yes			
94	Spare Parts per the Specifications: furnish two (2) sets of any special tools required for normal operation and maintenance.	Yes	Yes			
95	Manufactures Services: minimum 1 trip - 1 person days installation supervision, 1 trip - 4 person days dry wall installation inspection and operation,1 trip - 4 person days wet wall functional and leakage testing, 1 trip - 1/2 person day training and remaining startup.	No	No			
96	Delivery Lead Times: after submittal approval and released for fabrication.	12-18 weeks	11-13 weeks actuator shipped separately			
97	COVID-19 Scope Items					
98	Proposal includes CDC, Federal, State and Local OSHA guidelines for COVID-19.	Yes	Yes			
99	Your proposal shall include all productivity, schedule, and other impacts to cost and schedule.	Yes	Yes			
100	All personnel onsite must maintain 6'0" spacing between personnel and shall have facemasks on at all times that align with CDC, Federal, State or Local OSHA guidelines for COVID-19.	Yes	Yes			
101	Any personnel reporting symptoms must be immediately reported to McCarthy and follow the appropriate testing and quarantine protocols.	Yes	Yes			
102						
103	End of Scope					
	Bond/CDI Cost	$412	$433			
	TOTAL WORK CATEGORY PACKAGE VALUE	**$32,262**	**$33,833**			

April 5, 2022

To: Jason House/Nicole Azuri
McCarthy

Re: City of Chandler RWIF Project
FINAL Equipment Budget Pricing Summary **REV1**

Jason/Nicole,

The following FINAL budget pricing summary is provided by The Coombs-Hopkins Company for your City of Chandler RWIF project.

Spec Section	Equipment	Manufacturer	Price
11285	Slide Gate	Whipps	$32,900
11320	Inlet Auto Strainers	RP Adams	$495,000
13127	Alum Extruded Flat Covers	CST – **Material ONLY**	$499,900
13207	FRP Tanks	Daniel	$165,500

Please review this summary and give me a call if you have any questions or comments. I can be reached on my cell phone at (602) 363-6755. I look forward to working with you on this project.

Thanks,

Jason Vernon

Jason Vernon, P.E.
Coombs Hopkins Company

Lisa Snyders

Lisa Snyders, P.E.
Coombs Hopkins Company

RW GATE COMPANY

RW GATE COMPANY

79 102nd Street – Suite 100

TROY, NEW YORK 12180

OFFICE: 518-874-4750

FAX: 518-274-0210

WEBSITE: www.rwgate.com

QUOTATION

March 11, 2022

To: Bidding Contractors **Quotation #QT01022614**

Project: Chandler, AZ – Reclaimed Water Interconnect Facility Project
Wilson Engineering
Bid Date: March 23, 2022

Dear Estimator:

Following is our quotation for **Section 11285 – HYDRAULIC GATES** on the referenced project. Our offering is as follows:

Item No. 01 – Raw Water Pump Station Intake
Qty. - Size: One (1) Model RW750-S Slide Gate - 24" wide x 24" tall
Distance from the Invert of the Opening to the Operating Floor: 11'
Design Seating Head / Design Unseating Head (invert to MWL): 6' / 6'
Dwg No.: M-1.04
Description: The AWWA C561 compliant, non-self-contained, upward-opening slide gate will be constructed of 316/316L stainless steel with self-adjusting adjusting UHMWPE side and top seals and an EPDM flush bottom invert seal. A single, rising, 316 stainless steel operating stem and clear plastic stem cover with mylar indicator strips will be provided.
Operating Mechanism: pedestal mounted, electric actuator (480v-3 phase power, open/close service)
Mounting Style: Gate frame will be wall surface mounted with 316 stainless steel adhesive anchors and non-shrink grout. Anchor studs, nuts and washers are included.

Item No. 02– FIELD SERVICE
One (1) trip consisting of one (1) day onsite.

TOTAL SELLING PRICE: $ 21,178.00

GENERAL: Our quotation is based on the plans and specifications and the description listed herein. Please review the quotation and advise our local representative, **Joel Wade of IE Southwest Associates at 315-697-3800,** if there are any discrepancies between the details on this quotation and the actual requirements. The pricing and deliveries listed in the body of the quotation will be held for 60 days from the bid date on Page 1.

RW Gate is ISO 9001:2015 certified. RW Gate complies with AIS and Buy American requirements.

INCLUDED: Submittal drawings, installation instructions and O&M manuals. Installation instructions will be forwarded with the equipment. Information will be sent electronically unless otherwise indicated by the customer.

EXCLUDED: The following items are specifically excluded; demolition, installation, field measurements, control panels, remote control stations, instrumentation, wiring, conduit, junction boxes, disconnects, wall thimbles, wall pipes, floor sleeves, concrete, grout, gaskets, mastic, lubricants, grating, hand rail, cover plates, epoxy for anchors and all taxes including local and state sales tax.

PAYMENT: Net 30 days. Please contact RW Gate prior to payment via credit card. An additional charge may be necessary when paying by credit card.

FREIGHT: Full freight to project site included. Please contact the factory if separate, partial shipments are necessary as a price adder may be required. Unloading will be the responsibility of others.

STANDARD DELIVERY: Submittal drawings will ship within 3-4 weeks of receipt of a purchase order. The gate assemblies will ship 12-16 weeks after receipt of approved submittal drawings. Electric actuators will ship direct to the project site from the original manufacturer 30-32 weeks after receipt of approved submittal drawings. Please contact our local representative for expedited or extended delivery dates.

FIELD SERVICE: Field service is included as item No. 02. If additional field service is required, please contact our local representative for revised pricing. Please provide a 3-week notice for field service.

Best Regards,

Stephen Payler

Stephen Payler RW
Gate Company
spayler@rwgate.com

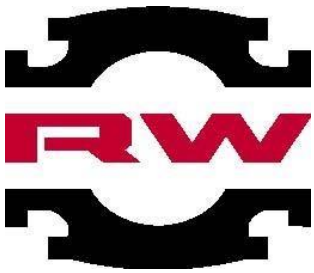

www.RWGATE.com

Project Name: Chandler Reclaimed Water Interconnect Facility
Project No. WW1901.402

Work Category: **11D - Submersible Pumps**

Date: 4/12/2022 Rev 6/1/2022

Recommended

	COMPANY INFORMATION	James, Cooke, Hobson & Flygt	Phoenix Pumps & Sulzer	DXP Enterprises & KSB		
		Ed Martin	Sam McFadden	Tony Kinsey		
		(602) 243-0585	(602) 726-8470	(480) 294-1294		
		egm@jchinc.com	smcfadden@phoenixpumps.com	tony.kinsey@dxpe.com		
	TOTAL WORK CATEGORY PACKAGE VALUE	**$232,911**	**$133,689**	**$239,239**		
	MCCARTHY SUBCONTRACT & FRONT END TERMS					
1	Compliant with McCarthy Front Ends	Yes	Yes	Yes		
2	Bid Submitted on McCarthy Bid Form	Yes	Yes	Yes		
3	Bid Bond Included with Bid (if over $500K Sub/$1M Supplier)	n/a	n/a	n/a		
4	Surety Company	n/a	n/a	n/a		
5	Surety AM Best Rating (Must be A- or Better)	n/a	n/a	n/a		
6	AM Best Financial Size X($500M to $750M) or higher	n/a	n/a	n/a		
7	Anticipated contract amount is less than the Federal UW Limit as listed on the Treasury Listing	n/a	n/a	n/a		
8	Bond/CDI Cost	1.295%	1.295%	1.295%		
9	Included Insurance Requirements (Per Matrix)	Yes	Yes	Yes		
10	GL Insurance Company Name	Cincinnati Casualty Company	The Charter Oak Fire Ins. Co	n/a		
11	GL Insurance Carrier AM Best Rating (Must be A- or Better)	Yes	Yes	Yes		
12	PRL Insurance (If required by the Front Ends)	n/a	n/a	n/a		
13	Pollution Insurance (If required by the Front Ends)	n/a	n/a	n/a		
14	Tier 1 Approved	Expired	Draft	Draft		
15	Tier 2 Approved	No	No	No		
16	Safety Items:	Yes	Yes	Yes		
17	OSHA Recordable Incident Rate (Current)	n/a	n/a	n/a		
18	Agrees to comply with PPE requirements including 100% glove policy	Yes	Yes	Yes		
19	Acknowledges updated ladder policy (platform ladders)	Yes	Yes	Yes		
20	Task Hazard Analysis included for all tasks	Yes	Yes	Yes		
21	Tie-off above 6' required	Yes	Yes	Yes		
22	Includes Hoisting for Sub's Own Work Scope	n/a	n/a	n/a		
23	Acknowledges Soils Report	n/a	n/a	n/a		
24	Acknowledges Addenda	Yes	Yes	Yes		
25	Hold Bid for 180 Days	Yes	Yes	Yes		
26	Pricing good for the duration of the project	Yes	Yes	Yes		
27	Sales Tax Included	No	No	No		
28	**Market Questions**					
29	Have you experienced and/or do you anticipate any issues with existing suppliers or vendors?	No	No	No		
30	Do you have any overseas suppliers that may be impeding your supply chain?	No	No	No		
31						
32	Per Plans & Specifications	Yes	Yes	Yes		
33	Division 1 as it relates to this scope of work	Yes	Yes	Yes		
34	01010 - Summary of Work	Yes	Yes	Yes		
35	01300 - Submittals	Yes	Yes	Yes		
36	01640 - Materials and Equipment	Yes	Yes	Yes		
37	01650 - Starting of Systems	Yes	Yes	Yes		
38	01660 - Field Tests of Equipment	Yes	Yes	Yes		
39	01730 - Operation and Maintenance Data	Yes	Yes	Yes		
40	01750 - Spare Parts and Maintenance Materials	Yes	Yes	Yes		
41	01821 Instruction of Operations and Maintenance Personnel	Yes	Yes	Yes		
42	05500 - Metal Fabrications	Yes	Yes	Yes		

Project Name: Chandler Reclaimed Water Interconnect Facility
Project No. WW1901.402

Work Category: **11D - Submersible Pumps**

Date: 4/12/2022 Rev 6/1/2022

Recommended

	COMPANY INFORMATION	James, Cooke, Hobson & Flygt	Phoenix Pumps & Sulzer	DXP Enterprises & KSB		
		Ed Martin	Sam McFadden	Tony Kinsey		
		(602) 243-0585	(602) 726-8470	(480) 294-1294		
		egm@jchinc.com	smcfadden@phoenixpumps.com	tony.kinsey@dxpe.com		
	TOTAL WORK CATEGORY PACKAGE VALUE	**$232,911**	**$133,689**	**$239,239**		
43	09900 - Painting	Yes	Yes	Yes		
44	11311 - Submersible Pumps	Yes	Yes	Yes		
45	16225 - Electric Motors 250 Horsepower or Less	Yes	Yes	Yes		
Scope of Work						
Base Bid:		$227,953	$130,000	$234,200		
46	Provide all labor, materials, tools, equipment and appurtenances as required to perform the Work Category 11D - Submersible Pumps, in accordance with and reasonably inferable from the Contract Documents, complete and without exception unless otherwise noted below, including, but not limited to the following:	Yes	Yes	Yes		
47	Check to Spec completed and submitted to McCarthy	Yes	Yes	Yes		
48	Complete assemblies, including motor, cable, and all accessories shall be listed and approved by the Nationally Recognized Testing Laboratories (NRTL).	Yes	Yes	Yes		
49	Acceptable Manufacturers: **ITT Flygt, KSB, Sulzer**, or approved equal	ITT Flygt	Sulzer	KSB		
50	**TAG: PMP-RW-100, PMP-RW-200, PMP-RW-300**	Yes	Yes	Yes		
51	4,000 GPM @ 50' TDH and along the following curve:	Yes	No	Yes		
52	3,473 GPM @ 47' TDH	Yes	Yes	Yes		
53	2,500 GPM @ 66' TDH	Yes	Yes	Yes		
54	3,250 GPM @ 63' TDH	Yes	Yes	Yes		
55	4,000 GPM @ 60' TDH	Yes	No	Yes		
56	Minimum overall pump efficiency at Rated Design Point: 80%	Yes	Yes	Yes		
57	Motor Efficiency: 91%	Yes	Yes	Yes		
58	Pump Efficiency at Rated Design Point: 80%	Yes	Yes	Yes		
59	Maximum Shutoff Head: 79'	Yes	Yes	Yes		
60	Maximum Motor HP - 60	Yes	No	Yes		
61	Maximum Speed: 1,200 RPM	Yes	Yes	Yes		
62	460V/3ph/60Hz	Yes	Yes	Yes		
63	Minimum Solids Size: 3"	Yes	Yes	Yes		
64	Minimum Power Cord Length: 100'	Yes	Yes	Yes		
65	Minimum Pump Discharge Size: 8"	Yes	Yes	Yes		
66	Heavy Duty, Electrical, Submersible, Centrifugal, Non-Clogging Impeller Pump designed for handling influent wastewater flow.	Yes	Yes	Yes		
67	Pump:	Yes	Yes	Yes		
68	Heavy Duty, Electrical, Submersible, Centrifugal, Non-Clogging Impeller Pump designed for handling influent wastewater flow.	Yes	Yes	Yes		
69	Cast Iron, ASTM A48, Class 35B	Yes	Yes	Yes		
70	Exposed nuts and bolts: AISI Type 316 SS	Yes	Yes	Yes		
71	Mating Surfaces with watertight sealing: nitrile or Viton rubber O-Rings	Yes	Yes	Yes		
72	Motor:	Yes	Yes	Yes		
73	squirrel cage induction shell-type design, air-filled watertight chamber	Yes	Yes	Yes		
74	Insulated with moisture resistant Class H insulation rated for 180-degrees Celsius. Winding fill factor of 95%	Yes	Yes	Yes		
75	minimum of 3 thermal switches to monitor stator temps.	Yes	Yes	Yes		
76	Leak and Over Temp protection system	Yes	Yes	Yes		
77	Explosion Proof Motors	Yes	Yes	Yes		
78	Cable Entry: watertight submersible water seal design	Yes	Yes	Yes		

Project Name: Chandler Reclaimed Water Interconnect Facility
Project No. WW1901.402

Work Category: **11D - Submersible Pumps**

Date: 4/12/2022 Rev 6/1/2022

Recommended

	COMPANY INFORMATION	James, Cooke, Hobson & Flygt	Phoenix Pumps & Sulzer	DXP Enterprises & KSB		
		Ed Martin	Sam McFadden	Tony Kinsey		
		(602) 243-0585	(602) 726-8470	(480) 294-1294		
		egm@jchinc.com	smcfadden@phoenixpumps.com	tony.kinsey@dxpe.com		
	TOTAL WORK CATEGORY PACKAGE VALUE	**$232,911**	**$133,689**	**$239,239**		
79	Junction Chamber: contains terminal board, sealed from motor by O-Ring seal and shall be field replaceable. Threaded compressed type binding post connections permanently affixed to terminal board.	Yes	Yes	Yes		
80	Shaft and Seals:	Yes	Yes	Yes		
81	pump shaft is an extension of the motor shaft, couplings are acceptable	Yes	Yes	Yes		
82	Carbon Steel ASTM A572, Grade 50, or Type 420 SST	Yes	Yes	Yes		
83	Tandem mechanical shaft seal, 2 totally independent seal assemblies. Tungsten Carbide rings	Yes	No	Yes		
84	Each interface held in contact with its own spring system. Cartridge seals are not acceptable	Yes	Yes	Yes		
85	Oil chamber for shaft sealing system, FDA approved non-toxic seal oil. Oil chamber to require no greater than 16 pints of oil.	Yes	Yes	Yes		
86	Bearings:	Yes	Yes	Yes		
87	Pump Shaft shall rotate on 2 permanently lubricated bearings.	Yes	Yes	Yes		
88	Upper Bearing: single roller bearing	Yes	Yes	Yes		
89	Lower Bearing: two row angular contact bearing	Yes	Yes	Yes		
90	Rated for 100,000 hours B-10 life.	Yes	Yes	Yes		
91	Impellers:	Yes	Yes	Yes		
92	grey cast iron, ASTM A48, Class 35B, dynamically balanced, double shrouded, non-clogging having long thrulet without acute turns, sliding fit to shaft with one key.	Yes	No	Yes		
93	single piece volute, non-concentric design	Yes	Yes	Yes		
94	Wearing Rings:	No	No	Yes		
95	sealing between volute and impeller, stationary ring made of Type 420 SST with minimum Brinell Hardness of 450 when tested according to ASTM E10, encased in Nitrile rubber	No	No	Yes		
96	Pumps shall also have SST impeller wear ring heat-shrink fitted onto the suction inlet of the impeller.	No	No	Yes		
97	Guide System:	Yes	Yes	Yes		
98	Guide Bars, lifting cable, and guide rail supports: Type 316 SST. Guide rail supports spaced at 8' max intervals.	Yes	Yes	Yes		
99	Pump Lifting Device: lifting eye, lifting device to accommodate pumps weighing up to 10,000 lbs. Lifting device will not increase pump height by more than 24"	No	No	No		
100	Submersible Cable:	Yes	Yes	Yes		
101	From junction box to each pump, type SPC with Chloroprene jacket, insulated for 90-degree Celsius, non-wicking fillers, minimum length 100'	Yes	Yes	Yes		
102	Sized in accordance with NEC requirements, listed by recognizable testing agency or laboratory	Yes	Yes	Yes		
103	Covered with Ozone Resistant PVC cover.	Yes	Yes	Yes		
104	Shop Tests:	Yes	Yes	Yes		
105	Pump casings shall by hydrostatically tested to twice the discharge head or 1 1/2 times the shutoff head, whichever is greater.	Yes	Yes	Yes		
106	Running test: pump assembly shall be operated from 0 to max capacity as shown on approved curve. Results of test shall be shown in a plot of test curves showing head, flow, horsepower, efficiency, and current. Readings taken at a min of 5 evenly spaced capacity points including shut-off, design point and min head for which pump is designed to operate.	Yes	Yes	Yes		
107	Each test to be witnessed by Registered Professional Engineer (may be employee of the mfg.), and shall sign and seal all copies. Test in conformance with methods in Section A6 of AWWA E101.	Yes	Yes	Yes		
108	Warranty: 5-years or 10,000 hours under normal use, operation, and service.	Yes	No	Yes		
109	Provide structural and anchorage calculation	$1,500	$1,500	$1,500		

Project Name: Chandler Reclaimed Water Interconnect Facility
Project No. WW1901.402

Work Category: **11D - Submersible Pumps**

Date: 4/12/2022 Rev 6/1/2022

Recommended

	COMPANY INFORMATION	**James, Cooke, Hobson & Flygt**	Phoenix Pumps & Sulzer	DXP Enterprises & KSB		
		Ed Martin	Sam McFadden	Tony Kinsey		
		(602) 243-0585	(602) 726-8470	(480) 294-1294		
		egm@jchinc.com	smcfadden@phoenixpumps.com	tony.kinsey@dxpe.com		
	TOTAL WORK CATEGORY PACKAGE VALUE	**$232,911**	**$133,689**	**$239,239**		
110	Provide all anchors and epoxy required for the installation of the equipment	$480	$480	$480		
111	Pumps, motors, drives, frames, appurtenances, etc. shall receive shop primer and shop finish coating conforming to the requirements of Section 09900 - Painting. Certify in writing that shop primer and shop finish coating system conforms to the requirements of Section 09900 - Painting.	No	No	Yes		
112	Shipping shall be FOB jobsite	Yes	Yes	Yes		
113	Unloading & storage	n/a	n/a	n/a		
114	Temporary protection & enclosure	n/a	n/a	n/a		
115	Preventative maintenance	n/a	n/a	n/a		
116	O&M's per specification section 01781	Yes	Yes	Yes		
117	Training: minimum 1 trip - 1 person day	Yes	Yes	Yes		
118	Spare Parts: 1-set of wear rings, 1-set of gaskets, 1-set of bearings, 1-set of mechanical seals	Yes	Yes	Yes		
119	Manufactures Services: minimum 1 trip - 1 person days installation assistance/supervision, 1 trip - 1 person day installation inspection and start-up, 1 trip - 1 person day onsite for training. Manufacturer shall re-visit the site as often as necessary until all trouble is corrected and the installation is entirely satisfactory.	Yes	Yes	Yes		
120	Delivery Lead Times: after submittal approval and released for fabrication.	12-14 weeks	12 weeks	15-17 weeks		
121	COVID-19 Scope Items					
122	Proposal includes CDC, Federal, State and Local OSHA guidelines for COVID-19.	Yes	Yes	Yes		
123	Your proposal shall include all productivity, schedule, and other impacts to cost and schedule.	Yes	Yes	Yes		
124	All personnel onsite must maintain 6'0" spacing between personnel and shall have facemasks on at all times that align with CDC, Federal, State or Local OSHA guidelines for COVID-19.	Yes	Yes	Yes		
125	Any personnel reporting symptoms must be immediately reported to McCarthy and follow the appropriate testing and quarantine protocols.	Yes	Yes	Yes		
126						
127	End of Scope					
	Bond/CDI Cost	$2,978	$1,709	$3,059		
	TOTAL WORK CATEGORY PACKAGE VALUE	**$232,911**	**$133,689**	**$239,239**		

PHOENIX PUMPS, INC.

March 23rd, 2022

Proposal Project # P00500

McCarthy Building Companies
Jason House

RE: Chandler - RWIF

Jason,

Phoenix Pumps is pleased to offer the following items for the above project based on the Wilson Plans & Specifications (February 2022). We acknowledge Addendum 1.

SPECIFICATION SECTION 11311__SUBMERSIBLE PUMPS__

Qty 3) Sulzer ABS XFP 206J-CB2 Submersible Pumps. **Design Condition: 3,473 GPM @ 47 Ft TDH.** Cast Iron Construction. CB2 Non Clog Impeller Design. 58 HP, 1200 RPM, 3/60/460V Motor. 98ft Power Cable. 1U Performance Test, Seal Leak/Over Temp Relay (Installed in Control Panel by Others).

- Includes Guide Rail Assembly with Brackets, Guide Rails
- Includes Spare Parts

Price…… $130,000.00

Comments & Clarifications;

- Installation is by others
- Does not include controls, gauges or any other items not specifically listed above.
- Includes freight to jobsite, submittal data, O&M manuals, startup services.
- Prices are based on delivery of __20*__ weeks after receipt of approved submittals.
- *Due to market volatility, lead times will be reevaluated after release to production.
- Pricing is valid for 180 days.

SPECIFICATION SECTION 11217__SAMPLE PUMP__

Qty 1) Goulds-WT J5S Jet Pump. 1-1/4” Suction, 1” Discharge NPT Connections. 1/2 HP, 3500 RPM, ODP Motor. Includes one spare mechanical seal.

Price…… $3,000.00

Comments & Clarifications;

- Installation is by others
- Does not include controls, gauges or any other items not specifically listed above.
- Includes freight to jobsite, submittal data, O&M manuals, startup services.
- Prices are based on delivery of __12*__ weeks after receipt of approved submittals.
- *Due to market volatility, lead times will be reevaluated after release to production.
- Pricing is valid for 180 days.

PHOENIX PUMPS, INC.

Proposal Comments
This proposal is based on agreement to Phoenix Pumps Inc. (PPI) standard Terms & Conditions (T&C) included with this proposal as an attachment. Negotiating special T&Cs may impact sale price of this equipment. The following comments are supplemental to the attached T&Cs. Only the items listed above are included. Any applicable taxes will be added to quoted prices.
Validity. This proposal is valid for 30 days.
Delivery. Stated delivery times are estimated based on current inventories, typical transit times, and are subject to change.
Equipment Specifications. Any and all references to "contractor" in the specs do not apply to PPI and PPI assumes the role of the pump supplier only. PPI will not be responsible for any specification sections not provided at time of quote. Furthermore, PPI reserves the right to review additional specifications, change selections, their appropriate prices, etc., in order to address the complete plans and specifications for this project as they are made available. All work on installation, electrical, etc. is to be provided by others and is not included in this proposal.
Warranty. All manufacturers' standard warranties apply unless further agreements are made in writing. Warranties do not include removal or installation of the equipment. PPI is available for removal & installation of the equipment at our standard field service, travel time and per diem rates. Warranties do not include transportation charges. Warranty consideration will be initiated by a new Purchase Order from the customer before any evaluation begins. If the equipment is deemed covered under warranty, PPI will issue credit against the purchase order in an agreed upon amount.
Submittal Data. PPI will supply standard submittal data, i.e. dimensional, sectional, curve, paint spec, pump IOM, motor IOM, motor data. Additional documentation may be available for additional fee. Data sheets, drawings, and performance curves included with this proposal are not for official submittal. Final data sheets will be generated and submitted upon receipt of order.
Start-Up Services. Startup Services, if included, will require a minimum of 2 weeks' notice to schedule startup. The customer will provide written confirmation that the system is ready for startup including but not limited to witnesses, electrical supply, sufficient test liquid, completed piping system, etc. If PPI field service personnel travel to the jobsite and are not able to be started up the equipment because of lack of readiness on the customers part, rescheduled startup services will be charged at our standard field service, travel time and per diem rates and will require a new Purchase Order.

If you have any questions please do not hesitate to contact me. On behalf of PPI, I would like to thank you for this opportunity to offer our products on this project.

Sincerely,
Sam McFadden
Phoenix Pumps, Inc.
Direct (602) 726-8470
smcfadden@phoenixpumps.com

				Ea	Ext
Submersible Pumps					
3	Stocked: Model: Voltage: Operating Point:	Special Order K 250-403/806XNG -S 107.00hp 460V 3473.00 gpm @ 47.00 ft		$54,025.33	$162,076.00
3	Power Cable Length:	100			
3	Wear Rings	ss case wear ring / ss impeller wear			
3	Mech Seal	Standard Seal			
3	O Rings	Nitrile Rubber (NBR)			
3	Painting	Standard			
3	Pump Safe Relays	Qty 1 Module A w/ Qty 1 Module D - le			
Testing					
3	Hydraulic Performance	Witness HI Grade 1U		4,565.33	$13,696.00
INSTALL ACCESORIES				9,329.33	$27,988.00
3	Claw	10" x 10" WoWi			
3	Elbow	DN 10" x 10" WoWi Long			
3	KSB Lifting Bail	ductile iron			
	Guide Rail				
3	Upper Bracket	316 SS			
9	Intermediate	316 SS for 10 riser			
Spare Parts				$6,666.67	$20,000.00
3	Set Wear rings				
3	Set of Gaskets				
3	Set of Bearings				
3	Mechanical Seal				
Warranty					
3	Warranty	7 Year Pro-Rated Warranty		$1,365.33	$4,096.00
Labor					
3	3 days availability as covered in Work Category 11D description as wel			$1,111.11	$4,444.44

TOTAL	**$232,300.44**

Pos.no	Name
1	**Name: KRT K 250-403/806XNG-S IE3**
1.1	Centrifugal pump: KRT K 250-403/806XNG-S IE3

REFERENCE DATA

Date:	.....
Project:	.....
Type of equipment:	Waste water pumps
Application:	.....
Item-Nos.:	.....

INPUT

Nature of system:	Single pumps as parallel circuit
Quantity of pumps:	2 herein 1 standby
Required station total flow:	7,000 US g.p.m.
Total dynamic head:	47 ft
Static head :	0 ft
Temperature of fluid:	68 °F
Density of fluid:	64.29 lb/ft³
Viscosity of fluid:	1.077E-5 ft²/s
Solid size:	3 inch

SELECTION

Manufactured by:	KSB
Pump type:	KRT K 250-403/806XNG-S IE3
Nos of poles:	6
Impeller type:	Closed Multi channel impeller
Impeller diameter:	14.9 inch
Free passage:	4 3/16 inch
Discharge flange:	10 inch to suit CLASS 125 to ASME/ANSI B16.1
Type of installation:	Stationary wet-well installation

with double stainless steel guides.

END OF REFERENCE DATA

PERFORMANCE REQUIREMENTS

Furnished, shall be a total of 2 waste water non-clog submersible motor pump(s) 1 of them operating simultaneously. The nature of system is: Single pumps as parallel circuit.

The pump shall be designed to successfully operate at a rated duty point of 3500 US g.p.m. a 47.0 ft and shall be capable to operate within a range from 25.1 ft to 70.4 ft continuously. The shut-off head shall be at minimum 85.3 ft. The pump's nominal speed shall not exceed 1200 rpm.

The pumped media shall have a maximum temperature of 68 °F, a specific gravity of 64.29 lb and a viscosity of 1.077E-5 ft²/s. The minimum pump efficiency at the design point shall be no less than 77 %.

The pump's submersible dry squirrel cage electric motor shall be capable of operation at , thre (3) phase, 60 Hz service. The rated motor power shall not exceed 60 hp.

MATERIALS

The submersible pump shall be of at minimum, the following grades of materials:

Pump casing:	Grey cast iron EN-GJL-250 (A 48 Class 35B)
Casing wear ring	Grey cast iron EN-GJL-250 (A 48 Class 35B)
Discharge cover:	Grey cast iron EN-GJL-250 (A 48 Class 35B)
Shaft:	Stainless steel EN-1.4021+QT800 (A 276 Type 420)

2021/06/02 (Build 213), 32 bit R16.07.01 - 05-08-2021 ALL USA

Pos.no	Name

Shaft sleeve:	Stainless steel EN-1.4021+QT800 (A 276 Type 420)
Impeller:	Grey cast iron EN-GJL-250 (A 48 Class 35B)
Impeller wear ring	---
Bearing bracket:	Grey cast iron EN-GJL-250 (A 48 Class 35B)
Motor casing:	Grey cast iron EN-GJL-250 (A 48 Class 35B)
Cable sheath:	Waterproof synthetic rubber compound
Elastomer components:	Nitrile rubber (NBR)
Bolts. nuts:	Stainless steel A4 (EN-1.4571) (A 276 Type 316)

PUMP CONSTRUCTION
The pump shall be of submersible centrifugal, non-clog, single stage, volute casing, end suctio type capable of satisfying the specified performance requirements. The pump shall be designe as "back pull-out" such that the entire rotating assembly can be removed from the casing. The pump shall be suited for continuous operation in a submerged condition driven directly by a fu submersible dry squirrel cage induction motor. The impeller shall be fitted directly to the motor shaft.
The head-capacity curve shall have a single flow rate for each pumping head value and have continuously rising head characteristic from the specified design point to shut-off so as to ensure stability and control in both individual and/or parallel operation. The operating range of the pump, as specified, is defined by the maximum and minimum operating heads against which the pump will be required to operate. At no point on the pump's power demand curve between shut-off and the minimum operating head shall the pump's power demand exceed th rated power of the motor.

CASING
The pump shall have a volute casing with centerline discharge. The single piece pump casing shall be made of suitable thickness to allow for long pump life and to safely withstand the pressure at shut off head. The discharge nozzle shall be provided with integrally cast flange. Critical mating surfaces where watertight sealing is required shall be machined and fitted with rings. Fittings will be the result of controlled compression of rubber O-rings in two planes and ring contact of four sides without the requirement of a specific torque limit.
Rectangular cross-sectioned gaskets requiring specific torque limits to achieve compression shall not be considered as adequate or equal. No secondary sealing compounds, elliptical O-rings, grease or other devices shall be used.

WEAR RING
The pump shall be provided with a replaceable wear ring in the pump casing to insure efficien sealing between the volute and suction inlet of the impeller. It shall be firmly secured to prevei rotation or displacement.

IMPELLER
The impeller shall be of a centrifugal, closed, non-clogging design for high efficiency pumping industrial and municipal wastewater. It shall have vanes and be capable of handling solids of minimum 4 3/16 inch size, long fibres, sludge and other materials as may normally be found ir wastewater. Back vanes shall be provided to minimize axial loads and to propel solids away from the seal area.
The impellers lateral cavities shall be of ample size to protect against wear and clogging.
The impeller shall be a one piece casting of the material as specified. It shall be smooth, well finished, free from blowholes and imperfections, and be dynamically balanced. The impeller sl be securely fitted to the pump shaft in such a manner that it does not loosen or become detached if the pump is operated in the wrong direction as may happen by reversed flow or reversed motor connections

PUMP SHAFT

2021/06/02 (Build 213), 32 bit R16.07.01 - 05-08-2021 ALL USA

Pos.no	Name
	The pump/motor shaft shall be of stainless steel or be completely isolated from the pumped media through the use of a stainless steel shaft sleeve. Do not use carbon steel as a shaft material without using a stainless steel shaft sleeve. BEARINGS The shaft shall rotate on at minimum 2 / 1 antifriction bearings. The bearing system shall be adequately designed so as to be capable of handling all axial thrust loads plus any and all rad loads.. The pump shall be provided with re-lubrication ports for lubrication from external. SHAFT SEAL Each pump shall be provided with two totally independent, mechanical seals, installed in tandem, each with its own independent single spring system acting in a common direction. Th sealing shall not depend on the direction of rotation. The primary, impeller-side seal shall operate in a large flooded chamber formed by cast recesses in the impeller and backplate. The impeller-side seal shall be of bellows type mechanical seal. The primary and the secondary seal faces shall operate in a generously proportioned lubrican chamber that hydrodynamically lubricates the seal faces to allow for extended periods of dry-running operation without the need for external seal lubrication or cooling systems. The lubricant chamber liquid shall be an environmentally friendly and nontoxic. The seal face material of the primary seal shall be of at minimum Silicon Carbide versus Silicc Carbide (SiC/SiC) for excellent hardness and chemical resistance across the entire "pH" rang The secondary seal shall be of Carbon versus Silicon Carbide (Carbon/SiC). The seal faces must be of a solid material capable of being re-lapped. The seals shall require neither routine maintenance nor adjustment, but capable of being easily inspected and replaced. Mechanical seal metal parts shall be of CrNiMo-stainless steel. Seals shall be non-proprietary in design, and shall be available from another vendor in additio the pump manufacturer. Conventional double mechanical seals with a single or multiple springs acting in opposed direction, cartridge-type mechanical seals; seals with materials other than those specified; sha not be considered as adequate for this critical sealing area. BOLTS AND NUTS All nuts or bolts exposed to the pumped media shall be of stainless steel as specified. NAMEPLATE Each pump shall be provided with a stainless steel nameplate firmly attached to the pumping unit. It shall be clearly and durable inscribed with the manufacturer's name, year of manufactu pump-type, serial number, and principal rating data. For easy identification of the submerged pumping unit, a second equal nameplate shall be supplied along with its documentation for attachment outside the wet well. PROTECTIVE COATING All exterior metal surfaces of the pump shall be subject to following preparation and coating procedure except name plates, bright parts and stainless steel parts. The preparatory treatment of cast and welded components shall be accomplished in accordar to SSPC near white SP 10. The primer when using Zinc dust or Zinc phosphate base shall have a dry film thickness of no less than 1 1/2 mils (35 microns). An abrasion and shock-resistant, non porous 2 component epoxy resin base coating shall be used. It shall be resistant against many diluted acids and brines as well as grease, oil, solvent and seawater and specially suited for use in hydrous media. The solids content shall be not less than 82%.The shop-applied top coat shall have a dry film thickness of not less than 6 mil

2021/06/02 (Build 213), 32 bit R16.07.01 - 05-08-2021 ALL USA

Pos.no	Name
	(150 microns). The color shall be preferably Ultramarine Blue. Name plates shall be masked or removed prior to surface preparation and coating. Polished parts and surfaces (shafts, couplings) shall not be painted but preserved against corrosion. Th coating of stainless steel parts is not required but acceptable.
1.2	Installation type: S + guide cable ..
	INSTALLATION The pump shall be furnished with a double guide system to permit easy removal and reinstallation of the pump without the need for personnel to enter the wet well. The pump shall have a guide claw used to guide the pump into place on the discharge elbow. The claw shall be bolted to the pump and not form an integral part of the same.The discharge elbow of each pump shall be permanently installed in the wet well along with the discharge piping and be designed to receive the pump without the need to remove any bolts and nuts. T discharge elbow shall suit size 10 inch flange connection to ASME/ANSI B16.1, CLASS 125. Perfect sealing between the pump and its discharge elbow shall be accomplished by an O-rin seal. The moment created by the entire weight of the pump unit shall be utilized for sealing. N portion of the weight shall bear directly on the sump floor nor shall any portion of the pump weight be supported by the guides. Simple metal to metal sealings and/ or wedge type connection systems shall not be acceptable. The guide system shall be suitable for an installation depth of 15 ft (4.5 m) extending from the top of the pump well to the discharge elbow. It shall comprise of a bracket and a double stainless steel non-load bearing pre-stressed guides. The system shall function properly even the guides deviate from the vertical by up to +/- 5 degree. The bracket shall be provided with all accessories and bolts forming the upper support of the guides as well as intermediate supports where required for installation. Each pump shall be fitted with a stainless steel lifting chain of 8 ft (2,5 m) length with additiona lifting loops every 8 ft (2.5 m) to permit raising and lowering the pump from the wet well prope and safely. Materials: Discharge elbow : Grey cast iron EN-GJL-250 (A 48 Class 35B) Claw : Grey cast iron EN-GJL-250 (A 48 Class 35B) Bracket : Stainless steel EN-1.4571 (A 276 Type 316 Ti) Guides : Stainless steel EN-1.4401 (A 276 Type 316) Lifting device: : Stainless steel EN-1.4404 (A 276 Type 316L)
1.3	Motor: 806XNG IE3
	MOTOR The motor shall be three-phase, dry squirrel-cage induction type in design.The motor shall be be adequately sized and rated for continuous operation to at maximum a fluid temperature of 104 °F (40 °C). The motor housing shall be both air filled and watertight. Motor protection shall be at minimum IP 68. Allowable maximum submergence shall be not less than 100 ft (30 m). The motor shall be rated for supply voltage of 460 V and frequency of 60 Hz and accept voltage fluctuations as per range A of IEC 60034-1 (Supply voltage +/- 5 % supply frequency +/- 2 %). The motor shall be explosionproof to CSA. NEC, FM Class I, Div. 1, Gr. C+D. The motor shall be designed for a maximum of 10 number of starts per hour. The motor stator shall be wound using Class H monomer-free polyester resin insulation resulting in an overall motor rating of 311 °F (155 °C), Class H. The stator windings shall be Current-UV-Dip-Impregnated resulting in a winding fill factor of at least 95 %. The rotor bars and short circuit rings shall be made of cast aluminum. The motor and pump set complete shall be designed and manufactured by the same company. COOLING

2021/06/02 (Build 213), 32 bit R16.07.01 - 05-08-2021 ALL USA

Pos.no	Name
	The cooling system of the motor shall be suited for the intermittent mode of operation in wet well waste water applications, submerged or partially submerged, without damage. Motors containing di-electric oils used for motor cooling and/or bearing lubrication or motors where the the pumped media or externally provided fresh water is directed through the motor shell for cooling are not acceptable. ELECTRIC CABLE AND CABLE ENTRY All power and control cables shall be suitable for the flexible connection of the submersible pumps, sized in accordance with NEC, FM, IEC requirements and shall be Ozone, UV, weather, oil and water resistant. The conductors shall be made of finely-stranded copper to Class 5 of IEC 60228. Each conductor shall be insulated by ethylen-propylene-rubber (EPR). An inner sheath of rubber shall also be utilized. The cable outer sheath shall be water and oil-resistant and made of Neoprene. Each cable shall be rated for 600/1000 V and a maximum conductor temperature of 194 °F (90 °C). The power and control cables shall be of 33 ft (10 m) length. Each cable entry seal shall be rated for a submerged depth to 100 ft (30 m). A triple sealed cable entry design along with strain relief and a bend protection shall be provided. Firstly, the cable entry seal shall consist of a elastomer grommet compressed by two stainless steel washers, sealing the outside of the cable against the cable entry casing. Secondly, the entire end of the cable shall be sealed inside the cable entry housing through the use of a non-shrink epoxy resin. Thirdly, a monolithic dam formed by either solder on bare stripped section or by an inserted Copper bushing shall seal each individual cable lead making sure that no entry of moisture is possible into the high-voltage motor terminal area even if the cable is damaged or severed below water level. Cable entries providing only simple rubber grommet (external cable jacket) seals will not be accepted. If a triple sealed cable entry as described is not utilized in the pump's design, then the pump shall have installed a separate moisture sensor mounted in the separated terminal area to shut the pump down should moisture approach the high voltage terminal area. MOTOR THERMAL PROTECTION Temperature monitors shall be embedded in the motor windings for use in conjunction with and supplemental to external motor overload protection. These monitors shall be temperature sensitive PTC thermistors (temperature sensitive semi-conducting resistance devices with positive temperature coefficients). These monitors shall interface with the pump’s control and shall shut down the pump should high temperature be detected. The temperature monitors and control shall automatically reset once the motor temperature returns to normal. MOTOR HOUSING MOISTURE PROTECTION A moisture detector shall be mounted in the motor's stator cavity allowing a control panel mounted relay to de-energize the motor should leakage occur. SEAL LEAKAGE COLLECTION AND DETECTION The pump shall be furnished with a monitoring system to signal in the event either the upper or lower mechanical seal leaks. This monitoring system shall consist of a mechanical float switch located in a separate seal leakage collection chamber. The float switch shall be potential free with NC-contacts rated for 250 V AC and a current of not less than 1.5 A. The seal leakage monitoring and collection system shall be designed so that no seal leakage is allowed to penetrate into the pumps motor chamber or lower bearing assembly. Sealing of the bearing assembly shall be accomplished through the use of two rotary shaft seals in addition to the mechanical seals as described. BEARING TEMPERATURE MONITORING The lower thrust bearing shall be provided with a temperature monitor. This sensor shall be resistance type (RTD) with a linear relationship between temperature and resistance. Bearing temperature Alarm then Alarm Shutoff shall be accomplished at two separate preset temperature limits through the use of a PT 100 supervision relay mounted in the pump control panel.

2021/06/02 (Build 213), 32 bit R16.07.01 - 05-08-2021 ALL USA

Performance curve

Pump type KRT K 250-403/806XNG-S IE3

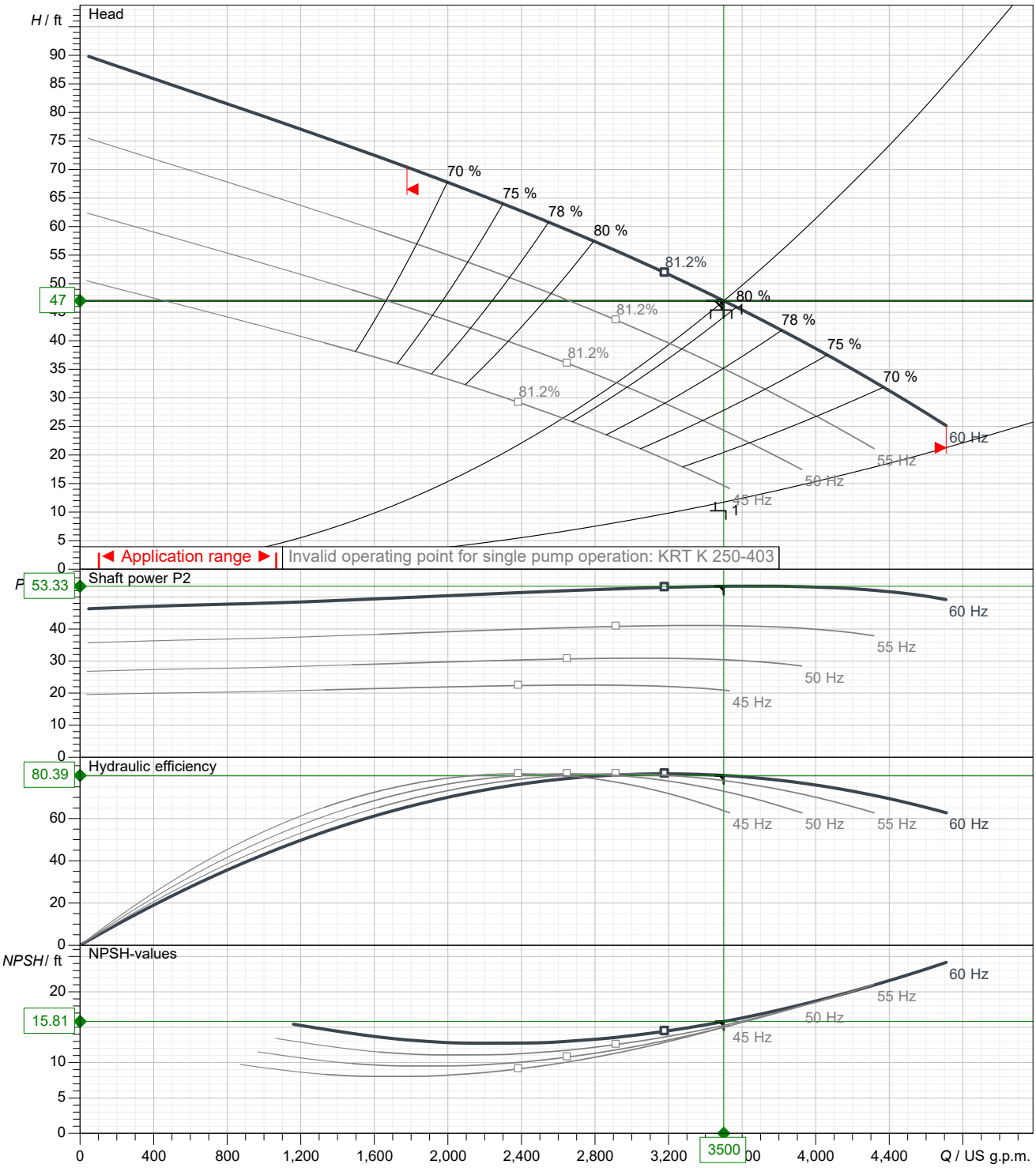

Impeller type	Multi channel impeller , Closed			Curve number	K43696 US/0
Free passage	4 3/16inch	Density of fluid	62.322 lb/ft³	Frequency	60 Hz
Impeller size	14 7/8inch	Viscosity	1.082E-5 ft²/s	Speed	1,191.9 1/min

2021/06/02 (Build 213), 32 bit R16.07.01 - 05-08-2021 ALL USA

Performance curve

Pump type KRT K 250-403/806XNG-S IE3

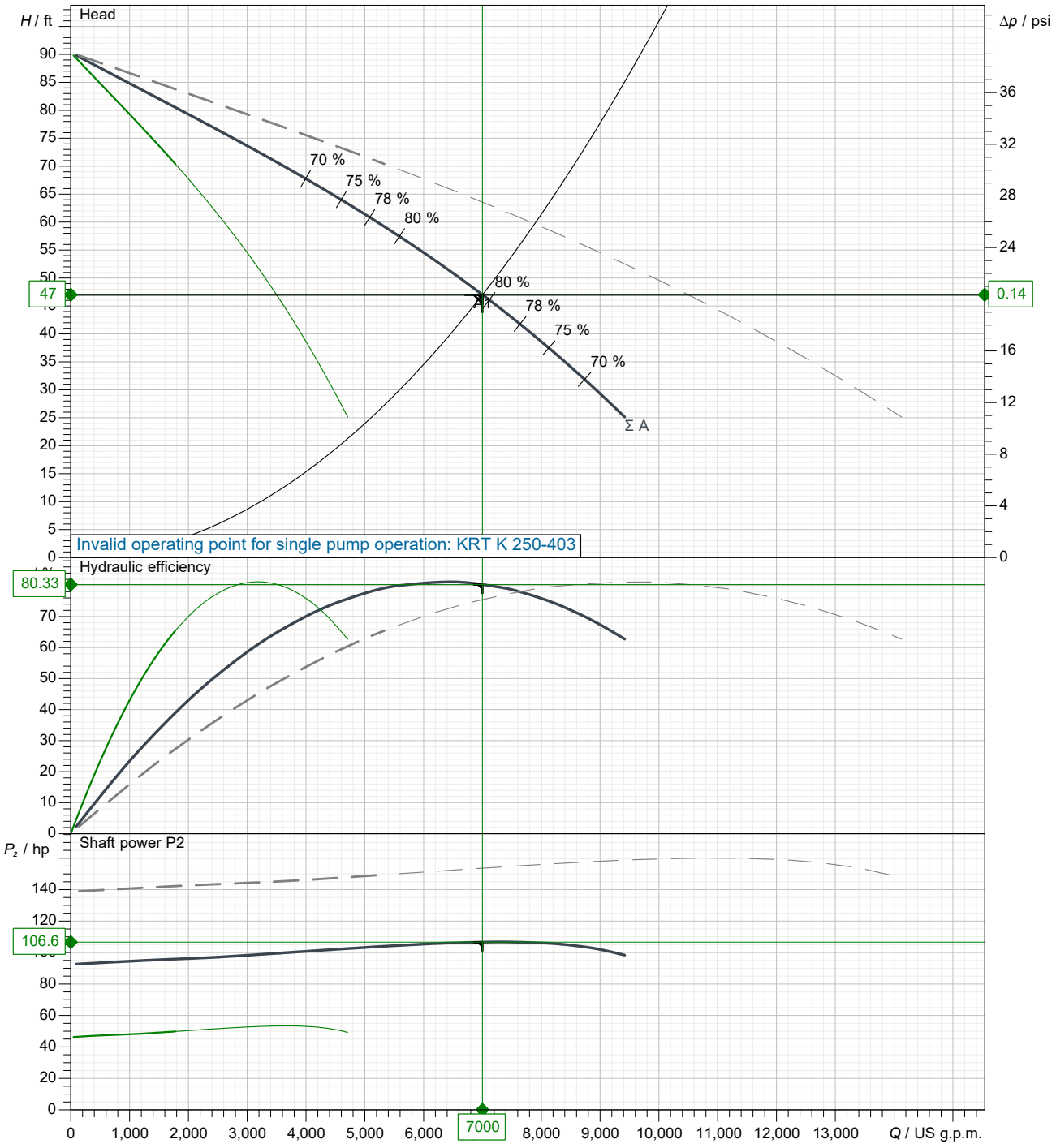

Impeller type	Multi channel impeller , Closed			Curve number	K43696 US/0
Free passage	4 3/16inch	Density of fluid	62.322 lb/ft³	Frequency	60 Hz
Impeller size	14 7/8inch	Viscosity	1.082E-5 ft²/s	Speed	1,191.9 1/min

2021/06/02 (Build 213), 32 bit R16.07.01 - 05-08-2021 ALL USA

Data sheet

Pump type KRT K 250-403/806XNG-S IE3

Operating data

Flow	3,500	US g.p.m.	Fluid			
Head	47	ft	Density of fluid	64.3	lb/ft³	
Operating speed	1,192	rpm	Viscosity	1.08E-5	ft²/s	
Shaft power	53.3	hp	Temperature	68	°F	
Efficiency	80.4	%	Hydraulic acceptance acc.	ANSI HI 2B		
Required pump NPSH	15.8	ft				
Head H(Q=0)	89.8	ft				
Application range	Head		Flow			
From	70.4	ft	1,780	US g.p.m.		
To	25.1	ft	4,710	US g.p.m.		

Design

Make	KSB	Impeller type	Multi channel impeller		
Design	Submersible pump		Closed		
Series	KRT K	Impeller size	(378)	14 7/8	inch
Frame size	250-403		Max. (408)	16 1/16	inch
Stages	1		Min. (330)	13	inch
Curve number	K43696 US/0	Free passage		4 3/16 inch	inch
		Weight		2,923.3	lb

Type of bearings	Antifriction		
Nos. of bearings	2 / 1		
Lubrication	Grease lubrication. regreasing without dismantling of pump		
Suction port	Pressure rating		--
	Flange size	DN0	---
	Flange size	DN1	10"
	Norm		--
Discharge port	Pressure rating		CLASS 125
	Flange size	DN2	10 inch
	Flange size	DN3	10 inch
	Norm		ASME/ANSI B16.1

Suction port: pump (DN1)
Discharge port: discharge elbow (DN3)

Materials

Pump casing	Grey cast iron EN-GJL-250 (A 48 Class 35B)
Discharge cover	Grey cast iron EN-GJL-250 (A 48 Class 35B)
Impeller	Grey cast iron EN-GJL-250 (A 48 Class 35B)
Shaft	Stainless steel EN-1.4021+QT800 (A 276 Type 420)
Bearing bracket	Grey cast iron EN-GJL-250 (A 48 Class 35B)
Motor casing	Grey cast iron EN-GJL-250 (A 48 Class 35B)
Bolts. nuts	Stainless steel A4 (EN-1.4571) (A 276 Type 316)
Shaft protection sleeve	Stainless steel EN-1.4021+QT800 (A 276 Type 420)
Casing wear ring	Grey cast iron EN-GJL-250 (A 48 Class 35B)
Impeller wear ring	---
O-Rings	Nitrile rubber (NBR)

2021/06/02 (Build 213), 32 bit R16.07.01 - 05-08-2021 ALL USA

KSB Inc., 4415 Sarellen Road, Richmond, Virginia 23231, Phone: 001-804-222-1818, Fax: 001-804-226-6961
KSB Pumps Inc, 5885 Kennedy Road, Mississauga, Ontario L4Z 2G3 (Canada), Phone: (0905) 568-9200, Fax: (0905) 568-9120
KSB SE & Co. KGaA, Turmstrasse 92, 06110 Halle (Germany), Phone +49 (345) 48260, Fax +49 (345) 4826 4699, www.ksb.com

Data sheet

Pump type KRT K 250-403/806XNG-S IE3

Shaft seal

Type of seal	Double mechanical seal
Arrangement:	Tandem
Seal on medium side	with elastomer bellows
Mechanical seal. pump-side	Silicon carbide / Silicon carbide
Mechanical seal. bearing-side	Carbon / Silicon carbide

Monitoring

Thermal winding protection	By temperature sensitive switches or PTC
Explosion proof protection	---
Motor housing monitoring	By conductive moisture sensor electrode
Mechanical seal leakage detection	By float switch
Bearing temperature monitoring	By PT 100 RTD

Coating

Preparatory treatment	SSPC near white SP 10
Blasting method	Steel grit blasting
Primer	Zinc phosphate or Zinc dust
Dry film thickness primer	> 1 1/2 mils (35 microns)
Top coat	2-component epoxy resin
Solids content	> 82 %
Dry film thickness top coat	> 6 mils (150 microns)
Color	Ultramarine Blue (RAL 5002 to DIN 6174)

Installation

INSTALLATION
Type of installation : Wet well installation designed for automatic connection to a permanently installed discharge elbow
Discharge elbow size (DN2/DN3) : 10 inch / 10 inch
Flange to suit : ASME/ANSI B16.1, CLASS 125
Claw : Bolted to the pump
Installation depth : 15 ft (4.5 m)
Guide system : Double pre-stressed guides
Guide max. deviation : +/- 5 degree from the vertical
Lifting device : stainless steel lifting chain
Length of lifting device: 33 ft (10 m)
Lifting loops : Every 8 ft (2.5 m)
Installation accessories : Discharge elbow, 10 inch / {P.PartNo[Co, GuideWire].Bend DN DS[Co];;;0}
fasteners, claw : bracket,
lifting chain
stainless steel guides
Materials : Discharge elbow : Grey cast iron EN-GJL-250 (A 48 Class 35B)
Claw : Grey cast iron EN-GJL-250 (A 48 Class 35B)
Bracket : {P.PartNo[Co,

2021/06/02 (Build 213), 32 bit R16.07.01 - 05-08-2021 ALL USA

Performance curve

Pump type KRT K 250-403/806XNG-S IE3

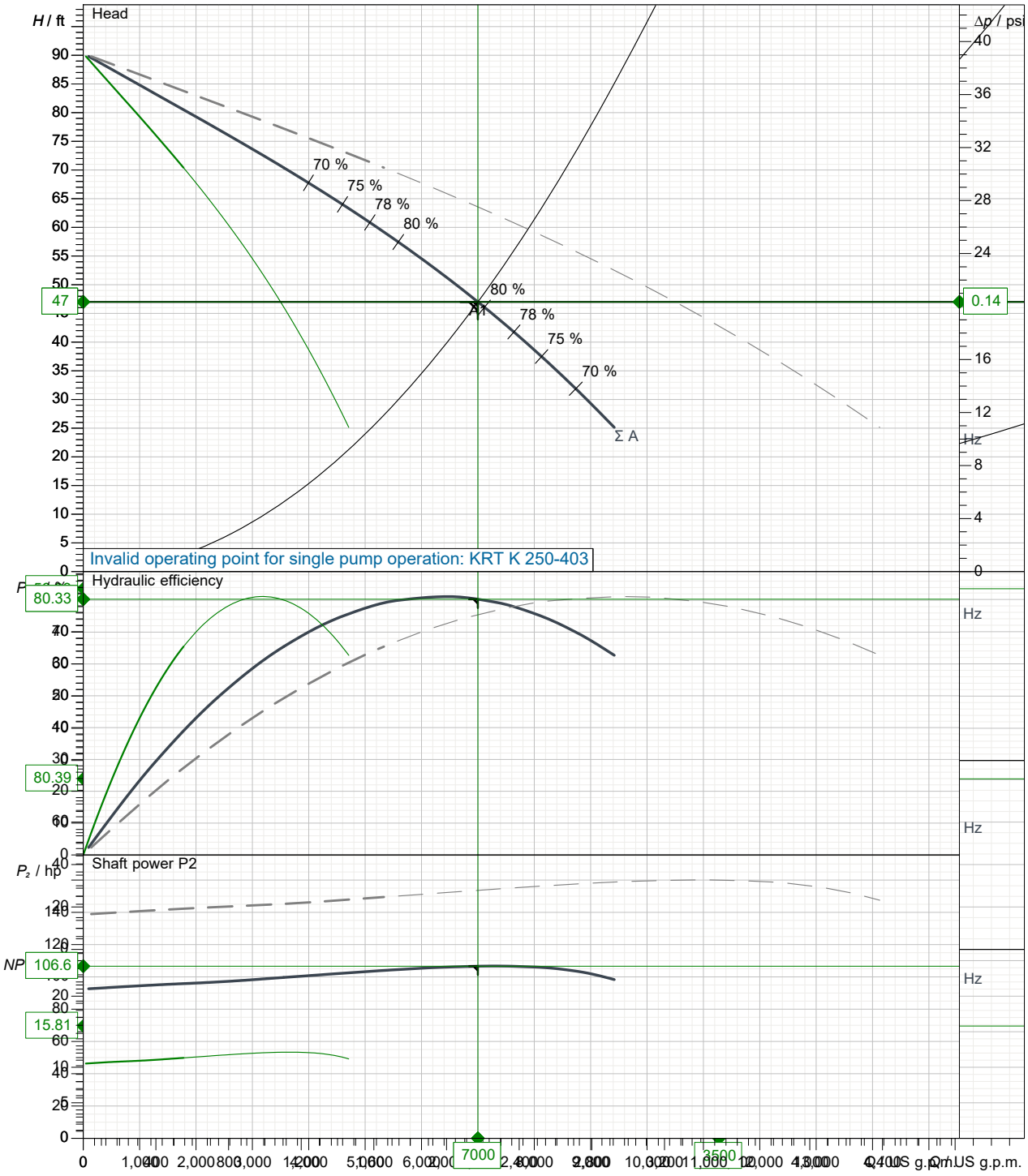

Impeller type	Multi channel impeller, Closed			Curve number	K43696 US/0
Free passage	4 3/16inch		Density of fluid	62.322 lb/ft³	Frequency	60 Hz
Impeller size	14 7/8inch	(378)	Viscosity	1.082E-5 ft²/s	Speed	1,192 1/min

ANSI HI 2B

2021/06/02 (Build 213), 32 bit R16.07.01 - 05-08-2021 ALIAUS/USA

Performance curve

Pump type KRT K 250-403/806XNG-S IE3

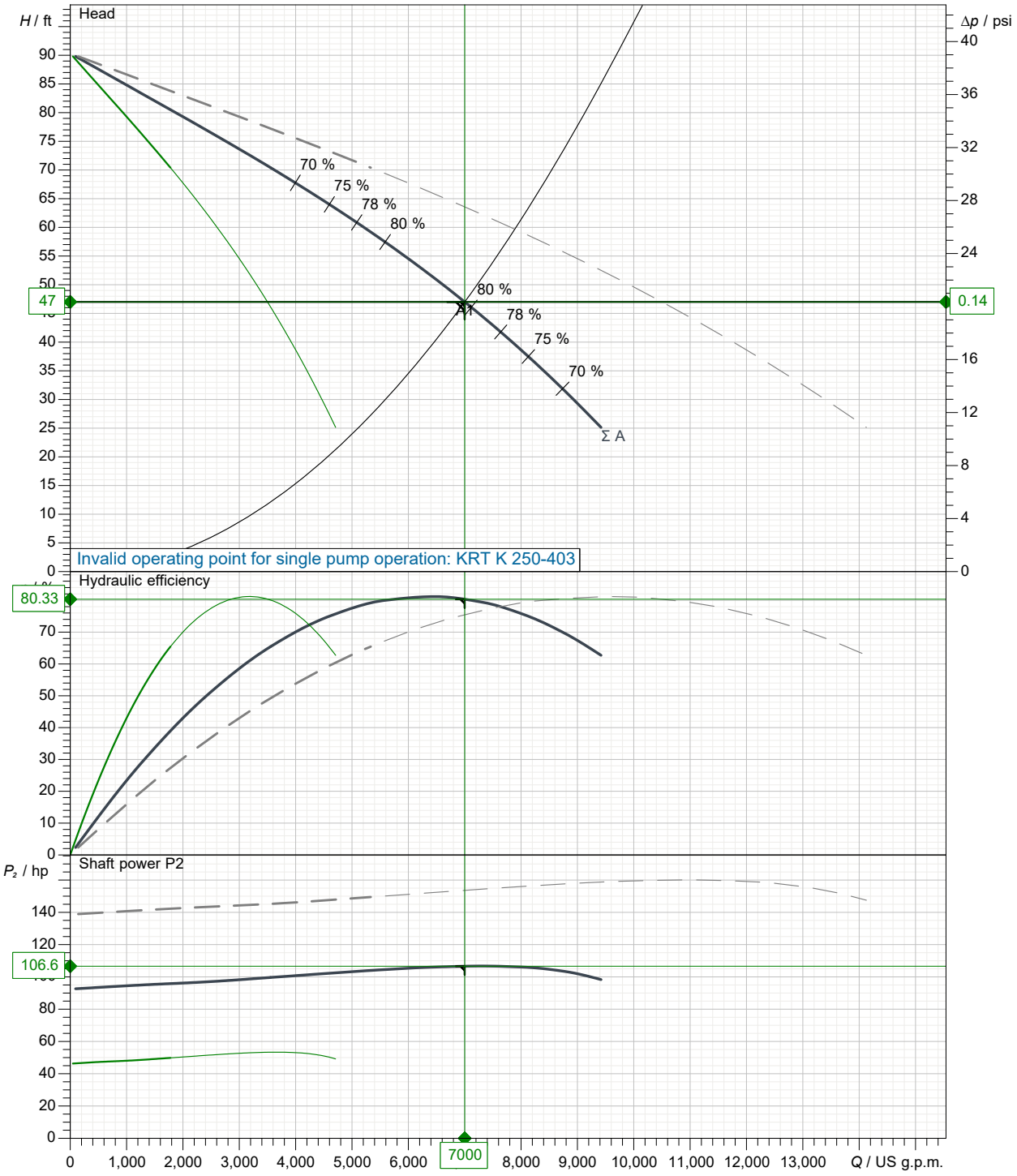

Impeller type	Multi channel impeller, Closed			Curve number	K43696 US/0
Free passage	4 3/16inch		Density of fluid	62.322 lb/ft³	Frequency	60 Hz
Impeller size	14 7/8inch	(378)	Viscosity	1.082E-5 ft²/s	Speed	1,192 1/min

ANSI HI 2B

2021/06/02 (Build 213), 32 bit R16.07.01 - 05-08-2021 ALL USA

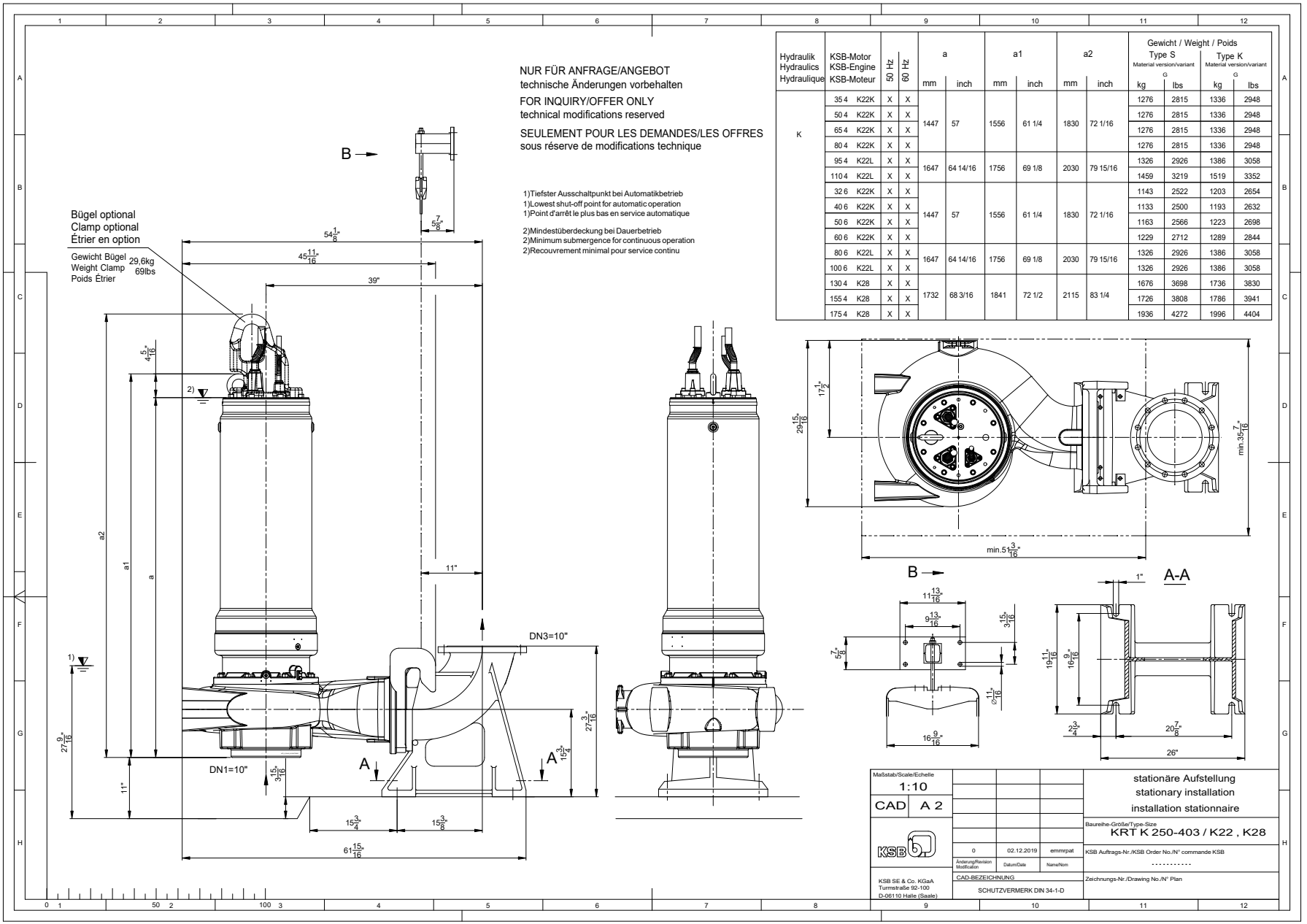

Hydraulik Hydraulics Hydraulique	KSB-Motor KSB-Engine KSB-Moteur	50 Hz	60 Hz	a mm	a inch	a1 mm	a1 inch	a2 mm	a2 inch	Gewicht / Weight / Poids Type S Material version/variant G kg	Type S G lbs	Type K Material version/variant G kg	Type K G lbs
K	35 4 K22K	X	X	1447	57	1556	61 1/4	1830	72 1/16	1276	2815	1336	2948
	50 4 K22K	X	X							1276	2815	1336	2948
	65 4 K22K	X	X							1276	2815	1336	2948
	80 4 K22K	X	X							1276	2815	1336	2948
	95 4 K22L	X	X	1647	64 14/16	1756	69 1/8	2030	79 15/16	1326	2926	1386	3058
	110 4 K22L	X	X							1459	3219	1519	3352
	32 6 K22K	X	X	1447	57	1556	61 1/4	1830	72 1/16	1143	2522	1203	2654
	40 6 K22K	X	X							1133	2500	1193	2632
	50 6 K22K	X	X							1163	2566	1223	2698
	60 6 K22K	X	X							1229	2712	1289	2844
	80 6 K22L	X	X	1647	64 14/16	1756	69 1/8	2030	79 15/16	1326	2926	1386	3058
	100 6 K22L	X	X							1326	2926	1386	3058
	130 4 K28	X	X	1732	68 3/16	1841	72 1/2	2115	83 1/4	1676	3698	1736	3830
	155 4 K28	X	X							1726	3808	1786	3941
	175 4 K28	X	X							1936	4272	1996	4404

Änderung/Revision Modification	Datum/Date	Name/Nom
0	02.12.2019	emmrpat

KSB Auftrags-Nr./KSB Order No./N° commande KSB: ----------
Zeichnungs-Nr./Drawing No./N° Plan:

Data sheet: Motor data

Motor type 806XNG IE3

Motor manufacturer	KSB SE & Co. KGaA	Rated voltage	460	V
Design acc. standard	IE3	Rated frequency	60	Hz
Service factor	1.15	Rated HP (D.O.L) or VFD	60	hp
Degree of protection	IP68	Rated current	73.4	A
Insulation class	H	Nominal speed	1,191	rpm
Starting mode	Direct starting	NEMA code letter	L	
No. starts / h	10	Starting to rated current	10	
Coolant temperature	< / = 104 °F (40 °C)	Starting current	734	A
Motor casing	Grey cast iron EN-GJL-250 (A 48 Class 35B)			
Explosion protection	Class I, Div. 1, Groups C,D, T3			
Pump type	KRT K 250-403/806XNG-S IE3			

Load	P1 kW	P2 hp	eta %	cos phi	I A
4/4	47.35	60.0	94.5	0.81	73.4
3/4	35.86	45.0	93.6	0.74	60.8
2/4	24.13	30.0	92.7	0.62	48.9
1/4	12.63	15.0	88.6	0.38	41.7

Main cable	2 x AWG 7-4	Diameter	0.72 inch...0.77 inch
Control cable	1 x AWG 15-10	Diameter	0.63 inch...0.67 inch
Cable. outer sheath	Waterproof synthetic rubber compound		
Cable length	33 ft (10 m)		

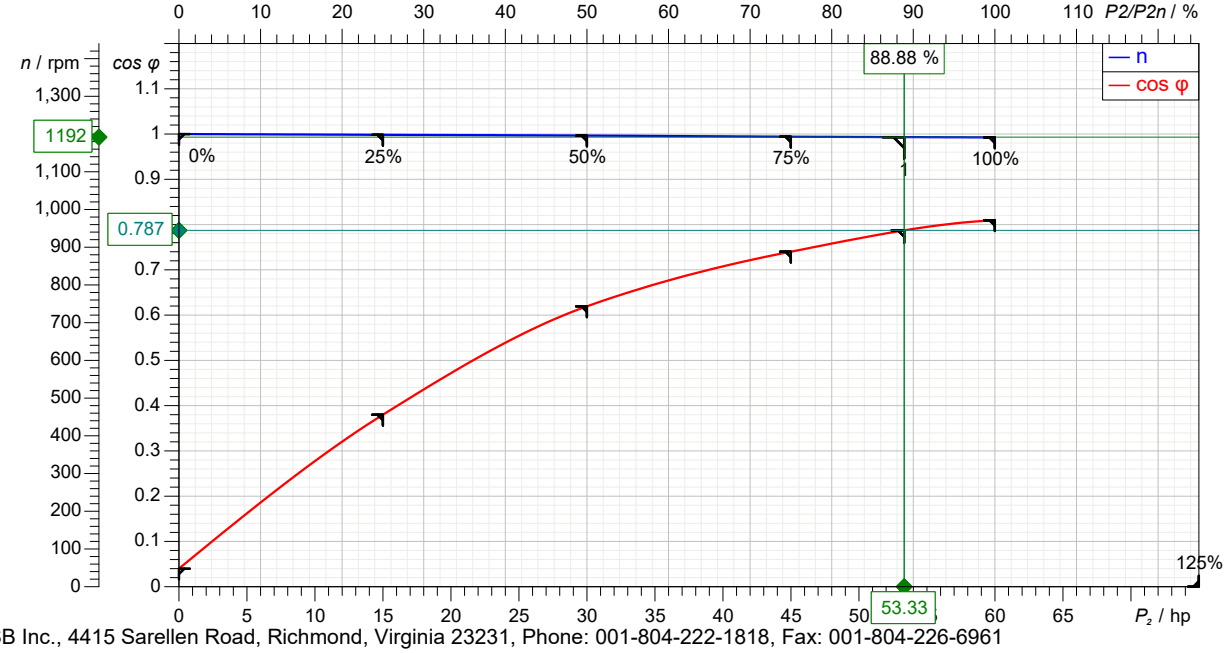

KSB Inc., 4415 Sarellen Road, Richmond, Virginia 23231, Phone: 001-804-222-1818, Fax: 001-804-226-6961
KSB Pumps Inc, 5885 Kennedy Road, Mississauga, Ontario L4Z 2G3 (Canada), Phone: (0905) 568-9200, Fax: (0905) 568-9120

KSB SE & Co. KGaA, Turmstrasse 92, 06110 Halle (Germany), Phone +49 (345) 48260, Fax +49 (345) 4826 4699, www.ksb.com

2021/06/02 (Build 213), 32 bit R16.07.01 - 05-08-2021 ALL USA

CREDIT REFERENCES

CORPORATE OFFICE:
DXP Enterprises, Inc.
5301 Hollister St, Houston TX 77040
(713) 996-4700 (713) 996-4701 Fax

BILLING ADDRESS:
DXP Enterprises, Inc. 1908
P.O. Box 2892
Clinton, IA 52733-2892
(713) 996-3460 AP Department

CONTACTS:
Bobbi Cadena
Treasurer

David Catano
Director of Accounts Payable

Pamela Barrett
A/P Manager

Email Invoices To: accountspayable@dxpe.com

Email Accounts Payable Inquiries and Statements To: apinquiry@dxpe.com

YEAR BUSINESS ESTABLISHED: 1908

TYPE OF ORGANIZATION: Publicly Traded Corporation (NASDAQ symbol: DXPE)

TYPE OF BUSINESS: Distributor of "MRO" product, equipment and services to industrial customers

DXP BANKING RELATIONSHIPS:
Bank of America 700 Louisiana St, 8th floor Houston, Texas 77002
Verification Department 888-715-1000

FEDERAL IDENTIFICATION NUMBER: 76-0509661

DUN & BRADSTREET NUMBER: 96-729-6120

VENDORS:

Viking Pump, Inc.
406 State Street
Cedar Falls, IA 50613
Attn: Credit Department
(319) 266-1741
(319) 273-8164 Fax

Timken Corporation
4500 Mount Pleasant NW
North Canton, OH 44720
Attn: Credit Department
(877) 484-6536
(888) 846-5369 Fax

Iscar Metals, Inc.
300 Westway PL
Arlington, TX 76018
Attn: Credit Department
(817) 258-3200
(817) 258-3221 Fax

Mobilease
3815 Dacoma Street
Houston, TX 77092
Attn: Credit Department
(713) 684-0506
(281) 676-5609 Fax

DXP Enterprises, Inc.
5301 Hollister St
Houston, TX 77040
Phone 713.996.4700
Fax 713.996.4701
www.dxpe.com

SUBSIDIARY/DBA NAMES

Alaska Pump & Supply, Inc. [i]
Aledco, Inc. [i]
APO Pumps & Compressor [i]
Application Specialties, Incorporated [i]
Best Equipment Service & Sales Company, LLC [i]
Best PumpWorks [ii]
C.R.S. Technologies, Inc. [i]
Carter & VerPlanck, LLC [i]
Corporate Equipment Co [i]
Cortech Engineering, LLC [i]
CW Rod Tool Company [ii]
D&F Distributors [ii]
Delta Process Equipment [ii]
Falcon Pump & Supply [ii]
Force Engineered Products, Inc. [i]
HSE Integrated, Inc. [i]
HSE Integrated, LLC [i]
Indian Fire and Safety [ii]
Integrated Flow Solutions, LLC [i]
Jerzy Supply [ii]
Kenneth Crosby [ii]
M.W. Smith Equipment [ii]
Machine Tech [ii]
Machinery Tooling & Supply, LLC [i]
MB Equipment, Inc [i]
Mid-Continent Safety [ii]
Pelican State Supply Company, Inc. [i]
PMI Operating Company, Ltd [i]
Power Machinery [ii]
Precision Industries, Inc. [i]
Production Pump Systems [ii]
Pump & Power Equipment [ii]
Pumping Solutions AZ, Inc (AZ) [i]
Pumping Solutions [i]
Pumping Systems [i]
PumpWorks 610, LLC [i]
Quadna, a DXP Company [i]
RA Mueller, Inc. [i]
Rocky Mountain Supply [ii]
Safety Alliance [ii]
Safety International [ii]
Tool Supply, Inc. [i]
Tool Tech Industrial Machine & Supply [ii]
Total Equipment Co [i]
Tucker Tool Company [ii]
Turbo Machinery Repair [ii]
York Pump & Equipment [ii]

[i] Subsidiary
[ii] DBA

DXP Enterprises, Inc.
5301 Hollister St
Houston, TX 77040
Phone 713.996.4700
Fax 713.996.4701
www.dxpe.com

CORPORATE OFFICERS

Senior Management

David R. Little
Chairman of the Board, President & Chief Executive Officer

David C. Vinson
Senior Vice President – Innovative Pumping Solutions

Todd Hamlin
Senior Vice President – Sales

John Jeffery
Senior Vice President – Supply Chain Service & Marketing

Kent Yee
Senior Vice President - Corporate Development, Chief Financial Officer

Gene Padgett
Chief Accounting Officer

Chris Gregory
Senior Vice President – Information Technology

Board of Directors

David R. Little
Chairman

Timothy P. Halter

Joseph R. Mannes

David Patton

DXP Enterprises, Inc.
5301 Hollister St
Houston, TX 77040
Phone 713.996.4700
Fax 713.996.4701
www.dxpe.com

FINANCIAL INFORMATION

To Whom It May Concern:

DXP is a publicly held company whose financial information is filed quarterly with the SEC and can be found for free by going to either DXP's website (www.dxpe.com) or the SEC web site: http://www.sec.gov/idea/searchidea/webusers/htm.

Bank of America uses a third party that charges a fee up to $25 for credit verification. Third Party Credit Inquiries: www.confirmation.com (Mail or faxed requests are not accepted) Information Line: 1-866-325-7201. Account No. 488038566002

- Audit Confirmations $23.00
- Credit Inquiry-Standard $15.00
- Credit Inquiry-Expedited $25.00

If you choose not to use the DXP or SEC websites, you are authorized to use Bank of America's third party for credit verification.

Sincerely,

Stephen Wick
Controller
DXP Enterprises, Inc.

DXP Enterprises, Inc.
5301 Hollister St
Houston, TX 77040
Phone 713.996.4700
Fax 713.996.4701
www.dxpe.com

DXP PURCHASE ORDER TERMS & CONDITIONS

PLEASE READ THESE TERMS AND CONDITIONS VERY CAREFULLY.

THE TERMS AND CONDITIONS ARE LIMITED TO THOSE CONTAINED HEREIN. ANY ADDITIONAL OR DIFFERENT TERMS IN ANY FORMS DELIVERED BY YOU ("VENDOR") ARE HEREBY DEEMED TO BE MATERIAL ALTERATIONS AND NOTICE OF OBJECTION TO THEM AND REJECTION OF THEM IS HEREBY GIVEN.

ACCEPTANCE OF THE PURCHASE ORDER OR OTHER DXP DOCUMENTATION, VENDOR AGREES TO BE BOUND BY AND ACCEPTS THESE TERMS AND CONDITIONS.

These terms and conditions constitute a binding contract between Vendor and the DXP Enterprises, Inc. entity identified on Vendor's invoice ("DXP") and are referred to herein as the "Agreement." Vendor accepts this Agreement by accepting a Purchase Order from DXP.

I. CONDITIONS
   a. No terms and conditions contained in any order placed with DXP other than those stated herein shall be binding on DXP Enterprises, Inc. unless hereafter agreed in writing.
   b. Purchase Orders must be accepted and confirmed through an order acknowledgement within 24 hours of receipt.
   c. DXP's Purchase Order number must be referenced on carrier's bill of lading.
   d. Orders are not binding upon DXP until an order acknowledgment is received and accepted by DXP.
   e. All order acknowledgements are subject to acceptance by an officer of DXP.

II. PRICES
   a. Prices quoted to DXP are not subject to change without notice. Vendor is responsible for typographical, stenographical, or clerical errors.

III. PAYMENT TERMS
   a. DXP promises to pay any and all amounts billed for products and services rendered. Vendor accepts the proposed payment of net 60 unless otherwise agreed upon through a mutually signed agreement. Vendor also understands that DXP may not be assessed financial charges, attorney's fees, collection costs, or any other fees, no exceptions. The financial obligation of DXP will be limited to the agreed amount stated in the Purchase Order.

IV. INABILITY TO PERFORM
   a. Vendor may be liable for loss or damage of any kind resulting from delay in delivering or inability to deliver ordered products or other nonperformance hereunder, unless such loss or damage is a result of fire, acts of civil authorities, and acts of military authorities, strikes, riots or acts of God. In lieu of actual damages for such delay, the Vendor agrees that liquidated damages as set forth in a Purchase Order may be assessed and recovered by DXP as against Vendor, in the event of delayed goods and/or material and without DXP being required to present any evidence of the amount or character of actual damages sustained by reason thereof. DXP also reserves the right to cancel partial or complete orders at its sole discretion without any liability or financial obligation to DXP.

V. CONTROLLING LAW
   a. This Agreement shall be construed and interpreted according to the laws of the State of Texas. It is further expressly understood and agreed that this Agreement shall be deemed to have been executed in Houston, Texas.

VI. DISPUTES

a. Any disputes relating to this Agreement and/or any Purchase Order will be resolved in state district court in Harris County, Texas; provided, however, that in DXP's discretion such an action may be heard in some other place designated by DXP if necessary to acquire jurisdiction over third persons so that the dispute may be resolved in one action. Vendor hereby agrees to appear in any such action and hereby consents to the jurisdiction of such courts. All attorney's fees and court costs of all the parties involved will be financial responsibility of their own.

VII. WARRANTY

a. Vendor warrants that products sold by it hereunder will be free from defects in workmanship and material, merchantable, free of all liens and security interests, and fit for their ordinary intended purpose. Vendor's obligation will be to repair or replace any such products which prove to be defective in normal use. Materials and/or goods shall be received subject to DXP's right to inspect, test and approve all such goods and/or materials prior to acceptance or payment. These materials and/or goods will be covered under warranty for a period of eighteen months from the date of delivery.

VIII. SHIPMENT

a. Any shipment dates quoted by Vendor is not subject to change, unless otherwise agreed upon by DXP, and must be submitted in writing and accepted by DXP prior to order placement.
b. Shipping terms will be FOB Destination.
c. The selection of any carrier other than one specified on this Purchase Order must be approved prior to shipment. All deviations will be debited in full.
d. Unless specified in the Ship Via box, please ship via DXP's Freight carriers:
    i. UPS Ground Collection – 150 pounds or less. Do not add additional Declared Value insurance without approval.
    ii. UPS FREIGHT Collect – over 150 pounds.

IX. RETURNS

a. DXP may return items to the Vendor. Any restocking charges may apply but must be mutually agreed to in writing.

X. EXCLUSIVE TERMS AND CONDITIONS

a. The provisions of this Agreement will not be changed or modified, except by an instrument in writing signed by DXP. This instrument, together with the acknowledgment and any attachment by DXP hereto, contains the entire and the only agreement between the parties with respect to the sale of the products covered hereby and supersedes any alleged related representation, promise or conditions not specifically incorporated herein, and notwithstanding any different of additional terms or conditions contained in Vendor's invoice or other proper communication. DXP's order was processed and invoiced only on the conditions by Vendor accepting the terms and conditions contained herein. In the absence of Vendor's acceptance of the terms and conditions contained herein, Vendor's commencement of order will not be construed as acceptance of Vendor's terms and conditions, or any of them. Any confirmation of a Purchase Order or this Agreement by Vendor which states different or additional terms will be operative as an acceptance of this Agreement, but such different or additional terms are hereby rejected unless specifically agreed upon in writing by DXP. If a contract is not earlier formed by mutual agreement in writing, Vendor's acceptance of the order will be deemed acceptance of all of the terms and conditions stated herein.

UNIFORM SALES & USE TAX EXEMPTION/RESALE CERTIFICATE — MULTIJURISDICTION

The below-listed states have indicated that this certificate is acceptable as a resale/exemption certificate for sales and use tax, subject to the notes on pages 2—4. The issuer and the recipient have the responsibility to determine the proper use of this certificate under applicable laws in each state, as these may change from time to time.

Issued to Seller: _____

Address: _____

I certify that:
Name of Firm (Buyer): *DXP Enterprises, Inc.*
Address: *5301 Hollister St. Houston TX 77040*
Corporate Office

is engaged as a registered
- ☐ Wholesaler
- ☒ Retailer
- ☐ Manufacturer
- ☐ Seller (California)
- ☐ Lessor (see notes on pages 2—4)
- ☐ Other (Specify) _____

and is registered with the below-listed states and cities within which your firm would deliver purchases to us and that any such purchases are for wholesale, resale, or ingredients or components of a new product or service to be resold, leased, or rented in the normal course of business. We are in the business of wholesaling, retailing, manufacturing, leasing (renting) selling (California) the following:

Description of Business: Sales of industrial equipment, parts, supplies, repairs, rentals, services and related items

General description of tangible property or taxable services to be purchased from the Seller: industrial equipment, parts, supplies, repairs, rentals, packaging, services and related items.

State	State Registration, Seller's Permit, or ID Number of Purchaser	State	State Registration, Seller's Permit, or ID Number of Purchaser
AL[1]	R000824483	MO[16]	*20484259*
AR	*63810703*	NE[16]	*NE 001 010197273*
AZ[2]	*20856022*	NV	*1009363239*
CA[3]	101221578	NJ	*760-509-661/000*
CO[4]	015-21591-0001	NM[4,17]	*Obtain NTTC online*
CT[5]	48943567001	NC[18]	*600591991*
FL[6]	*78-80138827222*	ND	*22914000*
GA[7]	*308117520 & 308117521*	OH[19]	*89134255*
HI[4,8]	*No Nexus*	OK[20]	*10075091-05*
ID	*003807366*	PA[21]	*85391546*
IL[4,9]	*IBT 4085 3357*	RI[22]	*212894343*
IA	*157054079*	SC	*02308209-4*
KS	*004760509661F01*	SD[23]	*1021-0075-ST*
KY[10]	*312129*	TN	*1000360083-SLC*
ME[11]	*1164158*	TX[24]	*1-760509661-3*
MD[12]	*10417094*	UT	*12635538-002 STC*
MI[13]	*760509661*	VT	*No Nexus*
MN[14]	*9366395*	WA[25]	*602971565*
		WI[26]	*4561026992703-05*

I further certify that if any property or service so purchased tax free is used or consumed as to make it subject to a Sales or Use Tax we will pay the tax due directly to the proper taxing authority when state law so provides or inform the Seller for added tax billing. This certificate shall be a part of each order that we may hereafter give to you, unless otherwise specified, and shall be valid until canceled by us in writing or revoked by thee city or state.

Under penalties of perjury, I swear or affirm that the information on this form is true and correct as to every material matter.

Authorized Signature: _____
(Owner, Partner, or Corporate Officer, or other authorized signer)

Title: Sr Vice President
Date: _____

REVISED 3/13/2019

Seven Year Submersible Pump Warranty and Ten Year Guide Cable Warranty for Permanent Municipal Installations

□S□□□c□□□S□□□ w□rr□□ts to the Or□□□□□□□d Purch□ser □O□P□□th□t □S□s su□□ers□□e pu□ps o□the t□pe □□□ed □□o□e the □Pu□p s□□□whe□ used □or sew□□e co□ect□□ s□ste□s or □or □tter□ tte□t dut□ c□□e pu□p□□ w□□□e □ree □ro□ de□ects □□ wor□□ □□shp □□d □ □ter□□s □or □ per□od o□se□□ □□□□e□rs o□ □ pro□□ted □□ss □ro□ d□te o□□□t□□□shp□e□t □Pro□□ted Ter□ □□□□□ □dd□□o□ to the Pu□p w□rr□□t□□□S□ w□rr□□ts to O□P th□t the □ude C□□□e so□d with the Pu□p w□□□e □ree □ro□ de□ects □□ wor□□ □□shp □□d □ □ter□□s □or □ per□od o□te□ □□□□□e□rs □ro□ d□te o□□□t□□□shp□e□t□Pu□ps □□d □ude C□□□es co□ered □□ th□s w□rr□□t□ □re □□□up□e□t□ W□rr□□t□es hereu□der □re e□press□□ co□d□□o□ed upo□ Pu□ps □□□pu□p□□□ □□r□s□e□ree□ □o□□corros□□e □□uids used □□ per□ □□e□t □u□□p□□□□st□□□t□□s□□□□□e□□□ oper□ted □ccord□□□ to □S□ spec□□c□t□□s□□□d □□□□□o□tor□□□e□up□e□t □□corpor□ted □□ the Pu□p□s correct□□ co□□ected □□d □□use□

O□P□s c□□□□ □s□o□□□e□ed de□ects □□ wor□□ □□shp or □ □ter□□s dur□□□ the Ter□ o□the w□rr□□t□□ust □e de□□ered □□ writ□□□ to □S□ with□□ □□et□ □□□□d□□s o□d□sco□er□□□S□s o□□□□t□□□u□der th□s w□rr□□t□e□press□□ □s □□□ted to□t □S□□so□e d□scret□□□rep□r or rep□ce□e□t o□de□ect□e p□rts□□pro□ded th□t □□□the ter□s o□p□□□e□t □r □□up□e□t h□□e □ee□ co□p□ed w□th □□d □□□the Pu□p□s□with c□□e□s□ □tt□ched or □□ut□p□rts□thereo□h□□e □ee□ retur□ed re□ht prep□d to □S□ or to □□ □uthor□ed □S□ Ser□ce □□c□t□□s d□rected □□□S□ □□d □□□□S□ h□s □c□□ow□d□ed □□ writ□□□ th□t the de□ect h□s □ee□ c□used □□ □□ut□ wor□□ □□shp or de□ect□e □ □ter□□□ □or □□we□r □□d te□r □re spec□□c□□□ e□cluded □ro□ w□rr□□t□co□er□□e□□S□ □r□der Pu□ps □re spec□□c□□□ e□cluded □ro□ th□s w□rr□□t□□The w□rr□□t□ sh□□□e □o□d □the Pu□p□s□or □ts p□rts□h□□e □ot □ee□ used □□d □ □□□t□□ed □□ □ccord□□ce with the pr□□ted □□struct□□s o□ □S□□or h□□e □ee□ d□□ □□ed who□□ or □□ p□rt □□ □suse□□cc□de□t□□e□ect□□□ut□ e□ectr□□□s□ste□ □or □□□ other c□use □e□o□d the co□tro□o□□S□□

U□ess otherw□se spec□□ed □□ □S□□the pro□□ted w□rr□□t□per□od sh□□□e co□puted □ro□ the or□□□□□□shpp□□ d□te to the d□te the Pu□p□s□□□d□or p□rt□s□□re retur□ed to □S□ or □ts □uthor□ed rep□r □c□t□□or□□□uthor□ed rep□rs □re □□de o□ ste□the w□rr□□t□ per□od sh□□□e co□puted to the d□te □ot□ce o□de□ects □s rece□ved □□□S□□

Pu□p□s□or p□rt□s□rep□□ed or rep□□ced w□□□e retur□ed □t the cost o□O□P□Rep□rs or rep□ce□e□t p□rts □re w□rr□□ted □ree □ro□ de□ects □□ wor□□ □□shp □□d □ □ter□□s □or the o□□er o□the u□□e□pr□ed ter□ o□th□s w□rr□□t□ or □□et□ □□□□d□□s □ro□ the d□te □S□ shp□s such rep□□ed or rep□□ced □e□s□□□d □□□other ter□s □□d co□d□□o□s o□th□s w□rr□□t□ sh□□□pp□□□O□P □□rees to pro□de docu□e□t□□o□ □□d d□t□ □□support o□ts w□rr□□t□c□□□ □s□□s re□uested □□□S□□Pr□or to shp□e□t □□□S□□O□P sh□□re□ t□ts port□o □□the rep□r or rep□□ce□e□t cost □s det□□ed □e□ow□

□s re□uested □□□S□□O□P sh□□pro□de e□ectr□□□s□ste□ sche□ □t□s □□□cud□□ □□□s o□□ □ter□□□□to support □□□□w□rr□□t□c□□□ s□Th□s docu□e□t□□o□ w□□□e re□u□red □or w□rr□□t□c□□□ s □or pu□ps o□□□□ horsepower □□d □r□er□

□□ □ccord□□ce w□th the t□□□e □e□ow□□S□ w□□□e□r the pro□□ted cost □or w□rr□□t□ed rep□rs or rep□□ce□e□ts □s □o□ows□

TABLE OF KSB'S PRO-RATED COSTS FOR WARRANTIED REPAIR OR REPLACEMENT OF PUMPS AND PARTS					
□te□	C□te□or□es	□	□□	□□□	□□
□□Pu□ps	Mo□ths □ter Shp□e□t	□□□□	□□□□□	□□□□□	□□ □□□
	□S□ Sh□re o□Cost	□□□□	□□□	□□□	□□□
□□ □ude C□□es	Mo□ths □ter Shp□e□t	□□□□□		□	□
	□S□ Sh□re o□Cost	□□□□		□	□

KSB WILL NOT BE RESPONSIBLE FOR TRAVEL EXPENSES, RENTED EQUIPMENT, OUTSIDE CONTRACTORS' FEES, UNAUTHORIZED REPAIR(S), REPAIRS NEEDED DUE TO MISUSE, ACCIDENT, NEGLECT, FAULTY ELECTRICAL SYSTEM, OR OTHER CAUSE OUTSIDE OF KSB'S CONTROL SHOP EXPENSES OR FOR PUMPS PURCHASED OR USED WITHOUT KSB SUPPLIED POWER CABLE(S).

THE WARRANTIES MADE HEREIN BY KSB ARE IN LIEU OF ANY AND ALL OTHER WARRANTIES, EXPRESSED OR IMPLIED. KSB. DISCLAIMS ANY AND ALL WARRANTIES OF MERCHANTABILITY OR FITNESS FOR A PARTICULAR PURPOSE. KSB ASSUMES NO LIABILITY FOR LOSS OF USE, LOSS OF PROFIT, OR ANY DIRECT, INDIRECT, INCIDENTAL, OR CONSEQUENTIAL DAMAGES OF ANY KIND.

NOTWITHSTANDING ANYTHING HEREIN TO THE CONTRARY, IN NO EVENT SHALL KSB'S LIABILITY TO PURCHASER EXCEED THE FEES PAID OR TO BE PAID FOR PARTS OR REPAIRS UNDER A WARRANTY OR PURPORTED WARRANTY CLAIM THAT GIVES RISE TO ANY SUCH ALLEGED LIABILITY.

□o s□es □□e□t or s□es represe□t□t□e or □□□other perso□ □s □uthor□ed to □od□□□e□te□d□or e□□r□e th□s W□rr□□t□□□□□ □od□c□t□o□□e□te□s□o□□or e□□r□e□ e□t o□th□s W□rr□□t□sh□□□ot □□□d □S□□

KRT Submersible Pump

Installations



KSB has installed thousands of KRT Submersible pumps. The following is a partial list for some of the installations.

Shipped To	State	Model	Delivered	Qty.
A.R. BUTLER CONSTRUCTION	Alabama	KRT F080-200/ 3 4XG (185) 460	2008	2
ABSOLUTE EXCAR INC	Alabama	KRTF100-250/54UG	1999	2
ALABASTER WWTP	Alabama	KRT F100-401/ 65 4XG (370) 460	2013	2
AMERICAN PIPE & SUPPLY	Alabama	KRT S040-250/ 12 2XG (190) 460	2012	2
ANNISTON WWTP	Alabama	KRT E080-253/ 15 6XEG (240)460	2020	2
ASHVILLE WATER DEPARTMENT	Alabama	KRT F080-250/ 11 4XG (249) 230	2017	1
BAGGETTE CONSTRUCTION CO.	Alabama	KRT E080-251/ 11 4XG (225) 460	2003	2
BIRDSONG PEANUT	Alabama	KRT E080-200/ 3 4XG (190) 230V	2008	1
BIRDSONG PEANUT	Alabama	KRT F080-250/ 11 4XG (260) 230	2020	2
BRASHER UTILITY CONST	Alabama	KRT F080-250/ 16 4XG (250) 460	2019	2
BREMNER FOOD GROUP	Alabama	KRT E080-200/ 2 4XG (168) 460	2011	2
HACKLEBURG WWTP	Alabama	KRT K100-251/ 5 4XG (205) 460	2020	1
LAMBERT CONSTRUCTION	Alabama	KRT E080-200/ 2 4XG (144) 460	2012	2
LATA PBLG & CONSTRUCTION	Alabama	KRT F100-200/ 3 4XG (185) 200	2014	2
OAK MOUNTAIN STATE PARK	Alabama	KRT F100-250/ 7 4XG (215) 230	2020	2
ALYESKA PIPELINE	Alaska	KRT K151-401/ 78 4XG1 (340)460	2001	1
FAIRBANKS NORTH STAR	Alaska	KRT F080-250/ 4 6XC1(249) 460	2008	1
ABRAMS AIRBORNE MFG INC	Arizona	KRTS040-160/22UG	1998	1
APS - PALO VERDE	Arizona	KRT F065-200/ 1 4X1G(140) 460	2019	1

Our technology. Your success.
Pumps ▪ Valves ▪ Service

KRT Submersible Pumps 40 - 700





Highly efficient and versatile

Fields of Application:

- Raw sewage containing solid and long fibrous mixtures
- Contaminated liquids with high gas and air content
- Liquids containing sludge and solid substances
- Floating sludge and debris such as vegetable wastes, wood chips and similar waste (KRT as a vacuum suction pump on a pontoon)
- Dirty water and stormwater
- Raw, digested and activated sludge
- Flume and wash water
- Pulp
- Slaughter house wastes
- Water/product suspensions
- Sand/cement/water mixtures
- Plastic granules in liquid
- Textile effluent
- Industrial effluent and wash water as well as media in production plants, e.g. flume water, scale wastes, cutting oil and other media containing abrasive components.
- Chemical and waste disposal effluent with pH-values 2 to 12
- Effluent containing acid
- Seawater, brackish water; and other media with chlorine.

Advantages and technical features:

- Economical installation
- Wet installation submersible motor pumps operate submerged in the pump sump
- Low building costs, eliminating intermediate shaft, drainage pump and superstructure
- Pump stations below ground do not clutter the landscape, traffic areas remain unchanged when sumps are located under roads
- The compact pump/motor sets require less space and are easy to install
- With the double pump guide rails the pump can be installed at almost any installation depth and withdrawn easily
- No need to enter the pump sump to carry out inspection and maintenance work
- Smaller inspection opening on duplex pump stations
- Small pump sump due to high permissible switching frequency
- Stationary and portable applications possible, see Types of Installations
- Permanent dry well installation possible where the pump is exposed to the danger of occasional flooding
- Minimum assembly and maintenance work
- No coupling to be aligned since KRT pump and motor have a common shaft
- No sealing or flushing water required or leakage outlet
- Motor cooled by the medium
- High operation safety (dry running possible)
- Quiet operation

Type of construction:

KRT motor pumps are submersible, single stage close-coupled pump sets. Depending on the liquid to be pumped and the size of the pump different impeller shapes are used:

K and K-max - Closed non-clogging 2 or 3 vane impeller
E and E-max - Single vane impeller
F and F-max - Vortex impeller
S - Grinding impeller
D - Open single vane impeller



The safe and reliable solution

Air cooled motor design:

1 Reliable Motor - specifically designed for submersible pumps with air filled housings, explosion proof ratings, continuous duty cycles and automatic monitoring of winding temperature and moisture. All motors FM approved for Class I, Division 1 Group C & D hazardous locations.

2 Water Tight Cable Entry - power cables with grommet and washer. Cable entry further epoxy sealed to ensure no liquid gets inside the motor even if the cables are severed below water level.

3 Non-proprietary silicon carbide faced mechanical seals mounted in tandem in an oil bath.

4 Pump and motor shafts of stainless steel or Gr 1045 carbon steel protected and isolated by stainless steel shaft sleeves (for carbon steel shafts).

5 Flexible Hydraulic System - enclosed 1, 2, and 3 vane, recessed, grinder or open single vane impellers available to allow a hydraulic selection ideally suited for any particular application.

6 Major castings of ASTM A 48 Class 35 B cast iron, duplex stainless steel and wear-resistant chromium white iron to 64 HRC available.

7 Automatic discharge connections with a positive seal between pump and elbow ensures zero leakage.

8 Optional hard metal wear rings maintain hydraulic efficiency.

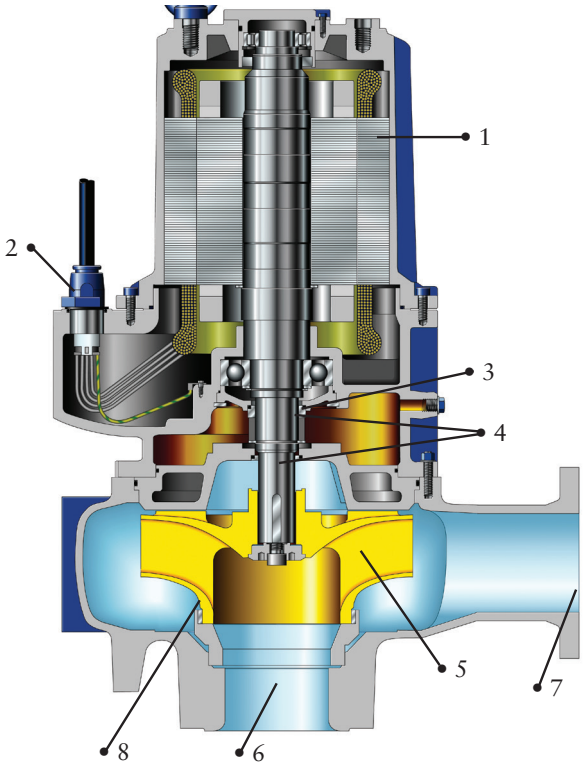

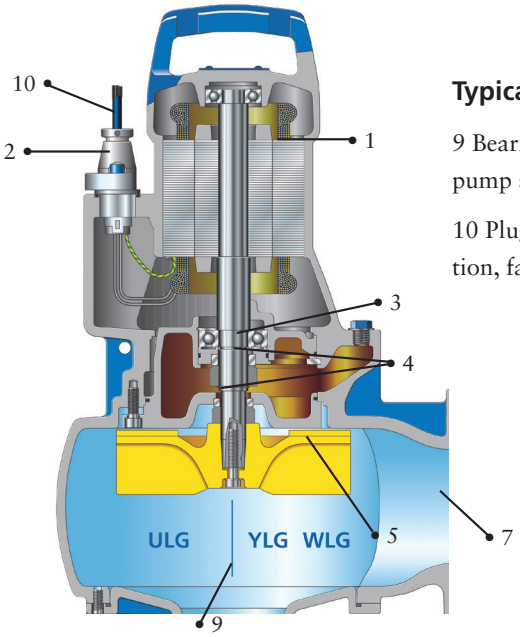

Typical cross section of motors 5 HP and below:

9 Bearing, seal and gasket kits that are interchangeable between pump sizes, reducing spare parts costs.

10 Plug in epoxy sealed cable entry for simple, polarized connection, fast pump installation on smaller HP motors.

The right impeller design for cost effective and reliable operation

Because no one type of impeller is equally suitable for all applications, KSB offers the KRT series with various types of impellers according to specific requirements. Our range of vortex, single and multi-vane, non-clogging open and closed impellers allows the best selection for every application in consideration of operating parameters, including flow rate, head, efficiency, solid size, wear behavior, media, and gas content.

Impeller Type and Description

K Closed non-clogging 2 or 3 vane impeller for contaminated solids-laden liquids
- raw sewage
- effluent
- activated sludge

E Single vane impeller for media with solid and long fibrous materials
- raw sewage
- raw sludge
- recirculation and heating sludge

F Vortex impeller for liquids with coarse solids and media containing air and gas
- raw sewage
- raw and digested sludge

D Open single vane impeller for handling fibrous solids and heavy sludge (up to 13% solids by weight)
- raw sewage
- raw and digested sludge
- activated sludge
- recirculation and heating sludge

S Grinder impeller for high pressure domestic sewage systems containing long fibrous admixtures
- effluents
- domestic sewage

Flexible Installation Options

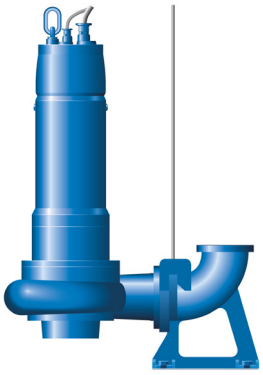

Stationary guide cable installation

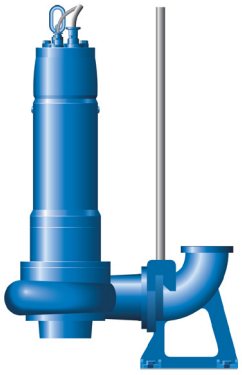

Stationary guide rail installation



Portable installation



Dry installation vertical or horizontal

Stationary guide cable or guide rail installation - for wet well installation ensuring automatic pressure-tight coupling of the pump to the discharge elbow.

Portable installation - with stand and discharge connection for pipe or hose (e.g. with rigid coupling).

Dry installation - for installation in a dry well.

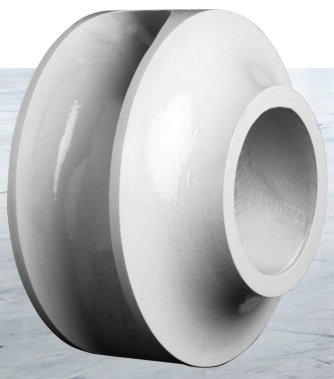

K

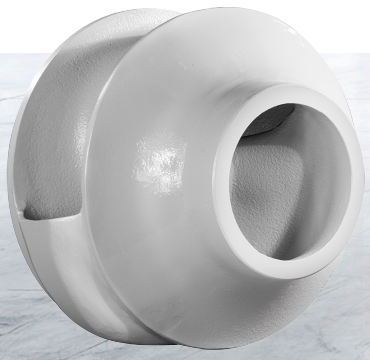

K-max

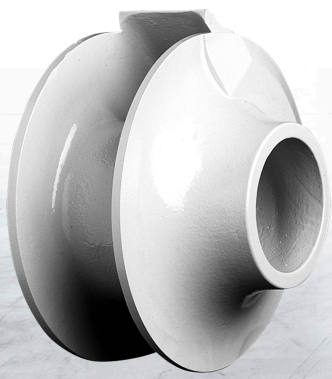

E



E-max

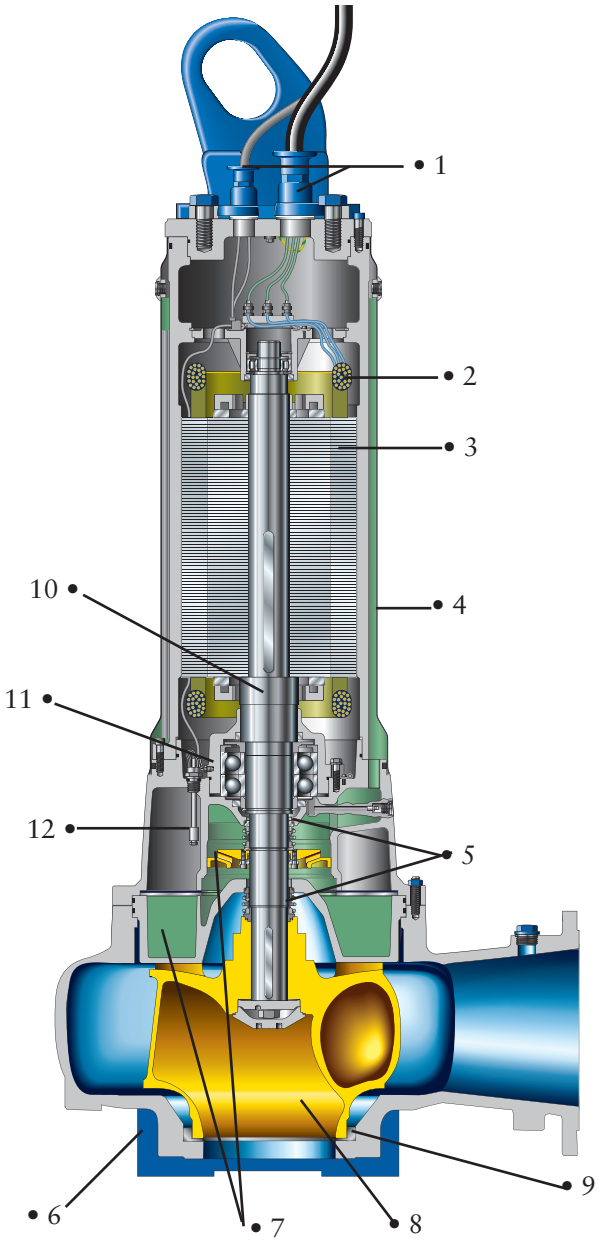

The pump that keeps cool

* Closed Loop Cooling Jacketed Motors Larger than 13HP

1 Cable Entry - absolutely water tight. Even in the event of damage to the cable sheath and core insulation there is no possibility of moisture entering the motor chamber along the strands due to capillary action.

2 Thermal Motor Protection - extensive sensor technology for permanent monitoring to ensure trouble-free operation.

3 High Efficiency Motor - all motors FM approved for Class I, Division 1 Group C & D hazardous locations.

4 Optional Closed-loop Cooling System - optimal cooling in all operating conditions with no external cooling required, perfect for dry-well installations.

5 Silicon carbide faced mechanical seals mounted in tandem in coolant liquid bath.

6 Major Casting of ASTM A 48 Class 35 B Cast iron, Duplex Stainless steel and wear resistant Chromium White Iron.

7 Heat exchanger and separate coolant circulating impeller for optional cooling jacket.

8 Enclosed 1, 2, and 3 vane or recessed impellers available to allow a hydraulic selection ideally-suited for any application.

9 Optional wear rings in hard metal to ensure continued high efficiencies and long impeller life.

10 Pump and motor shafts of stainless steel or Gr 1045 carbon steel protected and isolated by stainless steel shaft sleeves.

11 Temperature monitoring for lower bearing, optional lower bearing available on larger motors.

12 Float sensor in seperate leakage collection chamber available on larger motors. Prevents leakage from reaching motor or lower bearing.

(Please consult KSB for the availability of sizes for motors larger than 80hp.)



F

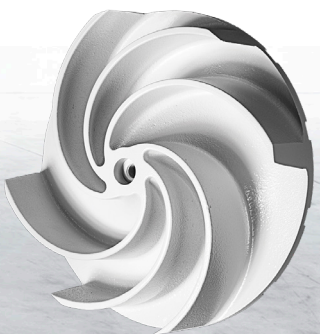

F-max

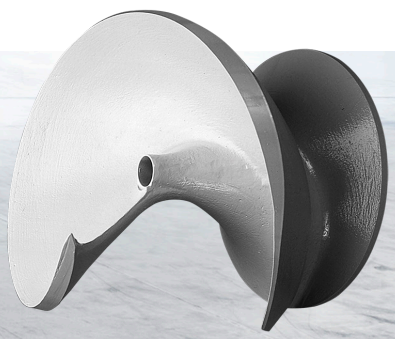

D

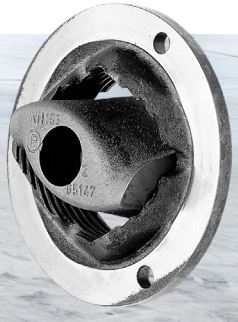

S

Wet well installations

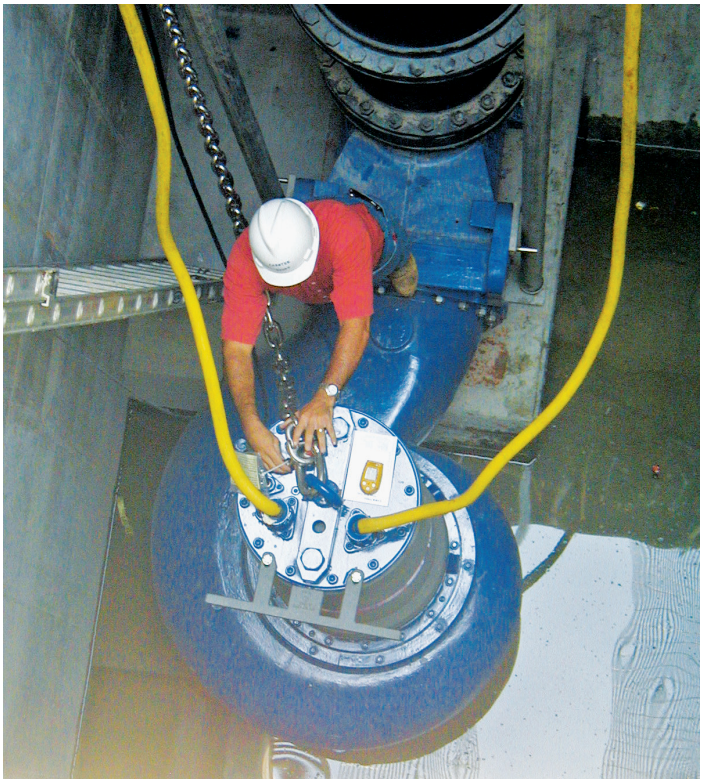

Two large 24" discharge, 148hp submersible pumps with stainless steel cooling jacket on KSB guide rail system for an effluent wastewater treatment pumping station.

Dry well installations



Three 12" discharge, 161hp closed-loop cooling dry-pit pumps with stainless steel cooling jacket in existing pumping station.



Two large 24" discharge, 251hp submersible pumps and one 12" discharge, 80hp on KSB guide cable system for a storm-water station.



Three 10" discharge, 194hp closed-loop cooling dry-pit pumps with stainless steel cooling jacket in existing pumping station.

Technical data

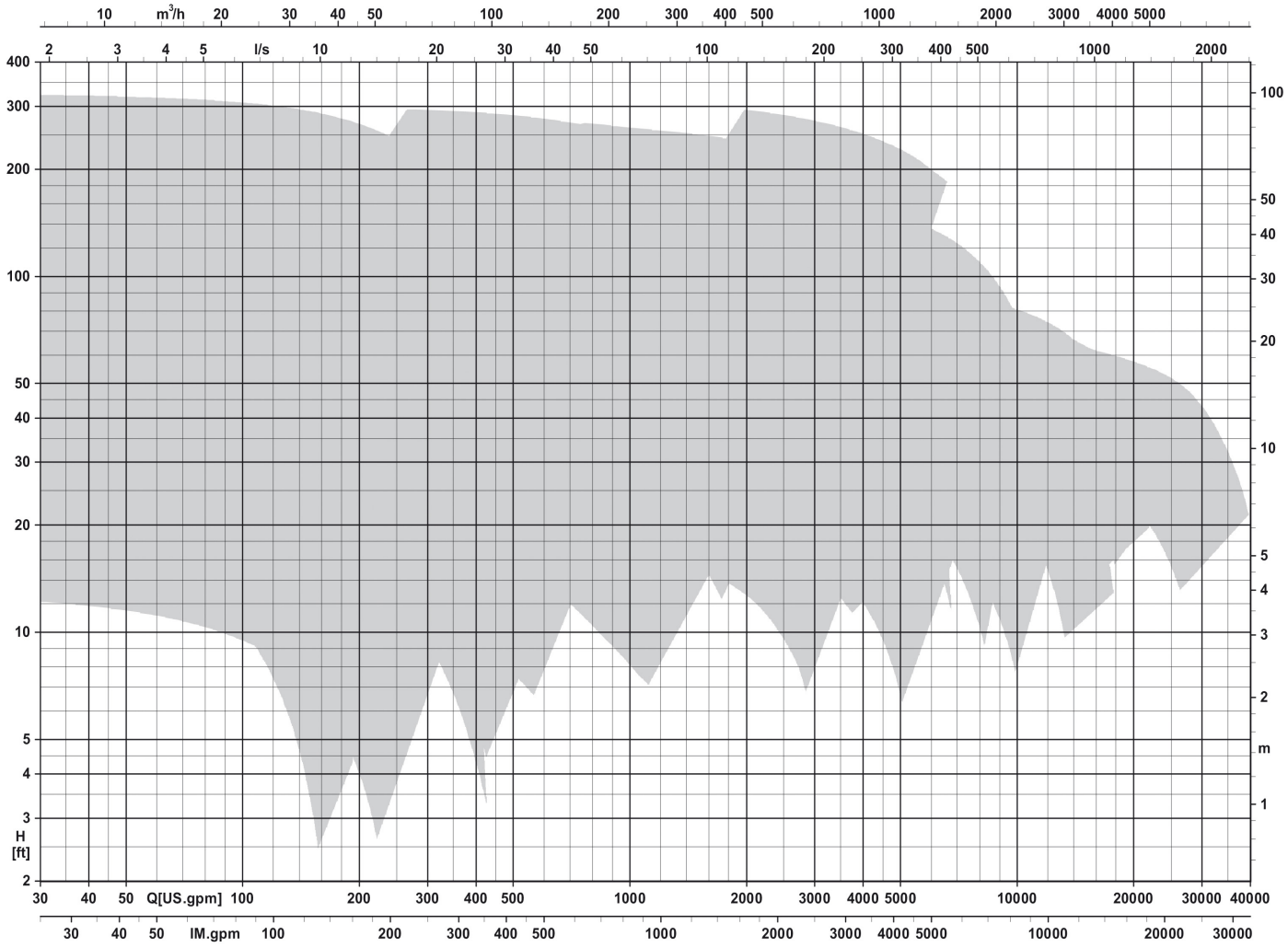

Operating Data	
Pump Size - ANSI/ASME	2” - 30”
Capacity - Q (gpm)	up to 45,000
Head - H (ft)	up to 330
Liquid Temperature - t (°F)	up to 140
Motor Rating - P (hp)	up to 1,140

Material Options	Cast Iron A 48 Class 35 B				Wear Resistant Chromium White Iron A532 Class II B (15% CrMo)	Duplex Stainless Steel A 743 CD 4 MCU	
Part Designation	**G**	**G1**	**G2**	**GH**	**H**	**C1**	C2
Pump Casing	A 48 Class 35 B				A532 Class II B (15% CrMo)	A 890 CD 4 MCU	
Intermediate Casing	A 48 Class 35 B				A532 Class II B (15% CrMo)	A 890 CD 4 MCU	
Shaft	A 276 Type 420; A 576 Gr. 1045 w/shaft protection sleeve					A 182F51/A276 Type 420/ A576 Gr. 1045	
Impeller	A 48 class 35 B	A 890 CD 4 MCU	A532 Class II B (15% CrMo)			A 890 CD 4 MCU	
Motor Casing	A 48 Class 35 B					A 890 CD 4 MCU	
Discharge Elbow	A 48 Class 35 B				A532 Class II B (15% CrMo)	A 890 CD 4 MCU	
Power/Control Cable	Chlorinated Polyethylene (CPE)						



Technology that **makes its mark**

KSB, Inc.
4415 Sarellen Road
Henrico, VA 23231
ksb.us.com

60033/PF/09.21/V1/US ©2021 KSB, Inc. All rights reserved. Content subject to change without prior notice.

ALL KRT SERIES SUBMERSIBLE PUMPS	**TECHNICAL SPECIFICATIONS** **ALTERNATE IMPELLERS**	May 05

INSTRUCTIONS:

The alternate impeller types are as described in the KSB "KRT Catalogue". To specify pumps with impellers other than single vane or multivane enclosed, delete the paragraph titled "IMPELLER AND WEAR RINGS" found on page 3 of the standard specifications sheet, and replace it with the following paragraph.

	Vortex impeller

IMPELLER:

The □ pe□er s□sh□□□e o□□r□□ c□st ro□□C□ss □□□□d□□□□ c□□□ □□□□ced□se□ □ope□□□o□□ co□□□□□ des□□ c□p□□□e o□h□□d□□□ so□s□□□rous □ □ter□is□he□□□ s□d□e □□d other □ □tter □ou□d □□ w□stew□ter□ The □□ pe□er s□sh□□h□□e □ □□c□shroud o□□□ wi□h □□c□pu□p□out □□□es to e□u□□□e □□□□□thrust□□□d cur□ed □□des wh□ch protrude □□to the pu□p c□s□□□ □or □ □□□□ u□ e□□c□e□c□□The □□ pe□er w□□cre□te □ □orte□ wh□ch c□rr□s so□ds throu□h the pu□p c□s□□□ wi□hout p□ss□□□ throu□h the □□des□□□ pe□er s□sh□□□e c□p□□□e o□p□ss□□□ □ □ □□□□ u□ □□□□d□□□eter so□d□

	Open single vane impeller

IMPELLER AND WEAR PLATE

The □o□□c□o□ □□ pe□er des□□ sh□□□co□ □□□e the □ct□□ o□□ ce□tr□u□□□□ope□□s□□□e □□□e □□d the c□p□□□□te□ o□□ pos□□□e d□sp□□ce□ e□t screw pu□p□The □□ pe□er sh□□ pro□□de □r□du□□ □cce□er□t□o□ □o□□□ wi□h □ □e□t□ ch□□□e □□ □ow d□rect□□ resu□□□□ □□ □ow she□r stress o□the pu□ped □ed□□□The □□ pe□er sh□□□e su□ted □or h□h e□□c□e□c□pu□p□□□ o□□oth □u□□c□p□□□□d □□dustr□□□w□stew□ter□□t sh□□□e c□p□□□e o□h□□d□□□ co□rse te□t□e t□pe so□ds wi□h □ □ □□□□ u□ □ □ so□ds p□ss□□e□□s we□□□s s□d□e up to □ □□□ dr□we□ht so□ds co□te□t□ The □□ pe□er e□d□□□ ed□es sh□□p□ss □cross □he□c□□□roo□e□oc□ted o□the we□r r□□□□ to pro□de □se□□c□e□□□□ □ct□□ to □ee the sur□□ce o□so□ds □□d □□ers wi□h e□ch rot□t□□ o□the □□ pe□er□ The □□ pe□er sh□□□ □e □o□e p□ece c□st□□□ o□the □ □ter□□□spec□□ed□ □t sh□□□e s□ooth□we□□□□shed□□ree ro□ □□owho□es □□d □□ per□ect□□s□□□d □e □□□□ced □or the dut□ po□□t□ The □□ pe□er e□d□□□ ed□es sh□□□e h□rde□ed to □ □ □□□□ u□ □□□ □r□e□h□rd□ess □Rc □□□□ The □□ pe□er sh□□□e secure□ □□ted to the pu□p sh□□t □□ such □ □ □□□er th□ t□does □ot □oose□or □eco□e det□ched □□the pu□p s oper□ted □□the wro□□ d□rect□□ □s □ □h□ppe□ □□re□ersed □ow or re□ersed □otor co□□ect□□s□ □ h□rd □et□□suct□□ we□r r□□□ sh□□□e pro□ded th□t □s e□ter□□□□ □djust□□e to co□pe□s□te □or we□r□o□the □ □ter□□□spec□□ed□

Amarex KRT –
Submersible Motor Pump



Applications:

- Wastewater transport
- Municipal and industrial wastewater
- Wastewater treatment
- Sludge treatment
- Stormwater transport

More information:
www.ksb.us.com

Impeller options



Type F-max | Type E-max | Type D | Type K-max

Amarex KRT – Submersible Motor Pump

1 Reliable operation

- Non-clogging impellers with large free passages, optimized for every type of wastewater
- Specially protected cable entry
- Monitoring: Sensors trigger a warning in the event of overheating or ingress of moisture

2 Energy savings

- Optimized hydraulic system yields high efficiency
- Energy-saving motors meeting IE3 requirements*

3 Dependability

Two bi-directional mechanical seals

4 Cost efficiency

- The right material for every fluid. Available in grey cast iron or, optionally, in corrosion-resistant duplex stainless steel or wear-resistant white cast iron for a long service life
- Rolling element bearings are lubricated for life to reduce maintenance
- Optimized spare parts inventories: Standardized components are interchangeable within this type series and with the waste water pumps of the Sewatec type series

Flexibility

Various installation types to suit different building structures

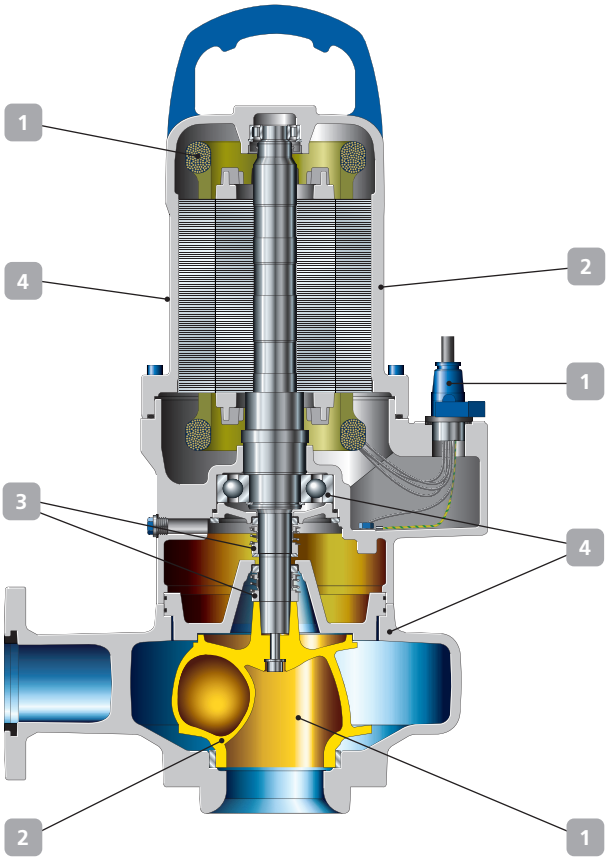

Installation options



Wet installation with guide wire



Wet installation with guide rail(s)



Horizontal dry installation



Vertical dry installation

Technical data

Sizes	DN 40 to 700, 1½ - 28 in.
Capacity	Up to 45,000 gpm
Head	Up to 330 ft.
Fluid temperature	Up to 140 °F
Automation possible	Yes

* IEC 60034-30 standard not binding for submersible motors. Efficiencies calculated/determined according to the measurement method specified in IEC 60034-2. The marking is used for submersible motors that achieve efficiency levels similar to those of standardized motors to the IEC 60034-30 standard.

KSB, Inc.
4415 Sarellen Road
Henrico, VA 23231
ksb.us.com

60067/PF/02.22/V1/US ©2022 KSB, Inc. All rights reserved. Content subject to change without prior notice.

ALL KRT SERIES SUBMERSIBLE PUMPS	TECHNICAL SPECIFICATIONS MATERIAL COMBINATIONS G1, G2, GH, H, C1, C2	May 05

INSTRUCTIONS:
The material combinations (G1, G2, GH, H, C1, C2) correspond to those listed in the KSB "KRT Catalogue". To specify pumps in the different material combinations, delete the paragraph titled "MATERIALS" found on page 1 of the standard specifications sheet, and replace it with the appropriate paragraph that best describes application requirements.

G1 (Cast Iron pump with Duplex Stainless Steel Impeller)

MATERIALS

SU□M□RS□□□□ S□W□□ □ PUMPS

- Pu□p C□se□C□st □ro□□□STM □□□□C□ss □□□
- Motor Hous□□□□C□st □ro□□□STM □□□□C□ss □□□
- □□pe□er□Dup□e□St□□□ess Stee□□STM □ □□□ CD□MCu
- □□ter□ed□□te Hous□□□ □□□c□p□□te□C□st □ro□□□STM □□□□C□ss □□□
- D□sch□r□e □□se □□ow□C□st □ro□□□STM □□□□C□ss □□□
- Pu□p□Motor Sh□□t□C□r□o□Stee□□STM □□□□□□r□□□□□ w□th rep□□ce□□□e □STM □□□□ T□pe □□□ sh□□t protect□o□ s□ee□e□□□OT□□□□s□ee□e □s □ot supp□□ed□e□□re sh□□t □s to □e □STM □□□□ T□pe □□□ st□□□ess stee□
- Sh□□t S□ee□e □□used□□St□□□ess Stee□□□STM □□□□ T□pe □□□
- We□r R□□□□c□se□C□st □ro□□□STM □□□□□ □□□□u□ □□□ □r□e□□
- We□r R□□□□□□pe□er□Dup□e□st□□□ess stee□□□S□□□□□□□□ □r□□e□
- O□R□□□s□□□tr□e Ru□□er □□□R□
- □□ste□ers □□c□ud□□□ □□pe□er □ste□er□St□□□ess Stee□□STM □□□□ T□pe □□□T□□
- □ower Se□□□□ces□S□□co□C□r□de□S□□co□C□r□de
- Upper Se□□□□ces□S□□co□C□r□de st□t□o□□r□C□r□o□rot□t□□□
- □u□de r□□s□c□□es □□d □ou□t□□□ □r□c□ets□St□□□ess Stee□□STM □□□□ T□pe □□□
- □□t□□□ Ch□□□or c□□□e□St□□□ess Stee□□STM □□□□ T□pe □□□
- O□□□□uses □se□□u□r□c□t□o□□etc□□□co□o□□c□□□s□□e□p□r□□□or □ □er□□□□se
- Power□Co□tro□C□□□e J□c□et□Ch□oropre□e w□th □o□w□c□□□ □□ers

G2 (Cast Iron pump with Hard Metal Impeller)

MATERIALS

SU□M□RS□□□□ S□W□□ □ PUMPS

- Pu□p C□se□C□st □ro□□□STM □□□□C□ss □□□
- Motor Hous□□□□C□st □ro□□□STM □□□□C□ss □□□
- □□pe□er□we□r res□st□□t h□□h chro□e wh□te □ro□□□ □□□□u□ □r□e□H□rd□ess R□t□□□ □□HR□o□□□□□□□□□□
- □□ter□ed□□te Hous□□□ □□□c□p□□te□C□st □ro□□□STM □□□□C□ss □□□
- D□sch□r□e □□se □□ow□C□st □ro□□□STM □□□□C□ss □□□
- Pu□p□Motor Sh□□t□C□r□o□Stee□□STM □□□□□□r□□□□□ w□th rep□□ce□□□e □STM □□□□ T□pe □□□ sh□□t protect□o□ s□ee□e□□□OT□□□□s□ee□e □s □ot supp□□ed□e□□re sh□□t □s to □e □STM □□□□ T□pe □□□

st□□□ess stee□
Sh□t S□ee□e □□used□St□□□ess Stee□□STM □□□□ T□pe □□□
We□r R□□□c□se□C□st ro□□□STM □□□□□ □□□u□ □□□ □r□e□
O□R□□s□□tr□e Ru□□er □□□R□
□□ste□ers □□c□ud□□ □□pe□er □ste□er□St□□□ess Stee□□STM □□□□ T□pe □□□T□
□ower Se□□□□ces□S□co□C□r□de□S□co□C□r□de
Upper Se□□□□ces□S□co□C□r□de st□t□o□r□C□r□o□rot□t□□
□u□de r□s□c□□es □□d □ou□t□□ □r□c□ets□St□□□ess Stee□□STM □□□□ T□pe □□□
□t□□ Ch□□ or c□□e□St□□□ess Stee□□STM □□□□ T□pe □□□
O□□□uses □se□□u□r□c□to□□etc□□□co□o□c□□s□e□p□r□□ or □ □er□□□se
Power□Co□tro□C□□e J□c□et□Ch□oropre□e w□th □o□w□c□□□ □□ers

GH (Cast Iron pump with Hard Iron Impeller & Back plate)

MATERIALS

SU□M□RS□□□ S□W□□ □ PUMPS

Pu□p C□se□C□st ro□□□STM □□□□C□ss □□□
Motor Hous□□□□C□st ro□□□STM □□□□C□ss □□□
□□pe□er□we□r res□st□□t h□□h chro□e wh□te ro□□□ □□□□u□ □r□e□H□rd□ess □□HR□o□□□□□□□□□
□□ter□ed□□te Hous□□□ □□□c□p□te□we□r res□st□□t h□□h chro□e wh□te ro□□□ □□□□u□ □r□e□H□rd□ess R□t□□□ □□HR□o□□□□□□□□□
D□sch□r□e □□se □□ow□C□st ro□□□STM □□□□C□ss □□□
Pu□p□Motor Sh□t□C□r□o□Ste□□□STM □□□□□□r□□□□□ w□th rep□□ce□□□e □STM □□□□ T□pe □□□ sh□t
protect□o□ s□ee□e □□□OT□□□□s□ee□e □s □ot supp□ed□e□tr□e sh□t □s to □e □STM □□□□ T□pe □□□
st□□□ess stee□
Sh□t S□ee□e □□used□St□□□ess Stee□□STM □□□□ T□pe □□□
We□r R□□□c□se□St□□□ess stee□□□S□□□□□□□□ □r□e□
O□R□□s□□tr□e Ru□□er □□□R□
□□ste□ers □□c□ud□□ □□pe□er □ste□er□St□□□ess Stee□□STM □□□□ T□pe □□□T□
□ower Se□□□□ces□S□co□C□r□de□S□co□C□r□de
Upper Se□□□□ces□S□co□C□r□de st□t□o□r□C□r□o□rot□t□□
□u□de r□s□c□□es □□d □ou□t□□ □r□c□ets□St□□□ess Stee□□STM □□□□ T□pe □□□
□t□□ Ch□□ or c□□e□St□□□ess Stee□□STM □□□□ T□pe □□□
O□□□uses □se□□u□r□c□to□□etc□□□co□o□c□□s□e□p□r□□ or □ □er□□□se
Power□Co□tro□C□□e J□c□et□Ch□oropre□e w□th □o□w□c□□□ □□ers

H (Cast Iron pump with complete Hard Iron Liquid End)

MATERIALS

SU□M□RS□□□ S□W□□ □ PUMPS

Pu□p C□se□□□pe□er□□□ter□ed□□te Hous□□□ □□□c□p□□te□□□□D D□sch□r□e □□se □□□ow□
we□r res□st□□t h□□h chro□e wh□te ro□□□ □□□□u□ □r□e□H□rd□ess R□t□□□ □□HR□o□□□□□□□□□
Motor Hous□□□□C□st ro□□□STM □□□□C□ss □□□
Pu□p□Motor Sh□t□C□r□o□Ste□□□STM □□□□□□r□□□□□ w□th rep□□ce□□□e □STM □□□□ T□pe □□□ sh□t
protect□o□ s□ee□e □□□OT□□□□s□ee□e □s □ot supp□ed□e□tr□e sh□t □s to □e □STM □□□□ T□pe □□□
st□□□ess stee□
Sh□t S□ee□e □□used□St□□□ess Stee□□STM □□□□ T□pe □□□
We□r R□□□c□se□St□□□ess stee□□□S□□□□□□□□ □r□e□
O□R□□s□□tr□e Ru□□er □□□R□
□□ste□ers □□c□ud□□ □□pe□er □ste□er□St□□□ess Stee□□STM □□□□ T□pe □□□T□
□ower Se□□□□ces□S□co□C□r□de□S□co□C□r□de □e□c□osed □s□urr□□t□pe□se□□des□□□□
Upper Se□□□□ces□S□co□C□r□de st□t□o□r□C□r□o□rot□t□□
□u□de r□s□c□□es □□d □ou□t□□ □r□c□ets□St□□□ess Stee□□STM □□□□ T□pe □□□

□□t□□□ Ch□□□ or c□□□e□St□□□ess Stee□□□STM □□□□ T□pe □□□
O□□□□□uses □se□□□u□r□c□t□o□□etc□□□co□o□c□□□s□□e□p□r□□□or □ □□er□□□□se
Power□Co□tro□C□□□e J□c□et□Ch□oropre□e w□th □o□□w□c□□□□ □□□ers

---

C1 (All stainless steel pump)

MATERIALS

SU□M□RS□□□□□ S□W□□ □ PUMPS

Pu□p C□se□Motor Hous□□□□□□□pe□□er□□□ter□ed□□te Hous□□□ □□□c□p□□te□□□□D D□sch□r□e □□se □□□ow□
Dup□e□St□□□ess Stee□□□STM □ □□□□CD□MCu
Pu□p□Motor Sh□□t□C□r□o□Stee□□□STM □□□□□□□r□□□□□ w□th rep□□ce□□□e □STM □□□□□T□pe □□□□sh□□t protect□o□□s□ee□e□□□OT□□□□s□ee□e□s□ot supp□ed□e□tre sh□□t□s to □e □STM □□□□□T□pe □□□□ st□□□ess stee□□
Sh□□t S□ee□e□□□used□□St□□□ess Stee□□□STM □ □□□□S □□□□□□
We□r R□□□□c□se□St□□□ess stee□□□□S□□□□□□□□□ □r□e□□
O□R□□□s□□□tr□e Ru□□er□□□□R□
□□ste□ers□□□c□ud□□□□□□pe□□er□□ste□er□□St□□□ess Stee□□□STM □□□□□T□pe □□□□
□ower Se□□□□ces□S□□co□□C□r□de□S□□co□□C□r□de
Upper Se□□□□ces□S□□co□□C□r□de st□t□o□□r□C□r□o□rot□t□□□
□u□de r□□s□c□□es□St□□□ess Stee□□□STM □□□□□T□pe □□□□she□thed□□Te□o□□PT□□□□
□u□de s□ste□□ou□t□□□□r□c□ets□St□□□ess Stee□□□STM □□□□□T□pe □□□□
□□t□□□ Ch□□□ or c□□□e□St□□□ess Stee□□□STM □□□□□T□pe □□□□
O□□□□□uses □se□□□u□r□c□t□o□□etc□□□co□o□c□□□s□□e□p□r□□□or □ □□er□□□□se
Power□Co□tro□C□□□e J□c□et□Ch□oropre□e w□th □o□□w□c□□□□ □□□ers

C2 (All stainless steel with alloy fasteners, viton elastomers & covered mechanical seal)

MATERIALS

SU□M□RS□□□□□ S□W□□ □ PUMPS

Pu□p C□se□Motor Hous□□□□□□□pe□□er□□□ter□ed□□te Hous□□□ □□□c□p□□te□□□□D D□sch□r□e □□se □□□ow□
Dup□e□St□□□ess Stee□□□STM □ □□□□CD□MCu
Pu□p□Motor Sh□□t□C□r□o□Stee□□□STM □□□□□□□r□□□□□ w□th rep□□ce□□□e □STM □□□□□T□pe □□□□sh□□t protect□o□□s□ee□e□□□OT□□□□s□ee□e□s□ot supp□ed□e□tre sh□□t□s to □e □STM □□□□□T□pe □□□□ st□□□ess stee□□
Sh□□t S□ee□e□□□used□□St□□□ess Stee□□□STM □ □□□□S □□□□□□
We□r R□□□□c□se□St□□□ess stee□□□□S□□□□□□□□□ □r□e□□ O□R□□□s□□□to□□□□M□
□□ste□ers□□□c□ud□□□□□□pe□□er□□ste□er□□St□□□ess Stee□□St□□□ess Stee□□□STM □ □□□□S □□□□□□
□ower Se□□□□ces□S□□co□□C□r□de□S□□co□□C□r□de□e□c□osed□s□urr□□t□pe□se□□des□□□□
Upper Se□□□□ces□S□□co□□C□r□de st□t□o□□r□C□r□o□rot□t□□□
□u□de r□□s□c□□es□□□d□□ou□t□□□□r□c□ets□St□□□ess Stee□□□STM □□□□□T□pe □□□□
□□t□□□ Rope□Po□□□□□de
O□□□□□uses □se□□□u□r□c□t□o□□etc□□□co□o□c□□□s□□e□p□r□□□or □ □□er□□□□se
Power□Co□tro□C□□□e J□c□et□Te□o□□PT□□□□or Ch□oropre□e w□th po□□□□□de she□th□□□

BACK TO MAIN KRT SPECIFICATION

KRT PUMP START-UP CHECKLIST

1. GENERAL INSPECTION

Includes:

- Check if the duplicate nameplate supplied with the pump is attached either to the control unit or well head.
- Check nameplates and operating data.
- Check the coolant level (Installation types K and D only)
- Check the oil level of the seal chamber (Installation types S and P only)
- Check the direction of rotation to assure the correct rotation of the impeller (Item 5.5.6 of O&M Manual).
- Check fitness of installation of pump discharge elbow (straight thru) whenever is possible (Item 5.2 and 5.6.1.4.3 of O&M Manual).
- Check fitness of installation of wall bracket and guide wire (Item 5.6.1.4of O&M Manual). (Guide Cable Installation). Make sure the guide wire has the specified tension.
- Check the entire assembly of the guide pipes (Guide Rail Installation)
- Check fitness of power/sensor cable(s) (Item 5.5.2 of O&M Manual). Lift and lower one pump to verify easy operation.

2. ELECTRICAL CONNECTIONS

Includes:

- Check if the electrical connection is in accordance with the Electrical connection diagram of the O& M Manual.
  When the power cable(s) of the pump has (have) six (6) conductors (T1, T2, T3, T4, T5 and T6), make sure the motor is connected in Δ connection (T1&T6 connected to L1, T2&T4 connected to L2 and T3& T5 connected to L3.
  The moisture and the thermal sensors should be connected to validate the warranty of the unit.
- Check function of monitoring devices and fill the Proof of Electrical Protection Form.
- Check the adjustment of over-current relay to FLA current.
- Check adjustment of level control switch.

3. RUN TEST

Includes:

- Check and register the power supply voltage and the amperage on each phase.
- Evaluate the flow and head whenever is required and whenever is possible and fill the Start-Up Form.
- Check the proper operation of the check valves and shut-off valves.

Regional San EchoWater Project: Stringent Requirements Demand Superior Equipment





In Partnership with:
G3 Engineering

EchoWater Project
Bringing Water Back

The Echowater Project is upgrading the existing Sacramento Regional Wastewater Treatment Plant located in Elk Grove, California. The facility is being renovated in order to meet the new treatment requirements set by the Central Valley Regional Water Quality Control Board (CVRWQCB) and State Water Resources Control Board (SWRCB).

REGIONALSAN

The project

Regional San was issued stringent new treatment requirements in 2010 from the State of California to make significant upgrades to the wastewater treatment plant. The new system, with a targeted completion date in 2023, will produce cleaner water for discharge to the Sacramento River, as well as the potential reuse of recycled water (e.g. for landscape and agricultural irrigation).

This major upgrade has been given the name of "EchoWater Project" to reflect how it will utilize and process the wastewater, returning it to a clean, natural state – in the same manner that an "echo" returns to its source of origination. Once completed, Regional San will be in compliance with its regulatory permits and improve water quality by resulting in a 99 percent reduction in ammonia discharged to the Sacramento-San Joaquin River Delta. Ultimately, EchoWater will be capable of meeting the region's needs and protecting the waterways for generations to come.

PROJECT SPOTLIGHT

The EchoWater Project, which is one of the largest public works projects in Sacramento's history, comprises structures from several other projects, including Biological Nutrient Removal (BNR) tanks, granular media filters, disinfection basins, pumping stations, electrical buildings, and support facilities. The BNR process will eliminate nearly all ammonia and most nitrate, while filtration processes will help remove smaller particles and pathogens from the effluent. Enhanced disinfection will also be implemented to inactive pathogens.

Key Success Factors

Meeting rigorous reliability and energy efficiency requirements, KSB pumps and mixers serve the heart of the plant. The KSB equipment, supplied in three different project phases, will play a critical role in achieving the stringent requirements issued by the State of California. Additionally, the experience and expertise of KSB and KSB manufacturer representative, G3 Engineering, greatly contributed in the selection process for this complex and highly demanding project.









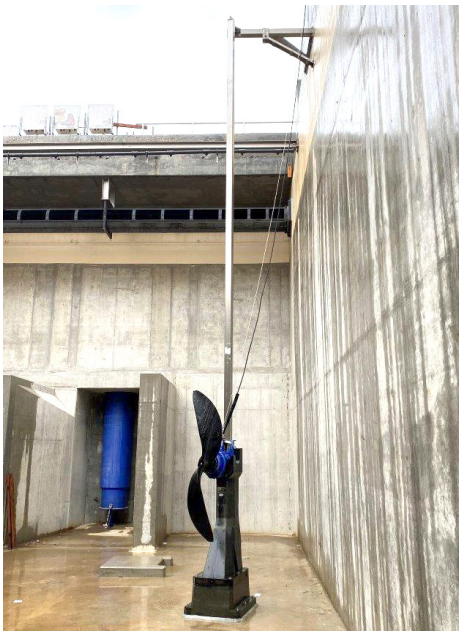

KSB Equipment	Applications	Qty.
KRT Pumps	**Nitrifying Sidestream** Waste Activated Sludge, Stormwater, Mixed Liquor	20
	Biological Nutrient Removal Wet Well Drainage, Primary Effluent Jetting, Bay Drainage, Gravity Diversion Drainage, CFE Drainage, Ox6 Scum Pumps, PE Splitting Scum Pumps, Deoxygenation Scum Pumps, RAS Pre-Anoxic Scum Pumps, Stormwater, Mixed Liquor Flow Splitting Scum Pumps	27
Amaprop Mixers	Mixed Liquor Fermenter and Anaerobic Mixing, Deoxygenation Mixing, RAS/Pre-Anoxic Channel Mixing	54
Sewatec Pumps	Waste Activated Sludge, Mixed Liquor Fermenter, Drainage	14
Amacan P Pumps	Mixed Liquor Recycle	16



KSB, Inc.
4415 Sarellen Road
Henrico, VA 23231
ksb.us.com

50600/PS/12.20/V1/US ©2020 KSB, Inc. All rights reserved. Subject to change without prior notice.

Project Name: Chandler Reclaimed Water Interconnect Facility
Project No. WW1901.402

Work Category: **11E - Self Cleaning Strainers**

Date: 4/12/2022 Rev 6/1/2022

Recommended

	COMPANY INFORMATION	**Coombs Hopkins & R.P. Adams**	Hennesy Equipment Sales & S.P. Kinney	IES Southwest & Amiad		
		Jason Vernon	Tod Hammon	Joel Wade		
		(602) 363-6755	(602) 277-7268	(623) 760-5720		
		jason@chcwater.com	tod@hennesyequipment.com	joel@iessouthwest.com		
	TOTAL WORK CATEGORY PACKAGE VALUE	**$503,416**	**$470,872**	**$210,672**		
	MCCARTHY SUBCONTRACT & FRONT END TERMS					
1	Compliant with McCarthy Front Ends	Yes	No	Yes		
2	Bid Submitted on McCarthy Bid Form	Yes	No	Yes		
3	Bid Bond Included with Bid (if over $500K Sub/$1M Supplier)	n/a	n/a	n/a		
4	Surety Company	n/a	n/a	n/a		
5	Surety AM Best Rating (Must be A- or Better)	n/a	n/a	n/a		
6	AM Best Financial Size X($500M to $750M) or higher	n/a	n/a	n/a		
7	Anticipated contract amount is less than the Federal UW Limit as listed on the Treasury Listing	n/a	n/a	n/a		
8	Bond/CDI Cost	1.295%	1.295%	1.295%		
9	Included Insurance Requirements (Per Matrix)	$1M/CGL	$1M/CGL	$1M/CGL		
10	GL Insurance Company Name	National Union Fire Insurance Co of	n/a	Allianz Global Risk US Ins Co		
11	GL Insurance Carrier AM Best Rating (Must be A- or Better)	Yes	n/a	Yes		
12	PRL Insurance (If required by the Front Ends)	n/a	n/a	n/a		
13	Pollution Insurance (If required by the Front Ends)	n/a	n/a	n/a		
14	Tier 1 Approved	No	No	No		
15	Tier 2 Approved	No	No	No		
16	Safety Items:	Yes	Yes	Yes		
17	OSHA Recordable Incident Rate (Current)	n/a	n/a	n/a		
18	Agrees to comply with PPE requirements including 100% glove policy	Yes	Yes	Yes		
19	Acknowledges updated ladder policy (platform ladders)	Yes	Yes	Yes		
20	Task Hazard Analysis included for all tasks	Yes	Yes	Yes		
21	Tie-off above 6' required	Yes	Yes	Yes		
22	Includes Hoisting for Sub's Own Work Scope	n/a	n/a	n/a		
23	Acknowledges Soils Report	n/a	n/a	n/a		
24	Acknowledges Addenda	Yes	No	Yes		
25	Hold Bid for 180 Days	No	No	No		
26	Pricing good for the duration of the project	Yes	No	Yes		
27	Sales Tax Included	No	No	No		
28	**Market Questions**					
29	Have you experienced and/or do you anticipate any issues with existing suppliers or vendors?	No	No	No		
30	Do you have any overseas suppliers that may be impeding your supply chain?	No	No	No		
31						
32	Per Plans & Specifications	Yes	Yes	Yes		
33	Division 1 as it relates to this scope of work	Yes	Yes	Yes		
34	01010 - Summary of Work	Yes	Yes	Yes		
35	01300 - Submittals	Yes	Yes	Yes		
36	01640 - Materials and Equipment	Yes	Yes	Yes		
37	01650 - Starting of Systems	Yes	Yes	Yes		
38	01660 - Field Tests of Equipment	Yes	Yes	Yes		
39	01730 - Operation and Maintenance Data	Yes	Yes	Yes		
40	01750 - Spare Parts and Maintenance Materials	Yes	Yes	Yes		
41	01821 Instruction of Operations and Maintenance Personnel	Yes	Yes	Yes		

Project Name: Chandler Reclaimed Water Interconnect Facility
Project No. WW1901.402

Work Category: **11E - Self Cleaning Strainers**

Date: 4/12/2022 Rev 6/1/2022

Recommended

	COMPANY INFORMATION	**Coombs Hopkins & R.P. Adams**	Hennesy Equipment Sales & S.P. Kinney	IES Southwest & Amiad		
		Jason Vernon	Tod Hammon	Joel Wade		
		(602) 363-6755	(602) 277-7268	(623) 760-5720		
		jason@chcwater.com	tod@hennesyequipment.com	joel@iessouthwest.com		
	TOTAL WORK CATEGORY PACKAGE VALUE	**$503,416**	**$470,872**	**$210,672**		
42	09900 - Painting	Yes	No	Yes		
43	11295 - Hydraulic Valves	Yes	No	No		
44	11320 - Self-Cleaning Strainers	Yes	Yes	Yes		
45	Division 16 - Electrical	Yes	No	No		
46	Division 17 - Instrumentation	Yes	No	No		
Scope of Work						
Base Bid:		$495,000	$462,872	$205,999		
47	Provide all labor, materials, tools, equipment and appurtenances as required to perform the Work Category 11E- Self-Cleaning Strainers, in accordance with and reasonably inferable from the Contract Documents, complete and without exception unless otherwise noted below, including, but not limited to the following:	Yes	Yes	Yes		
48	Check to Spec completed and submitted to McCarthy	Yes	No	Yes		
49	Acceptable Manufacturer: **Amiad, R.P. Adams, S.P. Kinney,** or approved equal	R.P. Adams	S.P. Kinney	Amiad		
50	**TAG: SD-100, SD-200, SD-300**	Yes	Yes	Yes		
51	Flow Rate: 5 MGD	Yes	Yes	Yes		
52	Minimum Working Pressure: 18 PSI	Yes	No	Yes		
53	Maximum Design Pressure : 150 PSI	Yes	Yes	Yes		
54	Minimum Design Water Temp: 20-degrees Celsius	Yes	Yes	Yes		
55	Desired Solids Removal: 500 microns	Yes	460 MICRONS	Yes		
56	Inlet/Outlet Diameter: 16" flanged (drilling conform to 150 lb. ANSI)	Yes	Yes	Yes		
57	Motor:	Yes	Yes	Yes		
58	meets requirements of Section 16225	Yes	Yes	Yes		
59	480V/3ph/60Hz	Yes	Yes	Yes		
60	Minimum Motor HP: 0.5	Yes	Yes	Yes		
61	Maximum Motor Speed: 1,800 RPM	Yes	Yes	Yes		
62	Motor Enclosure: TEFC premium efficiency, with Class H insulation	No	No	Yes		
63	Motor Service Factor: 1.15 at altitude	Yes	No	Yes		
64	Strainer Unit:	Yes	Yes	Yes		
65	Body and Drum: carbon steel or cast iron	Yes	Yes	Yes		
66	automatic, self-cleaning type	Yes	Yes	Yes		
67	Strainer Element: openings 500 micrometers, perforated or punched hole 316L SST. Wedge wire not acceptable.	Yes	460 MICRONS	Yes		
68	Backwash Mechanism:	Yes	Yes	Yes		
69	facilitated backwashing strainer element while maintaining forward flow through strainer unit.	Yes	No	Yes		
70	includes actuated hydraulic valve to control BW waste discharge	Yes	No	No		
71	shall operate under positive pipeline pressure on discharge side or downstream from pump. A valve on backwash discharge pipe shall control pressure drop and amount of water wasted in back flushing	Yes	No	No		
72	shall operate under suction condition on the intake or upstream side of pump. Backwash water from pump discharge shall be piped and valved to strainer.	Yes	No	No		
73	Backwash Assist Pump Qty: Three (one per strainer)	Yes	Yes	Yes		
74	Backwash Assist Pump: Motor	Yes	Yes	Yes		
75	meets requirements of Section 16225	Yes	Yes	Yes		

Project Name: Chandler Reclaimed Water Interconnect Facility
Project No. WW1901.402

Work Category: **11E - Self Cleaning Strainers**

Date: 4/12/2022 Rev 6/1/2022

Recommended

	COMPANY INFORMATION	**Coombs Hopkins & R.P. Adams**	Hennesy Equipment Sales & S.P. Kinney	IES Southwest & Amiad		
		Jason Vernon	Tod Hammon	Joel Wade		
		(602) 363-6755	(602) 277-7268	(623) 760-5720		
		jason@chcwater.com	tod@hennesyequipment.com	joel@iessouthwest.com		
	TOTAL WORK CATEGORY PACKAGE VALUE	**$503,416**	**$470,872**	**$210,672**		
76	Motor Enclosure: TEFC with Class H insulation, max speed: 3,450 RPM	No	No	No		
77	480V/3ph/60Hz	Yes	Yes	Yes		
78	Max HP: 15	Yes	No	Yes		
79	Service Factor: 1.15	Yes	No	Yes		
80	Locked rotor current per NEMA standards	Yes	No	Yes		
81	Motor thrust bearings to carry continuous thrust loads, minimum B-10 life of 100,000 hours.	Yes	No	Yes		
82	motor SS nameplate	Yes	No	Yes		
83	Oversized motor terminal box	Yes	No	Yes		
84	Inspection Port: on side of strainer, with easily removable cover plate.	Yes	Yes	Yes		
85	Instrumentation:	Yes	Yes	No		
86	Differential Pressure Switch: factory connected to inlet and outlet piping	Yes	Yes	No		
87	Timers (integrated into the PLC), backwash initiation timer, backwash duration timer	Yes	No	No		
88	Pressure Gauges	Yes	Yes	No		
89	Control Systems: Local Control Panel in accordance with Division 16 and 17.	Yes	Yes	Yes		
90	Stainless Steel Identification nameplate	Yes	Yes	Yes		
91	Shop Test:	Yes	No	Yes		
92	Hydrostatic Test: 1 1/2 times working pressure. Test for pressure drop at max flow with clean media	No	No	Yes		
93	Witnessed by Registered Professional Engineer (may be employee of mfg.). Thew Professional Engineer shall seal and sign all test reports.	No	No	No		
94	Routine motor test at mfg. factory: running light current, locked rotor current, winding resistance, high potential, and bearing inspection.	Yes	No	Yes		
95	Strainer manufacturer shall be assigned Unit Responsibility for all equipment provided in this Section. A Certificate of Unit Responsibility shall be provided.	Yes	No	Yes		
96	Warranty: 12 months from Project Substantial Completion	Yes	No	Yes		
97	Provide structural and anchorage calculation	$1,500	$1,500	$1,500		
98	Provide all anchors per requirement of Section 05051, and epoxy required for the installation of the equipment	$480	$480	$480		
99	Surface prep and shop paint all surfaces per the requirements of the 09900 - Painting	Yes	No	No		
100	Shipping shall be FOB jobsite	Yes	Yes	Yes		
101	Unloading & storage	n/a	n/a	n/a		
102	Temporary protection & enclosure	n/a	n/a	n/a		
103	Preventative maintenance	n/a	n/a	n/a		
104	O&M's per specification section 01781	Yes	No	Yes		
105	Training: minimum 1 trip - 1 person day	Yes	No	Yes		
106	Spare Parts per the Specifications: provide "standard" spare parts list with pricing, 1-set of expendable materials such as gaskets, seals, and packing, 2-sets (new and unused) special tools, 3 ea. screen repair kit, reagents/chemicals, calibration sets, and spar parts specified for each equip and instrument provided, list of recommended spart parts and materials for first 12 months of system operation	Yes	No	Yes		

Project Name: Chandler Reclaimed Water Interconnect Facility
Project No. WW1901.402

Work Category: **11E - Self Cleaning Strainers**

Date: 4/12/2022 Rev 6/1/2022

Recommended

	COMPANY INFORMATION	**Coombs Hopkins & R.P. Adams**	Hennesy Equipment Sales & S.P. Kinney	IES Southwest & Amiad		
		Jason Vernon	Tod Hammon	Joel Wade		
		(602) 363-6755	(602) 277-7268	(623) 760-5720		
		jason@chcwater.com	tod@hennesyequipment.com	joel@iessouthwest.com		
	TOTAL WORK CATEGORY PACKAGE VALUE	**$503,416**	**$470,872**	**$210,672**		
107	Manufactures Services: minimum 1 trip - 1 person days installation assistance/supervision, 1 trip - 1 person day installation inspection and start-up, 1 trip - 1 person day onsite for training. Manufacturer shall re-visit the site as often as necessary until all trouble is corrected and the installation is entirely satisfactory.	Yes	No	Yes		
108	Delivery Lead Times: after submittal approval and released for fabrication.	20-24 weeks	No	20-22 weeks		
109	***Escalation Moved F2 Esclation Allowance (Not Calculated in Total WC)***	$49,500	$46,287	$20,600		
110	COVID-19 Scope Items					
111	Proposal includes CDC, Federal, State and Local OSHA guidelines for COVID-19.	Yes	Yes	Yes		
112	Your proposal shall include all productivity, schedule, and other impacts to cost and schedule.	Yes	Yes	Yes		
113	All personnel onsite must maintain 6'0" spacing between personnel and shall have facemasks on at all times that align with CDC, Federal, State or Local OSHA guidelines for COVID-19.	Yes	Yes	Yes		
114	Any personnel reporting symptoms must be immediately reported to McCarthy and follow the appropriate testing and quarantine protocols.	Yes	Yes	Yes		
115						
116	End of Scope					
	Bond/CDI Cost	$6,436	$6,020	$2,693		
	TOTAL WORK CATEGORY PACKAGE VALUE	**$503,416**	**$470,872**	**$210,672**		

Phone: 412-276-4600
Fax: 412-276-6890
www.spkinney.com
Email:Gbilligen@spkinney.com

S. P. KINNEY ENGINEERS, INC.
143 FIRST AVENUE • P.O. BOX 445 • CARNEGIE, PA 15106

March 23, 2022

WILSON ENGINEERING
CHANDLER, AZ
c/o
Hennesy Equipment

Attention: Mr. Tod Hammon
Email:tod@hennesyequipment.com
Phone: 602-277-7268

Subject: S. P. Kinney Automatic Self-Cleaning Strainer(s) for...
16" Model "AP"

SPK Proposal: File KN-42221- A-GJB

Gentlemen:

Per your most recent inquiry, we are pleased to offer for your consideration the equipment as listed below and described in the attached circulars and drawings - subject to the enclosed terms and conditions.

S. P. KINNEY AUTOMATIC STRAINERS

MOTORIZED SELF-CLEANING DESIGN

of the

HEAVY DUTY, ROTATING DRUM TYPE

We are pleased to offer the following....

ITEM #1

THREE (3) - 16" Kinney Model "AP" Automatic Self-Cleaning Strainer as shown on typical Drawing # 25923, Bulletin #512 and further described below, we are pleased to offer…

CONSTRUCTION:

Body -	Cast Iron
Cover & Bonnet -	Cast Iron
Drum -	Cast Iron
Shaft -	Fabricated Steel; Ceramic Coated
Backwash shoe-	Cast Iron
Media	1/64 Perforated Delrin Discs, (460 microns)
Inspection Window Cover -	Transparent
Packing Assembly -	915DN

SERVICE CONDITIONS:

Strainer design capacity when in use on a fresh water system will exhibit an approximate pressure drop of < 1.87 psig (clean) for normal flows of 3,500 USGPM

Design Pressure:	150 psig @ 100°F
Minimum Working Pressure:	2 psig
Normal Working Pressure:	2 - 20 psig
Hydrostatic Test Pressure:	225 psig

STRAINER DRIVE & MOTOR:

1.5 HP, 230/460 Volts, 3 Phase, 60 Hertz, 1800 RPM, Totally Enclosed Fan Cooled

Strainer Dry Weight (approx): 8,900 Lbs. Each

We offer the following

AUTOMATIC BACKWASH CONTROLS / ACCESSORIES

ONE (1) PER AUTOMATIC STRAINER - Control system consisting of a motor operated valve(s) and accessories as described below, we are pleased to offer…….

(1) 3" Wafer Valve complete with electric operator for installation in the backwash inlet manifold.

(1) 3" Wafer Valve complete with electric operator for installation in the backwash discharge manifold.

(1) Pressure Differential Switch

(2) Pressure Gauges

(1) Control Panel – Standard (Size: 25.5"H x 16" W x 9"D)

S. P. Kinney's standard controller is a NEMA 4X 316 SS Classified Control Station –

Which is AS PER SPECIFICATIONS

NOTE: The strainer control panels are suitable for wall mounting - not free standing. The price quoted includes only the hardware as listed, internally pre-wired to a terminal block. External wiring from the strainer motor, backwash valve, differential pressure switch to the panel and the labor to wire are not included and is to be done in the field by others.

2 Days Start up and Training **$2,000.00**

LUMP SUM……..US$ 462,872.00

NOTES

GENERAL NOTES

G1). This quotation does include field installation or supervision.

G2). The equipment will be completely factory assembled and palletized for shipment. Identification marking will be per customer instruction.

G3). Equipment installation does not form a part of this offer. Leveling shims, field grouting and anchor bolts are to be supplied by others, at time of installation.

DRAWINGS & MANUALS

D1). Pricing includes documentation submittals as follows:

A). Certified Drawings - Three (3) Copies

B). S.P. Kinney Standard Installation, Operation and Maintenance Manuals – One (1) Hard and one (1) Electronic copy. Each manual contains; dimensional drawings, spare parts lists, installation, operation and maintenance procedures and lubrication data.

NOTE: Any additional standard IO&M manuals shall be supplied at an additional cost of US$250.00/ EA. Any manuals of a special nature, other than SPK standard manual, shall be priced accordingly as required by specifications or by customer request based on type and quantity of manuals required.

D2). All drawings associated with the proposal should be considered "typical", and for reference only. After receipt of formal purchase order, certified drawings shall be submitted for approval. If waived, certified drawing will be submitted for record purposes.

TECHNICAL NOTES $ EXCEPTIONS

T1). Replacement parts are neither INCLUDED OR REQUIRED at start-up nor anticipated within the first two (2) years of operation.

T2). The factory testing will consist of hydrostatic pressure test, motor run test and dimensional verification. Purchaser and/or his representatives are welcome to witness these tests. All additional test requirements invoked by the Purchaser will be evaluated and quoted upon review.

E1) SPECIFICATIONS 11320 SPARE PARTS FOR PLC HARDWARE

PRICING & DELIVERY NOTES

P1). Prices quoted are FOB: Our Factory, FULL FREIGHT ALLOWED
(FREIGHT WILL BE ADJUSTED AT TIME OF SHIPMENT)

P2). Any applicable Federal, State, GST & Provincial type taxes are not included and are for purchaser account.

P3). The prices offered above will remain firm for a period not to exceed SIXTY (60) days from the date of this offer.

P4). Terms of sale: 100% Net 30 days. Orders in excess of US$200,000.00 are subject to progressive payments as follows:

Order Placement	10%
Completion of engineering submittals	20%
Raw material delivery	30%
50% manufacturing completed	30%
Shipping, ex-works	10%

P5). Proposed delivery: 30 Weeks after FINAL approval

We trust the proposal offered above meets with your approval. If we may be of any additional service, please do not hesitate to contact us.

Very truly yours,

S. P. KINNEY ENGINEERS, INC.

Greg Billigen

Enclosures:
Bulletins: # 512
Drawings: # 25923

BID PROPOSAL

Date 30 March 2022

Bid Proposal of * Amiad USA (hereinafter called "Bidder")

a ** corporation organized and existing under the laws of the State of

North Carolina.

* Insert name of firm.
** Insert corporation, partnership, or individual, as applicable.

(INSERT OWNER'S ADDRESS)
TO: McCarthy Building Companies, Inc.
6225 North 24th Street, Suite 200
Phoenix, Arizona 85016

The Bidder, in compliance with your Invitation for Bids for the construction of Chandler Reclaimed Water Interconnect Facility having examined the Contract Documents entitled City of Chandler, Reclaimed Water Interconnect Facility Project, and other related documents and being familiar with the site of the proposed work, and with all of the conditions surrounding the construction of the proposed project including the availability of materials and labor, and the progress of work to date, if any, hereby proposes to furnish all labor, materials, tools, equipment, machinery, equipment rental, transportation, superintendence, perform all work, provide all services, and to construct all work in accordance with the Contract Documents set forth herein, and at the prices stated below. These prices are to cover all expenses incurred in performing the work required.

The Bidder shall attach a copy of Bidders' detailed estimate to its Bid Proposal. This estimate shall identify all quantities shown in the documents or anticipated along with corresponding labor, material and equipment pricing.

After Bid Proposals are received, tabulated, and evaluated by McCarthy, said Bidder agrees to meet with McCarthy for the purpose of determining any duplications, omissions, or mutually agreed bid adjustments. For these meetings, the Bidder agrees to provide a complete, detailed cost breakdown; a list of all sub-subcontractors proposed for use in the work; and a list of all items, materials and their manufacturers proposed for use in the work.

The Bidder, if awarded a Subcontract, agrees to commence work and to fully complete its Work in accordance with a schedule to be established in collaboration with McCarthy under the provisions of the Additional Subcontractor Conditions of the Specifications.

The Bidder acknowledges receipt of the following Addenda: Addendum 1, Addendum 2,

.

BASE BID:

The Bidder agrees to perform all fabrication, installation, and training as specified in the proposal (herein insert the title of the Work Category as it appears in the Additional Subcontractor Conditions) Work for Work Category No. 01A, 01D, 11H, as described in the Contract Documents, for the Lump Sum of _____ to be sold by IES Southwest DOLLARS ($_____).

BID BREAKDOWN:

Raw Water PS	$_____
Membrane Facility/Strainer	$To be quoted by IES-Southwest
Chemical Facility	$_____
Blower Building	$_____
Electrical Building	$_____
Chlorine Contact Basin	$_____
Site Work	$_____
Performance & Payment Bond Cost *(If Applicable)*	$_____
Total Subcontract Amount	$_____

The name of the proposed Bonding Company is N/A

Bond rate _____%

All applicable taxes, except sales and use taxes on materials and equipment which are affixed and made a part of the real estate of the Project, are included in the above Base Bid. Bidder agrees that this Bid Proposal shall be good and may not be withdrawn unless McCarthy does not send Bidder a Subcontract within one hundred eighty (180) calendar days after the opening date of Bid Proposals.

(Amounts shall be shown in both words and figures. In case of discrepancy, the amount shown in words will govern.)

ALTERNATES:

The Bidder further agrees that if any or all of the Alternates listed and described below are incorporated and accepted within sixty (60) calendar days after receipt of a Subcontract from McCarthy, the Bidder will adjust its Subcontract by the amount indicated opposite the Alternates listed below.

ALTERNATE NO. 1: Canopy and Bridge Crane @ Membrane Facility:

ADD the sum of $_____.

CHANGE ORDER RATES: (Add separate sheet as needed)

Markup % (on rates and material): _____.

Position: _____ Rate: _____.

Equipment: _____ Rate: _____.

The Bidder understands that McCarthy reserves the right to reject any or all Bid Proposals and to waive any informalities or irregularities therein.

SELECT AS APPROPRIATE

☑ The Bidder has completed the Prequalification Form together with all other required data for McCarthy's' Contractor Default Insurance Program; OR Bidder is in process of renewing the Prequalification Form

☐ The Bidder has not completed the Prequalification Form together with all other required data for McCarthy's' Contractor Default Insurance Program because the Bidder has provided the Form and all such information to McCarthy in the past 12 months for the following project:

_____ Project, which bid on: _____.

RESPONSIVE BID REQUIREMENTS:

DO NOT ENCLOSE YOUR STANDARD TERMS AND CONDITIONS

If any exceptions are taken to the requirements of this Proposal form, attach a separate sheet listing those exceptions, stating the sections and paragraphs and the specific exception.	SM (initials)
Please find exceptions to check to spec submitted on a separate sheets	
In submitting this proposal, the Bidder certifies that this bid is valid for 180 calendar days.	(initials)
Our proposal is valid for ~~90~~ 30 days from date of quote (22 Mar 2022)	SM
In submitting this Proposal as described herein, we agree to complete the work in accordance with the included Preliminary Construction Sequence.	SM (initials)
In submitting this Proposal, the Bidder certifies that all cost for extended warranties to start on the date of Substantial Completion is included.	SM (initials)
No extended warranties are offered.	
In submitting this proposal as described herein, we confirm that we have received, reviewed and agree to all commercial terms stated in the McCarthy Subcontract and Purchase Order Agreement. Any exception taken to the commercial terms stated in these Agreements must be listed on a separate sheet noting the article or paragraph and the specific exception. ***Bidders attached Standard Terms and Conditions will not be acknowledged or accepted as part of any given bid.***	(initials)
We have not reviewed the Purchase Order Agreement and it has yet to be reviewed by our legal department.	
In submitting this proposal as described herein, the Bidder certifies that this bid is coordinated based on a complete set of documents and that there will be no claims for change order based on the assertion that the Bidder did not have a complete set of Bidding Documents.	SM (initials)
In submitting this proposal, the Bidder certifies that they have included all spare parts, training, O & M Manuals, shop drawings and administration costs as associated to comply with the requirements of the specifications and as listed for their scope of work.	SM (initials)
A bid will be considered non-responsive if the Subcontractor Pre-Qualification Form is not completed as part of the Bid Form **(or on file at McCarthy office)**.	SM (initials)
We are in the process of renewing our Pre-Qual form with McCarthy	
The Bidder, by submitting their bid, represents that they have read and understand the scope requirements of the Bidding Documents.	SM (initials)

The Bidder certifies that any proposed materials in this scope of work meet or exceeds the requirements stated in the specifications unless noted otherwise within this proposal.	SM (initials)
The bidder certifies that the price listed in this bid is a firm Price through the final delivery of the materials proposed herein, and that no material escalation will be accepted as part of this proposal.	SM (initials)

Within fifteen (~~10~~ (15)) days after receipt by the Bidder from McCarthy of the Subcontract or Purchase Order, the Bidder will execute and return to McCarthy said Subcontract or Purchase Order and if notified from McCarthy that Bidder is not to be enrolled in McCarthy's Contractor Default Insurance Program, deliver to McCarthy Performance and Labor and Material Payment Bonds for the Subcontract or a Supply Contract Bond for the Purchase Order, or the difference between the amount of the bid and such larger amount for which McCarthy may subcontract with another party to perform the work covered by said bid, together with all court costs, all attorney fees and all other expense of recovery, all of which shall not exceed the Bid Security attached in the amount of 15% of the bid, will become the property of McCarthy. The bonds shall name McCarthy as Obligee.

If an Individual:

Authorized Signature: _____

Name (print): _____

Email: _____

Business Address: _____

_____

If a Partnership:

Authorized Signature: _____

Name (print): _____

Email: _____

Authorized Signature: _____

Name (print): _____

Email: _____

Business Address: _____

_____

If a Corporation:

Authorized Signature: Scott Maddox

Name (print): Scott Maddox 3-31-2022

Email: scott.maddox@amiad.com

Title: National Sales Manager

Business Address: 120-J Talbert Road

Mooresville, NC 28117

Telephone 1.704.662.3133

Contractor License Number: _____

General Liability Insurance Carrier (not the agent): _____

*Please attach a sample certificate of insurance and current W9 form to your bid. Sent as separate attachment 3/31/22

amiad water systems

Proposal Package-R2

Proposal Number: IE-ABF10KILX-121521-R2 Date: 4/5/2022

Company Name: McCarthy Building Companies, Inc

Attn: Jason House
Tel: (972) 322 1125
E-mail: jjouse@mccarthy.com

Project Name: City of Chandler, Arizona
Reclaimed Water Interconnect Facility Project
City project No. WW1901.203

Engineering Firm: Wilson Engineers

Specification Section(s): 11320-Self-Cleaning Strainers-100% submittals (February, 2022)

Given Design Criteria

Application Description: 2+1 system design (see clarification for recommended installation)
16" flange connection
Separate controller for each filter
Separate backwash assist pump to address the possible low operating pressure

System Flow Rate: 3475 gpm / per filter (5 MGD)
Filtration Degree: 500 µ
Water Source: Process water
Water Use: Pre Membrane
Stated Operating Pressure: 18 psi (Minimum)
Stated Operating Temperature: 20 °C (Minimum)
Available Power: 480V AC, 3-Ph, 60 Hz
Stated TSS: Not provided

Amiad Contact Information

Regional Sales Manager: Ruben Delgadillo
Telephone: ***(925) 550 9458***
E-mail: ruben.delgadillo@amiad.com

Quotations Department Contact: Hetti Perera
Telephone: (704) 235 6450
E-mail: hetti.perera@amiad.com

amiad water systems

Proposal Package - Pricing

Proposal Number: IE-ABF10KILX-121521-R2

Item	Quantity	Part Number and Description	Unit Net Price (USD)	Extended Net Price (USD)
1	3	16" ABF-10000 In-line automatic self-cleaning filter body, epoxy coated carbon steel, with 150 lb ANSI inlet and outlet flanges, with 3" electrically actuated flush valve (full port ball valve) with S70/120V AC actuator, with 1.0 hp premium eff. NEMA rated Baldor motor and routine test per specs requirements, with necessary adaptors and couplings, with stainless steel name plate	$ 64,476.73	$ 193,430..19
2	3	500 micron screen element, ABF-10000, 316 stainless steel, perforated	Included	
3	3	**Backwash assisted pump**: Gould's model 3657M, end suction centrifugal horizontal pump, cast iron/bronze fitted material, with 10 HP, 1750 RPM,TEFC motor to meet the specification requirements (section 16225); pump operating point shall be 310 gpm @ 30 psig)	Included	
4	3	Accessories required for backwash assist pump operation: 1 x 3" ARI flow indicating check valve, 2 x pressure gauge (suction and discharge), 1 x 3" manual throttle valve/lever operated	Included	
5	3	AML3 controller for single (1) filter control, with Allen Bradley MicroLogix 1400 PLC & PanelView 800 color touch HMI, 480/3/60 power supply, UL approved, with NEMA 4X enclosure, with power and signal to electric flush valve and backwash assist pump, with dry contact output for filter flush in progress and fault; with input for remote filter flush (input to be generated by customer's SCADA system depend on the pressure available in the system); with backwash lockout to prevent simultaneous backwash of the filters (filters will be backwashed sequentially and one after the other); with provisions to backwash the filter system with or without backwash assist pump depending upon the pressure available in the system.	Included	
6	1	Complete submittals and O&Ms	Included	
7	3	On site service of Amiad's technical representative for installation check, adjustments, and training (1 day- including traveling, lodging, meals, and incidentals)-3 separate visits to meet the specification requirements	$ 3,500.00	$ 10,500.00
			FILTRATION LOT PRICE	**$ 203,930.19**

Deduction

8	3	**Net cost deduction** to provide 16" ABF-10000HF **On-line** High Flow filter in lieu of the in-line filters in item #1above (refer to the conceptual drawings included in this proposal to identify the difference between the in-line and On-line models. All other features in item #1 remain unchanged)	$ 5,850.00	**$ 17,550.00**

Adders:

Item	Quantity	Recommended Spare Parts: (Per filter)/for 12 months period		Unit Net Price	Extended Net Price
9	2	770104-000076	Cylinder seal	$ 50.85	$ 101.70
10	1	770102-000188	Housing O-ring P2-471	$ 21.15	$ 21.15
11	2	770101-000053	O-ring 32 x 4	$ 5.40	$ 10.80
12	1	770101-000055	External flange O-ring	$ 5.40	$ 5.40
13	2	710103-001885	Stainless steel brush	$ 164.25	$ 328.50
14	1	700101-000858	500 micron perforated screen element	$ 1,600.30	$ 1600.30
				SPARE PARTS LOT PRICE	**$ 2,067.85**

Shipping Point: Mooresville, NC (ExWorks Seller's Factory)
Terms of Payment: Net thirty (30) days.
Estimated Delivery: 20-22 weeks, ARO and approval of all submittal items

Amiad's standard terms and conditions will apply. A copy of this standard Terms and conditions has been included in this proposal.

Notes:

1. **A non-return check valve is required at the outlet of each filter as backflow to the above filter will damage the screen. - VALVE TO BE PROVIDED BY OTHERS**
2. **Filed wirings to be done by others.**
3. Terms and Conditions:
   A. Prices are valid for ninety (90) days from the date of quotation. Any changes to the proposed items will nullify this quote and change shipping times.
   B. The above equipment is designed for use in North America only. Shipment or use outside of North America without the express written consent of Amiad Filtration Systems will void equipment warranty.
4. ***Minimum of two weeks notification is required to schedule on-site services***
5. ***Freight charges will be applied at the time of order.***

120 J Talbert Road, Mooresville, NC 28117 (704) 662 3133 (704) 662 3155 www.amiadusa.com

Amiad USA, Inc.
120 Talbert Road, Suite J
Mooresville, NC 28117
Tel: 704.662.3133
Fax: 704.662.3155
Toll Free: 800.243.4583
E-mail: infousa@amiad.com
Web: www.amiadusa.com

Proposal Package – Clarifications

This proposal is based only on the information received in section(s): 11320, 01300, 01821, 01640, 01750, 01660, 01650, 01800, 16225, 11295, Addendum 1, and Drawings M-1.21 to M-1.25. Amiad shall not be responsible for the requirements and the specifications stated elsewhere.

Section 11320-Self-cleaning Strainers:

1.4 B. 1.c.: Hydrostatic and clean screen pressure drop tests shall be done per the specification requirements and be signed by our factory engineers in Israel that are NOT certified in USA.

2.2 A. 1.: In order to meet specification requirements, Amiad scope of supply contains 3 separate controllers and there (3) backwash assist pumps. However, Amiad strongly recommends using a single filter controller and single backwash assist pump where all three (3) filters operating online handle the entire flow and if one filter goes fault, then remaining two (2) filters handle the total flow until the fault filter is rectified. This is the best industrial practice to operate multiple filters installed on a common inlet and outlet manifolds to ensure equal wear and tear among the filters and enhance the longevity of the system. This method assures the proper self-cleaning process for every filter in the system and ensures smooth operation of the entire system.

2.3 B. 2.: Strainer units shall have an electrically actuated full port ball backwash valve in lieu of a hydraulic valve. This electric valve ensures proper operation of the filter backwash cycle due to low pressure available.

2.3 B. 3 & 4.: Please clarify how does Amiad local controller know if the system is met the minimum pressure requirement for the backwash so that it can use pipeline pressure for backwash or utilize the backwash assist pumps. Amiad assumes customer's SCADA system will generate two separate dry contact inputs based on the pressure available so that Amiad controller can choose relevant backwash method. However, if the operating pressure is less than 18 psig during normal system operation, Amiad strongly recommends utilizing only the backwash assist pump for filter system backwash to maintain the simplicity of the filter design and prevent unnecessary obstacle in the backwash line due to the backwash assist pump that is not been in use during filter system backwash when using the pipeline pressure and water.

2.3 C. 1. b.: Motor speed shall be 1,770 rpm rather than 3,450 rpm.

2.3. E. 1.: Anchor bolts to be provided by others.

2.3 G. & H.: Control panel shall be one of Amiad's custom controller designs that may not be satisfied the referenced project specifications in these sections. All instruments and control components shall be our standard.

2.4. A.: Filter internal and external coating shall be per Amiad's standard. More information about Amiad's standard painting shall be provided at the submittal stage.

Section 01300:

1.4 . A. & 1.8 A.: All submittal shall be in electronic format and hard copies and binders to be prepared and provided by others.

Section 01640:

2.1. B. 4.: Anchor bolts to be provided by others.

Section 01800:

1.4 C.: The proposed equipment contains Amiad's standard actuators.

1.4 D.: The system has been designed with separate controller and a backwash assist pump for each filter. It is highly recommended to operate the system with single controller in order to prevent complexity of the design.

Filter isolation valves are not included in Amiad proposal and to be provided by others.

Section 16225:

Exception is taken to the bearing RTD. This is not possible for motor this small.

Section 11295: Hydraulic Valves

Exception is taken to this section in its entirety. Our proposal does not include any hydraulic valve. The filter backwash valve shall be electrically actuated valve.

Amiad USA, Inc.
120 Talbert Road, Suite J
Mooresville, NC 28117
Tel: 704.662.3133
Fax: 704.662.3155
Toll Free: 800.243.4583
E-mail: infousa@amiad.com
Web: www.amiadusa.com

Division 16 & 17:

Exception is taken to this section in its entirety as Amiad has limitations regarding SCADA integration. Our proposal includes custom controller design with MicroLogix 1400 PLC and PanelView 800 color touch HMI. These controllers will use a remote input generated by customer's SCADA system (based on the pressure available in the system) to initiate backwash cycle. If this is not acceptable or non-negotiable, Amiad shall examine our possibility of meeting the requirements in division 16 by subcontracting the controller to a 3rd party vendor that can design the controller according to the specification requirements and this proposal shall be revised to reflect any additional cost associated with this task.

Drawing Sheet M-1.21, M-1.22, M-1.23, M-1.24:

The filter backwash line shall be on the top of the filter rather than on the bottom shown in these drawings.

Proposal Package - Technical Specifications

Proposal Number: IE-ABF10KILX-121521-R2

General Requirements

Minimum flow for flush cycle:	310 GPM
Minimum pressure for flush cycle:	**30 PSI (to be provided by the backwash assisted pump in the scope)**
Maximum operating pressure:	150 PSI
Maximum operating temperature:	140 °F
Maximum allowed TSS:	<15 ppm
Screen type:	Perforated
Filtration Area:	1,550 in²/Per filter
Inlet/Outlet diameter:	16"
Filter housing diameter:	24" (On-line HF and In-line)
Dry weight*:	~1,466 lb (In-line) / ~1,259 (On-line)-Per filter
Shipping weight*:	TBD

* Dry/wet weight includes only the filter and screen.

Flushing Data

Exhaust valve:	3"
Flush cycle time:	15 seconds
Flush water per cycle:	~78 gallons (based on 15 seconds backwash cycle duration)
Minimum flow for flush cycle:	**310 GPM**
Minimum pressure for flush cycle:	30 PSI

Control & Electrical

Rated operational voltage:	480V AC, 3-Ph, 60 Hz
Electric motor:	1.0 HP
Current consumption:	TBD
Control voltage:	120 V AC

Construction Materials

Filter Housing and lid:	Epoxy coated carbon steel 37-2
Screen Element:	Perforated - 316L stainless steel
Cleaning Mechanism:	316L stainless steel, Polyacetal
Exhaust Valve:	Ductile iron
Seals:	Synthetic rubber
Control Panel Enclosure:	NEMA 4X/Polycarbonate

120 J Talbert Road, Mooresville, NC 28117 (704) 662 3133 (704) 662 3155 www.amiadusa.com

Proposal Package - Filter Dimensional Drawing/In-line

Proposal Number: IE-ABF10KILX-121521-R2

This Page Left Blank Intentionally

120 J Talbert Road, Mooresville, NC 28117 (704) 662 3133 (704) 662 3155 www.amiadusa.com

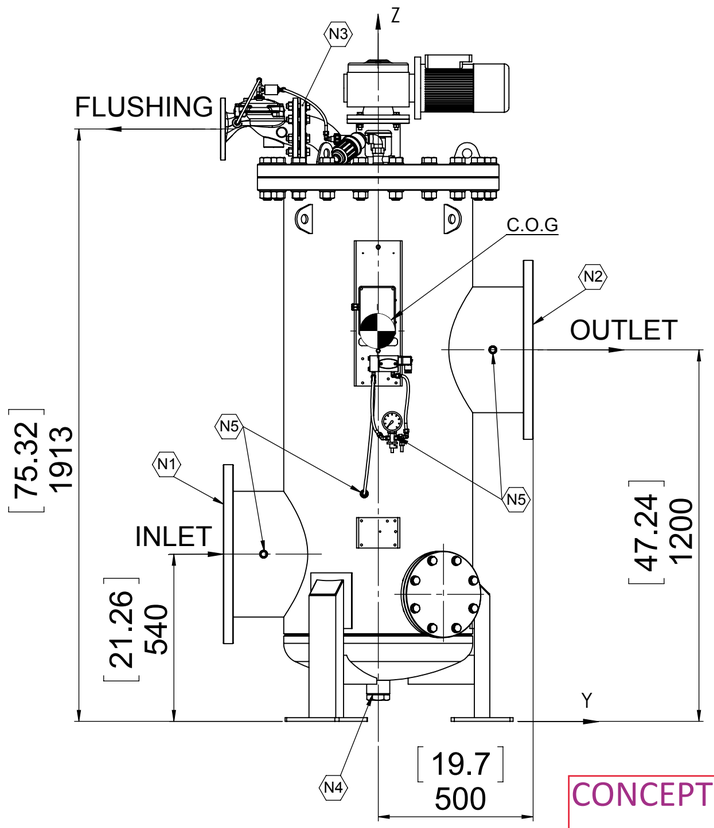

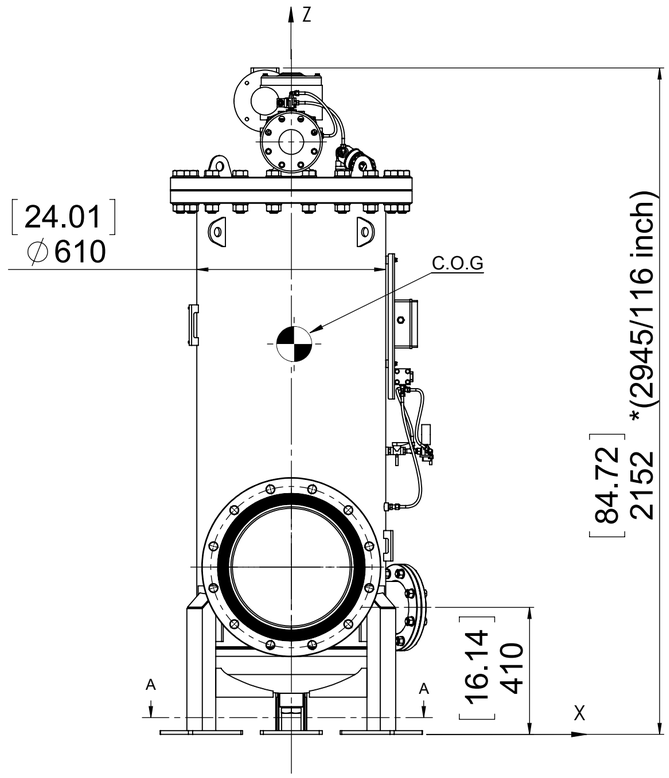

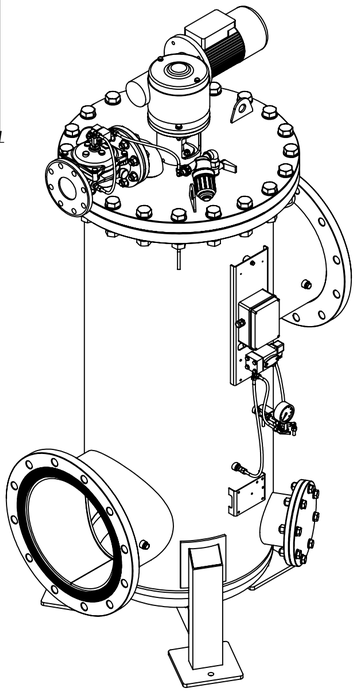

CONCEPTUAL PURPOSE ONLY

This drawing shows In-line filters that compatible with the item#1 of the Amiad's scope of supply.

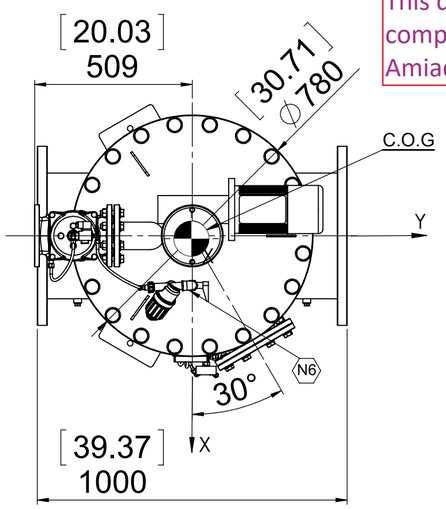

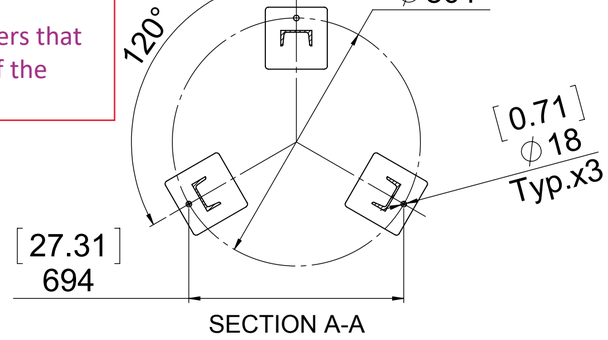

SECTION A-A

CONSTRUCTION			
Materials For Filter Vessel			
Housing / Lid: C/ST			
Flanges: See Class			
DESIGN CRITERIA			
Design Code			
Design Pressure	10 Bar [psi]		
Test Pressure	10Bar [psi]		
Design Temperature	60 °C [° F]		
Volume	485L [128 GALLON]		
TOTAL WEIGHT			
	KG	LB	
Empty	665	1466	
Operating	1150	2535	
Lid (without accessories)	162	357	
CENTER OF GRAVITY mm [Inch]			
	X	Y	Z
Empty	9.2 [0.36]	-2.5 [-0.098]	1260 [49.6]
Operating	5.4 [0.21]	-1.5 [-0.06]	1139 [44.85]

LINEAR GENERAL TOLERANCES (mm)						
DIMENSIONS	0.5-3	>3-50	>50-120	>120-400	>400-1000	>1000
TOLERANCE	±0.5	±1	±1.5	±2.5	±4	±6

* Approx. Height Required for Maintenance
Dimensions are in mm [Inch]

NOZZLES LIST						
CODE	QTY.	DN	CLASS	PIPE	FLANGE TYPE	SERVICE
N1	1	16"	BY DEMAND	VARY	S.O.R.F	INLET
N2	1	16"	BY DEMAND		S.O.R.F	OUTLET
N3	1	3"	BY DEMAND		S.O.R.F	FLUSHING
N4	1	2"	BSP		COUPLING	DRAINAGE
N5	4	1/4"	BSP		COUPLING	INSTRUMENTANTION
N6	1	3/4"	BSP		COUPLING	INSTRUMENTANTION

A	07/01/18	FIRST ISSUE	N.Z	I.Z	I.Z
	Date	Reason for Issue	By	Chk	Apr

REVISION

amiad® WATER SYSTEMS — ARKAL FILTOMAT AMIAD

PROJECT :
16" ABF-10K I/L HF

TITLE :
16" ABF-10K I/L HF

Cat. No.:	SCALE (A2): 1:14	REV.: A
Drw. No.: KEP8.H160F.002	SHEET NO.1 OF 1	

Confidential property information.
Amiad Water Systems Ltd. Reserves the rights to make changes.
All copy rights reserved to Amiad Water Systems Ltd.

File Path: Q:\K-Kit Assy\KE\KEP8\Q:\K-Kit Assy\KE\KEP8\

File Name: KEP8.H160F.002

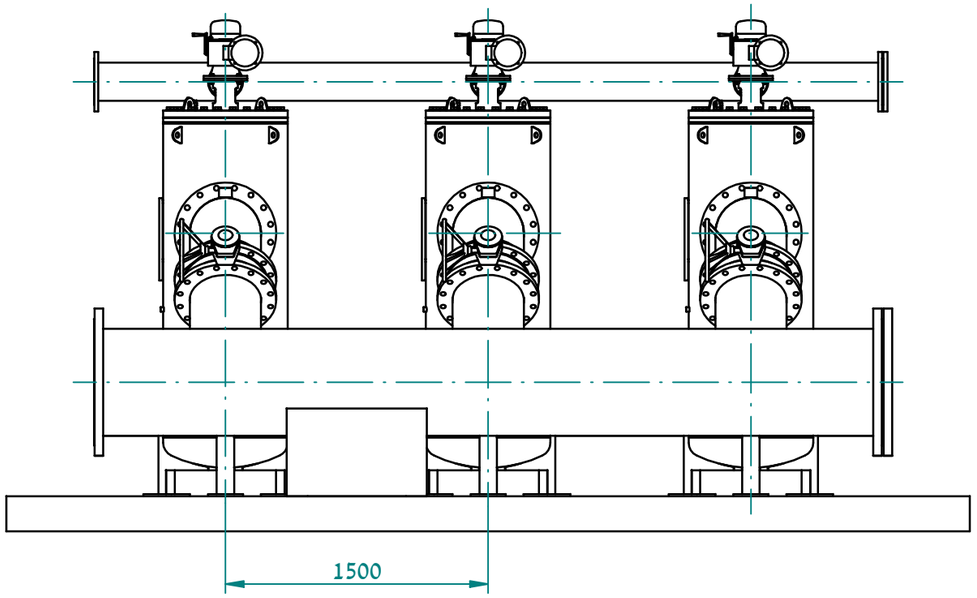

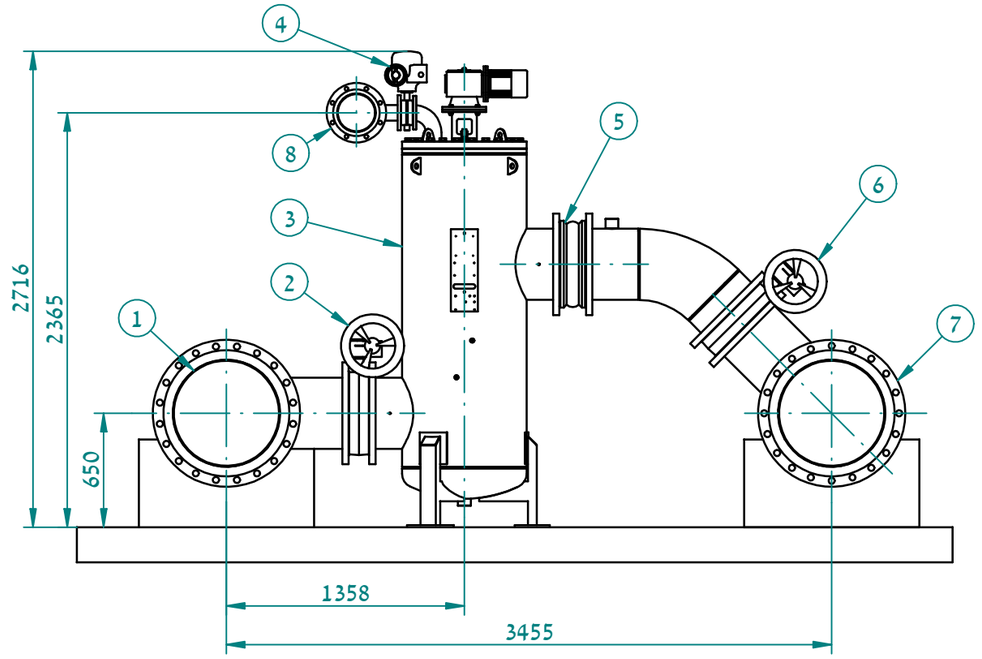

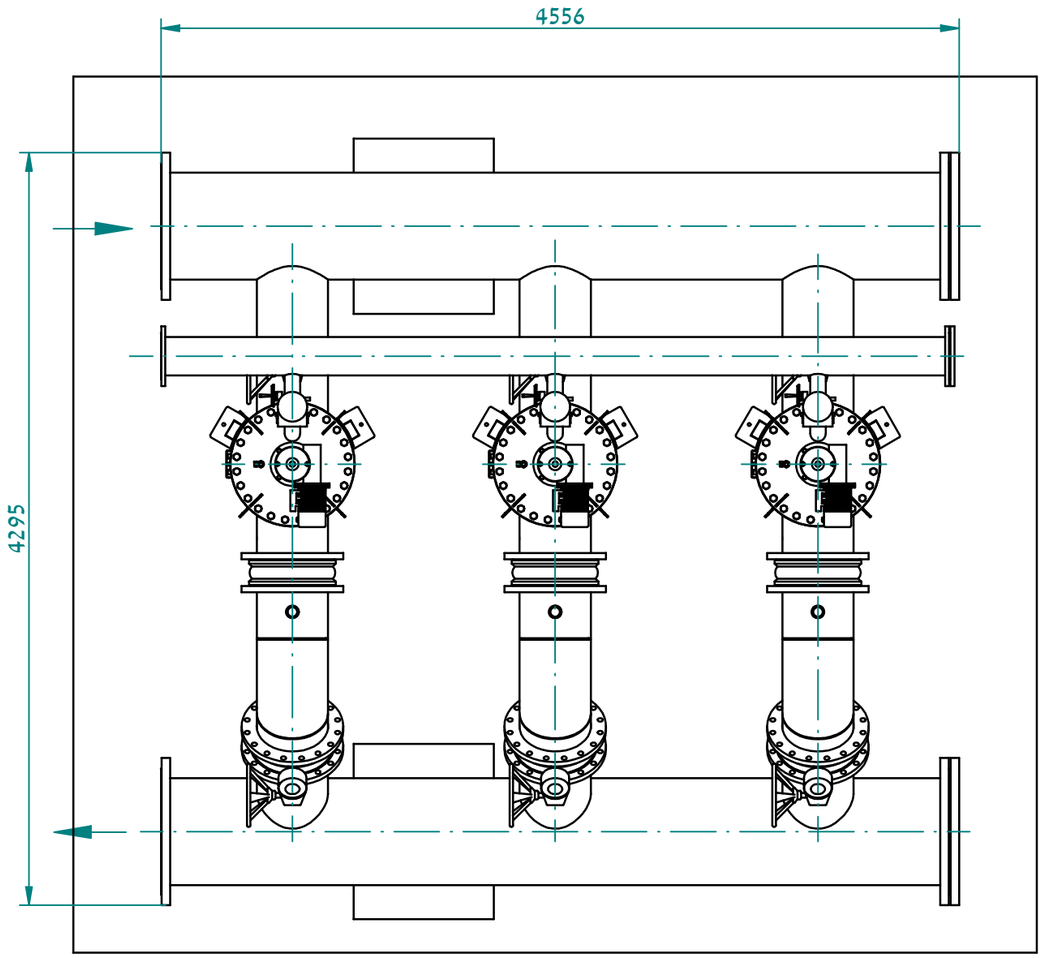

KEY

1. 24" INLET MANIFOLD (By others)
2. 16" INLET BUTTERFLY VALVE (By others)
3. 16" ABF10000 FILTER
4. 3" ELECTRIC ACTUATED VAL(included in Amiad's scope of supply)
5. 16" NON RETURN VALVE (By others)
6. 16" OUTLET BUTTERFLY VAL(By others)
7. 24" OUTLET MANIFOLD (By others)
8. 6" FLUSHING MANIFOLD (By others)

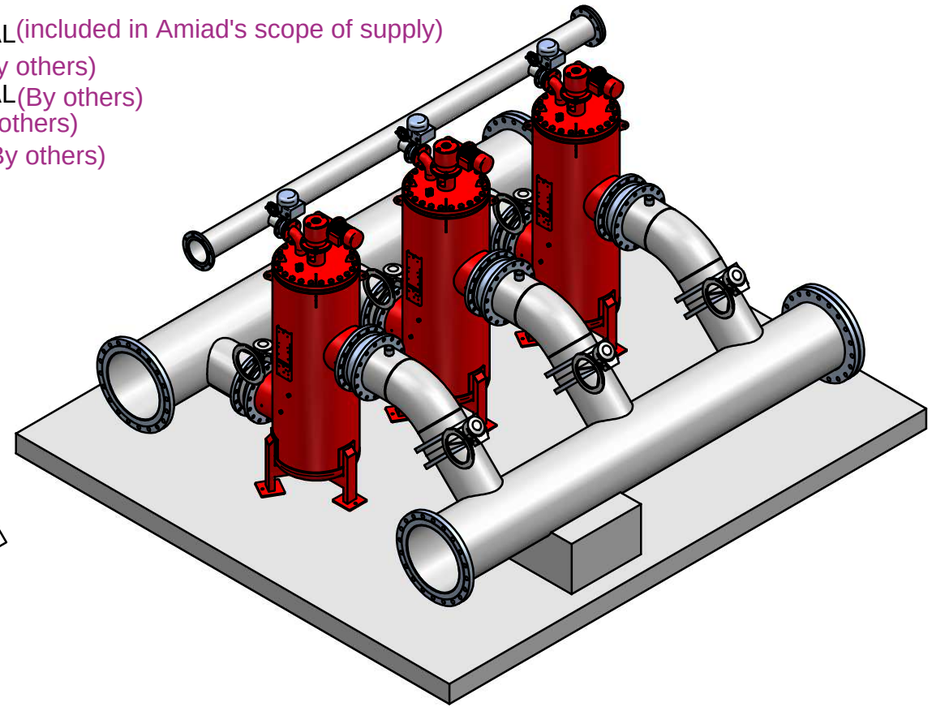

FOR INFORMATION ONLY

REV	NAME	DATE	DESCRIPTION LAST REVISIONS

SUBJECT : 3x16" ABF-10000 IN-LINE FILTER ON 24" MANIFOLD

DRAWN	janna	01/10/2009	PART NAME:
APPROVED			

MATERIAL :

Confidential propriety information.
Amiad Filtaration Systems Ltd. reserves the right to make changes.
All copy rights reserved to Amiad Filtaration Systems Ltd

AMIAD FILTRATION SYSTEMS LTD.

DRW. NO. q000128-1 REV

SCALE: 1:35 | SIZE - A3H | SHEET- 1 OF- 1

Proposal Package - Filter Dimensional Drawing/On-line

Proposal Number: IE-ABF10KILX-121521-R2

This Page Left Blank Intentionally

120 J Talbert Road, Mooresville, NC 28117 (704) 662 3133 (704) 662 3155 www.amiadusa.com

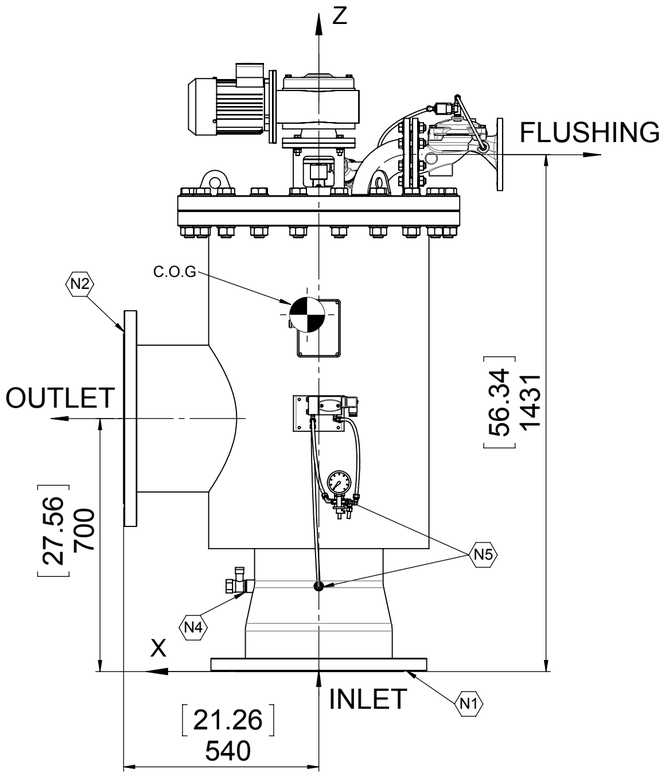

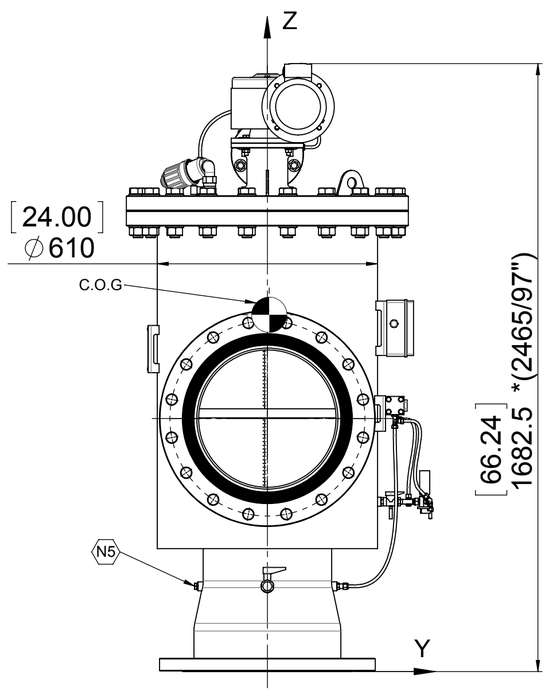

CONCEPTUAL PURPOSE ONLY

This drawing shows 16" ABF-10000 HF On-line model (item# 8 of Amiad's proposal. The inlet and outlet flanges are 90 degrees to each other rather than 180 degrees that the In-line model has (item #1 of the Amiad's proposal. Engineers to determine the suitability of this model for this job to save capital cost on the filtration system.

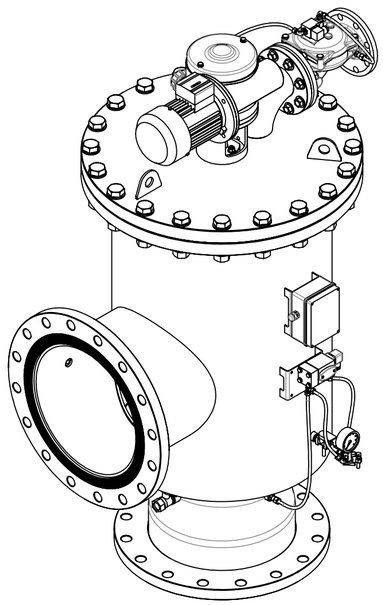

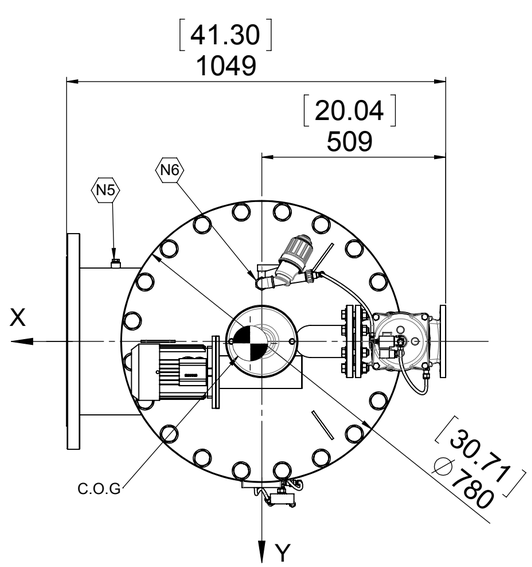

CONSTRUCTION			
Materials For Filter Vessel			
Housing / Lid: C/ST			
Flanges: See Class			
DESIGN CRITERIA			
Design Code			
Design Pressure	10 Bar [psi]		
Test Pressure	10Bar [psi]		
Design Temperature	60 °C [° F]		
Volume	300 L [79.3 gallon]		
TOTAL WEIGHT			
		KG	LB
Empty		571	1259
Operating		871	1920
Lid (without accessories)		162	357
CENTER OF GRAVITY mm [Inch]			
	X	Y	Z
Empty	34 [1.33]	5.4 [0.21]	981 [38.6]
Operating	36 [1.4]	3.5 [0.14]	893 [35.15]

LINEAR GENERAL TOLERANCES (mm)						
DIMENSIONS	0.5-3	>3-50	>50-120	>120-400	>400-1000	>1000
TOLERANCE	±0.5	±1	±1.5	±2.5	±4	±6

* Approx. Height Required for Maintenance
Dimensions are in mm [Inch]

NOZZLES LIST						
CODE	QTY.	DN	CLASS	PIPE	FLANGE TYPE	SERVICE
N1	1	16"	BY DEMAND	VARY	S.O.R.F	INLET
N2	1	16"	BY DEMAND		S.O.R.F	OUTLET
N3	1	3"	BY DEMAND		S.O.R.F	FLUSHING
N4	1	3/4"	BSP		COUPLING	DRAINAGE
N5	4	1/4"	BSP		COUPLING	INSTRUMENTANTION
N6	1	3/4"	BSP		COUPLING	INSTRUMENTANTION

A	07/01/18	FIRST ISSUE	N.Z	I.Z	I.Z
	Date	Reason for Issue	By	Chk	Apr

REVISION

amiad WATER SYSTEMS — ARKAL FILTOMAT AMIAD

PROJECT :
16" ABF-10K O/L HF

TITLE :
16" ABF-10K O/L HF

Cat. No.:	SCALE (A2): 1:12	REV.: A
Drw. No.: KEP8.H160F.001	SHEET NO.1 OF 1	

Confidential property information.
Amiad Water Systems Ltd. Reserves the rights to make changes.
All copy rights reserved to Amiad Water Systems Ltd.

File Path: Q:\K-Kit Assy\KE\KEP8\Q:\K-Kit Assy\KE\KEP8\

File Name: KEP8.H160F.001

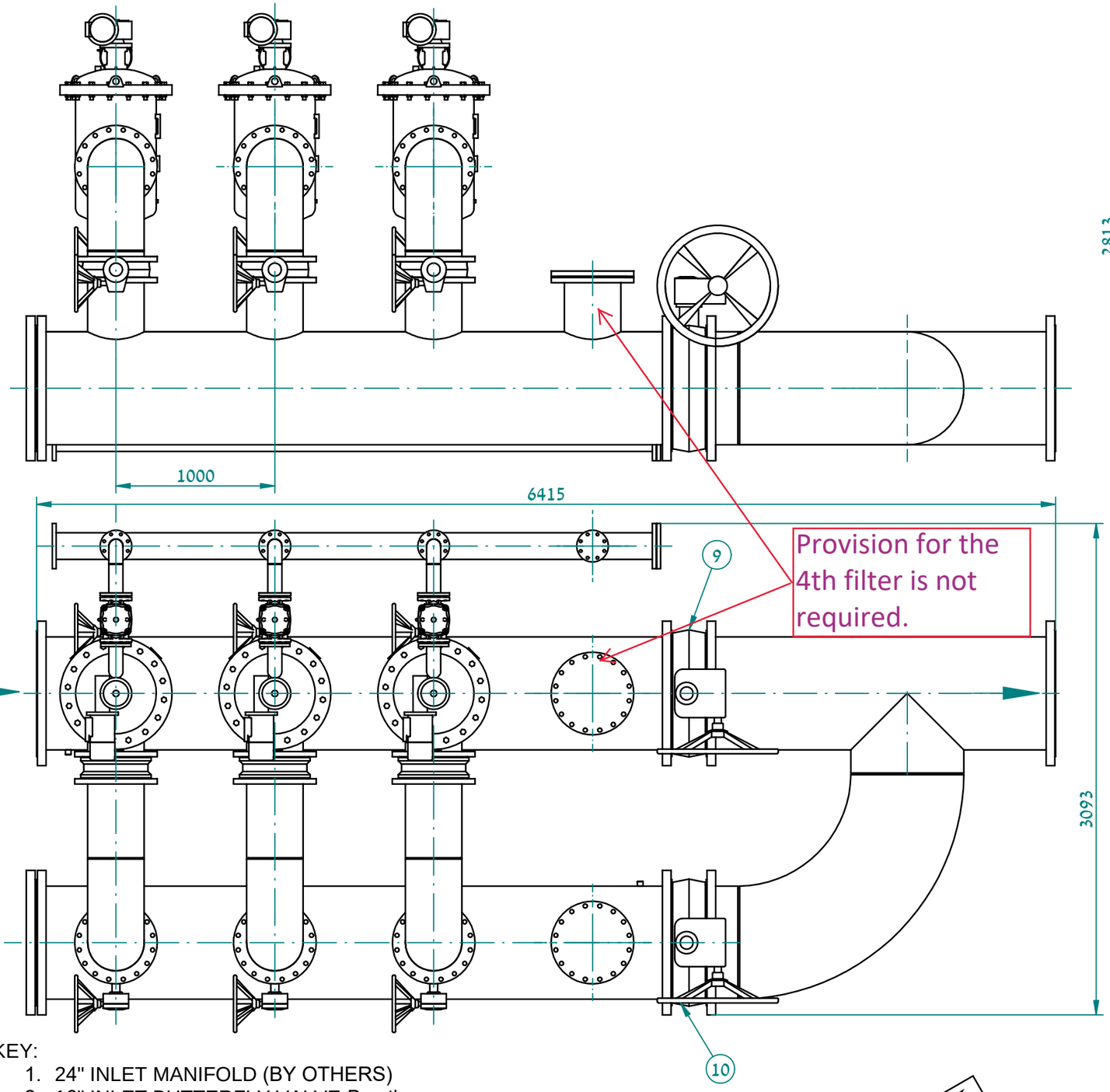

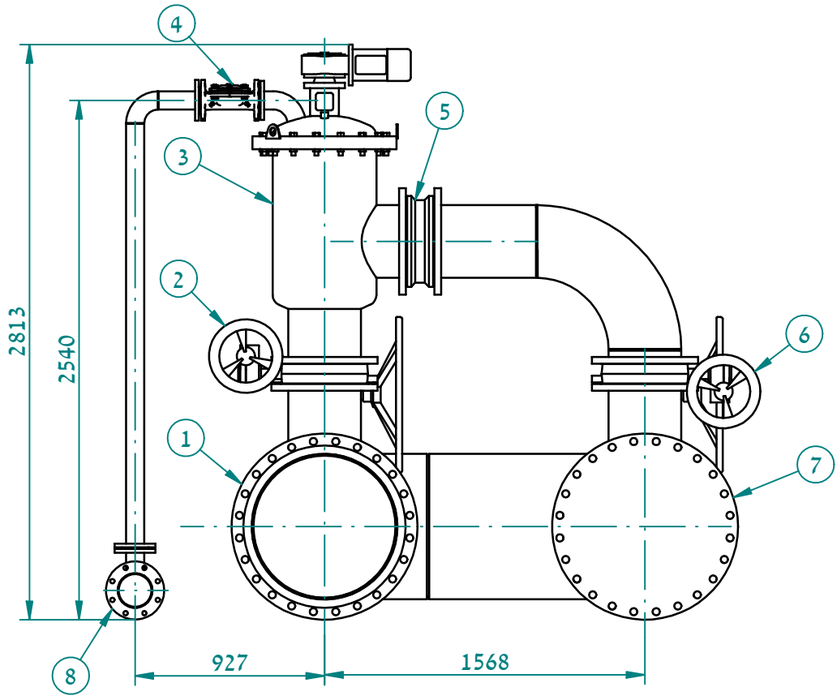

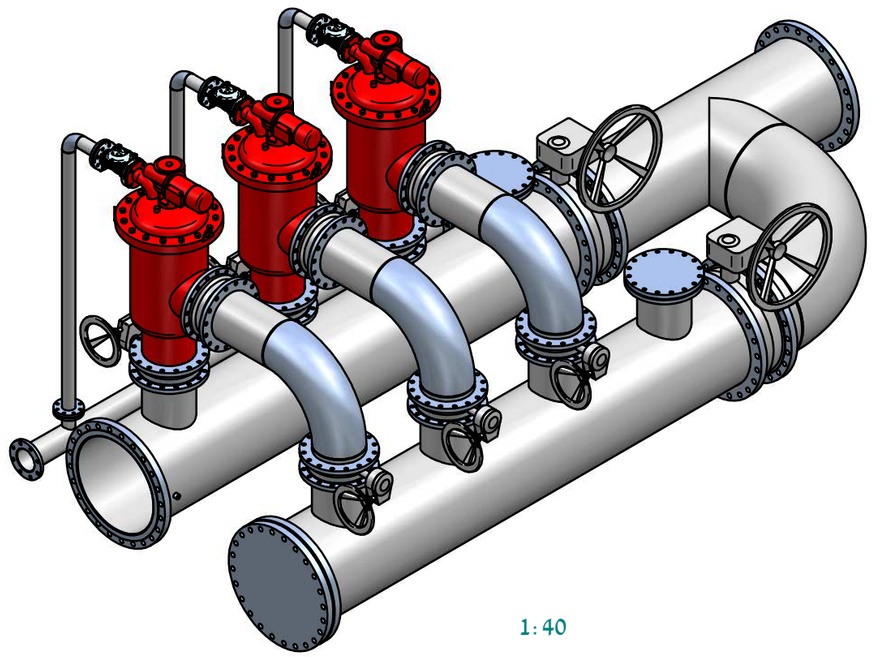

1:40

KEY:

1. 24" INLET MANIFOLD (BY OTHERS)
2. 16" INLET BUTTERFLY VALVE-By others
3. 16" ABF-10000 FILTER
4. 3" FLUSHING VALVE
5. 16" NON RETURN VALVE (By others)
6. 16" OUTLET BUTTERFLY VALVE (others)
7. 24" OUTLET MANIFOLD (By others)
8. 6" FLUSHING MANIFOLD (By others)
9. 24" BY-PASS BUTTERFLY VALVE (By others if required)

FOR INFORMATION ONLY

REV	NAME	DATE	DESCRIPTION LAST REVISIONS

SUBJECT : 3x14" ABF-10000 FILTER ON 24" MANIFOLD

DRAWN	Janna	14/07/2011	PART NAME:
APPROVED			

MATERIAL :

Confidential propriety information.
Amiad Filtaration Systems Ltd. reserves the right to make changes.
All copy rights reserved to Amiad Filtaration Systems Ltd

AMIAD FILTRATION SYSTEMS LTD.

DRW. NO. QS-000196-1 REV

SCALE: 1:30 | SIZE - A3H | SHEET- 1 OF- 1

Project Name: Chandler Reclaimed Water Interconnect Facility
Project No. WW1901.402

Work Category: **11F - Chemical Metering Pumps**

Date: 4/12/2022 Rev 6/1/2022

		Recommended				
COMPANY INFORMATION		**Hennesy Mechanical Sales & USGI**				
		Jeff Pals				
		(602) 996-3444				
		jeff@hennesymech.com				
TOTAL WORK CATEGORY PACKAGE VALUE		**$788,961**				
MCCARTHY SUBCONTRACT & FRONT END TERMS						
1	Compliant with McCarthy Front Ends	Yes				
2	Bid Submitted on McCarthy Bid Form	Yes				
3	Bid Bond Included with Bid (if over $500K Sub/$1M Supplier)	n/a				
4	Surety Company	n/a				
5	Surety AM Best Rating (Must be A- or Better)	n/a				
6	AM Best Financial Size X($500M to $750M) or higher	n/a				
7	Anticipated contract amount is less than the Federal UW Limit as listed on the Treasury Listing	n/a				
8	Bond/CDI Cost	1.295%				
9	Included Insurance Requirements (Per Matrix)	Yes				
10	GL Insurance Company Name	Colony Insurance Company				
11	GL Insurance Carrier AM Best Rating (Must be A- or Better)	Yes				
12	PRL Insurance (If required by the Front Ends)	n/a				
13	Pollution Insurance (If required by the Front Ends)	n/a				
14	Tier 1 Approved	Pending				
15	Tier 2 Approved	No				
16	Safety Items:	Yes				
17	OSHA Recordable Incident Rate (Current)	n/a				
18	Agrees to comply with PPE requirements including 100% glove policy	Yes				
19	Acknowledges updated ladder policy (platform ladders)	Yes				
20	Task Hazard Analysis included for all tasks	Yes				
21	Tie-off above 6' required	Yes				
22	Includes Hoisting for Sub's Own Work Scope	n/a				
23	Acknowledges Soils Report	n/a				
24	Acknowledges Addenda	Yes				
25	Hold Bid for 180 Days	No				
26	Pricing good for the duration of the project	Yes				
27	Sales Tax Included	No				
28	**Market Questions**					
29	Have you experienced and/or do you anticipate any issues with existing suppliers or vendors?	No				
30	Do you have any overseas suppliers that may be impeding your supply chain?	No				
31						
32	Per Plans & Specifications	Yes				
33	Division 1 as it relates to this scope of work	Yes				
34	01010 - Summary of Work	Yes				
35	01300 - Submittals	Yes				
36	01640 - Materials and Equipment	Yes				
37	01650 - Starting of Systems	Yes				
38	01660 - Field Tests of Equipment	Yes				
39	01730 - Operation and Maintenance Data	Yes				
40	01750 - Spare Parts and Maintenance Materials	Yes				
41	01821 Instruction of Operations and Maintenance Personnel	Yes				

Project Name: Chandler Reclaimed Water Interconnect Facility
Project No. WW1901.402

Work Category: **11F - Chemical Metering Pumps**

Date: 4/12/2022 Rev 6/1/2022

		Recommended				
	COMPANY INFORMATION	**Hennesy Mechanical Sales & USGI**				
		Jeff Pals				
		(602) 996-3444				
		jeff@hennesymech.com				
	TOTAL WORK CATEGORY PACKAGE VALUE	**$788,961**				
42	09900 - Painting	Yes				
43	11715 - Chemical Metering Pumps and Appurtenances	Yes				
44	Division 13 - Special Construction	Yes				
45	15065 - Thermoplastic Pipe and Accessories	Yes				
46	Division 16 - Electrical	Yes				
Scope of Work						
Base Bid:		$776,055				
47	Provide all labor, materials, tools, equipment and appurtenances as required to perform the Work Category 11F - Chemical Metering Pumps, in accordance with and reasonably inferable from the Contract Documents, complete and without exception unless otherwise noted below, including, but not limited to the following:	Yes				
48	Check to Spec completed and submitted to McCarthy	Yes				
49	Acceptable Manufacturers: **UGSI Chemical Feed, Inc.**, or approved equal	UGSI Chemical Feed, Inc.				
50	**TAG: PMP-SHC-110, PMP-SHC-120**	Yes				
51	12.5% Sodium Hypochlorite 1,050 GPH, 1HP motor, with local control panel	Yes				
52	**TAG: PMP-CA-210, PMP-CA-220**	Yes				
53	50% Citric Acid, 810 GPH, 1HP motor, with local control panel	Yes				
54	**TAG: PMP-SA-310**	Yes				
55	50% Sulfuric Acid, 90 GPH, 1HP motor, with local control panel	Yes				
56	**TAG: PMP-SB-410**	Yes				
57	38% Sodium Bisulfite, 270 GPH, 1HP motor, with local control panel	Yes				
58	**TAG: PMP-SH-510**	Yes				
59	25% Sodium Hydroxide, 720 GPH, 1HP motor, with local control panel	Yes				
60	**TAG: PMP-ACH-610, PMP-ACH-620**	Yes				
61	40% ACH, 5.0 GPH, 0.5HP motor, with local control panel	Yes				
62	**TAG: PMP-BSHC-810, PMP-BSHC-820**	Yes				
63	12.5% Sodium Hypochlorite, 14 GPH, 0.5HP motor, with local control panel	Yes				
64	Pump Construction:	Yes				
65	steel and nodular iron, non-loss-motion stroke adjust mechanism	Yes				
66	direct coupled variable speed DC motor	Yes				
67	flat, Teflon faced composite diaphragm	Yes				
68	Liquid Ends shall provide for easy maintenance and integral sight flow indication via clear CPVC cartridge-type check valves.	No				
69	Drive:	Yes				
70	steel and nodular iron, non-loss-motion stroke adjust mechanism housed in corrosion resistance, epoxy painted, cast iron gearbox	Yes				
71	Drive Bearings: tapered rollers	Yes				
72	all fasteners shall be oil-bath lubricated	Yes				
73	Stroke length: manual controlled 10-turn micrometer-type adjuster. Percent scale and vernier shall indicate stroke length in 0.25% increments. Each revolution of the know shall indicate stroke length by 10%.	Yes				
74	Liquid Ends:	Yes				
75	process diaphragm shall be Hypalon, incorporate convolutions, an O-Ring groove in head's diaphragm cavity	No				

Project Name: Chandler Reclaimed Water Interconnect Facility
Project No. WW1901.402

Work Category: **11F - Chemical Metering Pumps**

Date: 4/12/2022 Rev 6/1/2022

Recommended

COMPANY INFORMATION		**Hennesy Mechanical Sales & USGI**				
		Jeff Pals				
		(602) 996-3444				
		jeff@hennesymech.com				
TOTAL WORK CATEGORY PACKAGE VALUE		**$788,961**				
76	secondary diaphragm shall be completely sealed to separate pump head from drive unit	Yes				
77	Pulsation Dampeners:	Yes				
78	Wetted Parts: PVC	Yes				
79	Hardware: Stainless Steel	Yes				
80	Air Fittings: Brass	Yes				
81	equipped with charging valve and 0-160 psig gas pad, pressure gauge and integral piping fittings	Yes				
82	Nitrogen gas bottles and cart for use in charging pulsation dampeners	Yes				
83	Diaphragm: Hypalon	Yes				
84	Acceptable Manufacturers: **Primary Fluid Systems, Inc.**, or approved equal	Yes				
85	Degassing Valve:	Yes				
86	Valve Body: CPVC	Yes				
87	Seal: Viton	Yes				
88	Top and Bottom Connection: 1/2" NPT	Yes				
89	Acceptable Manufacturers: **Primary Fluid Systems, Inc.**, or approved equal	Yes				
90	Pressure Relief Valves:	Yes				
91	Valve Body: Type IV, Grade 1, CPVC	Yes				
92	Seals: Teflon	Yes				
93	Diaphragm: Teflon, suitable for the specified chemical concentrations	Yes				
94	Factory set and field adjustable without disconnecting from the line	Yes				
95	Capacity: equal to or greater than pumping head capacity at set pressure	Yes				
96	Set Pressure: 50 PSI	Yes				
97	Acceptable Manufacturers: **Primary Fluid Systems, Inc.**, or approved equal	Yes				
98	Pressure Gauges:	Yes				
99	normal operating pressure falls between 50% and 80% of full scale, 4 1/2" face diameter, 270 degree movement, 1% accuracy, full-scale, suitable for bottom stem mounting.	Yes				
100	316 SST bourdon tube, 300 Series SST case, Type 315 SST socket, shatterproof glass, 1/4" bottom connection. (Ashcroft General Service Gauge, Type 1009, or approved equal)	Yes				
101	Premium grade, diaphragm seals with 1/2" process connection, titanium housing and titanium diaphragm, silicone fill (Ashcroft Type 101, or approved equal)	Yes				
102	Control Panel:	Yes				
103	NEMA 4X Stainless Steel enclosure, with air conditioning,	Yes				
104	Warranty: 1 year from substantial completion	Yes				
105	Provide structural and anchorage calculation	$1,500				
106	Provide all anchors and epoxy required for the installation of the equipment	$1,320				
107	All metallic surfaces (including pipe, supports, and enclosure) shall be primed per the requirements of the 09900 - Painting	Yes				
108	Shipping shall be FOB jobsite	Yes				
109	Unloading & storage	n/a				
110	Temporary protection & enclosure	n/a				
111	Preventative maintenance	n/a				
112	O&M's per specification section 01781	Yes				
113	Training: minimum 1 trip - 1 person day	Yes				
114	Spare Parts per the Specifications	Yes				

Project Name: Chandler Reclaimed Water Interconnect Facility
Project No. WW1901.402

Work Category: **11F - Chemical Metering Pumps**

Date: 4/12/2022 Rev 6/1/2022

		Recommended				
COMPANY INFORMATION		**Hennesy Mechanical Sales & USGI**				
		Jeff Pals				
		(602) 996-3444				
		jeff@hennesymech.com				
TOTAL WORK CATEGORY PACKAGE VALUE		**$788,961**				
115	***Escalation Moved F2 Esclation Allowance (Not Calculated in Total WC)***	$77,606				
116	COVID-19 Scope Items					
117	Proposal includes CDC, Federal, State and Local OSHA guidelines for COVID-19.	Yes				
118	Your proposal shall include all productivity, schedule, and other impacts to cost and schedule.	Yes				
119	All personnel onsite must maintain 6'0" spacing between personnel and shall have facemasks on at all times that align with CDC, Federal, State or Local OSHA guidelines for COVID-19.	Yes				
120	Any personnel reporting symptoms must be immediately reported to McCarthy and follow the appropriate testing and quarantine protocols.	Yes				
121						
122	End of Scope					
	Bond/CDI Cost	$10,086				
	TOTAL WORK CATEGORY PACKAGE VALUE	**$788,961**				

Project Name: Chandler Reclaimed Water Interconnect Facility
Project No. WW1901.402

Work Category: **11G - Weight Scales**

Date: 4/12/2022 Rev 6/1/2022

		Recommended				
COMPANY INFORMATION		**Mettler-Toledo**				
		Jim Heaphy				
		(248) 296-3218				
		jim.heaphy@mt.com				
TOTAL WORK CATEGORY PACKAGE VALUE		**$89,795**				
MCCARTHY SUBCONTRACT & FRONT END TERMS						
1	Compliant with McCarthy Front Ends	No				
2	Bid Submitted on McCarthy Bid Form	No				
3	Bid Bond Included with Bid (if over $250k Sub/$500k Supplier)	n/a				
4	Surety Company	n/a				
5	Surety AM Best Rating (Must be A- or Better)	n/a				
6	AM Best Financial Size X($500M to $750M) or higher	n/a				
7	Anticipated contract amount is less than the Federal UW Limit as listed on the Treasury Listing	n/a				
8	Bond/CDI Cost	1.295%				
9	Included Insurance Requirements (Per Matrix)	$1M / CGL				
10	GL Insurance Company Name	n/a				
11	GL Insurance Carrier AM Best Rating (Must be A- or Better)	n/a				
12	PRL Insurance (If required by the Front Ends)	n/a				
13	Pollution Insurance (If required by the Front Ends)	n/a				
14	Tier 1 Approved	No				
15	Tier 2 Approved	No				
16	Safety Items:	Yes				
17	OSHA Recordable Incident Rate (Current)	n/a				
18	Agrees to comply with PPE requirements including 100% glove policy	Yes				
19	Acknowledges updated ladder policy (platform ladders)	Yes				
20	Task Hazard Analysis included for all tasks	Yes				
21	Tie-off above 6' required	Yes				
22	Includes Hoisting for Sub's Own Work Scope	n/a				
23	Acknowledges Soils Report	n/a				
24	Acknowledges Addenda	Yes				
25	Hold Bid for 180 Days	No				
26	Pricing good for the duration of the project	Yes				
27	Sales Tax Included	No				
28	**Market Questions**					
29	Have you experienced and/or do you anticipate any issues with existing suppliers or vendors?	No				
30	Do you have any overseas suppliers that may be impeding your supply chain?	No				
31						
32	Per Plans & Specifications	Yes				
33	Division 1 as it relates to this scope of work	Yes				
34	01010 - Summary of Work	Yes				
35	01300 - Submittals	Yes				
36	01640 - Materials and Equipment	Yes				
37	01650 - Starting of Systems	Yes				
38	01660 - Field Tests of Equipment	Yes				
39	01730 - Operation and Maintenance Data	Yes				
40	01750 - Spare Parts and Maintenance Materials	Yes				
41	01821 Instruction of Operations and Maintenance Personnel	Yes				
42	13466 - Floor Scale and Instruments	Yes				
Scope of Work						

Project Name: Chandler Reclaimed Water Interconnect Facility
Project No. WW1901.402

Work Category: **11G - Weight Scales**

Date: 4/12/2022 Rev 6/1/2022

		Recommended				
COMPANY INFORMATION		**Mettler-Toledo**				
		Jim Heaphy				
		(248) 296-3218				
		jim.heaphy@mt.com				
TOTAL WORK CATEGORY PACKAGE VALUE		**$89,795**				
Base Bid:		$83,647				
43	Provide all labor, materials, tools, equipment and appurtenances as required to perform the Work Category 11G - Weight Scales, in accordance with and reasonably inferable from the Contract Documents, complete and without exception unless otherwise noted below, including, but not limited to the following:	Yes				
44	Check to Spec completed and submitted to McCarthy	No				
45	Acceptable Manufacturers: **Mettler-Toledo**, or approved equal	Mettler-Toledo				
46	**TAG: SCL-CA-200, SCL-SA-300, SCL-SBS-400, SCL-SH-500, SCL-ACH-600**	Yes				
47	General Provisions:	Yes				
48	Overall Platform Size: 59" x 59" and not more than 9" tall	Yes				
49	Gross Weighing Capacity: 5,000 pounds	Yes				
50	constructed for use in a washdown environment and components suited for that environment	Yes				
51	Platform: Type 316 SST with Tuffcoat system	Yes				
52	Load Cells:	Yes				
53	temperature stable, rolling diaphragm type, allows 4-degree tilt of load plate without affecting scale accuracy	Yes				
54	Rated Capacity: 5,000 pounds	Yes				
55	Temperature compensation: -10 to +40 degrees Celsius	Yes				
56	Maximum loads:	Yes				
57	Safe: 150% of rated capacity	Yes				
58	Ultimate Overload: 300% of rated capacity	Yes				
59	Safe Side: 100% of rated capacity	Yes				
60	constructed of 17-4ph stainless steel with welded hermetic gauge cover over gauge and wiring cavities	Yes				
61	each load cell to have integral conduit fitting on cable entrance	Yes				
62	data plate: mfg., capacity, part number, serial number, NTEP number, class number, Nmax, load cell Vmin	Yes				
63	Floor Scale Platform:	Yes				
64	unobstructed weighing surface	Yes				
65	lifting provisions: min of 2 threaded through holes with threaded plugs	Yes				
66	removable access plate to access load cell summing junction box	Yes				
67	Scale suspension shall be rocker foot style design	Yes				
68	Load foot assembly: SST and threaded	Yes				
69	Level bubble provided and visible from top of floor	Yes				
70	Junction Box:	Yes				
71	mounted internally within floor scale platform	Yes				
72	NEMA 4X 316 SST enclosure	Yes				
73	include wash down duty connectors, 1 for each load cell cable, and 1 additional connector for instrument cable.	Yes				
74	contains printed circuit board for individual load cell wiring termination, summing of output signals from each load, potentiometers for trimming/balancing the load cell signals, and wiring interface to the digital instrument.	Yes				
75	circuit board to have individual connectors for each of the load cells, and the instrument interface	Yes				
76	Digital Display Console:	Yes				

Project Name: Chandler Reclaimed Water Interconnect Facility
Project No. WW1901.402

Work Category: **11G - Weight Scales**

Date: 4/12/2022 Rev 6/1/2022

		Recommended				
COMPANY INFORMATION		**Mettler-Toledo**				
		Jim Heaphy				
		(248) 296-3218				
		jim.heaphy@mt.com				
TOTAL WORK CATEGORY PACKAGE VALUE		**$89,795**				
77	integral power supply for the load cells, integral 4-20 milliampere transmitter with output signal, and relay output (120V, 10 amp or better rated contact)	Yes				
78	Temperature Range: 10 to 125 degrees F	Yes				
79	Adjustable low weight alarm relay with dry contacts for remote alarm monitoring	Yes				
80	equipped with automatic tare	Yes				
81	NEMA 4X SST enclosure	Yes				
82	120V AC	Yes				
83	Weight indicating display	Yes				
84	316 SST instrument column	Yes				
85	Warranty: 2 years after substantial completion	Yes				
86	Shipping shall be FOB jobsite	$5,000				
87	Unloading & storage	n/a				
88	Temporary protection & enclosure	n/a				
89	Preventative maintenance	n/a				
90	O&M's per specification section 01781	Yes				
91	Training: minimum 1 trip - 1 person day	Yes				
92	Spare Parts per the Specifications	No				
93	Manufactures Services: minimum 1 trip - 1 person days installation inspection, final field calibration, training	Yes				
94	***Escalation Moved F2 Esclation Allowance (Not Calculated in Total WC)***	$16,729				
95	COVID-19 Scope Items					
96	Proposal includes CDC, Federal, State and Local OSHA guidelines for COVID-19.	Yes				
97	Your proposal shall include all productivity, schedule, and other impacts to cost and schedule.	Yes				
98	All personnel onsite must maintain 6'0" spacing between personnel and shall have facemasks on at all times that align with CDC, Federal, State or Local OSHA guidelines for COVID-19.	Yes				
99	Any personnel reporting symptoms must be immediately reported to McCarthy and follow the appropriate testing and quarantine protocols.	Yes				
100						
101	End of Scope					
	Bond/CDI Cost	$1,148				
	TOTAL WORK CATEGORY PACKAGE VALUE	**$89,795**				

Submittal Review Response

Project Name:	*OWRF Expansion Project*
Submittal No.:	*e13466-01-0*
Due Date:	*asap*
Date To Engineer:	*07/18/16*

Client:	City of Chandler - WW1301.402	Carollo Project No.:	9385A.30
Contractor:	Sundt/McCarthy	Spec. Section No.:	e13466
Submittal Name:	Tote Weight Scale		
Reviewed By:	*Kelly Scharber and Kirk Gardiner*		

SUBMITTAL REVIEW

Review is for general compliance with contract documents. No responsibility is assumed by Carollo for correctness of quantities, dimensions, and details. No deviation or variation is accepted unless specifically addressed in these review comments. Refer to Section 01330(01_33_00) for additional requirements. The Contractor shall assume full responsibility for coordination with all other trades and deviations from contract requirements.

☐	Reviewed: No Corrections Noted.
☒	Resubmittal Not Required: See Comments and Make Corrections Noted.
☐	Correct and Resubmit: See Comments and Make Corrections Noted.
☐	Rejected: See Comments.
☐	Receipt Acknowledged: Filed for Record.

Re□ew co□ □e□ts □re □s □o□ows□

□ectr□c□□Co□ □e□ts□Resu□□ □tt□□□ot Re□u□red

□□ De□□t□o□□C□r□c□t□o□ □□ use o□D□□t□□□stru□e□t□Mode□□□D□□□ □s rep□ce□e□t□s □c□□ow□ed□ed□

□□ De□□t□o□□C□r□c□t□o□ □□ O□M □ □□u□□sh□□□e □□c□uded per spec□□c□t□o□ □□□□□□

□ □□ e□Ste□e □ cho□□s□W□so□ □□□□□eers
D□te□□□□□□□

□stru□e□t□t□o□Co□ □e□ts□
□□ □

□ □□ e□
D□te□

Mech□□c□□Co□ □e□ts□
□□ Pro□de sc□e □u□rd□□st□□sc□e set □□c□ □ □ch □ro□ west ed□e o□the s□□□

□□□ e□□e□□□ Sch□r□er
D□te□□□□□□□□□□

S□□cere□□□

C□RO□□O □□□ □□□□RS□□□C□

Submittal Transmittal

With Deviation from Specification

OWRF Expansion
Prime Contract #: WW1301.402
3333 Old Price Road
Chandler, AZ 85248

Sundt/McCarthy, A Joint Venture
Project # 861503
Project Phone:
Project Fax:

Date: 7/15/2016 **Reference Number: 0647**

Transmitted To:
Michael Carzo
Carollo Engineers, Inc.
4600 E. Washington St. Suite 500
Phoenix, AZ 85034
Tel: 602-263-9500
Fax: 602-265-1422

Transmitted By:
Daniel Hageman
Sundt Construction, Inc. (SW)
2620 S. 55th St.
Tempe, AZ 85282
Tel: 480-293-3000
Fax: 480-293-3079

Qty	Submittal Package No:	Description:	Due Date:	Package Action:
03	e13466 - 01 - 0	Tote Weight Scale	8/5/2016	See Below

Transmitted For:	Delivered Via:	Tracking Number:
Approval	Email	

Items:	Qty:	Description:	Notes:	Item Action:
e13466 - 1000 - 0	01	Floor Scale - Installation Instructions		For Review and Approval
e13466 - 1001 - 0	01	Floor Scale - Certificates		For Review and Approval
e13466 - 1002 - 0	01	Floor Scale - Warranty		For Review and Approval

Cc:	Company Name:	Contact Name:	Copies:	Notes:

Deviations:

Deviations between this submittal package and the requirements of the contract documents are listed below:

Reference attached Deviation/Clarification sheet.

Remarks:

Signature Daniel Hageman **Signed Date**

Ocotillo WRF Expansion

SUBMITTAL DEVIATION/CLARIFICATIONS SHEET

Submittal No. 01-e13466-0 Tote Weight Scale

Specification Section 13466 – Floor Scale and Instruments

All deviations between this submittal package and the requirements of the contract documents are listed below.

1. **Reference provided deviations and clarifications from manufacturer for various items for this equipment. Advise of any issues with these.**

2. **Submittal is for the Citric Acid Weight Scale, SCL-460-230, shown on drwg 460-M-02 along with the Weight Scale Element, WE-460-230, and Weight Scale Transmitter, WIT-460-230, as shown on drwg 460-E-01.**

3. **For Clarification, optional ramp and scale guard have not been included within this scope for this particular application.**

4. **Spec 13466-1.04.C – Manufacturer's Installation Instructions are included however O&M Submittal per Spec01782 are not identified to be provided.**

5. **Training of Owner Personnel per Spec 01756 is not listed as required and therefore will NOT be provided unless directed otherwise.**

Local Office 6502 S. Adobe Drive
Chandler, AZ 85249
Phone (480) 812-1966
Toll Free (888) 685-3938
Fax (480) 732-0157
R.O.C. # 192774
Email neal.wolynia@mt.com

Mettler-Toledo LLC

Address 1900 Polaris Parkway, Columbus, OH 43240-2020 USA
Phone +1 614 438 4511
Phone +1 614 438 4511
Internet www.mt.com/na

Ju□e □□□□□□□□

Dan Hageman
□□ p□□□ee Ow□er
Su□dt □McC□rth□□□ Jo□□t □e□ture
Ocot□□o WR□ □□p□□s□□ Project
Jo□ □u□ □er □□□□□□□

- - - SUBMITTAL - - -

Submittal for Section 13466 – Floor Scale and Instruments.
Note: Mettler Toledo meets or exceeds all of the Specifications without exception.

The □o□ow□□ su□□ □tt□□co□t□□s the e□c□osed docu□e□ts□

□□Spec□□c□t□o□ Sect□o□ □our p□□es□□

□□□□oor Sc□□e Spec□□c□t□o□ P□□e□ □□co□po□e□ts □re □□□SS□

□□□□oor Sc□□e □e□er□□□□□out Dr□w□□□□□□chors □re □ot used□ Sc□□e s□ts o□ □ru□□er □oot□□

□□D□□t□□□□stru□e□t□Mode□□□D□□□ □ □our p□□e d□t□ □re□□
□ote□ The Ter□ □□□Mode□P□□ther P□us D□□t□□h□s □eco□e o□so□ete □□d □s rep□□ced □□the Mode□□□D□□□□ Th□s □s □e□to□ed □s □ □ote o□ P□□e □o□the Spec□□c□t□o□ □s □□ □□cept□o□□

□□P□□e □ro□ □□D□□□ M□□u□□show□□□ □□□□o□ Output w□r□□□ sche□e□ More det□□s w□□□e □□□□□□□e the□ the e□t□re □ □□u□□s pu□□shed □□ the O□M M□□u□s

□□P□□e □ro□ □□D□□□ M□□u□□show□□□ D□screte □O c□p□□□□t□es□

□□□st□□□t□o□ □ □□u□s □or Mode□□□□□ □□oor Sc□□e □□d □□D□□□ sc□□e ter□ □□□□

□□□T□P Cert□□c□tes □or Mode□□□□□ □□oor sc□□e □□d Mode□□□D□□□ sc□□e ter□ □□□□□

□□St□□d□rd Ter□s □□d Co□d□t□o□s□□□c□ud□□□ W□rr□□t□ h□□h□□□hted□

□□□Co□u□ □ □□d □□se Dr□w□□s □□ p□eces□□ the two dr□w□□s □re used to□ether to □or□ □co□p□ete Co□u□ □st□□d □□d □□se□

S□□cere□□□
□e□□R□Wo□□□□□
S□□es □□□□□eer

METTLER TOLEDO

SECTION 13466

FLOOR SCALE AND INSTRUMENTS

PART 1 GENERAL

1.01 SUMMARY

A. Section includes:
1. Weight instruments used to measure weight of chemical tote bins on concrete pedestal.
2. Mounting hardware for indicators and load cells.

B. National Electrical Manufacturers Association (NEMA):
1. 250 - Enclosures for Electrical Equipment (1000 V Maximum).

1.02 REFERENCES

A. National Institute of Standards and Technology (NIST):
1. Handbook 44: Specifications, Tolerances and Other Technical Requirements for Weighing and Measuring Devices.

1.03 DEFINITIONS

A. NEMA:
1. Type 4X enclosure in accordance with NEMA 250.

1.04 SUBMITTALS

A. Product data.

B. Shop drawings: Include the following:
1. Connection diagram.
2. Loop diagram.

C. Manufacturer's installation instructions: Include mounting details.

D. Certificates:
1. Certified calibration data meeting NIST Handbook 44, as applicable to commercial weighing.
2. National Type Evaluation Program Certificate of Conformance.

1.05 QUALITY ASSURANCE

A. Manufacturer qualifications: Manufacturer has minimum of 5 years of successful operation of similar scales in similar installations.

1.06 WARRANTY

A. Submit manufacturer's standard warranty modified to comply with Contract Documents.

PART 2 PRODUCTS

2.01 INTEGRATED SYSTEM OF WEIGHT SCALE, PLATFORM, AND LOAD CELL

A. Manufacturers: One of the following, or equal: Exception #1
   1. Mettler-Toledo Model 2256 VLC floor scale with ~~Panther Plus~~ Digital Indicator.
   2. ~~Force Flow Model 48-DR 50TBS floor scale with solo G2 digital indicator.~~

B. General provisions:
   1. Provide 1 electronic floor scale systems for the purpose of monitoring chemical solution consumption from a tote bin.
   2. Each scale shall have an overall platform size of 48 inches wide by 48 inches long by not more than 5 inches tall and shall have a gross weighing capacity of 5,000 pounds.
   3. The scale should be constructed for use in a washdown environment and shall have components suited for that environment.
   4. The scale platform and subframe assembly shall be constructed of Type 316 stainless steel or steel with Tuffcoat system.

C. Load cells:
   1. Load cells shall have the following individual characteristics:
      a. Temperature stable, rolling diaphragm type, allows 4-degree tilt of load plate without affecting scale accuracy.
      b. Rated capacity: 2,000 pounds.
      c. Temperature compensation: -10 to +40 degrees Celsius.
      d. Maximum loads:
         1) Safe: 150 percent of rated capacity.
         2) Ultimate overload: 300 percent of rated capacity.
         3) Safe side: 100 percent of rated capacity.
      e. Gauge cavity seal type: Welded hermetic gauge cover.
   2. Load cells to be constructed of 17-4 ph stainless steel and shall have a welded hermetic gauge cover over the gauge and wiring cavities.
   3. Each load cell to have an integral conduit fitting on the cable entrance into the load cell for enhanced moisture protection.
   4. Each load cell to have a data plate affixed to the load cell which clearly shows:
      a. Manufacturer.
      b. Capacity.
      c. Part number.
      d. Serial number.
      e. National Type Evaluation Program certificate of performance number.
      f. Class number.
      g. Maximum divisions (NMax).
      h. Load cell Vmin.

D. Floor scale platform:
   1. Scale shall have an unobstructed weighing surface, use of side rails or other similar designs is not acceptable.
   2. Each scale shall have provisions for lifting the entire floor scale for periodic inspection and maintenance.
      a. The scale manufacturer shall provide a minimum of 2 threaded through hole lifting points in the floor scale for this purpose.

b. The scale manufacturer shall also provide threaded steel plugs for each of these holes to protect the lifting points during non-use.

3. A removable access plate shall be provided in the top of the floor surface to provide access to the load cell summing junction box.
4. Scale suspension shall be of a rocker foot style design to allow ease of movement and installation.
5. Load foot assembly shall be stainless steel and be threaded to allow for adjustment to compensate for uneven floor conditions.
6. A level bubble shall be provided, visible from the top of floor.

E. Junction box:

1. Scale shall have a junction box assembly mounted internally within the floor scale platform.
   a. Access to the junction box assembly shall be accomplished via removable plate in the top of the scale platform.
   b. Remote mounted, or side access junction box assemblies are not acceptable.
2. Junction box enclosure shall be constructed of Type 316 stainless steel and shall be designed to NEMA 4X standards.
3. The junction box enclosure shall have wash down duty connectors, 1 for each load cell cable, and 1 additional connector for the instrument cable.
   a. Multiple cables using single box connectors is not acceptable.
4. The junction box shall contain a printed circuit board for the purpose of individual load cell wiring termination, summing of the output signals from each load cell, trimming/balancing the load cell signals, and wiring the interface to the digital instrument.
5. The printed circuit board shall have individual connectors for each of the load cells, and the instrument interface cable.
   a. Each wire shall have a single terminal connection. Doubling up or ganging of wires to one terminal is not acceptable.
6. The summing printed circuit board shall have potentiometers, one per load cell for the electrical trimming/balancing of the load cell signals during calibration.

F. Digital display console located near the scale with integral power supply for the load cell, integral 4 to 20 milliampere transmitter with output signal proportional to the weight, and relay output (120 V, 10 amp or better rated contact) for low level alarm that will be used as an interlock to shut down the feed equipment.

1. Temperature range: 30 to 105 degrees Fahrenheit.
2. Adjustable low weight alarm relay with dry contacts for remote alarm monitoring.
3. Equipped with automatic tare.
4. Enclosure: NEMA 4X, stainless steel.
5. Power supply: 120 volts alternating current.
6. Weight indicating display.
7. Provides Type 316 stainless steel instrument column.

PART 3 EXECUTION

3.01 INSTALLATION

A. Install in accordance with manufacturer's recommendations.

B. Provide field service by the scale manufacturer who shall perform final calibration and certify the scale to an accuracy of, or better than, that required by NIST, Handbook 44, as applicable to commercial weighing.

END OF SECTION

Exception #1: Panther replaced with upgraded Terminal Model IND570

VLC



VLC

COMMERCIAL DUTY—FLOOR SCALE

The METTLER TOLEDO model VLC floor scale is fully electronic, portable, and has a low profile…making it ideal for freight consolidators, or shipping and receiving departments. The Stainless Steel version is available in 304ss or 316ss and was designed specifically for the Food Industry where harsh wet environments are the norm. Its low-profile design minimizes operator effort when loading the scale platform. Installation is easy…whether you decide to mount it in a portable above ground configuration or install it in a preformed pit supplied from METTLER TOLEDO. The VLC floor scale can interface with all METTLER TOLEDO analog instruments and accessories.

Applications

- OEM machinery
- Shipping and receiving

Standard Features

- TYPE 4X stainless steel analog j-box
- Ball-in-Cup threaded foot suspension
- Hermetically sealed stainless steel load cells
- 25' plain end-to-end instrument cable

Options

- Ramps
- Locating plates

Specifications

Approvals:
NTEP 5000d Class III, COC # 99-111A1, AM-5160, Rev. 2

Material:
Mild steel, epoxy painted tread plate or 304 or 316 stainless steel, bead blasted, smooth plate deck finish

Platform sizes:
3' x 3' , 4 x 4', 4 x 5', 4 x 6', 5 x 5', 5 x 7'

Platform height:
4"

Available capacities:
2500 lb, 6000 lb, 10,000 lb

Standard operating temperature:
48°F to 104°F (10°C to 40°C)

Shipping weight:
250 lb – 925 lb

Compatible instruments:
ID7, ID1-A, HAWK™, PANTHER®, LYNX®, JAGXTREME® and PUMA®

Dimensions (in inches and feet)

	VLC
A	4”
B	3, 4, 5’
C	3, 4, 5, 7’

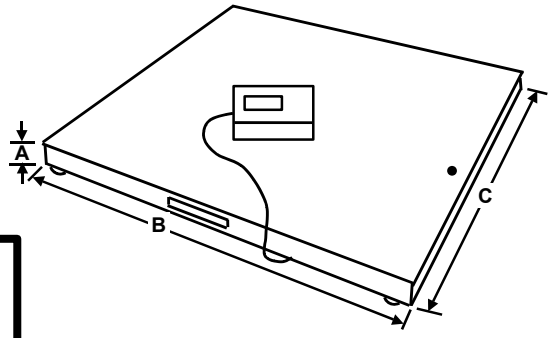

VLC with HAWK™ Instrument

Ocotillo WRF Expansion Project
Job # 861503
Section 13466 Floor Scale and Instruments
Prepared for
Su□dt□McC□rth□□□ Jo□□t □e□ture
Provided by
Mett□r To□edo □□C

Floor Scales

VLC Floor Scale—Mild Steel (epoxy painted, tread plate deck finish)

Order Number	Platform Size (ft)	Capacity (lb)	Load Cell Size (lb)	Shipping Weight (lb)
2256202012-A	3' x 3'	2500 lb	1000 lb	250 lb
2256202013-A	3' x 3'	6000 lb	2500 lb	250 lb
2256202022-A	4' x 4'	2500 lb	1000 lb	400 lb
2256202023-A	4' x 4'	6000 lb	2500 lb	400 lb
2256202024-A	4' x 4'	10,000 lb	5000 lb	475 lb
2256202032-A	4' x 5'	2500 lb	1000 lb	475 lb
2256202033-A	4' x 5'	6000 lb	2500 lb	475 lb
2256202034-A	4' x 5'	10,000 lb	5000 lb	550 lb
2256202042-A	5' x 5'	2500 lb	1000 lb	500 lb
2256202043-A	5' x 5'	6000 lb	2500 lb	500 lb
2256202044-A	5' x 5'	10,000 lb	5000 lb	625 lb
2256202052-A	4' x 6'	2500 lb	1000 lb	500 lb
2256202053-A	4' x 6'	6000 lb	2500 lb	500 lb
2256202054-A	4' x 6'	10,000 lb	5000 lb	675 lb
2256202062-A	5' x 7'	2500 lb	1000 lb	750 lb
2256202063-A	5' x 7'	6000 lb	2500 lb	750 lb
2256202064-A	5' x 7'	10,000 lb	5000 lb	925 lb

VLC Quick Pit Frames—Mild Steel

Order Number	Description	Shipping Weight (lb)
56AD09140914	QP-FRAME, CS, 1-10K, 3 x 3'	125 lb
56AD12191219	QP-FRAME, CS, 1-10K, 4 x 4'	150 lb
56AD12191524	QP-FRAME, CS, 1-10K, 4 x 5'	200 lb
56AD12191829	QP-FRAME, CS, 1-10K, 4 x 6'	200 lb
56AD15241524	QP-FRAME, CS, 1-10K, 5 x 5'	200 lb
56AD15242134	QP-FRAME, CS, 1-10K, 5 x 7'	250 lb

VLC Mild Steel Ramps

56KE09140914	Ramp 3' W x 3' L—tread plate	215 lb
56KE12190914	Ramp 4' W x 3' L—tread plate	240 lb
56KE15240914	Ramp 5' W x 3' L—tread plate	300 lb

VLC Floor Scale—Stainless Steel (bead blasted, smooth plate deck finish)

316 SS

Order Number	Platform Size (ft)	Capacity (lb)	Load Cell Size (lb)	Shipping Weight (lb)
2256232012-A	3' x 3'	2500 lb	1000 lb	250 lb
2256232013-A	3' x 3'	6000 lb	2500 lb	250 lb
2256232022-A	4' x 4'	2500 lb	1000 lb	400 lb
2256232023-A	4' x 4'	6000 lb	2500 lb	400 lb
2256232024-A	4' x 4'	10,000 lb	5000 lb	475 lb
2256232032-A	4' x 5'	2500 lb	1000 lb	475 lb
2256232033-A	4' x 5'	6000 lb	2500 lb	475 lb
2256232034-A	4' x 5'	10,000 lb	5000 lb	550 lb
2256232042-A	5' x 5'	2500 lb	1000 lb	500 lb
2256232043-A	5' x 5'	6000 lb	2500 lb	500 lb
2256232044-A	5' x 5'	10,000 lb	5000 lb	625 lb
2256232052-A	4' x 6'	2500 lb	1000 lb	500 lb
2256232053-A	4' x 6'	6000 lb	2500 lb	500 lb
2256232054-A	4' x 6'	10,000 lb	5000 lb	675 lb
2256232062-A	5' x 7'	2500 lb	1000 lb	750 lb
2256232063-A	5' x 7'	6000 lb	2500 lb	750 lb
2256232064-A	5' x 7'	10,000 lb	5000 lb	925 lb

VLC Quick Pit Frames—Stainless Steel

Order Number	Description	Shipping Weight (lb)
56BD09140914	QP-FRAME, SS, 1-10K, 3 x 3'	125 lb
56BD12191219	QP-FRAME, SS, 1-10K, 4 x 4'	150 lb
56BD12191524	QP-FRAME, SS, 1-10K, 4 x 5'	200 lb
56BD12191829	QP-FRAME, SS, 1-10K, 4 x 6'	200 lb
56BD15241524	QP-FRAME, SS, 1-10K, 5 x 5'	200 lb
56BD15242134	QP-FRAME, SS, 1-10K, 5 x 7'	250 lb

VLC Stainless Steel Ramps

56LG09140914	Ramp 3' W x 3' L—smooth plate	215 lb
56LG12190914	Ramp 4' W x 3' L—smooth plate	240 lb
56LG15240914	Ramp 5' W x 3' L—smooth plate	300 lb

VLC Accessories

VLXA0201	Locating Plates (set of two)	5 lb

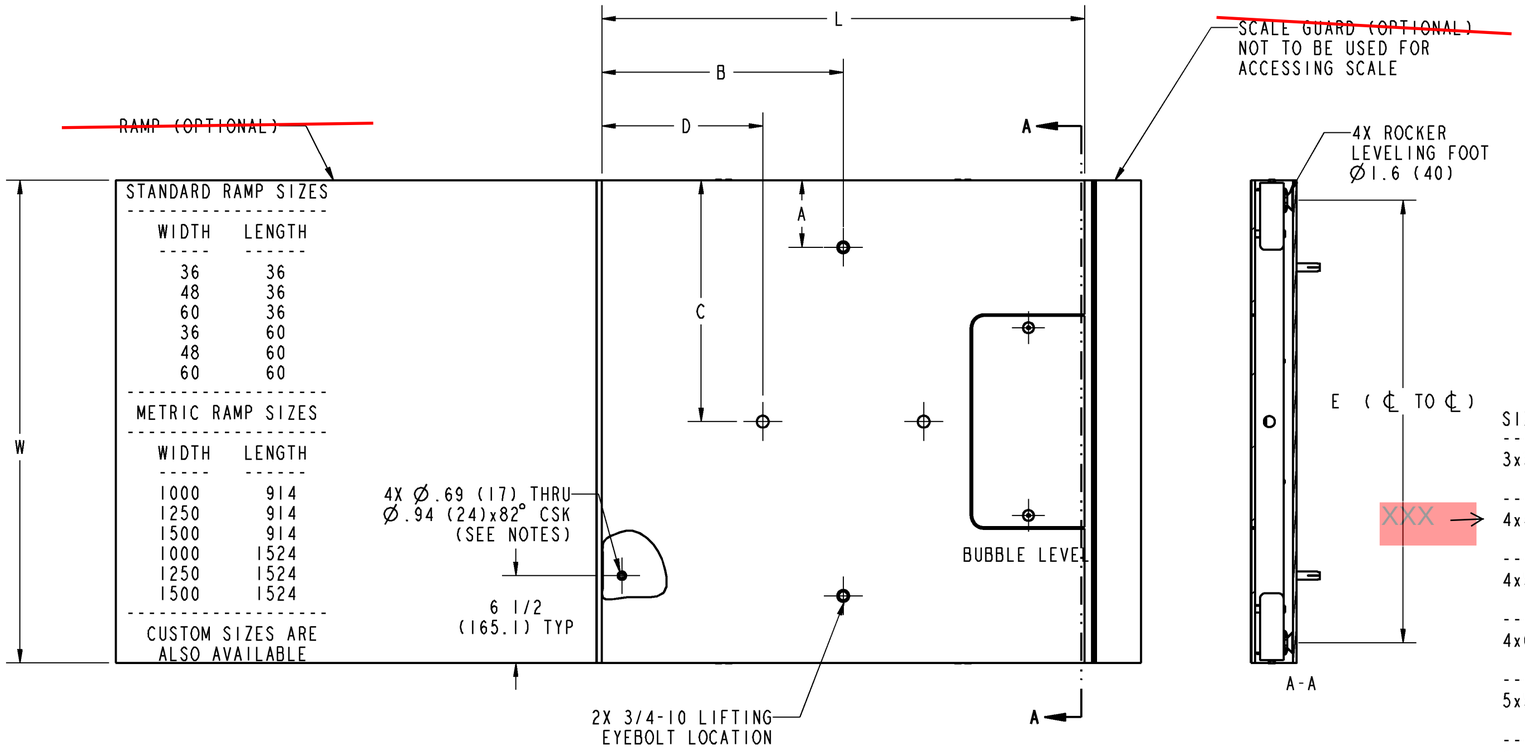

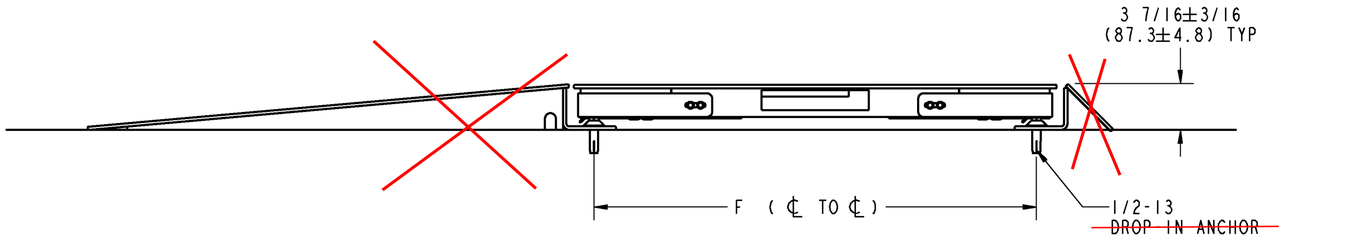

Drop-in Anchors are not used for scale, only for scale guards or ramps.

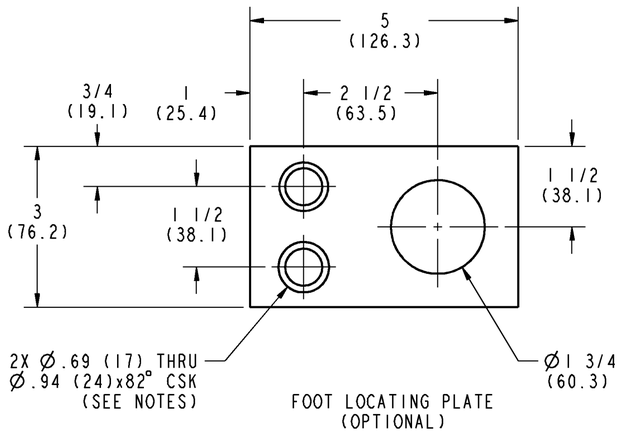

Construction is 316 SS for scale and frame

SIZE	CAPACITY	W	L	A	B	C	D	E	F
3x3	1K/600Kg-5K/3000Kg	36	36	5	18	---	---	33	33
	10K/6000Kg	36	36	6.5	18	---	---	33	33
4x4	1K/600Kg-5K/3000Kg	48	48	---	---	24	12	45	45
	10K/6000Kg	48	48	---	---	24	12	45	45
4x5	1K/600Kg-5K/3000Kg	48	60	5	30	---	---	45	57
	10K/6000Kg	48	60	6.5	30	---	---	45	57
4x6	1K/600Kg-5K/3000Kg	48	72	5	36	---	---	45	69
	10K/6000Kg	48	72	6.5	36	---	---	45	69
5x5	1K/600Kg-5K/3000Kg	60	60	5	30	---	---	57	57
	10K/6000Kg	60	60	6.5	30	---	---	57	57
5x7	1K/600Kg-5K/3000Kg	60	84	5	42	---	---	57	81
	10K/6000Kg	60	84	6.5	42	---	---	57	81
1000x 1000	1K/600Kg-5K/3000Kg	1000	1000	---	---	500	305	924	924
	10K/6000Kg	1000	1000	---	---	500	305	924	924
1000x 1250	1K/600Kg-5K/3000Kg	1000	1250	127	500	---	---	924	1174
	10K/6000Kg	1000	1250	165	500	---	---	924	1174
1250x 1500	1K/600Kg-5K/3000Kg	1250	1500	127	625	---	---	1174	1424
	10K/6000Kg	1250	1500	165	625	---	---	1174	1424
1500x 1500	1K/600Kg-5K/3000Kg	1500	1500	127	750	---	---	1424	1424
	10K/6000Kg	1500	1500	165	750	---	---	1424	1424
CUSTOM	54" x 54" 5,000 lbs	54	54	5	27	---	----	51	51
SIZE	CAPACITY	W	L	A	B	C	D	E	F

NOTES:

1. DIMENSIONS IN ( ) ARE IN MILLIMETERS.
2. TO INSURE PROPER WEIGHING THE SCALE MUST BE INSTALLED LEVEL. WITHOUT CORNER TO CORNER ROCKING. ADJUST THE LEVELING FEET UP OR DOWN AS NEEDED TO LEVEL AND REMOVE ANY ROCKING.
3. SECURE RAMPS, LOCATING PLATES, AND SCALE GUARDS TO FLOOR WITH Ø1/2 ANCHORS (INCLUDED WITH OPTIONAL ACCESSORIES).
4. WHEN USING THE OPTIONAL ACCESSORIES THE RUBBER PAD ATTACHED TO THE BOTTOM OF THE FOOT MUST BE REMOVED.

Ocotillo WRF Expansion Project
Job # 861503
Section 13466 Floor Scale and Instruments
Prepared for
Su□dt□McC□rth□□□ Jo□t □e□ture
Provided by
Mett□r To□edo □□C

REV	CHANGE	BY	DATE
A	MODIFIED CORNER GUARDS	RLC	08/07/07

SCALE 0.125
DATE 02/16/07
DRN RLC APPD MEC

METTLER TOLEDO

TITLE 2256,LAYOUT,1-10K

UNLESS OTHERWISE SPECIFIED, ALL DIMENSIONS ARE IN INCHES, AND DIMENSIONAL TOLERANCES ARE:
FRACTIONAL ±1/16 DECIMAL .X ±.1 .XX ±.02 .XXX ±.005 ANGULAR X ± 1° .X ±.5°

THIS PRINT IS FURNISHED WITH THE UNDERSTANDING THAT THE ESSENCE THEREOF WILL NOT BE REPRODUCED IN WHOLE OR IN PART WITHOUT WRITTEN AUTHORIZATION OF METTLER-TOLEDO, INC. ALL DESIGNS ARE THE PROPERTY OF METTLER-TOLEDO, INC. AND WILL BE PROTECTED BY PATENTS.

TB207177 REV A

Weighing Terminals

Ready to Work

Performance and Versatility Delivered



Solutions for a Perfect Fit

Highly versatile in function. Constructed and approved for the harshest industrial environments. The IND570 is easily expanded with software, communication and control interfaces to meet process requirements – adding cost only when needed.



Flexible Control Options

Support for manual and automated weighing processes. Use operator routines to collect transaction data and guarantee consistency, quality and traceability. In automated systems, allow fast-updating digital I/O and integrated applications to take control, freeing operators for other assignments.



Secure, Efficient Access to Data

Convenient data management solutions provide data as you want it, when you need it. PLC, network, USB and standard serial communication interfaces available. Adapt data collection and transfer to meet the unique requirements of each weighing application.



Performance Monitoring

Improve system performance and avoid expensive down-time with proactive system monitoring. Smart, user-friendly diagnostic screens and reports provide important data to service personnel and system engineers, to help keep the system running at maximum potential.



IND570 Industrial Weighing Terminal

One Terminal, Many Solutions

Designed for performance and versatility, the IND570 industrial terminal is the easy choice for even the most challenging industrial weighing applications.

The IND570 features a broad offering of functions to manage weighing applications. Introducing advances in connectivity, performance verification and efficient, secure access to critical process data, the IND570 satisfies ever-increasing demand for measurement accuracy, reliability, efficiency and traceability.

Ocotillo WRF Expansion Project
Job # 861503
Section 13466 Floor Scale and Instruments
Prepared for
Su□dt□McC□rth□□□ Jo□t □e□ture
Provided by
Mett□r To□edo □□C

METTLER TOLEDO

Technical Specifications

Physical and Electrical

Enclosures	Harsh environment model: 304L Stainless steel, IP69K certified. Includes fixed-angle brackets for wall mounting Panel mount model: Stainless steel front panel, aluminum chassis and integrated mounting hardware. Certified IP65 protection
Weight	3.2 kg (7 lbs)
Operating environment	-10°C to +40°C (14°F to 104°F), 10% to 95% relative humidity, non-condensing
Input power	AC: 85-264 VAC, 49-61 Hz, 750 mA (harsh and panel enclosure types) DC: 20-29 VDC, 1.25A (panel-mounted enclosure only)

Scale Interface

Supported scale types	Analog: Up to 12 350 Ω load cells, 2 or 3 mV/V cells supported. 10 VDC excitation. Analog/Digital update rate >366 Hz IDNet: High-Precision K-Line, +12V versions only, including T-Brick cell, M-Cell and Point-ADC
Units	kg, lb, tons, metric tons, g, dwt, lb-oz, oz, ozt, custom unit. Unit switching and multiple unit printing supported
Capacity & increments	2,000,000 maximum capacity; maximum 100,000 display increments

Human-Machine Interface

Display	High contrast, high resolution OLED display with 25mm-high weight indication. Decreased power consumption with OLED technology
Status indicators	Gross, Net, active Range/Interval, Units, Motion, Center of Zero, MinWeigh, Service Icon
Metrology line	Displays capacity, increments and approval class
System line	Displays weighing system messages and application information
Auxiliary display	Select from SmartTrac™ (graphic display of weighing status), rate (weight/time) or discrete I/O status
Keypad	Tactile keypad for enhanced operator experience. Clear, Tare, Print, Zero keys. Navigation keyset. Alphanumeric keypad. 5 softkeys, programmable with up to 15 unique functions to customize operator interaction with a weighing application

Connectivity

USB Host	USB Host (standard): Type A connection, +5V at 500mA for connected devices. Supports external keyboards, barcode scanners and USB memory devices Use a USB hub for multiple device connection
Serial	COM1 serial port (standard) supports RS-232/422/485. Optional COM2 & COM3 serial ports support RS-232 and RS-232/422/485
Network	Optional Ethernet interface supports speeds of 10 Mb/s and 100 Mb/s using 10 Base-T, 100 Base-TX, 100 Base-FX, and 100 Base-T4. Fully compliant with IEEE standard 802.3 and 802.3x. Full duplex flow control supported. Supports 3 simultaneous socket connections.
Protocols	MT Continuous Output, MT Continuous Extended, CTPZ input, Demand Print, Continuous Template output, ARM100 Remote I/O, Shared Data Server access, SICS, ASCII input
Fieldbus	Supports any one of the following options: EtherNet/IP, Analog Output (4-20 mA or 0-10 VDC), Profibus® DP, ControlNet™, DeviceNet™, Modbus TCP
Discrete I/O	Either 2 inputs and 5 outputs or 5 inputs and 8 outputs available internally ARM100 Remote I/O modules can be used to expand total I/O support to 13 inputs and 20 outputs
Interface update rates	PLC cyclic data: 25 Hz. Int. Discrete I/O: 50 Hz. Ext. Discrete I/O (ARM100): 25 Hz

Integrated Applications

General	Simple, manual weighing, transaction counter, accumulation/totalization, automatic tare/print/clear, auto-zero maintenance, x10 weight display
Material Transfer	Standard software supports single material filling or dosing with integrated I/O control
Checkweighing	Static checkweighing with intuitive graphical display and integrated I/O support
Remote Display	Functions as a remote display (via a serial or ethernet connection) for another METTLER TOLEDO terminal. Simple function control (clear, tare, zero, print) provided through the HMI
Data tables	Target Table stores values for up to 200 material IDs. Tare Table stores up to 99 tare weights
Alibi Memory	Stores individual transaction data. Export as .csv file for further use
Printing	10 customizable templates. Manual and automatic print triggers. Standard data and service reports available. Print via serial and Ethernet ports. Direct print to connected USB memory device. Direct print to USB printer is not supported
ID Prompting	Store up to four 30-step custom routines to guide users through an operating sequence. Use to assure consistency and collection of transaction data. Add external keyboard or barcode scanner to facilitate data entry
USB File Transfer	

Optional Application PACs

Fill-570	Advanced control of automatic filling, dosing and blending of up to six materials. Refer to Fill-570 data brief for details
Drive-570	Supports Inbound/Outbound vehicle weighing. Refer to Drive-570 data brief for details
COM-570	Retains advanced features and functions of the IND570 while communicating with existing systems via legacy METTLER TOLEDO product protocols, including 8142 Host, 8530 Host, PT6S3 and SMA. Input Command Template allows the IND570 to recognize and respond to customer-specific commands
TaskExpert™	TaskExpert gives qualified programmers the ability to adapt the standard capabilities of the IND570 to more closely align with a user's specific application requirements

Performance

Diagnostics	Error and Maintenance Logs record system events. Service icon (🔧) displays to indicate an event requiring user/service attention. Terminal Status Report provides real-time system performance data
Email	Integrated email function can deliver system notifications to designated recipients. Proxy server login supported
Test Manager GWP®	Supports routine testing of weighing system for performance verification and compliance. Test procedures with performance tolerances are stored in the terminal. Recommended testing periods are monitored and users prompted when routine testing is needed. Standard test reports and GWP Log provide documentation for compliance efforts
Web Server	Built-in web server provides tools for examining terminal operation over the network using just a web browser

Approvals

Weights and Measures	**USA**	NTEP Class II 100,000d, Class III/IIIL 10,000d, CoC 13-123
	Canada	Class II 100,000d, Class III 10,000d, Class IIIHD 20,000d, AM-5593
	Europe	OIML R76 Class II approved divisions determined by platform; Classes III and IIII 10,000e, TC8458
	Pending	MID R51, MID R61, Australia, South Africa, Brazil
Hazardous areas	Please contact a METTLER TOLEDO representative for information about the IND570xx models for Division 2 and Zone 2/22 hazardous areas	
Product Safety		

Terminal Dimensions

Panel-Mounted Enclosure

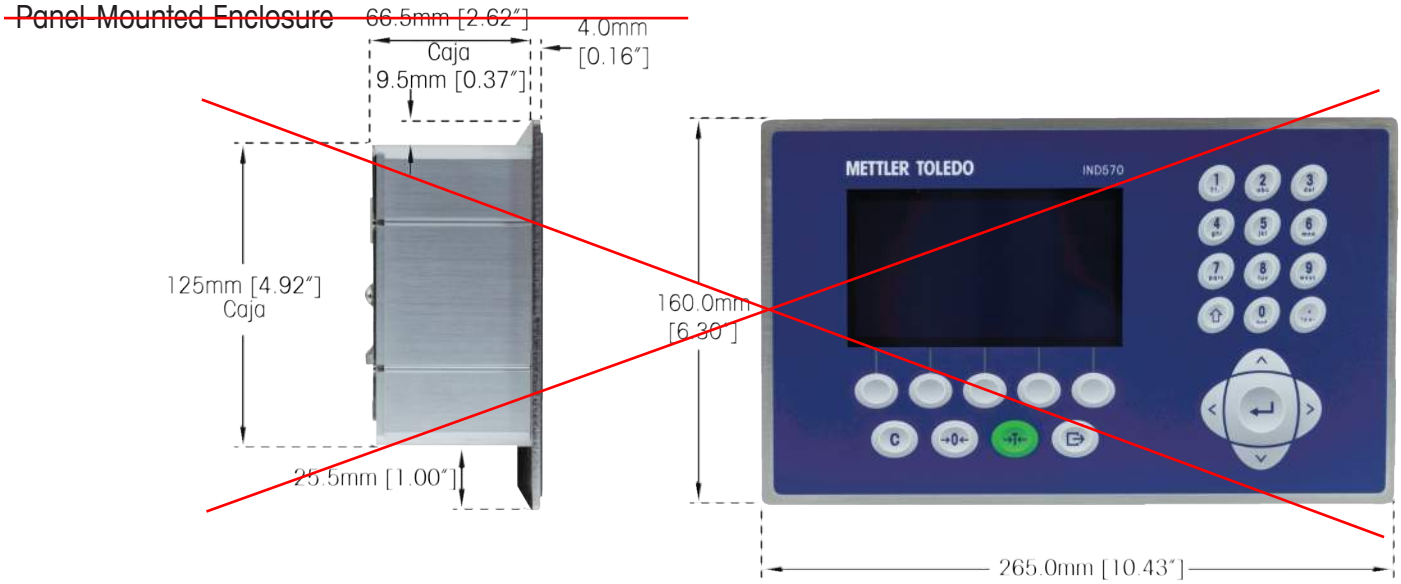

Enclosure for Harsh Environments

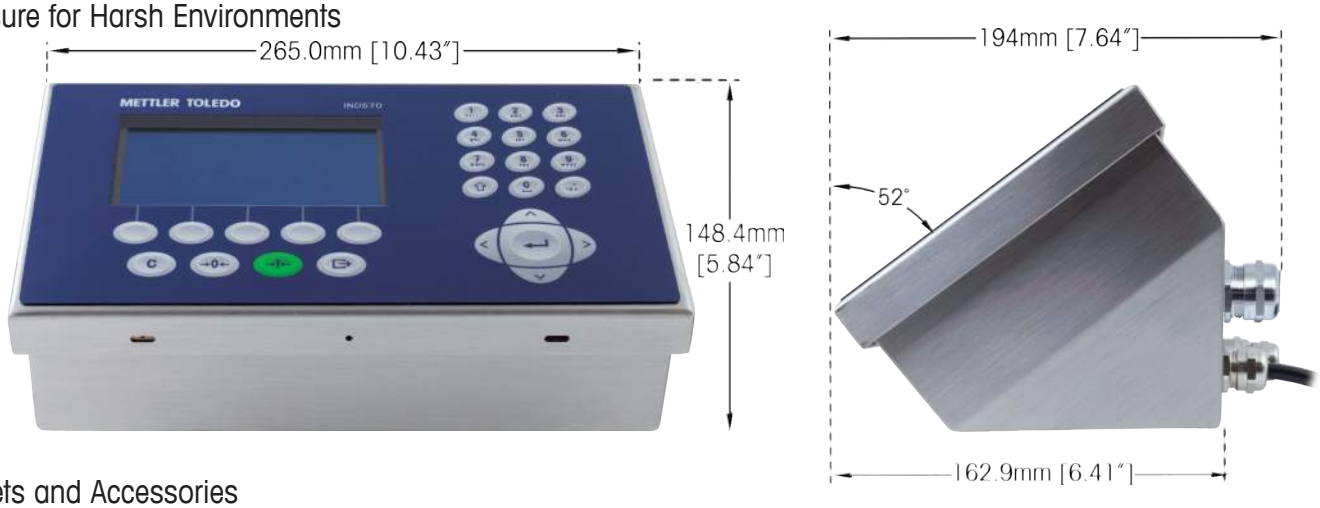

Brackets and Accessories



Wall Mounting Brackets
[Included with harsh terminal]



Positionable Bracket
[22015188]



USB Extension Kit
[301139560]



Ethernet Extension Kit
[30139562]

Mettler-Toledo, LLC
1900 Polaris Parkway
Columbus, OH 43240
Phone 800 638 8537

Subject to technical changes
© 04/2015 Mettler-Toledo, LLC
30237957

www.mt.com/IND570
For more information

Ocotillo WRF Expansion Project
Job # 861503
Section 13466 Floor Scale and Instruments
Prepared for
Su□dt□McC□rth□□□ Jo□□t □e□ture
Provided by
Mett□r To□edo □□C

1.5. Wiring

⚠ WARNING

DO NOT APPLY POWER TO THE IND570 TERMINAL UNTIL INSTALLATION OF COMPONENTS AND EXTERNAL WIRING HAS BEEN COMPLETED.

⚠ WARNING

IF THIS DEVICE IS USED IN AN AUTOMATIC OR MANUAL FILLING CYCLE, ALL USERS MUST PROVIDE A HARD-WIRED EMERGENCY STOP CIRCUIT OUTSIDE THE DEVICE OF CIRCUITRY. FAILURE TO OBSERVE THIS PRECAUTION COULD RESULT IN BODILY INJURY.

The maximum recommended cable length for the 0-10 VDC output is 50 feet (15.2 meters). The maximum recommended cable length for the 4-20 mA output is 1,000 feet (300 meters). The recommended cable for use with the analog output is shielded two-conductor stranded 20-gauge cable (Belden #8762 or equivalent), which is available from METTLER TOLEDO using part number 510220190. See Figure 1-3 for connection and termination information.

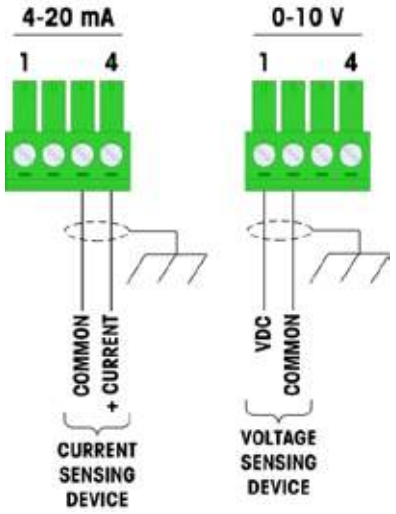

NOTES:

USE TWO-CONDUCTOR SHIELDED CABLE.

MINIMUM RESISTANCE OF DEVICE LOAD: 500 OHMS.

WIRE SIZE: 18 AWG (.823 mm^2) MAXIMUM 24 AWG (0.205 mm^2) MINIMUM.

Figure 1-3: Analog Output Kit Wiring Connections

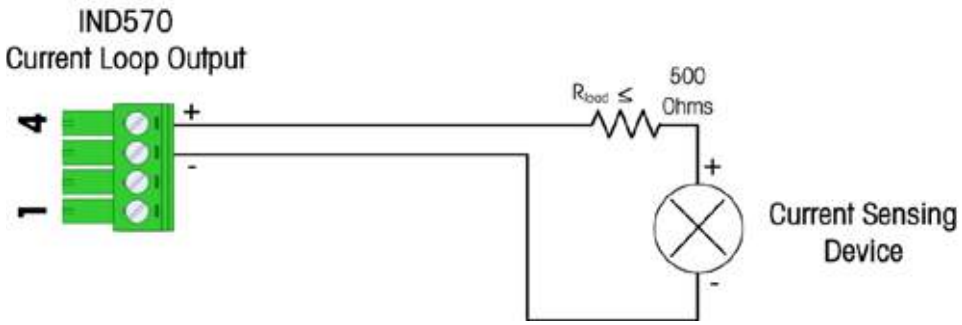

Figure 1-4: Typical Current Loop connection

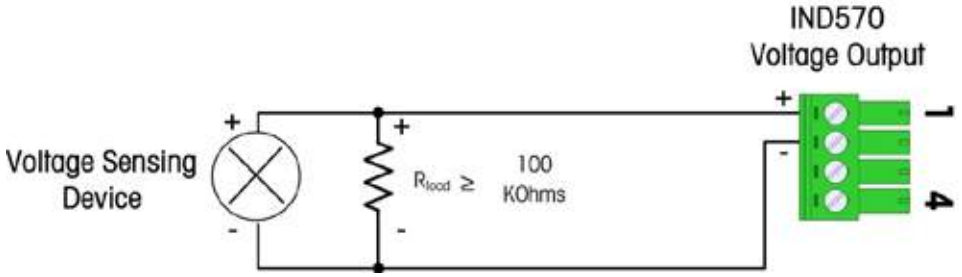

Figure 1-5: Typical Voltage Measurement Connection

1.6. Spare Parts

There are no associated spare parts with the Analog Output option kit. The kit number is 71209099. Table 1-3 shows what the kit contains.

Table 1-3: Analog Output Option Kit

Description	Qty.
Installation Instructions	1
PCB Package	1
Installation Kit	1
Gland Kit	1

1.7. Troubleshooting

Before attempting to troubleshoot the output, be sure to read the “Analog Output Operation” section of the manual – paying particular attention to Table 1-1, which explains the various operation modes for the output for the conditions of Under Zero and Over High Limit.

Check the LED Status as indicated in Figure 1-6. Use Table 1-4: to verify that the operational state of the Analog Output board matches the configuration selected.

1.7.1. No SIgnal

If no signal is being received from the IND570, check the following

The purpose of this page of the IND570 Tech Manual inserted into the Submittal is to confirm that Discrete I/O are in fact part of the instrumentation package that will be delivered for this project. See highlighted area below.

For example, as Figure 4-10 shows, only the **Large** size displays the high and low tolerance values, while the **Small** size only displays the current scale weight and the bar graph.

4.6.2.5. Terminal > Softkeys

The terminal offers a selection of softkeys which are useful for simple filling activities.

The operator must be able to select a target and to start the filling process so, at a minimum, the **Target** or the **Target Table** softkey must be assigned, as well as either the **Target Start** or **Target Control** softkey. Refer to section 4.6.3, the **Operational Sequence Example**, to see how these softkeys function.

4.6.2.6. Communication > Discrete I/O > Inputs

In some circumstances, it is necessary to perform filling tasks without pressing buttons on the terminal's front panel. This is achieved by configuring discrete inputs which correspond to the **SmartTrac**, **Target Start/Resume** and **Target Pause/Abort** softkeys, so that remote interface devices, such as large buttons, control filling. Of course, the terminal must have one of its DI/O option boards installed for this to be possible. Then it is simply a matter of mapping the remote input device to the address for the corresponding input. For instance, Target Start/Resume might be mapped to input address 0.1.1, and Target Pause/Abort to input address 0.1.2.

4.6.3. Operational Sequence Examples

4.6.3.1. Automatic Filling

When the terminal is performing filling operations automatically, the operator's main interaction with the process is to issue the start command for each fill. Essentially, this merely confirms that the correct vessel is on the scale and starts the terminal on its fill sequence. Once the fill is complete, the terminal waits to be instructed to start again, after the filled vessel has been removed and a new one placed on the scale.

4.6.3.1.1. Typical Automatic Filling Sequence

In automatic filling, the terminal controls the addition of material to the vessel on the scale, so for the most part the operator merely observes the process, ready to intervene if an error should occur.

The typical filling sequence that follows assumes that a target has been selected, and that a vessel is on the scale, the scale is tared, and the terminal is in net mode.

1. Press the **Target Control** softkey . The Target Control screen will appear, with **Back** and **Target Start** softkeys displayed, and a status message reading **Ready**.
2. After checking that the right vessel is on the scale, press .
3. The terminal starts the filling process. The Target Control screen now shows a status message, **Running**, and a **Pause** softkey in place of **Target Start**. It also adds a **Stop/Abort** softkey in the fifth position. Press one of these to pause or abandon the filling process. When **Pause** is pressed, the **Start** softkey reappears, functioning as a **Resume** button. **Stop/Abort** exits the **Target Control** screen and returns to the view to the terminals home screen. Press the **Back** softkey to display SmartTrac.

2256 VLC

WEIGHT-PLATE®
Analog Floor Scales

Installation and Service Manual

Ocotillo WRF Expansion Project
Job # 861503
Section 13466 Floor Scale and Instruments
Prepared for
Su□dt□McC□rth□□□ Jo□□t □e□ture
Provided by
Mett□er To□edo □□C

© Mettler-Toledo, Inc. 1997, 1998, 2002, 2004

No part of this manual may be reproduced or transmitted in any form or by any means, electronic or mechanical, including photocopying and recording, for any purpose without the express written permission of Mettler-Toledo, Inc.

U.S. Government Restricted Rights: This documentation is furnished with Restricted Rights.

METTLER TOLEDO

Publication Revision History

An overview of this manual's revision history is compiled below.

Publication Name: 2256 VLC WEIGHT-PLATE Analog Floor Scales Installation and Service Manual

Publication Part Number: A14914100A Publication Date: 8/97

Part Number	Date	Revisions
B14914100A	11/98	Added Class III acceptable readability data on page 1-1.
C14914100A	8/02	Revised manual so that it covers the new 2256 VLC design.
D14914100A	8/04	Added information about new leveling foot.

INTRODUCTION

This publication is provided solely as a guide for individuals who have received Technical Training in servicing the METTLER TOLEDO product.

Information about METTLER TOLEDO Technical Training can be obtained by writing, calling, or faxing:

METTLER TOLEDO
1900 Polaris Parkway
Columbus, Ohio 43240 USA
Phone: (614) 438-4511
Fax: (614) 438-4958
www.mt.com

FCC Notice

This device complies with Part 15 of the FCC Rules and the Radio Interference Requirements of the Canadian Department of Communications. Operation is subject to the following conditions: (1) this device may not cause harmful interference, and (2) this device must accept any interference received, including interference that may cause undesired operation.

This equipment has been tested and found to comply with the limits for a Class A digital device, pursuant to Part 15 of FCC Rules. These limits are designed to provide reasonable protection against harmful interference when the equipment is operated in a commercial environment. This equipment generates, uses, and can radiate radio frequency energy and, if not installed and used in accordance with the instruction manual, may cause harmful interference to radio communications. Operation of this equipment in a residential area is likely to cause harmful interference in which case the user will be required to correct the interference at his own expense.

METTLER TOLEDO RESERVES THE RIGHT TO MAKE REFINEMENTS OR CHANGES WITHOUT NOTICE.

DECLARATION OF CONFORMITY

□o□□or□ t□tser□□ru□□
D□c□r□t□o□de co□□or□ t□
Dec□r□c□□ de Co□□or□ d□d
Co□□or□ te□ts□er□□r□□
D□ch□r□□o□e d□co□□or□ t□

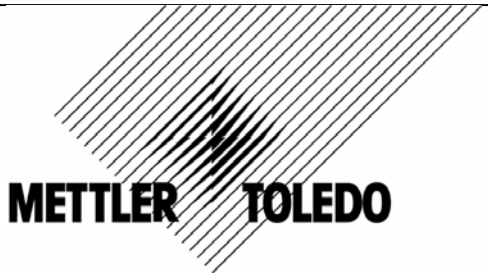

We□W□□ous□Wj□□o□□ **Mettler-Toledo, Inc.**
1150 Dearborn Drive
Worthington, Ohio 43085
USA

declare under our sole responsibility that the product,
er□□re□□□ □□e□□□er □er□□twortu□□□d□□ d□eses Produ□t□
d□c□ro□s sous □otre seu□e respo□s□□□t□ □ue □e produ□t□
dec□r□□ os□□□jo □uestr□ so□ respo□s□□□d□d□□ue e□producto□
□er□□re□ o□der o□□e □er□□twoorde□j□he□d□t het product□
d□ch□r□□□ o sotto □ostr□ u□c□ respo□s□□□t□□che □prodotto□

Model: **793**

Type: **Analog Load Cell**

to which this declaration relates is in conformity with the following standard(s) or other normative document(s).
□u□d□s s□ch d□ese □r□□ru□□ □e□eht□□ t□der□de□ o□□e□de□ □or□ □e□□oder R□cht□□□e□□□□ere□st□□ □t□
□u□ue□se r□□re cette d□c□r□t□□ est co□□or□ e □ □□ □u□□□or□ e□s□ou □u□□□docu□ e□t□s□□or□ □t□□s□□
□□ue se re□ere est□ dec□r□c□□ es co□□or□ e □ □□s□□or□ □□s□u otro□s□docu□ e□to□s□□or□ □t□o□s□□
W□□r□□□r de□e □er□□r□□□ □erwjst□□□□ de □o□e□de □or□ □e□□o□r□ht□j□□e□□□e□□twoordt□
□ cu□s□r□er□sce □uest□ d□ch□r□□□o□e □co□□or□ e □□□□e se□ue□te□□□or□ □□e o docu□ e□to□□□or□ □t□o□□□

in combination with an indicating terminal produced by Mettler-Toledo is in conformity with the following directives and standards.

Council directive on the harmonization of the laws of the Member states:	**Standards:**	**Certificate number (if applicable)**
re□t□□□ to □o□□□uto□ □t□c we□h□□□ □stru□e□t □□□□□□□□□□C□□□ e□ded □□ d□rect□e □□□□□□□□C□	□□ □□□□□□ □rt□□e □□□□□□□	

Worthington, Ohio USA, **February, 2003** **Mettler-Toledo, Inc.**

D□rre□□□oc□e□□M□□□□er □We□hts □ Me□sures
O□□ce o□We□hts □□d Me□sures

□ccord□□□ to □□ □□□□□□

PROPRIETARY NOTICE

The information contained in this publication is derived in part from proprietary and patented data of METTLER TOLEDO. This publication shall not be copied in whole or in part without prior written approval of METTLER TOLEDO, nor shall it be used for any purpose other than that intended. This document is subject to change without notice.

STANDARD WARRANTY

METTLER TOLEDO warrants that the equipment covered by this warranty will be free from defects in workmanship and material for two years from date of installation or twenty-six (26) months from date of shipment to the buyer, whichever comes first.

Should any such defects be found and reported during the first thirty (30) days after installation (if installation occurs during the warranty period), METTLER TOLEDO (herein referred to as the "Company") will, at its option, refund the purchase price or correct such defects, furnishing replacement parts and service free of charge to the buyer. For the remainder of the first 12 months of the warranty term, the Company will furnish necessary replacement parts and on-site technician's service free of charge, provided the Buyer agrees to pay reasonable technician's travel time, vehicle mileage, and associated travel expenses to and from the nearest authorized Company service location. If the equipment is covered by a two-year warranty, for the last 12 months or remaining balance of the warranty period, whichever comes first, the Company will furnish the necessary replacement parts to the Buyer free of charge, provided that the Buyer agrees to pay reasonable technician's on-site labor services, travel time, mileage, and expenses to and from the nearest authorized Company service location. The following are NOT covered under any of these warranties:

1. Initial installation and ongoing scale calibration.
2. Damage to scale components by gross abuse, fire, flooding, explosion, water, voltage surges, or civil disturbance.
3. Normal maintenance or consumable items.

This warranty covers only the Model 2256 VLC WEIGHT-PLATE floor scale. Refer to METTLER TOLEDO Standard Product Warranty for coverage of other scale system components, including scale instrument, printer, and/or other accessories.

THE COMPANY EXPRESSLY WARRANTS THE EQUIPMENT MANUFACTURED BY IT AS SET FORTH HEREIN. THE COMPANY MAKES NO OTHER WARRANTIES EITHER EXPRESSED OR IMPLIED (INCLUDING WITHOUT LIMITATION WARRANTIES AS TO MERCHANTABILITY OR FITNESS FOR A PARTICULAR PURPOSE). IN ADDITION, THIS DOCUMENT SHALL CONSTITUTE THE SOLE AND EXCLUSIVE REMEDIES OF THE BUYER FOR ANY BREACH BY THE COMPANY OF ITS WARRANTIES HEREIN.

COMPANY LIABILITY UNDER THIS WARRANTY OR ANOTHER WARRANTY, WHETHER EXPRESSED OR IMPLIED IN LAW OR FACT, SHALL BE LIMITED TO THE REPAIR OR REPLACEMENT OF DEFECTIVE MATERIAL AND WORKMANSHIP, AND IN NO EVENT SHALL IT BE LIABLE FOR CONSEQUENTIAL OR INDIRECT DAMAGES.

This warranty coverage is applicable only to the United States of America.

Export Products: The Company warrants equipment destined for export or sold for export to be free from defects in workmanship and material for a period of one year from date of installation or 18 months from date of shipment to the Buyer, whichever occurs first. Should any such defect be found within that period, parts will be furnished free of charge (ex works) point of origin or final distribution center. If the Buyer requests the performance of warranty work provided for under the foregoing warranty outside of the contiguous United States, the Buyer shall be required to pay for labor, travel time, living, and travel expenses of any personnel required to perform such warranty work.

APPLICATION GUIDES

The only warranty of METTLER TOLEDO is for the product it supplies under the Product Warranty Statement listed above. Weighing application guidelines pertain to METTLER TOLEDO products.

Precautions

READ this manual BEFORE operating or servicing this equipment.

FOLLOW these instructions carefully.

SAVE this manual for future reference.

DO NOT allow untrained personnel to operate, clean, inspect, maintain, service, or tamper with this equipment.

ALWAYS DISCONNECT this equipment from the power source before cleaning or performing maintenance.

CALL METTLER TOLEDO for parts, information, and service.

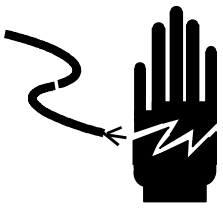

⚠ WARNING

PERMIT ONLY QUALIFIED PERSONNEL TO SERVICE THIS EQUIPMENT. EXERCISE CARE WHEN MAKING CHECKS, TESTS, AND ADJUSTMENTS THAT MUST BE MADE WITH POWER ON. FAILING TO OBSERVE THESE PRECAUTIONS CAN RESULT IN BODILY HARM.

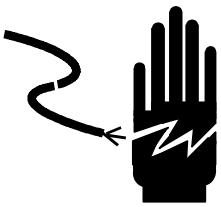

⚠ CAUTION

FOR CONTINUED PROTECTION AGAINST SHOCK HAZARD, CONNECT TO PROPERLY GROUNDED OUTLET ONLY. DO NOT REMOVE THE GROUND PRONG.

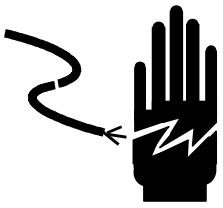

⚠ WARNING

DISCONNECT ALL POWER TO THIS UNIT BEFORE INSTALLING, SERVICING, CLEANING, OR REMOVING THE FUSE. FAILURE TO DO SO COULD RESULT IN BODILY HARM AND/OR PROPERTY DAMAGE.

⚠ CAUTION

BEFORE CONNECTING OR DISCONNECTING ANY INTERNAL ELECTRONIC COMPONENTS OR INTERCONNECTING WIRING BETWEEN ELECTRONIC EQUIPMENT, ALWAYS REMOVE POWER AND WAIT AT LEAST THIRTY (30) SECONDS. FAILURE TO OBSERVE THESE PRECAUTIONS COULD RESULT IN BODILY HARM OR DAMAGE TO OR DESTRUCTION OF THE EQUIPMENT.



⚠ CAUTION

OBSERVE PRECAUTIONS FOR HANDLING ELECTROSTATIC SENSITIVE DEVICES.



⚠ WARNING

USE EXTREME CAUTION WHEN LIFTING AND MOVING THE SCALE TO THE DESIRED LOCATION. DO NOT ATTEMPT TO LIFT AND MOVE THE SCALE BY YOURSELF OR INJURY COULD OCCUR.

CONTENTS

1 Introduction 1-1
General 1-1
Model Numbers 1-1
Load Cells 1-2
Load Cell Specifications 1-2
Approvals 1-2

2 Inspection and Site Selection 2-1
Inspection 2-1
Site Selection 2-1

3 Installation 3-1
Level the Base 3-1
Junction Box Wiring 3-2
Optional Locating Plates 3-3
Optional Ramps 3-4

4 Calibration 4-1
Shift Adjust 4-1
Analog Junction Box Shift Adjustment 4-1
Scale Calibration 4-3

5 Routine Care and Maintenance 5-1
General 5-1
Site Inspection 5-1
Platform Inspection 5-1

6 Troubleshooting 6-1
General 6-1
Isolate the Problem 6-2
Check Wiring 6-2
Check Load Cells 6-3
Check Mechanical Components 6-4
Load Cell Replacement 6-4

7 Service Parts 7-1
2256 VLC Floor Scale 7-1
Model 22562XXXXX-A 7-4
Model 22561XXXXX-A 7-4

8 Reference Material 8-1
Reference Drawings 8-1

Recommended Spare Parts 8-1

1 Introduction

General

Model 2256 VLC WEIGHT-PLATE® floor scales are fully electronic scales for general-purpose weighing. They are designed for top-of-floor installations and can be used as portable or permanently mounted scales.

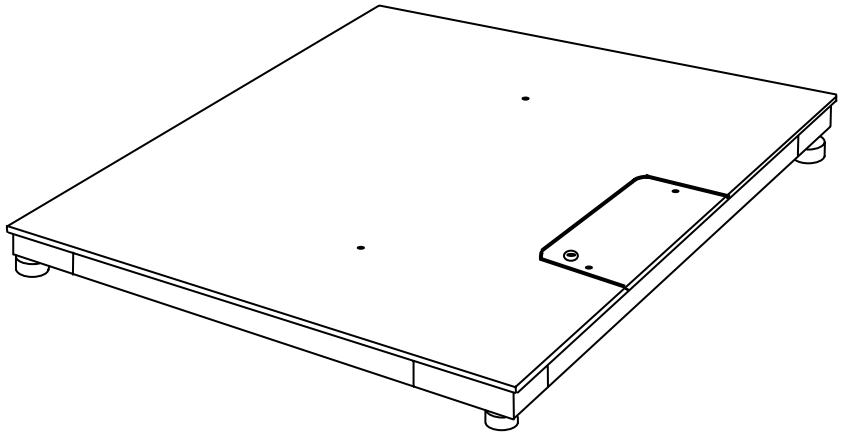

Figure 1-1: 2256 VLC Floor Scale

Model Numbers

The following table shows how standard model numbers are determined for currently available 2256 VLC floor scales.

XXXX	X	X	X	X	X	X	-X
Model	**Revision**	**Platform**	**Load Cell Metrology**	**Junction Box**	**Size**	**Scale Capacity**	**Scale Metrology**
2256	3	0 = Mild steel, tread plate 1 = Mild steel, smooth plate 2 = Stainless steel, tread plate 3 = Stainless steel, smooth plate	2 = 793 H44	0 = Analog	1 = 3x3 feet 2 = 4x4 feet 3 = 4x5 feet 4 = 5x5 feet 5 = 4x6 feet 6 = 5x7 feet	1 = 1,000 lb 2 = 2,500 lb 3 = 6,000 lb 4 = 10,000 lb	-A = 5,000d

Load Cells

Model 2256 VLC floor scales include stainless steel, cantilever-beam load cells with integral, four-conductor, shielded cables (see note). Individual load cell capacities are listed below:

NOTE: Scales measuring 5' x 7' use cables that are 20' long. Smaller scales use cables that are 8' long. DO NOT mix cables of different lengths within a platform.

Scale Platform Capacity	Capacity of Each Load Cell	Minimum Approved Graduation Size
2,500 lb	1,000 lb	0.5 lb
6,000 lb	2,500 lb	1.0 lb
10,000 lb	5,000 lb	2.0 lb

Load Cell Specifications

NOTE: Previous versions of the 2256 floor scale (Model 22561XXXXX-A) used 2-mV/V load cells.

Model Number	793
Rated Capacity (RC)	1,000 lb, 2,500 lb, 5,000 lb
Rated Output	3 mV/V
Maximum Excitation Voltage*	15 VDC or VAC rms
Recommended Excitation Voltage	15 VDC
Input Terminal Resistance	350 ohms
Output Terminal Resistance	350 ohms
Temperature Range (compensated)	+14°F to +104°F (-10°C to +40°C)
Safe Overload	150% RC
Safe Side Load	100% RC
Zero Balance	2.0% RC

*The power supply to the load cells is provided by the METTLER TOLEDO indicator.

Approvals

NTEP Certification

Model 793 load cells meet or exceed NIST Handbook-44 requirements for Class III 5,000 divisions (multiple cell). A Certificate of Conformance was issued under the National Type Evaluation Program (NTEP) of the National Conference of Weights and Measures (certificate number 92-108A3).

2 Inspection and Site Selection

Inspection

When the 2256 VLC floor scale is delivered, visually inspect it for any damage that might have occurred during shipping and handling. Inspect the following:

1. Platform assembly
2. Load cell and leveling feet
3. Load cell cables
4. Load cell summing junction box

If you find any damage, contact your freight carrier immediately.

Site Selection

Many problems associated with floor scale installations are caused by improper site conditions. Before installing the scale, check the proposed location for the following conditions:

1. The area where the scale will be located should be level. The scale's leveling feet can be adjusted to compensate for floors that are slightly out of level.
2. The floor/support at each corner of the scale must be strong enough to support weight equal to the maximum weighing capacity of the scale.
3. There should be proper drainage away from the scale.
4. There should be no heavy vibrations or wind currents at or near the scale.
5. The scale should not be subjected to excessive or unusual loading due to the location or type of equipment used.

If the site is acceptable, proceed with the installation. If not, choose a new location or select another scale.

3 Installation

Level the Base

Set up the scale in the location where it will be used. To move the scale, install 3/4-10 eyebolts (P/N MZ0905000003) in the threaded holes in the top of the scale platform. Attach a chain to the eyebolts, and use it to lift the scale with a forklift.

Once the scale is in place, make sure the scale's platform is level. Adjust the leveling feet as needed to level it. All four feet should touch the floor so that the scale does not rock or teeter.

- To adjust a leveling foot upward or downward, use a 1/2-inch wrench to turn the milled flats on the foot (see Figure 3-1). If you are adjusting the foot upward, loosen the jam nut before turning the foot. When the foot is correctly positioned, tighten the jam nut with your fingers so that it is snug against the load cell.

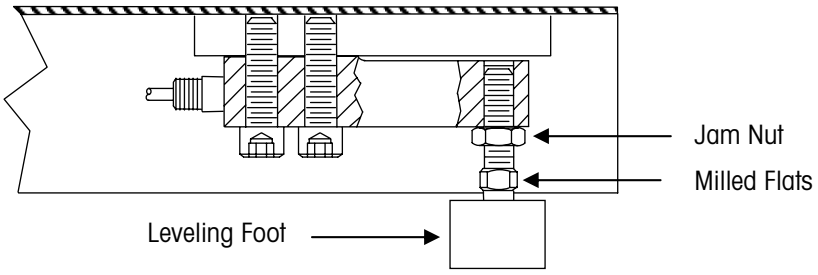

Figure 3-1: Leveling Foot Assembly

- Check the level that is located on the scale platform's junction box cover. Adjust the leveling feet until the bubble on the level is centered (see Figure 3-2).

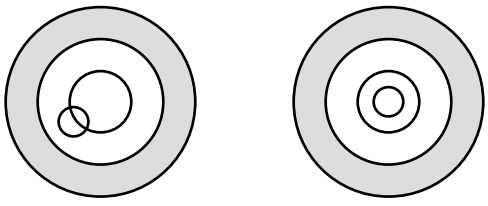

Figure 3-2: Leveling the Scale Base

- You must level the scale each time you move it to a new location.

Junction Box Wiring

A 2256 VLC floor scale must be used with a compatible analog indicator. The scale's load cell outputs are summed by an analog junction box. Open the junction box, and connect the home run cable from the scale indicator to the input terminals on the junction box PCB. See Figure 3-3 and Table 3-1 for the correct cable connections.

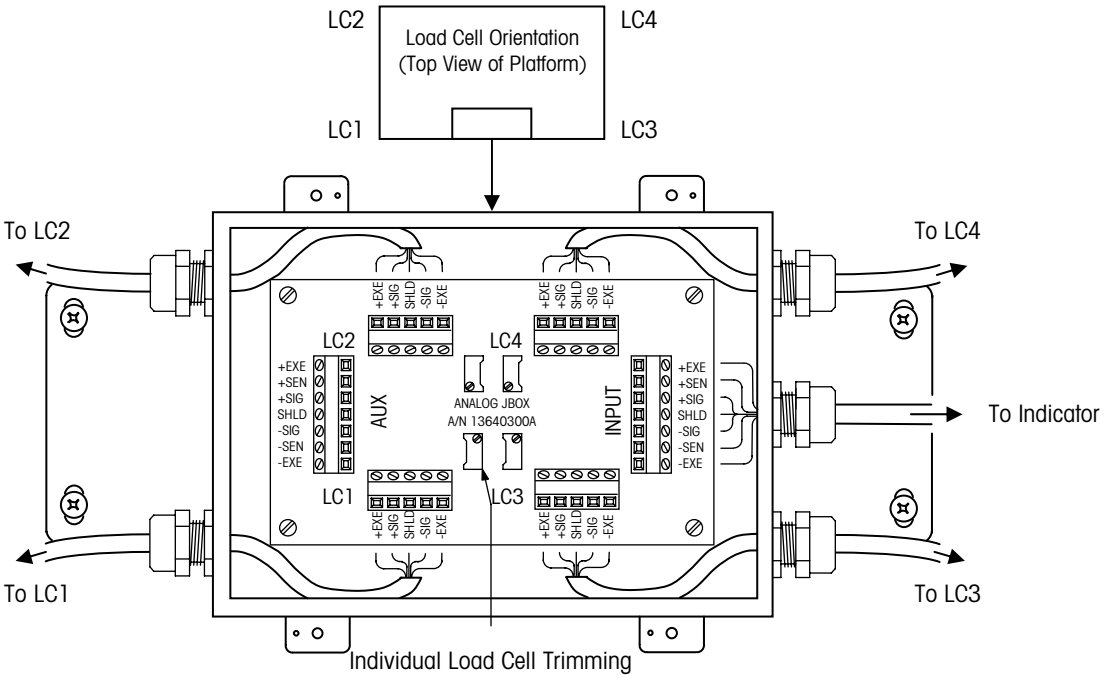

NOTE: Do not cut load cell cables. Cutting a cable will affect compensation and void the warranty.

NOTE: Turn all potentiometers fully clockwise prior to calibration.

Figure 3-3: Analog Junction Box Detail

Load Cell Wiring		Instrument Cable Wiring*	
Function	**Color**	**Function**	**Color**
+Excitation	Green	+Excitation	White
+Sense	Not Used	+Sense	Yellow
+Signal	White	+Signal	Green
Shield	Yellow	Shield	Orange
-Signal	Red	-Signal	Black
-Sense	Not Used	-Sense	Red
-Excitation	Black	-Excitation	Blue
		*(Based on METTLER TOLEDO Cable Number 510624370)	

Table 3-1: Analog Junction Box Wiring Codes

Optional Locating Plates

Locating plates are available for scales that will be mounted permanently. Two locating plates installed at adjacent corners of a scale are usually sufficient.



⚠ WARNING

USE EXTREME CAUTION WHEN LIFTING AND MOVING THE SCALE TO THE DESIRED LOCATION. DO NOT ATTEMPT TO LIFT AND MOVE THE SCALE BY YOURSELF OR INJURY COULD OCCUR.

1. Position the scale in the location where it will be installed.
2. Lift the scale enough to position the locating plates under the corners of the scale.
3. Lower the scale carefully so that its leveling feet fit inside the large holes in the locating plates.
4. Drill holes in the floor for the anchor bolts (two for each locating plate). Use the bolt holes in the plates as guides (see Figure 3-4).
5. Install 1/2-inch insert-type anchor bolts through the bolt holes in the locating plates to anchor the plates to the floor.

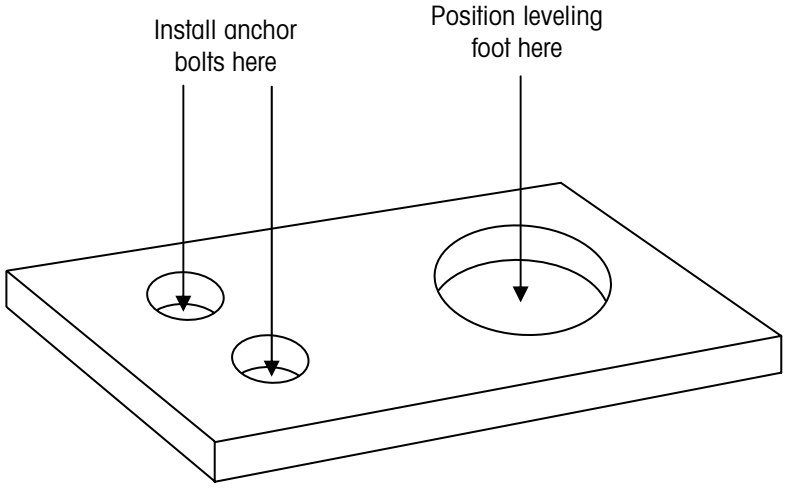

Figure 3-4: Locating Plate Installation

Optional Ramps

You can install one or more ramps with a 2256 VLC floor scale. Standard ramps are available in widths of 36, 48, and 60 inches.



⚠ WARNING

USE EXTREME CAUTION WHEN LIFTING AND MOVING THE SCALE TO THE DESIRED LOCATION. DO NOT ATTEMPT TO LIFT AND MOVE THE SCALE BY YOURSELF OR INJURY COULD OCCUR.

1. Position the ramp in the location where it will be installed. Check to make sure that you have allowed room for the scale and for any other ramps that will be installed.
2. Drill holes in the floor for the two anchor bolts. Use the bolt holes in the flanged portion of the ramp as guides (see Figure 3-5).
3. Install 1/2-inch insert-type anchor bolts through the bolt holes in the flange to anchor the ramp to the floor.
4. Lower the scale carefully so that its leveling feet fit inside the large holes in the flange.

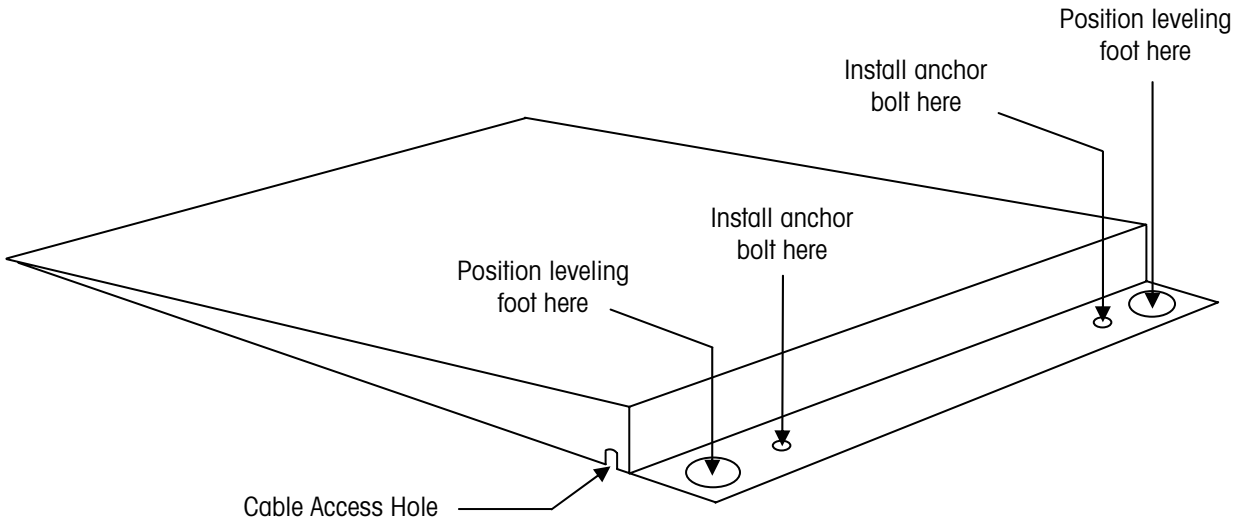

Figure 3-5: Ramp Installation

If you will be installing a second ramp, lift the scale and position the large holes in the ramp's flange under the leveling feet on the opposite side of the scale. Then move the scale out of the way. Drill bolt holes, install anchor bolts, and then lower the scale carefully so that its leveling feet fit inside the large holes in the ramp flanges.

4 Calibration

Shift Adjust

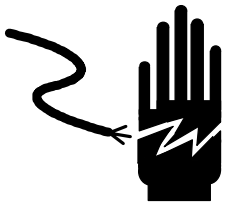

⚠ WARNING

PERMIT ONLY QUALIFIED PERSONNEL TO SERVICE THIS EQUIPMENT. EXERCISE CARE WHEN MAKING CHECKS, TESTS, AND ADJUSTMENTS THAT MUST BE MADE WITH POWER ON. FAILING TO OBSERVE THESE PRECAUTIONS CAN RESULT IN BODILY HARM.

When you shift adjust a scale, you are adjusting the output voltage (signal) of each load cell so that all load cells in the system produce a consistent signal. A correctly adjusted scale will give the same weight reading no matter where on the platform you place a test weight. Each 2256 VLC floor scale is shift adjusted at the factory. For a new installation, the only adjustment that should be needed is minor load cell trimming.

After the scale has been installed, check all mechanical parts to make sure that they work properly. Then check the scale's repeatability by placing a test weight on the same location on the platform several times to make sure that you get the same weight reading each time. After checking for repeatability, adjust the load cell trimming potentiometers as needed.

Analog Junction Box Shift Adjustment

Use the following procedure to trim the load cells:

1. Remove the access plate from the scale platform, and open the junction box.
2. Figure 4-1 shows test weight locations (A, B, C, and D) at the center of each quadrant of the scale platform. Place a test weight equal to 1/2 of the rated scale capacity at location A and record the weight reading. Then move the test weight to location B and record the weight reading. Continue until you have taken a weight reading at each of the four locations.

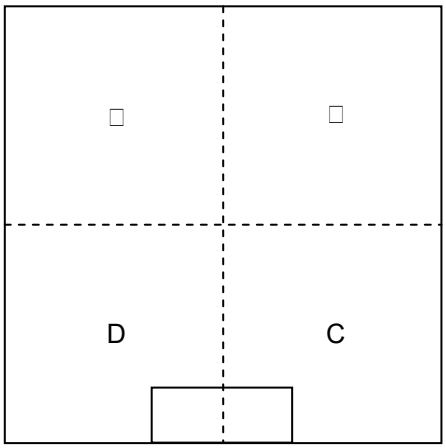

Figure 4-1: Test Weight Locations

3. Place the test weight at the location immediately clockwise from the location at which you got the lowest weight reading. Then adjust the trimming potentiometer for the load cell that corresponds to the corner of the scale where the test weight is positioned (see Figure 4-2). Make the adjustment by turning the potentiometer until the weight reading matches the lowest reading.

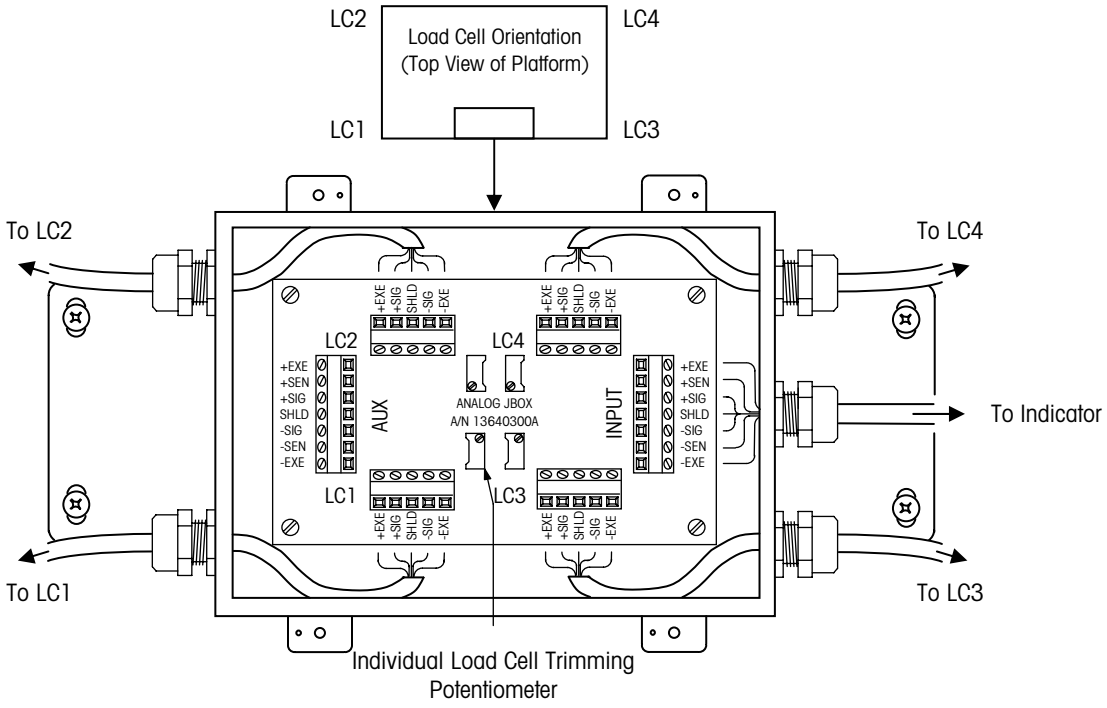

Figure 4-2: Load Cell Trimming Potentiometers

4. Proceeding clockwise, repeat the adjustment described in Step 3 for the next two test weight locations.

NOTE: Because the trimming potentiometers interact with each other, any adjustment will affect the weight readings at all four corners of the scale.

5. Repeat Steps 2 to 4 until the weight readings at all corners of the platform are the same or are within the specified National Institute of Standards and Technology (NIST) Handbook 44 Scale Accuracy Requirements.
6. Replace the junction box lid and the access plate.

Scale Calibration

METTLER TOLEDO recommends calibrating the scale using test weights equal to the scale's capacity. Follow the calibration instructions in the manual provided with the scale indicator.

5 Routine Care and Maintenance

General

Once the scale has been installed, have an authorized METTLER TOLEDO representative inspect and calibrate it periodically. If the scale is used for legal-for-trade purposes, consult the local weights and measures authorities for minimum inspection requirements. Contact your local authorized METTLER TOLEDO service representative for information about periodic inspection and calibration services.

Site Inspection

Make sure that the scale site remains in good condition. Check for alterations in the surrounding floor, excessive vibrations, and possible overloading conditions.

Platform Inspection

During periodic inspections of the scale, check the following:

1. Are there any unusual wear points, paths, or marks on the weighing platform?
2. Is the scale frame bent or damaged?
3. Is the junction box lid properly sealed and are all cable connectors tight against the enclosure?
4. Is there any moisture or foreign material around or inside the junction box assembly?
5. Is the instrument cable damaged or binding the scale?
6. Is there any debris or material build-up under or around the platform that could prevent the platform from moving freely?
7. Visually inspect the load cells and leveling feet for signs of unusual wear.
8. Check repeatability and shift of the scale.

6 Troubleshooting

General

If the scale does not operate properly, find out as much about the problem as possible. Try to determine whether the problem is constant or intermittent. Mechanical and electrical influences can cause malfunctions, so be patient and use sound logic when troubleshooting.

When troubleshooting a 2256 VLC floor scale, examine the scale's physical location. Check for the presence of water, corrosive materials, unlevel floors, high vibrations, air currents, or physical damage to the scale platform or frame. Also check the instrument cable for damage, and check all connections for loose or improper wiring.

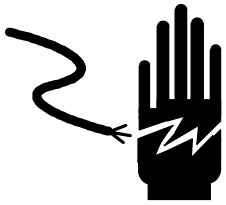

⚠ WARNING

PERMIT ONLY QUALIFIED PERSONNEL TO SERVICE THIS EQUIPMENT. EXERCISE CARE WHEN MAKING CHECKS, TESTS, AND ADJUSTMENTS THAT MUST BE MADE WITH POWER ON. FAILING TO OBSERVE THESE PRECAUTIONS CAN RESULT IN BODILY HARM.

⚠ CAUTION

BEFORE CONNECTING/DISCONNECTING ANY INTERNAL ELECTRONIC COMPONENTS OR INTERCONNECTING WIRING BETWEEN ELECTRONIC EQUIPMENT, ALWAYS REMOVE POWER AND WAIT AT LEAST THIRTY (30) SECONDS. FAILURE TO OBSERVE THESE PRECAUTIONS COULD RESULT IN BODILY HARM OR DAMAGE TO OR DESTRUCTION OF THE EQUIPMENT.

Isolate the Problem

Determine whether the problem is in the scale or the indicator.

1. Remove power from the system, and then disconnect the indicator from the scale.
2. Connect the indicator to a load cell simulator (analog simulator available from METTLER TOLEDO).
3. Reapply power and test the indicator. If the problem persists, consult the indicator manual for further troubleshooting assistance.
4. If the problem is NOT present with the load cell simulator attached to the indicator, remove power, disconnect the simulator, and reconnect the scale. If the problem persists, continue troubleshooting the scale.

Check Wiring

1. Remove power from the system.
2. Remove the access cover plate from the scale platform.
3. Remove the lid from the junction box and check the interior for moisture and foreign material.
4. Make sure that all wiring connections are tight and that no insulation material is touching the terminal contacts.
5. Check all cable connections to make sure they are wired correctly. The wiring color codes are given in Table 6-1:

Load Cell Wiring		Instrument Cable Wiring*	
Function	**Color**	**Function**	**Color**
+Excitation	Green	+Excitation	White
+Sense	Not Used	+Sense	Yellow
+Signal	White	+Signal	Green
Shield	Yellow	Shield	Orange
-Signal	Red	-Signal	Black
-Sense	Not Used	-Sense	Red
-Excitation	Black	-Excitation	Blue
*Instrument cable color code based on METTLER TOLEDO cable no. 510624370			

Table 6-1: Load Cell Wiring Color Codes

6. Check all cable connectors and cord grip caps on the junction box.
7. Tighten any loose connectors.

Check Load Cells

1. Remove power from the system. Fully disconnect each load cell and check for proper input/output resistances (see Table 6-2).

NOTE: The information in this section is for 3-mV/V load cells.

Measuring Points	Resistance
Any lead to shield or ground	Infinity
+Exc (Green) to -Exc (Black)	350 ohms minimum
+Sig (White) to -Sig (Red)	350 ohms

Table 6-2: Load Cell Measuring Points

2. If resistance is within specification, perform a shorted-signal symmetry test.
   - Short the signal leads together and place one multimeter lead on the shorted signals and one lead on the +Excitation wire. Note the resistance value.
   - Remove the lead from the +Excitation wire and place it on the -Excitation wire. The two resistance values should be approximately equal.
3. If the load cells pass the shorted-signal test, reconnect them and reapply power to the scale. Confirm that the proper excitation voltage is reaching the load cells by placing multimeter leads on the excitation positions of each load cell terminal.
4. If proper excitation voltage is reaching the load cells, check the output signal from each cell by disconnecting the signal leads and measuring voltage output. If one cell has a particularly high or low dead-load output, it is suspect. The maximum output possible from any cell is 45 mV at 15 VDC excitation and loaded to gross capacity.
5. If any load cell has an unusual signal, remove all load from that cell by raising the platform.

NOTE: Remove signal leads from terminals to measure output.

   - With the power on, measure the output from the suspect load cell. The no-load zero output should be ± 1.5% of the full scale output. For example, if the excitation voltage is 15 VDC, then the full scale output would be 45 mV and the no-load zero output should be within ± 0.68 mV.
6. If a load cell fails any of the above tests, replace it.

Check Mechanical Components

Because the 2256 VLC design is so simple, there are only a few mechanical components to troubleshoot. Make sure that the platform can move freely and that there is clearance between the loading end of each load cell and the bottom of the deck. Check the following:

1. The platform should be level and should not rock.
2. Check the load cells for damage. Replace any load cells that are damaged.
3. Check the leveling feet for unusual wear. Replace any leveling feet that are unevenly worn.
4. Inspect the platform and frame for physical damage. Replace any platform or frame that is bent or has broken welds.
5. The mounting surfaces of the load cells and platform should be free of grease and other debris.

Load Cell Replacement

1. Remove power to the indicator and disconnect the instrument cable.
2. Remove the access plate from the platform to gain access to the junction box. Remove the junction box cover and locate the defective load cell terminal.
3. Disconnect the defective load cell cable from its terminal on the summing PCB.
4. Loosen the cable connector on the junction box and remove the cable from the enclosure.

NOTE: The instrument cable may need to be removed from the junction box to allow the platform to be moved.

5. Carefully position the platform on a stable surface that allows access to the defective load cell and cable, as well as offering protection to the other load cells during disassembly.
6. Attach a string to the end of the defective load cell's cable. The string should be long enough and strong enough to pull the new load cell's cable through the platform structure.

NOTE: If the load cell is mounted with 1/2-13 UNC socket-head cap screws, Use a 3/8" hex Allen socket wrench to remove the screws.

7. Remove the two 1/2-13 UNC screws that mount the load cell to the underside of the scale platform (see Figure 6-1). Keep the screws for installing the new load cell. Then lift the load cell from the mounting surface.

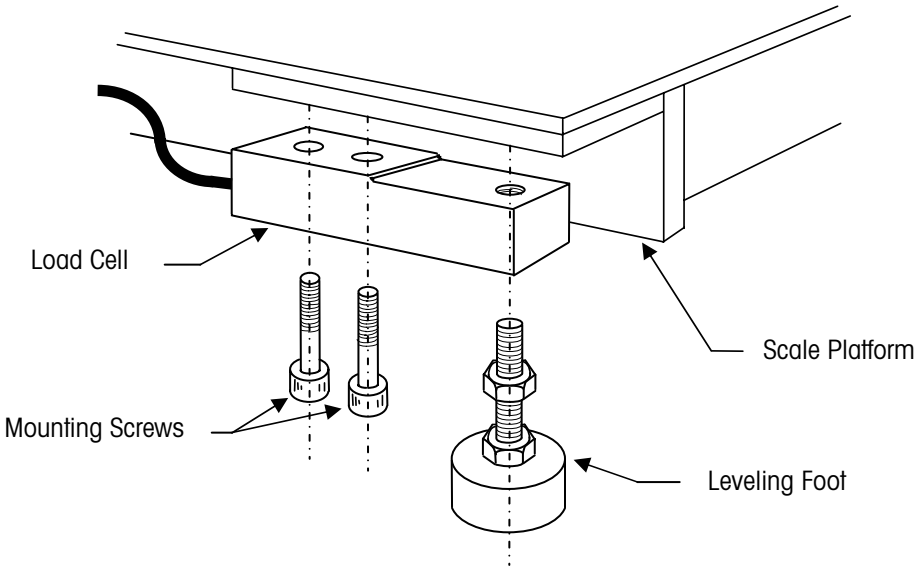

Figure 6-1: Load Cell and Leveling Foot Assembly (Corner Guard Removed)

8. Carefully pull the defective load cell's cable through the platform while feeding the string in at the junction box opening. Once the string is at the load cell location, detach it from the load cell cable.
9. Remove the leveling foot from the defective load cell. Reinstall it in the new load cell.
10. Attach the new load cell's cable to the pulling string and carefully thread it through the platform into the junction box opening. Coil any excess cable and store it within the platform's side channel.

NOTE: Make sure load cell and platform mounting surfaces are free of grease and other foreign materials.

11. Secure the new load cell to the platform. Apply an anti-seize compound such as Never-Seez to the threads of the mounting screws and tighten them with a calibrated torque wrench (75 ft-lb for stainless steel hexagonal-head screws and 100 ft-lb for Grade 8 socket-head cap screws).
12. Thread the load cell cable through the connector on the junction box. When enough cable is inside the box, tighten the connector.
13. Wire the new load cell cable to the proper terminal on the PCB according to the wiring codes shown in Chapter 3.
14. Reconnect the instrument cable and power-up the indicator. Perform a shift adjust and recalibrate the scale.

7 Service Parts

2256 VLC Floor Scale

Refer to Tables 7-1 and 7-2 when ordering parts for a current 2256 floor scale (Model 22563XXXXX-A). Model 22562XXXXX-A uses the same parts except for the leveling foot (see Table 7-3). Replacement parts for Model 22561XXXXX-A are listed in Table 7-4.

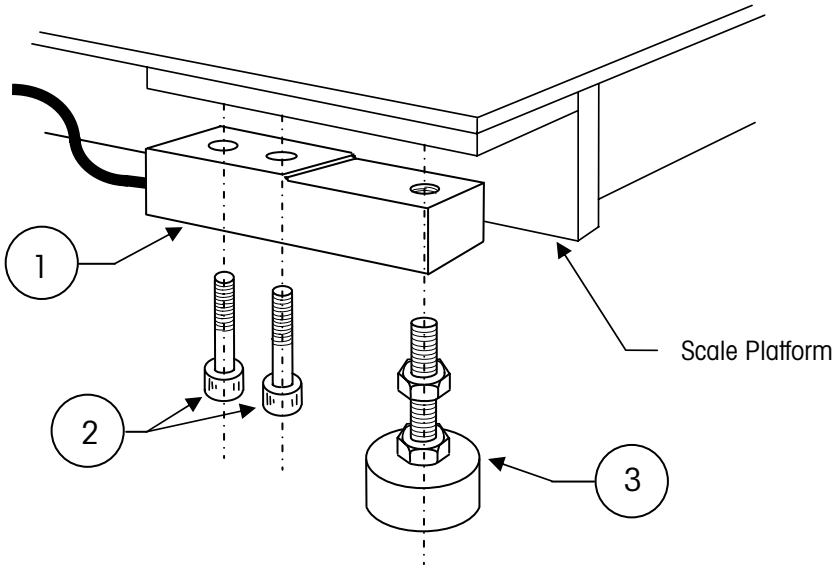

Figure 7-1: Load Cell and Leveling Foot Assembly (22563XXXXX-A)

Ref. No.	Part Number	Description	Qty.
1	TB601015-XXX*	Model 793 Load Cell, 1,000 lb (3 mV/V)	4
	TB601016-XXX*	Model 793 Load Cell, 2,500 lb (3 mV/V)	
	TB601018-XXX*	Model 793 Load Cell, 5,000 lb (3 mV/V)	
2	TN800647	1/2-13 Socket Head Cap Screw x 1.75 inches long, Black Oxide	8
	TN800648	1/2-13 Socket Head Cap Screw x 1.75 inches long, Stainless Steel	
3	TN206043-SS	Leveling Foot, Stainless Steel	4

* -XXX specifies the length of the load cell cable: -008 = 8 feet (for 36x36, 48x48, 48x60, 60x60, and 48x72 scales) and -020 = 20 feet (for 60x84 scales).

Table 7-1: Load Cell and Leveling Foot Assembly (22563XXXXX-A)

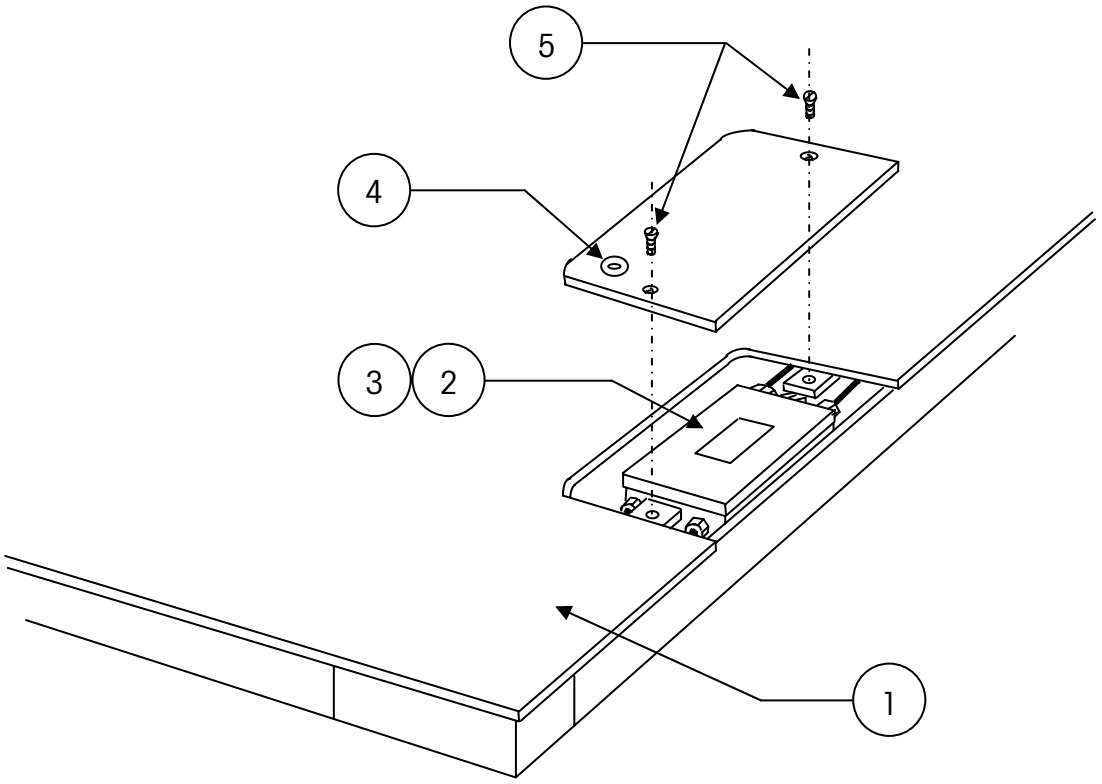

Figure 7-2: Platform and Junction Box Assembly (22563XXXXX-A)

Ref. No.	Part Number	Description	Qty.
1	TC205104-1	36-inch x 36-inch Platform, Carbon Steel (2.5K and 6K)	1
	TC205105-1	48-inch x 48-inch Platform, Carbon Steel (2.5K and 6K)	
	TC205106-1	48-inch x 48-inch Platform, Carbon Steel (10K)	
	TC205107-1	48-inch x 60-inch Platform, Carbon Steel (2.5K and 6K)	
	TC205108-1	48-inch x 60-inch Platform, Carbon Steel (10K)	
	TC205109-1	60-inch x 60-inch Platform, Carbon Steel (2.5K and 6K)	
	TC205110-1	60-inch x 60-inch Platform, Carbon Steel (10K)	
	TC205111-1	48-inch x 72-inch Platform, Carbon Steel (2.5K and 6K)	
	TC205112-1	48-inch x 72-inch Platform, Carbon Steel (10K)	
	TC205113-1	60-inch x 84-inch Platform, Carbon Steel (2.5K and 6K)	
	TC205114-1	60-inch x 84-inch Platform, Carbon Steel (10K)	
	TC205115-1	36-inch x 36-inch Platform, Stainless Steel (2.5K and 6K)	
	TC205116-1	48-inch x 48-inch Platform, Stainless Steel (2.5K and 6K)	
	TC205117-1	48-inch x 48-inch Platform, Stainless Steel (10K)	
	TC205118-1	48-inch x 60-inch Platform, Stainless Steel (2.5K and 6K)	
	TC205119-1	48-inch x 60-inch Platform, Stainless Steel (10K)	
	TC205120-1	60-inch x 60-inch Platform, Stainless Steel (2.5K and 6K)	
	TC205121-1	60-inch x 60-inch Platform, Stainless Steel (10K)	
	TC205122-1	48-inch x 72-inch Platform, Stainless Steel (2.5K and 6K)	
	TC205123-1	48-inch x 72-inch Platform, Stainless Steel (10K)	
	TC205124-1	60-inch x 84-inch Platform, Stainless Steel (2.5K and 6K)	
	TC205125-1	60-inch x 84-inch Platform, Stainless Steel (10K)	
2	TB100395	Analog Junction Box Assembly Consists of: *13640300A Analog PCB TA800218 Desiccant Bag	1
3	MZ0901010379	1/4-20 Phillips Head Screw x 1/4 inch long, Stainless Steel	4
4	TN201817	Circular Bubble Level	1
5	MZ0901010035	3/8-16 Flat Head Screw x 3/4 inch long, Stainless Steel	2

* May have an alpha prefix.

Table 7-2: Platform and Junction Box Assembly (22563XXXXX-A)

Model 22562XXXXX-A

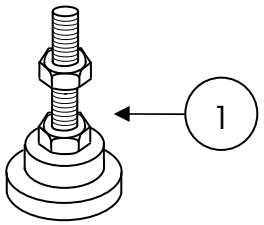

Figure 7-3: Leveling Foot (Model 22562XXXXX-A)

Ref. No.	Part Number	Description	Qty.
1	TN203980 TN203980-SS	Leveling Foot, Zinc Plated Leveling Foot, Stainless Steel	4

Table 7-3: Leveling Foot (22562XXXXX-A)

Model 22561XXXXX-A

NOTE: Reference drawing TB203366).

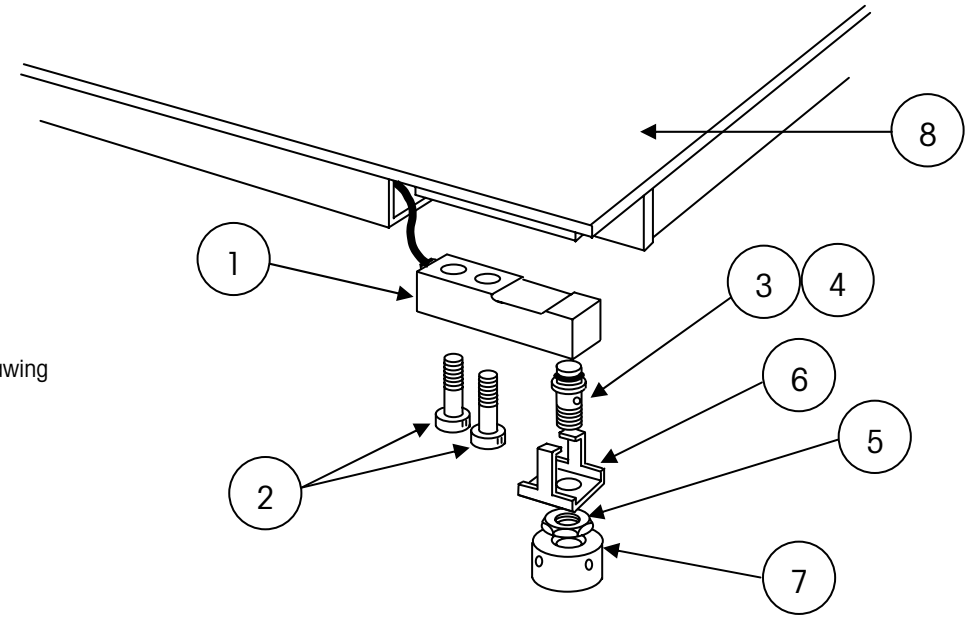

Figure 7-4: Load Cell and Leveling Foot Assembly (Model 22561XXXXX-A)

Ref. No.	Part Number	Description	Qty.
1	TB600363-1	Model 745 Load Cell, 1,250 lb (2 mV/V)	4
	TB600342-1	Model 745 Load Cell, 2,500 lb (2 mV/V)	
	TB600343-1	Model 745 Load Cell, 5,000 lb (2 mV/V)	
2	MZ0901010333	1/2-13 Socket Head Screw x 1.75 inches long	8
	MZ0901010409	1/2-13 Socket Head Screw x 2 inches long	
	MZ0901010384	1/2-13 Hex. Head Screw x 1.75 inches long, Stainless Steel	
	MZ0901010441	1/2-13 Hex. Head Screw x 2 inches long, Stainless Steel	
3	TA203345	Mounting Foot Load Pin, 3K and 6K	4
	TA203346	Mounting Foot Load Pin, 10K	
4	MZ0909000005	O-Ring	4
5	MZ0901020087	Hex. Jam Nut, 7/16-20, Stainless Steel	4
6	TA203104	Mounting Foot Retainer Clip (3K and 6K)	4
	TA203347	Mounting Foot Retainer Clip (10K)	
7	TN203103	Mounting Foot Base	4
8	TB203359-1	36-inch x 36-inch Platform, Carbon Steel (3K and 6K)	1
	TB203095	48-inch x 48-inch Platform, Carbon Steel (3K and 6K)	
	TB203417-1	48-inch x 48-inch Platform, Carbon Steel (10K)	
	TB203096	48-inch x 60-inch Platform, Carbon Steel (3K and 6K)	
	TB203418-1	48-inch x 60-inch Platform, Carbon Steel (10K)	
	TB203097	60-inch x 60-inch Platform, Carbon Steel (3K and 6K)	
	TB203331-1	60-inch x 60-inch Platform, Carbon Steel (10K)	
	TB203419-1	36-inch x 36-inch Platform, Stainless Steel (3K and 6K)	
	TB203098	48-inch x 48-inch Platform, Stainless Steel (3K and 6K)	
	TB203420-1	48-inch x 48-inch Platform, Stainless Steel (10K)	
	TB203099	48-inch x 60-inch Platform, Stainless Steel (3K and 6K)	
	TB203421-1	48-inch x 60-inch Platform, Stainless Steel (10K)	
	TB203100	60-inch x 60-inch Platform, Stainless Steel (3K and 6K)	
	TB203422-1	60-inch x 60-inch Platform, Stainless Steel (10K)	

Table 7-4: Load Cell and Leveling Foot Assembly (Model 22561XXXXX-A)

8 Reference Material

Reference Drawings

Scale Capacity	General Dimensions	Wiring Diagram
2,500 lb, 6,000 lb, 10,000 lb	TB206058	TB100505

Recommended Spare Parts

For part numbers, refer to the service parts list (Chapter 7).

Quantity	Description
1	Load cell (capacity of cell required depends on scale capacity)
1	Junction box circuit board
1	Junction box desiccant bag

METTLER TOLEDO

Publication Suggestion Report

If you have suggestions concerning this publication, please complete this form and fax it to (614) 841-7295

Publication Name: 2256 VLC WEIGHT-PLATE Analog Floor Scale Installation and Service Manual

Publication Part Number: D14914100A **Publication Date: 8/04**

PROBLEM(S) TYPE:	DESCRIBE PROBLEM(S):	*INTERNAL USE ONLY*
☐ **Technical Accuracy**	☐ **Text** ☐ **Illustration**	
☐ **Completeness** What information is missing?	☐ **Procedure/step** ☐ **Illustration** ☐ **Definition** ☐ **Example** ☐ **Guideline** ☐ **Feature** ☐ **Explanation** ☐ **Other (please explain below)**	☐ *Information in manual* ☐ *Information not in manual*
☐ **Clarity** What is not clear?		
☐ **Sequence** What is not in the right order?		
☐ **Other Comments** Use another sheet for additional comments.		

Your Name: _____ **Location:** _____

Phone Number: ( ) _____

Fax this completed form to METTLER TOLEDO at (614) 841-7295

METTLER TOLEDO
1900 Polaris Parkway
Columbus, Ohio 43240 USA

P/N: D14914100A

(8/04).00

METTLER TOLEDO® is a registered trademark of Mettler-Toledo, Inc.
© 2004 Mettler-Toledo, Inc.
Printed in USA

D□□□□□□□□□

Installation Manual

IND570

Weighing Terminal



METTLER TOLEDO

IND570 Weighing Terminal

METTLER TOLEDO Service

Essential Services for Dependable Performance of Your IND570 Weighing Terminal

Congratulations on choosing the quality and precision of METTLER TOLEDO. Proper use of your new equipment according to this Manual and regular calibration and maintenance by our factory-trained service team ensures dependable and accurate operation, protecting your investment. Contact us about a service agreement tailored to your needs and budget. Further information is available at www.mt.com/service.

There are several important ways to ensure you maximize the performance of your investment:

1. **Register your product**: We invite you to register your product at www.mt.com/productregistration so we can contact you about enhancements, updates and important notifications concerning your product.
2. **Contact METTLER TOLEDO for service**: The value of a measurement is proportional to its accuracy – an out of specification scale can diminish quality, reduce profits and increase liability. Timely service from METTLER TOLEDO will ensure accuracy and optimize uptime and equipment life.
    a. **Installation, Configuration, Integration and Training**: Our service representatives are factory-trained, weighing equipment experts. We make certain that your weighing equipment is ready for production in a cost effective and timely fashion and that personnel are trained for success.
    b. **Initial Calibration Documentation**: The installation environment and application requirements are unique for every industrial scale so performance must be tested and certified. Our calibration services and certificates document accuracy to ensure production quality and provide a quality system record of performance.
    c. **Periodic Calibration Maintenance**: A Calibration Service Agreement provides on-going confidence in your weighing process and documentation of compliance with requirements. We offer a variety of service plans that are scheduled to meet your needs and designed to fit your budget.
    d. **GWP® Verification**: A risk-based approach for managing weighing equipment allows for control and improvement of the entire measuring process, which ensures reproducible product quality and minimizes process costs. GWP (Good Weighing Practice), the science-based standard for efficient life-cycle management of weighing equipment, gives clear answers about how to specify, calibrate and ensure accuracy of weighing equipment, independent of make or brand.
    e. **InTouchSM Remote Services**: Confidently and securely improve the performance and uptime of your weighing systems, with InTouch Remote Service, only available from METTLER TOLEDO. Working within your existing IT security policies, IND570 with embedded InTouch connectivity actively monitors system performance. Proactive alerts to remote service technicians allow a real-time response to performance issues, increasing uptime, overall asset utilization and reduction of unforeseen expenses.

© METTLER TOLEDO 2015

No part of this manual may be reproduced or transmitted in any form or by any means, electronic or mechanical, including photocopying and recording, for any purpose without the express written permission of METTLER TOLEDO.

U.S. Government Restricted Rights: This documentation is furnished with Restricted Rights.

Copyright 2015 METTLER TOLEDO. This documentation contains proprietary information of METTLER TOLEDO. It may not be copied in whole or in part without the express written consent of METTLER TOLEDO.

METTLER TOLEDO reserves the right to make refinements or changes to the product or manual without notice.

COPYRIGHT

METTLER TOLEDO® is a registered trademark of Mettler-Toledo, LLC. All other brand or product names are trademarks or registered trademarks of their respective companies.

METTLER TOLEDO RESERVES THE RIGHT TO MAKE REFINEMENTS OR CHANGES WITHOUT NOTICE.

FCC Notice

This device complies with Part 15 of the FCC Rules and the Radio Interference Requirements of the Canadian Department of Communications. Operation is subject to the following conditions: (1) this device may not cause harmful interference, and (2) this device must accept any interference received, including interference that may cause undesired operation.

This equipment has been tested and found to comply with the limits for a Class A digital device, pursuant to Part 15 of FCC Rules. These limits are designed to provide reasonable protection against harmful interference when the equipment is operated in a commercial environment. This equipment generates, uses, and can radiate radio frequency energy and, if not installed and used in accordance with the instruction manual, may cause harmful interference to radio communications. Operation of this equipment in a residential area is likely to cause harmful interference in which case the user will be required to correct the interference at his or her expense.

- Declaration of Conformity is located on the documentation CD.

RoHS Compliance Statement.

- The majority of our products fall within categories 8 and 9. Those categories currently do not fall within the scope of the Directive 2002/95/EG (RoHS) of January 27, 2003. If our products are intended for use in other products which themselves fall within the scope of the RoHS Directive, compliance requirements have to be separately negotiated contractually.
- Those products which fall within categories 1-7 and 10 will be in compliance with the EU RoHS Directive from no later than July 1, 2006.
- If it is not possible for technical reasons to replace any non-RoHS-compliant substances in any of the above products as required, we plan to inform our customers in a timely manner

Statement Regarding Harmful Substances

We do not make direct use of harmful materials such as asbestos, radioactive substances or arsenic compounds. However, we purchase components from third party suppliers, which may contain some of these substances in very small quantities.

Safety Warnings and Cautions

- READ this manual BEFORE operating or servicing this equipment. FOLLOW these instructions carefully.
- SAVE this manual for future reference.

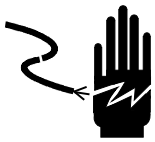

⚠ WARNING

FOR CONTINUED PROTECTION AGAINST SHOCK HAZARD CONNECT THE TERMINAL TO PROPERLY GROUNDED OUTLET ONLY. DO NOT REMOVE THE GROUND PRONG.



⚠ WARNING

ONLY PERMIT QUALIFIED PERSONNEL TO SERVICE THE TERMINAL. EXERCISE CARE WHEN MAKING CHECKS, TESTS AND ADJUSTMENTS THAT MUST BE MADE WITH POWER ON. FAILING TO OBSERVE THESE PRECAUTIONS CAN RESULT IN BODILY HARM AND/OR PROPERTY DAMAGE.



⚠ WARNING

DO NOT INSTALL, DISCONNECT OR PERFORM ANY SERVICE ON THIS EQUIPMENT BEFORE POWER HAS BEEN SWITCHED OFF AND THE AREA HAS BEEN SECURED AS NON-HAZARDOUS BY PERSONNEL AUTHORIZED TO DO SO BY THE RESPONSIBLE PERSON ON-SITE.



⚠ WARNING

NOT ALL VERSIONS OF IND570 ARE DESIGNED FOR USE IN HAZARDOUS (EXPLOSIVE) AREAS. REFER TO THE DATA PLATE OF THE IND570 TO DETERMINE IF A SPECIFIC TERMINAL IS APPROVED FOR USE IN AN AREA CLASSIFIED AS HAZARDOUS BECAUSE OF COMBUSTIBLE OR EXPLOSIVE ATMOSPHERES. TERMINALS THAT ARE NOT FACTORY LABELED AS DIVISION 2 OR EUROPEAN CATEGORY 3 APPROVED MUST NOT BE INSTALLED IN A DIVISION 2 OR ZONE 2/22 ENVIRONMENT.



⚠ WARNING

THE INTERNAL DISCRETE I/O RELAY OPTIONS MUST NOT BE USED IN AREAS CLASSIFIED AS HAZARDOUS BECAUSE OF COMBUSTIBLE OR EXPLOSIVE ATMOSPHERES. FAILURE TO COMPLY WITH THIS WARNING COULD RESULT IN BODILY HARM AND/OR PROPERTY DAMAGE.

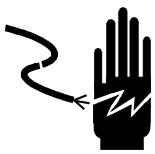

⚠ WARNING

WHEN THIS EQUIPMENT IS INCLUDED AS A COMPONENT PART OF A SYSTEM, THE RESULTING DESIGN MUST BE REVIEWED BY QUALIFIED PERSONNEL WHO ARE FAMILIAR WITH THE CONSTRUCTION AND OPERATION OF ALL COMPONENTS IN THE SYSTEM AND THE POTENTIAL HAZARDS INVOLVED. FAILURE TO OBSERVE THIS PRECAUTION COULD RESULT IN BODILY HARM AND/OR PROPERTY DAMAGE.

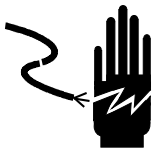

⚠ WARNING

ONLY THE COMPONENTS SPECIFIED ON THE IND570 DOCUMENTATION CD CAN BE USED IN THIS TERMINAL. ALL EQUIPMENT MUST BE INSTALLED IN ACCORDANCE WITH THE INSTALLATION INSTRUCTIONS DETAILED IN THE INSTALLATION MANUAL. INCORRECT OR SUBSTITUTE COMPONENTS AND/OR DEVIATION FROM THESE INSTRUCTIONS CAN IMPAIR THE SAFETY OF THE TERMINAL AND COULD RESULT IN BODILY HARM AND/OR PROPERTY DAMAGE.



⚠ CAUTION

BEFORE CONNECTING/DISCONNECTING ANY INTERNAL ELECTRONIC COMPONENTS OR INTERCONNECTING WIRING BETWEEN ELECTRONIC EQUIPMENT ALWAYS REMOVE POWER AND WAIT AT LEAST THIRTY (30) SECONDS BEFORE ANY CONNECTIONS OR DISCONNECTIONS ARE MADE. FAILURE TO OBSERVE THESE PRECAUTIONS COULD RESULT IN DAMAGE TO OR DESTRUCTION OF THE EQUIPMENT AND/OR BODILY HARM.



NOTICE

OBSERVE PRECAUTIONS FOR HANDLING ELECTROSTATIC SENSITIVE DEVICES.

Disposal of Electrical and Electronic Equipment

In conformance with the European Directive 2002/96/EC on Waste Electrical and Electronic Equipment (WEEE) this device may not be disposed of in domestic waste. This also applies to countries outside the EU, per their specific requirements.



Please dispose of this product in accordance with local regulations at the collecting point specified for electrical and electronic equipment.

If you have any questions, please contact the responsible authority or the distributor from which you purchased this device.

Should this device be passed on to other parties (for private or professional use), the content of this regulation must also be related.

Thank you for your contribution to environmental protection.

Contents

1 Introduction 1-1

1.1. IND570 Overview 1-2

1.1.1. Versions 1-2

1.1.2. Standard IND570 Features 1-2

1.2. Specifications 1-4

1.3. Inspection and Contents Checklist 1-6

1.4. Model Identification 1-7

1.5. Physical Dimensions 1-8

1.6. Main PCB 1-9

1.7. Scale Bases 1-10

1.8. Options 1-10

1.8.1. Discrete I/O 1-10

1.8.2. Ethernet Option 1-11

1.8.3. COM2/COM3 Serial Ports 1-11

1.8.4. PLC Interfaces 1-12

1.8.5. TaskExpert™ 1-14

1.8.6. InSite™ SL Configuration Tool 1-14

1.9. Display and Keyboard 1-15

1.9.1. Display Layout 1-15

1.9.2. Front Panel Keys 1-16

2 Installation 2-1

2.1. Opening and Closing Enclosures 2-2

2.1.1. Panel-Mount Enclosure 2-2

2.1.2. Harsh Enclosure 2-2

2.2. Environmental Protection 2-4

2.3. Mounting the Terminal 2-5

2.3.1. Panel-Mount Enclosure 2-5

2.3.2. Harsh Enclosure 2-6

2.4. Installing Cables and Connectors 2-10

2.4.1. Ferrites 2-10

2.4.2. Harsh Enclosure Cable Openings 2-11

2.4.3. Harsh Enclosure Cable Glands 2-11

2.4.4. External USB Adapter 2-13

2.4.5. Main Board Wiring Connections 2-14

2.4.6. Wiring Connections for Options 2-20

2.5. PCB Switch Settings 2-33

2.5.1. Main PCB Switches 2-33

2.6. PCB Jumper Positions 2-34

2.6.1. Main PCB Jumper 2-34

2.7. Scale Capacity and Increment Display Options 2-35
2.7.1. Metrology Line 2-35
2.7.2. Capacity Label Instructions 2-36
2.8. Sealing the Enclosure 2-37
2.8.1. External Sealing of the Panel-Mount Enclosure 2-37
2.8.2. External Sealing of the Harsh Enclosure 2-38

1 Introduction

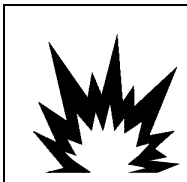

⚠ WARNING!

NOT ALL VERSIONS OF THE IND570 ARE DESIGNED FOR USE IN HAZARDOUS (EXPLOSIVE) AREAS. REFER TO THE DATA PLATE OF THE IND570 TO DETERMINE IF A SPECIFIC TERMINAL IS APPROVED FOR USE IN AN AREA CLASSIFIED AS HAZARDOUS BECAUSE OF COMBUSTIBLE OR EXPLOSIVE ATMOSPHERES.

This chapter covers
- IND570 Overview
- IND570 Terminal Versions
- Specifications
- Safe Disposal Requirement
- Model Identification
- Physical Dimensions
- Interfaces and Options
- Display and Keyboard

The IND570 represents the latest in METTLER TOLEDO technology and is one of the most versatile weighing terminals available today. Choose from conventional strain gauge or high-precision electromagnetic force restoration weighing technologies. Specify direct PLC or PC communication interfaces or digital I/O control. Combine these selections with the option of panel or desk/wall/column-mounting, and the IND570 is the perfect match for nearly any industrial weighing application, including:

- Basic Weighing
- Filling and Blending
- Drum filling
- Shipping and Receiving
- In-Motion Weighing
- Dosing
- Over/Under Checkweighing
- Vehicle Weighing

Enhance measurement or control applications with an ultra-fast A/D conversion rate of 366 Hz, patented TraxDSP™ digital filtering technology, and an I/O bus update rate of 50 Hz. The IND570 delivers precision measurement data from milligrams to tons in a single cost effective package that easily integrates into existing systems.

The versatile IND570 excels in controlling simple filling and dosing applications delivering best-in-class performance for fast, precise, accurate results in manual, semi-automatic, or fully automatic operations. Utilize the control capabilities of the IND570 to effectively manage project costs. Control up to 20 digital outputs through the IND570 without intervention from a PLC. Target control outputs can be latched, eliminating the need for external logic devices.

For more advanced filling, the Fill-570 Application Software adds additional sequences and component inputs. Without complex and costly programming, quickly configure the Fill-570 advanced filling software, creating custom filling and dosing sequences along with blending applications for up to 6 materials that cue operators and track process data, ultimately supporting efficiency, quality and safety.

Whether communicating weight data to a PLC or providing an easier way to perform terminal configuration, the IND570 offers multiple connectivity options to improve applications.

Direct PLC connectivity is available using 4-20mA Analog Output, PROFIBUS DP, DeviceNet, ControlNet, EtherNet/IP or Modbus TCP protocols. Interfaces are also available for serial data via RS-232/422/485 and Ethernet TCP/IP networking. A standard USB Host interface provides the ability to

connect a QWERTY keyboard for operator input, upgrade terminal firmware, perform a save/restore of terminal configuration and quickly import and export a variety of data tables and reports.

1.1. IND570 Overview

1.1.1. Versions

The IND570 is available in the following versions:

1.1.1.1. AC Powered Models (85-264VAC)

- Harsh enclosure with analog load cell connection
- Harsh enclosure with high-precision (IDNet) base connection
- Panel-mount enclosure with analog load cell connection
- Panel-mount enclosure with high-precision (IDNet) base connection

1.1.1.2. 24VDC Powered Models

- Panel-mount enclosure with analog load cell connection
- Panel-mount enclosure with high-precision (IDNet) base connection

1.1.2. Standard IND570 Features

- Basic weighing terminal for use in safe areas (IND570 models)
- Panel-mount or harsh environment desk/wall/column-mount enclosures
- Connect one analog load cell scale base, or a network of up to 12 350 ohm load cells, or a single high-precision IDNet base
- Multiple range and multiple interval weighing
- 256 x 128 dot-matrix graphic OLED display with 25 mm-high weight display
- Display, receipt and transmission of information in multiple languages
- USB host port for connection of external keyboard, USB memory device or barcode scanner
- One serial port for asynchronous, bidirectional communication and print output
- Operation as a Remote Display for another terminal
- Real-time clock with battery backup
- 85–264 VAC power input range
- Basic weighing functions including zero, tare, and printing
- Selectable over/under classifying mode of operation
- Selectable material transfer mode of operation for simple filling or dosing
- SmartTrac™ graphical display
- ID mode for prompted transaction sequencing and data collection
- Tracking of material delivery rate

- Comparators – simple coincidence set points for comparison of weight or rate with absolute target values or ranges
- Two standard memory tables for Tare and Target storage – 99 Tare records and 200 Target records
- Unit switching between three different units, including a custom unit
- Alibi memory storage for up to 100,000 records
- Grand total and subtotal registers for accumulating weight
- Ten customizable print templates
- Report printing
- TraxDSP™ digital filtering for analog load cells
- TraxEMT™ performance monitoring and recording
- CalFree™ calibration without test weights
- Routine verification of system accuracy by utilizing Test Manager GWP® (Good Weighing Practice)
- MinWeigh™ to eliminate measurement uncertainties
- Support for the following communication options:
  - Ethernet TCP/IP
  - Additional serial ports
  - Relay based discrete I/O interfaces
  - Analog output
  - ControlNet
  - DeviceNet™
  - EtherNet/IP
  - Modbus TCP
  - PROFIBUS® DP
- Support for the following optional Application Software Modules:

  Fill-570 Drive-570 COM-570

- Support for TaskExpert™ custom application development software

1.2. Specifications

The IND570 terminal conforms to the specifications listed in Table 1-1.

Table 1-1: IND570 Specifications

IND570 Specifications	
Enclosure Type	Panel-mount stainless steel front panel with an aluminum frame
	Harsh environment desk/wall/column-mount type 304L stainless steel enclosure
Dimensions (l × w × d)	Panel Mount: 265 mm × 160 mm × 66.5 mm (10.4 in. × 6.3 in. × 2.6 in.)
	Harsh Environment: 265 mm × 148.4 mm × 163 mm (10.4 in. × 5.8 in. × 6.4 in.)
Shipping Weight	3.2 kg (7 lb)
Environmental Protection	Panel-mount front panel sealing is UL-approved, and provides type 4x and type 12 protection – comparable to IP65 rating
	Harsh Environment is UL-approved, and meets IP69K requirements
Operating Environment	The terminal (both enclosure types) can be operated at temperatures ranging from –10° to 40° C (14° to 104° F) at 10% to 95% relative humidity non-condensing.
Hazardous Areas	Not all versions of the IND570 can be operated in areas classified as Hazardous by the National Electrical Code (NEC) because of the combustible or explosive atmospheres in those areas. Contact an authorized METTLER TOLEDO representative for information about the IND570xx model for hazardous applications.
AC Input Power	Operates at 85–264 VAC, 49–61 Hz, 750 mA (both enclosure types).
	Panel-mount version provides a terminal strip for AC power connections.
	Harsh environment version includes a power cord configured for the country of use.
DC Input Power	Operates at –61 Hz, 750 mA (panel mount enclosure only)
	Panel-mount version provides a terminal strip for DC power connections.
	24VDC input power option not available on the harsh models
Scale Types & Update Rates	Analog load cells, up to Twelve 350-ohm load cells (2 or 3 mV/V). Update rate > 366 Hz or IDNet High-Precision Line (+12V versions only, including T-Brick cell, M-Cell, Point-ADC). Update rate determined by IDNet base.
Analog Load Cell Excitation Voltage	10 VDC
Minimum Sensitivity	0.1 microvolts

IND570 Specifications	
Interface and Function Update Rates (max)	Internal discrete I/O: 50 Hz; External discrete I/O (ARM100): 25 Hz; PLC cyclic data: 25 Hz; SICS Continuous: 20 Hz; MT Continuous Output: 20 Hz
Keypad	26 keys; 1.22-mm thick polyester overlay (PET) with polycarbonate display lens
Communication	**Standard Interfaces** Serial Port: COM1 (RS-232/RS-422/RS-485), 300 to 115,200 baud USB Host Port: Type A connector, +5V at 100mA for connected devices **Optional Interfaces** Ethernet Port: Ethernet 10 Base-T COM2 & COM3 serial ports: RS-232/RS-422/RS-485, 300 to 115,200 baud **Supported Protocols** USB Inputs: ASCII characters (barcode, keyboard), file import USB Outputs: Demand outputs, Report printing, file export Serial Inputs: ASCII characters, ASCII commands for CTPZ (Clear, Tare, Print, Zero), SICS (level 0 and level 1, some support for level 2 commands), Remote Display Serial Outputs: Continuous and Demand outputs, SICS host protocol, report printing, interfaces with external ARM100 Remote Input/Output modules. Optional COM-570 Application Software available for legacy serial protocols. Ethernet Inputs: ASCII commands for CTPZ (Clear, Tare, Print, Zero), SICS (level 0 and level 1, some support for level 2 commands), Remote Display Ethernet Outputs: Continuous and Demand Outputs, report printing, SICS host protocol **PLC Interfaces** A single interface supported: Analog output, ControlNet, DeviceNet™, EtherNet/IP, Modbus TCP, PROFIBUS® DP
Approvals	**Weights and Measures** USA: NTEP Class II 100,000d; Class III/IIIL 10,000d; CoC #13-123 Canada: Class II 100,000d; Class III 10,000d; Class IIIHD, 20,000d; AM-5933 Europe: OIML R76 Class II approved divisions determined by platform; Class III and IIII 10,000e; TC8458 **Product Safety** UL, cUL, CE

1.3. Inspection and Contents Checklist

Verify the contents and inspect the package immediately upon delivery. If the shipping container is damaged, check for internal damage and file a freight claim with the carrier if necessary. If the container is not damaged, remove the IND570 terminal from its protective package, noting how it was packed, and inspect each component for damage.

If shipping the terminal is required, it is best to use the original shipping container. The IND570 terminal must be packed correctly to ensure its safe transportation.

The package should include:

- IND570 terminal
- Safety warnings in multiple languages
- Documentation CD (includes all manuals, PLC sample codes, Certificate of Conformance)
- Bag of parts for installation. Depending on terminal, may include ferrites, grommets, rubber feet., etc.

1.4. Model Identification

The IND570 model number is located on the data plate on the back of the terminal along with the serial number. Refer to Figure 1-1 to verify the IND570 that was ordered.

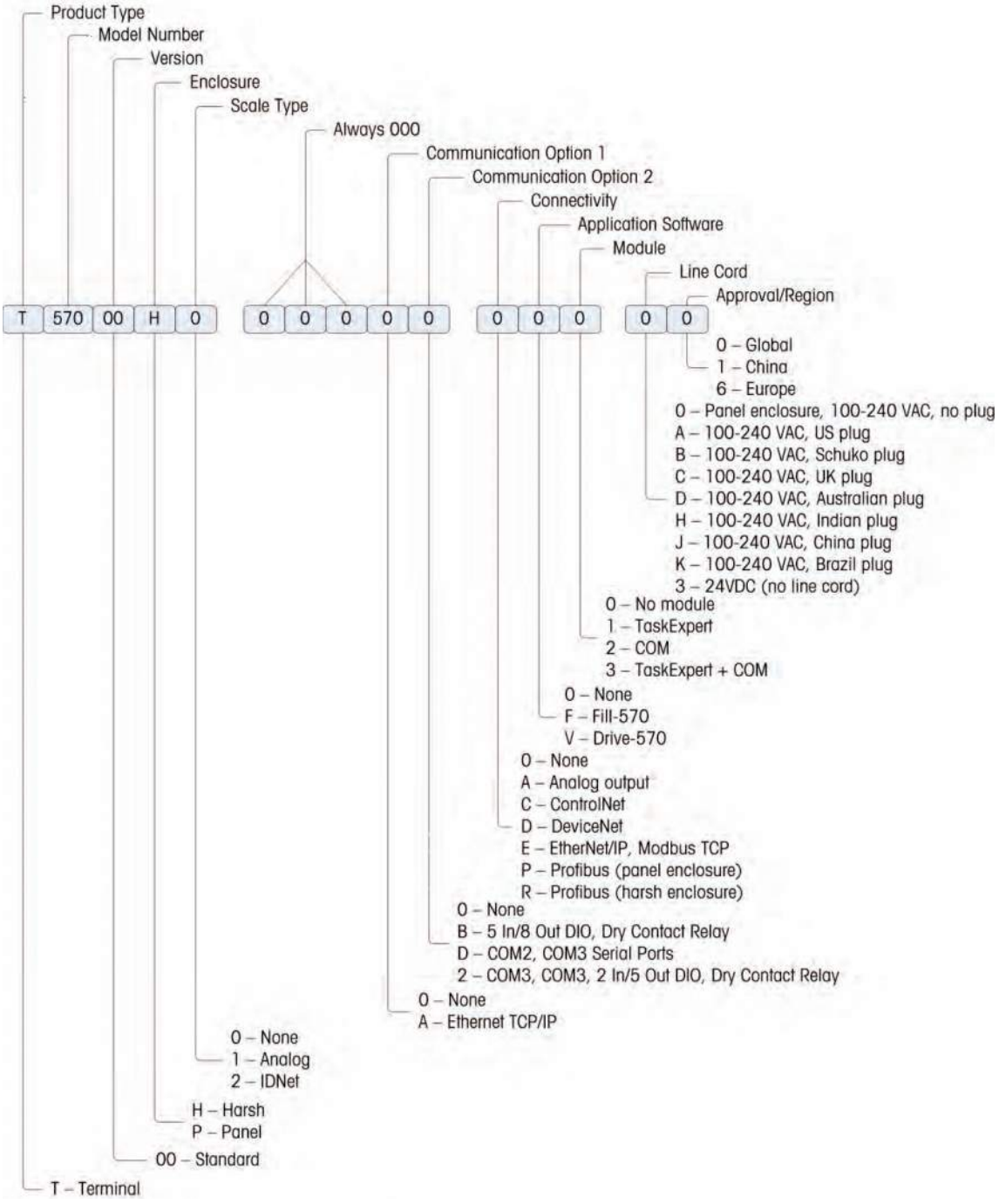

Figure 1-1: IND570 Model Identification Numbers

1.5. Physical Dimensions

The physical dimensions of the Panel Mount IND570 enclosure are shown in Figure 1-2 in millimeters and [inches]. Figure 1-3 shows the dimensions of the cutout required for the Panel Mount enclosure.

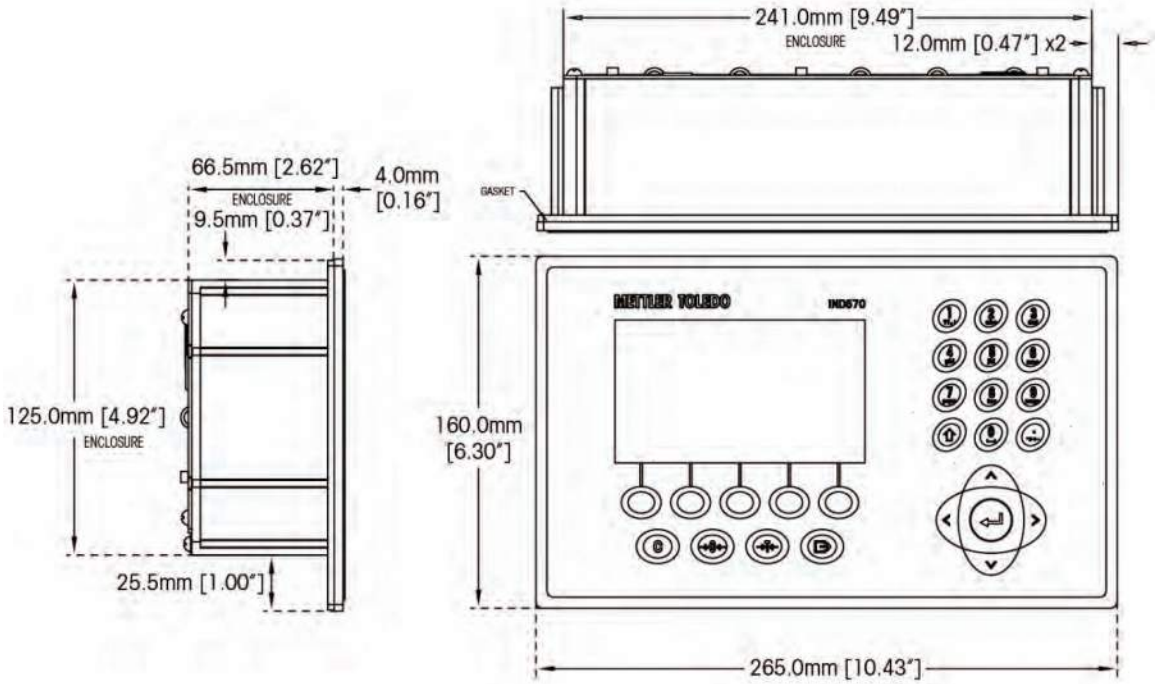

Figure 1-2: IND570 Panel Mount Enclosure Dimensions

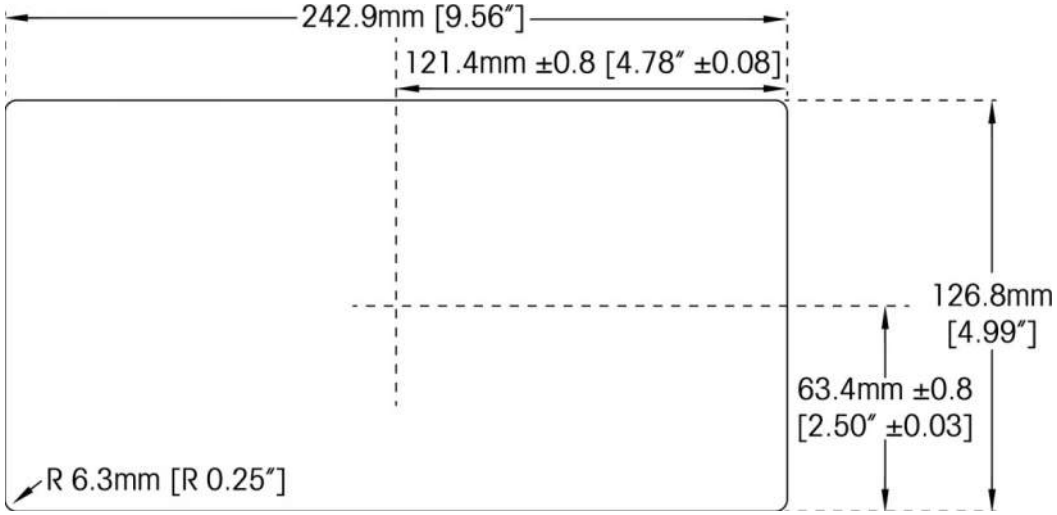

Figure 1-3: IND570 Panel Mount Cutout Dimensions

The dimensions of the harsh enclosure desk/wall-mount IND570 terminal are shown in Figure 1-4 and Figure 1-5 in millimeters and [inches].

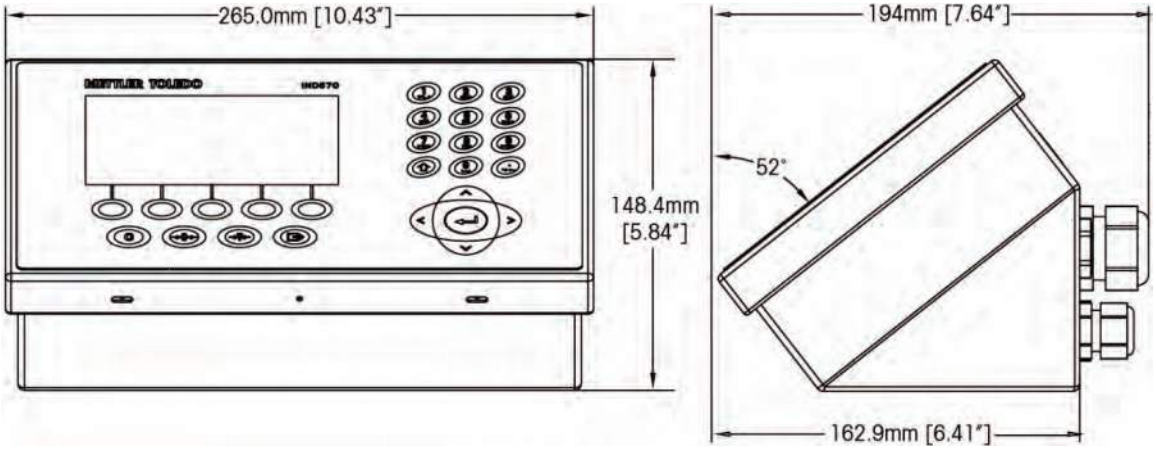

Figure 1-4: Harsh Environment Enclosure Dimensions

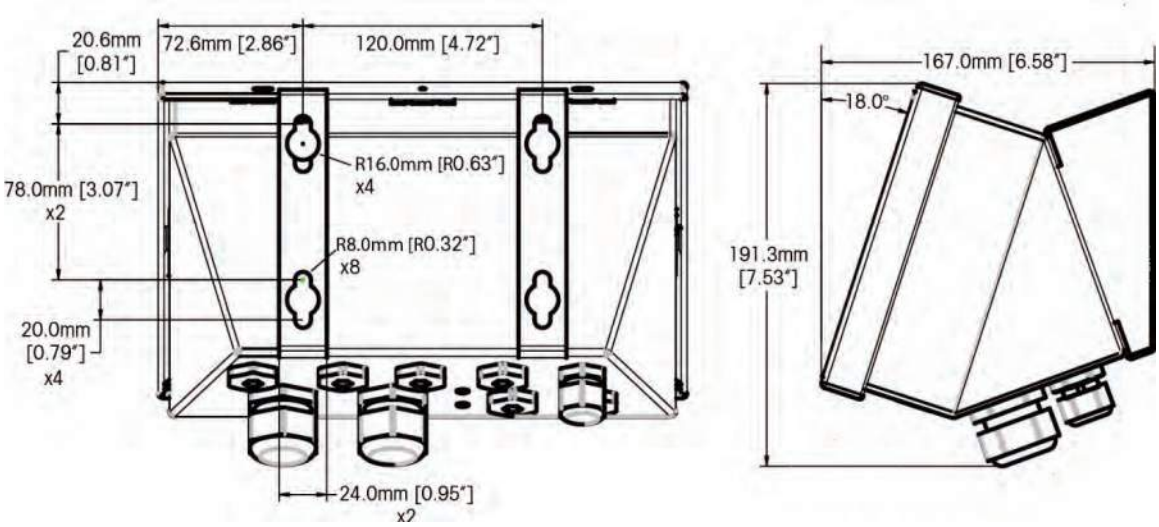

Figure 1-5: Harsh Environment Enclosure Dimensions with Optional Brackets

1.6. Main PCB

The IND570 terminal's main printed circuit board (PCB) provides the scale interface for analog load cell(s) or IDNet.

The main board also contains the USB Host port for connection of an external keyboard or barcode scanner for data entry or a USB memory device that can be used for data collection, file transfer and system backup.

A single standard serial port (COM1) is located on the main board and provides RS-232, RS-422, or RS-485 communication. The COM1 port is bidirectional and can be configured for various functions such as demand output, remote display, SICS host communications, continuous output, ASCII command input (C, T, P, Z), ASCII character input, report printing, totals printing, or connection to an ARM100 remote I/O module.

The main board also contains an input from the AC (or DC) power supply, front panel keyboard interface, and bus connectors for the option boards.

1.7. Scale Bases

The IND570 supports two types of scales: Analog or IDNet.

1.7.1.1. Analog Load Cell Scale

The IND570 main PCB includes an analog load cell interface. The terminal can drive up to twelve 350-ohm analog load cells.

1.7.1.2. IDNet™ Scale Base

The IND570 supports an IDNet scale through a PCB interface that connects to a unique bus on the main board. This interface supports the newer T-brick style of high-precision base through the IDNet scale card. The port provides the +12 volts and communication required to operate this newer style base. The interface also supports M-Cell and Point-ADC. The older K module and Pik-brick cells require +32 volts and are not supported by the IND570.

1.8. Options

The following hardware and software options are available for the IND570:

- Discrete I/O
  - Internal, high-level discrete I/O
  - Remote discrete I/O via ARM100 module
- COM2/COM3 Serial Ports
- Ethernet TCP/IP Port
- Programmable Logic Control (PLC) interfaces, including:
  - Analog Output
  - DeviceNet™
  - Modbus TCP
  - PROFIBUS® DP
  - EtherNet/IP™
  - ControlNet™
- Fill-570 application software
- Drive-570 application software
- COM-570 application software
- TaskExpert™ custom application development software
- Various brackets for wall and column mounting of the harsh enclosure
- InSite™ SL Configuration Tool (PC based software for backup and restore)

1.8.1. Discrete I/O

The discrete I/O interface options include both internal and remote I/O. Only one internal discrete I/O can be used at a time.

- An internal DIO option is available with 5 inputs and 8 outputs. Each output will switch up to 30 volts DC or 250 volts AC up to 1 amp of current. The inputs are switch-selectable as either active (for simple pushbutton control) or passive (for connection to PLCs or other devices that supply their own power for the I/O).
- Another internal DIO/serial port option is available with 2 inputs, 8 outputs and the COM2 and COM3 serial ports. Each output will switch up to 30 volts DC or 250 volts AC up to 1 amp of current. The inputs are switch-selectable as either active (for simple pushbutton control) or passive (for connection to PLCs or other devices that supply their own power for the I/O).
- Remote I/O function is supported by the ARM100 remote I/O module. This module provides only dry-contact outputs. The ARM100's inputs are passive. An external 10 to 32 VDC power supply is required to operate the ARM100. Either the COM1 or COM3 serial port is required for communication with an ARM100 module.
  - The COM3 serial port is available on the COM2/COM3 option or the COM2/COM3/DIO combination option.
- A maximum of 13 inputs and 20 outputs are supported (5 Inputs/8 Outputs local I/O option, and two ARM100 remote I/O modules).



⚠ WARNING

THE INTERNAL DISCRETE I/O DRY CONTACT RELAY OPTIONS MUST NOT BE USED IN AREAS CLASSIFIED AS HAZARDOUS DUE TO THE PRESENCE OF COMBUSTIBLE OR EXPLOSIVE ATMOSPHERES. FAILURE TO COMPLY WITH THIS WARNING COULD RESULT IN BODILY HARM AND/OR PROPERTY DAMAGE.

1.8.2. Ethernet Option

The Ethernet option provides a TCP/IP port that can be used to transmit demand templates, continuous data, for direct access to data via a shared data server, to send email alerts and terminal status information, and FTP transfer of tare and target tables and complete setup files. It also provides a connection for backup and restore of the terminal's configuration using the METTLER TOLEDO InSite™ SL program.

The Ethernet port offers access to the IND570 Webserver via a customer's local network.

1.8.3. COM2/COM3 Serial Ports

Options for additional serial ports include a stand-alone COM2/COM3 option and COM2/COM3 bundled with discrete I/O. Only one option can be used at a time.

COM2 supports an RS-232 connection at communication rates from 300 to 115.2k baud.

COM3 supports an RS-232, RS-422, or RS-485 connection at communication rates from 300 to 115.2k baud.

The serial/discrete I/O combination option includes 2 discrete inputs and 5 discrete outputs. Each output will switch up to 30 volts DC or 250 AC up to 1 amp of current. The inputs are switch-selectable as either active (for simple pushbutton control) or passive (for connection to PLCs or other devices that supply their own power for the I/O).

1.8.4. PLC Interfaces

The IND570 PLC interface options include Analog Output, DeviceNet, PROFIBUS DP, EtherNet/IP, Modbus TCP and ControlNet. Only one PLC option can be used at a time.

Additional details about each of these interfaces along with programming guidance can be found in the **IND570 PLC Interface Manual**, document #30205335 provided on the documentation CD included in the terminal packaging. The **IND570 PLC Interface Manual** can also be found at www.mt.com/IND570.

1.8.4.1. Analog Output

Analog Output refers to the representation of an internal system variable using a proportional electrical signal. Analog Output can be used to transmit a measured value, such as the gross or net weight.

0-5 volt DC, 0-10 volt DC, 0-20 mA and 4-20 mA signals are provided. Only one signal can be used at a time.

1.8.4.2. ControlNet

The ControlNet option enables the IND570 terminal to communicate to ControlNet Programmable Logic Controllers (PLCs) through direct connection to the ControlNet network.

1.8.4.3. DeviceNet

The IND570 DeviceNet option enables the terminal to communicate to a DeviceNet network. DeviceNet is an RS-485 based network utilizing CAN chip technology. This network was created for bit and byte-level devices. The network can be configured to run up to 500Kbits per second depending on cabling and distances. Messages are limited to 8 unfragmented bytes. The network can include up to 64 nodes including the master, commonly called the scanner.

1.8.4.4. PROFIBUS DP

The PROFIBUS option card enables the IND570 terminal to communicate to a PROFIBUS DP master according to DIN 19 245 and programmable logic controllers such as Siemens S7 series. The IND570 PROFIBUS communication solution consists of this internally installed PCB module and software that resides in the IND570 terminal which implements the data exchange.

1.8.4.5. EtherNet/IP

This internally installed PCB module enables the IND570 terminal to communicate to EtherNet/IP Programmable Logic Controllers (PLCs) through direct connection to the EtherNet/IP network at either 10 or 100 Mbps speed. The kit consists of a backplane-compatible I/O module, mounting hardware, and a ferrite. Software to implement the data exchange resides in the IND570 terminal.

1.8.4.6. Modbus TCP

In IND570, the Modbus TCP protocol is supported by the IND570 EtherNet/IP interface option. Modbus/TCP is used to establish master-slave/client-server communication between intelligent devices. It is an open standard network protocol, widely used in the industrial manufacturing environment. The ModbusTCP protocol takes the Modbus instruction set and wraps TCP/IP around it. Application Software

1.8.4.7. Installing Application Software

The following application software modules can be added to the IND570 to provide additional functionality for specific workplaces and weighing operations.

1.8.4.8. Fill-570

The Fill-570 is a special application that can be added to the IND570 terminal to provide additional filling and dosing control. It provides control for the following filling sequences:

- Dose out to target
- Dose out with an automatic refill of supply material(s)
- Fill to target
- Fill with a dump to empty
- Blend (up to 6 materials)
- Blend (up to 6 materials) with a dump to empty

Additional features of this software include:

- Specialized discrete I/O assignments for stand-alone control of filling and dosing systems
- Storage of formulas (multiple material blends)
- As-needed scaling of formulas
- Process statistics (maximum cycle time, out of tolerance count, etc.)
- Gain in weight monitoring for spill prevention
- Supply material conservation to support waste reduction

Additional information can be found in the **Fill-570 Technical Manual** which is found on the documentation CD that accompanies all application software modules.

1.8.4.9. COM-570

The COM-570 option is a specialized software module solution focused on the needs of users utilizing legacy communication protocols or that have special command requirements. COM-570 maintains all of the standard features and functions of the standard IND570 in addition to the specific features and functions of the COM-570. It provides the following features and functions:

- Custom ASCII command template
- 8142 Host Protocol
- PT6S3 Protocol
- SMA Protocol
- 8530 Host Protocol

Additional information can be found in the **COM-570 Manual** on the documentation CD that accompanies all application software modules.

1.8.4.10. Drive-570

The Drive-570 option is a specialized application solution focused on simple Inbound-Outbound vehicle weighing requirements. Some features of this software include:

- Two modes of operation: Temporary Tare ID Weighing and Permanent Tare ID Weighing
- Ability to store up to 100 Permanent Tare IDs
- Totalization of Permanent Tare IDs
- One-Step processing of Temporary IDs

- Sharing of Temporary IDs between two IND570 terminals for installations utilizing a separate inbound and outbound scale
- Reprint of previous transaction ticket
- Inbound Weight, Date and Time available on both inbound and outbound tickets
- Storage of up to 2000 transactions
- Support for multiple languages

Additional information can be found in the **Drive-570 Manual** on the documentation CD that accompanies all application software modules.

1.8.5. TaskExpert™

TaskExpert functionality provides a way to modify the standard capabilities of an IND570 so that it more closely aligns with a customer's specific application requirements. TaskExpert is a combination of a programming visualization tool, an execution engine and the basic functionality of the terminal. Modifications may be made to the standard sequences of operation and additional functionality may be added to the basic operation of the terminal.

TaskExpert custom programs that were written for the IND560 terminal will function on the IND570. The TaskExpert software development tool provides a converter function for this purpose.

1.8.6. InSite™ SL Configuration Tool

InSite™ SL is available to end users of IND570 terminals. The IND570 terminal can connect to a PC running InSite™ SL via Ethernet or Serial to provide the following functions:

- Saving terminal configuration, data tables and information logs to a local PC
- Loading a saved configuration to other terminals performing similar applications
- Restoring to a 'last known good state' for service purposes

1.9. Display and Keyboard

The IND570 terminal has an organic LED (OLED) display, 256 × 128 dot matrix graphic type display. An example of the IND570 front panel is shown in Figure 1-6.



Figure 1-6: IND570 Front Panel Layout

1.9.1. Display Layout

- A **metrology line** is designed to show the capacity and increment size information for the scale. This line is always shown except when in the setup mode. If multiple ranges are selected, this line will scroll through each of the available capacities and ranges. The metrology line is always in use when the terminal is in Approved mode. For non-approved applications, the metrology line can be enabled/disabled in Setup.
- The **system line** is used to display system messages, messages sent remotely from a PLC, and any asynchronous error messages.
- The **Service Icon** graphic is shown in the system line when specific service events are triggered in the terminal. Details of what has triggered the Service Icon can be found by pressing the INFORMATION RECALL softkey and then the SERVICE ICON softkey.
- The middle portion of the display is reserved for the **weight display**. If the **auxiliary display** enabled, this area of the display is shared between the weight display and the selection for auxiliary display (Figure 1-7). Random data entry is also shown in the bottom of this area.



Figure 1-7: Small Material Transfer SmartTrac Enabled

- SmartTrac is one of the available options for the auxiliary display. If SmartTrac is disabled, the weight display area can be shared with the **Rate display** (Figure 1-8) or **DIO status display** (Figure 1-9Figure 1-9).



Figure 1-8: Rate Display



Figure 1-9: DIO Status Display

- The **Tare display** is designed to show the current Tare value and type (pushbutton or preset). The Tare display can be separately enabled and disabled in Setup.
- The **Legend display** area provides the user with current operational information such as center of zero status, gross or net mode, etc.
- The very bottom of the physical display area is reserved for showing the **graphic labels (icons) for the softkeys**. Display positions for up to five softkey icons are provided. Chapter 2, **Operation,** provides more detailed information about all home screen softkeys, in the **Softkeys and Icons** section.
- To the right of the softkey icon area, space is reserved for MORE UP (⮝) or MORE DOWN (⮟) symbols. If present, these indicate additional softkey selections are available by pressing the UP or DOWN navigation keys. Up to 15 softkeys, presented in three sets of five, can be programmed for the home position, depending upon the weighing options and terminal functions enabled. The softkey setup and key mapping capabilities of the terminal determine the row and position of each softkey.

1.9.2. Front Panel Keys

Four dedicated scale function keys are located below the five softkeys. These provide the interface to zero or tare the scale, clear a tare and to initiate a print.

The terminal's 12-key alphanumeric keypad is used to enter data and commands. The alphanumeric keys are located on the upper-right side of the terminal front panel. Refer to Chapter 2, **Operation**, for additional details about the entry of alphanumeric data.

Five navigation keys are located below the alphanumeric keypad. These keys enable the operator to navigate through setup options in the menu tree and within setup and application screens.

2 Installation

This chapter covers
- Opening and Closing Enclosures
- Environmental Protection
- Mounting the Terminal
- Installing Cables and Connectors
- PCB Switch Settings
- PCB Jumper Positions
- Capacity and Increment Label Instructions
- Sealing the Enclosure

This chapter provides installation instructions for the IND570 terminal panel-mount and harsh enclosures. Please read this chapter thoroughly before beginning installation.



⚠ WARNING!

NOT ALL VERSIONS OF THE IND570 ARE DESIGNED FOR USE IN HAZARDOUS (EXPLOSIVE) AREAS. REFER TO THE DATA PLATE OF THE IND570 TO DETERMINE IF A SPECIFIC TERMINAL IS APPROVED FOR USE IN AN AREA CLASSIFIED AS HAZARDOUS BECAUSE OF COMBUSTIBLE OR EXPLOSIVE ATMOSPHERES.



⚠ DIV 2 AND ZONE 2/22 INSTALLATION

TERMINALS THAT ARE NOT FACORY LABELED AS DIVISION 2 OR EUROPEAN CATEGORY 3 APPROVED MUST NOT BE INSTALLED IN A DIVISION 2 OR ZONE 2/22 ENVIRONMENT.



⚠ WARNING

DO NOT INSTALL, DISCONNECT OR PERFORM ANY SERVICE ON THIS EQUIPMENT BEFORE POWER HAS BEEN SWITCHED OFF OR THE AREA HAS BEEN SECURED AS NON-HAZARDOUS BY PERSONNEL AUTHORIZED TO DO SO BY THE RESPONSIBLE PERSON ON-SITE.



⚠ WARNING

ONLY THE COMPONENTS SPECIFIED IN THIS MANUAL CAN BE USED IN THIS TERMINAL. ALL EQUIPMENT MUST BE INSTALLED IN ACCORDANCE WITH THE INSTALLATION INSTRUCTIONS DETAILED IN THIS MANUAL. INCORRECT OR SUBSTITUTE COMPONENTS AND/OR DEVIATION FROM THESE INSTRUCTIONS CAN IMPAIR THE SAFETY OF THE TERMINAL AND COULD RESULT IN BODILY INJURY AND/OR PROPERTY DAMAGE.

2.1. Opening and Closing Enclosures

Procedures for opening the IND570 terminal panel-mount and harsh enclosures differ and are described in the following sections.

2.1.1. Panel-Mount Enclosure

The panel-mount version of the IND570 is opened by removing the three Phillips-head screws on the back panel (see Figure 2-1). The rear panel can then be removed to gain access to the internal workings of the terminal.



Figure 2-1: Opening the Panel-Mount Enclosure

2.1.2. Harsh Enclosure

2.1.2.1. Opening the harsh Enclosure

The front panel of the harsh enclosure IND570 terminal is locked in place by four spring clips attached to the enclosure body. These four clips are located toward the corners of the enclosure. Two additional clips can be found along the sides of the enclosure. These two clips do not engage with the front cover, and are only there to guarantee proper placement and spacing during installation of the front cover on to the enclosure.

To gain access to the terminal's PCB for internal wiring and setting switches, separate the front panel from the enclosure as follows:

1. Insert the tip of a flat-blade screwdriver into one of the two slots located on the bottom of the front panel assembly (see Figure 2-2) and gently push in toward the enclosure. A "pop" sound is made when the cover is released. Pressing down on the front cover while pressing in on the clip can help facilitate release of the clip.



Figure 2-2: Opening the Harsh Enclosure

2. Repeat Step 1 for the other slot.
3. After releasing the front panel, lift the bottom of the front panel firmly up and out (Figure 2-3, 1) until it completely clears the top edge of the bottom enclosure.
4. Squeeze the top of the front panel to the enclosure slightly and push upward (Figure 2-3, 2) to unsnap the top two clips, then lift it to clear the two top clips. The cover will swing down, hinged by two wire cables at the bottom.



Figure 2-3: Removing the Cover

2.1.2.2. Closing the Harsh Enclosure

1. It is very important to replace the front panel of the harsh enclosure correctly and securely, especially for terminals installed in Division 2 areas classified as hazardous. The two clips positioned on the sides of the enclosure help to facilitate the appropriate spacing. Before it is pressed into place, the front panel must be centered on the enclosure, as shown in Figure 2-4.

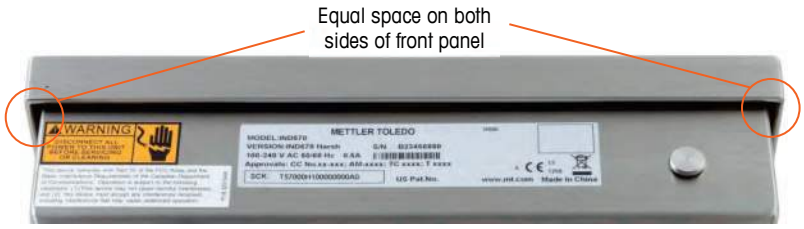

Figure 2-4: Harsh Enclosure Front Panel Correctly Aligned

2. With the cover in place and aligned correctly, press down firmly on the front and back edges in the locations shown in Figure 2-5 until four distinct clicks indicate that each of the four spring catches is engaged.



Figure 2-5: Engaging the Four Spring Catches

2.2. Environmental Protection

	⚠ WARNING
	NOT ALL VERSIONS OF THE IND570 ARE DESIGNED FOR USE IN HAZARDOUS (EXPLOSIVE) AREAS. REFER TO THE DATA PLATE OF THE IND570 TO DETERMINE IF A SPECIFIC TERMINAL IS APPROVED FOR USE IN AN AREA CLASSIFIED AS HAZARDOUS BECAUSE OF COMBUSTIBLE OR EXPLOSIVE ATMOSPHERES.

	⚠ DIV 2 AND ZONE 2/22 INSTALLATION
	TERMINALS THAT ARE NOT FACORY LABELED AS DIVISION 2 OR EUROPEAN CATEGORY 3 APPROVED MUST NOT BE INSTALLED IN A DIVISION 2 OR ZONE 2/22 ENVIRONMENT.

2.3. Mounting the Terminal

The panel-mount enclosure is designed to mount into a cutout of a flat surface such as an instrument panel or industrial enclosure or door. The harsh enclosure is designed to be placed on a desktop or can be mounted to a vertical surface with the mounting brackets included in the terminal packaging. Mount the terminal where viewing is optimal and the terminal keypad is easily accessible. Observe location and environment considerations as described in Chapter 1, Introduction.

2.3.1. Panel-Mount Enclosure

The panel-mount enclosure includes aluminum clamping brackets at the side of the extrusion. Two Allen-head set screws are used to tighten the brackets against the panel surface. The enclosure will mount and seal properly on panel thicknesses from 16 GA to 11 GA.

To install the panel-mount enclosure, follow these steps:

1. Loosen and remove the four Allen-head screws that secure the clamping brackets to the side of the housing (see Figure 2-6). Use the 2mm Allen wrench included with the terminal.



Figure 2-6: Clamping Bracket

2. Remove the two clamping brackets from the housing.
3. Locate the front panel mounting gasket (Figure 2-7) included with the terminal and remove the protective paper to expose the adhesive. Adhere the gasket to the rear of the front panel of the terminal, ensuring that the gasket is flat and spaced evenly on all sides.

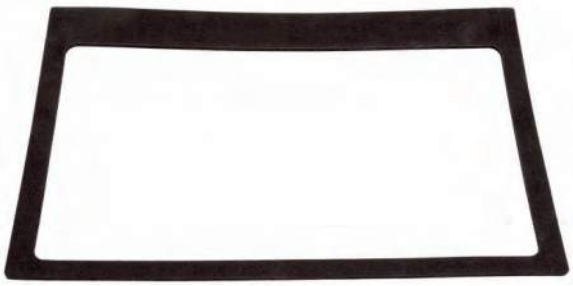

Figure 2-7: Front Panel Gasket

4. Cut an opening in the panel or industrial enclosure per the panel cutout dimensions shown in inches and [mm] in Figure 2-8.

   NOTE: The cutout dimensions of IND570 match those of IND560.

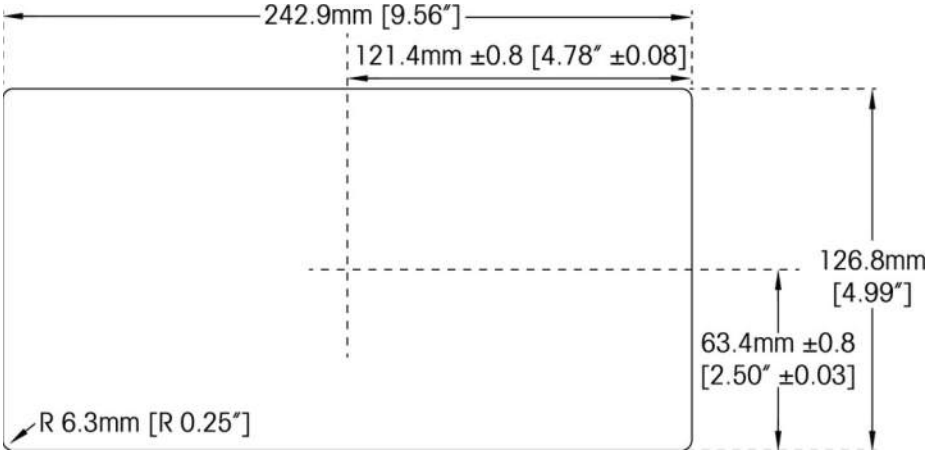

Figure 2-8: Panel Cutout Dimensions

5. Place the terminal through the cutout from the front and secure with the clamping brackets and Allen-head screws. The screws should be tightened to a torque of 5 inch pounds (0.55 N-m).

- NOTE: Once the Allen-head screws have been tightened, and the unit secured into place, the rear cover plate of the IND570 panel mount unit may be difficult to remove and replace for servicing. If this occurs, slight loosening of the Allen-head screws should allow for removal and replacement of the rear cover for service purposes.

By design, the rear cover plate can produce outward force on the (extended) retaining brackets, increasing the overall stiffness of the enclosure structure and providing additional assurance that the panel mount unit will remain securely in place.

2.3.2. Harsh Enclosure

The harsh enclosure is made of stainless steel with a front panel angle of approximately 38 degrees. The harsh enclosure is designed to rest on a flat surface such as a table or desk top, or it can be mounted to a vertical surface with the mounting brackets included with the terminal.

2.3.2.1. Desktop Mounting

When the IND570 terminal will be placed on a flat surface, the four rubber feet included with the terminal should be adhered to the bottom of the enclosure to prevent sliding. Locate the four rubber

feet, remove the protective paper from the adhesive, and press the feet onto the corners of the bottom of the enclosure as shown in Figure 2-9.



Figure 2-9: Rubber Feet

2.3.2.2. Wall Mounting

Two angled brackets are included with a harsh model IND570 for the purpose of mounting the enclosure to a vertical surface. To wall mount the enclosure, follow these steps:

1. Bolt the two brackets to the bottom of the enclosure using the four M5 screws included with the terminal. The brackets should be attached as shown in Figure 2-10.



Figure 2-10: Attaching the Wall-Mounting Brackets

2. If the enclosure will be mounted above eye level, proceed to step 4.
3. If the enclosure will be mounted at or below eye level, it will be necessary to reverse the front cover 180 degrees. Note that reversing of the cover is not possible when the Profibus PLC interface is installed. If the Profibus option is installed, proceed to step 4. To reverse the front cover, perform the following steps:
   A. Open the enclosure per the instructions provided in the Opening the Enclosures section.
   B. Loosen and remove the two nuts securing the two grounding straps (these also operate as hinges for the front cover) to the rear housing. See Figure 2-11.



Figure 2-11: Loosening the Ground Straps



Figure 2-12: Front Panel Removed

C. Carefully rotate the front cover 180 degrees and reattach the two grounding straps to the two studs near the grip bushings using the two nuts removed in the previous step as shown in Figure 2-13. Tighten the two nuts.



Figure 2-13: Front Panel and Load Cell Connection Reversed

4. Mark the position of the mounting holes on the vertical surface per the dimensions shown in Figure 2-14 or by holding the terminal up to the surface and marking through the bracket holes.

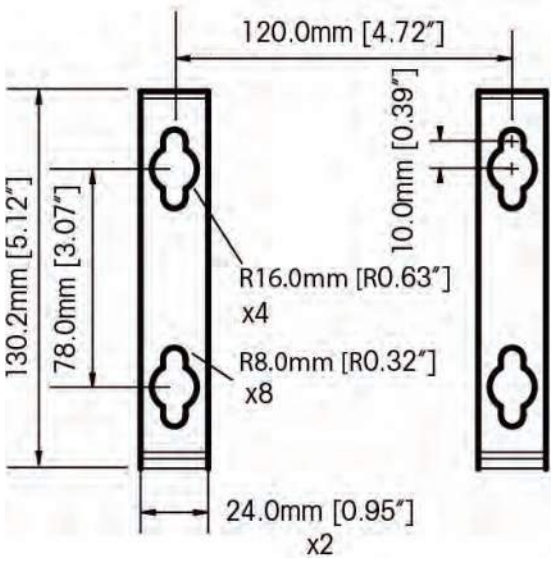

Figure 2-14: Wall Bracket Mounting Hole Pattern

5. The hardware to mount the terminal to the vertical surface is not included with the terminal—it must be supplied locally. Ensure that the mounting hardware is capable of supporting the weight of the terminal, which is approximately 3.5 kg (8 lb). Using the locally supplied hardware, mount the terminal to the vertical surface.

2.4. Installing Cables and Connectors

Information for installing cables and connectors for the IND570 terminal is provided in this section, including: ferrites, harsh enclosure cable glands, main board wiring connections and wiring connections for options.

2.4.1. Ferrites

In order to meet certain electrical noise emission limits and to protect the IND570 from external influences, it is necessary to install a ferrite core on each cable connected to the terminal. There are two ferrite cores included with the basic terminal and additional ferrites are supplied with each of the options.

To install ferrites, simply route the cable through the center of the core and then take one wrap around the outside of the core and route the cable through again. Either the complete cable or the individual wires can be wrapped through the ferrite. This should be done as close to the enclosure as possible. See Figure 2-15.



Figure 2-15: Installing the Ferrite Cores

2.4.2. Harsh Enclosure Cable Openings

Figure 2-16 and Table 2-1 show the uses of the glands and other openings on the rear of the harsh enclosure.



Figure 2-16: Harsh Enclosure Cable Opening Assignments

Table 2-1: Harsh Enclosure Cable Openings

Number	Use	Cable Gland Size, mm
1	Ethernet	25
2	USB and External USB Adapter	25
3	AC Power	16
4	Analog Load Cell	16
5	COM1	16
6	DI/O and PLC options *or* Ethernet Extension Kit	16

2.4.3. Harsh Enclosure Cable Glands

The IND570 harsh environment terminal is designed to withstand severe washdown environments and is certified to IP69K ingress protection. However, care must be taken when installing cables and/or connectors that enter the terminal enclosure. To ensure a watertight seal:

1. Pass the cables through an appropriately sized cable grip before connecting the wires. Figure 2-17 shows one load cell cable installed in its cable grip, and a second grip disassembled.



Figure 2-17: Cable Glands

2. Depending upon the diameter of the cable to be installed, select one of the two different sized rubber grommets (if required) to properly seal around the cable.

Table 2-2: Grommet Cable Sizes

Grommet	Cable Diameter
None	7–10 mm (0.28–0.39 in.)
Larger size hole	5– 6 mm (0.20–0.24 in.)
Smaller size hole	3–4 mm (0.12–0.16 in.)

3. When making cable terminations inside the harsh enclosure, ensure that the cable length from the terminal strip/connector to the terminal housing is sufficient so that no strain is placed on the connector assembly when the housing is in the fully open position.
4. After making the wiring connections as described in the next section, ensure the nut on the cable gland is tightened properly to seal around the cable. Ensure that this seal is watertight.
5. Cable shielding should be grounded to the IND570's enclosure by spreading the shield wires as shown at the top of Figure 2-18, then folding them back over the plastic component of the cable gland before pressing it into the threaded body.

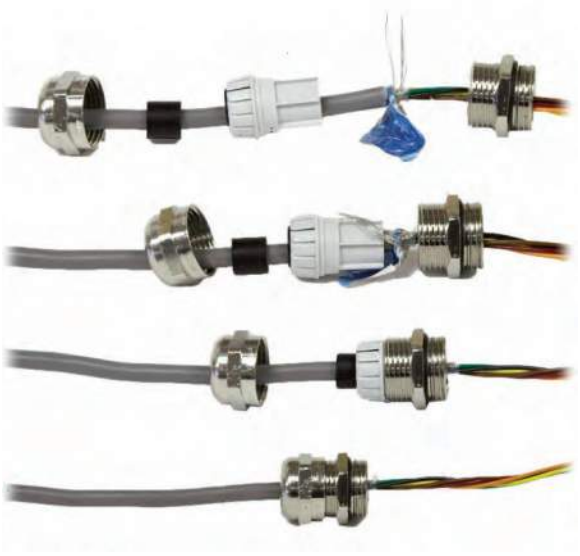

Figure 2-18: Cable Shield Grounding

2.4.4. External USB Adapter

Long-term connection to the USB port on the main board can be made through the available 25mm cable gland. If quick disconnect of a USB device is required for an application, an optional USB adapter kit can be installed on the harsh environment terminal to make the USB connection accessible from outside the harsh enclosure



Figure 2-19: External USB Adapter

2.4.5. Main Board Wiring Connections

Once the IND570 terminal harsh enclosure is open, connections can be made to the terminal strips on the main board, as shown in Figure 2-20.

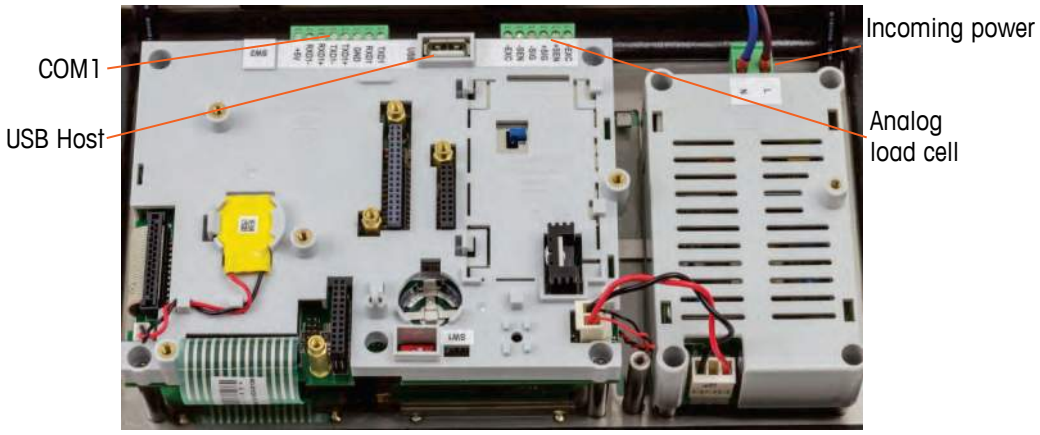

Figure 2-20: Analog Main Board in Harsh Enclosure

It is not necessary to open the panel mount enclosure (Figure 2-21) to make these connections.



Figure 2-21: Panel Mount Enclosure Connections, including IDNet Scale Interface

2.4.5.1. Power Connection

- NOTE: The integrity of the power ground for equipment is important for both safety and dependable operation of the terminal and its associated scale base. A poor ground can result in an unsafe condition should an electrical short develop in the equipment. A good ground connection minimizes extraneous electrical noise pulses.

- NOTE: The IND570 should not share power lines with noise-generating equipment. To confirm ground integrity, use a commercial branch circuit analyzer. If adverse power conditions exist, a dedicated power circuit or power line conditioner might be required.

A permanently attached line cord supplies the AC power to the harsh enclosure version of the IND570 terminal. The panel-mount enclosure is not supplied with a power cord –it is designed to have AC or 24 VDC wiring brought directly to the rear of the chassis and connected to the incoming power terminal strip.

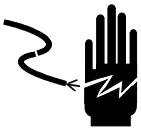

⚠ WARNING

ENSURE THAT THE POWER CONNECTION TO THE IND570 TERMINAL MATCHES THE SPECIFIED OPERATING VOLTAGE OF THE TERMINAL. REFER TO THE DATA LABEL OF THE TERMINAL FOR THE OPERATING VOLTAGE. CONNECTING THE INCORRECT POWER SOURCE TO THE TERMINAL COULD RESULT IN DAMAGE TO OR DESTRUCTION OF THE EQUIPMENT AND/OR BODILY HARM.

2.4.5.1.1. AC Powered Models

When an IND570 is configured for AC power, the two AC power connections are marked "L" for line (hot) and "N" for neutral as shown in Figure 2-22, Figure 2-23 and Figure 2-24. A loop terminal and ground screw are provided for the ground connection on the panel mount. Harsh models have the power ground installed with the region appropriate power cord.

No voltage or frequency settings are required since IND570 includes either a universal AC power supply that operates from 85 to 264 VAC. The AC terminal requires 85 to 264 VAC (at 750 mA maximum) with a line frequency of 49 to 61 Hz of power.

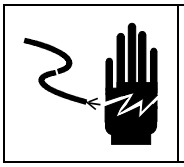

⚠ WARNING

FOR CONTINUED PROTECTION AGAINST SHOCK HAZARD CONNECT TO PROPERLY GROUNDED OUTLET ONLY. DO NOT REMOVE THE GROUND PRONG.

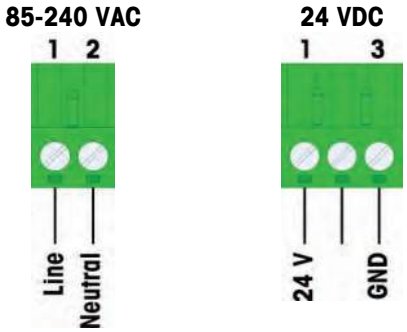

Figure 2-22: Incoming Power Termination



Figure 2-23: AC Power Connection on Panel Mount

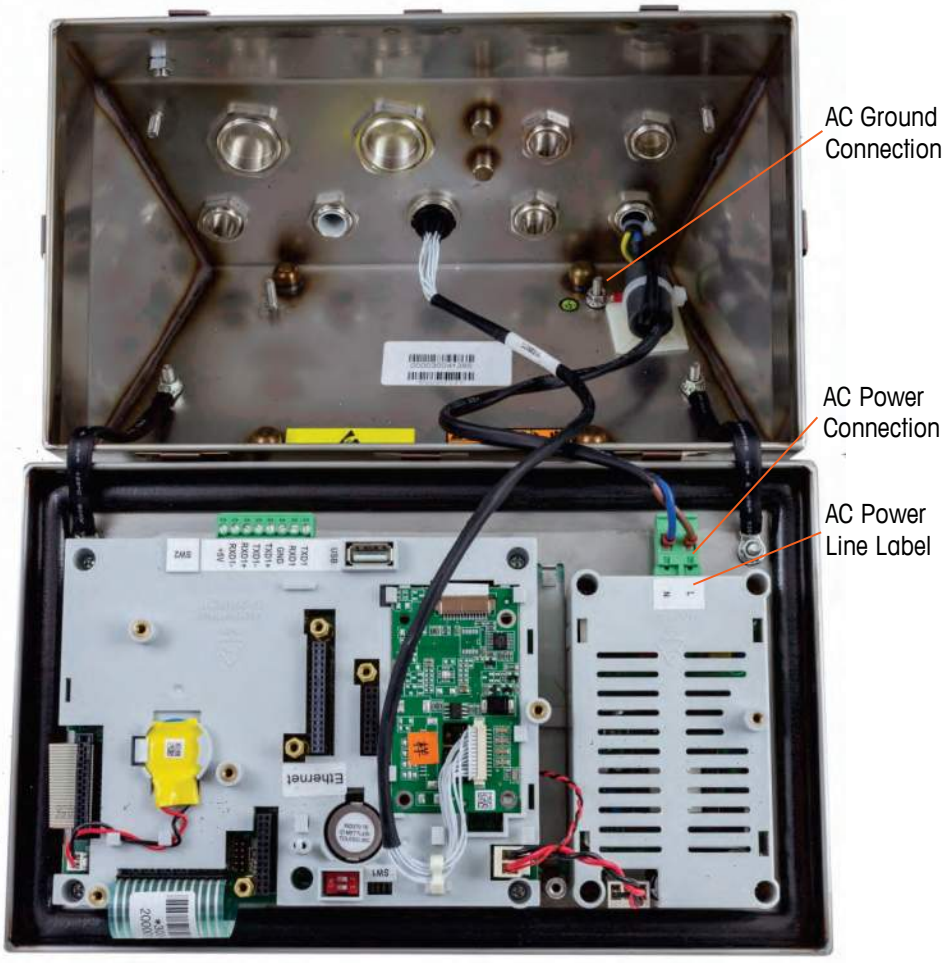

Figure 2-24: AC Power Connections on Harsh Models

2.4.5.1.2. DC Powered Models

24 VDC power is only available on panel mount models. The DC terminal requires 24 VDC, -15%, +20% (at 1.25A maximum).

No power cables are included with the 24 VDC powered IND570 terminals. The 24 VDC power and ground must be brought directly to the power connection of the main board and terminated there. Figure 2-21 and show the three position terminal block provided for the DC power connection. A wire is not terminated to the center position.

2.4.5.2. Analog Load Cell Connections

NOTICE
TO AVOID DAMAGE TO THE PCB OR LOAD CELL, REMOVE POWER FROM THE IND570 TERMINAL AND WAIT AT LEAST 30 SECONDS BEFORE CONNECTING OR DISCONNECTING ANY HARNESS.

When using an analog load cell version of the IND570, load cell connections are made to the connector located on the main board as shown in Figure 2-20.

The IND570 terminal is designed to power up to twelve 350-ohm load cells (or a minimum resistance of approximately 29 ohms). To confirm that the load cell load for this installation is within limits, the total scale resistance (TSR) must be calculated. To calculate TSR:

$$TSR = \frac{\text{Load Cell Input Resistance (Ohms)}}{\text{Number of Load Cells}}$$

Ensure that the TSR of the load cell network to be connected to the IND570 has a resistance greater than 29 ohms before connecting the load cells. If the resistance is less than 29 ohms, the IND570 will not operate properly.

In addition, the maximum cable distance must be reviewed. Table 2-3 provides recommended maximum cable lengths based on TSR and cable gauge.

Table 2-3: Recommended Maximum Cable Lengths

TSR (Ohms)	24 Gauge (meters/feet)	20 Gauge (meters/feet)	16 Gauge (meters/feet)
350	243/800	610/2000	1219/4000
87 (4-350 Ω cells)	60/200	182/600	304/1000
43 (8-350 Ω cells)	30/100	91/300	152/500
29 (12-350 Ω cells)	20/67	50/167	102/333

A jumper is provided that adjusts the gain of the analog section for 2 mV/V or 3 mV/V load cells. The factory default position of this jumper is 3 mV/V. Normally this position will work well for both 2 mV/V and 3 mV/V load cells. If 2 mV/V load cells are used, the jumper can be changed to the 2 mV/V position. Refer to Figure 2-52 for the jumper position.

Figure 2-25 shows the terminal definitions on the analog load cell terminal strip. Note that when using four-wire load cells, jumpers must be placed between the +Excitation and +Sense terminals and between the –Excitation and –Sense terminals.

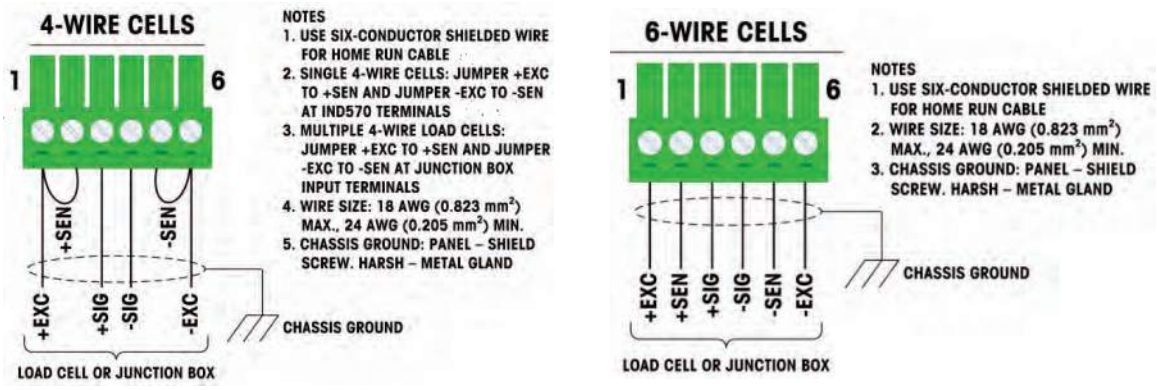

Figure 2-25: Load Cell Termination

- Note for the standard four-wire cable: If an increase in load results in a decrease in weight display, reverse the signal wires (+SIG and –SIG).

2.4.5.3. IDNet Connections

The IND570 terminal supplies 12 V for the newer T-Brick type cell of the IDNet base. Older types of IDNet bases (known as Pik or Pik-Brick) require both a 12 V and a 32 V supply. IND570 does not support older IDNet bases that require a 32 V supply.

When using an IDNet version of the IND570 terminal, the cable connection from the base is made to a connector (Figure 2-26) on the rear of the housing. The IDNet bases are supplied with a length of cable and a connector that mates to the connector on the IND570 terminal.

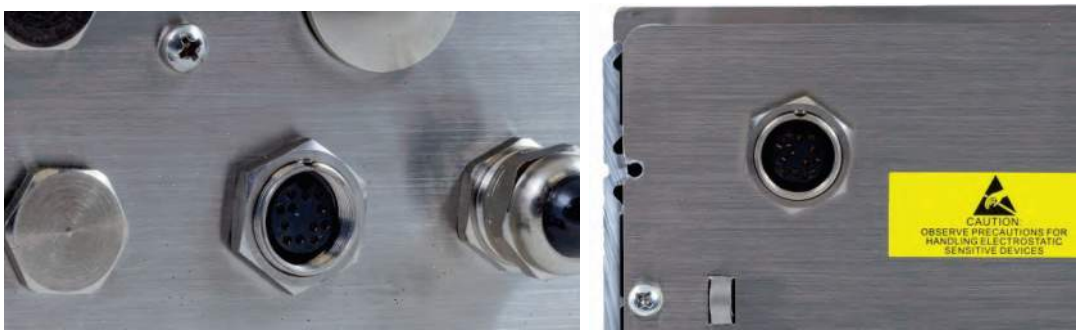

Figure 2-26: IDNet Connector Location on the Harsh (left) and Panel (right) Enclosures

Figure 2-27 shows the pin assignments and wire colors for the IDNet connector.

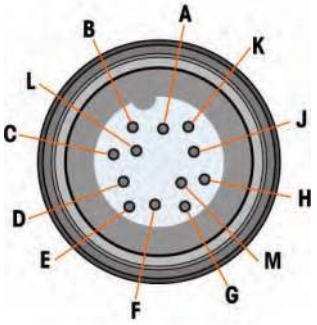

IDNet connector		
Pin	**Color**	**Note**
P1–A	Green	TXD+/RXD+
P1–B	Blue	+30V
P1–C	Grey	+12V
P1–D	Green	Jumper
P1–E	Red	RXD1+
P1–F	White	RXD–
P1–G		
P1–H	Pink	Ground
P1–J	Yellow	TXD–
P1–K	Purple	TXD1–
P1–L	Black	TSD1+
P1–M	Orange	RXD1–

Figure 2-27: IDNet Connector Pin Assignments

2.4.5.4. COM1 Serial Port Connections

The COM1 port includes connections for RS-232, RS-422 and RS-485. There is a setup parameter that must be selected to match the hardware connection used. This parameter controls how the Transmit and Receive lines are controlled.

Figure 2-28 indicates which terminal carries which signal on the COM1 port. Make the connections as necessary.

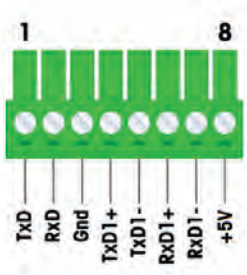

Terminal	Signal	Notes
TxD	Transmit RS-232	
RxD	Receive RS-232	
GND	Logic Ground	
TxD1+	+Transmit RS-422, RS-485	Jumper to RxD1+ for RS-485
TxD1-	-Transmit RS-422, RS-485	Jumper to RxD1- for RS-485
RxD1+	+Receive RS-422, RS-485	Jumper to TxD1+ for RS-485
RxD1-	-Receive RS-422, RS-485	Jumper to TxD1- for RS-485
+5V	5 volts DC	100 mA nominal current

Figure 2-28: COM1 Port Signals

Some examples of connecting external equipment are shown in Figure 2-29.

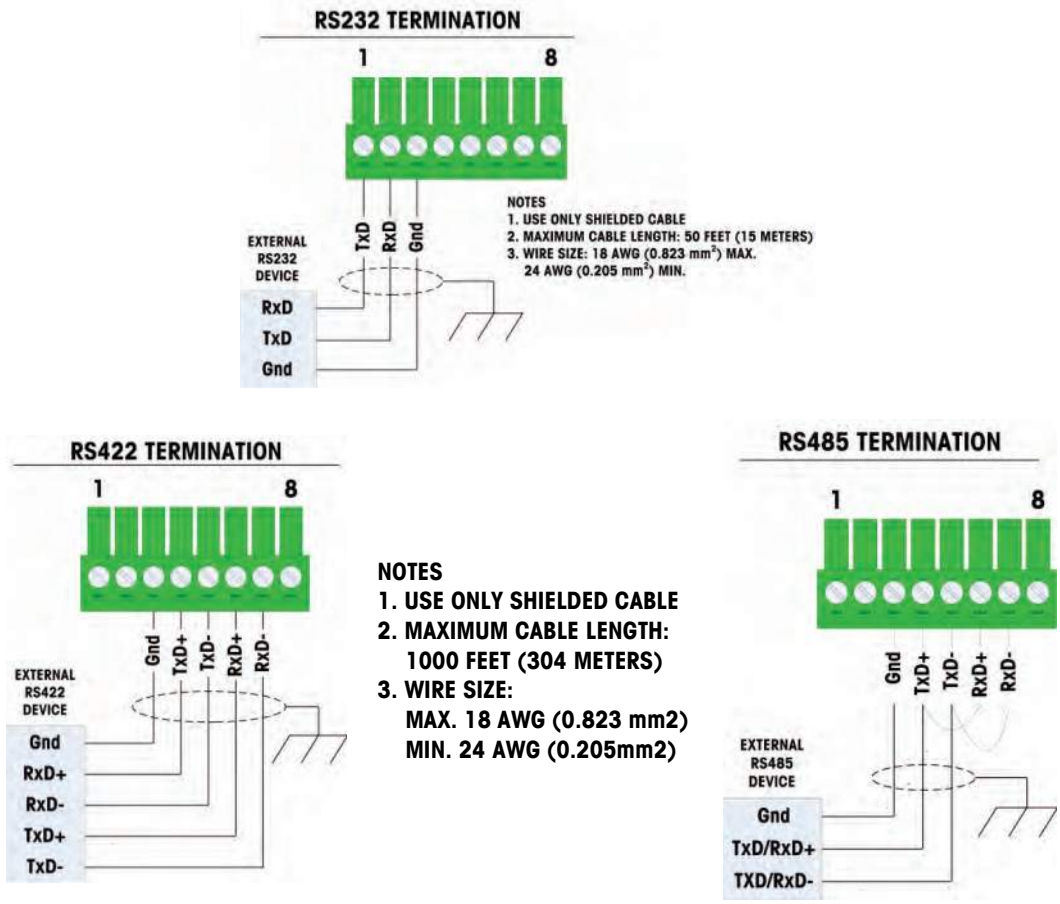

Figure 2-29: Sample COM1 Connections

2.4.5.4.1. RS-485 Transmission Line Termination

The RS-485 network should include a terminating resistor, installed between the two lines at or on the last node. The terminating resistor should match the characteristic impedance of the transmission line, approximately 120 ohms. This terminating resistor is required when connecting ARM100 modules to the port.

2.4.6. Wiring Connections for Options

Options available for the IND570 terminal that require external connections include the following:

- Ethernet TCP/IP
- COM2/COM3 Serial Ports
- 5 In/8 Out Discrete I/O (Relay)
- COM2/COM3 Serial Ports with 2 In/5 Out Discrete I/O (Relay)
- Analog Output
- ControlNet

- DeviceNet
- Profibus (Harsh Enclosure)
- Profibus (Panel-Mount Enclosure)
- EtherNet/IP – Modbus TCP

Options are installed on the main PCB in the locations indicated in Figure 2-30.

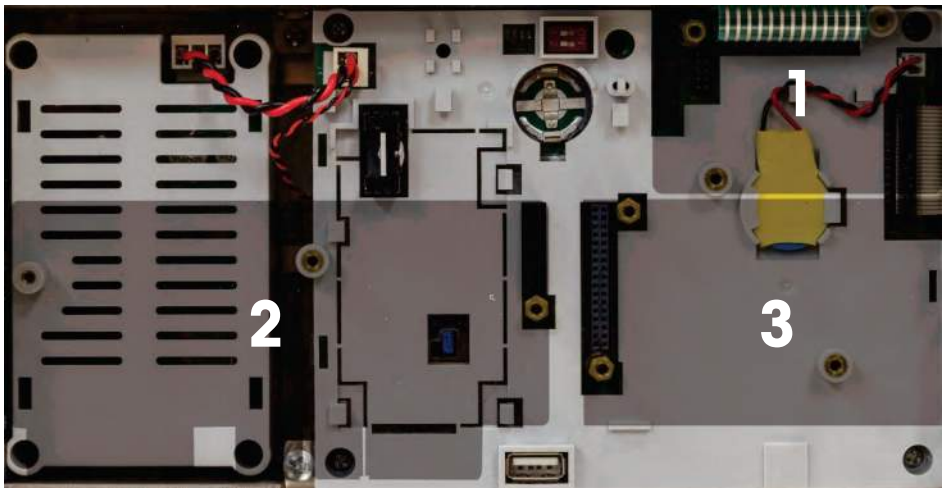

Figure 2-30: Key to Option Board Locations

2.4.6.1. Ethernet Connection

Figure 2-31 shows the Ethernet option board, and Figure 2-32 shows the board installed in position 1 (Figure 2-30) on the main board. This option board provides a 10 Base-T connection (10 Mb) connection for Ethernet. The Ethernet connection is made via a standard RJ45 connector on the option board.



Figure 2-31: Ethernet Connection Option Board



Figure 2-32: Ethernet Option Installed on Main Board

- Important: When installing either the Ethernet option, adhere the Ethernet label from the kit to the rear panel of the panel-mount unit near the Ethernet connector. On the harsh enclosure, adhere the Ethernet label to the Main board cover near the Ethernet connector.

2.4.6.1.1. External Ethernet Adapter

Long-term connection to the optional Ethernet port installed on the main board can be made through the available 25mm cable gland. If quick disconnect of an Ethernet connection is required for an application, an optional Ethernet adapter kit can be installed on the harsh environment terminal to make the Ethernet connection accessible from outside the harsh enclosure. The external Ethernet connector is an M12 connector and can be used with METTLER TOLEDO cable part # 22017610 (M12 to Ethernet-RJ45)



Figure 2-33: External Ethernet Adapter

2.4.6.2. COM2/COM3 Option

Figure 2-34 shows the COM2/COM3 option, and Figure 2-35 shows it installed in position 2 (Figure 2-30) on the main board. This slot is used for all Discrete I/O and COM2/COM3/Discrete I/O combination options.

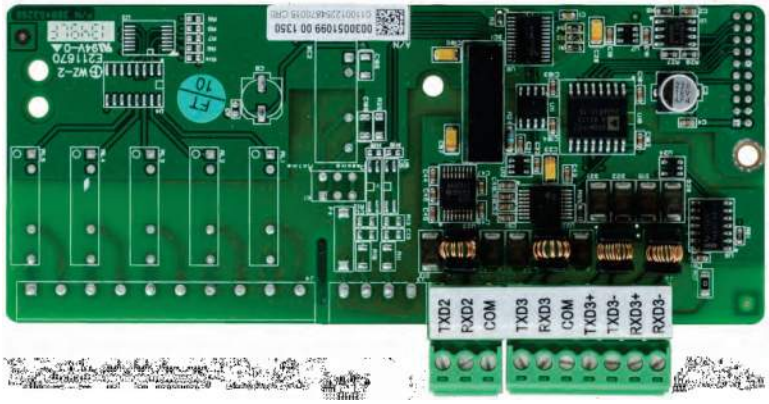

Figure 2-34: COM2/3 Option Board



Figure 2-35: COM2/3 Option Board, Installed

COM2 provides only RS-232 and should be connected as shown in Figure 2-36.

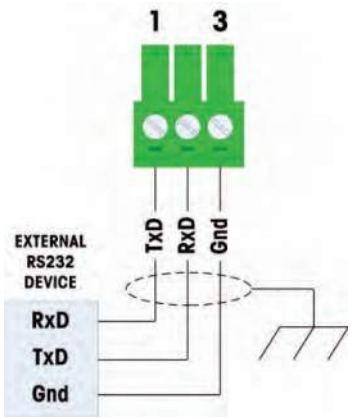

NOTES:

1. USE ONLY SHIELDED CABLE.

2. MAXIMUM CABLE LENGTH: 50 FEET (15 METERS).

3. WIRE SIZE: 18 AWG (.823 mm2) MAX. 24 AWG (0.205 mm2) MIN.

Figure 2-36: Wiring to COM2

COM3 provides RS-232, RS-422 or RS-485 connections, which is identical to COM1 on the Main board except the +5 VDC supply on the last terminal is not provided. Refer to the COM1 connection section described previously for instructions for wiring to this port. Review Figure 2-28 and Figure 2-29 for additional details.

2.4.6.3. Discrete I/O Options

Two Discrete I/O option boards are available, only one of which can be installed at a time:

- 2 in/5 out, relay, with COM2 and COM3 ports
- 5 in/8 out, relay

These option boards are installed in position 2 (Figure 2-30) on the main board. Inputs and outputs are wired as shown in Figure 2-37, Figure 2-38 and Figure 2-39.

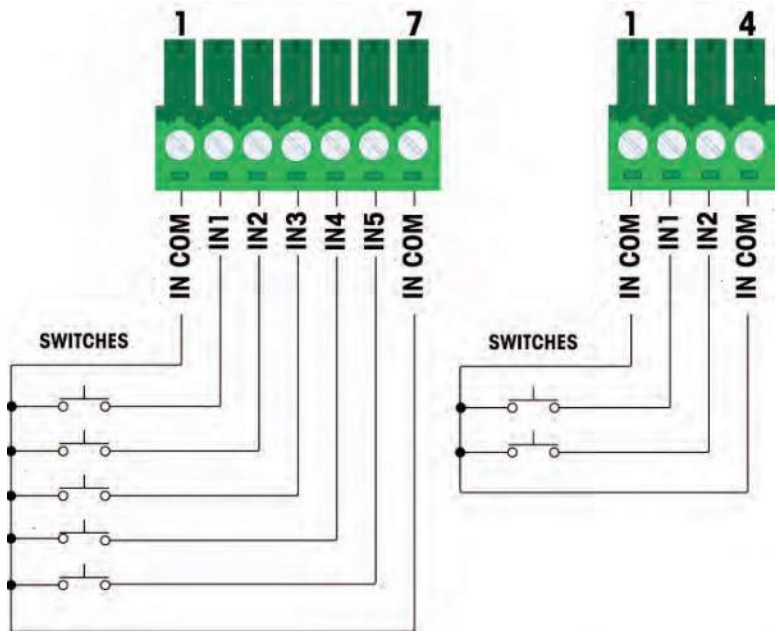

Figure 2-37: Active Input Wiring

- Notes for Active Input Discrete I/O wiring:
  - Voltage is logic level 5 VDC. Low resistance contacts recommended.
  - Maximum cable length of 20 feet (6 meters).
  - Do not bundle input wiring with power wiring or any other high energy cables
  - Switches may be replaced with relay dry contacts
  - Wire sizes: 22 AWG min./ 14 AWG max.

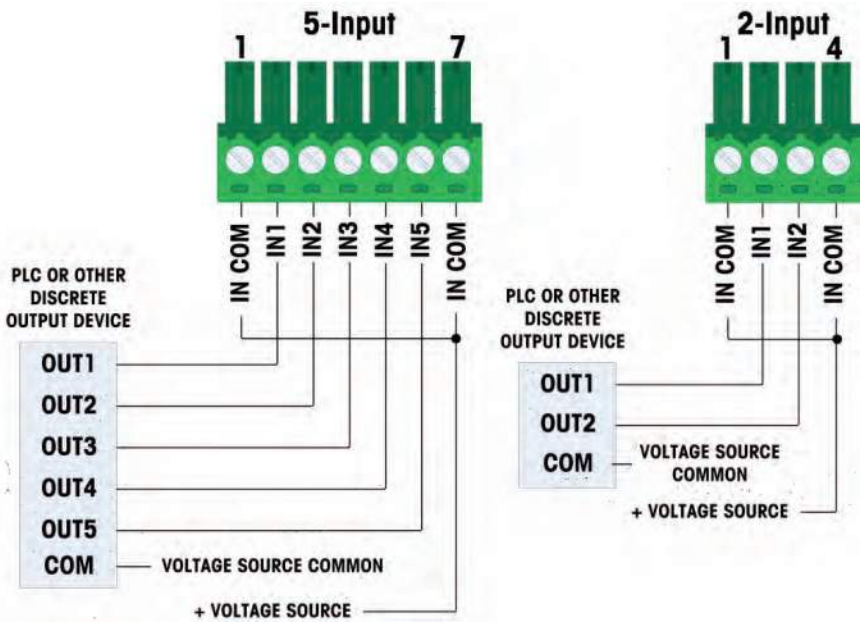

Figure 2-38: Passive Input Wiring

- Notes for Passive Input Discrete I/O wiring:
  - Voltage: 5-30VDC, 10 mA max. current. Voltage polarity may be reversed
  - Do not bundle input wiring with power wiring or any other high energy cables
  - Wire sizes: 22 AWG min./14 AWG max.

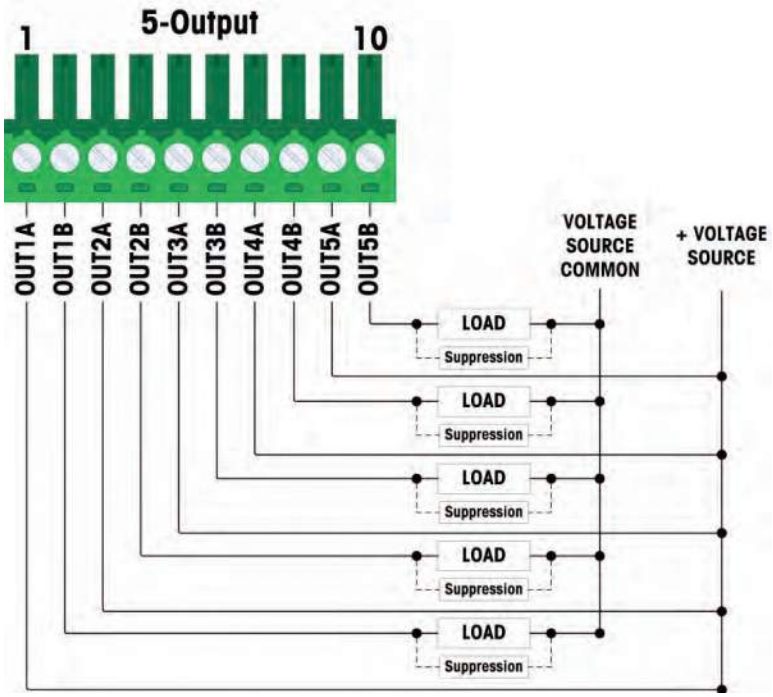

Figure 2-39: Relay Output Wiring, 5 Outputs

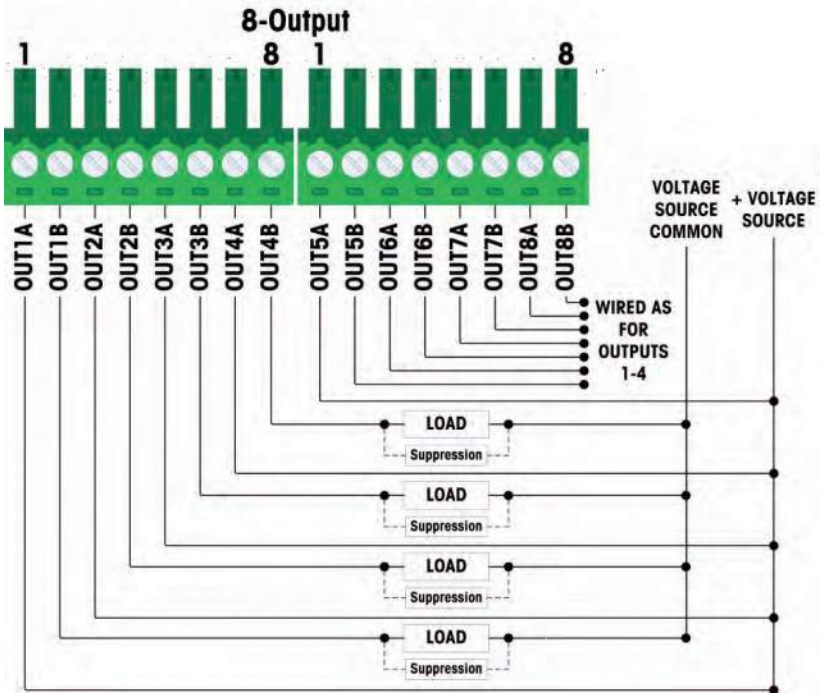

Figure 2-40: Relay Output Wiring, 8 Outputs

- Notes for Active Input Discrete I/O wiring:
  - Dry contact relays:

- Rating:

  AC: 250 VAC max., 1 amp into resistive load

  DC: 30 VDC max., 1 amp into resistive load

  Max. switching power: 250 VA, 30 W
- Max. output circuit current = 3 amps
- All inductive loads must be suppressed
- Wire sizes: 22 AWG min./14 AWG max.

2.4.6.4. Analog Output Option

The analog output option board (Figure 2-41) is installed in position 2 (Figure 2-30) on the main board. It provides either a 0-10 VDC or a 4-20mA (but not both at the same time) analog signal proportional to the weight applied to the scale.

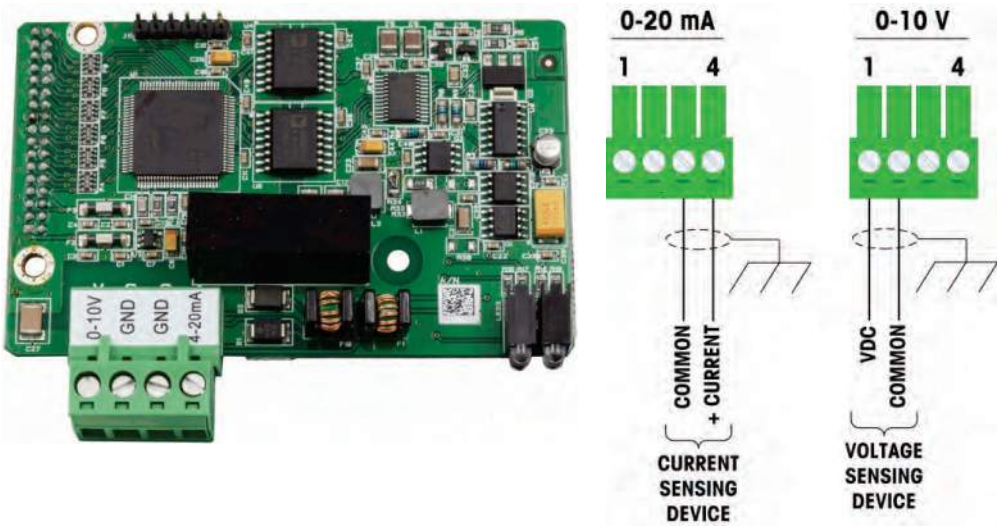

Figure 2-41: Analog Output Option Board and Wiring

- Notes for Analog Output option wiring:
  - Use two-conductor shielded cable.
  - Minimum resistance of 0-10V device: 100 KΩ
  - Maximum resistance of 4-20 mA device: 500Ω
  - Wire sizes: 14 AWG max./22 AWG min.

2.4.6.5. ControlNet PLC Option

The ControlNet PLC option board (Figure 2-42) is installed in position 2 (Figure 2-30) on the main board.

- The ControlNet PLC option can only be installed into a pane-mount IND570 terminal.

The ControlNet option connects to the ControlNet network via a tap and drop cable from the original trunk cable. The option supports one connection or two (for redundancy). Channel A is the normal connection and Channel B (redundant with Channel A) can be used if ControlNet detects no signal

on Channel A. Note that the module's address is set in software, and the MAC ID switches indicated in Figure 2-42 are not used.

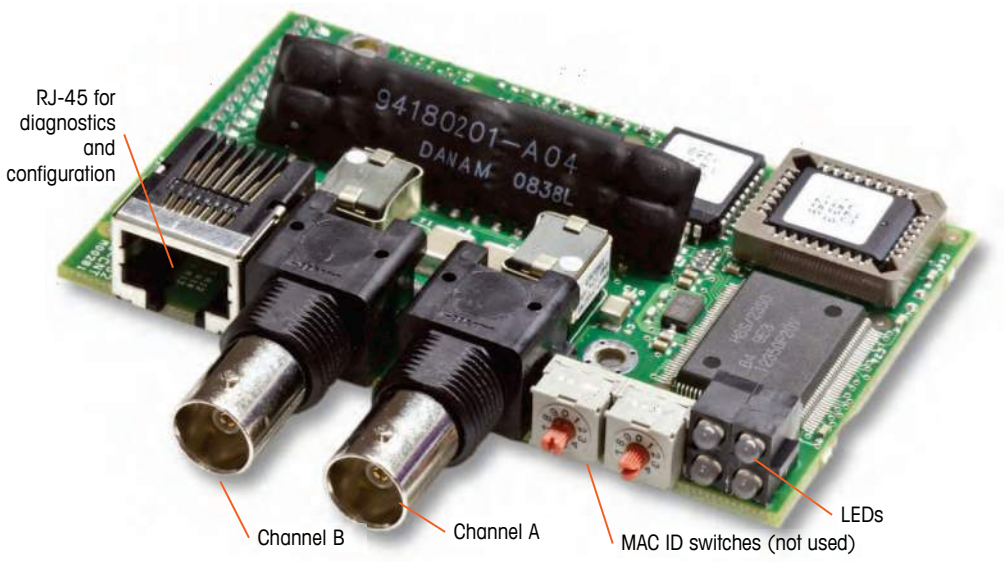

Figure 2-42: ControlNet PLC Module Connections and Components

- **Do not** plug an Ethernet cable into the RJ-45 connector shown at left in Figure 2-42. This connection is not used.

ControlNet network connections are made by using taps and drop cables from the main trunk line. Figure 2-43 shows examples of two different ControlNet tap and drop cables. Note that the connector may be straight or right-angled, as seen here. Either can be used with the ControlNet interface installed in a panel mount IND570. This drop cable is not supplied by METTLER TOLEDO.

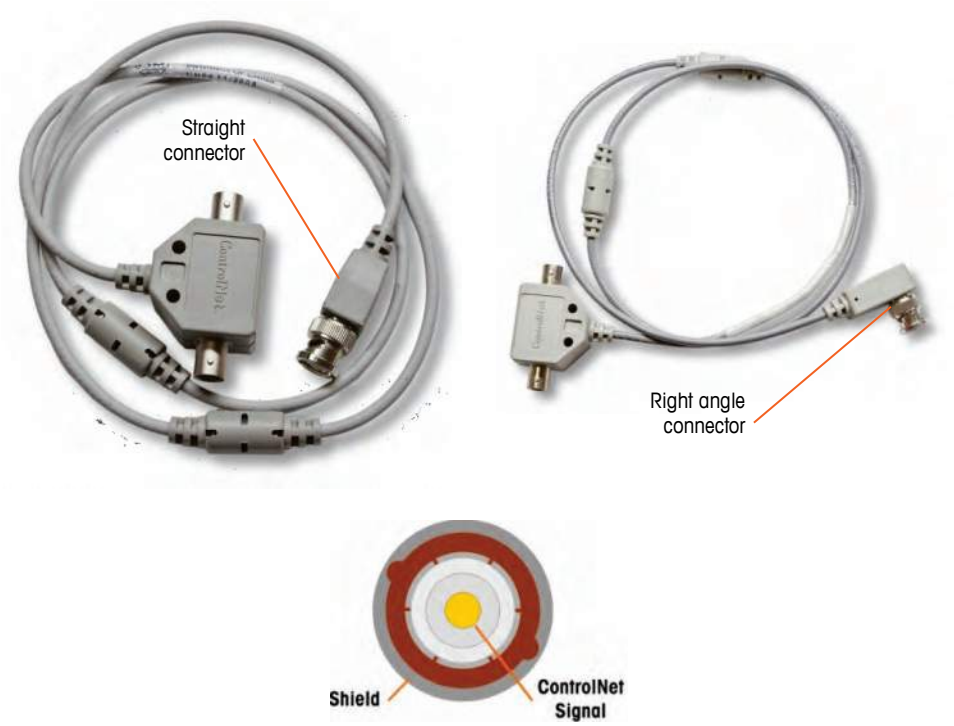

Figure 2-43: ControlNet Tap and Drop Cables

2.4.6.6. DeviceNet PLC Option

The DeviceNet PLC option board (Figure 2-44) is installed in position 2 (Figure 2-30) on the main board. The DeviceNet option board is connected to the network by a DeviceNet-specific twisted pair cable.



Figure 2-44: DeviceNet PLC Option Board and Wiring

- Notes for DeviceNet option wiring:
  - Connection with 2 twisted-pair shielded cables, Belden 3082A or 2083A or equivalent.
  - Refer to ODVA DeviceNet documentation (http://www.odva.org) for other considerations.
  - Wire sizes: 14 AWG max./22 AWG min.

2.4.6.7. EtherNet/IP – Modbus TCP PLC Option

The EtherNet/IP – Modbus TCP PLC option (Figure 2-45) is installed in position 2 (Figure 2-30) on the main board. The EtherNet/IP-Modbus TCP PLC option connects to the network via a standard Ethernet patch cable. The module's address is set in software, and the DIP switches are not used and must all be set to OFF.



Figure 2-45: EtherNet/IP-Modbus TCP Option Board

Figure 2-46 shows the array of status indicator LEDs on the EtherNet/IP card.

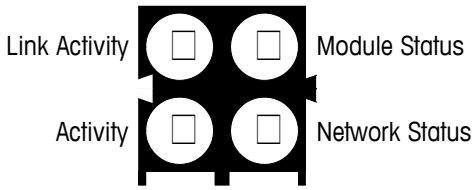

Figure 2-46: EtherNet/IP Status Indicator LEDs

For convenience, an EtherNet/IP PLC label is provided in the kit. The label can be applied to an IND570 near the EtherNet/IP connector to help differentiate the RJ45 connector of the EtherNet/IP PLC option from the RJ45 connector of the Ethernet TCP/IP network option shown in Figure 2-31and Figure 2-32.

2.4.6.8. Profibus PLC Option (Harsh Enclosure)

The Profibus PLC option board (Figure 2-47) is installed in position 2 (Figure 2-30) on the main board. Connection to the Profibus board in the harsh enclosure (Figure 2-47) is made using a right-angle nine-pin connector inside the IND570 enclosure. This connector is a standard Siemens part # 6ES7 972-0BA41-0XA0 or equivalent. It is not supplied by METTLER TOLEDO.

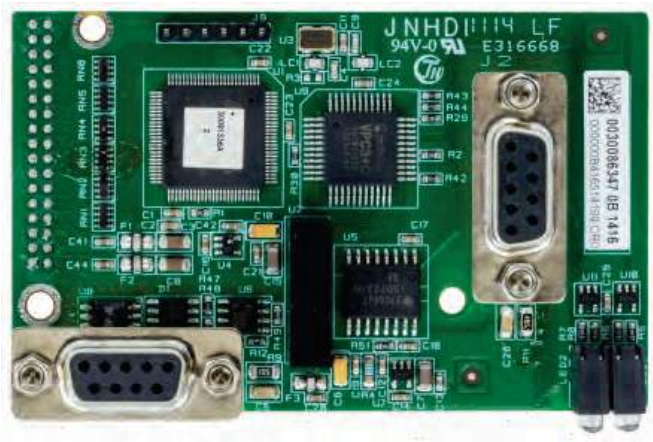

Figure 2-47: Profibus Option Board for Harsh Enclosure

There are two nine-pin connectors on the Profibus board – use the connector and cable routing shown in Figure 2-48. Refer to Figure 2-50 for the Profibus nine-pin connector assignments and follow the wiring instructions included with the connector to terminate the wires.



Figure 2-48: Profibus Cable Connection in Harsh Enclosure

2.4.6.9. Profibus PLC Option (Panel-Mount Enclosure)

The Profibus PLC option board (Figure 2-47) is installed in position 2 (Figure 2-30) on the main board.

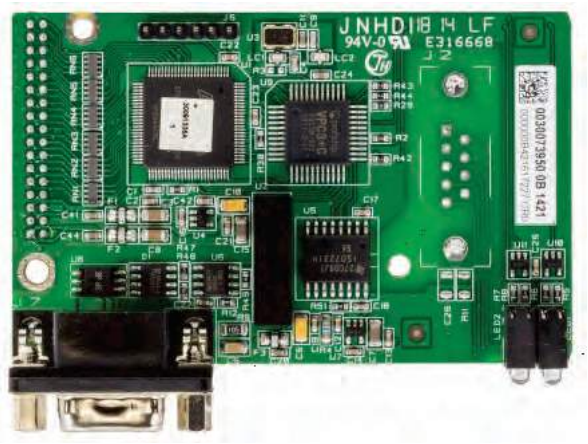

Figure 2-49: Profibus Option Board, Panel Mount Enclosure

Either a straight or a right-angled nine-pin connector can be used to make the connection to the Profibus option board installed in a panel-mount version of the IND570. The right-angle nine-pin mating connector is Siemens part # 6ES7 972-0BA41-0XA0. The straight mating connector is

METTLER TOLEDO part # 64054361. Neither of these connectors is supplied by METTLER TOLEDO as part of the option.

Pin assignments for the Profibus PLC interface for both the harsh and the panel-mount enclosure are shown in Figure 2-50. Follow the wiring instructions included with the connector to terminate the wires.

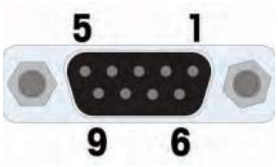

Pin	Signal
1	Not used
2	Not used
3	RxD/TxD +
4	RTS
5	GND bus
6	+5V bus
7	Not used
8	RxD/TxD -
9	Not used

NOTES:

1. **USE MATING CONNECTORS AND CABLE RECOMMENDED FOR Profibus CONNECTIONS.**
2. **REFER TO Profibus INTERNATIONAL DOCUMENTATION FOR OTHER CONSIDERATIONS.**

Figure 2-50: Profibus Nine-Pin Connector Assignments

2.5. PCB Switch Settings

PCB switch settings are described in this section, including settings for main PCB switches and the discrete I/O (relay) switch.

2.5.1. Main PCB Switches

Four switches (indicated in Figure 2-51, which shows the Analog version of the terminal) are located on the main PCB. These switches function as shown in Table 2-4.

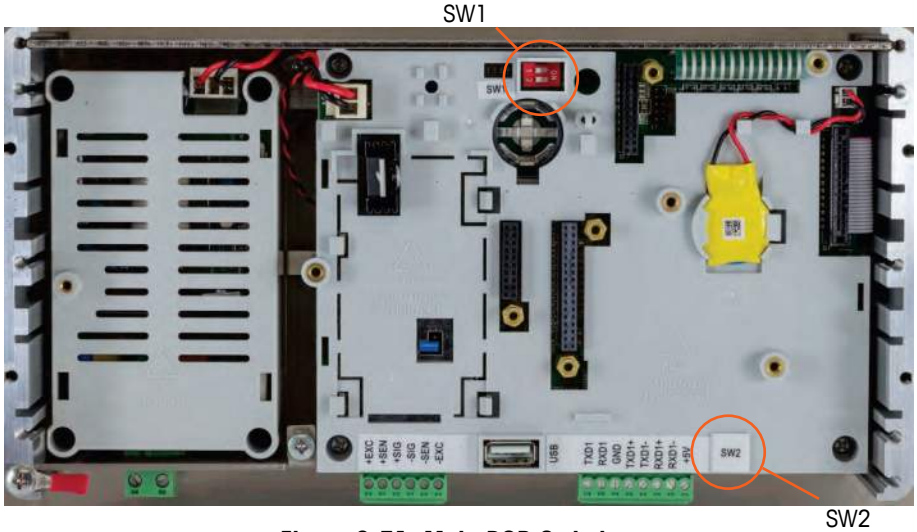

Figure 2-51: Main PCB Switches

Table 2-4: Functions of Main PCB Switches

Switch	Functions	
SW1-1	Metrology Security Switch (legal for trade). When in the ON position, this switch reduces Administrator access to Maintenance level which prohibits access to the Scale block in the menu tree and other metrologically significant areas. This is true even if no scale approval option is selected in setup.	When both SW1-1 and SW1-2 are set to ON and power is cycled, a Master Reset is performed. Metrologically significant data are not reset unless SW2-1 is also set to ON.
SW1-2	Flash Software. Set in the ON position during software download Set in the OFF position during normal operation	
SW2-1	Factory test. Set in the OFF position at all times for normal weighing. This switch must be ON when connecting to the InSite™ CSL program using the COM1 serial port of the IND570 terminal.	When a Master Reset is performed, set SW2-1 to ON to reset metrologically significant data, such as scale calibration, GEO code, etc.
SW2-2	Factory test. Set in the OFF position at all times	

- When both SW1-1 and SW1-2 are positioned ON and AC power is applied to the terminal, a Master Reset function will be initiated. This procedure will erase all programming in the terminal and return all settings back to factory default values. This process is described in Chapter 5, Service and Maintenance.

2.6. PCB Jumper Positions

Only the analog version of the Main board has a jumper on it. This section provides the details for this jumper.

2.6.1. Main PCB Jumper

The IDNet version of the IND570 main board has no jumpers. There is one jumper on the IND570 analog scale main board (W1). This jumper selects either 2 mV/V or 3 mV/V operation of the analog circuitry. 3mV/V is the factory default position. Refer to Figure 2-52 for the jumper location and Figure 2-53 for its settings.

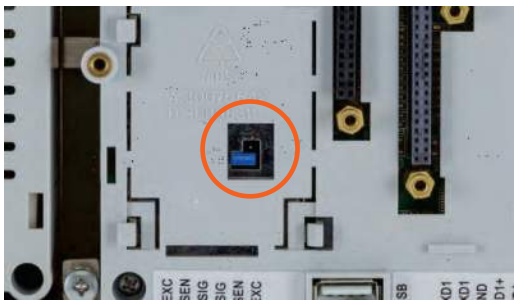

Figure 2-52: W1 Millivolt Jumper Location, Main PCB

- When removing the W1 jumper for 3mV/V operation, reposition it on just one of the pins, as shown in Figure 2-52 and at left in Figure 2-53. If this jumper is not correctly positioned, the plastic cover over the Main board will not fit properly. If this occurs, do not force the plastic cover down. Remove the cover and position the jumper as shown.



Figure 2-53: W1 Millivolt Jumper Positions

The 2 mV/3 mV jumper settings are described in Table 2-5.

Table 2-5: Millivolt Jumper Description

Jumper	Setting	Description
W1	OPEN	Sets the connected scale's load cell setting to 3 mV/V
	CLOSED	Sets the connected scale's load cell setting to 2 mV/V.

2.7. Scale Capacity and Increment Display Options

2.7.1. Metrology Line

In order to meet metrological requirements from different regions of the world, a metrological line that shows capacity and increment information or Max/Min/e information on the IND570 display can be enabled within terminal configuration (Figure 2-54). This line is always shown except when in the setup mode. If multiple ranges are selected, this line will scroll through each of the available capacities and ranges.

- The metrology line is always in use when the terminal is in Approved mode. For non-approved applications, the metrology line can be enabled/disabled in setup.

Refer to the **Scale** and **Terminal** sections in Chapter 3, **Configuration**, for details on enabling the Metrology Line in IND570. In cases where the metrology line of data is not accepted by an agency, it can be disabled and a label with the required information may be installed near the display.



Figure 2-54: Metrology Line on IND570 Display

2.7.2. Capacity Label Instructions

To further ensure that scale capacity and increment display requirements can be met during installation, a blue capacity label is included with the terminal. This label can be completed and adhered to the front of the terminal overlay as shown in Figure 2-56.

The capacity label (shown in Figure 2-55) provides space for the Max, min, and e information for each range or interval for which the scale is programmed. If only one or two ranges are used, the unused portion of the label may be cut off with scissors. Written information must be legible and a minimum of 2mm or 0.08 in. in height. A permanent marker should be used for this information.



Figure 2-55: Preparing the Capacity Label

Clean any oil or other contaminants from the area of the overlay shown in Figure 2-56 where the capacity label will be added. Peel the backing from the label and adhere it to the overlay in the location shown in Figure 2-56, or another location acceptable to the local regulations.



Figure 2-56: Capacity Label Installed

2.8. Sealing the Enclosure

When the IND570 terminal is used in a metrologically "approved" application, it must be protected from tampering by use of seals. An optional sealing kit is available from METTLER TOLEDO. The kit (part number 30130836) contains all the required hardware. The method used for sealing will vary depending upon local requirements. The IND570 supports external sealing.

2.8.1. External Sealing of the Panel-Mount Enclosure

The panel-mount enclosure supports both two- and three-screw external sealing for the United States and Canada. For external sealing of the panel-mount enclosure, refer to Figure 2-57, Figure 2-59, and Figure 2-60 and follow these steps:

1. Ensure that the appropriate approval region has been selected in setup under Scale > Type > Approval and that the Metrology security switch SW1-1 is in the "on" position.
2. Replace the three Phillips-head screws that secure the rear panel to the enclosure with the three through-hole screws provided in the sealing kit.
3. Thread the wire cable and plastic seal (Figure 2-57) included with the kit through the holes in the new screws. The U.S. requires use of only two of the screws (Figure 2-59). Canada requires use of all three (Figure 2-60).
4. Thread the end of the wire cable through the plastic seal and snap the seal shut.

- Note that there are additional parts in the sealing kit that are only used for sealing in China. For all other regions, only the 3 through-hole screws and sealing wire are required.



Figure 2-57: External Sealing Wire



Figure 2-58: Sealing Screws Installed



Figure 2-59: External Sealing for United States

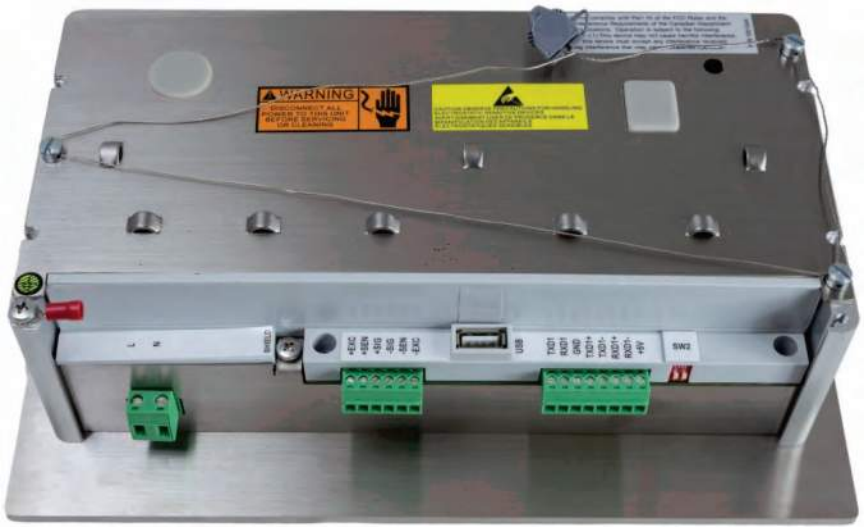

Figure 2-60: External Sealing for Canada

2.8.2. External Sealing of the Harsh Enclosure

For external sealing of the harsh enclosure, refer to Figure 2-57 and Figure 2-61 and follow these steps:

1. Ensure that the appropriate approval region has been selected in setup under Scale > Type > Approval and that the Metrology security switch SW1-1 is in the "on" position.

- Refer to section 2.1.2.2, **Closing the Harsh Enclosure**, for the correct method to use when replacing the front panel.

2. With the front panel installed on the enclosure and snapped into place, thread the free end of the wire seal through either the left or right hole in the IND570 front panel, and through the hole in the retaining clip.

3. Thread the end of the wire cable through the hole in the plastic seal (as shown in Figure 2-61), remove any remaining slack in the wire, and snap the seal shut.



Figure 2-61: Harsh Enclosure Seal Threaded and Ready to be Closed – Standard Orientation (left) and with Panel Reversed (right)

4. Trim off any excess wire.

METTLER TOLEDO Service

To protect your METTLER TOLEDO product's future:

Congratulations on choosing the quality and precision of METTLER TOLEDO. Proper use according to these instructions and regular calibration and maintenance by our factory-trained service team ensure dependable and accurate operation, protecting your investment. Contact us about a METTLER TOLEDO service agreement tailored to your needs and budget.

We invite you to register your product at www.mt.com/productregistration so we can contact you about enhancements, updates and important notifications concerning your product.

www.mt.com/IND570
For more information

Mettler-Toledo, LLC
1900 Polaris Parkway
Columbus, OH 43240
Phone 800 438 4511
Fax 614 438 4900

© 2015 Mettler-Toledo, LLC
30205319 Rev. 02, 04/2015
Document version B

30205319

NATIONAL TYPE EVALUATION PROGRAM

Certificate of Conformance

for Weighing and Measuring Devices

For:
Indicating Element
Digital Electronic
Model: IND570
n_{max}: 10 000 (Class III/IIIL); 100 000 (Class II)
Accuracy Class: II/III/IIIL

Submitted By:
Mettler-Toledo, LLC
1150 Dearborn Drive
Worthington, OH 43085
Tel: 614-438-4387
Fax: 614-438-4355
Contact: Scott Davidson
Email: scott.davidson@mt.com
Web site: www.mt.com

Standard Features and Options

- Semi-Automatic (push-button) Zero Setting Mechanism (SAZSM)
- Automatic Zero Tracking (AZT)
- Initial Zero Setting Mechanism (IZSM)
- Semi-Automatic (push-button) Tare
- Keyboard Tare
- Unit Switching (kg, g, t, lb, oz, ton, dwt, ozt)
- Gross/Net/Tare Display
- Alphanumeric Display
- Multi-Interval
- Multiple Range
- AC Power Supply
- AC/DC Adaptor
- RS-232 Port
- USB
- Remote Printer Capability
- IDNet (interfaced to compatible IDNet devices)
- Intrinsic Safe Barrier, Model ISB
- Analog or Digital Platform Scale Inputs

Temperature Range: -10 ºC to 40 ºC (14 ºF to 104 ºF)

This device was evaluated under the National Type Evaluation Program and was found to comply with the applicable technical requirements of "NIST Handbook 44: Specifications, Tolerances and Other Technical Requirements for Weighing and Measuring Devices." Evaluation results and device characteristics necessary for inspection and use in commerce are on the following pages.

John Gaccione
Chairman, NCWM, Inc.

Stephen Benjamin
Chairman, National Type Evaluation Program Committee
Issued: December 13, 2013

1135 M Street, Suite 110 / Lincoln, Nebraska 68508

The National Conference on Weights and Measures (NCWM) does not approve, recommend or endorse any proprietary product or material, either as a single item or as a class or group. Results shall not be used in advertising or sales promotion to indicate explicit or implicit endorsement of the product or material by the NCWM.

Mettler-Toledo, LLC

Indicating Element / IND570

Application: General purpose indicating element for use with NTEP approved and compatible weighing elements.

Identification: The required information appears on a self-destructive label on the back of the indicator. The capacity x division statement and capacity in all weight ranges are on the weight display.

Sealing: The metrological parameters are sealed using a physical wire seal.

The Panel Mount version is sealed with a wire threaded through bolts at a distance such that the seal will be broken when an attempt is made to unscrew the bolts.

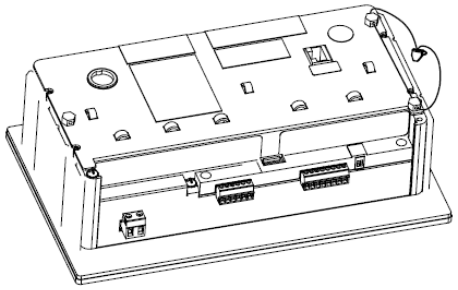

The Desk / Harsh enclosure is sealed by passing the wire through a hole in the center of the cover and then through a hole in a tab on the bottom of the housing.

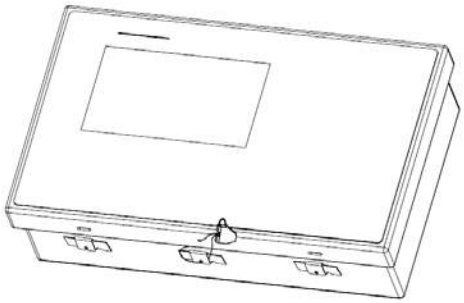

Access to metrological features will be denied when the device is set to Type Approved:

- To verify type approval press the info icon "" then press the metrology icon "M"
- The statement "Approved: Yes" will be displayed if the device is in the sealed legal for trade or
- The statement "Approved: No" will be displayed if the device is not sealed legal for trade
- In either case, press the exit icon "" two times to exit back to the weighing mode

Mettler-Toledo, LLC

Indicating Element / IND570

Test Conditions: The emphasis of the evaluation was on the device design, operation, marking requirements and compliance with influence factors. The indicator was interfaced with a KA series (Certificate of Conformance Number 00-075A1) Class II approved load-receiving element to verify compliance with zero, zone of uncertainty and motion detection requirements. A load cell simulator was interfaced to the device for Class III, multi-interval and multiple range testing; several increasing/decreasing tests were performed. The device was tested over a temperature range of -10° C to 40° C (14°F to 104°F). Tests were conducted using 100 VAC and 240 VAC.

Evaluated By: J. Morrison (OH)

Type Evaluation Criteria Used: *NIST Handbook 44 Specifications, Tolerances, and Other Technical Requirements for Weighing and Measuring Devices*, 2013 Edition. *NCWM Publication 14 Weighing Devices*, 2013 Edition.

Conclusion: The results of the evaluation and information provided by the manufacturer indicate the device complies with applicable requirements.

Information Reviewed By: J. Truex (NCWM)

Examples of Device:





NATIONAL TYPE EVALUATION PROGRAM

Certificate of Conformance

for Weighing and Measuring Devices

For:
Weighing/Load Receiving Element
Digital Electronic
Models: 2256, PFA564, PFA569
n_{max}: 5 000
e_{min}: 0.5 lb
Capacity: 500 lb to 10 000 lb
Accuracy Class: III

Submitted By:
Mettler-Toledo, LLC
1150 Dearborn Drive
Columbus, OH 43085
Tel: 614-438-4387
Fax: 614-438-4355
Contact: Scott Davidson
Email: scott.davidson@mt.com

Standard Features and Options

Construction:

- Model 2256 - Mild Steel or Stainless Steel
- Model PFA564 - Mild Steel
- Model PFA569 – Stainless Steel

Platform sizes:

- 2' x 2' to 8' x 10'

Load Cells Used:

- Four Stainless Steel, Toledo Model 745 (Certificate of Conformance Number 92-108) or Metrologically Equivalent

Options:

- Ramps and Locating Plates

Temperature Range: -10 ºC to 40 ºC (14 ºF to 104 ºF)

This device was evaluated under the National Type Evaluation Program and was found to comply with the applicable technical requirements of "NIST Handbook 44: Specifications, Tolerances and Other Technical Requirements for Weighing and Measuring Devices." Evaluation results and device characteristics necessary for inspection and use in commerce are on the following pages.

Ronald Hayes
Chairman, NCWM, Inc.

John Gaccione
Chairman, National Type Evaluation Program Committee
Issued: October 23, 2014

1135 M Street, Suite 110 / Lincoln, Nebraska 68508

The National Conference on Weights and Measures (NCWM) does not approve, recommend or endorse any proprietary product or material, either as a single item or as a class or group. Results shall not be used in advertising or sales promotion to indicate explicit or implicit endorsement of the product or material by the NCWM.

Mettler-Toledo, LLC

Weighing/Receiving Element / 2256, PFA564, PFA569

Application: For general purpose weighing.

Identification: The required information is on an adhesive badge affixed to the junction box. The junction box is located beneath the access cover on top of the load-receiving element.

Sealing: The junction box can be sealed with a wire security seal threaded through two holes in the cover and enclosure.

Test Conditions: This Certificate supersedes Certificate of Conformance Number 95-111A7 and is issued to correct the model name in the For Box, Standard Features and Option Box. The model PFA566 is incorrect and should be listed as PFA569. Based on information supplied by the manufacturer, there was no need for any testing. Previous test conditions are listed below for reference.

Certificate of Conformance Number 95-111A7: This Certificate supersedes Certificate of Conformance Number 95-111A6 and is issued to include the platform range 2' x 2' to 8' x 10' in the Standard Features and Options Box and include the capacity 500 lb to 10000 lb in the For Box. The 8' x 10' platform size and 500 lb capacity are metrological equivalent to existing models listed on the certificate. A 1000 lb (6' x8') was interfaced to a IND780 indicator (Certificate of Conformance 06-017) and submitted for evaluation. Several increasing / decreasing load shift were performed.

Certificate of Conformance Number 95-111A6: This Certificate supersedes Certificate of Conformance Number 95-111A5 and is issued to include the platform range 2' x 2' to 5' x 5' in the Standard Features and Options Box. The 2' x 2' platform size is metrological equivalent to existing models listed on the certificate. Based on information supplied by the manufacturer, there was no need for any additional testing.

Certificate of Conformance Number 95-111A5: This Certificate supersedes Certificate of Conformance Number 95-111A4 and is issued to add model names PFA564 and PFA569. These models are metrological equivalent to existing model 2256. No testing was deemed necessary.

Certificate of Conformance Number 95-111A4: This Certificate supersedes Certificate of Conformance Number 95-111A3 and is issued without testing to add the wording "or metrologically equivalent" to page 1 under "Standard Features and Options."

Certificate of Conformance Number 95-111A3: This Certificate supersedes Certificate of Conformance Number 95-111A2 and is issued to include 0.5 lb e_{min} for a 2500-lb platform. Data from the previous test was reviewed and no further testing was deemed necessary.

Certificate of Conformance Number 95-111A2: This Certificate superseded Certificate of Conformance Number 95-111A1 and was issued to increase the number of scale divisions from 3000 to 5000. Data from the previous test was reviewed and no further testing was deemed necessary.

Certificate of Conformance Number 95-111A1: This Certificate superseded Certificate of Conformance Number 95-111 and was issued to include additional platform and capacity sizes. The emphasis of the evaluation was on the device design, operation, and marking requirements. Two weighing elements were submitted for evaluation. A 3000 lb (3' x 3') scale base was interfaced with a Toledo Scale Model 8412 (Certificate of Conformance Number 87-106) indicator. A 10 000 lb (5' x 5') scale base was interfaced with a Mettler-Toledo Model Lynx (Certificate of Conformance Number 95-085) indicator. Several increasing/decreasing load, shift and corner tests were performed. The devices were used for 21 days with the minimum use criteria required by NTEP being met, then tested again.

Certificate of Conformance Number 95-111: The emphasis of the evaluation was on the device design, operation, and marking requirements. The 5' x 5' platform was submitted for evaluation interfaced with a Toledo scale Model 8412 (Certificate of Conformance Number 87-106) indicator. Several increasing/ decreasing load, shift and corner tests were performed. The devices were tested over a temperature range of -10 °C to 40 °C (14 °F to 104 °F). A load of one-half scale capacity was applied to the scale more than 100 000 times.

Evaluated By: A. McCoy (OH) 95-111 & 95-111A1; J. Morrison (OH) 95-111A5; E. Matthews (OH) 95-111A7

Mettler-Toledo, LLC

Weighing/Receiving Element / 2256, PFA564, PFA569

Type Evaluation Criteria Used: NIST, Handbook 44: Specifications, Tolerances and Other Technical Requirements for Weighing and Measuring Devices, 2009. NCWM, Publication 14: Weighing Devices, 2009.

Conclusion: The results of the evaluation and information provided by the manufacturer indicate the device complies with applicable requirements.

Information Reviewed By: L. Bernetich (NCWM) 95-111A4, 95-111A5; J. Truex (NCWM) 95-111A6, 95-111A7, 95-111A8

Example of Device:



Standard Terms and Conditions of Sale for METTLER TOLEDO Industrial, Retail and Lab Products (U.S.)

1. CONTRACT – All current and future sales transactions by Mettler-Toledo, LLC ("Company") are expressly subject to these terms and conditions. Modifications or additions will be recognized only if accepted in writing by an officer of Company. Provisions of the original purchaser ("Buyer")'s purchase order, including Buyer's terms and conditions of purchase, or other documents that add to or differ from these terms and conditions, including any documents presented to Company's field service representatives, are EXPRESSLY rejected. No waiver of these terms and conditions or acceptance of others will be construed as a failure of Company to raise objections. Buyer's acceptance of delivery of the equipment and/or services shall, without prejudice to any other manner in which acceptance of these terms and conditions may be evidenced, constitute unqualified acceptance of these terms and conditions. Any specifications not specifically agreed to in writing are subject to change without notice.

2. QUOTATIONS AND PUBLISHED PRICES – Quotations automatically expire 30 calendar days from the date issued unless otherwise stated in the quotation and are subject to withdrawal by notice within that period. Any purchase or service order issued by Buyer upon an expired quotation may be accepted by Company at its sole discretion; any such acceptance will be communicated to Buyer in writing. Prices shown on the published price lists and other published literature issued by Company are not unconditional offers to sell and/or perform services and are subject to change without notice. Company's prices for equipment, unless otherwise specified, do not include an allowance for shipping, installation and/or final on-site adjustment. Prices are subject to adjustment to those in effect at time of shipment or performance of services and may be adjusted to include any necessary surcharge(s). Pricing that differs from Company's published price lists is confidential to Company, and Buyer agrees to strictly maintain such confidentiality. Company expressly disclaims any representation or warranty concerning "most favored customer" pricing which may appear in any of Buyer's documents in connection with any sale by Company to Buyer.

3. TAXES – Company's prices do not include any applicable sales, goods/services, use, excise or similar taxes, and the amount of any such tax which Company may be required to pay or collect will be added to each invoice and paid by Buyer unless Buyer has furnished Company with a valid tax exemption certificate acceptable to the taxing authorities prior to shipment. If an exemption certificate provided to Company by Buyer is, through no fault of Company, subsequently determined to be invalid, the previously unpaid sales, use, excise or similar tax will be billed to and paid by Buyer.

4. TERMS OF PAYMENT – Unless prepayment is required, terms are cash net 30 days from date of shipment. Payment is due upon invoice for performances of services. Amounts past due are subject to a service charge equal to the greater of 1.5% per month (or fraction thereof) or the maximum contract rate permitted by law. Upon default and placing of Buyer's account for collection or repossession of equipment, Buyer agrees to reimburse collection costs, legal fees, and court costs incurred by Company in connection therewith. If Company deems that by reason of the financial condition of Buyer or otherwise, the continuance, production or shipment on the terms specified is not justified, Company may require full or partial payment in advance. On orders of $100,000 or more and having a delivery schedule of 6 months or longer from date of order, the standard terms will be progressive payments. Subject to the warranties expressly stated in 10 below, all sales are final without right of return. Any indebtedness of Buyer to Company may, at Company's sole option, be credited at any time against any amounts owing by Company to Buyer hereunder.

5. DELIVERY – Delivery dates are approximate and are based on prompt receipt of all necessary information regarding the equipment to be delivered, including but not limited to any import/export authorizations required by law or regulation. Company will use reasonable efforts to meet the indicated delivery and service dates but will not be held responsible for its failure to do so. Risk of loss shall pass to Buyer upon delivery to a carrier. In the event of any delay in delivery caused by Buyer, Company will store and handle all items at Buyer's risk and will invoice Buyer for the unpaid portion of the contract price, plus applicable storage, insurance, and handling charges. The invoice will be payable in full within 30 days from the invoice date. Company has the right to make partial shipments and bill for those shipments; Buyer will make payment in accordance with terms referenced in 4 above. Company will not accept responsibility for any shortages or damages unless all shipping containers and packing materials are retained for inspection.

6. SHIPPING AND HANDLING CHARGES – Shipments are FOB Shipping Point. Unless Buyer elects a freight collect shipment, shipping charges plus the applicable Company handling charge will be prepaid and billed as a separate item on the equipment invoice.

7. CHANGES – Buyer may with the express written consent of Company make changes in the specifications for equipment or work covered hereunder. In such event, the price and delivery dates will be equitably adjusted. Company will be entitled to payment for reasonable profit plus costs and expenses incurred by it for work and materials rendered unnecessary as a result of such changes and for work and materials required to effect said changes.

8. CANCELLATION – Undelivered parts of any order may be canceled by Buyer only with the prior written approval of Company. If Buyer makes an assignment for the benefit of creditors, or in the event Company has reason to believe that Buyer is unwilling or unable to perform, Company will have the unconditional right to cancel this sales transaction or demand full or partial payment in advance pursuant to 4 above. In the event of any cancellation of this order by either party, Buyer will pay to Company the reasonable costs and expenses (including engineering expenses and all commitments to its suppliers and subcontractors) incurred by Company prior to receipt of notice of such cancellation, plus Company's usual rate of profit for similar work. The minimum cancellation charge will be 15% of the price hereunder.

9. SECURITY INTEREST – Buyer hereby grants to Company a purchase money security interest in the equipment, acknowledges the validity of and its own assent to such a grant, and agrees not to challenge the legitimacy of such a grant. Buyer will assist Company in taking all necessary actions to perfect and protect Company's security interest. In the event of a default by Buyer, Company will be entitled to any of the rights and remedies provided by law or in equity.

10. WARRANTIES: ABSENT A SEPARATE WARRANTY ISSUED TO BUYER BY COMPANY, COMPANY EXPRESSLY WARRANTS THE EQUIPMENT MANUFACTURED AND THE SERVICES PERFORMED BY IT TO BUYER SOLELY AS SET FORTH HEREIN. COMPANY DISCLAIMS ALL OTHER WARRANTIES, EITHER EXPRESS OR IMPLIED (INCLUDING WITHOUT LIMITATION WARRANTIES AS TO MERCHANTABILITY OR FITNESS FOR A PARTICULAR PURPOSE). THESE WARRANTIES MAY BE TRANSFERRED TO A SUBSEQUENT PURCHASER OF THE EQUIPMENT ONLY WITH THE PRIOR WRITTEN CONSENT OF COMPANY. IN ADDITION, THE FOLLOWING SHALL CONSTITUTE THE SOLE AND EXCLUSIVE REMEDIES OF BUYER FOR ANY BREACH BY COMPANY OF ITS WARRANTY HEREUNDER.

A. PRODUCT – Company warrants that the equipment covered by this warranty will be free from defects in workmanship and materials, under normal use, for a period of 1 year from the date of original installation, or 18 months from the date of shipment to Buyer, whichever occurs first. Should any such defects be found and reported during the term of the warranty, Company will, at its option, refund the purchase price or correct such defects, furnishing replacement parts and labor free of charge to Buyer. Company will also furnish travel up to 80 kilometers (50 miles) from the nearest Company service representative or authorized Company service provider free of charge during the warranty period.

B. SOFTWARE – Company warrants that software developed by Company will perform substantially the functions described in the software documentation when properly installed. Company does not warrant that the software is error-free, that Buyer will be able to operate the software without interruption, or that the software will be free of vulnerability to intrusion or attack. The warranty period will be the same as the warranty period for the Company equipment within which the software is embedded. If the software is not embedded within Company equipment, the terms and conditions of the respective end user license agreement of Company shall apply exclusively. If no end user license agreement is applicable, the warranty period will be 90 days from the date of purchase by Buyer.

C. SERVICE – Company warrants that services will be performed in a workmanlike manner in conformity with standard industry practice. Should any nonconformity be detected within 30 days after the work is completed and prompt notification is made by Buyer in writing to Company, Company will supply the necessary service, direction or consultation to correct the nonconformity.

D. GENERAL – The foregoing warranties are further subject to the following general conditions: (1) Consumables, accessories, normal wear and tear, wear parts and perishables are expressly excluded from the foregoing warranties. (2) If Buyer requests the performance of warranty work provided for under the foregoing warranties during other than normal Company work periods, Buyer will be required to pay for all premium time. (3) These warranties will not apply where Company's equipment and/or software has been subjected to: accident, alteration, misuse, abuse, failure on the part of Buyer to ensure proper storage, operation and/or maintenance, installation or servicing by other than Company authorized personnel, the addition or supply of equipment not approved for incorporation into Company's product, integration into the Buyer's environment, or Buyer/ third party supplied software or interfacing. (4) Company does not warrant the calibration of any scale. Company does however warrant the scales manufactured by it to be capable of being adjusted to meet Company's printed specifications, if any, for weighing accuracy as to the particular model/type scale for the period of warranty above stated when properly installed and used. (5) Products of other manufacturers sold by Company as such are warranted by Company solely to the extent of any remaining warranty provided by the original manufacturer. (6) In the event equipment is repaired by Company, the performance of such repair work will not extend existing nor generate new warranty coverage for the equipment as a whole or for those parts not repaired or replaced by Company. (7) This Section 10 shall not apply to ICS226 and ICS241 products which are covered under a separate warranty.

E. METHODS OF CORRECTION OF DEFECTS DURING WARRANTY – To correct defects Company may attempt to diagnose and resolve the defect over the telephone or electronically. Certain equipment contains remote support capabilities for direct problem reporting, remote problem determination, and resolution with Company. When Buyer contacts Company for warranty work, it must follow the problem determination, resolution and procedure that Company specifies. At any time following or to assist in problem determination, Company may require return of the part or product to depot for service. If Company determines on-site work is required, a service technician will be scheduled for on-site work. If Buyer gives notice of a defect to Company and requests Company for on-site work when the defect could have been remedied remotely, or if Company responds to Buyer's notice of defect and no defect is found for which Company is liable, Company shall be entitled to compensation for any work performed and costs it has incurred as a result of Buyer's request. Company encourages Buyer to use available remote support technologies. Failure to install and use available remote connectivity tools and equipment for direct problem reporting, remote problem determination and resolution may result in increased response-time and additional costs to Buyer.

11. INDEMNITY – Company agrees to indemnify Buyer and hold it harmless from and against any direct loss suffered and any direct liability to third parties whenever such loss or liability is directly due to bodily injury (including death) to any third party or direct damage to any third party property occurring in the course of, and caused exclusively by, any negligent act or omission by Company on the premises of Buyer that occurs in the performance of the work contemplated herein. This indemnity shall include reasonable legal fees and settlements of claim or suit. Buyer shall provide prompt written notice to Company of any actual or anticipated claims against it that might trigger the foregoing indemnity; failure to do so waives Buyer's right to indemnification hereunder. Following such written notice, Company shall have the sole and exclusive right to manage the defense of any indemnified claims and shall be authorized to settle or compromise such claims at its sole and exclusive discretion. Buyer shall cooperate in the defense of all indemnified claims as deemed necessary by Company.

12. PATENT INFRINGEMENT – Company shall defend any suit or proceeding brought against Buyer so far as the same is based on a valid claim that any equipment of Company's design furnished hereunder, or any part thereof, constitutes an infringement of any applicable patent, if notified promptly in writing and given authority, information and assistance (at Company's expense) for the defense of the same and if such alleged infringement is not the result of a design or other special requirement specified by Buyer or the result of the application or the use to which such equipment is put by Buyer or others. Company will pay all damages and costs finally awarded in such suit or proceeding against Buyer provided that Company has the sole and exclusive right to defend, settle or compromise any suit or proceedings and Buyer takes no action that would materially detract from Company's ability to conduct an effective defense, settlement or compromise. In case such equipment or part in such suit held to infringe any such patent and the use thereof is enjoined, Company will at its expense either, at its option; (a) obtain for Buyer the right to continue using such equipment or part or; (b) replace the same with non infringing equipment, or; (c) modify the same so that it becomes non infringing or; (d) remove said equipment and refund the purchase price and the transportation and installation costs thereof. The foregoing states the entire liability of Company to Buyer for patent infringement.

13. REGULATORY LAWS AND OR STANDARDS – The performance of the parties hereto is subject to the applicable laws of the United States of America. Company takes reasonable steps to keep its products in conformity with various nationally recognized standards and such regulations, which may affect its products. However, Company recognizes that its products are utilized in many regulated applications and that from time to time standards and regulations are in conflict with each other. Company makes no promise or representation that its product will conform to any federal, provincial, state or local laws, ordinances, regulations, codes or standards except as particularly specified and agreed upon in writing by authorized officers of Buyer and Company. Company prices do not include the cost of any related inspections or permits or inspection fees.

14. INTELLECTUAL PROPERTY – The sale and delivery of Company's equipment and/or software to Buyer will in no way transfer to Buyer any right of ownership in any patents, copyrights, trademarks, technologies, designs, specifications, drawings, or other intellectual property incorporated into the equipment and/or software.

15. DISCLAIMER OF DAMAGES – IN NO EVENT WILL COMPANY BE LIABLE TO BUYER OR ANY OTHER PARTY FOR ANY TYPE OF SPECIAL, CONSEQUENTIAL, INDIRECT, INCIDENTAL, EXEMPLARY OR PUNITIVE DAMAGES, WHETHER SUCH DAMAGES ARISE OUT OF OR ARE A RESULT OF BREACH OF CONTRACT, WARRANTY, TORT (INCLUDING NEGLIGENCE), STRICT LIABILITY OR OTHERWISE. Such damages shall include but not be limited to loss of profits or revenues, loss of use of the equipment or associated equipment, cost of substitute equipment, facilities, down time costs, increased construction costs or claims of Buyer's customers or contractors for such damages. Buyer will not transfer, assign or lease the equipment sold hereunder to any third party without first securing from such party the protection afforded to Company herein.

16. LIMITATION OF LIABILITY – Company will not be liable for any loss, claim, expense or damage caused by, contributed to or arising out of the acts or omissions of Buyer or third parties, whether negligent or otherwise. In no event will Company's aggregate liability for any and all types of damages or losses related to these terms and conditions or the products or services sold or delivered pursuant hereto exceed the cost of the item giving rise to the claim, whether based in contract, warranty, indemnity, or tort (including negligence). Any suit arising hereunder must be commenced within one year from the date on which the cause of action accrues.

17. NO RESPONSIBILITY FOR GRATUITOUS INFORMATION OR ASSISTANCE – Company will not be liable for any information, assistance or advice that, though not required to be provided to Buyer hereunder, is nevertheless provided to Buyer by employees and/or agents of Company while performing Company's obligations hereunder.

18. INSURANCE – Upon request, Company shall provide evidence of insurance in accordance with its standard coverage and limits. Company does not provide third parties direct access to its insurance or give additional rights to its insurance, such as naming additional insured parties.

19. FORCE MAJEURE – The inability of Company to fulfill its obligations required under these terms and conditions resulting from defaults or delays caused by conditions beyond Company's reasonable control including, but not limited to strikes, insurrection, acts of God, war, terrorist activities, emergencies, shortages or unavailability of materials, weather, change in law or other similar causes, will extend the period for the performance of the obligations for the period equal to the period(s) of any such delays(s) and Buyer will not have the right to termination; provided that Company will continue to perform to the extent feasible in view of such force majeure.

20. EXPORT CONTROL - Buyer acknowledges that the equipment may include technologies and software that are subject to export control regulations in Europe or the United States of America or countries in which the equipment is delivered or used. The Buyer is solely responsible for adherence to these restrictions in case the Buyer exports or re-exports the equipment and the Buyer agrees to indemnify and hold Company harmless from, or in connection with, any violation of such export restrictions by Buyer, or its employees, consultants, agents, or customers.

21. INTERPRETATION – If any of these terms and conditions contravenes or is invalid under applicable law, these terms and conditions shall not fail as a result but will be construed as if such term or provision was not included. The invalid, illegal or unenforceable provision shall be deemed to be automatically modified, and, as so modified, to be included in these terms and conditions, such modification being made to the minimum extent necessary to render the provision valid, legal and enforceable. Waiver or excuse by Company of any noncompliance with these terms and conditions shall not constitute a waiver or excuse of any prior or subsequent noncompliance.

22. RETURNS – Items returned for Buyer's convenience (and not for product or part failure or warranty issues) will be subject to a 15% restocking fee, minimum $200. Company must be contacted for a Return Authorization Number (RAN) within 21 days of shipment (for a customer) or 30 days of shipment (for a dealer / distributor) from Company to be eligible for return credit. Buyer must return items within 10 days of receiving a RAN. Item must be in new and unused condition, packed in original packaging and container, and include all manuals, peripherals and accessories.

23. SURCHARGES – Company's pricing shall be subject to certain additional surcharges ("Surcharges") at Company's sole discretion. Such Surcharges may be required to partially offset the increase in costs of certain raw materials and other commodities including, but not limited to, fuel and steel. Applicable Surcharges will appear on invoices issued by Company to Buyer and shall be due and payable in accordance with the invoice terms. Company shall periodically update any applicable Surcharges based upon reported pricing in the respective industry.

24. GOVERNING LAW AND PLACE OF JURISDICTION – The legal relationship between Buyer and Company shall be governed by the laws of the State of Ohio and the United States of America. Exclusive place of jurisdiction shall be Franklin County, Ohio. Company however reserves the right to initiate court proceedings against the Buyer at any other court of competent jurisdiction. The United Nations Convention on Contracts for the International Sale of Goods is explicitly excluded.

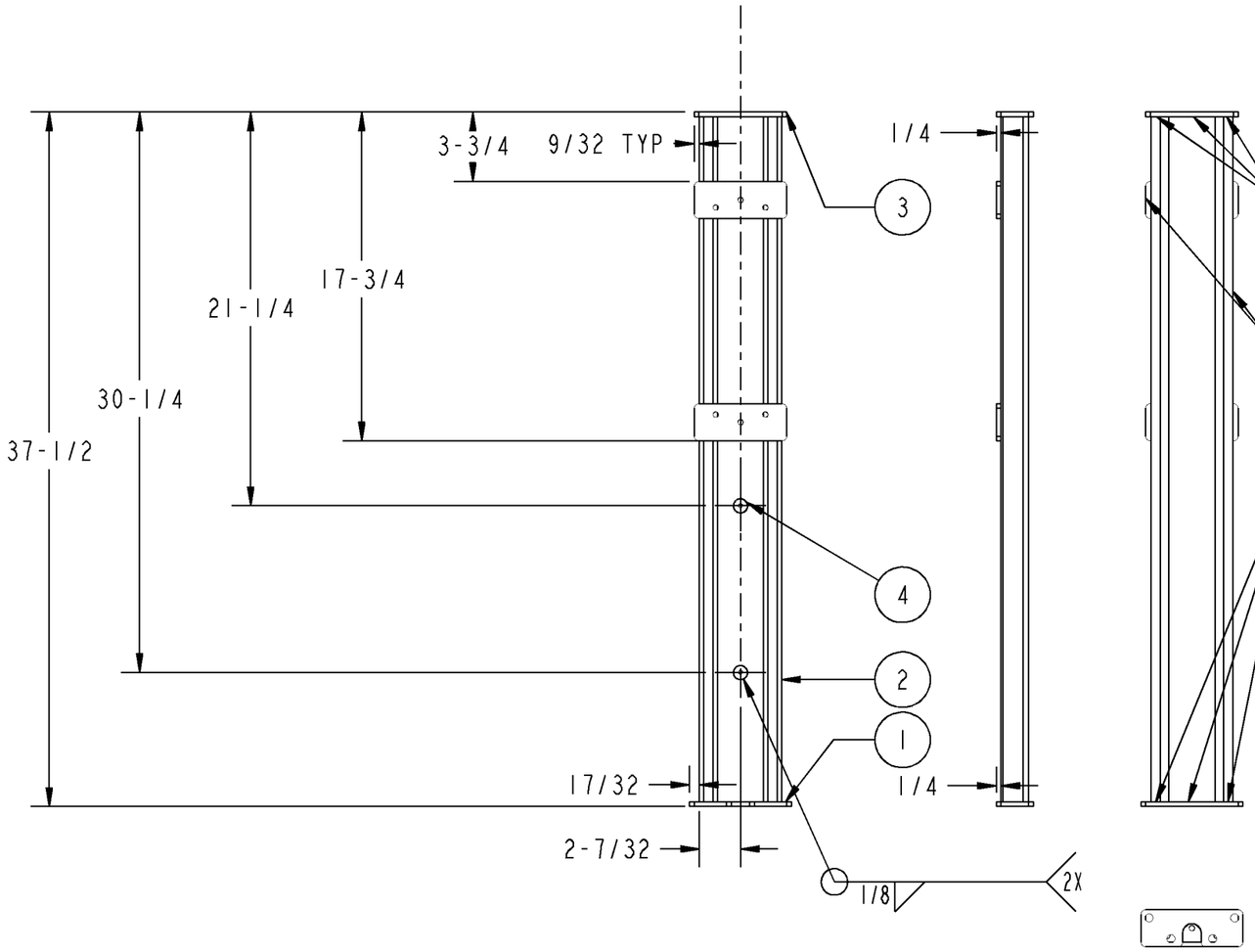

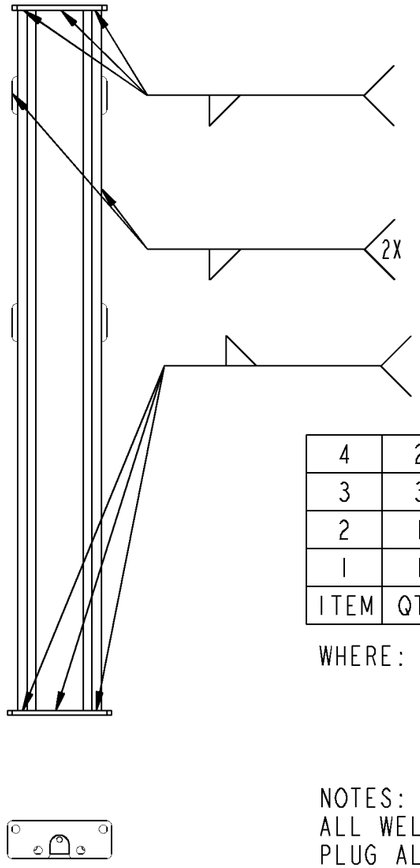

ITEM	QTY	PART NUMBER	DESCRIPTION
4	2	T313816-YY	IND-COL,J-BOX-MTG-PL
3	3	T313814-YY	IND-COL,TOP-PL
2	1	T313813YYXXXX	IND-COL,CHANNEL
1	1	T313815-YY	IND-COL,BASE-PL

WHERE: YY = CS FOR CARBON STEEL
SS FOR AISI TYPE 304SS
S6 FOR AISI TYPE 316SS
XXXX = PART LENGTH IN INCHES.

NOTES:
ALL WELDS TO BE 3/16" UNLESS OTHERWISE SPECIFIED.
PLUG ALL THREADED HOLES BEFORE BLASTING/PAINTING.
PART NUMBER DESIGNATION:
T313812-XX
WHERE: XX = ~~CS FOR CARBON STEEL (FINISH: PER TA202409)~~
~~SS FOR AISI TYPE 304SS (FINISH: PER TA202041)~~
S6 FOR AISI TYPE 316SS (FINISH: PER TA202041)

Ocotillo WRF Expansion Project
Job # 861503
Section 13466 Floor Scale and Instruments
Prepared for
Su□dt□McC□rth□□□ Jo□□t □e□ture
Provided by
Mett□r To□edo □□C

REV	CHANGE	BY	DATE
A	ADDED BOTTOM VIEW	MEB	06/30/08
B	MOVED BRACKETS/MTG-PLS UP 5"	JEB	12/09/08
C	UPDATED PICTURE FOR CHANGES TO TOP PLATE	CGG	04/14/11

SCALE 0.125
DATE 07/17/07
DRN JEB APPD JEB

METTLER TOLEDO

TITLE IND-COL,BOLT-ON,WLDMT,SS,37H

UNLESS OTHERWISE SPECIFIED, ALL DIMENSIONS ARE IN INCHES, AND DIMENSIONAL TOLERANCES ARE:
FRACTIONAL ±1/16 DECIMAL .X ±.1 .XX ±.02 .XXX ±.005 ANGULAR X ± 1° .X ±.5°

THIS PRINT IS FURNISHED WITH THE UNDERSTANDING THAT THE ESSENCE THEREOF WILL NOT BE REPRODUCED IN WHOLE OR IN PART WITHOUT WRITTEN AUTHORIZATION OF METTLER-TOLEDO, INC. ALL DESIGNS ARE THE PROPERTY OF METTLER-TOLEDO, INC. AND WILL BE PROTECTED BY PATENTS.

TA313812 REV C

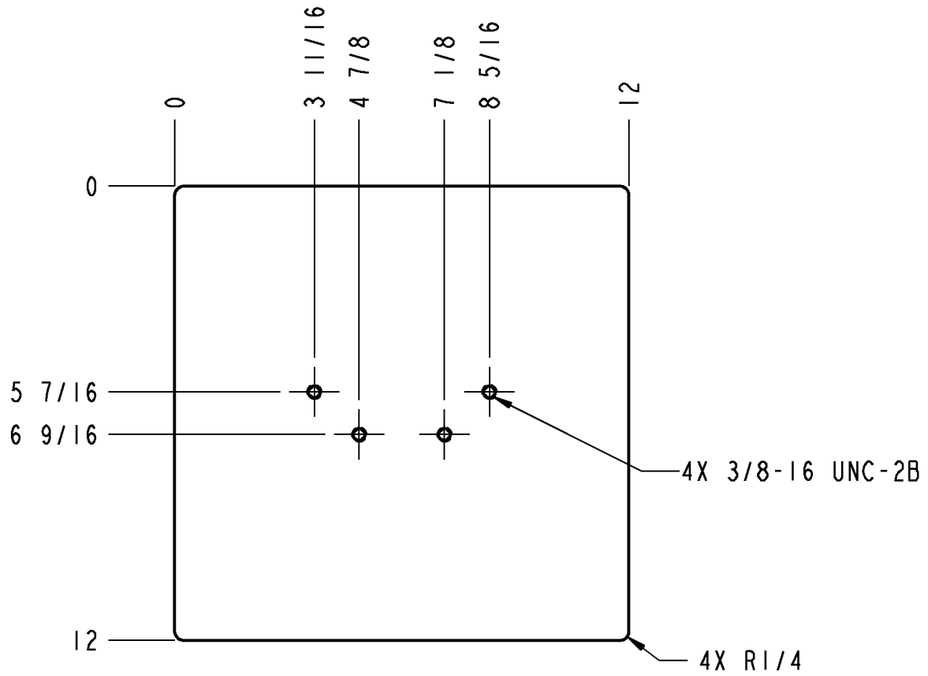

NOTES:
1. PART TO BE FREE OF SHARP EDGES.
2. DEBURR ALL HOLES.
3. CAP THREADED HOLES TO PROTECT THREADS WHILE PAINTING.

PART NUMBER SUFFIX	FINISH
~~-CS = 3/8" ASTM A36 HR CARBON STEEL~~	TA202409
~~-SS = 3/8" AISI TYPE 304 STAINLESS STEEL~~	TA202041
-S6 = 3/8" AISI TYPE 316 STAINLESS STEEL	TA202041
-CSUF = 3/8" ASTM A36 HR CARBON STEEL	--
-SSUF = 3/8" AISI TYPE 304 STAINLESS STEEL	--
-S6UF = 3/8" AISI TYPE 316 STAINLESS STEEL	--

Ocotillo WRF Expansion Project
Job # 861503
Section 13466 Floor Scale and Instruments
Prepared for
Su□dt□McC□rth□□□ Jo□□t □e□ture
Provided by
Mett□er To□edo □□C

REV	CHANGE	BY	DATE
A	ADD PAINT-THREAD NOTE	MEC	09/21/10

SCALE 0.250
DATE 11/07/08
DRN JEB APPD JEB

METTLER TOLEDO

TITLE IND-COL,STAND-ALONE,BASE-PL

UNLESS OTHERWISE SPECIFIED, ALL DIMENSIONS ARE IN INCHES, AND DIMENSIONAL TOLERANCES ARE:
FRACTIONAL ±1/16 DECIMAL .X ±.1 .XX ±.02 .XXX ±.005 ANGULAR X ± 1° .X ±.5°

THIS PRINT IS FURNISHED WITH THE UNDERSTANDING THAT THE ESSENCE THEREOF WILL NOT BE REPRODUCED IN WHOLE OR IN PART WITHOUT WRITTEN AUTHORIZATION OF METTLER-TOLEDO, INC. ALL DESIGNS ARE THE PROPERTY OF METTLER-TOLEDO, INC. AND WILL BE PROTECTED BY PATENTS.

TA207506 REV A

Project Name: Chandler Reclaimed Water Interconnect Facility
Project No. WW1901.402

Work Category: **13A - Extruded Flat Panel Covers**

Date: 4/12/2022 Rev 6/1/2022

Recommended

COMPANY INFORMATION		**Coombs Hopkins & CST**	Misco	IES Southwest		
		Jason Vernon	Dave Redman	Joel Wade		
		(602) 363-6755	(480) 415-7303	(623) 760-5720		
		jason@chcwater.com	dredman@miscowater.com	joel@iessouthwest.com		
TOTAL WORK CATEGORY PACKAGE VALUE		**$506,374**	**DECLINED**	**DECLINED**		
MCCARTHY SUBCONTRACT & FRONT END TERMS						
1	Compliant with McCarthy Front Ends	Yes				
2	Bid Submitted on McCarthy Bid Form	Yes				
3	Bid Bond Included with Bid (if over $500K Sub/$1M Supplier)	n/a				
4	Surety Company	n/a				
5	Surety AM Best Rating (Must be A- or Better)	n/a				
6	AM Best Financial Size X($500M to $750M) or higher	n/a				
7	Anticipated contract amount is less than the Federal UW Limit as listed on the Treasury Listing	n/a				
8	Bond/CDI Cost	1.295%				
9	Included Insurance Requirements (Per Matrix)	Yes				
10	GL Insurance Company Name	Navigators Specialty Insurance Company				
11	GL Insurance Carrier AM Best Rating (Must be A- or Better)	Yes				
12	PRL Insurance (If required by the Front Ends)	n/a				
13	Pollution Insurance (If required by the Front Ends)	n/a				
14	Tier 1 Approved	No				
15	Tier 2 Approved	No				
16	Safety Items:	Yes				
17	OSHA Recordable Incident Rate (Current)	n/a				
18	Agrees to comply with PPE requirements including 100% glove policy	Yes				
19	Acknowledges updated ladder policy (platform ladders)	Yes				
20	Task Hazard Analysis included for all tasks	Yes				
21	Tie-off above 6' required	Yes				
22	Includes Hoisting for Sub's Own Work Scope	n/a				
23	Acknowledges Soils Report	n/a				
24	Acknowledges Addenda	Yes				
25	Hold Bid for 180 Days	30 days				
26	Pricing good for the duration of the project	Yes				
27	Sales Tax Included	No				
28	**Market Questions**					
29	Have you experienced and/or do you anticipate any issues with existing suppliers or vendors?	No				
30	Do you have any overseas suppliers that may be impeding your supply chain?	No				
31						
32	Per Plans & Specifications	Yes				
33	Division 1 as it relates to this scope of work	Yes				
34	01010 - Summary of Work	Yes				
35	01300 - Submittals	Yes				
36	01640 - Materials and Equipment	Yes				
37	01650 - Starting of Systems	Yes				
38	01730 - Operation and Maintenance Data	Yes				
39	09900 - Painting	Yes				
40	13127 - Extruded Flat Panel Covers	Yes				
41	Division 13 - Special Construction	Yes				
42	Division 15 - Mechanical	Yes				

Project Name: Chandler Reclaimed Water Interconnect Facility
Project No. WW1901.402

Work Category: **13A - Extruded Flat Panel Covers**

Date: 4/12/2022 Rev 6/1/2022

Recommended

	COMPANY INFORMATION	Coombs Hopkins & CST	Misco	IES Southwest		
		Jason Vernon	Dave Redman	Joel Wade		
		(602) 363-6755	(480) 415-7303	(623) 760-5720		
		jason@chcwater.com	dredman@miscowater.com	joel@iessouthwest.com		
	TOTAL WORK CATEGORY PACKAGE VALUE	**$506,374**	**DECLINED**	**DECLINED**		
43	Division 16 - Electrical	Yes				
Scope of Work						
Base Bid:		$499,900				
44	Provide all labor, materials, tools, equipment and appurtenances as required to perform the Work Category 13A - Extruded Flat Panel Covers, in accordance with and reasonably inferable from the Contract Documents, complete and without exception unless otherwise noted below, including, but not limited to the following:	Yes				
45	Check to Spec completed and submitted to McCarthy	Yes				
46	Acceptable Manufacturers: **CST, Ultraflote, Hallsten**, or approved equal	CST				
47	Membrane Trains 1-4	Yes				
48	Membrane Facility Common Inlet Channel	Yes				
49	CIP Tank	Yes				
50	Cover Manufacturer must coordinate with Membrane Equipment Supplier	Yes				
51	Provide 4 integral gear hinged Access Hatches for EACH Membrane Train, full panel width. Panel components including hinges, decking, and lifting handles shall be extruded 6061-T6. Curb mounted and flashed, 3/16" thick with welded corners, seal with gasket against curb.	Yes				
52	provide gravity vents, and pipe penetrations as shown on the Drawings	Yes				
53	Submittals- Drawings and Design Calculations shall be sealed and signed by qualified Professional Engineer registered in the State of Arizona	Yes				
54	Removable panels shall not weigh more than 275 pounds. All other covers shall not exceed 150 pounds	No				
55	Materials:	Yes				
56	Bolts and Fasteners: 316 SST	Yes				
57	Structural Shapes: alloy 6061-T6, 6005a-T6, or 6063-T6 minimum 0.10 inch thick.	Yes				
58	Aluminum Extrusions: 6061-T6 alloy, mill-finished	No				
59	Closure-flashing-to-panel seals: 3/8" thick Hypalon, Santoprene, or Neoprene gaskets	Yes				
60	Closure flashing anchors and hardware: 316 SST 3/8" diameter	Yes				
61	Handrail: removable, aluminum able to prevent accidental entry into hatch opening	Yes				
62	Misc. Shapes: alloy 6061-T6, 6005A-T6, or 6063-T6	Yes				
63	Gaskets: Neoprene per ASTM C864-90, ozone resistant, and shielded from UV light.	Yes				
64	Sealants: resistant to ozone and UV light confirming to Federal Specification TT-S-00230C	Yes				
65	Anchors shall be epoxy type	Yes				
66	Nameplate: 6" x 6" max size	Yes				
67	Joints between panels: horizontal lounge and groove type	Yes				
68	Penetration Reinforcement: min 1/4" thick aluminum stiffeners, mfgs standard sealant	Yes				
69	Design Load:	Yes				
70	Dead Load: total weight of structure and all permanently attached components	Yes				
71	Live Load: 40 pounds per foot live load plus dead load	Yes				
72	Wind Load: obtained by ASCE 7-98	Yes				
73	Resistant to wind uplift	Yes				
74	Vacuum/Pressure Load: 1" water column vacuum	Yes				

Project Name: Chandler Reclaimed Water Interconnect Facility
Project No. WW1901.402

Work Category: **13A - Extruded Flat Panel Covers**

Date: 4/12/2022 Rev 6/1/2022

Recommended

	COMPANY INFORMATION	Coombs Hopkins & CST	Misco	IES Southwest		
		Jason Vernon	Dave Redman	Joel Wade		
		(602) 363-6755	(480) 415-7303	(623) 760-5720		
		jason@chcwater.com	dredman@miscowater.com	joel@iessouthwest.com		
	TOTAL WORK CATEGORY PACKAGE VALUE	**$506,374**	**DECLINED**	**DECLINED**		
75	Panel Design Load: in addition to loads mentioned above, panels shall be designed for a concentrated single load of 500 pounds on any single panel area equal to 4 square feet	Yes				
76	MBR Basin cover design:	Yes				
77	Dead Load	Yes				
78	Live Load Case 1: 100 psf downward	Yes				
79	Live Load Case 2: 65 psf upward due to seismic sloshing	Yes				
80	Live Load Case 3: 40 psf downward over entire cover plus 700 pound downward concentrated load over a 1 SF area	No				
81	Unbalanced Live Load: live loads patterned in a way to create maximum shear, moments, and deflections.	Yes				
82	Membrane Cassette Load: designed to support 4 point loads at 2,500 pounds each.	Yes				
83	Load Combinations:	Yes				
84	Dead load + live load case 1 + vacuum load	Yes				
85	Dead load + live load case 2	Yes				
86	Dead load + live load case 3 + vacuum load	Yes				
87	Dead load + unbalanced live load + vacuum load	Yes				
88	Dead load + membrane cassette load	Yes				
89	Deflections: no exceed L/240 with L equal to short span of the component	Yes				
90	Calculations stamped by Professional Engineer ensuring deflection requirements are met	Yes				
91	Temperature: load combinations shall consider temperature change of 100-degrees F below the installation temp, and 100-degree F above the installation temp, for a material temp range of -40-degrees F to 160-degrees F.	Yes				
92	Seismic Criteria: per ASCE, 7-10 Minimum Design Loads for Buildings and Other Structures	Yes				
93	Wind Loads: per ICC, and ASCE, 7-10 Minimum Design Loads for Buildings and Other Structures	Yes				
94	Connections:	Yes				
95	316 SST: allowable sheer stress- 20% of Minimum Tensile Strength as published in ASTM F593	Yes				
96	6061-T6 Aluminum: allowable sheer stress - 11 ksi	Yes				
97	7075-T73 Aluminum: allowable sheer stress - 18 ksi	Yes				
98	Installation:	n/a				
99	Skilled mechanics with supervisor experience, erected plumb, level, and in proper alignment	n/a				
100	Field Re-fabrication of structural components or panels is not acceptable	n/a				
101	Apply all sealants and gaskets per specs	n/a				
102	Warranty: 1 year from Substantial Completion	Yes				
103	Shipping shall be FOB jobsite	Yes				
104	Unloading & storage	n/a				
105	Temporary protection & enclosure	n/a				
106	Preventative maintenance	n/a				
107	O&M's per specification section 01781	Yes				
108	Delivery Lead Times: after submittal approval and released for fabrication.	shipment 20-22 weeks, installation 6-8 weeks after material arrives onsite				
109	***Escalation Moved F2 Esclation Allowance (Not Calculated in Total WC)***	$149,970				

Project Name: Chandler Reclaimed Water Interconnect Facility
Project No. WW1901.402

Work Category: **13A - Extruded Flat Panel Covers**

Date: 4/12/2022 Rev 6/1/2022

Recommended

COMPANY INFORMATION		**Coombs Hopkins & CST**	Misco	IES Southwest		
		Jason Vernon	Dave Redman	Joel Wade		
		(602) 363-6755	(480) 415-7303	(623) 760-5720		
		jason@chcwater.com	dredman@miscowater.com	joel@iessouthwest.com		
TOTAL WORK CATEGORY PACKAGE VALUE		**$506,374**	**DECLINED**	**DECLINED**		
110	COVID-19 Scope Items					
111	Proposal includes CDC, Federal, State and Local OSHA guidelines for COVID-19.	Yes				
112	Your proposal shall include all productivity, schedule, and other impacts to cost and schedule.	Yes				
113	All personnel onsite must maintain 6'0" spacing between personnel and shall have facemasks on at all times that align with CDC, Federal, State or Local OSHA guidelines for COVID-19.	Yes				
114	Any personnel reporting symptoms must be immediately reported to McCarthy and follow the appropriate testing and quarantine protocols.	Yes				
115						
116	End of Scope					
	Bond/CDI Cost	$6,474				
	TOTAL WORK CATEGORY PACKAGE VALUE	**$506,374**				

Project Name: Chandler Reclaimed Water Interconnect Facility
Project No. WW1901.402

Work Category: **13B - FRP Above Ground Storage Tanks**

Date: 4/12/2022 Rev 6/1/2022

Recommended

	COMPANY INFORMATION	**Coombs Hopkins & Daniel Company**	James, Cooke, & Hobson & Diamond Fiberglass			
		Jason Vernon	Ed Martin			
		(602) 363-6755	(602) 243-0585			
		jason@chcwater.com	egm@jchinc.com			
	TOTAL WORK CATEGORY PACKAGE VALUE	**$172,850**	**$257,224**			
	MCCARTHY SUBCONTRACT & FRONT END TERMS					
1	Compliant with McCarthy Front Ends	Yes	Yes			
2	Bid Submitted on McCarthy Bid Form	Yes	Yes			
3	Bid Bond Included with Bid (if over $500K Sub/$1M Supplier)	n/a	n/a			
4	Surety Company	n/a	n/a			
5	Surety AM Best Rating (Must be A- or Better)	n/a	n/a			
6	AM Best Financial Size X($500M to $750M) or higher	n/a	n/a			
7	Anticipated contract amount is less than the Federal UW Limit as listed on the Treasury Listing	n/a	n/a			
8	Bond/CDI Cost	1.295%	1.295%			
9	Included Insurance Requirements (Per Matrix)	Yes	Yes			
10	GL Insurance Company Name	Beazley Insurance Company, Inc	Cincinnati Casualty Company			
11	GL Insurance Carrier AM Best Rating (Must be A- or Better)	Yes	Yes			
12	PRL Insurance (If required by the Front Ends)	$2M	No			
13	Pollution Insurance (If required by the Front Ends)	n/a	n/a			
14	Tier 1 Approved	No	No			
15	Tier 2 Approved	No	No			
16	Safety Items:	Yes	Yes			
17	OSHA Recordable Incident Rate (Current)	Yes	Yes			
18	Agrees to comply with PPE requirements including 100% glove policy	Yes	Yes			
19	Acknowledges updated ladder policy (platform ladders)	Yes	Yes			
20	Task Hazard Analysis included for all tasks	Yes	Yes			
21	Tie-off above 6' required	Yes	Yes			
22	Includes Hoisting for Sub's Own Work Scope	n/a	n/a			
23	Acknowledges Soils Report	n/a	n/a			
24	Acknowledges Addenda	Yes	Yes			
25	Hold Bid for 180 Days	No	No			
26	Pricing good for the duration of the project	Yes	Yes			
27	Sales Tax Included	No	No			
28	**Market Questions**					
29	Have you experienced and/or do you anticipate any issues with existing suppliers or vendors?	No	No			
30	Do you have any overseas suppliers that may be impeding your supply chain?	No	No			
31						
32	Per Plans & Specifications	Yes	Yes			
33	Division 1 as it relates to this scope of work	Yes	Yes			
34	01010 - Summary of Work	Yes	Yes			
35	01300 - Submittals	Yes	Yes			
36	01640 - Materials and Equipment	Yes	Yes			
37	01650 - Starting of Systems	Yes	Yes			
38	01660 - Field Tests of Equipment	Yes	Yes			
39	01730 - Operation and Maintenance Data	Yes	Yes			
40	01750 - Spare Parts and Maintenance Materials	Yes	Yes			

Project Name: Chandler Reclaimed Water Interconnect Facility
Project No. WW1901.402

Work Category: **13B - FRP Above Ground Storage Tanks**

Date: 4/12/2022 Rev 6/1/2022

Recommended

	COMPANY INFORMATION	**Coombs Hopkins & Daniel Company**	James, Cooke, & Hobson & Diamond Fiberglass			
		Jason Vernon	Ed Martin			
		(602) 363-6755	(602) 243-0585			
		jason@chcwater.com	egm@jchinc.com			
	TOTAL WORK CATEGORY PACKAGE VALUE	**$172,850**	**$257,224**			
41	09900 - Painting	Yes	Yes			
42	10400 - Equipment Identification Plates	Yes	Yes			
43	11715 - Chemical Metering Pumps and Appurtenances	Yes	Yes			
44	13207 - Fiberglass Reinforced Plastic Above Ground Storage Tanks	Yes	Yes			
Scope of Work						
Base Bid:		$165,500	$251,196			
45	Provide all labor, materials, tools, equipment and appurtenances as required to perform the Work Category 13B - FRP Tanks, in accordance with and reasonably inferable from the Contract Documents, complete and without exception unless otherwise noted below, including, but not limited to the following:	Yes	Yes			
46	Check to Spec completed and submitted to McCarthy	Yes	Yes			
47	Acceptable Manufacturers: **Palmer of Texas, Paramount, Diamond Fiberglass**, or approved equal	Daniel Company	Diamond Fiberglass			
48	**TAG: TNK-SHC-001**	Yes	Yes			
49	3,200 Gallon (8' diam x 10' tall)	Yes	Yes			
50	shall have Ashland Hetron 992 resin for corrosion resistant barrier and filament winding, a double Nexus lining, and a BPO-DMA cure.	Yes	Yes			
51	**TAG: TNK-500**	Yes	Yes			
52	4,500 Gallon (9' diam x 12' tall)	Yes	Yes			
53	Shall have premium grade isophthalic polyester resin with a one "C" or synthetic veil, such as single Nexus 1012, in the 100 mil inner corrosion liner and premium grade isophthalic polyester resin in the outer structural overwrap, plus an exterior gelcoat finish with UV inhibitors (coatings applied by FRP tank mfg.)	Yes	Yes			
54	Resin shall be premium grade vinyl ester. Add antimony trioxide or pentoxide for Class I fire rating to the structural laminate only. NO thixotropic agents shall be used. (Derakane, Ashland Hetron, Interplastic, or Reichhold Dion)	Yes	Yes			
55	Design, fabrication, erection, and testing per strict accordance with ASTM D3299.	Yes	Yes			
56	Fabrication:	Yes	Yes			
57	four-layer laminate construction process or better	Yes	Yes			
58	seal all cut ends, holes, abrasions, after fabrication to prevent moisture intrusion	Yes	Yes			
59	Stainless Steel nameplates	Yes	Yes			
60	Pigmented resin for UV protection - color Tnemec Desert Sands	Yes	Yes			
61	Visual Defects shall be in accordance with ASTM D2563, Level II	Yes	Yes			
62	Design Criteria:	Yes	Yes			
63	Wind Load Design: 100 mph	Yes	Yes			
64	Live Load Design: 200 pounds per square foot	Yes	Yes			
65	Ambient Temperature: 35-degrees F min and 125-degrees F max	Yes	Yes			
66	Top Tank: Flat Top	Yes	Yes			
67	Bottom Tank: Flat Bottom	Yes	Yes			
68	Each tank to have 2 ea. 24" hinged manways with bolted cover (one on top, one on the side near tank bottom)	Yes	Yes			
69	Flanged connections for pipe connections, vents, etc., gusseted to tank wall with 1/4" thick conical gussets. Nozzle flanges shall be ANSI 150# style.	Yes	Yes			

Project Name: Chandler Reclaimed Water Interconnect Facility
Project No. WW1901.402

Work Category: **13B - FRP Above Ground Storage Tanks**

Date: 4/12/2022 Rev 6/1/2022

Recommended

	COMPANY INFORMATION	Coombs Hopkins & Daniel Company	James, Cooke, & Hobson & Diamond Fiberglass			
		Jason Vernon	Ed Martin			
		(602) 363-6755	(602) 243-0585			
		jason@chcwater.com	egm@jchinc.com			
	TOTAL WORK CATEGORY PACKAGE VALUE	**$172,850**	**$257,224**			
70	Integrally molded lifting and anchoring lugs	Yes	Yes			
71	316 SST hardware for mounting, anchoring, and connecting	Yes	Yes			
72	Provide vent for each tank	Yes	Yes			
73	Provide complete tank drain fittings below bottom elevation of the tank	Yes	No			
74	Internals and Accessories:	Yes	Yes			
75	Clear PVC Sight Glass assembly (calibrated in gallons), with diaphragm valves	$1,600	Yes			
76	Gaskets and external bolting: EPDM for testing, EPDM for Back pulse Tank service, Viton for SHC service (furnish 4 sets of gaskets per tank)	$800	Yes			
77	FRP Ladder and non-skid surfaces with roof turn - for SHC tank	Yes	Yes			
78	316 SST Ladder and non-skid surfaces with roof turn - for Back pulse tank	No - FRP	No - FRP			
79	Safety Railing around the perimeter of the top of the tanks	Yes	Yes			
80	Each Tank to have a chemical identification sign and a hazardous materials identification diamond sign in accordance with NFPA 704, and Spec Section 10400 - Equipment Identification Plates	Yes	Yes			
81	Warranty: 1-year from Substantial Completion	Yes	Yes			
82	Provide structural and anchorage calculation sealed by a registered structural engineer in the state of Arizona	$2,500	$2,500			
83	Provide all anchors and epoxy required for the installation of the equipment	$240	$240			
84	All metallic surfaces (including pipe, supports, and enclosure) shall be primed per the requirements of the 09900 - Painting	Yes	Yes			
85	Shipping shall be FOB jobsite	Yes	Yes			
86	Unloading & storage	n/a	n/a			
87	Temporary protection & enclosure	n/a	n/a			
88	Preventative maintenance	n/a	n/a			
89	O&M's per specification section 01781	Yes	Yes			
90	Spare Parts per the Specifications	Yes	Yes			
91	Delivery Lead Times: after submittal approval and released for fabrication.	12-20 weeks	TBD			
91	***Escalation Moved F2 Esclation Allowance (Not Calculated in Total WC)***	$16,550	$25,120			
92	COVID-19 Scope Items					
93	Proposal includes CDC, Federal, State and Local OSHA guidelines for COVID-19.	Yes	Yes			
94	Your proposal shall include all productivity, schedule, and other impacts to cost and schedule.	Yes	Yes			
95	All personnel onsite must maintain 6'0" spacing between personnel and shall have facemasks on at all times that align with CDC, Federal, State or Local OSHA guidelines for COVID-19.	Yes	Yes			
96	Any personnel reporting symptoms must be immediately reported to McCarthy and follow the appropriate testing and quarantine protocols.	Yes	Yes			
97						
98	End of Scope					
	Bond/CDI Cost	$2,210	$3,288			
	TOTAL WORK CATEGORY PACKAGE VALUE	**$172,850**	**$257,224**			

DIAMOND FIBERGLASS
ASME RTP-I AUTHORIZED FABRICATOR
1036 Industrial Park Dr., Victoria, Texas 77905
Phone: (361) 572-4040 • Fax: (361) 573-0451
www.diamondfiberglass.com

Quotation No. 37320

Customer: James Cooke & Hobson

Project Name: City of Chandler Project # WW1901.203

Project Location: Chandler, AZ.

Specification Section: 13207





Diamond Fiberglass
ASME RTP-1 certified facility providing composite storage tanks and process vessels.
www.diamondfiberglass.com

Fibrex Piping Services
Fabrication of Spooled FRP piping featuring the proprietary Integra-Joint TM connection system.
www.fibrex.com

Diamond Services
Field services providing on-site, turnkey non-metallic solutions
www.diamondservices.com

March 15, 2022

JAMES COOKE & HOBSON

Attn: Ed Martin
Email: ed.martin@jchinc.com
Phone: 602-243-0585 ext. 3020

Reference: City of Chandler Project # WW1901.203

Subject: FRP Equipment Proposal **37320**

SPECIAL PRICING AND DELIVERY STATEMENT – 2021 RAW MATERIAL SHORTAGE

AS OF Q1 2021, AN INDUSTRY WIDE SHORTAGE EXISTS OF KEY RAW MATERIALS NECESSARY TO FABRICATE FRP EQUIPMENT, INCLUDING RESIN AND GLASS REINFORCEMENT. IT IS UNKNOWN HOW LONG THIS SHORTAGE IS EXPECTED TO CONTINUE. RAW MATERIALS CANNOT BE PURCHASED IN ADVANCE TO LOCK IN PRICES OR SUPPLY AND ARE PRICED IN THE SPOT MARKET.

PRICING OFFERED IN THIS QUOTATION IS BASED ON THE COSTS TODAY AND LIMITED AVAILABILITY. DIAMOND WILL ADJUST THE EQUIPMENT PRICING BASED ON THE RAW MATERIAL COSTS AT THE TIME OF DELIVERY FROM OUR SUPPLIERS.

DELIVERY QUOTED IS BEST EFFORTS AND BASED ON THE SCHEDULE TODAY AND ASSUMES RAW MATERIALS SUPPLY WILL BE AVAILIBLE AT TIME OF FABRICATION. EQUIPMENT WILL BE MANUFACTURED IN THE ORDER IN WHICH IT WAS PLACED ON THE SCHEDULE AFTER CUSTOMER RELEASE TO FABRICATION.

PLEASE CHECK WITH DIAMOND TO CONFIRM IF THIS PRICING AND DELIVERY SITUATION STILL EXISTS WHEN IT IS TIME TO PLACE YOUR ORDER.

Dear Ed:

In response to the above referenced inquiry, the following FRP Equipment Proposal is provided for your purchase consideration:

Item 1: One (1) 3,200 Gallon Fiberglass 12.5% Sodium Hypochlorite Storage Tank, 8'-0" diameter by 10'-0" sidewall height, flat bottom, flat top. Tank will be fabricated with premium grade vinyl ester resin (BPO/DMA cure) and a double ply Nexus synthetic veil for the 120-mil inner corrosion liner and premium grade vinyl ester resin (MEKP cure) in the outer structural overwrap. In addition, tank will receive a desert sand exterior gelcoat with UV inhibitors and will be fit with the following nozzles and accessories:

• One (1)	Diamond Fiberglass SS nameplate
• LOT	Vessel design calculations stamped by a PE registered in the state of Arizona
• One (1)	Shop atmospheric hydrostatic leak test (2-hour hold time)
• One (1)	Shop hot-air post cure treatment (4 hours at 180°F)
• One (1)	NFPA vinyl sticker
• One (1)	Magnetic liquid level gauge
• Three (3)	2” Flanged and gusseted nozzles
• Four (4)	3” Flanged and gusseted nozzles (1 w/ siphon ell)
• One (1)	4” FRP vent with mesh screen
• One (1)	24” Top flanged hinged manway with 316SS bolting and testing gasket
• One (1)	24” Side flanged hinged manway with 316SS bolting and testing gasket
• Two (2)	Viton service gaskets
• One (1)	10’-0” Tall fiberglass caged ladder assembly

• One (1)	4’ x 4’ FRP step out platform
• One (1)	Fiberglass top mounted handrail with safety gate
• One (1)	Non-slip surface on tank top
• Eight (8)	316SS tiedown lugs (design and supply of anchor bolts by others)
• Two (2)	316SS lifting lugs

PRICE PER TANK, EX-WORKS DIAMOND FIBERGLASS, VICTORIA, TEXAS FACILITY.....$105,617.00

Item 2: One (1) 4,500 Gallon Fiberglass MFS Backpulse Storage Tank, 9'-0" diameter by 12'-0" sidewall height, flat bottom, flat top. Tank will be fabricated with premium grade fire retardant vinyl ester resin (BPO/DMA cure) and a double ply Nexus synthetic veil for the 120-mil inner corrosion liner and premium grade vinyl ester resin (MEKP cure) in the outer structural overwrap. In addition, tank will receive a desert sand exterior gelcoat with UV inhibitors and will be fit with the following nozzles and accessories:

• One (1)	Diamond Fiberglass SS nameplate
• LOT	Vessel design calculations stamped by a PE registered in the state of Arizona
• One (1)	Shop atmospheric hydrostatic leak test (2-hour hold time)
• One (1)	Shop hot-air post cure treatment (4 hours at 180°F)
• One (1)	NFPA vinyl sticker
• One (1)	Magnetic liquid level gauge
• Three (3)	2” Flanged and gusseted nozzles
• One (1)	3” Flanged and gusseted nozzles
• Two (2)	4” Flanged and gusseted nozzles (1 w/ siphon ell)
• Two (2)	16” Flanged and gusseted nozzles (1 w/ siphon ell)
• One (1)	36” Top flanged hinged manway with 316SS bolting and testing gasket
• One (1)	24” Side flanged hinged manway with 316SS bolting and testing gasket
• Two (2)	Viton service gaskets
• One (1)	12’-0” Tall fiberglass caged ladder assembly
• One (1)	4’ x 4’ FRP step out platform
• One (1)	Fiberglass top mounted handrail with safety gate
• One (1)	Non-slip surface on tank top
• Eight (8)	316SS tiedown lugs (design and supply of anchor bolts by others)
• Two (2)	316SS lifting lugs

PRICE PER TANK, EX-WORKS DIAMOND FIBERGLASS, VICTORIA, TEXAS FACILITY.....$133,963.00

TOTAL PRICE FOR ALL VESSELS, EX-WORKS DIAMOND FIBERGLASS, VICTORIA, TEXAS FACILITY.....$239,580.00

**See Quotation Validity statement below.*

FREIGHT: The above equipment is quoted EX-WORKS, Diamond Fiberglass, Victoria, Texas with freight options available upon request. **Estimated freight to the Chandler, AZ. jobsite is $11,616.00.** This is a valid estimated rate at time of quotation and subject to change without notice.

This rate is a base rate determined by the drawings and/or information supplied by the customer during the quoting process. Note that Diamond Fiberglass makes every effort to include the necessary permits, escorts, etc. typically required when quoting freight. However, if fitting additions and/or changes result in the vessel being wider or taller when loaded, additional charges may be applied to the quoted freight rate to cover any

additional permits or oversize escorts required. **Offloading at destination is by others. Detention charges subject to be applied after 2 hours of offloading wait time.**

APPROVAL DRAWINGS: General arrangement drawings for customer approval can be provided 2-3 weeks after receipt of purchase order and clarification of details. Completed shop drawings with design values will be provided after approval of the GA drawings.

PE STAMPED CALCULATIONS *(if included above)*:

If required by project and included in the above tank details, stamped calculations packages will be submitted 2-3 weeks after approval of the general arrangement drawings and clarification of details.

FABRICATION SCHEDULE: Due to current volatility in the raw material markets, Diamond Fiberglass reserves the right to update vessel pricing at any time. Validity of the quotation shall be confirmed with Diamond Fiberglass prior to execution of purchase order.

IF THIS SCHEDULE DOES NOT MEET YOUR SCHEDULE REQUIREMENTS, PLEASE LET US KNOW WHAT YOU NEED FOR YOUR PROJECT. WE WILL WORK WITH OUR PRODUCTION SCHEDULER TO MORE ACCURATELY DETERMINE IF YOUR EQUIPMENT FABRICATION NEEDS CAN BE MET WITH OUR CURRENT SHOP LOAD.

DESIGN STANDARDS AND DETAILS

1) Vessel to be designed and fabricated per ASTM 3299, ASTM 4097 and NBS PS-15-69, as applicable.
2) Vessel to be designed for seismic per ASCE 7-10 for Chandler, AZ. jobsite class D, a 1.0 specific gravity, a 108-mph wind load, atmospheric pressure, and ambient temperature.

GENERAL EXCEPTIONS & CLARIFICATIONS

1) Unless otherwise noted in this proposal, design and supply of anchor bolts is by others. Location and details of anchor lugs will be included on the drawings. Diamond Fiberglass designs utilizing the most efficient style and quantity of anchor lugs required based on the information provided. Any addition to quantity or change in style due to limitations of the foundation or anchor bolts, will result in additional cost.
2) All flanged connections will be flat-faced fiberglass flanges unless otherwise stated. Raised faced flanges are not available in fiberglass and are not recommended for use with fiberglass tanks.
3) Diamond Fiberglass' scope of work is to provide the above listed vessels and accessory equipment. All other items (including but not limited to instrumentation, plumbing, valves, installation, and field-testing services) are not included in this quotation and are by others.

FIELD SERVICES

Unless detailed above, this quotation does not include field support services. Diamond can provide field services such as installation, inspections, certifications, testing, training, start-ups, etc. for an additional fee.

SPECIFICATION SECTION 13207 EXCEPTIONS & CLARIFICATIONS

1) 1.7.C: Field test is to be by others and is not provide in this proposal.
2) 2.4.A8: Diamond Fiberglass does not recommend the use of a full drain for a bleach tank. A flange with a siphon ell has been quoted in lieu of the complete drain.
3) 2.4.B3b: Ladders, handrails, and step out platforms for both vessels are quoted as FRP for corrosion resistance.
4) 2.4.B6: Steel components are quoted as 316SS as requested in section 2.4.A6.
5) 2.5: Viton service gaskets have been provided in the proposal as requested. These are the only spare parts that pertain to FRP vessels.
6) 3.1: The installation of the tanks is to be done by others and is not provided in this proposal.

NOTE: Unless governed by previously agreed standard terms, this offer is exclusively and solely governed by Diamond Fiberglass' Standard Terms and Conditions of Sale, which is to be considered a part of this proposal.

PAYMENT TERMS: Quoted pricing is based on terms of Net 30 Days, payment in full thirty (30) days from the invoice date. **New customers and large value projects are subject to progress payment terms.**

PROGRESS PAYMENT SCHEDULE: Quoted pricing is based on terms of Net 30 Days, payment in full thirty (30) days from the invoice date.

- 25% due at drawing submittal
- 25% due at release for fabrication
- 50% due at shop completion / factory acceptance testing
- Freight upon delivery

WARRANTY: Unless otherwise agreed upon, Diamond Fiberglass standard warranty applies. This warrants the vessel free of defects in material and workmanship for a period of 12 months from initial operation or 18 months from delivery. Further information can be found in Diamond Fiberglass' Standard Terms and Conditions of Sale.

VALIDITY PERIOD: Due to current volatility in the raw material markets, Diamond Fiberglass reserves the right to update vessel pricing at any time. Validity of the quotation shall be confirmed with Diamond Fiberglass prior to execution of purchase order.

MATERIAL SURCHARGE: This quotation is subject to raw material surcharges. All Purchase Orders deriving from this quotation shall include the allowance of material surcharges.

STORAGE FEES: Diamond will store the finished vessel at our facility for up to two weeks after the vessel has been completed at no charge to the customer. After that two-week period, a storage fee will be charged of 1.5% per month of the purchase order vessel price, prorated by day to recover carrying costs. For long term storage, shrink wrapping and additional protection is available upon request for an additional price.

TAXES: Quoted pricing does not include taxes of any type.

PURCHASE ORDER PLACEMENT: To permit proper processing and coordination of details, a purchase order resulting from this proposal should be issued to:

Diamond Fiberglass
1036 Industrial Park Drive
Victoria, Texas 77905

We look forward to answering any questions you may have after reviewing this submittal and would welcome the opportunity to schedule the production of the quoted equipment at your direction. Should you have any questions or require any additional information, please contact me at (361) 572-4040.

Sincerely,



David Rogers
Project Manager


DIAMOND
FIBERGLASS
ASME RTP-1 CERTIFIED

Your business is appreciated!

If you are interested in placing an order with Diamond Fiberglass, please complete the information below, sign and return this document along with a copy of your purchase order.

The undersigned is authorized to purchase products on behalf of the company they represent.

Please check one:

☐ Yes, I would like to place an order per this quotation.

☐ Yes, I would like to place an order per this quotation with additional comments and/or requirements.

Printed Name: _____

Signature: _____

Date: _____

Why Choose Diamond Fiberglass?

DIAMOND FIBERGLASS
ASME RTP-1 AUTHORIZED FABRICATOR

01	We are RESPONSIVE.	• Always respond to customers in a prompt manner. • When a response cannot be provided quickly, communicate when it will be provided.
02	We MANAGE projects better.	• Utilize a proprietary project management system developed specifically for custom FRP equipment. • Communicate openly. • Focus on planning and meeting milestones. • Commit necessary resources at the right time to be successful.
03	We offer a COMPLETE solution for custom FRP tank and pipe equipment.	• Design. • Fabrication. • Installation. • Maintenance.

Diamond Fiberglass Standard Terms and Conditions of Sale

ARTICLE 1. DEFINITIONS

1.1 The words, "we", "our", "ours", and "us" mean the Seller. The words "you", "your" and "yours" mean the Purchaser to whom this Proposal is made. The word "Agreement" means this Proposal and your acceptance of this Proposal, and includes all documents expressly incorporated by references.

1.2 "Equipment" means an individual piece or component of the supply of the Agreement. For example, Equipment may be an individual tank or it may be a joint of pipe.

ARTICLE 2. DURATION OF PROPOSAL-EFFECT

2.1 We may withdraw this Proposal at any time until we receive your written acceptance. If we do not receive your written acceptance within 60 days of the date of this Proposal, the Proposal will expire and be void. Any changes which you wish to make to this Proposal must be expressly accepted by us in writing; otherwise those changes will be void.

ARTICLE 3. SHIPMENT AND DELIVERY

3.1 Our proposed shipping schedule depends on the date on which you accept this Proposal. If you do not provide us promptly with all drawings, information, and approvals, then you will be responsible if we fail to meet our proposed shipping schedule. We will deliver the Equipment F.O.B. Points of Shipment. This will be the only delivery which we are required to make to you. Title and risk of loss will pass to you when we make this delivery.

3.2 We agree to store the Equipment after the agreed date of completion for two weeks at no charge to you. After that two-week period, if you refuse to accept the Equipment for delivery, you agree that we may assess storage fees on the purchase in the amount of 1.5% per month x the value of the Equipment to be stored. Further you agree that we may invoice for payment of the Equipment per Section 8 below.

ARTICLE 4. TERMINATION

4.1 Once you have accepted this Proposal, you may not terminate or cancel the Agreement except by giving us written notice. If you terminate or cancel, you must pay us for our costs of labor, material, engineering, administration, and overhead incurred up to the date we received termination or cancellation charges from our vendors. If you request, we will provide you with documentation in support of these costs.

ARTICLE 5. DELAY

5.1 We will not be liable to you for loss or damage which results from delay or failure to deliver any or all of the Equipment, if this delay or failure is caused by one or more circumstances beyond our reasonable control "Force Majeure". Force Majeure includes, without limitation, acts of God, war, acts of the public enemy, civil disorder, riot, sabotage, governmental action or law or regulation, strikes or labor shortage or other labor problems, fire flood, earthquake, severe weather, health and safety considerations, embargoes, transportation shortage or delays, fuel or material shortages, failure of performance by a vendor or subcontractor, and your failure to give timely approval and comment to documents.

5.2 Our time of performance will be extended by the length of any delay caused by Force Majeure plus a reasonable time to resume our normal operations. If were are ready to ship, but shipment is delayed through no fault of ours, then the date on which we are ready to ship will be regarded as the date of shipment and delivery for all purposes, including payment. You will be responsible for the cost and risks of storage and handling.

ARTICLE 6. WARRANTY

6.1 We warrant to you that the Equipment will be delivered free from defects in material and workmanship. If you find a defect in material or workmanship during the Warranty Period (defined below), you must give us written notice within 10 days. We will either deliver to you a replacement part, F.O.B. Point of Shipment, or repair the defect in place, at our option. For international orders or orders where we are prohibited from performing the repair ourselves, we may offer, at our exclusive option, the value of our cost of repair at the Point of Shipment as remedy for the repair at the actual jobsite. The Warranty Period will expire at the earlier of the twelve (12) months from initial operation or eighteen (18) months from shipment date.

6.2 We will have no obligation to you under Section 6.1 if:

a) The Equipment is not paid for in full; or,
b) You fail to operate or maintain the Equipment in accordance with generally approved industry practice; or
c) You fail to operate or maintain the Equipment in accordance with instructions from us; or
d) You fail to give us written notice within 10 days of your discovery of a defect; or
e) The Equipment has been altered or repaired by someone other than us

6.3 This warranty excludes the following:

a) Service calls to correct the installation of the Equipment or to explain the usage of the Equipment to You; or
b) The cost removal and replacement of a defective part from the overall system, if necessary.
c) Any loss or damage which you sustain after the expiration of the Warranty Period.

6.4 We warrant to you that at delivery, the Equipment will be free of any liens or encumbrances. If there are any such liens or encumbrances, we will cause them to be discharged promptly after you have notified us of their existence. The express warranties we make to you in this Article 6 are the only warranties we will make. There are no statutory, oral, or implied warranties. In particular, there are no implied warranties or merchantability or fitness for a particular purpose. There are no statutory, oral, or implied conditions.

ARTICLE 7. LIMITATION OF LIABILITY

7.1 For the purposes of this Article 7, the words, "we", "our", "ours", and "us" mean the Seller and its employees, agents and subcontractors. Our liability to you under this Agreement or under any cause of action relating to this Agreement, whether based on contract, warranty, tort (including negligence), strict liability or otherwise, will not exceed the price of the Equipment in question. We will not be liable to you for loss of profits or revenue or business opportunity, loss by reason of shutdown of your facilities or inability to operate your facilities at full capacity, cost of obtaining other means for performing the function of the Equipment, or incidental or consequential damages of any nature.

7.2 You will have waived your right to sue us at law or in equity unless you commence your suit within one year from the date on which you sustain the loss or damage which is the subject of your suit. The provisions of this Article 7 shall prevail over any inconsistent provisions elsewhere in this Agreement.

7.3 Liquidated or performance damages are not permitted without agreement by Seller in writing and adjustment to purchase price and / or delivery estimates.

ARTICLE 8. PAYMENT

8.1 You shall receive an invoice for each purchase made, such invoice shall include the price of the item(s) purchased, date of purchase and the amount due for such purchase. You shall pay in full on or before the due date as reflected on such invoice.

8.2 Unless otherwise noted and upon credit review, the due date for each purchase shall be thirty (30) days from the invoice date. Periodically, fabrication is completed on a purchase and you are not ready for the vessel. The vessel is placed in our delivery hold stock and the invoice is processed for payment. The delivery charge is due thirty (30) days from actual delivery date.

8.3 Special payment terms could be required before order acceptance to cover C.O.D. shipments, pre-payment prior to shipment, and defined process payments for completion of engineering and drawing submittal, receipt of "buy-out" components, and certified percent of completion billing.

8.4 Late payments are subject to a 1 ½% per month fee, pro-rated daily.

8.5 All invoices are payable to Diamond Fiberglass, PO Box 65, Victoria, TX 77902.

ARTICLE 9. TAXES

9.1 You will pay all sales, use, value added, excise, and other taxes which may be levied or assessed on the transfer to the Equipment to you, or on the Agreement, or on our performance under this Agreement. Our price to you does not include taxes of any sort. You will hold us harmless and indemnity us for any taxes due and associated costs of collection that are not paid by you but determined at any point to be taxable.

ARTICLE 10. CHANGES

10.1 We will not make changes in the Equipment unless you and we have executed a written Change Order for such change. The Change Order will include the price adjustment for any added costs of the change plus a reasonable profit. If the change impairs our ability to satisfy our obligations to you, including meeting delivery schedules and performance guarantees, the Change Order will include appropriate modifications to the Agreement. If after the date of this Proposal, new or revised governmental or code requirements shall require a change in the Equipment, the change will be subject to this Article 10.

ARTICLE 11. CONFIDENTIALITY - USE OF DRAWINGS

11.1 You acknowledge that the information which we submit to you in connection with this Proposal includes our confidential and proprietary information, both of a technical and commercial nature. You will not disclose our confidential and proprietary information to third parties without our prior written consent. You will not permit any third party to fabricate components of the Equipment from our designs or drawings. You will indemnify us and hold us harmless and defend us from any claim, suit, or liability based on personal injury (including death) or property damage related to any component of the Equipment which is fabricated by a third party without our written consent.

ARTICLE 13. SECURITY INTEREST

Until all installment payments, and all other amounts due under this Agreement, have been paid, we shall retain a security interest in the Equipment and, if you sell or otherwise disposes of the Equipment in the proceeds of such sale or disposition.

ARTICLE 13. ENTIRE AGREEMENT

12.1 The Agreement contains the entire understanding between you and us, and supersedes any prior oral and written understandings between you and us concerning the Equipment, including any document which is not expressly incorporated by reference to this Agreement.

ARTICLE 14. INVALIDITY

13.1 If a final decision of a court of competent jurisdiction holds invalid a portion any sentence of this Agreement, or a sentence of any section of this Agreement, or any Article of this Agreement, the remainder of such sentence or section or this Agreement, as the case may be, shall be valid.

ARTICLE 15. GOVERNING LAW

14.1 The Agreement will be governed by and construed according to the laws of the state or province within which Seller maintains its principal office.

Project Name: Chandler Reclaimed Water Interconnect Facility
Project No. WW1901.402

Work Category: **13C - Prefabricated Metal Buildings**

Date: 4/12/2022 Rev 6/1/2022

Recommended

	COMPANY INFORMATION	Arizona Corporate Builders	Fleming West	Colton Constructors	Architectural Building Systems	The Berg Group
		Trent Patterson	Neil Barton	Grant Ballard	Michael Ohm	Chris Atwater
		(480) 967-0969	(480) 215-8208	(602) 828-1764	(602) 254-2428	(623) 582-1114
		trent@azcorporatebuilders.com	nbarton@flemingwest.com	grantb@coltonconst.com	michael@archbuildingsystems.com	catwater@berggroup.us
	TOTAL WORK CATEGORY PACKAGE VALUE	**$249,585**	**$319,384**	**DECLINED**	**DECLINED**	**DECLINED**
	MCCARTHY SUBCONTRACT & FRONT END TERMS					
1	Compliant with McCarthy Front Ends	Yes	Yes			
2	Bid Submitted on McCarthy Bid Form	Yes	Yes			
3	Bid Bond Included with Bid (if over $500k Sub/$1 Mil Supplier)	n/a	n/a			
4	Surety Company	Travelers	CDI			
5	Surety AM Best Rating (Must be A- or Better)	Yes	n/a			
6	AM Best Financial Size X($500M to $750M) or higher	Yes	n/a			
7	Anticipated contract amount is less than the Federal UW Limit as listed on the Treasury Listing	Yes	Yes			
8	Bond/CDI Cost	1.295%	1.295%			
9	Included Insurance Requirements (Per Matrix)	Yes	Yes			
10	GL Insurance Company Name	Westchester Fire	Amerasure			
11	GL Insurance Carrier AM Best Rating (Must be A- or Better)	Yes	Yes			
12	PRL Insurance (If required by the Front Ends)	Yes	Yes			
13	Pollution Insurance (If required by the Front Ends)	Yes	Yes			
14	Tier 1 Approved	Yes	No			
15	Tier 2 Approved	No	No			
16	Safety Items:	Yes	Yes			
17	OSHA Recordable Incident Rate (Current)	0	7.19			
18	Agrees to comply with PPE requirements including 100% glove policy	Yes	Yes			
19	Acknowledges updated ladder policy (platform ladders)	Yes	Yes			
20	Task Hazard Analysis included for all tasks	Yes	Yes			
21	Tie-off above 6' required	Yes	Yes			
22	Includes Hoisting for Sub's Own Work Scope	Yes	Yes			
23	Acknowledges Soils Report	n/a	n/a			
24	Acknowledges Addenda	Yes	Yes			
25	Hold Bid for 180 Days	No	Yes			
26	Pricing good for the duration of the project	No	Yes			
27	Sales Tax Included	n/a	n/a			
28	**Market Questions**					
29	Have you experienced and/or do you anticipate any issues with existing suppliers or vendors?	No	No			
30	Do you have any overseas suppliers that may be impeding your supply chain?	No	No			
31						
32	Per Plans & Specifications	Yes	Yes			
33	Division 1 as it relates to this scope of work	Yes	Yes			
34	09900 - Painting	Yes	Yes			
35	13300 - Metal Building Systems	Yes	Yes			
	Scope of Work					
	Base Bid:	$206,433	$275,340			
36	Provide all labor, materials, tools, equipment and appurtenances as required to perform the Work Category 13C- Prefabricated Metal Building, in accordance with and reasonably inferable from the Contract Documents, complete and without exception unless otherwise noted below, including, but not limited to the following:	Yes	Yes			

Project Name: Chandler Reclaimed Water Interconnect Facility
Project No. WW1901.402

Work Category: **13C - Prefabricated Metal Buildings**

Date: 4/12/2022 Rev 6/1/2022

Recommended

	COMPANY INFORMATION	Arizona Corporate Builders	Fleming West	Colton Constructors	Architectural Building Systems	The Berg Group
		Trent Patterson	Neil Barton	Grant Ballard	Michael Ohm	Chris Atwater
		(480) 967-0969	(480) 215-8208	(602) 828-1764	(602) 254-2428	(623) 582-1114
		trent@azcorporatebuilders.com	nbarton@flemingwest.com	grantb@coltonconst.com	michael@archbuildingsystems.com	catwater@berggroup.us
	TOTAL WORK CATEGORY PACKAGE VALUE	**$249,585**	**$319,384**	**DECLINED**	**DECLINED**	**DECLINED**
37	Check to Spec completed and submitted to McCarthy	No	No			
38	Bid Held for how many days	14	Yes			
39	***Escalation Moved F2 Esclation Allowance (Not Calculated in Total WC)***	$137,460.00	$0			
40	5 Year Warranty from Sub Completion	Yes	Yes			
41	35 Year Warranty on prefinished surface coatings	Yes	Yes			
42	Wall System Insulation: R Value - 19 (R-5 Min: Q/A- 46)	Yes	Yes			
43	Roof System Insulation: R Value- 30 (R-5 Min: Q/A-46)	Yes	Yes			
44	Gutter, Flashing and Downspout System	Yes	Yes			
45	Seals all Joints associated directly with the building installation	Yes	Yes			
46	Man doors	WC08A	WC08A			
47	Rollup doors	WC08B	WC08B			
48	Louvers	WC15B	WC15B			
49	Siding: PBR profile- 1.25" deep	Yes	Yes			
50	Roofing: PBR Profile (Q/A- #28)	Yes	Yes			
51	Liner - 26ga (Q/A- #29)	Yes	Yes			
52	Electrical Bldg.- no liner on ceiling on walls only (Q/A- #30)	Yes	Yes			
53	Roofing slopes to be single sloped	Yes	Yes			
54	Blower Bldg.- Pipe Support Beam w/ Engineering Carbon Steel (Q/A #37)	Yes	Yes			
55	Prime Coat all Exposed Structural Steel	Yes	Yes			
56	Electrical Bldg.- 30 PSF collateral load / Joist 300# point load (Q/A #37)	Yes	Yes			
57	Onsite supervision: Full time superintendent/safety manager	$39,961	$39,961			
58	Shop Drawings per specification requirements	Yes	Yes			
59	Design Engineer licensed in state of Arizona	Yes	Yes			
60	Meet all Design requirements as called out on Structural General Notes S-1 through S-5 in the drawings. S-5 specific load information for the Pre-Engineered Metal Building governs over the S-1 loading requirements.	Yes	Yes			
61	Perform work in accordance with AISC 360	ASC472	Yes			
62	Perform welding in accordance with AWS D1.1/D1.1M	Yes	Yes			
63	Anchor Bolts and Steel templates (Furnish Only)	Yes	Yes			
64	Framed openings for all exterior doors/louvers	Yes	Yes			
65	Provide structural and anchorage calculation sealed by a registered structural engineer in the state of Arizona	Yes	Yes			
66	Shipping shall be FOB jobsite	Yes	Yes			
67	Unloading & storage	Yes	Yes			
68	Temporary protection & enclosure	Yes	Yes			
69	COVID-19 Scope Items					
70	Proposal includes CDC, Federal, State and Local OSHA guidelines for COVID-19.	Yes	Yes			
71	Your proposal shall include all productivity, schedule, and other impacts to cost and schedule.	Yes	Yes			
72	All personnel onsite must maintain 6'0" spacing between personnel and shall have facemasks on at all times that align with CDC, Federal, State or Local OSHA guidelines for COVID-19.	Yes	Yes			
73	Any personnel reporting symptoms must be immediately reported to McCarthy and follow the appropriate testing and quarantine protocols.	Yes	Yes			
74						
75	End of Scope					
	Bond/CDI Cost	$3,191	$4,083			

Project Name: Chandler Reclaimed Water Interconnect Facility
Project No. WW1901.402

Work Category: **13C - Prefabricated Metal Buildings**

Date: 4/12/2022 Rev 6/1/2022

Recommended

COMPANY INFORMATION	**Arizona Corporate Builders**	Fleming West	Colton Constructors	Architectural Building Systems	The Berg Group
	Trent Patterson	Neil Barton	Grant Ballard	Michael Ohm	Chris Atwater
	(480) 967-0969	(480) 215-8208	(602) 828-1764	(602) 254-2428	(623) 582-1114
	trent@azcorporatebuilders.com	nbarton@flemingwest.com	grantb@coltonconst.com	michael@archbuildingsystems.com	catwater@berggroup.us
TOTAL WORK CATEGORY PACKAGE VALUE	**$249,585**	**$319,384**	**DECLINED**	**DECLINED**	**DECLINED**
TOTAL WORK CATEGORY PACKAGE VALUE	**$249,585**	**$319,384**			

FLEMING WEST

1736 S. Nevada Way
Mesa, AZ 85204
(480) 951-5301

March 25, 2022

McCarthy Building Companies
Attn: Nicole Azuri
6225 N 24th St, 200
Phoenix, AZ 85016

Re: Chandler Reclaimed Water Interconnect Facility

Fleming West is pleased to provide this budget proposal to furnish building materials, labor, and equipment necessary to construct **(1) 25' x 45' x 10' @ L.S, (1) 10'-8" x 42' x 11" @ L.S. PEMB** Butler buildings.

This proposal is based on the information supplied in the emails dated 3-4-22.

DESIGN CRITERIA/BUILD

- Building Code: IBC18
- Use Category: II (Standard Occupancy Structure)
- Live Load: 20 psf (non-reducible)
- Roof Snow Load: 0 psf
- Collateral Load: 5 psf
- Wind Load/Speed: 102 MPH
- Exposure Factor: B
- Seismic Loads: Ss= 17.8 %, S1=6.5 %
- Factory Mutual: Not Required
- Special Loading: N/A

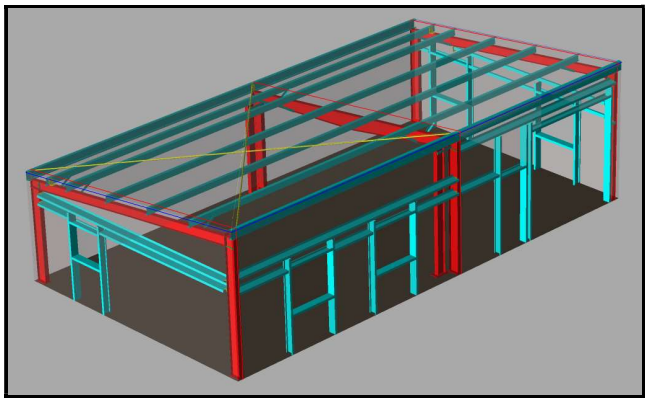

Blower Room

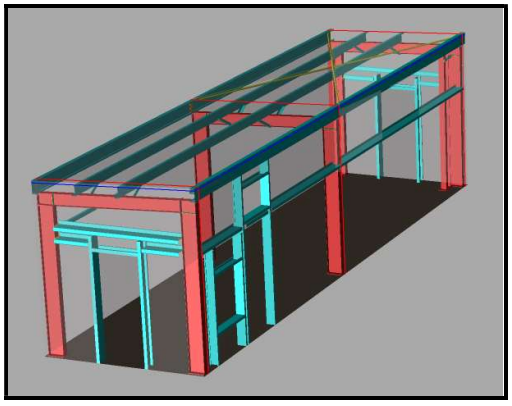

Electrical / PLC Room

SCOPE OF WORK

STRUCTURE

- Provide and install (1) **Blower Room** - 25’ wide x 45’ long x 10’ eave height @ (LS) by Butler Manufacturing.
    - (1) bay @ 20’, (1) bay @ 25’, (1) EW section @ 25’ (see sketch above).
- Provide and install (1) **Electrical / PLC Room** - 10’-8” wide x 42’ long x 11’ eave height @ (LS) by Butler Manufacturing.
    - (1) bay @ 20’, (1) bay @ 22’, (1) EW section @ 10’-8” (see sketch above).
- Provide steel building system drawings, calculations and anchor bolt plans stamped by an Arizona registered engineer.
- All primary and secondary structural steel will have a primer paint. The primer paint is to protect the steel for shipping purposes only. The primer is not to be used as a primer for a finish painted product. It will be scratched during the building erection process.
- Structure shall be comprised of primed painted rigid frame primaries, wind posts, and roof x-rod bracing, G30 zee shaped roof purlins and G30 zee shaped wall girts.
    - All brace rods have been removed from end and side walls and replaced with wind post to eliminate mechanical opening conflicts.
- Galvanized anchor bolts and templates for column base plates.

ROOFING

- Exterior roof panels shall be the MR-24 roof system as provided by Butler Manufacturing. Panel material shall be 24” wide standing seam roof with spacer blocks. Panel material shall be 24-gauge with a Kynar 500 painted finish in a standard color as provided by the manufacturer.
- Standing Seam MR-24 roofing system required due to the insulation thickness specified at R30.
    - Please be advised that the specification identified corrugated metal panels.

WALL SHEETING

- Exterior wall panels shall be Shadowall™ wall panel (reverse R panel) system as provided by Butler Manufacturing. Panel material shall be 36” wide with 1½” corrugations and semi-concealed fasteners. Panel material shall be 26-gauge with a Kynar 500 painted finish in Standard color as provided by the manufacturer.

INSULATION

- Roof insulation R-30 (9 ¼”) double layer blanket insulation with reinforcing facing.
- Wall insulation R-19 (6”) single layer blanket insulation with reinforcing facing.

WALL ACCESSORIES

- Provide (1) 3’ x 7’ personnel door framed opening (door by others) **Blower Room**
- Provide (1) 3’6” x 3’ duct framed opening (duct by others) **Blower Room**
- Provide (4) 4’6’ x 4’ louver framed openings (louver by others) **Blower Room**
- Provide (1) 10’ x 10’ overhead door opening (doors by others) **Blower Room**
- Provide (2) 3’ x 7’ personnel door framed opening (door by others) **Electrical / PLC Room**
- Provide (1) 3’6” x 3’6” duct framed opening (duct by others) **Electrical / PLC Room**
- Provide (1) 3’6” x 2’ duct framed opening (duct by others) **Electrical / PLC Room**

TRIM & GUTTERS

- Gable trim, eave trim, standard gutter, and downspouts for all eave conditions. Materials shall have a Kynar 500 painted finish in a standard color as provided by the manufacturer.

WARRANTY

- Butler Manufacturing to provide the following material warranties:
  5-year Material and Workmanship

Total Price Base: $157,575.00 (excludes Sales Tax)

CLARIFICATIONS

- The proposal is valid for (21) days
- At time of order entry, a ship date will be established.
- The proposal has been based on (1) mobilization with an uninterrupted erection of materials.
- Fleming West, LLC safety program is based on the latest Arizona State OSHA regulations. Labor, material and equipment costs for any additional safety requirements not specifically agreed to prior to quoting the work will need to be added by contract modification before start of work. Fleming West will not be responsible for the safety practices of other trades or provide safety measures for their use.
- The standard work week is 40-hours, 4 days at 10 hours per day or 5 days at 8 hours, Monday through Friday between the hours of 5am and 5pm.
- All concrete foundations must be ready, cleared, a ramp set, and anchor bolts clean with (1) nut and (1) washer on each bolt prior to Fleming West's erection crews arriving on the job site.
- The GC shall provide an unobstructed and level access for a minimum of 50' around the full perimeter of building and floor slab for labor, materials and equipment.
- Fleming West requires a material "lay down" area within 100' of where the materials are to be erected.
- OSHA Subpart R requires a steel erector to do the following before being authorized to start the steel erection:
  - All anchor bolts must be verified in correct locations and all concrete clear of any debris
  - Verification that sufficient concrete strength has been attained to support the loads imposed during steel erection
  - Commence only after written notification is received by GC
- Owner's risk by others.
- The net price is based on the Manufacturer's standard products and details unless specifically included above.
- This proposal does not comply with NAFTA or the Buy American or Buy America or FM Global Provisions. If any of these are a requirement of this project the proposal price will have to be revised.
- The protection of stored materials delivered to the construction site shall be the responsibility of the GC
- Clean-up construction debris and place it at an onsite location designated by GC
- Temporary power to be provided by GC
- If GC requires cranes for installation of the steel or special tire coverings for the forklifts to protect the concrete slab, this must be communicated and included in the scope of work.

EXCLUSIONS

- Sales tax
- 35 Year manufactures warranty
- Eagle Eye Bird & propeller bird deterrents
- Acoustical roof or wall panels
- Roof or wall metal liner panels
- NO Galvanizing of any steel members unless other noted
- Metal Mesh: galvanized steel wire, woven
- Liquidated damages
- Payment and Performance Bonds
- Overhead doors
- Any inspections including, but not limited to bolt, weld, pre, post and during construction

- BIM, Rivet modeling/detailing or any electronic modeling
- SWPP, dust control, track out, toilets, dumpsters and haul off
- Provisions for Davis-Bacon or other special labor range rates
- Anchor bolt design into concrete
- Access ladders, roof hatches, roof curbs, Deck-tites for roof penetrations, and/or skylights
- Cleaning or touch up of steel
- All concrete and drypack (grout)
- Roof vents; Roof Exhaust Fans; HVAC loading of any kind
- Wind locks on overhead doors

We appreciate the opportunity to earn your business. Feel free to contact me with any questions. I look forward to following up with you on this proposal.

Best regards,

Aaron E. Wolf

Fleming West

Project Name: Chandler Reclaimed Water Interconnect Facility
Project No. WW1901.402

Work Category: **13D - Wet Pipe Fire Extinguishing System**

Date: 4/12/2022 Rev 6/1/2022

Recommended

	COMPANY INFORMATION	Western States Fire Protection	Arizona Verde Fire Protection	Foothills Fire	Aero Automatic	RCI Systems
		Mark Lopez	Wade Green	Kevin Huennekens	Tammy Milam	Jeff Little
		(480) 298-7228	(602) 278-1111	(480) 951-3434	(623) 580-7800	(480) 894-8711
		mark.lopez@wsfp.us	wade.green@avfp.us	kevinh@foothillsfire.com	tmilam@aerofire.com	jlittle@rcifire.com
	TOTAL WORK CATEGORY PACKAGE VALUE	**$25,848**	**$28,768**	**DECLINED**	**DECLINED**	**DECLINED**
	MCCARTHY SUBCONTRACT & FRONT END TERMS					
1	Compliant with McCarthy Front Ends	Yes	Yes			
2	Bid Submitted on McCarthy Bid Form	Yes	Yes			
3	Bid Bond Included with Bid (if over $500k Sub/$1 Mil Supplier)	n/a	n/a			
4	Surety Company	Pacific Indemnity	Western National			
5	Surety AM Best Rating (Must be A- or Better)	Yes	Yes			
6	AM Best Financial Size X($500M to $750M) or higher	Yes	Yes			
7	Anticipated contract amount is less than the Federal UW Limit as listed on the Treasury Listing	Yes	Yes			
8	Bond/CDI Cost	1.295%	1.295%			
9	Included Insurance Requirements (Per Matrix)	Yes	Yes			
10	GL Insurance Company Name	Zurich American	Everest Indemnity			
11	GL Insurance Carrier AM Best Rating (Must be A- or Better)	Yes	Yes			
12	PRL Insurance (If required by the Front Ends)	Yes	Yes			
13	Pollution Insurance (If required by the Front Ends)	Yes	Yes			
14	Tier 1 Approved	Yes	Yes			
15	Tier 2 Approved	No	No			
16	Safety Items:					
17	OSHA Recordable Incident Rate (Current)	1.08	0.0			
18	Agrees to comply with PPE requirements including 100% glove policy	Yes	Yes			
19	Acknowledges updated ladder policy (platform ladders)	Yes	Yes			
20	Task Hazard Analysis included for all tasks	Yes	Yes			
21	Tie-off above 6' required	Yes	Yes			
22	Includes Hoisting for Sub's Own Work Scope	Yes	Yes			
23	Acknowledges Soils Report	n/a	n/a			
24	Acknowledges Addenda	Yes	Yes			
25	Hold Bid for 180 Days	Yes	Yes			
26	Pricing good for the duration of the project	No	No			
27	Sales Tax Included	No	No			
28	**Market Questions**					
29	Have you experienced and/or do you anticipate any issues with existing suppliers or vendors?	No	Yes			
30	Do you have any overseas suppliers that may be impeding your supply chain?	No	Yes			
31						
32	Per Plans & Specifications	Yes	Yes			
33	Division 1 as it relates to this scope of work	Yes	Yes			
34	01010 - Summary of Work	Yes	Yes			
35	01300 - Submittals	Yes	Yes			
36	01640 - Materials and Equipment	Yes	Yes			
37	01650 - Starting of Systems	Yes	Yes			
38	01660 - Field Tests of Equipment	Yes	Yes			
39	01730 - Operation and Maintenance Data	Yes	Yes			
40	01750 - Spare Parts and Maintenance Materials	Yes	Yes			
41	01821 Instruction of Operations and Maintenance Personnel	Yes	Yes			
42	07900 - Joint Sealers	Yes	Yes			

Project Name: Chandler Reclaimed Water Interconnect Facility
Project No. WW1901.402

Work Category: **13D - Wet Pipe Fire Extinguishing System**

Date: 4/12/2022 Rev 6/1/2022

Recommended

	COMPANY INFORMATION	Western States Fire Protection	Arizona Verde Fire Protection	Foothills Fire	Aero Automatic	RCI Systems
		Mark Lopez	Wade Green	Kevin Huennekens	Tammy Milam	Jeff Little
		(480) 298-7228	(602) 278-1111	(480) 951-3434	(623) 580-7800	(480) 894-8711
		mark.lopez@wsfp.us	wade.green@avfp.us	kevinh@foothillsfire.com	tmilam@aerofire.com	jlittle@rcifire.com
	TOTAL WORK CATEGORY PACKAGE VALUE	**$25,848**	**$28,768**	**DECLINED**	**DECLINED**	**DECLINED**
43	13930 - Wet Pipe Fire Extinguishing System	Yes	Yes			
44	15140 - Supports and Anchors	Yes	Yes			
45	15400 - Plumbing Fixtures and Equipment	Yes	Yes			
Scope of Work						
Base Bid:		$24,518	$27,400			
46	Provide all labor, materials, tools, equipment and appurtenances as required to perform the Work Category 13D - Wet Pipe Fire Extinguishing System, in accordance with and reasonably inferable from the Contract Documents, complete and without exception unless otherwise noted below, including, but not limited to the following:	Yes	Yes			
47	Check to Spec completed and submitted to McCarthy	Yes	Yes			
48	1 year warranty from Final Acceptance	Yes	Yes			
49	Bid Held for how many days	180 days	180 days			
50	Cost Adder to hold to 180 days	n/a	n/a			
51	All work provided shall be manufactured, installed, and tested in accordance the latest standard of NFPA 13	Yes	Yes			
52	Correct piping material as specified in spec section 13930 section 2.2 Piping Materials	Yes	Yes			
53	Provide all necessary equipment as stated in spec section 13930 section 2.3 Equipment	Yes	Yes			
54	Include fire department connection	Yes	No			
55	BIM coordination	Yes	No			
56	Exclude painting pipes	WC 09A	WC 09A			
57	Connect to 6" fire protection main on the interior of building for fire riser as seen on C-1.22	Yes	Yes			
58	Furnish and install fire risers in accordance with C.O.C. standard detail FD144	Yes	Yes			
59	Includes P.E. stamped fire sprinkler system shop drawings and permit costs for the City of Chandler	Yes	Yes			
60	Exclude fire alarm system with control panel	WC 16A	WC 16A			
61	Exclude all interconnection wiring between equipment control panels and fire alarms	WC 16A	WC 16A			
62	Provide all anchors and epoxy required for the installation of the equipment	Yes	Yes			
63	Exclude Electrical Building	Yes	Yes			
64	Provide (5) fire alarm signs near each fire alarm bell	$1,000	$1,000			
65	O&M's per specification section 01730	Yes	Yes			
66	Training: per the Spec	Yes	Yes			
67	Performance testing: Per Spec	Yes	Yes			
68	Testing days/trips included:	1 day	1 day			
69	COVID-19 Scope Items					
70	Proposal includes CDC, Federal, State and Local OSHA guidelines for COVID-19.	Yes	Yes			
71	Your proposal shall include all productivity, schedule, and other impacts to cost and schedule.	Yes	Yes			
72	All personnel onsite must maintain 6'0" spacing between personnel and shall have facemasks on at all times that align with CDC, Federal, State or Local OSHA guidelines for COVID-19.	Yes	Yes			
73	Any personnel reporting symptoms must be immediately reported to McCarthy and follow the appropriate testing and quarantine protocols.	Yes	Yes			
74						
75	End of Scope					

Project Name: Chandler Reclaimed Water Interconnect Facility
Project No. WW1901.402

Work Category: **13D - Wet Pipe Fire Extinguishing System**

Date: 4/12/2022 Rev 6/1/2022

Recommended

COMPANY INFORMATION	**Western States Fire Protection**	Arizona Verde Fire Protection	Foothills Fire	Aero Automatic	RCI Systems
	Mark Lopez	Wade Green	Kevin Huennekens	Tammy Milam	Jeff Little
	(480) 298-7228	(602) 278-1111	(480) 951-3434	(623) 580-7800	(480) 894-8711
	mark.lopez@wsfp.us	wade.green@avfp.us	kevinh@foothillsfire.com	tmilam@aerofire.com	jlittle@rcifire.com
TOTAL WORK CATEGORY PACKAGE VALUE	**$25,848**	**$28,768**	**DECLINED**	**DECLINED**	**DECLINED**
Bond/CDI Cost	$330	$368			
TOTAL WORK CATEGORY PACKAGE VALUE	**$25,848**	**$28,768**			

Arizona Verde Fire Protection
Protecting Lives and Property
POWERED BY API Group

WSFP.COM
(O) 602-278-1111 | (F) 602-278-1114
3115 N. 29th Drive | Phoenix, AZ 85017
License #: ROC 177239 C-16

March 24, 2022

GMP2

Attn: Austin Hancock @ McCarthy

RE: Chandler RWIF – Blower Building
Chandler, AZ

Arizona Verde Fire Protection (AVFP) is pleased to submit a quote for the above listed project. Included in this price are all equipment, labor and material required to install wet piped fire sprinkler systems in new 1,125 sq. ft. Blower building, starting at 6" A.F.F, per GMP plans by Wilson Engineers. Authority having jurisdiction is the City of Chandler. Specs were viewed. Addendum 1 acknowledged.

Scope of Work:

- **Fire sprinkler design, shop drawings and submittals**
- **Fire sprinkler permits & fees**
- **Fire Hydrant flow test**
- **Foreign & Domestic materials**
- **Work to begin at first flange above finished floor**
- **Complete fire sprinkler riser with electric bell, tamper, and flow switch (wired by others)**
- **Backflow prevention device in risers with forward flow test connections**
- **Spare sprinkler cabinet, spare sprinklers, and head wrenches**
- **Pipe stands, supports, braces, and hangars, per NFPA 13**
- **All pipe to be black steel with a CRR of 1.0 or greater**
- **Semi-recessed chrome pendent sprinklers (0)**
- **Brass upright sprinklers (Blower 12, + 4 below duct)**
- **Core drilling & sleeving**
- **Fire stopping and sealing penetrations**
- **Hoisting and rigging of material**
- **Provide daily clean-up and housekeeping**
- **Tagging and identification of all valves**
- **Testing and inspecting of all systems**
- **Closeout documents, warranties, as-builts, and O&Ms**

Not included in Scope of Work:

- **Any sales tax or bonds**
- **Electrical Building**
- **Any BIM design and coordination**
- **Building mounted Fire Department Connections (FDC) Not required due to size of buildings**
- **Any dry or chemical type systems**
- **Any alarms, alarm panels, horns, or strobes**
- **Any electrical wiring or hook-ups**
- **Any painting of pipe or masking off sprinklers or pipe**
- **Any fire extinguishers or cabinets**
- **Any underground fire loop and/or hydrants**

System Design:

- **Building Construction: Non-Combustible as defined by NFPA 13**
- **Blower Building – Ordinary Hazard Group 2: 20 GPM over 1500 sq. ft. with a 250 GPM hose allowance, 130 sq. ft. per sprinkler**
- **Assumed water supply is adequate for new building, no fire pump or stored water needed**

Blower Building: $27,400.00

Installation and approved plans will be per NFPA 13 and the City of Chandler requirements. CAD files are to be made available at no cost for AVFP's use for design.

This quote is based upon work being performed during standard business hours. Any overtime work will be an extra to the contract.

This job will be installed in a quality craftsmanship-like manner by qualified sprinkler fitters.

AVFP is to be paid for the work as outlined herein, in monthly installments of 90% of work completed and material stored on site; net 30 days. The 10% retention shall be paid upon substantial completion of work.

Thank you for considering Arizona Verde Fire Protection for this project.

Submitted by:

Wade Green (via email)
Wade Green, Estimator/Project Manager
Arizona Verde Fire Protection
Cell 623-764-6855

Accepted by:

_____

_____
(Print Name and Company)

Note: This quote is **valid for 30 days**, after which it is subject to change.

Project Name: Chandler Reclaimed Water Interconnect Facility
Project No. WW1901.402

Work Category: **14A - Bridge Crane**

Date: 4/12/2022 Rev 6/1/2022

Recommended

	COMPANY INFORMATION	**Konecranes Inc**	Hoist Systems	Ace Industries		
		Justyn Penfold	Jeff Sanuik	Mike Browne		
		602-541-3379	602-254-9333	602-622-2441		
		justyn.penfold@konecranes.com	jeff@hoistsystems.com	michael.browne@aceindustries.com		
	TOTAL WORK CATEGORY PACKAGE VALUE	**$194,613**	**$214,543**	**No Bid**		
	MCCARTHY SUBCONTRACT & FRONT END TERMS					
1	Compliant with McCarthy Front Ends	No	No			
2	Bid Submitted on McCarthy Bid Form	No	No			
3	Bid Bond Included with Bid (if over $500k Sub/$1 Mil Supplier)	n/a	n/a			
4	Surety Company	n/a	n/a			
5	Surety AM Best Rating (Must be A- or Better)	n/a	n/a			
6	AM Best Financial Size X($500M to $750M) or higher	n/a	n/a			
7	Anticipated contract amount is less than the Federal UW Limit as listed on the Treasury Listing	n/a	n/a			
8	Bond/CDI Cost	1.295%	1.295%			
9	Included Insurance Requirements (Per Matrix)	No	Yes			
10	GL Insurance Company Name	ACE American	Kinsale			
11	GL Insurance Carrier AM Best Rating (Must be A- or Better)	Yes	Yes			
12	PRL Insurance (If required by the Front Ends)	No	Yes			
13	Pollution Insurance (If required by the Front Ends)	n/a	n/a			
14	Tier 1 Approved	Yes	Yes			
15	Tier 2 Approved	n/a	n/a			
16	Safety Items:	Yes	Yes			
17	OSHA Recordable Incident Rate (Current)	1.45	1.23			
18	Agrees to comply with PPE requirements including 100% glove policy	Yes	Yes			
19	Acknowledges updated ladder policy (platform ladders)	Yes	Yes			
20	Task Hazard Analysis included for all tasks	Yes	Yes			
21	Tie-off above 6' required	Yes	Yes			
22	Includes Hoisting for Sub's Own Work Scope	Yes	Yes			
23	Acknowledges Soils Report	n/a	n/a			
24	Acknowledges Addenda	Yes	No			
25	Hold Bid for 180 Days	No	No			
26	Pricing good for the duration of the project	No	No			
27	Sales Tax Included	n/a	n/a			
28	**Market Questions**					
29	Have you experienced and/or do you anticipate any issues with existing suppliers or vendors?	Yes	Yes			
30	Do you have any overseas suppliers that may be impeding your supply chain?	Yes	Yes			
31						
32	Per Plans & Specifications	Yes	Yes			
33	Division 1 as it relates to this scope of work	Yes	Yes			
34	05120 - Structural Steel and Framing	Yes	Yes			
35	09900 - Painting	Yes	Yes			
36	14360 - Hoists, Trolleys, Monorails	Yes	Yes			
37	Div. 16 - Electrical	Yes	Yes			
	Scope of Work					
	Base Bid:	$162,125	$156,800			

Project Name: Chandler Reclaimed Water Interconnect Facility
Project No. WW1901.402

Work Category: **14A - Bridge Crane**

Date: 4/12/2022 Rev 6/1/2022

Recommended

	COMPANY INFORMATION	**Konecranes Inc**	Hoist Systems	Ace Industries		
		Justyn Penfold	Jeff Sanuik	Mike Browne		
		602-541-3379	602-254-9333	602-622-2441		
		justyn.penfold@konecranes.com	jeff@hoistsystems.com	michael.browne@aceindustries.com		
	TOTAL WORK CATEGORY PACKAGE VALUE	**$194,613**	**$214,543**	**No Bid**		
38	Provide all labor, materials, tools, equipment and appurtenances as required to perform the Work Category - 14A Bridge Crane, in accordance with and reasonably inferable from the Contract Documents, complete and without exception unless otherwise noted below, including, but not limited to the following:	Yes	Yes			
39	Check to Spec completed and submitted to McCarthy	No	No			
40	Number of Days Bid Held	3/30/22	120 days			
41	***Escalation Moved F2 Esclation Allowance (Not Calculated in Total WC)***	$12,544	$12,544			
42	Bridge Crane Rails	Yes	Yes			
43	Bridge Crane Beam	WC05A	WC05A			
44	1 Year Warranty from Substantial Completion	Yes	Yes			
45	Manufacture (Demag / Konecranes / R&M Material/ OE)	Konecranes	R&M Materials			
46	Hoisting for Installation of Bridge Crane	Yes	Yes			
47	Hoist w/ Class C Services	Yes	Yes			
48	LCD Crane Status Update Display	No	No			
49	5 Ton Capacity	Yes	Yes			
50	Ambient Temp of 120F Max- 40 Min	Yes	Yes			
51	Humidity: 100%	Yes	No, 90%			
52	Crane Motor: Class H insulation/ 55F rise over 60 F ambient	Yes	$50,000			
53	Truck Ends Supplied	WC 05A	Yes			
54	Trolley - Min B-10 bearing life of 5000 hrs.	Yes	Yes			
55	Recertification of Bridge Crane Prior to Sub Completion	Yes	$5,000			
56	NEMA 4x Enclosure for control panel	UL Rated	Yes			
57	Hoist Limit Switch	Yes	Yes			
58	Bridge Crane Electrification	Yes	Yes			
59	Manufactures Service Testing	Yes	Yes			
60	Acceptance Testing	Yes	Yes			
61	Lead Time: From Approved Submittals	23-25 wks.	10-12 wks.			
62	Professional Liablity Insurance	$30,000	Yes			
63	COVID-19 Scope Items					
64	Proposal includes CDC, Federal, State and Local OSHA guidelines for COVID-19.	Yes	Yes			
65	Your proposal shall include all productivity, schedule, and other impacts to cost and schedule.	Yes	Yes			
66	All personnel onsite must maintain 6'0" spacing between personnel and shall have facemasks on at all times that align with CDC, Federal, State or Local OSHA guidelines for COVID-19.	Yes	Yes			
67	Any personnel reporting symptoms must be immediately reported to McCarthy and follow the appropriate testing and quarantine protocols.	Yes	Yes			
68						
69	End of Scope					
	Bond/CDI Cost	$2,488	$2,743			
	TOTAL WORK CATEGORY PACKAGE VALUE	**$194,613**	**$214,543**			

MMI Hoist Systems, Inc.

OVERHEAD CRANES AND HOISTS
1042 SOUTH LEWIS • MESA, AZ 85210
PH: (602) 254-9333 • FAX: (602) 254-5233

Chandler RWIF
5 Ton Capacity
Top Running
Double Girder
Bridge Crane

M□rch □□□□□□□

McC□rth□ □u□d□□□ Co□p□□□es
□□□□ □ □□th St U□□T □□□
Phoe□□□□□ □□□□□

□tt□□ □□co□e □□ur□

Pursu□□t to □our re□uest □or □propos□□□or □ □to□ c□p□c□t□□top ru□□□□□ DOU□□□ □rder o□erhe□d □r□d□e cr□□e s□ste□ □st□□ed □t the Ch□□d□er RW□□ □c□t□□we o□□er the □o□ow□□□ □or □our co□s□der□t□o□□

Bridge

- Sp□□□ □□'□□" □□ppro□□□
- Top Ru□□□□□ Dou□□e □rder
- CM□□ Dut□ C□c□e□ C
- □□□ □PM□□□r□□□□e □re□ue□c□ Dr□□e
- □□M□ □□ Protect□o□s □Outdoor□U□der Co□er□
- □estoo□ □□ectr□□c□t□o□

Hoist

- □□□□□□ □□□C□p□c□t□ R□M W□re Rope Ho□st
- □□' – □ □" □□□□□□□e □t □ □□ □□d □ □PM
- Ho□st Dut□ □roup□ H□

Trolley

- U□derhu□□ □ow He□droo□ Tro□e□
- □□ □PM – □□r□□□e □re□ue□c□ Dr□□e

Voltage

- □□□□ □□Ph □□□H□
- □□□ □o□t Co□tro□

Control

- R□d□o Re□ote Co□tro□ w□th sp□re tr□□s□tter
- □□C□□UP□ □□depe□de□t tr□□e□□□ push□utto□ st□t□o□

Miscellaneous

- M□□u□□□□d M□□□et□c D□sco□□ect
- Motor □uses □□d Ther□ □□O□er□o□ds
- Upper □ □ower □e□red □□□ t□Sw□tches

Runway System

- Ru□w□□ □e□□s □□d □u□d□□□ Co□u□ □Support Structure □□ OW□□R **(Steel Subcontractor)**
- □□' □0" o□□□□ □□SC Ru□w□□ R□□□□ H□rdw□re
- Ru□w□□ □□dstops

Runway Electrification

- □□' □0" o□□ □conductor "Duct□O□Bar" □□□ □MP ru□w□□ co□ductor with □□□□ ou□t□□ h□rdw□re□
- T□□de□ Co□ector Shoe □sse□ □□es

Installation

- Str□□ht t□□ e r□tes dur□□ re□u□r wor□□□ hours □□ □ c□e□r wor□ □re□ with □o □terrupt□o□s□
- Oper□t□o□ □□d M□□□te□□□ce M□□u□s
- C□e□□□up of Hoist Systems' generated debris.

Specific Exclusions

- T□□es□□o□ds□per□ □ts□□ees
- □□□out □or other tr□des
- Wee□e□d□□ □ht□Ho□d□□ Wor□□□cce□er□ted Schedu□e
- C□e□r □ccess to jo□s□te□□de□u□te □□dow□ □re□ □ssu□ed
- □□u□d□ted D□□ □□es
- Costs □or de□□s cre□ted □□ other tr□des
- □□e□d Des□□□□ □□□□eer□□□
- "Primary and Non□Contributory" provision and/or Waiver of Subrogation/Additional Insured e□dorse□ e□ts o□ □sur□□ce co□er□□e

Load Test & Start-up

- □o□d Test □t □□□□ o□r□ted c□p□c□t□□
- □o□d Test cert□□c□tes

Terms and Conditions

Complete System Price: $156,800.00

De□□er□□	□ppro□□ □te□ □□□□ wee□s
Ter□ s□	Per Co□tr□ct Docu□ e□ts
T□□es□	□pp□c□□e t□□es □re e□tr□
W□rr□□t□□	M□□u□□cturer's st□□d□rd o□e□□e□r w□rr□□t□
□□□d t□□	□□dur□□□ the per□or□ □□ce o□th□s co□tr□ct□the pr□ce o□□ □ter□□s s□□□□□c□□t□ □□cre□ses□throu□h □o □□ut o□MM□Ho□st S□ste□ s□the co□tr□ct pr□ce sh□□□e e□u□t□□□ □djusted □□ □□ □□ ou□t re□so□□□□ □ecess□r□ to co□er □□□ such s□□□□c□□t pr□ce □cre□ses□□s used here□□□ s□□□□c□□t pr□ce □cre□se sh□□□ e□□ □□□ □cre□se □□ □ □ter□□pr□ce e□ceed□□ □□ e□per□□ced □□MM□ro□ the d□te o□the co□tr□ct s□□□□□□□Such pr□ce □cre□ses sh□□□e docu□ e□ted throu□h □uotes□□□o□ces□or rece□pts□Where the de□□er□ o□□□□r□c□t□ □ □put □ □ter□□s de□□ed□throu□h □o □ut o□MM□□s □ resu□t o□the short□e or u□□□□□□□□□t□MM□sh□□□ot □e □□e □or □□□ □dd□t□o□□ costs or d□□ □□es □ssoc□ted with such de□□s□□

Th□□□ □ou □or the opportu□t□ to □uote th□s e□up□ e□t to □ou□ □w□□e □□□□□□e to re□ew th□s propos□□□ det□□ with □ou □t □our e□r□est co□□e□e□ce□

□er□ tru□ □ours□

Je□ S□□u□

MMI Hoist Systems, Inc.

OVERHEAD CRANES AND HOISTS
1042 SOUTH LEWIS • MESA, AZ 85210
PH: (602) 254-9333 • FAX: (602) 254-5233

City of Chandler RWIF
5 Ton Capacity Crane Data

1 General

Cr□□e t□pe ..... Top Ru□□□□□ Dou□□e □ □rder
Sp□□ ..... □□□□"
Cr□□e lo□d □SW□□ ..... □□ □□□ □□s

Tro□□e□ t□pe ..... Top Ru□□□□□
Ho□st lo□d ..... □□ □□□ □□s
Ho□st□□□ he□□ht M□□□ ..... □□□□ □□□" □□ □□ □□□□□ □□□" □
Ho□st t□pe M□□□ ..... S□□□□□□□□□P□□□DD□S
We□□ht o□ lo□e ho□st □□d tro□□e□ ..... □□□ □□s
Ho□st □roup ..... SM□ H□□
Ho□st□□□ speed ..... □□□□ t□□ □□ □ □speed
Tro□□e□ tr□□ers□□□ □roup ..... CM□□ C
Tro□□e□ tr□□ers□□□ speed ..... □□ t□□ □□

Tro□□e□ r□□□□u□e ..... □□□ □□□"
Cr□□e use ..... Outdoor u□der roo□

Cr□□e □roup ..... CM□□ C
□rd□e tr□□e□□□ □roup ..... CM□□ C

□rd□e tr□□e□□□ speed ..... □□□ t□□ □□

D□□□□ □c coe□□c□e□t □or lo□d ..... □□□
D□□□□ □c coe□□c□e□t de□d lo□d ..... □□□
S□dew□□s pu□□□ctor ..... □□□
Cr□□e □cce□er□t□o□ t□□e ..... □□ s

We□□ht o□ cr□□e with ho□sts□ ..... □□ □□□ □□s
We□□ht o□ cr□□e □rd□e without ho□sts□ ..... □□ □□□ □□s
We□□ht o□ lo□e e□d c□rr□□e ..... □□□ □□s
We□□ht o□ lo□e cr□□e tr□□e□□□ □ □ch□□er□ ..... □□ □□s
We□□ht o□□rd□e p□□e ..... □□ □□s
We□□ht o□ lo□e □ □□□ □rder ..... □□ □□□ □□s

M□□□ □rder t□pe □Pro□□e ..... W□□□□□□□M□t□□□

2 Electrical

M□□□ □o□t□□e ..... □□ □ □□□ H□
Co□tro□□o□t□□e ..... □□□ □
□o□ □□□□power o□cr□□e ..... □□□□ hp
M□□□ □use s□□e □t □rd□e p□□e ..... □□ □
M□□□□ u□ curre□t o□cr□□e□ ..... □□□□ □
□o□ □□□□curre□t o□cr□□e□ ..... □□□□ □
Power □ctor □t st□rt□□□ curre□t ..... □□□□
Power □ctor □t □o□ □□□□curre□t ..... □□□□
□o□t□□e drop o□tro□e□ power supp ..... □□ □□□ □

MMI Hoist Systems, Inc.

OVERHEAD CRANES AND HOISTS
1042 SOUTH LEWIS • MESA, AZ 85210
PH: (602) 254-9333 • FAX: (602) 254-5233

COMPONENTS AND ADDITIONAL FEATURES DATA

□ectr□c ho□st □□□ □S□□□□□□□□□P□□□DD□S

- □□ pcs Tr□□e□□□ □ otor ther□ □□protect□o□ □TM□□□□PTO
- □□ pcs O□er□o□d de□□ce t□pe □HS□□□□S□
- □□ pcs □P□□ ho□st □ otor protect□o□ □HM□□□□□□S
- □□ pcs He□□□ dut□ rope □u□de □HS□□□□□□S
- □□ pcs □P t□pe o□ ho□st p□□e□□P□□□□P□□ □□□□□P□□
- □□ pcs □P□□ tro□e□ □ otor protect□o□ □TM□□□□□□S
- □□ pcs Spec□□□u□r□□t □or □e□rs □□ □□□□□S□□
- □□ pcs St□□d□□ he□t□□□ □or ho□st□□□ □ otor □MOT□□□□□□S
- □□ pcs St□□d□□ he□t□□□ □or tro□e□ tr□□ers□□□ □ otor □MOT□□□□□□S
- □□ pcs Tro□e□ tr□□e□□□erter □r□□□□□ res□stor t□pe □C□□□□R□□□□□□□
- □□ pcs Ho□st□□□ □ otor ther□ □□protect□o□ □HM□□□□PTO
- □□ pcs Co□d□t□o□ □ o□tor□□□ t□pe □HS□□□□□CU
- □□ pcs □ectro□□s □or ho□st co□tro□□□owed □HS□□□□□S
- □□ pcs Ho□stMo□torSe□ect □HS□□□□□S

Tr□□e□□□ □ □ch□□er□□□ □ □ □S□□□PS□□O□□□□□□□□□□□□□□

- □□ pcs □r□d□e tr□□e□□□ □ otor ther□ □□protect□o□ □□M□□□□PTO
- □□ pcs □P□□ □r□d□e □ otor protect□o□ □□M□□□□□S
- □□ pcs Pr□ce □dder □or spec□□□u□r□□t □or □r□d□e tr□□e□□□ □e□rs □PR□□□□□□S
- □□ pcs St□□d□□ he□t□□□ □or □r□d□e tr□□e□□□ □ otor □MOT□□□□□□S

□r□d□e p□□e□□□ □ □PP□□□MM□□□□□□J□

- □□ pcs □step □□□ t□swt□ch□□r□d□e tr□□e□□□ □s□ow□stop□□□□M□□□□□S
- □□ pcs Coo□□□ de□□ce □or □r□d□e co□tro□p□□e□□□ □□□□□CH□
- □□ pcs □□□e□ectr□cs □□ □r□d□e p□□e□□□□□□□□□S
- □□ pcs □P t□pe o□□r□d□e p□□e□P□□□□□□□C□OS□D
- □□ pcs Ther□ ost□t co□tro□ed he□t□□□ □or □r□d□e p□□e□□□□□□□□S
- □□ pcs Hor□t□pe □oper□tor co□tro□ed□□□□□□□□□□□
- □□ pcs □r□d□e tr□□e□□□erter □r□□□□□ res□stor t□pe □C□□□□□R□□□□□□□
- □□ pcs □u□ □er o□TD Dr□□e Too□s □S□R□□□□□

Tro□e□ power supp□□ p□c□□□e □□estoo□□□□ □ □ □SMD□□M□□P□□□□□□□

- □□ pcs □□e□ectr□cs □□ □r□d□e p□□e□PR□□□□□□S
- □□ pcs St□c□er set □ST□□□□□
- □□ pcs □r□d□e e□u□pped w□th □tr□□e□□□ □ □ch□□er□ □PR□□□□□□S
- □□ pcs Tro□e□ □estoo□ r□□□t□pe □PS□□□□□□□
- □□ pcs Tro□e□ □estoo□ co□so□e t□pe □PS□□□□C□□□□□□□□□
- □□ pcs □e□□th o□ ho□st c□□□e □ree e□d to □r□d□e p□□e□□□□□PS□□□□□□□□
- □□ pcs □e□□th o□ ho□st c□□□e □ree e□d to ho□st p□□e□□□□□PS□□□□□□□□

Push □utto□ st□t□o□□□ □PR□ □□□□□□□C□□□□□□□P□□□□

- □□ pcs P□u□□□ co□□ector □or pe□d□□t c□□□e □□□□□□□□P□□
- □□ pcs M□□□ co□t□ctor □utto□ □u□ct□o□ □P□□□□□□

Re□ ote co□tro□□□ □R□Co□□□□□U□□□TCRTCU□□S□

- □□ pcs R□d□o co□tro□sp□re tr□□s□ tter □R□M□□□□□□S

Chandler RWIF 5t TRDG Bridge-O

REV	CHANGE DESCRIPTION	ECN	DATE	REVISED BY	APPROVED BY

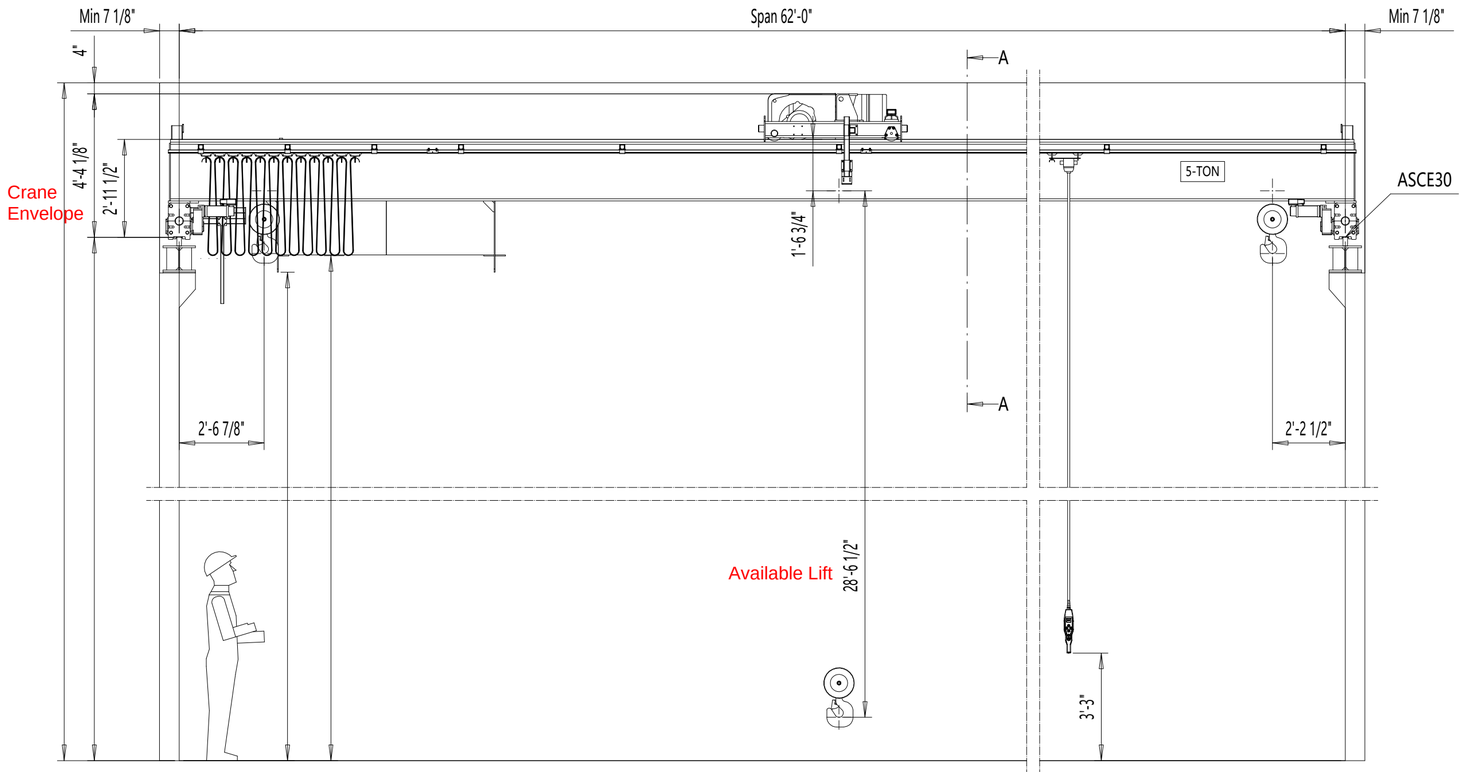

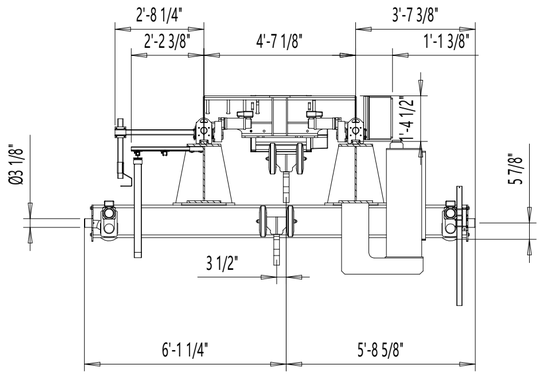

View A-A

SPECIFY NORTH

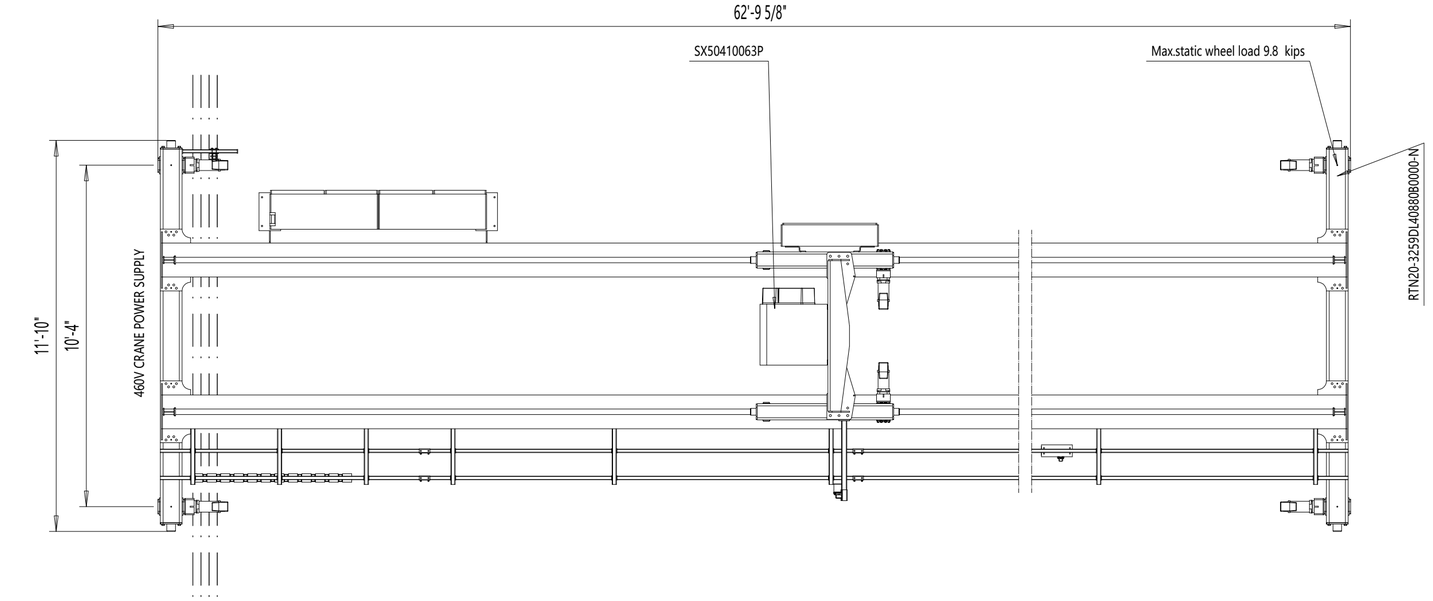

TECHNICAL DATA

SPAN	: 62'-0"
LOAD	: 5-TON
LIFTING HEIGHT	: 28'-6 1/2"
HOISTING SPEED	: 20.0/3.2 ft/min 2-speed
TRAVERSING SPEED	: 65 ft/min stepless
TRAVELLING SPEED	: 100 ft/min Stepless
WEIGHT OF TROLLEY	: 1480 lbs
WEIGHT OF BRIDGE	: 15887 lbs
CRANE CLASSIFICATION	: CMAA Class C
HOIST GROUP	: ASME H4*
CRANE DRIVE GROUP	: CMAA C
MAIN / CONTROL VOLTAGE	: 460 / 115 V; 60 Hz
SUPPLY POWER	: 18.91 Hp
LENGTH OF RUNWAY	: 46'-0"

SURFACE TREATMENT OF CRANE

Bridge color	: Safety Yellow
Paint	: AKRYL /127 µm

Customer organices safe platform for crane service

Outdoor Use crane

Radio controlled crane
Pendant as backup

R&M MATERIALS HANDLING

Pos	Amount	Description	Specification

ACCEPTED BY:
COMPANY:
DATE:

GSA/RHM	03/27	Phoenix	DAS / 2.130.12
Design	Date	Dept	Vx proj

QXD5-TON x 60ft Hol:28.55ft
-
-
Chandler RWIF 5t TRDG Bridge-O

1:40
M-film
Issue

This document is the absolute property of R&M. This document must not be copied without the written permission of R&M.
The contents thereof must not be disclosed to a third party nor be used for any unauthorized purpose. Contravention will be prosecuted.

Chandler RWIF 5t TRDG Bridge-OI

REV	CHANGE DESCRIPTION	ECN	DATE	REVISED BY	APPROVED BY

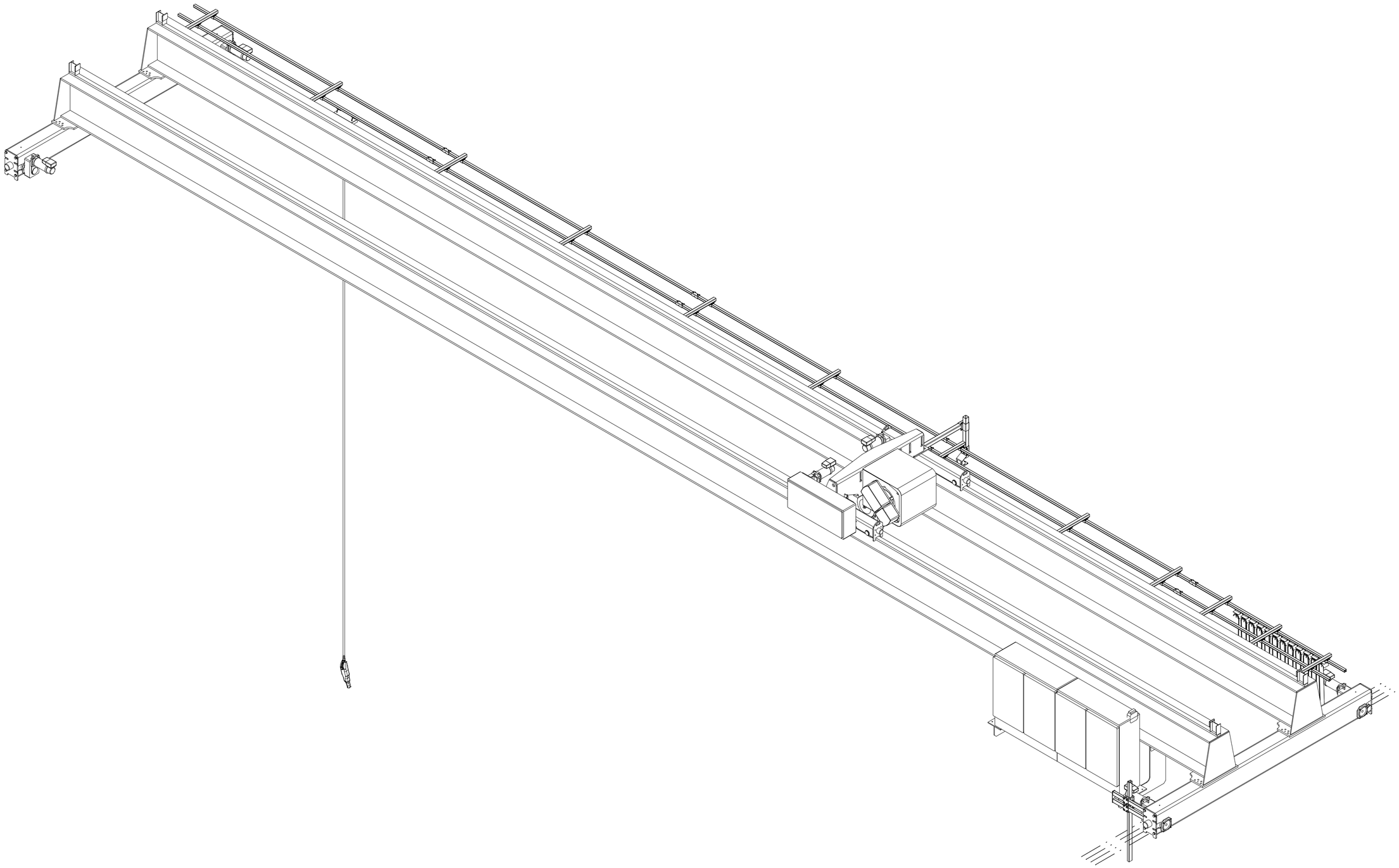

Pos	Amount	Description	Specification

ACCEPTED BY:

COMPANY:

DATE:

GSA/RHM	03/27	Phoenix	DAS / 2.130.12
Design	Date	Dept	Vx proj

QXD5-TON x 60ft Hol:28.55ft

-

-

Chandler RWIF 5t TRDG Bridge-OI

1:40

M-film

Issue

R&M MATERIALS HANDLING

This document is the absolute property of R&M. This document must not be copied without the written permission of R&M.
The contents thereof must not be disclosed to a third party nor be used for any unauthorized purpose. Contravention will be prosecuted.

Project Name: Chandler Reclaimed Water Interconnect Facility
Project No. WW1901.402

Work Category: **15B - HVAC & Plumbing**

Date: 4/12/2022 Rev 6/1/2022

Recommended

COMPANY INFORMATION		**Tempe Mechanical**	K Corp	Comfort Systems USA Southwest	Midstate Mechanical	HACI Mechanical Contractors
		Larry Cole	Aaron Miller	Melissa Westbrook	Evan Jones	Amelia Vargas
		480-289-3973	(602) 469-6541	480-940-8400	602-470-1920	602-944-1555
		clopez@tempemechanical.net	amiller@karbercorporation.com	cssw.estimating@comfortsystemsusa.co	ejones@midstatemechanical.com	avargas@hacimechanical.com
TOTAL WORK CATEGORY PACKAGE VALUE		**$188,409**	**$283,453**	**DECLINED**	**DECLINED**	**DECLINED**
MCCARTHY SUBCONTRACT & FRONT END TERMS						
1	Compliant with McCarthy Front Ends	Yes	Yes			
2	Bid Submitted on McCarthy Bid Form	No	Yes			
3	Bid Bond Included with Bid (if over $500k Sub/$1 Mil Supplier)	Yes	Yes			
4	Surety Company	Hartford Accident and Indemnity	Hartford Casualty Insurance Company			
5	Surety AM Best Rating (Must be A- or Better)	Yes	Yes			
6	AM Best Financial Size X($500M to $750M) or higher	Yes	Yes			
7	Anticipated contract amount is less than the Federal UW Limit as listed on the Treasury Listing	Yes	Yes			
8	Bond/CDI Cost	1.295%	1.800%			
9	Included Insurance Requirements (Per Matrix)	Yes	Yes			
10	GL Insurance Company Name	United Fire & Casualty	Amerisure Insurance Company			
11	GL Insurance Carrier AM Best Rating (Must be A- or Better)	A	A			
12	PRL Insurance (If required by the Front Ends)	NA	NA			
13	Pollution Insurance (If required by the Front Ends)	Yes	Yes			
14	Tier 1 Approved	No	Yes			
15	Tier 2 Approved	NA	NA			
16	Safety Items:					
17	OSHA Recordable Incident Rate (Current)	0.00	0.00			
18	Agrees to comply with PPE requirements including 100% glove policy	Yes	Yes			
19	Acknowledges updated ladder policy (platform ladders)	Yes	Yes			
20	Task Hazard Analysis included for all tasks	Yes	Yes			
21	Tie-off above 6' required	Yes	Yes			
22	Includes Hoisting for Sub's Own Work Scope	Yes	Yes			
23	Acknowledges Soils Report	n/a	n/a			
24	Acknowledges Addenda	Yes	Yes			
25	Hold Bid for 180 Days	Yes	Yes			
26	AC Unit Pricing good for the duration of the project	45 days	30 days			
27	Evap Cooler unit pricing good for the duration of the project	45 days	30 days			
28	Other material pricing good for the duration of the project	60 days	30 days			
29	Sales Tax Included	No	No			
30	**Market Questions**					
31	Have you experienced and/or do you anticipate any issues with existing suppliers or vendors?	Yes	Yes			
32	Do you have any overseas suppliers that may be impeding your supply chain?	No	No			
33						
34	Per Plans & Specifications	Yes	Yes			
35	Division 1 as it relates to this scope of work	Yes	Yes			
36	05051 - Anchor Bolts, Toggle Bolts, and Concrete Inserts	Yes	Yes			
37	15120 - Piping Specialties and Accessories	Yes	Yes			
38	15140 - Supports and Anchors	Yes	Yes			
39	15290 - Ductwork Insulation	Yes	Yes			
40	15680 - Evaporative Coolers	Yes	Yes			
41	15781 - Air Conditioning Unit	Yes	Yes			

Project Name: Chandler Reclaimed Water Interconnect Facility
Project No. WW1901.402

Work Category: **15B - HVAC & Plumbing**

Date: 4/12/2022 Rev 6/1/2022

Recommended

	COMPANY INFORMATION	Tempe Mechanical	K Corp	Comfort Systems USA Southwest	Midstate Mechanical	HACI Mechanical Contractors
		Larry Cole	Aaron Miller	Melissa Westbrook	Evan Jones	Amelia Vargas
		480-289-3973	(602) 469-6541	480-940-8400	602-470-1920	602-944-1555
		clopez@tempemechanical.net	amiller@karbercorporation.com	cssw.estimating@comfortsystemsusa.co	ejones@midstatemechanical.com	avargas@hacimechanical.com
	TOTAL WORK CATEGORY PACKAGE VALUE	**$188,409**	**$283,453**	**DECLINED**	**DECLINED**	**DECLINED**
42	15890 - Ductwork	Yes	Yes			
43	15910 - Ductwork Accessories	Yes	Yes			
44	15936 - Air Outlets and Inlets	Yes	Yes			
45	15982 - Line Voltage Thermostat	Yes	Yes			
46	15990 - Testing, Adjusting, and Balancing - Air	Yes	Yes			
Scope of Work						
Base Bid:		$186,000	$278,441			
47	Provide all labor, materials, tools, equipment and appurtenances as required to perform the Work Category - 15B HVAC & Plumbing, in accordance with and reasonably inferable from the Contract Documents, complete and without exception unless otherwise noted below, including, but not limited to the following:	HVAC only	HVAC only			
48	***Escalation Moved F2 Esclation Allowance (Not Calculated in Total WC): AC unit and Evap Cooler***	$18,401	$48,083.00			
49	***Escalation Moved F2 Esclation Allowance (Not Calculated in Total WC)***	$6,332	$8,935.00			
50	Unit of responsibility for system complete	Yes	Yes			
51	Water and air system balancing	Yes	Yes			
52	Vibration isolation	Yes	Yes			
53	Emergency Eye wash stations shown in 15A drawings	WC 15A	WC 15A			
54	Provide manufacturers warranties for AC Unit and Evaporative Cooler	Yes	Yes			
55	Shipping shall be FOB jobsite	Yes	Yes			
56	Unloading & storage	Yes	Yes			
57	Spare Parts per the Specifications	Yes	NA			
58	Performance testing: Per Spec	Yes	Yes			
59	COVID-19 Scope Items					
60	Proposal includes CDC, Federal, State and Local OSHA guidelines for COVID-19.	Yes	Yes			
61	Your proposal shall include all productivity, schedule, and other impacts to cost and schedule.	Yes	Yes			
62	All personnel onsite must maintain 6'0" spacing between personnel and shall have facemasks on at all times that align with CDC, Federal, State or Local OSHA guidelines for COVID-19.	Yes	Yes			
63	Any personnel reporting symptoms must be immediately reported to McCarthy and follow the appropriate testing and quarantine protocols.	Yes	Yes			
64						
65	End of Scope					
66	Bond/CDI Cost	$2,409	$5,012			
67	**TOTAL WORK CATEGORY PACKAGE VALUE**	**$188,409**	**$283,453**			

QUOTATION
Bid No. 2022-036

March 25, 2022

McCarthy Building Companies, Inc.
6225 North 24th Street
Phoenix, AZ 85016

ATTN: Nicole Azuri
RE: **Chandler Reclaimed Water facility – GMP 2**

Dear Nicole:

We are pleased to offer the following HVAC pricing for your review and consideration at the referenced project. Our pricing is based on the agency review drawings, dated 2/2022 with two addendums noted.

HVAC Total: $278,441.00

Scope of Work

We propose to furnish and install the following:

HVAC

- (1) Packaged unit
- (1) Evaporative cooler
- (7) Supply grilles
- (1) Return grille
- (4) Make-up air louvers
- (2) Roof curbs
- (4) Sheetmetal weather cover
- (3) Unistrut supports for exterior ducts
- Flashing provided for through wall duct penetrations
- New galvanized sheet metal ducts provided to SMACNA standards
- Insulation provided for new ducts per specification on drawings
- Certified independent test and balance of installed systems
- As built redline drawings provided upon completion of project

Clarifications

- K CORP has not included temporary cooling as there is not enough direction on what to quote
- K CORP has not included any provisions for housekeeping pads in our proposal
- K CORP has not included any DDC controls integration

EXCLUSIONS:

- **Cost of Sales Tax (TPT)**
- Bond, Fees and permits
- Mock-ups / Sample Construction
- Premium time
- Painting
- Line voltage wiring
- Duct cleaning
- Duct Pressure testing
- BIM or CAD drawings

K CORP specifically reserves the right to mutually negotiate terms and conditions of the contract agreement upon award, whether or not those terms are a part of this proposal. Our quotation is valid for 30 days. Unless noted otherwise our standard warranty period is 1 year.

K CORP welcomes the opportunity to be a part your project team. If you have any questions or need any clarifications, please contact us at your earliest convenience.

Sincerely,

Steven A. Martin
Vice President
K CORP - Karber Corporation
smartin@karbercorporation.com

Project Name: Chandler Reclaimed Water Interconnect Facility
Project No. WW1901.402

Work Category: **16A - Electrical, Controls and Instrumentation**

Date: 4/12/2022 Rev 6/1/2022

Recommended

	COMPANY INFORMATION	**Ludvik Electric**	Corbins Electric	IPS Electric	Wilson Electric	Sturgeon Electric
		Tom Spackman	Kirk Corbin	Lucas Bruxvoort	Tim Hunt	Scott Kuhlman
		602-777-5023	602-794-6073	480-220-6506	602-910-9406	602-319-0980
		Tspackman@Ludvik.com	K.Corbin@CorbinsElectric.com	JoshM@I-PWR.com	Thunt@WilsonElectric.net	SKuhlman@MYRGroup.com
	TOTAL WORK CATEGORY PACKAGE VALUE	**$5,426,119**	**$5,992,107**	**$6,549,708**	**$7,657,618**	**DECLINED**
	MCCARTHY SUBCONTRACT & FRONT END TERMS					
1	Compliant with McCarthy Front Ends	Yes	Yes	Yes	Yes	
2	Bid Submitted on McCarthy Bid Form	Yes	Yes	Yes	Yes	
3	Bid Bond Included with Bid (if over $250k Sub/$500k Supplier)	Yes	Yes	Yes	No	
4	Surety Company	Hartford Fire Insurance Agency	Bonding & Insurance Solutions LLC	Merchants Bonding Company	No	
5	Surety AM Best Rating (Must be A- or Better)	Yes	Yes	Yes	No	
6	AM Best Financial Size X($500M to $750M) or higher	XV	XV	100M to 250M	No	
7	Anticipated contract amount is less than the Federal UW Limit as listed on the Treasury Listing	Yes	Yes	Yes	No	
8	Bond/CDI Cost	0.800%	0.700%	0.900%	1.000%	
9	Included Insurance Requirements (Per Matrix)	Yes	Yes	Yes	Yes	
10	GL Insurance Company Name	The Phoenix Insurance Company	Zurich American Insurance	Employers mutual Casualty	Arch Insurance Company	
11	GL Insurance Carrier AM Best Rating (Must be A- or Better)	Yes	Yes	Yes	Yes	
12	PRL Insurance (If required by the Front Ends)	Yes	n/a	Yes	No	
13	Pollution Insurance (If required by the Front Ends)	Yes	Yes	Yes	No	
14	Tier 1 Approved	Yes	Yes	Yes	Pending	
15	Tier 2 Approved	n/a	n/a	n/a	n/a	
16	Safety Items:	Yes	Yes	Yes	Yes	
17	OSHA Recordable Incident Rate (Current)	1.13	0.59	0	1.47	
18	Agrees to comply with PPE requirements including 100% glove policy	Yes	Yes	Yes	Yes	
19	Acknowledges updated ladder policy (platform ladders)	Yes	Yes	Yes	Yes	
20	Task Hazard Analysis included for all tasks	Yes	Yes	Yes	Yes	
21	Tie-off above 6' required	Yes	Yes	Yes	Yes	
22	Includes Hoisting for Sub's Own Work Scope	Yes	Yes	Yes	Yes	
23	Acknowledges Soils Report	Yes	Yes	Yes	Yes	
24	Acknowledges Addenda	Yes	Yes	Yes	Yes	
25	Hold Bid for 180 Days	No	Yes	No	No	
26	Pricing good for the duration of the project	Yes	Yes	Yes	No	
27	Sales Tax Included	n/a	n/a	n/a	n/a	
28	**Market Questions**					
29	Have you experienced and/or do you anticipate any issues with existing suppliers or vendors?	Yes	Yes	Yes	Yes	
30	Do you have any overseas suppliers that may be impeding your supply chain?	Yes	Yes	Yes	Yes	
31						
32	Per Plans & Specifications	Yes	Yes	Yes	Yes	
33	Division 1 as it relates to this scope of work	Yes	Yes	Yes	Yes	
34	01010 - Summary of Work	Yes	Yes	Yes	Yes	
35	01300 - Submittals	Yes	Yes	Yes	Yes	
36	01410 - Testing	Yes	Yes	Yes	Yes	
37	01640 - Materials and Equipment	Yes	Yes	Yes	Yes	
38	01650 - Starting of Systems	Yes	Yes	Yes	Yes	
39	01660 - Field Tests of Equipment	Yes	Yes	Yes	Yes	
40	01730 - Operation and Maintenance Data	Yes	Yes	Yes	Yes	
41	01750 - Spare Parts and Maintenance Materials	Yes	Yes	Yes	Yes	

Project Name: Chandler Reclaimed Water Interconnect Facility
Project No. WW1901.402

Work Category: **16A - Electrical, Controls and Instrumentation**

Date: 4/12/2022 Rev 6/1/2022

Recommended

	COMPANY INFORMATION	**Ludvik Electric**	Corbins Electric	IPS Electric	Wilson Electric	Sturgeon Electric
		Tom Spackman	Kirk Corbin	Lucas Bruxvoort	Tim Hunt	Scott Kuhlman
		602-777-5023	602-794-6073	480-220-6506	602-910-9406	602-319-0980
		Tspackman@Ludvik.com	K.Corbin@CorbinsElectric.com	JoshM@I-PWR.com	Thunt@WilsonElectric.net	SKuhlman@MYRGroup.com
	TOTAL WORK CATEGORY PACKAGE VALUE	**$5,426,119**	**$5,992,107**	**$6,549,708**	**$7,657,618**	**DECLINED**
42	01821 Instruction of Operations and Maintenance Personnel	Yes	Yes	Yes	Yes	
43	02050 - Demolitions	Yes	Yes	Yes	Yes	
44	02315 - Earthwork, Excavation, and Backfill	Yes	Yes	Yes	Yes	
45	03200 - Concrete Reinforcement	Yes	Yes	Yes	Yes	
46	03300 - Cast-In-Place Concrete	Yes	No	No	Yes	
47	03600 - Grout	No	No	Yes	Yes	
48	05051 - Anchor Bolts, Toggle Bolts, and Concrete Inserts	Yes	Yes	Yes	Yes	
49	07840 - Firestopping - as it applies too this scope of work	Yes	Yes	Yes	Yes	
50	07900 - Joint Sealers - as it applies to this scope of work	Yes	No	Yes	Yes	
51	13110 - Cathodic Protection System - as it applies to this scope of work	No	Yes	Yes	Yes	
52	13447 - Electric Motor Actuators	Yes	Yes	Yes	Yes	
53	09900 - Painting	No	Yes	Yes	Yes	
54	Division 16	Yes	Yes	Yes	Yes	
55	Division 17	Yes	Yes	Yes	Yes	
Scope of Work						
Base Bid:		See Below	See Below	See Below	See Below	
56	Provide all labor, materials, tools, equipment and appurtenances as required to perform the Work Category 16A - Electrical, Instrumentation and Controls, in accordance with and reasonably inferable from the Contract Documents, complete and without exception unless otherwise noted below, including, but not limited to the following:	Yes	Yes	Yes	Yes	
57	Check to Spec completed and submitted to McCarthy	No	No	No	No	
58	How long will the bid be held for?	60 days	180 Days	60 days	30 days	
59	***Escalation Moved F2 Esclation Allowance (Not Calculated in Total WC)***	$542,611	$146,186	$350,000	0	
60	Existing Aeration Blower Room Cost	$525,830	$52,213	$92,897	$524,724	
61	Electrical Building Cost	$1,497,760	$1,768,180	$1,935,694	$2,284,596	
62	Membrane Filtration Building Cost	$814,715	$897,282	$1,081,079	$1,368,214	
63	Blower Building Cost	$199,100	$291,728	$537,986	$411,774	
64	Chemical Feed Building Cost	$497,160	$506,662	$819,675	$1,188,182	
65	Chlorine Contact Basin Cost	$33,980	$17,727	$50,657	$130,235	
66	Existing Admin Electrical Building & Effluent Pump Station Control Room Cost	$17,150	$4,558	$28,070	$0	
67	Raw Water Pump Station Cost	$421,280	$350,378	$710,190	$993,070	
68	Site Work Cost	$1,189,150	$1,982,728	$1,190,038	$656,005	
69	Temp Electrical Cost	$100,000	$25,000	$45,000	$25,000	
70	1 year warranty from Final Acceptance	Yes	Yes	Yes	Yes	
71	Temporary electrical connections for trailer and construction power as defined in the front ends, line item 47.	Yes	Yes	Yes	Yes	
72	Coordinate with CMAR to deenergize, make safe and demolish electrical items to allow for structural demolition.	Yes	Yes	Yes	Yes	
73	Relocation, and demolition of electrical and controls items as defined in the contract documents. Take care not to damage items in the demolition process and turn over items as outlined in the contract documents.	Yes	Yes	Yes	Yes	
74	Lock Out Tag Out (LOTO) safety program.	Yes	Yes	Yes	Yes	
75	Development and approval of Electrical MOPO plans prior to any MOPO work proceeding	Yes	Yes	Yes	Yes	
76	Subcontractor acknowledges that certain offsets, elevation changes, etc. may be required to coordinate it's work with that of other trades.	Yes	Yes	Yes	Yes	

Project Name: Chandler Reclaimed Water Interconnect Facility
Project No. WW1901.402

Work Category: **16A - Electrical, Controls and Instrumentation**

Date: 4/12/2022 Rev 6/1/2022

Recommended

	COMPANY INFORMATION	**Ludvik Electric**	Corbins Electric	IPS Electric	Wilson Electric	Sturgeon Electric
		Tom Spackman	Kirk Corbin	Lucas Bruxvoort	Tim Hunt	Scott Kuhlman
		602-777-5023	602-794-6073	480-220-6506	602-910-9406	602-319-0980
		Tspackman@Ludvik.com	K.Corbin@CorbinsElectric.com	JoshM@I-PWR.com	Thunt@WilsonElectric.net	SKuhlman@MYRGroup.com
	TOTAL WORK CATEGORY PACKAGE VALUE	**$5,426,119**	**$5,992,107**	**$6,549,708**	**$7,657,618**	**DECLINED**
77	Any extended warranties as required by the individual Contract Documents or provided by manufacturers are to be included.	Yes	5kv Cable NO	Yes	Yes	
78	Shop drawings, duct bank lay drawings, and all other required submittal packages associated with the scope of work.	Yes	Yes	Yes	Yes	
79	BIM/VDC coordination files/models/documents and coordinate location of all equipment/materials with other trades, including below grade and in-slab conduits/duct banks. ALL electrical work regardless of size shall be modeled.	Yes	Ductbank Only	Yes	Yes	
80	Coordinate fully with all subcontractors, equipment vendors, mechanical equipment, and McCarthy on each system and each component of every system.	Yes	Yes	Yes	Yes	
81	Survey and layout for electrical construction, including duct banks per the approved BIM coordination drawings.	Yes	No	Yes	Yes	
82	All material handling and hoisting for scope of work including unloading, organizing, storage, transport of equipment/materials from staging area to place of installation.	Yes	Yes	Yes	Yes	
83	Perform preventative maintenance of all electrical equipment including equipment provided by others. Submit maintenance reports on a weekly basis, as applicable.	Yes	No	Yes	Yes	
84	All sleeves, core drilling, saw cutting, asphalt cutting, link seal, and fire caulking related to scope of work. All existing surfaces will require restoration to original condition including paving, painting, etc.	Yes	No	Yes	Yes	
85	All grouting & dry packing associated with electrical and controls installation.	No	No	Yes	Yes	
86	All supports, hardware, etc. required as specified to mount the electrical/control equipment being provided and provided with other work packages.	Yes	Yes	Yes	Yes	
87	Spoil handling is for on-site stockpiling within 500 feet of excavation at a location as directed by McCarthy. Spoils will be removed from stockpile by others.	Yes	Yes	Yes	Yes	
88	Comply with requirements of Hazardous Classifications as required and outlined in Contract Documents.	N/A	Yes	Yes	Yes	
89	Trench plating of open trenches for roadways associated with scope of work.	Yes	Yes	Yes	Yes	
90	Spare conduits and future conduits are included with mule tape and any other requirements.	Yes	Yes	Yes	Yes	
91	All required excavation, backfill, compaction to sub grade as necessary for the underground conduit installation including fiber optic duct bank installation.	Yes	Yes	Yes	Yes	
92	Verify project finish elevation is required prior to installation.	Yes	Yes	Yes	Yes	
93	Rebar for under structures, traffic areas, and 10' either side of traffic areas.	Yes	Yes	Yes	Yes	
94	Integrally colored concrete for ductbanks (mixed at batch plant).	Yes	Yes	Yes	Yes	
95	Electrical manhole/pull boxes, and grounding; additional manholes/ hand holes for a code compliant system.	Yes	Yes	Yes	Yes	
96	Mandreling of conduits including maintaining a log.	Yes	Yes	Yes	Yes	
97	Complete conduit routing including but not limited to switchgear, motor control centers, variable frequency drives, panel boards, disconnects, and local emergency stops. Coordinate top vs. bottom entry to maintain UL listing.	Yes	Yes	Yes	Yes	
98	Receive, store, and install all Vendor provided panels, equipment, instruments, etc.	Yes	Yes	Yes	Yes	
99	All security systems as required	n/a	n/a	n/a	n/a	
100	All panels to be completed by approved City of Chandler panel vendor	Yes	Yes	Yes	Yes	
101	Install, anchor, and test all Switchgear, Transformers, Motor Control Centers, VFD's, Disconnects, Panel Boards, PLC Cabinets, RIO Cabinets, Control Panels that are not skid mounted	Yes	Yes	Yes	Yes	
102	Local Emergency Stops as required.	Yes	Yes	Yes	Yes	
103	All deflection and expansion fittings as required.	Yes	Yes	Yes	Yes	

Project Name: Chandler Reclaimed Water Interconnect Facility
Project No. WW1901.402

Work Category: **16A - Electrical, Controls and Instrumentation**

Date: 4/12/2022 Rev 6/1/2022

Recommended

	COMPANY INFORMATION	**Ludvik Electric**	Corbins Electric	IPS Electric	Wilson Electric	Sturgeon Electric
		Tom Spackman	Kirk Corbin	Lucas Bruxvoort	Tim Hunt	Scott Kuhlman
		602-777-5023	602-794-6073	480-220-6506	602-910-9406	602-319-0980
		Tspackman@Ludvik.com	K.Corbin@CorbinsElectric.com	JoshM@I-PWR.com	Thunt@WilsonElectric.net	SKuhlman@MYRGroup.com
	TOTAL WORK CATEGORY PACKAGE VALUE	**$5,426,119**	**$5,992,107**	**$6,549,708**	**$7,657,618**	**DECLINED**
104	Classified area seal off's: i. A detailed conduit seal-off plan identifying all seal-off locations shall be submitted to CMAR prior to installation of conduits. ii. A mock up of a seal off shall be completed, reviewed and approved by AHJ, CMAR, and Owner/Engineer prior to installing any seal-off's. Mock up shall demonstrate: iii. Conduit entry/exit through a concrete slab and masonry wall with seal-off being the first fitting. iv. Seal-off shall be 40% fill rated – wire fill must not exceed rating of seal-off. v. Seal-off shall be rated for the orientation it will be installed (horizontal or vertical). vi. Seal-off shall have conductor installed and separated to ensure full encasement by Chico sealing compound. If utilizing multiconductor cable that is not rated for classified spaces, outer jacked shall be stripped off at the seal-off location and wires separated to ensure full encasement by sealing compound. vii. Packing of seal-off. viii. Pouring of seal-off.	n/a	n/a	n/a	n/a	
105	Lightning protection system with master label & UL	Yes	Yes	Yes	Yes	
106	Coordination with process piping, & mechanical equipment vendors, for a completely integrated electrical and instrumentation system.	Yes	Yes	Yes	Yes	
107	All electrical/instrumentation racks.	Yes	Yes	Yes	Yes	
108	Termination of all electrical equipment.	Yes	Yes	Yes	Yes	
109	Layout of electrical equipment, control panels, and PLC's equipment pads.	Yes	Yes	Yes	Yes	
110	Protection of existing as required. Subcontractor shall be responsible for repair/replacement of damage caused by Subcontractor.	Yes	Yes	Yes	Yes	
111	Temporarily tag all power, instrumentation, and control wiring at final destinations.	Yes	Yes	Yes	Yes	
112	Equipment tags, and signage as required.	Yes	Yes	Yes	Yes	
113	Obtain all permits necessary for performance and completion of the work.	No	No	Yes	No	
114	Complete all conduit routing to all mechanical equipment and control equipment as required.	Yes	Yes	Yes	Yes	
115	Develop conductor and conduit schedule. Coordinate with I&C contractor to ensure proper quantity of conductors are installed.	Yes	Yes	Yes	Yes	
116	On-site supervision for all concrete pours, including off hour pours if applicable.	Yes	Yes	Yes	Yes	
117	Temporary warning and instructional signage as required.	Yes	Yes	Yes	Yes	
118	Temporary panel schedules will be installed and updated during the project.	Yes	Yes	Yes	Yes	
119	Fire Alarm System Design by NICET Level 4. Installation oversite and checkout by NICET level 3	Yes	Yes	Yes	Yes	
120	Furnish and install sunscreens as required.	Yes	Yes	Yes	Yes	
121	All terminations for all field mounted instruments furnished and mounted under other divisions.	Yes	Yes	Yes	Yes	
122	All field instruments and devices.	Yes	Yes	Yes	Yes	
123	Please list any items that have lead times that are uncommon, very long, or may impact schedule.	Transformers 66 Weeks MCCs 32 Weeks SES 50 Weeks	MV Transformers - 66 weeks SES Switchboard - 50 Weeks MV Switches - 36 Weeks MCC's - 32 Weeks	Transformers 66 weeks	Transformers 66 weeks	
124	MCC Manufacture	Eaton	Eaton	Eaton	Eaton	

Project Name: Chandler Reclaimed Water Interconnect Facility
Project No. WW1901.402

Work Category: **16A - Electrical, Controls and Instrumentation**

Date: 4/12/2022 Rev 6/1/2022

Recommended

	COMPANY INFORMATION	**Ludvik Electric**	Corbins Electric	IPS Electric	Wilson Electric	Sturgeon Electric
		Tom Spackman	Kirk Corbin	Lucas Bruxvoort	Tim Hunt	Scott Kuhlman
		602-777-5023	602-794-6073	480-220-6506	602-910-9406	602-319-0980
		Tspackman@Ludvik.com	K.Corbin@CorbinsElectric.com	JoshM@I-PWR.com	Thunt@WilsonElectric.net	SKuhlman@MYRGroup.com
	TOTAL WORK CATEGORY PACKAGE VALUE	**$5,426,119**	**$5,992,107**	**$6,549,708**	**$7,657,618**	**DECLINED**
125	Project Start Up - Electrical Subcontractor will designate a startup person whose sole responsibility will be to work with McCarthy startup team during all phases of startup. This person will have the authority to direct the Electrical Subcontractor's field personnel to assist in any portion of the startup process. This will be for the entire phase of the startup schedule. This will include submission of startup plans and test and source data.	Yes	Yes	Yes	Yes	
126	Coordination of loop verification during startup process.	Yes	Yes	Yes	Yes	
127	Continuity testing of all conductors and cabling as required. Includes Megger testing of all power conductors #12 AWG and larger. Create, update, and submit updates in a log to CMAR.	Yes	Yes	Yes	Yes	
128	NETA testing (to be completed by a third-party vendor). Electrical contractor will coordinate all AHJ inspections with McCarthy.	Yes	Yes	Yes	Yes	
129	Spare parts and tools.	Yes	Yes	Yes	Yes	
130	Complete point to point checkout of all power, control, analog, discrete wiring and submission reports to McCarthy startup team prior to any startup of equipment or systems. Third Party Grounding verification will be submitted to McCarthy prior to energize of any electrical equipment.	Yes	Yes	Yes	Yes	
131	All Equipment grounding/bonding including dedicated ground conductor per conduit and locking Myers type hub with lay in grounding lug. Third party verification required.	Yes	Yes	Yes	Yes	
132	Remove and re-install of breakers for testing. All breakers to be tested prior to commissioning	Yes	Yes	Yes	Yes	
133	Required testing power source.	Yes	Yes	Yes	Yes	
134	Pre-testing of all instruments and equipment prior to any formal testing.	Yes	Yes	Yes	Yes	
135	Coordination testing laboratory services, if applicable.	n/a	n/a	n/a	n/a	
136	Develop and maintain instrument calibration log and provide to McCarthy as requested.	Yes	Yes	Yes	Yes	
137	Develop and continually updated master I/O list. Initial I/O list to be submitted within 30 days of contract execution.	Yes	Yes	Yes	Yes	
138	I/O testing plan including a completed end to end test (CEET) plan.	Yes	Yes	Yes	Yes	
139	Factory Acceptance Testing (FAT) as required.	Yes	Yes	Yes	Yes	
140	Power to Bridge Crane / Electrification of Bridge Crane	Yes	Yes	Yes	Yes	
141	Programming PLC	By Vertech	By Vertech	Yes - Self	No	
142	Add Alternate: Upper Canopy and Bridge Crane	$63,460	$53,998.00	No	Yes	
143	SRP Run Allowance	$23,470	Yes	Yes	Yes	
144	Specified Lighting Fixture Package	Yes	Yes	Yes	Yes	
145	Specified Lighting Control Package	Yes	Yes	Yes	Yes	
146	Power to Cathodic Protection	n/a	n/a	n/a	n/a	
147	20 Year Warranty on 5kV cable and install (16305-3.6)	Yes	No	Yes	Yes	
148	COVID-19 Scope Items					
149	Proposal includes CDC, Federal, State and Local OSHA guidelines for COVID-19.	Yes	Yes	Yes	Yes	
150	Your proposal shall include all productivity, schedule, and other impacts to cost and schedule.	Yes	Yes	Yes	Yes	
151	All personnel onsite must maintain 6'0" spacing between personnel and shall have facemasks on at all times that align with CDC, Federal, State or Local OSHA guidelines for COVID-19.	Yes	Yes	Yes	Yes	
152	Any personnel reporting symptoms must be immediately reported to McCarthy and follow the appropriate testing and quarantine protocols.	Yes	Yes	Yes	Yes	
153						
154	End of Scope					
	Bond/CDI Cost	$43,064	$41,653	$58,422	$75,818	
	TOTAL WORK CATEGORY PACKAGE VALUE	**$5,426,119**	**$5,992,107**	**$6,549,708**	**$7,657,618**	

Project Name: Chandler Reclaimed Water Interconnect Facility
Project No. WW1901.402

Work Category: **16A - Electrical, Controls and Instrumentation**

Date: 4/12/2022 Rev 6/1/2022

Recommended

COMPANY INFORMATION	**Ludvik Electric**	Corbins Electric	IPS Electric	Wilson Electric	Sturgeon Electric
	Tom Spackman	Kirk Corbin	Lucas Bruxvoort	Tim Hunt	Scott Kuhlman
	602-777-5023	602-794-6073	480-220-6506	602-910-9406	602-319-0980
	Tspackman@Ludvik.com	K.Corbin@CorbinsElectric.com	JoshM@I-PWR.com	Thunt@WilsonElectric.net	SKuhlman@MYRGroup.com
TOTAL WORK CATEGORY PACKAGE VALUE	**$5,426,119**	**$5,992,107**	**$6,549,708**	**$7,657,618**	**DECLINED**

CORBINS ELECTRIC BID PROPOSAL

CE BID ID: 21-0660
PROJECT NAME: Chandler Reclaimed Water Interconnect Facility
REVISION: N/A
DATE: 3/25/2022
DELIVERED TO: nazuri@mccarthy.om

Dear Nicole Azuri:

Corbins Electric is pleased to offer the following bid proposal for your project. This proposal has been prepared in accordance with the *Contract Documents* listed below as well as the project specific *Inclusions, Exclusions, and Clarifications* attached.

CONTRACT DOCUMENTS:

- Drawings listed on G-2 dated: 02/2022
- Specification Section 16 and 17
- Addenda Acknowledged: #1 dated 03/04/22, #2 dated 03/25/22

PROPOSAL PRICING:

- Our price for the base bid portion of this work and any proposed adjustments is as follows:

BASE BID: SEE ATTACHED BID FORM

We look forward to being selected as the electrical contractor for this project and to working with your project team for its successful and timely completion. If you have any questions, or need any additional information, please contact me at the phone number or email below. Thank you.

Sincerely,

Rick Johnson
VP of Operations
602-275-8500
r.johnson@corbins.us

Approved by:

_____

Print Name:

_____

Signature Date

BID PROPOSAL

Date March 25, 2022

Bid Proposal of * Corbins (hereinafter called "Bidder")

a ** limited liability corporation, LLC organized and existing under the laws of the State of

Arizona.

* Insert name of firm.
** Insert corporation, partnership, or individual, as applicable.

(INSERT OWNER'S ADDRESS)
TO: McCarthy Building Companies, Inc.
6225 North 24th Street, Suite 200
Phoenix, Arizona 85016

The Bidder, in compliance with your Invitation for Bids for the construction of Chandler Reclaimed Water Interconnect Facility having examined the Contract Documents entitled City of Chandler, Reclaimed Water Interconnect Facility Project, and other related documents and being familiar with the site of the proposed work, and with all of the conditions surrounding the construction of the proposed project including the availability of materials and labor, and the progress of work to date, if any, hereby proposes to furnish all labor, materials, tools, equipment, machinery, equipment rental, transportation, superintendence, perform all work, provide all services, and to construct all work in accordance with the Contract Documents set forth herein, and at the prices stated below. These prices are to cover all expenses incurred in performing the work required.

The Bidder shall attach a copy of Bidders' detailed estimate to its Bid Proposal. This estimate shall identify all quantities shown in the documents or anticipated along with corresponding labor, material and equipment pricing.

After Bid Proposals are received, tabulated, and evaluated by McCarthy, said Bidder agrees to meet with McCarthy for the purpose of determining any duplications, omissions, or mutually agreed bid adjustments. For these meetings, the Bidder agrees to provide a complete, detailed cost breakdown; a list of all sub-subcontractors proposed for use in the work; and a list of all items, materials and their manufacturers proposed for use in the work.

The Bidder, if awarded a Subcontract, agrees to commence work and to fully complete its Work in accordance with a schedule to be established in collaboration with McCarthy under the provisions of the Additional Subcontractor Conditions of the Specifications.

The Bidder acknowledges receipt of the following Addenda: #1, #2.

BASE BID:

The Bidder agrees to perform all Electrical and I&C (herein insert the title of the Work Category as it appears in the Additional Subcontractor Conditions) Work for Work Category No. 16A, as described in the Contract Documents, for the Lump Sum of five million two hundred thirty two thousand six hundred twenty DOLLARS ($5,232,620).

BID BREAKDOWN:

Raw Water PS	$See Attached
Membrane Facility/Strainer	$See Attached
Chemical Facility	$See Attached
Blower Building	$See Attached
Electrical Building	$See Attached
Chlorine Contact Basin	$See Attached
Site Work	$See Attached
Performance & Payment Bond Cost *(If Applicable)*	$36,737
Total Subcontract Amount	$

The name of the proposed Bonding Company is Bonding & Insurance Solutions, LLC

Bond rate .70 %

All applicable taxes, except sales and use taxes on materials and equipment which are affixed and made a part of the real estate of the Project, are included in the above Base Bid. Bidder agrees that this Bid Proposal shall be good and may not be withdrawn unless McCarthy does not send Bidder a Subcontract within one hundred eighty (180) calendar days after the opening date of Bid Proposals.

(Amounts shall be shown in both words and figures. In case of discrepancy, the amount shown in words will govern.)

ALTERNATES:

The Bidder further agrees that if any or all of the Alternates listed and described below are incorporated and accepted within sixty (60) calendar days after receipt of a Subcontract from McCarthy, the Bidder will adjust its Subcontract by the amount indicated opposite the Alternates listed below.

ALTERNATE NO. 1: Canopy and Bridge Crane @ Membrane Facility:

ADD the sum of $53,998.

CHANGE ORDER RATES: (Add separate sheet as needed)

Markup % (on rates and material): See Attached.

Position: _____ Rate: _____.

Equipment: _____ Rate: _____.

The Bidder understands that McCarthy reserves the right to reject any or all Bid Proposals and to waive any informalities or irregularities therein.

SELECT AS APPROPRIATE

☐ The Bidder has completed the Prequalification Form together with all other required data for McCarthy's' Contractor Default Insurance Program; OR

☒ The Bidder has not completed the Prequalification Form together with all other required data for McCarthy's' Contractor Default Insurance Program because the Bidder has provided the Form and all such information to McCarthy in the past 12 months for the following project:

_____ Project, which bid on: _____.

RESPONSIVE BID REQUIREMENTS:

DO NOT ENCLOSE YOUR STANDARD TERMS AND CONDITIONS

If any exceptions are taken to the requirements of this Proposal form, attach a separate sheet listing those exceptions, stating the sections and paragraphs and the specific exception.	
In submitting this proposal, the Bidder certifies that this bid is valid for 180 calendar days.	(*1)
In submitting this Proposal as described herein, we agree to complete the work in accordance with the included Preliminary Construction Sequence.	RJ
In submitting this Proposal, the Bidder certifies that all cost for extended warranties to start on the date of Substantial Completion is included.	(*2)
In submitting this proposal as described herein, we confirm that we have received, reviewed and agree to all commercial terms stated in the McCarthy Subcontract and Purchase Order Agreement. Any exception taken to the commercial terms stated in these Agreements must be listed on a separate sheet noting the article or paragraph and the specific exception. ***Bidders attached Standard Terms and Conditions will not be acknowledged or accepted as part of any given bid.***	(*3)
In submitting this proposal as described herein, the Bidder certifies that this bid is coordinated based on a complete set of documents and that there will be no claims for change order based on the assertion that the Bidder did not have a complete set of Bidding Documents.	RJ
In submitting this proposal, the Bidder certifies that they have included all spare parts, training, O & M Manuals, shop drawings and administration costs as associated to comply with the requirements of the specifications and as listed for their scope of work.	RJ
A bid will be considered non-responsive if the Subcontractor Pre-Qualification Form is not completed as part of the Bid Form **(or on file at McCarthy office)**.	RJ
The Bidder, by submitting their bid, represents that they have read and understand the scope requirements of the Bidding Documents.	RJ

*See attached Amendments and Clarifications

The Bidder certifies that any proposed materials in this scope of work meet or exceeds the requirements stated in the specifications unless noted otherwise within this proposal.	RJ
The bidder certifies that the price listed in this bid is a firm Price through the final delivery of the materials proposed herein, and that no material escalation will be accepted as part of this proposal.	(*4)

Within fifteen (10) days after receipt by the Bidder from McCarthy of the Subcontract or Purchase Order, the Bidder will execute and return to McCarthy said Subcontract or Purchase Order and if notified from McCarthy that Bidder is not to be enrolled in McCarthy's Contractor Default Insurance Program, deliver to McCarthy Performance and Labor and Material Payment Bonds for the Subcontract or a Supply Contract Bond for the Purchase Order, or the difference between the amount of the bid and such larger amount for which McCarthy may subcontract with another party to perform the work covered by said bid, together with all court costs, all attorney fees and all other expense of recovery, all of which shall not exceed the Bid Security attached in the amount of 15% of the bid, will become the property of McCarthy. The bonds shall name McCarthy as Obligee.

If an Individual:

Authorized Signature: _____

Name (print): _____

Email: _____

Business Address: _____

_____

If a Partnership:

Authorized Signature: _____

Name (print): _____

Email: _____

Authorized Signature: _____

Name (print): _____

Email: _____

Business Address: _____

_____

If a Corporation:

Authorized Signature: Rick A. Johnson, P.E.

Digitally signed by Rick A. Johnson, P.E.
DN: C=US, E=r.johnson@corbinselectric.com, O=Corbins Electric, OU=VP Operations - Industrial, CN="Rick A. Johnson, P.E."
Date: 2022.03.25 10:43:18-07'00'

Name (print): Rick Johnson, P.E.

Email: R.Johnson@Corbins.US

Title: VP of Operations - Industrial

Business Address: 4829 South 38th Street

Phoenix, AZ 85040

Telephone 602-275-8500

Contractor License Number: CR-11 ROC #158423 & A-17 ROC #158422

General Liability Insurance Carrier (not the agent): Zurich American Insurance Co.

*Please attach a sample certificate of insurance and current W9 form to your bid.

CORBINS

4829 S. 38TH ST
PHOENIX, AZ 85040
602.275.8500

Amendments and Clarifications

- (1) - Corbins has included commodity pricing that is good as of today, 03/25/22. We recommend a negotiated material escalation contingency to be carried by owner and used during construction. At end of project any unused proceeds would be provided the McCarthy.

- (2) - Corbins would recognizes and accepts the following extended warranty section. We take exception to the 16305-3.6 (20 year warranty on 5KV Cable and installation)

- (3) - Corbins is currently reviewing the McCarthy Subcontract and Purchase Order Agreement in its entirety. Any redaction, edits or comments will be submitted after document review by Corbins Contract and Executive Leadership Team.

- (4) - Similar to Note (1) above.

Added Electrical Breakout		
Area	**$**	**MH**
Existing Aeration Blower Rm (E-3.01)	$51,213.00	184
Electrical Bldg (E-3.02/3.03)	$1,736,180.00	1,754
Membrane Filtration (E-3.04/306)	$897,282.00	5,046
Blower Bldg (E-3.07/3.08)	$291,728.00	1,609
Chemical Feed (E-3.09/3.11/3.13)	$506,662.00	2,576
Chlorine Contact Basin (E-3.12)	$17,727.00	61
Existing Admin Electrical Bldg & Effluent PS Control Rm (E-3.14)	$4,558.00	8
Raw Water Pump Station (E-3.15/E3.16)	$350,378.00	905
Site Work	$1,376,892.00	7,301
Temp Electrical	$25,000 Allowance	

*Site work to include light pole demo and ductbank work

Standard Change Order Rates

Labor

POS #	Role	HR/WK	HR RATE
1	Project Manager	40	$ 170.00
2	Project Superintendent	40	$ 160.00
3	Project Engineer	40	$ 125.00
4	Field Engineer	40	$ 102.00
5	Estimator	40	$ 105.00
6	Virtual Construction Engineer	40	$ 125.00
7	General Foreman	40	$ 95.00
8	Foreman	40	$ 85.00
9	Journeyman	40	$ 76.00
10	Apprentice	40	$ 64.00
11			
12			
	*Rates include: Fully Burdened Wage Rates, Company Vehicle (for specific roles), Computer, Phone, Subsistence, Insurance, Taxes, OH&P		

Material, Equipment, Subs

1	
2	Material, Equip, Subs Markup - 15%
3	
4	
5	
6	
7	
8	
9	
10	

CORBINS ELECTRIC

INCLUSIONS, EXCLUSIONS, AND CLARIFICATIONS

21-0660 CHANDLER RECAIMED WATER INTERCONNECT FACILITY

TYPE	DESCRIPTION
INCLUSION	Specified Switchgear Package including switchboards, panels, transformers, circuit breakers, disconnects and fuses. (including attic stock). We are proposing to use EATON switchgear as they are existing on-site. This will mitigate possible problems with modifying the existing MCC
INCLUSION	Specified lighting fixture package
INCLUSION	Specified lighting control package
INCLUSION	Fire alarm engineering and system devices as shown subject to final approval by the authority having jurisdiction. We are proposing to use Western States Fire Protection. They are the ones currently on-site
INCLUSION	Core drilling for Corbin's conduits only
INCLUSION	Payment and Performance Bond as an adder on the bid form
INCLUSION	All enclosures and cabinets are NEMA N12 or N4X unless specifically noted in inclusions
INCLUSION	Demolition of 3 light poles to be relocated (all other demolition is excluded). Existing conduit is to be abandoned in place
INCLUSION	The relocation of 3 existing light poles, including the re-routing conduit and cable
INCLUSION	Temporary Power as an allowance
INCLUSION	BIM is included for the electrical ductbank only at LOD350 as baseline. Once BIM execution plan is agreed upon costs may fluctuate
INCLUSION	120V power to Cathodic Protection as shown on the electrical drawings
INCLUSION	Power and controls as shown on the electrical drawings to electrical operators (13128)
INCLUSION	Power and controls as shown on the electrical drawings to electrical motor operators (13447)
INCLUSION	The specified (Per specifications/Responsibility Matrix) Instrumentation & Controls package including spares.
INCLUSION	I&C Programming by Vertech
INCLUSION	Corbins base price includes the PVC Conduit, supports, vaults and grounding for all underground duct bank infrastructure
EXCLUSION	Excavation, compaction, backfill, concrete and rebar as specifically required for raceways in Corbins Scope
EXCLUSION	Fireproofing
EXCLUSION	Sales tax on Materials
EXCLUSION	On-site construction water for dust control or backfill operations
EXCLUSION	Rock excavation (rock is defined as material than cannot reasonably be excavated with the use of a Case 580 or equivalent backhoe without special attachments)
EXCLUSION	Any unknown or unmarked underground utilities, structures, or debris, whether natural or manmade
EXCLUSION	Patching, painting and rust-proofing other than factory finish
EXCLUSION	Fire alarm devices, exit lights, and emergency battery packs added by Fire Marshal, Electrical Inspector, or plan review
EXCLUSION	Overtime. This work is bid to be performed Monday through Friday between the hours of 6am and 3pm
EXCLUSION	Sales tax on Materials - This project is understood to be considered TPT and an AZ5005 Certificate will be issued on this project (per AZ revised statute)
EXCLUSION	Additional costs for hazardous work conditions such as asbestos abatement, confined space etc.
EXCLUSION	Energized Electrical Work
EXCLUSION	Dumpster and disposal fees (to be provided and paid for by General Contractor)
EXCLUSION	All formed concrete for equipment pads, transformer pads, pole bases, and/or pole base auguring, concrete, asphalt and drywall demo, disposal, removal and patch/repair
EXCLUSION	Scaffolding in its entirety unless specifically noted in INCLUSIONS

CORBINS ELECTRIC

INCLUSIONS, EXCLUSIONS, AND CLARIFICATIONS

21-0660 CHANDLER RECAIMED WATER INTERCONNECT FACILITY

TYPE	DESCRIPTION
EXCLUSION	*Engineering, surveying, CADD license fees, blueprint and reprographics cost, permit and plan check fees, cost of bid, any and all allowances unless specifically noted herein, utility company costs, SWPPP, fees or consumption fees, electrical code upgrades and/or repairs to existing systems, warranty or freight claims for owner provided equipment.*
EXCLUSION	Grounding of perimeter fencing
EXCLUSION	***We take exception to specification section 16305-3.6 (20 year warranty on 5kv cable and installation)***
EXCLUSION	The furnishing and installation of electrical operators (13128)
EXCLUSION	The furnishing and installation of electrical motor actuators (13447)
EXCLUSION	The installation of in-line or flange mounted devices
EXCLUSION	Procurement of all vendor provided equipment and instrumentation per McCarthy's responsibility matrix.
EXCLUSION	Provide and Install of all valves except for power and control connections.
EXCLUSION	It is assumed Portable Bathrooms and Handwash stations will be provided by the GC at no cost to Corbins for the duration of the project
EXCLUSION	Badging and Background checks
EXCLUSION	On-site Internet connection will be provided for common trailer city area by GC at no cost to Corbins
EXCLUSION	On Site Potable Water will be provided for construction personnel use by GC at no cost to Corbins.
EXCLUSION	Core drilling is assumed to be provided by single source contractor and carried by the GC.
EXCLUSION	Rigging is assumed to be provided by single source contractor and carried by the GC.
CLARIFICATION	***To the extent that Subcontractor's timely performance of work is unreasonably impacted whether by acceleration, delay, disruption or otherwise, however caused, by Contractor, Owner, or any other party for whose acts Subcontractor is not legally liable, Subcontractor shall be entitled to an equitable adjustment to its contract which may include additional compensation and/or an extension of time, including any increased costs of labor, overtime, and/or materials.***
CLARIFICATION	*Upon completion of final plan check comments our firm will begin prefabrication of the electrical system. If modifications to the plans are incorporated after the completion of plan check comments, any prefabricated material, system, labor, and other directly related expenses, which may not be used on the project, shall be considered an additional expense to the project. This additional expense shall be over and above the modifications made to the plans.*
CLARIFICATION	***Unless otherwise extended in writing from Corbin's Electric, this pricing is accurate as of today market pricing, 03/25/22 . Corbins recommends a contingency to be held by the construction parties jointly at an agreed upon rate, in which case any savings at end of project will be provided back to the GC/Owner if not exceeded.***
CLARIFICATION	*This proposal contains proprietary information and is considered confidential to Corbin's Electric. It is submitted upon the express condition that the information contained herein will not be released to competitors or otherwise used directly or indirectly in a way detrimental to the interest of Corbin's Electric. This proposal also supersedes any previously communicated pricing and/or clarification relating to this project.*
CLARIFICATION	*Please note that this pricing is based strictly upon the contract documents listed on the Proposal and incorporates by reference, the terms contained in this Corbin's Electric Bid Proposal. We reserve the right to modify, alter or revise any pricing to reflect adjustments to the bid documents, whether provided prior to, or following, the submission of the bid proposal. Corbin's Electric does not bid to 'intent' or 'implied interpretations' of others but to the actual contents of these bid and contract documents as shown on the project bid drawings.*
CLARIFICATION	*Workmanship warrantied for 1 year*

INCLUSIONS, EXCLUSIONS, AND CLARIFICATIONS

21-0660 CHANDLER RECAIMED WATER INTERCONNECT FACILITY

TYPE	DESCRIPTION
CLARIFICATION	(1) 4 " Primary conduit 200' for new 400A service at the RWPS Area has been assumed as no point of connection point was referenced on the plans. If this quantity of conduits, size or distance is changed equitable adjustment will be required.
CLARIFICATION	**This proposal is explicitly subject to change (including but not limited to increased cost and delays) as a result of coronavirus/COVID-19 and resulting price escalations, delays in manufacturing and/or delivery of materials and equipment, labor shortages and negative labor fluctuations. Corbins expressly reserves the right to withdraw this proposal in the event of a shelter in place order or any directive from any authority having jurisdiction that the work is suspended, delayed, prohibited, canceled or shut down.**
CLARIFICATION	We are assuming that all instrumentation on a vendor supplied package (example: BLO-010) is supplied and installed by the vendor.
CLARIFICATION	All existing conduits to be reused are to be in place, installed in compliance with current code and AHJ standards and of sufficient size for new scope of work
CLARIFICATION	MCC-RWIF is being quoted as Nema 1A not Nema 12

ROC#: 158423 CR-11 ELECTRICAL
ROC#: 158422 A-17 ELECTRICAL

SUBMITTAL & DELIVERY LEAD TIMES

SWITCHGEAR	DRAWINGS	DELIVERY
MCC'c	8-10 WEEKS	30-32 WEEKS ARO
MV SWITCHES	8-10 WEEKS	34-36 WEEKS ARO
SES SWBD	8-10 WEEKS	50 WEEKS ARO
MV TRANSFORMERS	8-10 WEEKS	64-66 WEEKS ARO
VAULTS	2-4 WEEKS	4-8 WEEKS

LIGHTING	
TYPE A	IN STOCK
TYPE B, F & X	4-6 WEEKS
TYPE C & D	12-14 WEEKS

ALL DELIVERY DATES ARE SUBJECT TO CHANGE

BID PROPOSAL

Date March 25, 2022

Bid Proposal of * Industrial Power Solutions LLC (hereinafter called "Bidder")

a ** Limited Liability Company organized and existing under the laws of the State of Arizona.

* Insert name of firm.
** Insert corporation, partnership, or individual, as applicable.

(INSERT OWNER'S ADDRESS)
TO: McCarthy Building Companies, Inc.
6225 North 24th Street, Suite 200
Phoenix, Arizona 85016

The Bidder, in compliance with your Invitation for Bids for the construction of Chandler Reclaimed Water Interconnect Facility having examined the Contract Documents entitled City of Chandler, Reclaimed Water Interconnect Facility Project, and other related documents and being familiar with the site of the proposed work, and with all of the conditions surrounding the construction of the proposed project including the availability of materials and labor, and the progress of work to date, if any, hereby proposes to furnish all labor, materials, tools, equipment, machinery, equipment rental, transportation, superintendence, perform all work, provide all services, and to construct all work in accordance with the Contract Documents set forth herein, and at the prices stated below. These prices are to cover all expenses incurred in performing the work required.

The Bidder shall attach a copy of Bidders' detailed estimate to its Bid Proposal. This estimate shall identify all quantities shown in the documents or anticipated along with corresponding labor, material and equipment pricing.

After Bid Proposals are received, tabulated, and evaluated by McCarthy, said Bidder agrees to meet with McCarthy for the purpose of determining any duplications, omissions, or mutually agreed bid adjustments. For these meetings, the Bidder agrees to provide a complete, detailed cost breakdown; a list of all sub-subcontractors proposed for use in the work; and a list of all items, materials and their manufacturers proposed for use in the work.

The Bidder, if awarded a Subcontract, agrees to commence work and to fully complete its Work in accordance with a schedule to be established in collaboration with McCarthy under the provisions of the Additional Subcontractor Conditions of the Specifications.

The Bidder acknowledges receipt of the following Addenda: #2.

BASE BID:

The Bidder agrees to perform all 16A - Electrical Instrumentation & Controls (herein insert the title of the Work Category as it appears in the Additional Subcontractor Conditions) Work for Work Category No. 16A, as described in the Contract Documents, for the Lump Sum of six million five hundred forty nine thousand, seven hundred eight and no/100 DOLLARS ($ 6,549,708.00).

BID BREAKDOWN:

Existing Aeration $92,897.00

Raw Water PS	$ 710,190.00
Membrane Facility/Strainer	$ 1,081,079.00
Chemical Facility	$ 819,675.00
Blower Building	$ 537,986.00
Electrical Building	$ 1,935694.00
Chlorine Contact Basin	$ 50,657.00
Site Work	$ 1,160,038.00
	Temp Power $ 45,000.00
Performance & Payment Bond Cost *(If Applicable)*	$ 58,422.00
Total Subcontract Amount	$ 6,549,708.00

The name of the proposed Bonding Company is Merchants Bonding Company

Bond rate .91 %

All applicable taxes, except sales and use taxes on materials and equipment which are affixed and made a part of the real estate of the Project, are included in the above Base Bid. Bidder agrees that this Bid Proposal shall be good and may not be withdrawn unless McCarthy does not send Bidder a Subcontract within one hundred eighty (180) calendar days after the opening date of Bid Proposals.

(Amounts shall be shown in both words and figures. In case of discrepancy, the amount shown in words will govern.)

ALTERNATES:

The Bidder further agrees that if any or all of the Alternates listed and described below are incorporated and accepted within sixty (60) calendar days after receipt of a Subcontract from McCarthy, the Bidder will adjust its Subcontract by the amount indicated opposite the Alternates listed below.

ALTERNATE NO. 1: Canopy and Bridge Crane @ Membrane Facility:

ADD the sum of $ NA .

CHANGE ORDER RATES: (Add separate sheet as needed)

Markup % (on rates and material): 10% Overhead - 10% Profit .

Position: Electrician Rate: $75 p/hr.

Equipment: TBD Rate: TBD.

The Bidder understands that McCarthy reserves the right to reject any or all Bid Proposals and to waive any informalities or irregularities therein.

SELECT AS APPROPRIATE

☒ The Bidder has completed the Prequalification Form together with all other required data for McCarthy's' Contractor Default Insurance Program; OR

☐ The Bidder has not completed the Prequalification Form together with all other required data for McCarthy's' Contractor Default Insurance Program because the Bidder has provided the Form and all such information to McCarthy in the past 12 months for the following project:

_____ Project, which bid on: _____.

RESPONSIVE BID REQUIREMENTS:

DO NOT ENCLOSE YOUR STANDARD TERMS AND CONDITIONS

If any exceptions are taken to the requirements of this Proposal form, attach a separate sheet listing those exceptions, stating the sections and paragraphs and the specific exception.	LJB (initials)
In submitting this proposal, the Bidder certifies that this bid is valid for 180 calendar days.	~~(initials)~~
In submitting this Proposal as described herein, we agree to complete the work in accordance with the included Preliminary Construction Sequence.	LJB (initials)
In submitting this Proposal, the Bidder certifies that all cost for extended warranties to start on the date of Substantial Completion is included.	LJB (initials)
In submitting this proposal as described herein, we confirm that we have received, reviewed and agree to all commercial terms stated in the McCarthy Subcontract and Purchase Order Agreement. Any exception taken to the commercial terms stated in these Agreements must be listed on a separate sheet noting the article or paragraph and the specific exception. ***Bidders attached Standard Terms and Conditions will not be acknowledged or accepted as part of any given bid.***	LJB (initials)
In submitting this proposal as described herein, the Bidder certifies that this bid is coordinated based on a complete set of documents and that there will be no claims for change order based on the assertion that the Bidder did not have a complete set of Bidding Documents.	LJB (initials)
In submitting this proposal, the Bidder certifies that they have included all spare parts, training, O & M Manuals, shop drawings and administration costs as associated to comply with the requirements of the specifications and as listed for their scope of work.	LJB (initials)
A bid will be considered non-responsive if the Subcontractor Pre-Qualification Form is not completed as part of the Bid Form **(or on file at McCarthy office)**.	LJB (initials)
The Bidder, by submitting their bid, represents that they have read and understand the scope requirements of the Bidding Documents.	LJB (initials)

The Bidder certifies that any proposed materials in this scope of work meet or exceeds the requirements stated in the specifications unless noted otherwise within this proposal.	LJB (initials)
The bidder certifies that the price listed in this bid is a firm Price through the final delivery of the materials proposed herein, and that no material escalation will be accepted as part of this proposal.	LJB (initials)

Within fifteen (10) days after receipt by the Bidder from McCarthy of the Subcontract or Purchase Order, the Bidder will execute and return to McCarthy said Subcontract or Purchase Order and if notified from McCarthy that Bidder is not to be enrolled in McCarthy's Contractor Default Insurance Program, deliver to McCarthy Performance and Labor and Material Payment Bonds for the Subcontract or a Supply Contract Bond for the Purchase Order, or the difference between the amount of the bid and such larger amount for which McCarthy may subcontract with another party to perform the work covered by said bid, together with all court costs, all attorney fees and all other expense of recovery, all of which shall not exceed the Bid Security attached in the amount of 15% of the bid, will become the property of McCarthy. The bonds shall name McCarthy as Obligee.

If an Individual:

Authorized Signature: _____

Name (print): _____

Email: _____

Business Address: _____

_____

If a Partnership:

Authorized Signature: _____

Name (print): _____

Email: _____

Authorized Signature: _____

Name (print): _____

Email: _____

Business Address: _____

_____

If a Corporation:

Authorized Signature: _____

Name (print): Lucas Bruxvoort

Email: lucasb@i-pwr.com

Title: Managing Member

Business Address: 6615 W. State Ave

Glendale, AZ 85301

Telephone 602-466-9662

Contractor License Number: C-11 256077;A-17 318833;A General - 330814

General Liability Insurance Carrier (not the agent): EMC Insurance

*Please attach a sample certificate of insurance and current W9 form to your bid.

08-19-2014 Rev.
Front Ends

BID BOND

KNOW ALL MEN BY THESE PRESENTS, that we Industrial Power Solutions, LLC (here insert full name and address or legal title of Contractor) as Principal, hereinafter called the Principal, and Merchants National Bonding, Inc.

(Here insert full name and address or legal title of Surety) a corporation duly organized under the laws of the State of IA as Surety, hereinafter called the Surety, are held and firmly bound unto McCARTHY, hereinafter called the Obligee, in the sum of Fifteen percent of the amount bid Fifteen Percent of Amount Bid (15%)

DOLLARS ($ 15% of amount), for the payment of which sum well and truly to be made, the said Principal and the said Surety, bind ourselves, our heirs, executors, administrators, successors and assigns, jointly and severally, firmly by these presents.

WHEREAS, the Principal has submitted a bid for Work Category No. ____, for Chandler Reclaimed Water Interconnect Facility Project, 955 E. Queen Creek Road, Chandler, Arizona 85286

NOW, THEREFORE, if the Obligee shall accept the bid of the Principal and the Principal shall, within the specified period of time, enter into a formal contract and furnish a surety guaranteeing the full and faithful performance of the Work, all as provided in the Additional Subcontractor Conditions, Plans and Specifications and other Contract Documents, including addenda, of said Obligee, then this obligation shall become void; otherwise it shall remain in full force and effect.

In the event the Obligee determines the Principal has failed to comply with any requirement as set forth in the preceding paragraph, then the Principal and Surety shall be jointly and severally obligated to pay to the Obligee the difference, not to exceed the full penal sum set forth above, between the amount specified in the Principal's bid and such larger amount for which the Obligee may contract with another party to perform the work covered by said bid, together with all court costs, all attorney's fees and any other expense of recovery.

IN TESTIMONY WHEREOF, the said Principal and said Surety have caused this instrument to be signed by their respective officers and their corporate seals to be hereunto affixed this 24th day of March A.D. 2022.

(Witness)

Industrial Power Solutions, LLC
(Principal) (Seal)

(Title)

(Witness)

Merchants National Bonding, Inc.
(Surety) (Seal)

Melanie Ankeney, Attorney-In-Fact (Title)

MERCHANTS
BONDING COMPANY

POWER OF ATTORNEY

Know All Persons By These Presents, that MERCHANTS BONDING COMPANY (MUTUAL) and MERCHANTS NATIONAL BONDING, INC., both being corporations of the State of Iowa (herein collectively called the "Companies") do hereby make, constitute and appoint, individually,

Chrystal Hedges; David J McKee; Jennifer Castillo; Joseph A Clarken III; Melanie Ankeney; Patrick R Hedges; Ted H Rarrick

their true and lawful Attorney(s)-in-Fact, to sign its name as surety(ies) and to execute, seal and acknowledge any and all bonds, undertakings, contracts and other written instruments in the nature thereof, on behalf of the Companies in their business of guaranteeing the fidelity of persons, guaranteeing the performance of contracts and executing or guaranteeing bonds and undertakings required or permitted in any actions or proceedings allowed by law.

This Power-of-Attorney is granted and is signed and sealed by facsimile under and by authority of the following By-Laws adopted by the Board of Directors of Merchants Bonding Company (Mutual) on April 23, 2011 and amended August 14, 2015 and adopted by the Board of Directors of Merchants National Bonding, Inc., on October 16, 2015.

"The President, Secretary, Treasurer, or any Assistant Treasurer or any Assistant Secretary or any Vice President shall have power and authority to appoint Attorneys-in-Fact, and to authorize them to execute on behalf of the Company, and attach the seal of the Company thereto, bonds and undertakings, recognizances, contracts of indemnity and other writings obligatory in the nature thereof."

"The signature of any authorized officer and the seal of the Company may be affixed by facsimile or electronic transmission to any Power of Attorney or Certification thereof authorizing the execution and delivery of any bond, undertaking, recognizance, or other suretyship obligations of the Company, and such signature and seal when so used shall have the same force and effect as though manually fixed."

In connection with obligations in favor of the Florida Department of Transportation only, it is agreed that the power and aut hority hereby given to the Attorney-in-Fact includes any and all consents for the release of retained percentages and/or final estimates on engineering and construction contracts required by the State of Florida Department of Transportation. It is fully understood that consenting to the State of Florida Department of Transportation making payment of the final estimate to the Contractor and/or its assignee, shall not relieve this surety company of any of its obligations under its bond.

In connection with obligations in favor of the Kentucky Department of Highways only, it is agreed that the power and authority hereby given to the Attorney-in-Fact cannot be modified or revoked unless prior written personal notice of such intent has been given to the Commissioner-Department of Highways of the Commonwealth of Kentucky at least thirty (30) days prior to the modification or revocation.

In Witness Whereof, the Companies have caused this instrument to be signed and sealed this 4th day of September , 2020 .

MERCHANTS NATIONAL BONDING, INC. -o- 2003

MERCHANTS BONDING COMPANY (MUTUAL) INCORPORATED -o- 1933

MERCHANTS BONDING COMPANY (MUTUAL)
MERCHANTS NATIONAL BONDING, INC.

By Larry Taylor
President

STATE OF IOWA
COUNTY OF DALLAS ss

On this 4th day of September 2020 , before me appeared Larry Taylor, to me personally known, who being by me duly sworn did say that he is President of MERCHANTS BONDING COMPANY (MUTUAL) and MERCHANTS NATIONAL BONDING, INC.; and that the seals affixed to the foregoing instrument are the Corporate Seals of the Companies; and that the said instrument was signed and sealed in behalf of the Companies by authority of their respective Boards of Directors.

NOTARIAL SEAL IOWA

POLLY MASON
Commission Number 750576
My Commission Expires
January 07, 2023

Polly Mason
Notary Public

(Expiration of notary's commission does not invalidate this instrument)

I, William Warner, Jr., Secretary of MERCHANTS BONDING COMPANY (MUTUAL) and MERCHANTS NATIONAL BONDING, INC , do hereby certify that the above and foregoing is a true and correct copy of the POWER-OF-ATTORNEY executed by said Companies, which is still in full force and effect and has not been amended or revoked.

In Witness Whereof, I have hereunto set my hand and affixed the seal of the Companies on this 24th day of March , 2022 .

MERCHANTS NATIONAL BONDING, INC. -o- 2003

MERCHANTS BONDING COMPANY (MUTUAL) INCORPORATED -o- 1933

William Warner Jr.
Secretary

POA 0018 (1/20)

Added Electrical Breakout		
Area	**$**	**MH**
Existing Aeration Blower Rm (E-3.01)	$92,897.00	665.71
Electrical Bldg (E-3.02/3.03)	$1,935,694.00	4,670.65
Membrane Filtration (E-3.04/306)	$1,081,079.00	9,114.24
Blower Bldg (E-3.07/3.08)	$537,986.00	4,417.10
Chemical Feed (E-3.09/3.11/3.13)	$819,675.00	6,633.08
Chlorine Contact Basin (E-3.12)	$50,657.00	440.78
Existing Admin Electrical Bldg & Effluent PS Control Rm (E-3.14)	$28,070.00	196.07
Raw Water Pump Station (E-3.15/E3.16)	$710,190.00	4,412.91
Site Work	$1,160,038.00	6,216.26
Temp Electrical	$45,000.00	200.00

*Site work to include light pole demo and ductbank work

BID PROPOSAL

Date 03/25/2022

Bid Proposal of * Wilson Electric Services Corp (hereinafter called "Bidder")

a ** Corporation organized and existing under the laws of the State of

Arizona.

* Insert name of firm.
** Insert corporation, partnership, or individual, as applicable.

(INSERT OWNER'S ADDRESS)
TO: McCarthy Building Companies, Inc.
6225 North 24th Street, Suite 200
Phoenix, Arizona 85016

The Bidder, in compliance with your Invitation for Bids for the construction of Chandler Reclaimed Water Interconnect Facility having examined the Contract Documents entitled City of Chandler, Reclaimed Water Interconnect Facility Project, and other related documents and being familiar with the site of the proposed work, and with all of the conditions surrounding the construction of the proposed project including the availability of materials and labor, and the progress of work to date, if any, hereby proposes to furnish all labor, materials, tools, equipment, machinery, equipment rental, transportation, superintendence, perform all work, provide all services, and to construct all work in accordance with the Contract Documents set forth herein, and at the prices stated below. These prices are to cover all expenses incurred in performing the work required.

The Bidder shall attach a copy of Bidders' detailed estimate to its Bid Proposal. This estimate shall identify all quantities shown in the documents or anticipated along with corresponding labor, material and equipment pricing.

After Bid Proposals are received, tabulated, and evaluated by McCarthy, said Bidder agrees to meet with McCarthy for the purpose of determining any duplications, omissions, or mutually agreed bid adjustments. For these meetings, the Bidder agrees to provide a complete, detailed cost breakdown; a list of all sub-subcontractors proposed for use in the work; and a list of all items, materials and their manufacturers proposed for use in the work.

The Bidder, if awarded a Subcontract, agrees to commence work and to fully complete its Work in accordance with a schedule to be established in collaboration with McCarthy under the provisions of the Additional Subcontractor Conditions of the Specifications.

The Bidder acknowledges receipt of the following Addenda: 1

.

BASE BID:

The Bidder agrees to perform all Electrical and Instrumentation (herein insert the title of the Work Category as it appears in the Additional Subcontractor Conditions) Work for Work Category No. 16A, as described in the Contract Documents, for the Lump Sum of Seven Million Five Hundred Eight One Thousand and Eight Hundred DOLLARS ($ 7,581,800.00).

BID BREAKDOWN:

Raw Water PS	$ 993,070.00
Membrane Facility/Strainer	$ 1,368,214.00
Chemical Facility	$ 1,188,182.00
Blower Building	$ 411,774.00
Electrical Building	$ 2,284,596.00
Site Work	$ 656,005.00
Performance & Payment Bond Cost *(If Applicable)*	$ Included in Line Items Above
Total Subcontract Amount	$ 7,581,800.00

The name of the proposed Bonding Company is Minard Ames

Bond rate 1 %

All applicable taxes, except sales and use taxes on materials and equipment which are affixed and made a part of the real estate of the Project, are included in the above Base Bid. Bidder agrees that this Bid Proposal shall be good and may not be withdrawn unless McCarthy does not send Bidder a Subcontract within one hundred eighty (180) calendar days after the opening date of Bid Proposals.

(Amounts shall be shown in both words and figures. In case of discrepancy, the amount shown in words will govern.)

ALTERNATES:

The Bidder further agrees that if any or all of the Alternates listed and described below are incorporated and accepted within sixty (60) calendar days after receipt of a Subcontract from McCarthy, the Bidder will adjust its Subcontract by the amount indicated opposite the Alternates listed below.

ALTERNATE NO. 1: Canopy and Bridge Crane @ Membrane Facility:

ADD the sum of $_____.

CHANGE ORDER RATES: (Add separate sheet as needed)

Markup % (on rates and material): 15% .

Position: Journeyman Rate: $72.00 .

Equipment: _____ Rate: _____.

The Bidder understands that McCarthy reserves the right to reject any or all Bid Proposals and to waive any informalities or irregularities therein.

SELECT AS APPROPRIATE

☐ The Bidder has completed the Prequalification Form together with all other required data for McCarthy's' Contractor Default Insurance Program; OR

☐ The Bidder has not completed the Prequalification Form together with all other required data for McCarthy's' Contractor Default Insurance Program because the Bidder has provided the Form and all such information to McCarthy in the past 12 months for the following project:

_____ Project, which bid on: _____.

RESPONSIVE BID REQUIREMENTS:

DO NOT ENCLOSE YOUR STANDARD TERMS AND CONDITIONS

If any exceptions are taken to the requirements of this Proposal form, attach a separate sheet listing those exceptions, stating the sections and paragraphs and the specific exception.	SB (initials)
In submitting this proposal, the Bidder certifies that this bid is valid for 180 calendar days.	(initials)
In submitting this Proposal as described herein, we agree to complete the work in accordance with the included Preliminary Construction Sequence.	SB (initials)
In submitting this Proposal, the Bidder certifies that all cost for extended warranties to start on the date of Substantial Completion is included.	SB (initials)
In submitting this proposal as described herein, we confirm that we have received, reviewed and agree to all commercial terms stated in the McCarthy Subcontract and Purchase Order Agreement. Any exception taken to the commercial terms stated in these Agreements must be listed on a separate sheet noting the article or paragraph and the specific exception. ***Bidders attached Standard Terms and Conditions will not be acknowledged or accepted as part of any given bid.***	SB (initials)
In submitting this proposal as described herein, the Bidder certifies that this bid is coordinated based on a complete set of documents and that there will be no claims for change order based on the assertion that the Bidder did not have a complete set of Bidding Documents.	SB (initials)
In submitting this proposal, the Bidder certifies that they have included all spare parts, training, O & M Manuals, shop drawings and administration costs as associated to comply with the requirements of the specifications and as listed for their scope of work.	SB (initials)
A bid will be considered non-responsive if the Subcontractor Pre-Qualification Form is not completed as part of the Bid Form **(or on file at McCarthy office)**.	SB (initials)
The Bidder, by submitting their bid, represents that they have read and understand the scope requirements of the Bidding Documents.	SB (initials)
The Bidder certifies that any proposed materials in this scope of work meet or exceeds the requirements stated in the specifications unless noted otherwise within this proposal.	SB (initials)

The bidder certifies that the price listed in this bid is a firm Price through the final delivery of the materials proposed herein, and that no material escalation will be accepted as part of this proposal.	(initials)

Within fifteen (10) days after receipt by the Bidder from McCarthy of the Subcontract or Purchase Order, the Bidder will execute and return to McCarthy said Subcontract or Purchase Order and if notified from McCarthy that Bidder is not to be enrolled in McCarthy's Contractor Default Insurance Program, deliver to McCarthy Performance and Labor and Material Payment Bonds for the Subcontract or a Supply Contract Bond for the Purchase Order, or the difference between the amount of the bid and such larger amount for which McCarthy may subcontract with another party to perform the work covered by said bid, together with all court costs, all attorney fees and all other expense of recovery, all of which shall not exceed the Bid Security attached in the amount of 15% of the bid, will become the property of McCarthy. The bonds shall name McCarthy as Obligee.

If an Individual:

Authorized Signature: _____

Name (print): _____

Email: _____

Business Address: _____

_____

If a Partnership:

Authorized Signature: _____

Name (print): _____

Email: _____

Authorized Signature: _____

Name (print): _____

Email: _____

Business Address: _____

_____

If a Corporation:

Authorized Signature: Tim Hunt

Name (print): Tim Hunt

Email: thunt@wilsonelectric.net

Title: Division Manager

Business Address: 600 E Gilbert Dr, Tempe, AZ 85281

_____

Telephone 602-910-9406

Contractor License Number: RO C181771/RO C181772/RO C181766

General Liability Insurance Carrier (not the agent): Arch Insurance Company

*Please attach a sample certificate of insurance and current W9 form to your bid.

Chandler Reclaimed Water Interconnect Facility GMP 2
3/25/2022

Added Electrical Breakout		
Area	$	MH (Indirect + Direct)
Existing Aeration Blower Rm (E-3.01)	$ 524,724.00	236
Electrical Bldg (E-3.02/3.03)	$ 2,284,596.00	6180
Membrane Filtration (E-3.04/306)	$ 1,368,214.00	8852
Blower Bldg (E-3.07/3.08)	$ 411,774.00	3192
Chemical Feed (E-3.09/3.11/3.13)	$ 1,188,182.00	8675
Chlorine Contact Basin (E-3.12)	$ 130,235.00	875
Existing Admin Electrical Bldg & Effluent PS Control Rm (E-3.14)	Added in Chemical Feed	
Raw Water Pump Station (E-3.15/E3.16)	$ 993,070.00	4598
Site Work	$ 656,005.00	5159
Temp Electrical	$ 25,000.00	80

*Site work to include light pole demo and ductbank work

$	**7,581,800.00**	**37847**

Wilson Electric

600 E. Gilbert Drive
Tempe, AZ 85281
(480) 505-6600

Project Name/Address
City of Chandler Reclaimed Water Interconnect Facility Project No. W1901.203

Customer Name/Address	Customer Phone	Proposal No.	
McCarthy Building Companies 6225 N. 24th St. Suite 200 Phoenix, AZ 85016	480-417-9506	211500172	
	Customer E-mail		
	nazuri@mccarthy.com		

Wilson Electric is pleased to present its Proposal to furnish all necessary supervision, labor, materials, tools, and equipment (except as noted to be furnished or installed by others) for the performance of Electrical and Instrumentation work for the subject project. Our pricing is based on the Wilson Engineers Submittal documents of February 2022 for City of Chandler Reclaimed Water Interconnect Facility. Project No. W1901.203. We Acknowledge Addendum 1

Cost of Proposal	
• Bid Item #1: Existing aeration Blower Room:	$524,724.00
• Bid item #2: RWIF Electrical Building:	$2,284,596.00
• Bid Item #3: Membrane Filtration System	$1,368,214.00
• Bid Item #4: RWIF Blower Building:	$411,774.00
• Bid Item #5 & 7: MFS Chemical Feed Area & Existing Admin Building:	$1,188,182.00
• Bid Item #6: Chlorine Contact Basin:	$130,2353.00
• Bid Item #8: Raw Water Pump Station:	$993,070.00
• Bid Item #9: Site Work	$656,005.00
• Bid Item #10: Temporary Electrical Work	$25,000.00
Total with Bond	**$7,487,933.00**
Bid Total	**$7,581,800.00**

Scope of Work

The following is a summary of the scope of work envisioned in our proposal:

- Electrical and Instrumentation per the Wilson Engineers Contract documents.

Estimate Notes:

- This budget includes 25,000 hours of direct craft labor. We have budgeted for approximately a one-year duration. This direct labor budget equates into an approximate field crew of 10 workers. We have included an indirect labor budget of 12,847 hours. The breakout for indirect labor is a full-time project Superintendent, a 50%-time Project Engineer, a 50%-time Project Manager, and a 3-month duration for a wiring coordinator.
- The Conduit Schedule was used as a bases for all control conduits for the budget.
- Site Work include Excavation and Backfill, Underground Duct Banks, Site Lighting, and initial investigation.
- Mobilization, office set-up, office supplies, tools & supplies for manpower productivity have been included in budget of each Bid Items mentioned above.
- Underground Duct Banks to be routed per the February 2022 Contract Drawings set.

Scope of Work

Electrical and Instrumentation Work to include:

1. Existing Aeration Blower Room:
    - Existing MCC-BL1-A and MCC-BL1-B Buckets.
    - Conduit and Conductor per Plan and Specification.
    - Pull Box on exterior wall of Existing Building per Plan and Specification.
2. RWIF Electrical Building:
    - Manholes per Plan and Specification.
    - 2-600A Disconnects DSC-RWIF-A & DSC-RWIF-B.
    - 2-750KVA Oil Filled Transformers XFMR-RWIF-A and XFMR-RWIF-B.
    - Low-Voltage Switchgear MCC-RWIF-A and MCC-RWIF-B.
    - Panelboards PP-RWIF and LP-RWIF and 45KVA Transformer XFMR-L-RWIF.
    - 30A Disconnect for A/C Unit DSC-ACU-100.
    - Instrumentation and Controls to include PLC-RWIF, and ECOM-RWIF.
    - Fire Alarm System Panel per Plan and Specification.
    - All associated Conduits and Conductors per Conduit Schedule.
3. Membrane Filtration System:
    - 4-200A Disconnect Switches for Permeate Pumps, DSC-PP-100, DSC-PP-200, DSC-PP-300, and DSC-PP-400.
    - 6-30A Disconnect Switches for DSC-SD-100, DSC-SD-200, DSC-SD-300, DSC-CIP-710, DSC-CIP-720 and DSC-ILM-100.
    - Lighting Contactor LC-MFS-100.
    - Instrumentation per attached BOM.
    - All associated Conduits and Conductors per Conduit Schedule.
4. RWIF Blower Building:
    - 2-200A Disconnect Switches for Blowers, DSC-BLO-100, and DSC-BLO-200.
    - 1-60A Disconnect Switch for Transformer, DSC-XFMR-BLR.
    - 3-30A Disconnect Switches, DSC-AIC-010, DSC-AIC-020, and DSC-ECU-100.
    - 30KVA Transformer XFMR-L-BLR.
    - Panelboard PP-BLR-A.
    - Instrumentation to include Thermal Mass Flowmeter FIT/FE-030 and Pressure Transmitter PIT-031.
    - All associated Conduits and Conductors per Conduit Schedule.
5. MFS Chemical Feed Area:
    - Lighting Contactor LC-CFF-100
    - Instrumentation per attached BOM.
    - All associated Conduits and Conductors per Conduit Schedule.
6. Chlorine Contact Basin and Existing Admin Building:
    - Instrumentation to Include RWIF Composite Sampler CCB-003-SLP and Sample Pump ECP-CCB-SMP3.
    - All associated Conduits and Conductors per Conduit Schedule.
7. Raw Water Pump Station:
    - 400A Service Entrance Section SES-RWPS-1.
    - 600A Motor Control Center MCC-RWPS-1.
    - 400A Manual Transfer Switch MTS-RWPS.
    - 15KVA Transformer XFMR-L-RWPS-1.
    - 30A Disconnect Switch DSC-RW-001.
    - Panelboard PP-RWPS-1.
    - 400A Generator Connection Panel GEN-CONN-RWPS.
    - Instrumentation per attached BOM.
    - All associated Conduits and Conductors per Panel Schedule.

Scope of Work

8. Site Work:
    - Underground Duct Bank per Plan and Specification.
    - Excavation and Backfill per Plan and Specification.
    - Site Electrical work per Plan and Specification.
    - All associated Conduit and Commodities per plan and specification.
9. Temporary Electrical Work:
    - Supply and install of Temporary Electrical Power to the Jobsite Trailer.

Basis of Proposal

-Performance of all work is based on a forty (40) hour work week, Monday through Friday.
-This Proposal is based upon timely completion of a mutually agreed-upon construction schedule.
-The contractual Agreement resulting from acceptance of this Proposal is to be based on AGC Document No. 640, "Standard Form Construction Subcontract," or other mutually acceptable form.
-A mutually acceptable schedule of values will be negotiated to include a mobilization fee.
-We will participate with other contractual parties in the preparation of any necessary coordination and detailing drawings, with CAD input by others. We will maintain red-line drawings on site, with permanent as-built drawings to be prepared in the specified format by the prime contractor.
- We have included clean-up of our own operations only, with debris being deposited into containers supplied by others and in accordance with any site waste management/recycling plan.
-We will install electrical control panels furnished loose by Divisions aside from Division 16
-We will install electrical instruments furnished under other Divisions or by the Owner, except those which are to be preinstalled or shipped loose to be installed on equipment skids (as specified in other Divisions)

Exclusions

We have excluded any costs for the following items:
-Overtime or shift work except as required to support off-hour shutdown work or maintenance of plant operations
-Permanent or temporary power consumption, nor for connection or construction fees charged by the electrical utility
-Electrical construction permit, sales or use taxes, or bonding
~~-Excavation, encasement, backfill of any electrical or communications duct banks, conduit or manholes~~.
-Concrete housing pads
-Piping, tubing, flanges, valves, installation of flow tube inline instruments, and pipe taps for field instruments

We have excluded the following services from our bid:
-Patching and painting, other than paint touch-up of equipment supplied by us
-Furnishing and installation of any mechanical equipment of related controls not specified in Division 16
-Installation of those instruments which are in-line or process connected (by the mechanical contractor)
-Furnishing and installation of any motors
~~-Concrete or Asphalt cutting, removal, or patching~~.
-Programming or configuration of PLC.

Clarifications

Total material cost for this budget is approximately: $5,071,491.00
Included in this budget is a $45,000.00 budget for NETA testing.
Per our walkthrough, we have estimated the duct bank on this project as a full electrical install. We have included, sawcut, asphalt removal, excavation, rebar installs, conduit install, concrete encasement of duct bank, backfill of trenches, required street plates, required barriers, AB backfill, and asphalt patch.

RWIF Electrical Building Price is not included in this Bid Proposal. We will follow-up on the Electrical Building pricing once we have a Quote from our Vendor.

Material Volatility Disclaimer

MATERIAL PRICE VOLATILITY DISCLAIMER: Commodity and material pricing has recently been extremely volatile and most of our suppliers have put Wilson Electric Services Corp. on notice of both price changes and/or the inability of the supplier to guarantee pricing in the current environment. Additionally, lead times for the materials and equipment we install may be much longer than what we have previously come to expect. As such, prices for quoted materials and commodities and lead times are not able to be guaranteed at the time of our proposal to you unless we distinctly identify certain components of the work are guaranteed pricing/delivery in this proposal. All other prices set forth herein are subject to adjustment by Manufacturer/Seller in accordance with its pricing policies in effect at the time of shipment unless manufacturers will accept more favorable terms. To be clear, some electrical suppliers will not currently provide binding quotations to electrical contractors; or some that do reserve their right to reprice their quote at the prevailing pricing at time of shipment. Working together, we can provide options for early ordering and delivery to the project site as authorized by you, though in these cases we will require written confirmation from you that we will be paid for stored materials. Until such time that we receive said authorization, commodity and material prices are subject to market fluctuation. We appreciate your understanding in these unique times and please be assured that Wilson Electric is continually looking at all options available to mitigate the volatility the market is experiencing.

Signature: _____

MEMBRANE FITRATION SYSTEM

Item	Qty.	Catalog Number/ Description
1	1	**Float Switch** LSH-001
2	1	**Flow Switch** FSH-001
3	1	**Pressure Gauge** PI-507
4	1	**Temperature Indication** TIT-001
5	1	**18" Magnetic Flowmeter** FE/FIT-510
6	1	**N4X Emergency Stop CS** ES-ILM-100
7	2	**ACH Eyewash Flow Switch** FSH-026, 028
8	4	**ACH Metering Pump Pressure Gauge** PI-610, 611, 620, 621
9	4	**Diaphragm Seal (Chem)**
10	2	**ACH Metering Pump Pressure Switch** PSH-611, 621
11	2	**Diaphragm Seal (Chem)**
12	1	**ACH Metering Pump Magnetic Flowmeter (1/4")** FIT/FE-630
13	2	**ACH Metering Sump Float Switch** LSH-025, 027

MFS CHEM FEED AREA

Item	Qty.	Catalog Number/ Description
1	1	**Sodium Hypochlorite Storage Tank LCP** Nema 4X Enclosure, CB, Horn, Beacon, Panel Meter, Pushbutton, Terminals, etc.
2	1	**Sodium Hypochlorite Ultrasonic Level Transmitter** LE/LIT-001
3	2	**Sodium Hypochlorite Sump Float Switch** LSH-002, 003
4	3	**Eyewash Flow Switch** FS-004, 005, 010
5	4	**Sodium Hypo Metering Pump Pressure Gauge** PI-110, 111, 120, 121
6	4	**Diaphragm Seal (Chem)**
7	2	**Sodium Hypo Metering Pump Pressure Switch** PSH-111, 121
8	2	**Diaphragm Seal (Chem)**
9	1	**Sodium Hypo Metering Pump Magnetic Flowmeter (1/4")** FIT/FE-130
10	4	**Citric Acid Metering Pump Pressure Gauge** PI-210, 211, 220, 221
11	4	**Diaphragm Seal (Chem)**
12	2	**Citric Acid Metering Pump Pressure Switch** PSH-211, 221
13	2	**Diaphragm Seal (Chem)**
14	1	**Citric Acid Metering Pump Magnetic Flowmeter (1/4")** FIT/FE-230
15	1	**Citric Acid Sump Float Switch** LSH-009
16	2	**Sulfuric Acid Metering Pump Pressure Gauge** PI-310, 311
17	2	**Diaphragm Seal (Chem)**
18	1	**Sulfuric Acid Metering Pump Pressure Switch** PSH-311
19	1	**Diaphragm Seal (Chem)**
20	1	**Sulfuric Acid Metering Pump Magnetic Flowmeter (1/4")** FIT/FE-330
21	1	**Sulfuric Acid Sump Float Switch** LSH-013
22	2	**Sodium Bisulfate Metering Pump Pressure Gauge** PI-410, 411
23	2	**Diaphragm Seal (Chem)**

MFS CHEM FEED AREA

Item	Qty.	Catalog Number/ Description
24	1	**Sodium Bisulfate Metering Pump** PSH-411
25	1	**Diaphragm Seal (Chem)**
26	1	**Sodium Bisulfate Metering Pump Magnetic Flowmeter (1/4")** FIT/FE-430
27	1	**Sodium Bisulfate Sump Float Switch** LSH-017
28	2	**Sodium Hydroxide Metering Pump Pressure Gauge** PI-510, 511
29	2	**Diaphragm Seal (Chem)**
30	1	**Sodium Hydroxide Metering Pump Pressure Switch** PSH-511
31	1	**Diaphragm Seal (Chem)**
32	1	**Sodium Hydroxide Metering Pump Magnetic Flowmeter (1/4")** FIT/FE-530
33	1	**Sodium Hydroxide Sump Float Switch** LSH-021
34	4	**Disinfection Sodium Hypo Metering Pump Pressure Gauge** PI-810, 811, 820, 821
35	4	**Diaphragm Seal (Chem)**
36	2	**Disinfection Sodium Hypo Metering Pump Pressure Gauge** PSH-811, 821
37	2	**Diaphragm Seal (Chem)**

Raw Water Pump Station

Item	Qty.	Catalog Number/ Description
1	1	**LCP-RW-XXX** Nema 4X Enclosure, Pilot Lights, Terminals, etc.
2	9	**Pressure Gauge** PI-101, 201, 301, 110, 111, 210, 211, 310, 311
3	3	**Diaphragm Seal (SS)**
4	3	**Pressure Switch** PSH-101, 201, 301
5	3	**Diaphragm Seal (SS)**
6	1	**Ultrasonic Level Transmitter** LE/LIT-003
7	1	**Float Switch** LSLL-004
8	1	**18" Magnetic Flowmeter** FE/FIT-012
9	1	**Turbidity Analyzer** AE/AIT-00
10	3	**N4X Emergency Stop CS** HS-100, 200, 300
11	4	**Intrusion Switches** ZS- 016, 017A, 017B, 017C

McCarthy Subcontractor Outreach

Chandler Reclaimed Water Interconnect Facility

Company/ Description	Timestamp	Type	Subject
01C - Quality Control Testing			
ACS Services LLC	Feb 28, 2022 at 8:11 PM	Bid Invite	Invitation to Bid
	Mar 4, 2022 at 9:41 AM	Message	Chandler RWIF- Addenda 1
	Mar 4, 2022 at 10:21 AM	Message	Chandler RWIF- Addenda 1 REV 1
	Mar 16, 2022 at 9:53 AM	Message	Questions
	Mar 22, 2022 at 11:14 AM	Internal Note	3/22 - Spoke to Brandy she gave me Sean's cell number 4804156870. Called Sean's cell left a message.
	Mar 25, 2022 at 9:49 AM	Message	Addendum 2
Alpha Geotechnical & Materials, Inc.	Feb 28, 2022 at 8:11 PM	Bid Invite	Invitation to Bid
	Mar 4, 2022 at 9:41 AM	Message	Chandler RWIF- Addenda 1
	Mar 4, 2022 at 10:21 AM	Message	Chandler RWIF- Addenda 1 REV 1
	Mar 16, 2022 at 9:53 AM	Message	Questions
	Mar 22, 2022 at 11:19 AM	Internal Note	3/22 @ 11:17 am Spoke with Alf, it is on Aaron Tiemann plate and he will send it to Ben Whitlock
	Mar 25, 2022 at 9:49 AM	Message	Addendum 2
Ninyo & Moore Geotech & Enviro Consultant	Feb 28, 2022 at 8:11 PM	Bid Invite	Invitation to Bid
	Mar 4, 2022 at 9:41 AM	Message	Chandler RWIF- Addenda 1
	Mar 4, 2022 at 10:21 AM	Message	Chandler RWIF- Addenda 1 REV 1
	Mar 10, 2022 at 3:23 PM	Internal Note	3/10 @3:21pm Spoke with Jony, the project is currently being reviewed. Stated she would have a better idea most likely by monday the 3/14.
	Mar 16, 2022 at 9:53 AM	Message	Questions
	Mar 22, 2022 at 11:27 AM	Internal Note	3/22 @11:25am spoke with Jony, Ralph is taking care of the project- talked with him and he will be sending some thing this Friday's Bid day.
	Mar 25, 2022 at 9:49 AM	Message	Addendum 2
Smith & Annala Engineering Co. (SAECO)	Feb 28, 2022 at 8:11 PM	Bid Invite	Invitation to Bid
	Mar 4, 2022 at 9:41 AM	Message	Chandler RWIF- Addenda 1
	Mar 4, 2022 at 10:21 AM	Message	Chandler RWIF- Addenda 1 REV 1
	Mar 16, 2022 at 9:53 AM	Message	Questions
	Mar 22, 2022 at 11:23 AM	Internal Note	3/22 @ 11:22 called Jesse, they txt me back that they would call me back after their meeting. And that they are working on it and will have something back to me soon.
	Mar 25, 2022 at 9:49 AM	Message	Addendum 2
Western Technologies Inc.	Feb 28, 2022 at 8:11 PM	Bid Invite	Invitation to Bid
	Mar 4, 2022 at 9:41 AM	Message	Chandler RWIF- Addenda 1
	Mar 4, 2022 at 10:21 AM	Message	Chandler RWIF- Addenda 1 REV 1
	Mar 16, 2022 at 9:53 AM	Message	Questions
	Mar 22, 2022 at 11:28 AM	Internal Note	3/22 @ 11:28 am I called and left a message for Ron.
	Mar 25, 2022 at 9:49 AM	Message	Addendum 2
01E - Surveying			
82 Bravo LLC	Feb 28, 2022 at 8:11 PM	Bid Invite	Invitation to Bid
	Mar 4, 2022 at 9:41 AM	Message	Chandler RWIF- Addenda 1
	Mar 4, 2022 at 10:21 AM	Message	Chandler RWIF- Addenda 1 REV 1
	Mar 15, 2022 at 12:20 PM	Internal Note	3/15/22 @ 12:19pm spoke with Steve. Stated that the Surveyor who does the bids is currently out of office. He took a message and would get it to him.
	Mar 16, 2022 at 9:53 AM	Message	Questions
	Mar 25, 2022 at 9:49 AM	Message	Addendum 2
D2 Surveying LLC	Feb 28, 2022 at 8:11 PM	Bid Invite	Invitation to Bid
	Mar 4, 2022 at 9:41 AM	Message	Chandler RWIF- Addenda 1
	Mar 4, 2022 at 10:21 AM	Message	Chandler RWIF- Addenda 1 REV 1
	Mar 15, 2022 at 12:22 PM	Internal Note	3/15/22 @12:21pm called and left a message for Jeremy
	Mar 16, 2022 at 9:53 AM	Message	Questions
	Mar 25, 2022 at 9:49 AM	Message	Addendum 2
DBE Surveying, L.L.C.	Feb 28, 2022 at 8:11 PM	Bid Invite	Invitation to Bid
	Mar 4, 2022 at 9:41 AM	Message	Chandler RWIF- Addenda 1
	Mar 4, 2022 at 10:21 AM	Message	Chandler RWIF- Addenda 1 REV 1

McCarthy Subcontractor Outreach

Chandler Reclaimed Water Interconnect Facility

Company/ Description	Timestamp	Type	Subject
	Mar 15, 2022 at 12:25 PM	Internal Note	3/15 @ 12:23pm spoke with Aaron and stated they are way too busy currently and will not be bidding the project mentioned that we should try a company called Benchmark.
JT2 Enterprises, LLC	Feb 28, 2022 at 8:11 PM	Bid Invite	Invitation to Bid
Lemme Associates AZ	Feb 28, 2022 at 8:11 PM	Bid Invite	Invitation to Bid
	Mar 4, 2022 at 9:41 AM	Message	Chandler RWIF- Addenda 1
	Mar 4, 2022 at 10:21 AM	Message	Chandler RWIF- Addenda 1 REV 1
	Mar 15, 2022 at 12:29 PM	Internal Note	3/15/22 @ 12:29pm spoke with Nicole, she stated she would print out the drawings and see about getting a cost out to me today.
	Mar 16, 2022 at 9:53 AM	Message	Questions
	Mar 25, 2022 at 9:49 AM	Message	Addendum 2
Southwest Survey Solutions	Feb 28, 2022 at 8:11 PM	Bid Invite	Invitation to Bid
	Mar 4, 2022 at 9:41 AM	Message	Chandler RWIF- Addenda 1
	Mar 4, 2022 at 10:21 AM	Message	Chandler RWIF- Addenda 1 REV 1
	Mar 15, 2022 at 12:32 PM	Internal Note	3/15/22 @ 12:31pm spoke with Todd, stated he would send me an hourly rate price sheet for me to use. Similar to what they are currently doing for us on Improvements.
	Mar 16, 2022 at 9:53 AM	Message	Questions
	Mar 22, 2022 at 11:33 AM	Internal Note	3/22/22 @ 11:33 spoke with Todd and reminded him to send me the hourly rate sheet.
	Mar 25, 2022 at 9:49 AM	Message	Addendum 2
02B.1 - Yard Piping			
ALB Piping Products & Services, LLC.	Feb 28, 2022 at 8:12 PM	Bid Invite	Invitation to Bid
	Mar 4, 2022 at 9:41 AM	Message	Chandler RWIF- Addenda 1
	Mar 4, 2022 at 10:21 AM	Message	Chandler RWIF- Addenda 1 REV 1
	Mar 9, 2022 at 4:40 PM	Internal Note	Sent out pipe material list to Armando 3/9/22 @ 4:40pm
	Mar 14, 2022 at 3:50 PM	Message	Material List - Ready for Pricing
	Mar 16, 2022 at 9:53 AM	Message	Questions
	Mar 25, 2022 at 9:49 AM	Message	Addendum 2
C&B Piping, Inc.	Feb 28, 2022 at 8:12 PM	Bid Invite	Invitation to Bid
	Mar 4, 2022 at 9:41 AM	Message	Chandler RWIF- Addenda 1
	Mar 4, 2022 at 10:21 AM	Message	Chandler RWIF- Addenda 1 REV 1
	Mar 9, 2022 at 4:40 PM	Internal Note	Sent out pipe material list to Jeff 3/9/22 @ 4:40pm
	Mar 14, 2022 at 3:50 PM	Message	Material List - Ready for Pricing
	Mar 16, 2022 at 9:53 AM	Message	Questions
	Mar 25, 2022 at 9:49 AM	Message	Addendum 2
Core and Main	Feb 28, 2022 at 8:12 PM	Bid Invite	Invitation to Bid
	Mar 4, 2022 at 9:41 AM	Message	Chandler RWIF- Addenda 1
	Mar 4, 2022 at 10:21 AM	Message	Chandler RWIF- Addenda 1 REV 1
	Mar 9, 2022 at 4:41 PM	Internal Note	Sent out pipe material list to Steve 3/9/22 @ 4:40pm
	Mar 14, 2022 at 3:50 PM	Message	Material List - Ready for Pricing
	Mar 16, 2022 at 9:53 AM	Message	Questions
	Mar 17, 2022 at 10:22 AM	Internal Note	Spoke with Matt Hutchins. They are still trying to get the bid turned around by the 18th. They said they would have it EOD Monday/Tuesday at the latest.
	Mar 17, 2022 at 10:33 AM	Internal Note	Sent a followup email to Steve to request updated pricing on the Trench Drains
	Mar 25, 2022 at 9:49 AM	Message	Addendum 2
Duncan Bolt	Feb 28, 2022 at 8:12 PM	Bid Invite	Invitation to Bid
	Mar 4, 2022 at 9:41 AM	Message	Chandler RWIF- Addenda 1
	Mar 4, 2022 at 10:21 AM	Message	Chandler RWIF- Addenda 1 REV 1
	Mar 9, 2022 at 4:40 PM	Internal Note	Sent out pipe material list to Brian 3/9/22 @ 4:40pm
	Mar 14, 2022 at 3:50 PM	Message	Material List - Ready for Pricing
	Mar 16, 2022 at 9:53 AM	Message	Questions
	Mar 25, 2022 at 9:49 AM	Message	Addendum 2
Fortiline Waterworks	Feb 28, 2022 at 8:12 PM	Bid Invite	Invitation to Bid
	Mar 4, 2022 at 9:41 AM	Message	Chandler RWIF- Addenda 1
	Mar 4, 2022 at 10:21 AM	Message	Chandler RWIF- Addenda 1 REV 1

McCarthy Subcontractor Outreach

Chandler Reclaimed Water Interconnect Facility

Company/ Description	Timestamp	Type	Subject
	Mar 9, 2022 at 4:41 PM	Internal Note	Sent out pipe material list to Corina 3/9/22 @ 4:40pm
	Mar 16, 2022 at 9:53 AM	Message	Questions
	Mar 25, 2022 at 9:49 AM	Message	Addendum 2
02B.2 - CLSM			
Arizona Materials L.L.C.	Feb 28, 2022 at 8:12 PM	Bid Invite	Invitation to Bid
	Mar 4, 2022 at 9:41 AM	Message	Chandler RWIF- Addenda 1
	Mar 4, 2022 at 10:21 AM	Message	Chandler RWIF- Addenda 1 REV 1
	Mar 16, 2022 at 9:53 AM	Message	Questions
	Mar 25, 2022 at 9:49 AM	Message	Addendum 2
CalPortland	Feb 28, 2022 at 8:12 PM	Bid Invite	Invitation to Bid
	Mar 4, 2022 at 9:41 AM	Message	Chandler RWIF- Addenda 1
	Mar 4, 2022 at 10:21 AM	Message	Chandler RWIF- Addenda 1 REV 1
	Mar 16, 2022 at 9:53 AM	Message	Questions
	Mar 25, 2022 at 9:49 AM	Message	Addendum 2
CEMEX	Feb 28, 2022 at 8:12 PM	Bid Invite	Invitation to Bid
	Mar 4, 2022 at 9:41 AM	Message	Chandler RWIF- Addenda 1
	Mar 4, 2022 at 10:21 AM	Message	Chandler RWIF- Addenda 1 REV 1
	Mar 16, 2022 at 9:53 AM	Message	Questions
	Mar 25, 2022 at 9:49 AM	Message	Addendum 2
Lehigh Hanson	Feb 28, 2022 at 8:12 PM	Bid Invite	Invitation to Bid
	Mar 4, 2022 at 9:41 AM	Message	Chandler RWIF- Addenda 1
	Mar 4, 2022 at 10:21 AM	Message	Chandler RWIF- Addenda 1 REV 1
	Mar 16, 2022 at 9:53 AM	Message	Questions
	Mar 25, 2022 at 9:49 AM	Message	Addendum 2
02B.3 - Aggregate & Trucking			
Buesing Corp.	Feb 28, 2022 at 8:12 PM	Bid Invite	Invitation to Bid
	Mar 4, 2022 at 9:41 AM	Message	Chandler RWIF- Addenda 1
	Mar 4, 2022 at 10:21 AM	Message	Chandler RWIF- Addenda 1 REV 1
	Mar 16, 2022 at 9:53 AM	Message	Questions
	Mar 25, 2022 at 9:49 AM	Message	Addendum 2
Heritage Trucking	Feb 28, 2022 at 8:12 PM	Bid Invite	Invitation to Bid
	Mar 4, 2022 at 9:41 AM	Message	Chandler RWIF- Addenda 1
	Mar 4, 2022 at 10:21 AM	Message	Chandler RWIF- Addenda 1 REV 1
	Mar 16, 2022 at 9:53 AM	Message	Questions
	Mar 25, 2022 at 9:49 AM	Message	Addendum 2
Matt Brown Trucking	Feb 28, 2022 at 8:12 PM	Bid Invite	Invitation to Bid
	Mar 4, 2022 at 9:41 AM	Message	Chandler RWIF- Addenda 1
	Mar 4, 2022 at 10:21 AM	Message	Chandler RWIF- Addenda 1 REV 1
	Mar 16, 2022 at 9:53 AM	Message	Questions
	Mar 25, 2022 at 9:49 AM	Message	Addendum 2
02B.4 - Precast			
CRH Americas	Feb 28, 2022 at 8:12 PM	Bid Invite	Invitation to Bid
	Mar 4, 2022 at 9:41 AM	Message	Chandler RWIF- Addenda 1
	Mar 4, 2022 at 10:21 AM	Message	Chandler RWIF- Addenda 1 REV 1
	Mar 16, 2022 at 9:53 AM	Message	Questions
	Mar 17, 2022 at 10:06 AM	Internal Note	Spoke with kyle. They are working on a proposal and should be getting a number over to us by the 18th.
	Mar 17, 2022 at 10:16 AM	Message	Precast Manhole Lining
	Mar 17, 2022 at 2:35 PM	Internal Note	Received RCP Quote from Kyle. RP 3/17 @ 2:35pm
	Mar 25, 2022 at 9:49 AM	Message	Addendum 2
Degan Construction LLC	Mar 22, 2022 at 3:48 PM	Bid Invite	Invitation to Bid
	Mar 25, 2022 at 9:49 AM	Message	Addendum 2
Olson Pre-cast Company	Feb 28, 2022 at 8:12 PM	Bid Invite	Invitation to Bid
	Mar 4, 2022 at 9:41 AM	Message	Chandler RWIF- Addenda 1
	Mar 4, 2022 at 10:21 AM	Message	Chandler RWIF- Addenda 1 REV 1

McCarthy Subcontractor Outreach

Chandler Reclaimed Water Interconnect Facility

Company/ Description	Timestamp	Type	Subject
	Mar 16, 2022 at 9:53 AM	Message	Questions
	Mar 17, 2022 at 10:16 AM	Message	Precast Manhole Lining
	Mar 25, 2022 at 9:49 AM	Message	Addendum 2
Preach Inc.	Feb 28, 2022 at 8:12 PM	Bid Invite	Invitation to Bid
	Mar 4, 2022 at 9:41 AM	Message	Chandler RWIF- Addenda 1
	Mar 4, 2022 at 10:21 AM	Message	Chandler RWIF- Addenda 1 REV 1
	Mar 17, 2022 at 10:11 AM	Internal Note	Have had email communication with Joel. They are working on getting a price put together. Sent over Spec Section 09910 per Wilson's response in the RFI log.
	Mar 17, 2022 at 10:16 AM	Message	Precast Manhole Lining
	Mar 25, 2022 at 9:49 AM	Message	Addendum 2
Southwest Environmental a division of the AIMS Companies	Feb 28, 2022 at 8:12 PM	Bid Invite	Invitation to Bid
	Mar 4, 2022 at 9:41 AM	Message	Chandler RWIF- Addenda 1
	Mar 4, 2022 at 10:21 AM	Message	Chandler RWIF- Addenda 1 REV 1
	Mar 16, 2022 at 9:53 AM	Message	Questions
	Mar 17, 2022 at 10:04 AM	Internal Note	Updated Point of Contact. George McCloe - 602-750-3105 Estimating@swetinc.com
	Mar 17, 2022 at 10:16 AM	Message	Precast Manhole Lining
	Mar 25, 2022 at 9:49 AM	Message	Addendum 2
02B.5 - SWPPP / Sweeping			
C&S Sweeping Services, Inc.	Feb 28, 2022 at 8:12 PM	Bid Invite	Invitation to Bid
	Mar 4, 2022 at 9:41 AM	Message	Chandler RWIF- Addenda 1
	Mar 4, 2022 at 10:21 AM	Message	Chandler RWIF- Addenda 1 REV 1
	Mar 16, 2022 at 9:53 AM	Message	Questions
	Mar 25, 2022 at 9:49 AM	Message	Addendum 2
Desert Services and SWPP Solutions LLC	Feb 28, 2022 at 8:12 PM	Bid Invite	Invitation to Bid
	Mar 4, 2022 at 9:41 AM	Message	Chandler RWIF- Addenda 1
	Mar 4, 2022 at 10:21 AM	Message	Chandler RWIF- Addenda 1 REV 1
	Mar 16, 2022 at 9:53 AM	Message	Questions
	Mar 25, 2022 at 9:49 AM	Message	Addendum 2
Offsite Sweeping	Feb 28, 2022 at 8:12 PM	Bid Invite	Invitation to Bid
	Mar 4, 2022 at 9:41 AM	Message	Chandler RWIF- Addenda 1
	Mar 4, 2022 at 10:21 AM	Message	Chandler RWIF- Addenda 1 REV 1
	Mar 16, 2022 at 9:53 AM	Message	Questions
	Mar 25, 2022 at 9:49 AM	Message	Addendum 2
02C - Asphalt Paving			
Cactus Asphalt & Transport, Inc.	Feb 28, 2022 at 8:12 PM	Bid Invite	Invitation to Bid
	Mar 4, 2022 at 9:41 AM	Message	Chandler RWIF- Addenda 1
	Mar 4, 2022 at 10:21 AM	Message	Chandler RWIF- Addenda 1 REV 1
	Mar 16, 2022 at 9:53 AM	Message	Questions
	Mar 25, 2022 at 9:49 AM	Message	Addendum 2
L&L Asphalt	Feb 28, 2022 at 8:12 PM	Bid Invite	Invitation to Bid
	Mar 4, 2022 at 9:41 AM	Message	Chandler RWIF- Addenda 1
	Mar 4, 2022 at 10:21 AM	Message	Chandler RWIF- Addenda 1 REV 1
	Mar 16, 2022 at 9:53 AM	Message	Questions
	Mar 25, 2022 at 9:49 AM	Message	Addendum 2
L. Keeley Construction Company	Feb 28, 2022 at 8:12 PM	Bid Invite	Invitation to Bid
	Mar 4, 2022 at 9:41 AM	Message	Chandler RWIF- Addenda 1
	Mar 4, 2022 at 10:21 AM	Message	Chandler RWIF- Addenda 1 REV 1
	Mar 16, 2022 at 9:53 AM	Message	Questions
	Mar 25, 2022 at 9:49 AM	Message	Addendum 2
Viasun Corporation	Feb 28, 2022 at 8:12 PM	Bid Invite	Invitation to Bid
	Mar 4, 2022 at 9:41 AM	Message	Chandler RWIF- Addenda 1
	Mar 4, 2022 at 10:21 AM	Message	Chandler RWIF- Addenda 1 REV 1
	Mar 16, 2022 at 9:53 AM	Message	Questions

McCarthy Subcontractor Outreach

Chandler Reclaimed Water Interconnect Facility

Company/ Description	Timestamp	Type	Subject
	Mar 17, 2022 at 3:06 PM	Internal Note	Spoke with Matt. They are working on getting a quote over for both Asphalt and Site Concrete. Should have by the 18 if not early next week. RP 3/17 2 3:06pm
	Mar 25, 2022 at 9:49 AM	Message	Addendum 2
02D - Site Concrete			
Cactus Asphalt & Transport, Inc.	Feb 28, 2022 at 8:12 PM	Bid Invite	Invitation to Bid
	Mar 4, 2022 at 9:41 AM	Message	Chandler RWIF- Addenda 1
	Mar 4, 2022 at 10:21 AM	Message	Chandler RWIF- Addenda 1 REV 1
	Mar 16, 2022 at 9:53 AM	Message	Questions
	Mar 25, 2022 at 9:49 AM	Message	Addendum 2
J.F. Ellis Corporation	Feb 28, 2022 at 8:12 PM	Bid Invite	Invitation to Bid
	Mar 17, 2022 at 12:36 PM	Internal Note	Spoke with Scott and got an email back that they are declining to bid. RP 3/16/22 @ 9:51am
Keystone Concrete, LLC	Feb 28, 2022 at 8:12 PM	Bid Invite	Invitation to Bid
	Mar 4, 2022 at 9:41 AM	Message	Chandler RWIF- Addenda 1
	Mar 4, 2022 at 10:21 AM	Message	Chandler RWIF- Addenda 1 REV 1
	Mar 16, 2022 at 9:53 AM	Message	Questions
	Mar 25, 2022 at 9:49 AM	Message	Addendum 2
L. Keeley Construction Company	Feb 28, 2022 at 8:12 PM	Bid Invite	Invitation to Bid
	Mar 4, 2022 at 9:41 AM	Message	Chandler RWIF- Addenda 1
	Mar 4, 2022 at 10:21 AM	Message	Chandler RWIF- Addenda 1 REV 1
	Mar 16, 2022 at 9:53 AM	Message	Questions
	Mar 25, 2022 at 9:49 AM	Message	Addendum 2
L.R. Cowan Concrete	Feb 28, 2022 at 8:12 PM	Bid Invite	Invitation to Bid
	Mar 15, 2022 at 2:32 PM	Internal Note	Received an email back from Adam. They are passing on bidding because they don't do Curb & Gutters and sub it all out. RP 3.15.22 @ 2:32PM
Rouser Concrete	Feb 28, 2022 at 8:12 PM	Bid Invite	Invitation to Bid
	Mar 4, 2022 at 9:41 AM	Message	Chandler RWIF- Addenda 1
	Mar 4, 2022 at 10:21 AM	Message	Chandler RWIF- Addenda 1 REV 1
	Mar 15, 2022 at 1:00 PM	Internal Note	Confirmed that they're not bidding. - RP 3.15.22 @ 1:00pm
Sun Valley Masonry	Feb 28, 2022 at 8:12 PM	Bid Invite	Invitation to Bid
	Mar 4, 2022 at 9:41 AM	Message	Chandler RWIF- Addenda 1
	Mar 4, 2022 at 10:21 AM	Message	Chandler RWIF- Addenda 1 REV 1
	Mar 16, 2022 at 9:53 AM	Message	Questions
	Mar 25, 2022 at 9:49 AM	Message	Addendum 2
Viasun Corporation	Feb 28, 2022 at 8:12 PM	Bid Invite	Invitation to Bid
	Mar 4, 2022 at 9:41 AM	Message	Chandler RWIF- Addenda 1
	Mar 4, 2022 at 10:21 AM	Message	Chandler RWIF- Addenda 1 REV 1
	Mar 16, 2022 at 9:53 AM	Message	Questions
	Mar 25, 2022 at 9:49 AM	Message	Addendum 2
02E - Landscaping & Irrigation			
AAA Landscape	Feb 28, 2022 at 8:12 PM	Bid Invite	Invitation to Bid
	Mar 4, 2022 at 9:41 AM	Message	Chandler RWIF- Addenda 1
	Mar 4, 2022 at 10:21 AM	Message	Chandler RWIF- Addenda 1 REV 1
	Mar 16, 2022 at 9:53 AM	Message	Questions
	Mar 17, 2022 at 3:05 PM	Internal Note	Reached out via email to send Favio/Reid bid documents. Will call tomorrow to see if they have any question or if they plan on bidding. RP 3/17 @ 3:05pm
	Mar 22, 2022 at 3:47 PM	Internal Note	Spoke with Favio and Reid. Reid is going to work on getting a quote by EOD 3/23. RP @3:47PM
	Mar 25, 2022 at 9:49 AM	Message	Addendum 2
BrightView Landscape Development, Inc. - Arizona	Feb 28, 2022 at 8:12 PM	Bid Invite	Invitation to Bid
	Mar 4, 2022 at 9:41 AM	Message	Chandler RWIF- Addenda 1
	Mar 4, 2022 at 10:21 AM	Message	Chandler RWIF- Addenda 1 REV 1
	Mar 16, 2022 at 9:53 AM	Message	Questions
	Mar 17, 2022 at 3:05 PM	Internal Note	Reached out via email to send Rob bid documents. Will call tomorrow to see if they have any question or if they plan on bidding. RP 3/17 @ 3:05pm

McCarthy Subcontractor Outreach

Chandler Reclaimed Water Interconnect Facility

Company/ Description	Timestamp	Type	Subject
	Mar 25, 2022 at 9:49 AM	Message	Addendum 2
Gothic Landscape	Feb 28, 2022 at 8:12 PM	Bid Invite	Invitation to Bid
	Mar 17, 2022 at 3:05 PM	Internal Note	Reached out via email to send Rebecca bid documents. Will call tomorrow to see if they have any question or if they plan on bidding. RP 3/17 @ 3:05pm
Sunburst Landscaping, Inc.	Feb 28, 2022 at 8:12 PM	Bid Invite	Invitation to Bid
	Mar 4, 2022 at 9:41 AM	Message	Chandler RWIF- Addenda 1
	Mar 4, 2022 at 10:21 AM	Message	Chandler RWIF- Addenda 1 REV 1
	Mar 16, 2022 at 9:53 AM	Message	Questions
	Mar 17, 2022 at 3:04 PM	Internal Note	Reached out via email to send Robin bid documents. Will call tomorrow to see if they have any question or if they plan on bidding.
	Mar 25, 2022 at 9:49 AM	Message	Addendum 2
03A.1 - Concrete Material Supply			
Arizona Materials L.L.C.	Feb 28, 2022 at 8:13 PM	Bid Invite	Invitation to Bid
	Mar 1, 2022 at 3:29 PM	Internal Note	3/1 3:29 - Left voicemail for Frank
	Mar 4, 2022 at 9:41 AM	Message	Chandler RWIF- Addenda 1
	Mar 4, 2022 at 10:21 AM	Message	Chandler RWIF- Addenda 1 REV 1
	Mar 16, 2022 at 9:53 AM	Message	Questions
	Mar 16, 2022 at 3:14 PM	Internal Note	left message for Frank - His proposal does not meet structural concrete specs. Will email him as well
	Mar 17, 2022 at 11:47 AM	Internal Note	Frank sent me a revised bid but it is still not correct mixes - reached out again for update
	Mar 25, 2022 at 9:49 AM	Message	Addendum 2
CalPortland	Feb 28, 2022 at 8:13 PM	Bid Invite	Invitation to Bid
	Mar 1, 2022 at 3:32 PM	Internal Note	3/1 3:31 - Left voicemail for Joe N 602-809-3964
	Mar 2, 2022 at 1:57 PM	Internal Note	3/2 1:57 - Joe will be submitting pricing
	Mar 4, 2022 at 9:41 AM	Message	Chandler RWIF- Addenda 1
	Mar 4, 2022 at 10:21 AM	Message	Chandler RWIF- Addenda 1 REV 1
	Mar 15, 2022 at 11:31 AM	Internal Note	requested proposal per email and sent quantities/specs/gsn/current schedule
	Mar 16, 2022 at 9:53 AM	Message	Questions
	Mar 16, 2022 at 3:14 PM	Internal Note	Joe said he can bid without air entrapment ; called him back to discuss (no answer left VM)
	Mar 16, 2022 at 6:01 PM	Internal Note	Talked with Joe - he said can not bid with air spec - he is concerned with mix failing due to fly ash irregularities and too many variables. He will bid if we do not need air.
	Mar 25, 2022 at 9:49 AM	Message	Addendum 2
CEMEX	Feb 28, 2022 at 8:13 PM	Bid Invite	Invitation to Bid
	Mar 1, 2022 at 3:34 PM	Internal Note	3/1 3:33 - Left voicemail for Jennifer
	Mar 4, 2022 at 9:41 AM	Message	Chandler RWIF- Addenda 1
	Mar 4, 2022 at 10:21 AM	Message	Chandler RWIF- Addenda 1 REV 1
	Mar 15, 2022 at 11:02 AM	Internal Note	sent Jennifer follow up email seeing if bidding and provided the GSN/specs/ concrete quantities
	Mar 16, 2022 at 9:53 AM	Message	Questions
	Mar 16, 2022 at 3:16 PM	Internal Note	Jennifer called and said not bidding with air spec - i left her a VM to discuss further
	Mar 25, 2022 at 9:49 AM	Message	Addendum 2
Hanson Aggregates	Feb 28, 2022 at 8:13 PM	Bid Invite	Invitation to Bid
	Mar 1, 2022 at 3:40 PM	Internal Note	Duplicate with Martin Marietta
	Mar 4, 2022 at 9:41 AM	Message	Chandler RWIF- Addenda 1
	Mar 4, 2022 at 10:21 AM	Message	Chandler RWIF- Addenda 1 REV 1
Lehigh Hanson	Feb 28, 2022 at 8:13 PM	Bid Invite	Invitation to Bid
	Mar 1, 2022 at 3:35 PM	Bid Invite	Invitation to Bid
	Mar 1, 2022 at 3:40 PM	Internal Note	Duplicate with Martin Marietta
	Mar 4, 2022 at 9:41 AM	Message	Chandler RWIF- Addenda 1
	Mar 4, 2022 at 10:21 AM	Message	Chandler RWIF- Addenda 1 REV 1
	Mar 16, 2022 at 9:53 AM	Message	Questions
	Mar 25, 2022 at 9:49 AM	Message	Addendum 2
Martin Marietta	Mar 1, 2022 at 3:35 PM	Bid Invite	Invitation to Bid

McCarthy Subcontractor Outreach

Chandler Reclaimed Water Interconnect Facility

Company/ Description	Timestamp	Type	Subject
	Mar 1, 2022 at 3:39 PM	Internal Note	3/1 3:39 - Talked with Brian, will put quote together by end of week
	Mar 4, 2022 at 9:41 AM	Message	Chandler RWIF- Addenda 1
	Mar 4, 2022 at 10:21 AM	Message	Chandler RWIF- Addenda 1 REV 1
	Mar 7, 2022 at 7:57 AM	Message	Ready Mix Quantities
	Mar 15, 2022 at 10:59 AM	Internal Note	Sent Brian follow up email with specs/gsn and concrete total. Will call today to get timeline for his submittal.
	Mar 16, 2022 at 9:53 AM	Message	Questions
	Mar 16, 2022 at 6:01 PM	Internal Note	Received Bid tonight from Brian
	Mar 17, 2022 at 11:46 AM	Internal Note	talked with Brian - he is updating bid will send today
	Mar 25, 2022 at 9:49 AM	Message	Addendum 2
03B - Concrete Reinforcing			
CMC Steel Fabricators, Inc. dba CMC Rebar	Feb 28, 2022 at 8:13 PM	Bid Invite	Invitation to Bid
	Mar 2, 2022 at 2:05 PM	Bid Invite	Resent Invitation to Bid
	Mar 4, 2022 at 9:41 AM	Message	Chandler RWIF- Addenda 1
	Mar 4, 2022 at 10:21 AM	Message	Chandler RWIF- Addenda 1 REV 1
	Mar 11, 2022 at 2:00 PM	Internal Note	sent email seeing if still interested in bidding and sent CD's
	Mar 15, 2022 at 2:40 PM	Internal Note	called Philippe, Kailey, and Alex....no answer left VM...
	Mar 16, 2022 at 9:53 AM	Message	Questions
	Mar 22, 2022 at 12:40 PM	Internal Note	3/22 1:40 - Left voicemail for Kailey. Sent email to Kailey and Alex
	Mar 25, 2022 at 9:49 AM	Message	Addendum 2
Endo Steel, Inc.	Feb 28, 2022 at 8:13 PM	Bid Invite	Invitation to Bid
	Mar 4, 2022 at 9:41 AM	Message	Chandler RWIF- Addenda 1
	Mar 4, 2022 at 10:21 AM	Message	Chandler RWIF- Addenda 1 REV 1
	Mar 11, 2022 at 2:32 PM	Internal Note	Gary did not answer, emailed him with project info and ask if he is bidding
	Mar 16, 2022 at 9:53 AM	Message	Questions
	Mar 25, 2022 at 9:49 AM	Message	Addendum 2
Harris Rebar	Feb 28, 2022 at 8:13 PM	Bid Invite	Invitation to Bid
	Mar 2, 2022 at 2:00 PM	Internal Note	3/2 1:59 - Left voicemail for Chad
	Mar 4, 2022 at 9:41 AM	Message	Chandler RWIF- Addenda 1
	Mar 4, 2022 at 10:21 AM	Message	Chandler RWIF- Addenda 1 REV 1
	Mar 11, 2022 at 1:50 PM	Internal Note	left VM for Chad - sent email with CD's and asked if interested in bidding job
	Mar 11, 2022 at 3:06 PM	Internal Note	chad responded by email is not bidding
Paradise Rebar, Inc.	Feb 28, 2022 at 8:13 PM	Bid Invite	Invitation to Bid
	Mar 4, 2022 at 9:41 AM	Message	Chandler RWIF- Addenda 1
	Mar 4, 2022 at 10:21 AM	Message	Chandler RWIF- Addenda 1 REV 1
	Mar 11, 2022 at 2:37 PM	Internal Note	reached out to phil and sent CD's through email. Will call Monday.
	Mar 15, 2022 at 2:33 PM	Internal Note	Spoke with Phil he said they are too busy and are not bidding
Suncoast Post-Tension	Feb 28, 2022 at 8:13 PM	Bid Invite	Invitation to Bid
	Mar 2, 2022 at 2:02 PM	Internal Note	3/2 2:02 - Talked with John, project is assigned to an estimator and on their bid schedule. Will be quoting
	Mar 4, 2022 at 9:41 AM	Message	Chandler RWIF- Addenda 1
	Mar 4, 2022 at 10:21 AM	Message	Chandler RWIF- Addenda 1 REV 1
	Mar 16, 2022 at 9:53 AM	Message	Questions
	Mar 21, 2022 at 4:46 PM	Internal Note	tried calling john, will call again tomm morning. Sent out by email scope sheet and bid/bond forms. I asked if they will still submit a bid.
	Mar 25, 2022 at 9:49 AM	Message	Addendum 2
	Mar 25, 2022 at 10:14 AM	Internal Note	emailed John - checked in to see if still submitting bid today
Tyler Reinforcing, LLC	Feb 28, 2022 at 8:13 PM	Bid Invite	Invitation to Bid
	Mar 1, 2022 at 3:47 PM	Internal Note	3/1 3:47 - Talked with Joel, will be reviewing documents in the next couple days and will follow up with any questions
	Mar 4, 2022 at 9:41 AM	Message	Chandler RWIF- Addenda 1
	Mar 4, 2022 at 10:21 AM	Message	Chandler RWIF- Addenda 1 REV 1
	Mar 11, 2022 at 3:10 PM	Internal Note	sent Joel email asking him if have any questions on scope of work, left VM

McCarthy Subcontractor Outreach

Chandler Reclaimed Water Interconnect Facility

Company/ Description	Timestamp	Type	Subject
	Mar 15, 2022 at 2:48 PM	Internal Note	Checked in with Joel he is definitely bidding - i need to send him scope sheet by Thursday
	Mar 16, 2022 at 9:53 AM	Message	Questions
	Mar 21, 2022 at 4:21 PM	Internal Note	Sent Joel Scope sheet and Bid form/Bond Form - says will return by Thursday
	Mar 24, 2022 at 3:53 PM	Internal Note	received Proposal from Joel
	Mar 25, 2022 at 9:49 AM	Message	Addendum 2
04A - Masonry			
Alta Vista Masonry	Feb 28, 2022 at 8:14 PM	Bid Invite	Invitation to Bid
	Mar 2, 2022 at 2:07 PM	Internal Note	3/2 2:07 - Left voicemail for Phil
	Mar 4, 2022 at 9:41 AM	Message	Chandler RWIF- Addenda 1
	Mar 4, 2022 at 10:21 AM	Message	Chandler RWIF- Addenda 1 REV 1
	Mar 10, 2022 at 2:08 PM	Internal Note	left voicemail for Raymonds (PM). Looked up main office number and left a VM as well
	Mar 10, 2022 at 2:29 PM	Internal Note	raymond called me back - he wants to bid - told me to reach out to lasaro (estimator) and send prequal info to Melissa.
	Mar 11, 2022 at 1:21 PM	Internal Note	sent link to contract documents and preq info to fill out
	Mar 16, 2022 at 9:53 AM	Message	Questions
	Mar 22, 2022 at 12:32 PM	Internal Note	3/22 1:32 - Left voicemail for Lasaro
	Mar 23, 2022 at 12:36 PM	Internal Note	3/22 - emailed asking on prequal status and if needed help completing - currently in draft
	Mar 23, 2022 at 12:37 PM	Internal Note	emailed Laz and entire team the scope sheet and bidform.
	Mar 23, 2022 at 2:42 PM	Internal Note	3/23 - Left voicemail for Laz. Called Raymond to check on status, was going to talk with Laz and get back to me
	Mar 25, 2022 at 9:49 AM	Message	Addendum 2
Avila Masonry LLC	Feb 28, 2022 at 8:14 PM	Bid Invite	Invitation to Bid
	Mar 2, 2022 at 2:10 PM	Bid Invite	Resent Invitation to Bid
	Mar 2, 2022 at 2:11 PM	Internal Note	3/2 2:10 - Talked with Antonio, will look at plans. Re-send invite
	Mar 4, 2022 at 9:41 AM	Message	Chandler RWIF- Addenda 1
	Mar 4, 2022 at 10:21 AM	Message	Chandler RWIF- Addenda 1 REV 1
	Mar 10, 2022 at 2:01 PM	Internal Note	Emailed Antonio seeing if still interested in bidding. Will follow up with a call tomm.
	Mar 11, 2022 at 1:30 PM	Internal Note	sent Antonio contract drawings - still no response
	Mar 16, 2022 at 9:53 AM	Message	Questions
	Mar 23, 2022 at 2:40 PM	Internal Note	3/23 - Tried to get ahold of Antonio, left voicemail
	Mar 25, 2022 at 9:49 AM	Message	Addendum 2
Denny Clark Masonry & Concrete	Feb 28, 2022 at 8:14 PM	Bid Invite	Invitation to Bid
G. V. Masonry Inc.	Feb 28, 2022 at 8:14 PM	Bid Invite	Invitation to Bid
	Mar 2, 2022 at 2:13 PM	Bid Invite	Resent Invitation to Bid
	Mar 4, 2022 at 9:41 AM	Message	Chandler RWIF- Addenda 1
	Mar 4, 2022 at 10:21 AM	Message	Chandler RWIF- Addenda 1 REV 1
	Mar 10, 2022 at 1:50 PM	Internal Note	Emailed Gary to follow up on if interested in bidding the job.
	Mar 11, 2022 at 1:22 PM	Internal Note	Gary emailed back saying he would reach out if had questions, I sent him a link to access the drawings
	Mar 16, 2022 at 9:53 AM	Message	Questions
	Mar 23, 2022 at 2:38 PM	Internal Note	Spoke with Gary, declined to bid
Stone Cold Masonry	Feb 28, 2022 at 8:14 PM	Bid Invite	Invitation to Bid
Straight Arrow Contracting	Feb 28, 2022 at 8:14 PM	Bid Invite	Invitation to Bid
	Mar 4, 2022 at 9:41 AM	Message	Chandler RWIF- Addenda 1
	Mar 4, 2022 at 10:21 AM	Message	Chandler RWIF- Addenda 1 REV 1
	Mar 10, 2022 at 1:35 PM	Internal Note	left voicemail on main office phone. Will email contacts to see if interested in bidding
	Mar 10, 2022 at 1:43 PM	Internal Note	emailed their office team to see if interested in bidding job
	Mar 11, 2022 at 1:36 PM	Internal Note	emailed contract documents - no response from sub
	Mar 11, 2022 at 3:45 PM	Internal Note	Brian lewis emailed me saying he will be the lead estimator for the project. He will take a look at project and let me know if bidding. I will follow up next week
	Mar 16, 2022 at 9:53 AM	Message	Questions

McCarthy Subcontractor Outreach

Chandler Reclaimed Water Interconnect Facility

Company/ Description	Timestamp	Type	Subject
	Mar 16, 2022 at 4:06 PM	Internal Note	resent bid invite to Brian Lewis...told him I will be the contact for masonry scope of work. He is looking at it tonight and will reach out tomm if bidding.
	Mar 22, 2022 at 10:49 AM	Internal Note	sent email to Brian with prequalification steps. he is not in our system.
	Mar 22, 2022 at 12:34 PM	Internal Note	3/22 1:34 - Left voicemail for Brian
	Mar 23, 2022 at 12:37 PM	Internal Note	emailed brian scope sheet and bidform - waiting for response to see if bidding
	Mar 23, 2022 at 2:40 PM	Internal Note	Received email from Brian declining to bid
	Mar 25, 2022 at 9:49 AM	Message	Addendum 2
	Mar 25, 2022 at 10:07 AM	Internal Note	Brian decided to Bid and submitted forms today . Need to scope out still
Sun Valley Masonry	Feb 28, 2022 at 8:14 PM	Bid Invite	Invitation to Bid
	Mar 4, 2022 at 9:41 AM	Message	Chandler RWIF- Addenda 1
	Mar 4, 2022 at 10:21 AM	Message	Chandler RWIF- Addenda 1 REV 1
	Mar 10, 2022 at 1:28 PM	Internal Note	Talked to John Bailey who said to call Todd Nessler to see if they will bid the project. I left Todd a VM and emailed him.
	Mar 15, 2022 at 11:11 AM	Internal Note	Left Todd a voicemail seeing if they will bid the masonry scope- will follow up with another email
	Mar 16, 2022 at 9:53 AM	Message	Questions
	Mar 22, 2022 at 3:50 PM	Internal Note	Sent another email trying to see if they would bid this job. Todd responded and declined
	Mar 23, 2022 at 5:11 PM	Bid Invite	Resent Invitation to Bid
	Mar 25, 2022 at 9:49 AM	Message	Addendum 2
Superior Masonry Inc.	Feb 28, 2022 at 8:14 PM	Bid Invite	Invitation to Bid
05A - Structural Steel			
Able Steel Fabricators, Inc.	Mar 1, 2022 at 8:30 AM	Bid Invite	Invitation to Bid
	Mar 4, 2022 at 9:41 AM	Message	Chandler RWIF- Addenda 1
	Mar 4, 2022 at 10:21 AM	Message	Chandler RWIF- Addenda 1 REV 1
	Mar 7, 2022 at 2:42 PM	Internal Note	Called and left a message for Mason to see if Able is planning on bidding or not.
	Mar 14, 2022 at 8:54 AM	Internal Note	I talked to Roy about the delineation between structural and misc metals. He said he could put together a misc metal bid but needs more details.
	Mar 16, 2022 at 9:53 AM	Message	Questions
	Mar 17, 2022 at 11:33 AM	Message	Differential Between 05A - Structural Steel and 05B - Misc. Metals
	Mar 25, 2022 at 9:49 AM	Message	Addendum 2
Grating Pacific Inc.	Mar 1, 2022 at 8:30 AM	Bid Invite	Invitation to Bid
Gray Wolf Integrated Construction Company	Mar 1, 2022 at 8:30 AM	Bid Invite	Invitation to Bid
	Mar 4, 2022 at 9:41 AM	Message	Chandler RWIF- Addenda 1
	Mar 4, 2022 at 10:21 AM	Message	Chandler RWIF- Addenda 1 REV 1
	Mar 7, 2022 at 2:45 PM	Internal Note	Called and left Cameron a voicemail to see if Gray Wolf was planning on bidding the structural steel.
	Mar 14, 2022 at 2:28 PM	Internal Note	3/14 @2:28pm- Spoke with David Butler area break outs.
	Mar 16, 2022 at 9:53 AM	Message	Questions
	Mar 17, 2022 at 11:33 AM	Message	Differential Between 05A - Structural Steel and 05B - Misc. Metals
	Mar 25, 2022 at 9:49 AM	Message	Addendum 2
OLT Fabrication	Mar 1, 2022 at 8:30 AM	Bid Invite	Invitation to Bid
	Mar 4, 2022 at 9:41 AM	Message	Chandler RWIF- Addenda 1
	Mar 4, 2022 at 10:21 AM	Message	Chandler RWIF- Addenda 1 REV 1
	Mar 7, 2022 at 2:47 PM	Internal Note	Called and left Terry a message to see if OLT was planning on bidding the project.
	Mar 16, 2022 at 9:53 AM	Message	Questions
	Mar 17, 2022 at 11:29 AM	Message	Misc. Metals Scope Delineation
	Mar 17, 2022 at 11:33 AM	Message	Differential Between 05A - Structural Steel and 05B - Misc. Metals
	Mar 25, 2022 at 9:49 AM	Message	Addendum 2
Revolution Industrial	Mar 1, 2022 at 8:30 AM	Bid Invite	Invitation to Bid
	Mar 4, 2022 at 9:41 AM	Message	Chandler RWIF- Addenda 1
	Mar 4, 2022 at 10:21 AM	Message	Chandler RWIF- Addenda 1 REV 1

McCarthy Subcontractor Outreach

Chandler Reclaimed Water Interconnect Facility

Company/ Description	Timestamp	Type	Subject
	Mar 10, 2022 at 7:31 AM	Message	Questions and Answers
	Mar 14, 2022 at 9:47 AM	Internal Note	Talked with Issac about concrete connecting for structural steel. Will need to follow up with additional information and details.
	Mar 16, 2022 at 9:53 AM	Message	Questions
	Mar 16, 2022 at 12:52 PM	Message	Scope Sheet and More
	Mar 17, 2022 at 6:03 AM	Message	Piping LF and Sizes
	Mar 17, 2022 at 11:29 AM	Message	Misc. Metals Scope Delineation
	Mar 17, 2022 at 11:33 AM	Message	Differential Between 05A - Structural Steel and 05B - Misc. Metals
	Mar 25, 2022 at 9:49 AM	Message	Addendum 2
Schuff Steel Company	Mar 1, 2022 at 8:30 AM	Bid Invite	Invitation to Bid
W & W Structural, Inc.	Mar 1, 2022 at 8:30 AM	Bid Invite	Invitation to Bid
	Mar 4, 2022 at 9:41 AM	Message	Chandler RWIF- Addenda 1
	Mar 4, 2022 at 10:21 AM	Message	Chandler RWIF- Addenda 1 REV 1
	Mar 7, 2022 at 2:51 PM	Internal Note	Talked with Colton and he is going to review the documents and let me know if they are planning on bidding. He said that this type of work is what they are good at it so I believe they will provide a bid.
	Mar 16, 2022 at 9:53 AM	Message	Questions
	Mar 17, 2022 at 11:33 AM	Message	Differential Between 05A - Structural Steel and 05B - Misc. Metals
	Mar 25, 2022 at 9:49 AM	Message	Addendum 2
05B - Misc. Metals			
Anderson Steel Supply, Inc.	Mar 1, 2022 at 8:32 AM	Bid Invite	Invitation to Bid
	Mar 4, 2022 at 9:41 AM	Message	Chandler RWIF- Addenda 1
	Mar 4, 2022 at 10:21 AM	Message	Chandler RWIF- Addenda 1 REV 1
	Mar 7, 2022 at 3:00 PM	Internal Note	Talked with Joe and they are planning on bidding the project. He said he will let me know of if he has any questions. They may be bidding the structural steel package as well.
	Mar 9, 2022 at 1:15 PM	Bid Invite	Invitation to Bid
Blue Dot Steel & Supply, Inc.	Mar 1, 2022 at 8:32 AM	Bid Invite	Invitation to Bid
	Mar 4, 2022 at 9:41 AM	Message	Chandler RWIF- Addenda 1
	Mar 4, 2022 at 10:21 AM	Message	Chandler RWIF- Addenda 1 REV 1
	Mar 7, 2022 at 3:04 PM	Internal Note	I spoke with Charlie and he is going to talk with Erin to confirm if they are bidding. He says their schedule is booked throughout the rest of the year and will have to verify before committing. They will let me know either way they decide.
	Mar 16, 2022 at 9:53 AM	Message	Questions
	Mar 17, 2022 at 11:29 AM	Message	Misc. Metals Scope Delineation
	Mar 25, 2022 at 9:49 AM	Message	Addendum 2
Caliente Ironworks	Mar 1, 2022 at 8:32 AM	Bid Invite	Invitation to Bid
	Mar 4, 2022 at 9:41 AM	Message	Chandler RWIF- Addenda 1
	Mar 4, 2022 at 10:21 AM	Message	Chandler RWIF- Addenda 1 REV 1
	Mar 7, 2022 at 3:06 PM	Internal Note	I talked with Mark and he told me that they are too busy right now to bid this project but will be interested in future projects.
Diversified Metal Fabrication	Mar 1, 2022 at 8:32 AM	Bid Invite	Invitation to Bid
	Mar 4, 2022 at 9:41 AM	Message	Chandler RWIF- Addenda 1
	Mar 4, 2022 at 10:21 AM	Message	Chandler RWIF- Addenda 1 REV 1
	Mar 7, 2022 at 2:54 PM	Internal Note	Called and left Carrie a voicemail to see if they are planning on bidding the misc. metals.
	Mar 16, 2022 at 9:53 AM	Message	Questions
	Mar 17, 2022 at 11:29 AM	Message	Misc. Metals Scope Delineation
OLT Fabrication	Mar 1, 2022 at 8:32 AM	Bid Invite	Invitation to Bid
	Mar 4, 2022 at 9:41 AM	Message	Chandler RWIF- Addenda 1
	Mar 4, 2022 at 10:21 AM	Message	Chandler RWIF- Addenda 1 REV 1
	Mar 16, 2022 at 9:53 AM	Message	Questions
	Mar 17, 2022 at 11:29 AM	Message	Misc. Metals Scope Delineation
	Mar 17, 2022 at 11:33 AM	Message	Differential Between 05A - Structural Steel and 05B - Misc. Metals

McCarthy Subcontractor Outreach

Chandler Reclaimed Water Interconnect Facility

Company/ Description	Timestamp	Type	Subject
	Mar 25, 2022 at 9:49 AM	Message	Addendum 2
Revolution Industrial	Mar 1, 2022 at 8:32 AM	Bid Invite	Invitation to Bid
	Mar 1, 2022 at 9:05 AM	Internal Note	Just received an email from Issac asking if they can propose on misc metals and structural steel on the same proposal. I said yes as long as they show a break out of each work category on their bid.
	Mar 4, 2022 at 9:41 AM	Message	Chandler RWIF- Addenda 1
	Mar 4, 2022 at 10:21 AM	Message	Chandler RWIF- Addenda 1 REV 1
	Mar 10, 2022 at 7:31 AM	Message	Questions and Answers
	Mar 16, 2022 at 9:53 AM	Message	Questions
	Mar 16, 2022 at 12:52 PM	Message	Scope Sheet and More
	Mar 17, 2022 at 6:03 AM	Message	Piping LF and Sizes
	Mar 17, 2022 at 11:29 AM	Message	Misc. Metals Scope Delineation
	Mar 17, 2022 at 11:33 AM	Message	Differential Between 05A - Structural Steel and 05B - Misc. Metals
	Mar 25, 2022 at 9:49 AM	Message	Addendum 2
SH Engineering	Mar 1, 2022 at 8:32 AM	Bid Invite	Invitation to Bid
	Mar 4, 2022 at 9:41 AM	Message	Chandler RWIF- Addenda 1
	Mar 4, 2022 at 10:21 AM	Message	Chandler RWIF- Addenda 1 REV 1
	Mar 7, 2022 at 2:56 PM	Internal Note	Talked with Andy and he told me that Bob was running with this project. He said that they are planning on bidding.
	Mar 16, 2022 at 9:53 AM	Message	Questions
	Mar 17, 2022 at 11:29 AM	Message	Misc. Metals Scope Delineation
	Mar 25, 2022 at 9:49 AM	Message	Addendum 2
05C - Cantilevered Sliding Gate			
Automatic Gate Systems, Inc.	Mar 1, 2022 at 8:34 AM	Bid Invite	Invitation to Bid
	Mar 4, 2022 at 9:41 AM	Message	Chandler RWIF- Addenda 1
	Mar 4, 2022 at 10:21 AM	Message	Chandler RWIF- Addenda 1 REV 1
	Mar 7, 2022 at 3:15 PM	Internal Note	Called and left a message for Sherly to introduce myself and see if they have any questions as they prepare a bid.
	Mar 7, 2022 at 4:23 PM	Internal Note	Talked with Sheryl and she is bidding and needed direction on where to find the gate elevation and spec for automation.
	Mar 16, 2022 at 9:53 AM	Message	Questions
	Mar 25, 2022 at 9:49 AM	Message	Addendum 2
Az Automated Gates	Mar 1, 2022 at 8:34 AM	Bid Invite	Invitation to Bid
	Mar 4, 2022 at 9:41 AM	Message	Chandler RWIF- Addenda 1
	Mar 4, 2022 at 10:21 AM	Message	Chandler RWIF- Addenda 1 REV 1
	Mar 7, 2022 at 3:16 PM	Internal Note	I tried calling Peter but it appears that this phone number listed is no longer in service. Will try emailing him.
	Mar 16, 2022 at 9:53 AM	Message	Questions
	Mar 25, 2022 at 9:49 AM	Message	Addendum 2
Biddle & Brown Fence Company, LLC	Mar 1, 2022 at 8:34 AM	Bid Invite	Invitation to Bid
	Mar 4, 2022 at 9:41 AM	Message	Chandler RWIF- Addenda 1
	Mar 4, 2022 at 10:21 AM	Message	Chandler RWIF- Addenda 1 REV 1
	Mar 7, 2022 at 3:18 PM	Internal Note	I called Courtney and he said that he is bidding.
	Mar 16, 2022 at 9:53 AM	Message	Questions
	Mar 25, 2022 at 9:49 AM	Message	Addendum 2
Five G Inc.	Mar 1, 2022 at 8:34 AM	Bid Invite	Invitation to Bid
	Mar 4, 2022 at 9:41 AM	Message	Chandler RWIF- Addenda 1
	Mar 4, 2022 at 10:21 AM	Message	Chandler RWIF- Addenda 1 REV 1
	Mar 7, 2022 at 3:20 PM	Internal Note	Called and left Greg a voicemail to see if Five G was planning on bidding the project.
	Mar 16, 2022 at 9:53 AM	Message	Questions
	Mar 25, 2022 at 9:49 AM	Message	Addendum 2
Hurricane Fence Co	Mar 1, 2022 at 8:34 AM	Bid Invite	Invitation to Bid
	Mar 4, 2022 at 9:41 AM	Message	Chandler RWIF- Addenda 1
	Mar 4, 2022 at 10:21 AM	Message	Chandler RWIF- Addenda 1 REV 1
	Mar 7, 2022 at 3:22 PM	Bid Invite	Invitation to Bid

McCarthy Subcontractor Outreach

Chandler Reclaimed Water Interconnect Facility

Company/ Description	Timestamp	Type	Subject
	Mar 7, 2022 at 3:23 PM	Internal Note	I talked with Kirby and he is going to review the plans and specs and let me know if they are planning on bidding it.
	Mar 16, 2022 at 9:53 AM	Message	Questions
	Mar 25, 2022 at 9:49 AM	Message	Addendum 2
Parker & Sons Steel Erecting, Inc.	Mar 1, 2022 at 8:34 AM	Bid Invite	Invitation to Bid
	Mar 4, 2022 at 9:41 AM	Message	Chandler RWIF- Addenda 1
	Mar 4, 2022 at 10:21 AM	Message	Chandler RWIF- Addenda 1 REV 1
	Mar 7, 2022 at 3:25 PM	Internal Note	I called Jim and left a voicemail to confirm if they were bidding or not bidding.
	Mar 16, 2022 at 9:53 AM	Message	Questions
	Mar 25, 2022 at 9:49 AM	Message	Addendum 2
Phoenix Fence Company	Mar 1, 2022 at 8:34 AM	Bid Invite	Invitation to Bid
Susies Custom Fence	Mar 1, 2022 at 8:34 AM	Bid Invite	Invitation to Bid
	Mar 4, 2022 at 9:41 AM	Message	Chandler RWIF- Addenda 1
	Mar 4, 2022 at 10:21 AM	Message	Chandler RWIF- Addenda 1 REV 1
	Mar 7, 2022 at 3:27 PM	Internal Note	I called and talked to Lance and he told me they are too busy to bid this project.
	Mar 16, 2022 at 9:53 AM	Message	Questions
	Mar 25, 2022 at 9:49 AM	Message	Addendum 2
Western Fence	Mar 1, 2022 at 8:34 AM	Bid Invite	Invitation to Bid
	Mar 4, 2022 at 9:41 AM	Message	Chandler RWIF- Addenda 1
	Mar 4, 2022 at 10:21 AM	Message	Chandler RWIF- Addenda 1 REV 1
	Mar 7, 2022 at 3:32 PM	Internal Note	I called and left Marcus a voicemail to see if Western Fence was planning on bidding this project.
	Mar 16, 2022 at 9:53 AM	Message	Questions
	Mar 25, 2022 at 9:49 AM	Message	Addendum 2
06A - Fiberglass Fabrications			
Brown-Campbell Co.	Mar 22, 2022 at 10:43 AM	Bid Invite	Invitation to Bid
	Mar 22, 2022 at 12:46 PM	Internal Note	I talked with Doug and they are going to bid the FRP package for the job.
	Mar 25, 2022 at 9:49 AM	Message	Addendum 2
Fiberglass Fabricators, Inc.	Mar 1, 2022 at 8:35 AM	Bid Invite	Invitation to Bid
	Mar 4, 2022 at 9:41 AM	Message	Chandler RWIF- Addenda 1
	Mar 4, 2022 at 10:21 AM	Message	Chandler RWIF- Addenda 1 REV 1
	Mar 7, 2022 at 3:34 PM	Internal Note	I called and left Anthony a voicemail to see if he was planning on bidding the project.
	Mar 16, 2022 at 9:53 AM	Message	Questions
	Mar 17, 2022 at 11:48 AM	Message	FRP Scope Delineation
Fibergrate Composite Structures	Mar 1, 2022 at 8:35 AM	Bid Invite	Invitation to Bid
	Mar 2, 2022 at 4:20 PM	Message	Fibergrate FRP
	Mar 4, 2022 at 9:41 AM	Message	Chandler RWIF- Addenda 1
	Mar 4, 2022 at 10:21 AM	Message	Chandler RWIF- Addenda 1 REV 1
	Mar 7, 2022 at 3:35 PM	Internal Note	Emailed Scott about the job and where a bulk of his scope will be located.
	Mar 7, 2022 at 3:36 PM	Internal Note	Called and left Scott a voicemail. I wanted to introduce myself and give him a little more detail about the job.
	Mar 15, 2022 at 8:25 AM	Internal Note	3/9 Emailed Scott the exact pages he needed. On 3/11 received a bid from him.
	Mar 16, 2022 at 9:53 AM	Message	Questions
	Mar 17, 2022 at 11:48 AM	Message	FRP Scope Delineation
	Mar 25, 2022 at 9:49 AM	Message	Addendum 2
Geo Supply Inc.	Mar 1, 2022 at 8:35 AM	Bid Invite	Invitation to Bid
	Mar 4, 2022 at 9:41 AM	Message	Chandler RWIF- Addenda 1
	Mar 4, 2022 at 10:21 AM	Message	Chandler RWIF- Addenda 1 REV 1
	Mar 7, 2022 at 3:39 PM	Internal Note	Called and Left Pamela a voicemail. Will have to send over an email as well.
	Mar 16, 2022 at 9:53 AM	Message	Questions
	Mar 17, 2022 at 11:48 AM	Message	FRP Scope Delineation
	Mar 25, 2022 at 9:49 AM	Message	Addendum 2
Grating Pacific Inc.	Mar 1, 2022 at 8:35 AM	Bid Invite	Invitation to Bid

McCarthy Subcontractor Outreach

Chandler Reclaimed Water Interconnect Facility

Company/ Description	Timestamp	Type	Subject
	Mar 4, 2022 at 9:41 AM	Message	Chandler RWIF- Addenda 1
	Mar 4, 2022 at 10:21 AM	Message	Chandler RWIF- Addenda 1 REV 1
	Mar 7, 2022 at 3:42 PM	Internal Note	Talked with Allen and he said that they won't be bidding because their manufacturer "Fibergrate" is bidding the job and it would be redundant for them to bid.
Grating Systems, Inc.	Mar 1, 2022 at 8:35 AM	Bid Invite	Invitation to Bid
National Grating	Mar 17, 2022 at 11:52 AM	Bid Invite	Invitation to Bid
	Mar 22, 2022 at 12:47 PM	Internal Note	I sent Jake over the scope of work package on 3/17 and they are going to be bidding.
	Mar 25, 2022 at 9:49 AM	Message	Addendum 2
Strongwell Corporation	Mar 1, 2022 at 8:35 AM	Bid Invite	Invitation to Bid
	Mar 4, 2022 at 9:41 AM	Message	Chandler RWIF- Addenda 1
	Mar 4, 2022 at 10:21 AM	Message	Chandler RWIF- Addenda 1 REV 1
	Mar 7, 2022 at 3:44 PM	Internal Note	I tried calling multiple times and each time it appeared that the line was disconnected. I will try sending Andy an email to see if I can connect with him.
	Mar 16, 2022 at 9:53 AM	Message	Questions
	Mar 17, 2022 at 11:48 AM	Message	FRP Scope Delineation
	Mar 25, 2022 at 9:49 AM	Message	Addendum 2
08A - Metal Doors, Frames, & Hardware			
American Direct	Mar 1, 2022 at 8:36 AM	Bid Invite	Invitation to Bid
	Mar 4, 2022 at 9:41 AM	Message	Chandler RWIF- Addenda 1
	Mar 4, 2022 at 10:21 AM	Message	Chandler RWIF- Addenda 1 REV 1
	Mar 15, 2022 at 8:53 AM	Internal Note	3/15/2022 - Called and left a message for Andrea @8:53 am
	Mar 16, 2022 at 9:53 AM	Message	Questions
	Mar 25, 2022 at 9:49 AM	Message	Addendum 2
	Mar 30, 2022 at 10:29 AM	Internal Note	3/30/2022 - Called and spoke with estimator on pricing for additional hold times for pricing. @10:28 am Jcampos
D8 Commercial Doors	Mar 1, 2022 at 8:36 AM	Bid Invite	Invitation to Bid
	Mar 4, 2022 at 9:41 AM	Message	Chandler RWIF- Addenda 1
	Mar 4, 2022 at 10:21 AM	Message	Chandler RWIF- Addenda 1 REV 1
	Mar 14, 2022 at 8:34 AM	Message	Additional Doors
	Mar 16, 2022 at 8:43 AM	Internal Note	3/16/2022 - Spoke to Ben on the phone and they are going to look over the package. @8:42 am - Jcampos
	Mar 16, 2022 at 9:53 AM	Message	Questions
	Mar 25, 2022 at 9:49 AM	Message	Addendum 2
DH Pace Company, Inc.	Mar 1, 2022 at 8:36 AM	Bid Invite	Invitation to Bid
	Mar 4, 2022 at 9:41 AM	Message	Chandler RWIF- Addenda 1
	Mar 4, 2022 at 10:21 AM	Message	Chandler RWIF- Addenda 1 REV 1
	Mar 14, 2022 at 8:34 AM	Message	Additional Doors
	Mar 14, 2022 at 8:41 AM	Message	Reminder
	Mar 15, 2022 at 8:59 AM	Internal Note	3/15/2022 - Called and left a voicemail for Darrin @ 8:59 am - Jcampos
	Mar 16, 2022 at 9:53 AM	Message	Questions
	Mar 25, 2022 at 9:49 AM	Message	Addendum 2
Ind Corrosion Products	Mar 1, 2022 at 8:36 AM	Bid Invite	Invitation to Bid
	Mar 4, 2022 at 9:41 AM	Message	Chandler RWIF- Addenda 1
	Mar 4, 2022 at 10:21 AM	Message	Chandler RWIF- Addenda 1 REV 1
	Mar 14, 2022 at 8:34 AM	Message	Additional Doors
	Mar 15, 2022 at 9:01 AM	Internal Note	3/15/2022 - Called and left Bob a voicemail @9:01 am - Jcampos
	Mar 16, 2022 at 9:39 AM	Message	Reminder
	Mar 16, 2022 at 9:53 AM	Message	Questions
	Mar 25, 2022 at 9:49 AM	Message	Addendum 2
Isec, Incorporated	Mar 1, 2022 at 8:36 AM	Bid Invite	Invitation to Bid
Kelley Bros.	Mar 1, 2022 at 8:36 AM	Bid Invite	Invitation to Bid
	Mar 4, 2022 at 9:41 AM	Message	Chandler RWIF- Addenda 1
	Mar 4, 2022 at 10:21 AM	Message	Chandler RWIF- Addenda 1 REV 1
	Mar 14, 2022 at 8:34 AM	Message	Additional Doors

McCarthy Subcontractor Outreach

Chandler Reclaimed Water Interconnect Facility

Company/ Description	Timestamp	Type	Subject
	Mar 16, 2022 at 8:40 AM	Internal Note	3/16/2022 - Called but the number was disconnected. @8:40 am - Jcampos
	Mar 16, 2022 at 9:53 AM	Message	Questions
	Mar 25, 2022 at 9:49 AM	Message	Addendum 2
	Mar 30, 2022 at 10:22 AM	Internal Note	3/30/2022 - Left a voicemail for Dawn to get additional pricing for longer hold times for bid. 10:22 am , Jcampos
Ken Watson Corporation	Mar 1, 2022 at 8:36 AM	Bid Invite	Invitation to Bid
	Mar 4, 2022 at 9:41 AM	Message	Chandler RWIF- Addenda 1
	Mar 4, 2022 at 10:21 AM	Message	Chandler RWIF- Addenda 1 REV 1
	Mar 14, 2022 at 8:34 AM	Message	Additional Doors
	Mar 16, 2022 at 8:46 AM	Internal Note	3/16/2022 - Called and left a voicemail in general voicemail box. @8:45 am - Jcampos
	Mar 16, 2022 at 9:53 AM	Message	Questions
	Mar 25, 2022 at 9:49 AM	Message	Addendum 2
LaForce, LLC	Mar 1, 2022 at 8:36 AM	Bid Invite	Invitation to Bid
	Mar 4, 2022 at 9:41 AM	Message	Chandler RWIF- Addenda 1
	Mar 4, 2022 at 10:21 AM	Message	Chandler RWIF- Addenda 1 REV 1
	Mar 14, 2022 at 8:34 AM	Message	Additional Doors
	Mar 16, 2022 at 8:48 AM	Internal Note	3/16/2022 - Called and left a voicemail for Cathryn. @8:48 am - Jcampos
	Mar 16, 2022 at 9:53 AM	Message	Questions
	Mar 25, 2022 at 9:49 AM	Message	Addendum 2
Noding Doors, Inc.	Mar 1, 2022 at 8:36 AM	Bid Invite	Invitation to Bid
	Mar 4, 2022 at 9:41 AM	Message	Chandler RWIF- Addenda 1
	Mar 4, 2022 at 10:21 AM	Message	Chandler RWIF- Addenda 1 REV 1
	Mar 14, 2022 at 8:34 AM	Message	Additional Doors
	Mar 16, 2022 at 8:50 AM	Internal Note	3/16/2022 - Called and Left a voicemail. @8:50 am - Jcampos
	Mar 16, 2022 at 9:53 AM	Message	Questions
	Mar 25, 2022 at 9:49 AM	Message	Addendum 2
The Hallgren Co.	Mar 1, 2022 at 8:36 AM	Bid Invite	Invitation to Bid
	Mar 4, 2022 at 9:41 AM	Message	Chandler RWIF- Addenda 1
	Mar 4, 2022 at 10:21 AM	Message	Chandler RWIF- Addenda 1 REV 1
	Mar 14, 2022 at 8:34 AM	Message	Additional Doors
	Mar 16, 2022 at 9:53 AM	Message	Questions
	Mar 25, 2022 at 9:49 AM	Message	Addendum 2
Walters & Wolf Construction Specialties, Inc.	Mar 1, 2022 at 8:36 AM	Bid Invite	Invitation to Bid
	Mar 4, 2022 at 9:41 AM	Message	Chandler RWIF- Addenda 1
	Mar 4, 2022 at 10:21 AM	Message	Chandler RWIF- Addenda 1 REV 1
	Mar 15, 2022 at 8:56 AM	Internal Note	3/15/2022 - Called and spoke to bidder, they are going to look at the package. @8:56 am - Jcampos
	Mar 16, 2022 at 9:53 AM	Message	Questions
	Mar 25, 2022 at 9:49 AM	Message	Addendum 2
	Mar 30, 2022 at 10:34 AM	Internal Note	3-30-2022 - Spoke to Jeff, He is sending over hold times for the pricing submitted. @10:33 am Jcampos
08D - Overhead Coiling Doors			
Cookson Door Sales of Arizona	Mar 1, 2022 at 8:38 AM	Bid Invite	Invitation to Bid
	Mar 4, 2022 at 9:41 AM	Message	Chandler RWIF- Addenda 1
	Mar 4, 2022 at 10:21 AM	Message	Chandler RWIF- Addenda 1 REV 1
	Mar 14, 2022 at 8:41 AM	Message	Reminder
	Mar 16, 2022 at 8:56 AM	Internal Note	3/16/2022 - Sent an email to Cookson Doors @8:56am - Jcampos
	Mar 16, 2022 at 9:53 AM	Message	Questions
	Mar 25, 2022 at 9:49 AM	Message	Addendum 2
	Mar 30, 2022 at 10:45 AM	Internal Note	3/30/2022 - Spoke with Mark, He said that there is about a 30-60 day hold on the pricing. @10:45 am Jcampos
DH Pace Company, Inc.	Mar 1, 2022 at 8:38 AM	Bid Invite	Invitation to Bid
	Mar 4, 2022 at 9:41 AM	Message	Chandler RWIF- Addenda 1
	Mar 4, 2022 at 10:21 AM	Message	Chandler RWIF- Addenda 1 REV 1
	Mar 14, 2022 at 8:34 AM	Message	Additional Doors

McCarthy Subcontractor Outreach

Chandler Reclaimed Water Interconnect Facility

Company/ Description	Timestamp	Type	Subject
	Mar 14, 2022 at 8:41 AM	Message	Reminder
	Mar 16, 2022 at 9:53 AM	Message	Questions
	Mar 25, 2022 at 9:49 AM	Message	Addendum 2
Miner, Ltd.	Mar 1, 2022 at 8:38 AM	Bid Invite	Invitation to Bid
	Mar 4, 2022 at 9:41 AM	Message	Chandler RWIF- Addenda 1
	Mar 4, 2022 at 10:21 AM	Message	Chandler RWIF- Addenda 1 REV 1
	Mar 14, 2022 at 8:41 AM	Message	Reminder
	Mar 16, 2022 at 9:53 AM	Message	Questions
	Mar 25, 2022 at 9:49 AM	Message	Addendum 2
	Mar 30, 2022 at 10:38 AM	Internal Note	3/30/2022 - Called and left Kevin a voicemail about hold time on the pricing. @10:38 am Jcampos
Nationserve Garage Door	Mar 1, 2022 at 8:38 AM	Bid Invite	Invitation to Bid
	Mar 4, 2022 at 9:41 AM	Message	Chandler RWIF- Addenda 1
	Mar 4, 2022 at 10:21 AM	Message	Chandler RWIF- Addenda 1 REV 1
	Mar 14, 2022 at 8:41 AM	Message	Reminder
	Mar 16, 2022 at 8:58 AM	Internal Note	3/16/2022 - Called and left a voicemail @8:58 am - Jcampos
	Mar 16, 2022 at 9:53 AM	Message	Questions
	Mar 25, 2022 at 9:49 AM	Message	Addendum 2
Quality Overhead Door	Mar 1, 2022 at 8:38 AM	Bid Invite	Invitation to Bid
	Mar 4, 2022 at 9:41 AM	Message	Chandler RWIF- Addenda 1
	Mar 4, 2022 at 10:21 AM	Message	Chandler RWIF- Addenda 1 REV 1
	Mar 14, 2022 at 8:41 AM	Message	Reminder
	Mar 16, 2022 at 9:02 AM	Internal Note	3/16/2022 - Called and Left a message with receptionist for Joani. @9:02 am - Jcampos
	Mar 16, 2022 at 9:53 AM	Message	Questions
	Mar 25, 2022 at 9:49 AM	Message	Addendum 2
Wayne Dalton	Mar 1, 2022 at 8:38 AM	Bid Invite	Invitation to Bid
	Mar 4, 2022 at 9:41 AM	Message	Chandler RWIF- Addenda 1
	Mar 4, 2022 at 10:21 AM	Message	Chandler RWIF- Addenda 1 REV 1
	Mar 14, 2022 at 8:41 AM	Message	Reminder
	Mar 16, 2022 at 9:53 AM	Message	Questions
	Mar 25, 2022 at 9:49 AM	Message	Addendum 2
Wayne Dalton Nationserve	Mar 1, 2022 at 8:38 AM	Bid Invite	Invitation to Bid
	Mar 4, 2022 at 9:41 AM	Message	Chandler RWIF- Addenda 1
	Mar 4, 2022 at 10:21 AM	Message	Chandler RWIF- Addenda 1 REV 1
	Mar 14, 2022 at 8:41 AM	Message	Reminder
	Mar 16, 2022 at 9:06 AM	Internal Note	3/16/2022 - Called and left a voicemail for Larry @9:06 am - Jcampos
	Mar 16, 2022 at 9:53 AM	Message	Questions
	Mar 25, 2022 at 9:49 AM	Message	Addendum 2
09A - Painting & Coatings			
Joseph Painting	Mar 4, 2022 at 9:01 AM	Bid Invite	Invitation to Bid
	Mar 4, 2022 at 9:41 AM	Message	Chandler RWIF- Addenda 1
	Mar 4, 2022 at 10:21 AM	Message	Chandler RWIF- Addenda 1 REV 1
	Mar 10, 2022 at 7:31 AM	Message	Questions and Answers
	Mar 15, 2022 at 8:28 AM	Internal Note	3/10 Larry called me about the project. I had forgotten to add him. I sent him the CDs.
	Mar 16, 2022 at 9:53 AM	Message	Questions
	Mar 16, 2022 at 12:52 PM	Message	Scope Sheet and More
	Mar 17, 2022 at 6:03 AM	Message	Piping LF and Sizes
	Mar 22, 2022 at 11:31 AM	Internal Note	3/22 Larry emailed me about the profiles of the manholes I forward his request to Reed to get him the information he needs.
	Mar 22, 2022 at 11:54 AM	Internal Note	3/22 Spoke with Larry they are bidding the job as a whole. and Will keep the manholes seperate.
	Mar 25, 2022 at 9:49 AM	Message	Addendum 2
Murphy Industrial Coatings	Feb 28, 2022 at 8:14 PM	Bid Invite	Invitation to Bid
	Mar 4, 2022 at 9:41 AM	Message	Chandler RWIF- Addenda 1

McCarthy Subcontractor Outreach

Chandler Reclaimed Water Interconnect Facility

Company/ Description	Timestamp	Type	Subject
	Mar 4, 2022 at 10:21 AM	Message	Chandler RWIF- Addenda 1 REV 1
	Mar 10, 2022 at 7:31 AM	Message	Questions and Answers
	Mar 16, 2022 at 9:53 AM	Message	Questions
	Mar 16, 2022 at 12:52 PM	Message	Scope Sheet and More
	Mar 17, 2022 at 6:03 AM	Message	Piping LF and Sizes
	Mar 22, 2022 at 11:39 AM	Internal Note	3/22 @ 11:35am Spoke Gillies he has no questions, He hasn't looked at it quit yet, and will get me something by Friday.
	Mar 25, 2022 at 9:49 AM	Message	Addendum 2
Penington Painting Company, LLC	Feb 28, 2022 at 8:14 PM	Bid Invite	Invitation to Bid
	Mar 4, 2022 at 9:41 AM	Message	Chandler RWIF- Addenda 1
	Mar 4, 2022 at 10:21 AM	Message	Chandler RWIF- Addenda 1 REV 1
	Mar 10, 2022 at 7:31 AM	Message	Questions and Answers
	Mar 16, 2022 at 9:53 AM	Message	Questions
	Mar 16, 2022 at 12:52 PM	Message	Scope Sheet and More
	Mar 17, 2022 at 6:03 AM	Message	Piping LF and Sizes
	Mar 22, 2022 at 11:46 AM	Internal Note	3/22 @ 11:46am left a message with Emily for Craig or Julio.
	Mar 25, 2022 at 9:49 AM	Message	Addendum 2
Pipeline Video Inspection, LLC dba AIMS Companies	Feb 28, 2022 at 8:14 PM	Bid Invite	Invitation to Bid
	Mar 4, 2022 at 9:41 AM	Message	Chandler RWIF- Addenda 1
	Mar 4, 2022 at 10:21 AM	Message	Chandler RWIF- Addenda 1 REV 1
	Mar 10, 2022 at 7:31 AM	Message	Questions and Answers
	Mar 16, 2022 at 9:53 AM	Message	Questions
	Mar 16, 2022 at 12:52 PM	Message	Scope Sheet and More
	Mar 17, 2022 at 6:03 AM	Message	Piping LF and Sizes
	Mar 22, 2022 at 11:49 AM	Internal Note	3/22 @ 11:48 called Stephen it went to VM. He txted me so I txted him on whether or not he had any questions.
	Mar 22, 2022 at 12:44 PM	Internal Note	3/22 @ 12:34 pm Steve called me back. He didn't have any questions.
	Mar 25, 2022 at 9:49 AM	Message	Addendum 2
Professional Piping Systems	Feb 28, 2022 at 8:14 PM	Bid Invite	Invitation to Bid
	Mar 4, 2022 at 9:41 AM	Message	Chandler RWIF- Addenda 1
	Mar 4, 2022 at 10:21 AM	Message	Chandler RWIF- Addenda 1 REV 1
	Mar 10, 2022 at 7:31 AM	Message	Questions and Answers
	Mar 16, 2022 at 9:53 AM	Message	Questions
	Mar 17, 2022 at 6:03 AM	Message	Piping LF and Sizes
	Mar 25, 2022 at 9:49 AM	Message	Addendum 2
Revolution Industrial	Feb 28, 2022 at 8:14 PM	Bid Invite	Invitation to Bid
	Mar 4, 2022 at 9:41 AM	Message	Chandler RWIF- Addenda 1
	Mar 4, 2022 at 10:21 AM	Message	Chandler RWIF- Addenda 1 REV 1
	Mar 10, 2022 at 7:31 AM	Message	Questions and Answers
	Mar 16, 2022 at 9:53 AM	Message	Questions
	Mar 16, 2022 at 12:52 PM	Message	Scope Sheet and More
	Mar 17, 2022 at 6:03 AM	Message	Piping LF and Sizes
	Mar 17, 2022 at 11:29 AM	Message	Misc. Metals Scope Delineation
	Mar 17, 2022 at 11:33 AM	Message	Differential Between 05A - Structural Steel and 05B - Misc. Metals
	Mar 22, 2022 at 11:51 AM	Internal Note	3/22 @ 11:50 called and left a message for Brennan
	Mar 22, 2022 at 12:16 PM	Internal Note	3/22 @ 12:16 pm Brennan called back and said he had no questions
	Mar 25, 2022 at 9:49 AM	Message	Addendum 2
09B - Acoustical Paneling			
AARA Construction Inc	Mar 1, 2022 at 8:39 AM	Bid Invite	Invitation to Bid
	Mar 4, 2022 at 9:41 AM	Message	Chandler RWIF- Addenda 1
	Mar 4, 2022 at 10:21 AM	Message	Chandler RWIF- Addenda 1 REV 1
	Mar 11, 2022 at 1:59 PM	Message	Specification Section for Panels
	Mar 14, 2022 at 10:19 AM	Internal Note	Called and left a voicemail to confirm bidding and see if there was any questions that I could answer.
	Mar 16, 2022 at 9:53 AM	Message	Questions

McCarthy Subcontractor Outreach

Chandler Reclaimed Water Interconnect Facility

Company/ Description	Timestamp	Type	Subject
	Mar 25, 2022 at 9:49 AM	Message	Addendum 2
Kovach Enclosure Systems, LLC	Mar 1, 2022 at 8:39 AM	Bid Invite	Invitation to Bid
	Mar 4, 2022 at 9:41 AM	Message	Chandler RWIF- Addenda 1
	Mar 4, 2022 at 10:21 AM	Message	Chandler RWIF- Addenda 1 REV 1
Pena Acoustics	Mar 1, 2022 at 8:39 AM	Bid Invite	Invitation to Bid
	Mar 4, 2022 at 9:41 AM	Message	Chandler RWIF- Addenda 1
	Mar 4, 2022 at 10:21 AM	Message	Chandler RWIF- Addenda 1 REV 1
	Mar 11, 2022 at 1:59 PM	Message	Specification Section for Panels
	Mar 14, 2022 at 10:24 AM	Internal Note	I talked to Jose. He is planning on bidding. He had schedule questions and wanted to make sure he could price the materials accurately to meet the time line for the installation.
	Mar 16, 2022 at 9:53 AM	Message	Questions
	Mar 25, 2022 at 9:49 AM	Message	Addendum 2
T-P Acoustics, Inc.	Mar 1, 2022 at 8:39 AM	Bid Invite	Invitation to Bid
	Mar 4, 2022 at 9:41 AM	Message	Chandler RWIF- Addenda 1
	Mar 4, 2022 at 10:21 AM	Message	Chandler RWIF- Addenda 1 REV 1
	Mar 11, 2022 at 1:59 PM	Message	Specification Section for Panels
	Mar 14, 2022 at 10:15 AM	Internal Note	Called and left Kim a voicemail to make sure she received the draft spec for the acoustical panels
	Mar 16, 2022 at 9:53 AM	Message	Questions
	Mar 25, 2022 at 9:49 AM	Message	Addendum 2
Western Acoustics	Mar 1, 2022 at 8:39 AM	Bid Invite	Invitation to Bid
	Mar 4, 2022 at 9:41 AM	Message	Chandler RWIF- Addenda 1
	Mar 4, 2022 at 10:21 AM	Message	Chandler RWIF- Addenda 1 REV 1
	Mar 11, 2022 at 1:59 PM	Message	Specification Section for Panels
	Mar 14, 2022 at 10:28 AM	Internal Note	I talked with Jason and he told me that they will not be bidding.
10A - Identification Devices & Misc. Specialties			
Aidant Fire Protection Company	Mar 1, 2022 at 8:40 AM	Bid Invite	Invitation to Bid
	Mar 4, 2022 at 9:41 AM	Message	Chandler RWIF- Addenda 1
	Mar 4, 2022 at 10:21 AM	Message	Chandler RWIF- Addenda 1 REV 1
	Mar 16, 2022 at 9:17 AM	Internal Note	3/16/2022 - Called and left Bake a Voicemail @9:17 am - Jcampos
	Mar 16, 2022 at 9:39 AM	Message	Reminder
	Mar 16, 2022 at 9:53 AM	Message	Questions
	Mar 25, 2022 at 9:49 AM	Message	Addendum 2
Beach Products	Mar 1, 2022 at 8:40 AM	Bid Invite	Invitation to Bid
	Mar 4, 2022 at 9:41 AM	Message	Chandler RWIF- Addenda 1
	Mar 4, 2022 at 10:21 AM	Message	Chandler RWIF- Addenda 1 REV 1
	Mar 16, 2022 at 9:22 AM	Internal Note	3/16/2022 - Called and spoke to Paul, He said they are going to take a look at the project but are undecided. @9:22 am - Jcampos
	Mar 16, 2022 at 9:39 AM	Message	Reminder
	Mar 16, 2022 at 9:53 AM	Message	Questions
	Mar 25, 2022 at 9:49 AM	Message	Addendum 2
Bird Barrier	Mar 25, 2022 at 1:56 PM	Bid Invite	Invitation to Bid
	Mar 25, 2022 at 2:37 PM	Message	Eagle Eye Bird Deterrent
	Mar 25, 2022 at 2:48 PM	Message	Eagle Eye Bird Deterrent
Busy Blinds LLC	Mar 1, 2022 at 8:40 AM	Bid Invite	Invitation to Bid
	Mar 4, 2022 at 9:41 AM	Message	Chandler RWIF- Addenda 1
	Mar 4, 2022 at 10:21 AM	Message	Chandler RWIF- Addenda 1 REV 1
	Mar 16, 2022 at 9:24 AM	Internal Note	3/16/2022 - Called and left Tiffany a voicemail @ 9:24 am - Jcampos
	Mar 16, 2022 at 9:39 AM	Message	Reminder
	Mar 16, 2022 at 9:53 AM	Message	Questions
	Mar 25, 2022 at 9:49 AM	Message	Addendum 2
Dave Scott & Associates	Mar 1, 2022 at 8:40 AM	Bid Invite	Invitation to Bid
	Mar 4, 2022 at 9:41 AM	Message	Chandler RWIF- Addenda 1

McCarthy Subcontractor Outreach

Chandler Reclaimed Water Interconnect Facility

Company/ Description	Timestamp	Type	Subject
	Mar 4, 2022 at 10:21 AM	Message	Chandler RWIF- Addenda 1 REV 1
	Mar 16, 2022 at 9:28 AM	Internal Note	3/16/2022 - Called and spoke to David, They will be looking at the drawings and specs. @9:28 am - Jcampos
	Mar 16, 2022 at 9:39 AM	Message	Reminder
	Mar 16, 2022 at 9:53 AM	Message	Questions
	Mar 25, 2022 at 9:49 AM	Message	Addendum 2
Fastsigns Goodyear	Mar 1, 2022 at 8:40 AM	Bid Invite	Invitation to Bid
	Mar 4, 2022 at 9:41 AM	Message	Chandler RWIF- Addenda 1
	Mar 4, 2022 at 10:21 AM	Message	Chandler RWIF- Addenda 1 REV 1
	Mar 16, 2022 at 9:53 AM	Message	Questions
	Mar 25, 2022 at 9:49 AM	Message	Addendum 2
Ind Corrosion Products	Mar 1, 2022 at 8:40 AM	Bid Invite	Invitation to Bid
	Mar 4, 2022 at 9:41 AM	Message	Chandler RWIF- Addenda 1
	Mar 4, 2022 at 10:21 AM	Message	Chandler RWIF- Addenda 1 REV 1
	Mar 14, 2022 at 8:34 AM	Message	Additional Doors
	Mar 16, 2022 at 9:39 AM	Message	Reminder
	Mar 16, 2022 at 9:53 AM	Message	Questions
	Mar 25, 2022 at 9:49 AM	Message	Addendum 2
Inter-Co Inc.	Mar 1, 2022 at 8:40 AM	Bid Invite	Invitation to Bid
	Mar 4, 2022 at 9:41 AM	Message	Chandler RWIF- Addenda 1
	Mar 4, 2022 at 10:21 AM	Message	Chandler RWIF- Addenda 1 REV 1
	Mar 16, 2022 at 9:12 AM	Internal Note	3/16/2022 - Called and spoke to receptionist, they said they have to project and it is waiting to be assigned to an estimator and they contact us with any questions. @9:12 am - Jcampos
	Mar 16, 2022 at 9:53 AM	Message	Questions
	Mar 25, 2022 at 9:49 AM	Message	Addendum 2
Interstate Interior Systems, Inc.	Mar 1, 2022 at 8:40 AM	Bid Invite	Invitation to Bid
	Mar 4, 2022 at 9:41 AM	Message	Chandler RWIF- Addenda 1
	Mar 4, 2022 at 10:21 AM	Message	Chandler RWIF- Addenda 1 REV 1
	Mar 16, 2022 at 9:30 AM	Internal Note	3/16/2022 - Called and spoke to Bill and they will not be bidding. @9:30 am - Jcampos
	Mar 16, 2022 at 9:39 AM	Message	Reminder
	Mar 16, 2022 at 9:53 AM	Message	Questions
	Mar 25, 2022 at 9:49 AM	Message	Addendum 2
Mobile Fire Extinguisher, Inc.	Mar 1, 2022 at 8:40 AM	Bid Invite	Invitation to Bid
	Mar 4, 2022 at 9:41 AM	Message	Chandler RWIF- Addenda 1
	Mar 4, 2022 at 10:21 AM	Message	Chandler RWIF- Addenda 1 REV 1
	Mar 16, 2022 at 9:53 AM	Message	Questions
	Mar 25, 2022 at 9:49 AM	Message	Addendum 2
Mountain States Specialties	Mar 1, 2022 at 8:40 AM	Bid Invite	Invitation to Bid
	Mar 4, 2022 at 9:41 AM	Message	Chandler RWIF- Addenda 1
	Mar 4, 2022 at 10:21 AM	Message	Chandler RWIF- Addenda 1 REV 1
	Mar 16, 2022 at 9:35 AM	Internal Note	3/16/2022 - Called and Spoke to receptionist, I resent the package to Bryan and he is possibly Bidding @9:35 am - Jcampos
	Mar 16, 2022 at 9:39 AM	Message	Reminder
	Mar 16, 2022 at 9:53 AM	Message	Questions
	Mar 25, 2022 at 9:49 AM	Message	Addendum 2
Norcon Industries, Inc.	Mar 1, 2022 at 8:40 AM	Bid Invite	Invitation to Bid
	Mar 4, 2022 at 9:41 AM	Message	Chandler RWIF- Addenda 1
	Mar 4, 2022 at 10:21 AM	Message	Chandler RWIF- Addenda 1 REV 1
	Mar 16, 2022 at 9:15 AM	Internal Note	3/16/2022 - Called and left a voicemail for Curtis. @9:15 am - Jcampos
	Mar 16, 2022 at 9:53 AM	Message	Questions
Partitions & Accessories Co.	Mar 1, 2022 at 8:40 AM	Bid Invite	Invitation to Bid
	Mar 4, 2022 at 9:41 AM	Message	Chandler RWIF- Addenda 1
	Mar 4, 2022 at 10:21 AM	Message	Chandler RWIF- Addenda 1 REV 1

McCarthy Subcontractor Outreach

Chandler Reclaimed Water Interconnect Facility

Company/ Description	Timestamp	Type	Subject
	Mar 16, 2022 at 9:39 AM	Message	Reminder
	Mar 16, 2022 at 9:47 AM	Internal Note	3/16/2022 - Called and spoke to receptionist, they will be bidding. @9:46 am - Jcampos
	Mar 16, 2022 at 9:53 AM	Message	Questions
	Mar 25, 2022 at 9:49 AM	Message	Addendum 2
Penco Products	Mar 1, 2022 at 8:40 AM	Bid Invite	Invitation to Bid
	Mar 4, 2022 at 9:41 AM	Message	Chandler RWIF- Addenda 1
	Mar 4, 2022 at 10:21 AM	Message	Chandler RWIF- Addenda 1 REV 1
	Mar 16, 2022 at 9:39 AM	Message	Reminder
	Mar 16, 2022 at 9:49 AM	Internal Note	3/16/2022 - Called an left a voicemail. @9:49 am - Jcampos
	Mar 16, 2022 at 9:53 AM	Message	Questions
	Mar 25, 2022 at 9:49 AM	Message	Addendum 2
Sierra Sign & Service, Inc.	Mar 1, 2022 at 8:40 AM	Bid Invite	Invitation to Bid
	Mar 4, 2022 at 9:41 AM	Message	Chandler RWIF- Addenda 1
Trademark Visual	Mar 1, 2022 at 8:40 AM	Bid Invite	Invitation to Bid
	Mar 4, 2022 at 9:41 AM	Message	Chandler RWIF- Addenda 1
	Mar 4, 2022 at 10:21 AM	Message	Chandler RWIF- Addenda 1 REV 1
	Mar 16, 2022 at 9:39 AM	Message	Reminder
	Mar 16, 2022 at 9:51 AM	Internal Note	3/16/2022 - Called and Left a voicemail for Jerry. @9:51 am - Jcampos
	Mar 16, 2022 at 9:53 AM	Message	Questions
	Mar 25, 2022 at 9:49 AM	Message	Addendum 2
11B/H - 13A/B - Process Equipment			
Coombs-Hopkins	Mar 1, 2022 at 11:36 AM	Bid Invite	Invitation to Bid
	Mar 1, 2022 at 2:41 PM	Internal Note	I talked with Jason Vernon on 3/1/2022. He will be bidding on 4 packages (11C - Gates, 11E - Strainers, 13A - Flat Covers, and 13B - FRP Tanks). I clarified with him that he will need to submit 4 separate bids, on completed Bid Forms found in the Front End Documents (to be issued later this week). I told him that I would get him the spec for WC13A - Extruded Flat Panel Covers once we get it from Wilson.
	Mar 4, 2022 at 9:41 AM	Message	Chandler RWIF- Addenda 1
	Mar 4, 2022 at 10:21 AM	Message	Chandler RWIF- Addenda 1 REV 1
	Mar 16, 2022 at 9:53 AM	Message	Questions
	Mar 18, 2022 at 11:55 AM	Internal Note	Received some "questions" from Jason Vernon regarding the Self Cleaning Strainers spec, and "why their previously submitted comments to Wilson on their DRAFT 90% specs were not incorporated into the actual 90% Specs".
	Mar 25, 2022 at 9:49 AM	Message	Addendum 2
DXP	Mar 1, 2022 at 11:36 AM	Bid Invite	Invitation to Bid
	Mar 3, 2022 at 12:48 PM	Bid Invite	Resent Invitation to Bid
	Mar 3, 2022 at 12:54 PM	Internal Note	I talked with Tony Kinsey on 3/3/2022. He had not seen my ITB (but hadn't looked for it either). I re-sent the invitation. He indicated that he had been working with Wilson, so the expectation is that he will be bidding WC11D - Submersible Pumps.
	Mar 4, 2022 at 9:41 AM	Message	Chandler RWIF- Addenda 1
	Mar 4, 2022 at 10:21 AM	Message	Chandler RWIF- Addenda 1 REV 1
	Mar 8, 2022 at 8:01 AM	Internal Note	I received an email from Tony on 3/7/2020 stating that he is working on the bid for WC11D - Submersible Pumps.
	Mar 16, 2022 at 9:53 AM	Message	Questions
	Mar 22, 2022 at 11:26 AM	Internal Note	I left a voicemail for Tony, following up to make sure that he is still getting us a bid for the Submersible Pumps.
	Mar 25, 2022 at 9:49 AM	Message	Addendum 2
Goble Sampson Associates, Inc.	Mar 1, 2022 at 11:36 AM	Bid Invite	Invitation to Bid
	Mar 3, 2022 at 12:42 PM	Internal Note	I talked with Dan Bertschman on 3/3/2022. He will be bidding on WC11B - Inline Mixer, and WC11C - Gates.
	Mar 4, 2022 at 9:41 AM	Message	Chandler RWIF- Addenda 1
	Mar 4, 2022 at 10:21 AM	Message	Chandler RWIF- Addenda 1 REV 1
	Mar 16, 2022 at 9:53 AM	Message	Questions
	Mar 22, 2022 at 11:29 AM	Internal Note	I left a voicemail for Dan, to confirm that he is still working to get us bids for the Inline Mixer and the Hydraulic Gate.

McCarthy Subcontractor Outreach

Chandler Reclaimed Water Interconnect Facility

Company/ Description	Timestamp	Type	Subject
	Mar 25, 2022 at 9:49 AM	Message	Addendum 2
Hennessey Equipment Sales	Mar 1, 2022 at 11:36 AM	Bid Invite	Invitation to Bid
	Mar 3, 2022 at 1:06 PM	Internal Note	I talked with Tod Hammon on 3/3/2022. He will be bidding on WC11E Strainers. He did have some comments to the Strainer Spec, and I told him to send me an RFI so that I could try to get Wilson to answer it.
	Mar 4, 2022 at 9:41 AM	Message	Chandler RWIF- Addenda 1
	Mar 4, 2022 at 10:21 AM	Message	Chandler RWIF- Addenda 1 REV 1
	Mar 14, 2022 at 3:50 PM	Message	Material List - Ready for Pricing
	Mar 16, 2022 at 9:53 AM	Message	Questions
	Mar 25, 2022 at 9:49 AM	Message	Addendum 2
Hennesy Mechanical Sales	Mar 1, 2022 at 11:36 AM	Bid Invite	Invitation to Bid
	Mar 1, 2022 at 3:18 PM	Internal Note	I talked wit Jeff Pals on 3/1/2022. He will be bidding WC11F - Chemical Metering Pumps (UGSI) as a buy-sell with Hennesy Mechanical Sales completing and signing the Bid Form. He may also be bidding on WC11E - Strainers, but it would be an "or equal". I will call him next week to discuss his review of the Chemical Metering Pump spec.
	Mar 4, 2022 at 9:41 AM	Message	Chandler RWIF- Addenda 1
	Mar 4, 2022 at 10:21 AM	Message	Chandler RWIF- Addenda 1 REV 1
	Mar 9, 2022 at 2:52 PM	Bid Invite	Resent Invitation to Bid
	Mar 11, 2022 at 1:55 PM	Message	Chandler RWIF- Addenda 1 REV 1
	Mar 16, 2022 at 9:53 AM	Message	Questions
	Mar 18, 2022 at 11:58 AM	Internal Note	I have played phone tag with Kevin from UGSI over the last couple of days. I don't know what his questions are, but my last message to him was to go ahead and email me his questions by today to get them to Wilson for answers.
	Mar 22, 2022 at 11:22 AM	Internal Note	I talked with Jeff who is going to call Kevin w/ UGSI to make sure everything is fine and that we will receive their bid no later than 3/25.
	Mar 25, 2022 at 9:49 AM	Message	Addendum 2
IES Southwest, Inc.	Mar 1, 2022 at 11:36 AM	Bid Invite	Invitation to Bid
	Mar 2, 2022 at 9:03 AM	Internal Note	I talked separately with both Ryan Spielman and Joel Wade on 3/2/2022. They will be bidding on WC11C - Gates, WC11E - Strainers, and WC13A - Flat Panel Covers. I will follow up later after they have reviewed the Cover Spec that will be issued with Addendum #1.
	Mar 4, 2022 at 9:41 AM	Message	Chandler RWIF- Addenda 1
	Mar 4, 2022 at 9:59 AM	Internal Note	I received an email from Ryan on 3/4/2022 stating that they (Ultraflote) would not be bidding on WC13A - Flat Panel Covers.
	Mar 4, 2022 at 10:21 AM	Message	Chandler RWIF- Addenda 1 REV 1
	Mar 16, 2022 at 9:53 AM	Message	Questions
	Mar 22, 2022 at 11:33 AM	Internal Note	I left a voicemail with Ryan, to confirm that they are still working on providing a bid for the Hydraulic Gate and Self Cleaning Strainers.
	Mar 22, 2022 at 11:46 AM	Internal Note	I received a call back from Ryan and he did confirm that we will be getting a bid for the Hydraulic Gate, and the Self Cleaning Strainer.
	Mar 25, 2022 at 9:49 AM	Message	Addendum 2
James, Cook and Hobson	Mar 1, 2022 at 11:36 AM	Bid Invite	Invitation to Bid
	Mar 1, 2022 at 2:36 PM	Internal Note	I talked with Ed Martin on 3/1/2022. He will be bidding on 2 packages (11D - Submersible Pumps, and 13B - FRP Tanks). Ed noticed that none of the comments he gave Wilson for the 11D Pumps from the 60% specs were included in the 90% specs.
	Mar 4, 2022 at 9:41 AM	Message	Chandler RWIF- Addenda 1
	Mar 4, 2022 at 10:21 AM	Message	Chandler RWIF- Addenda 1 REV 1
	Mar 16, 2022 at 9:53 AM	Message	Questions
	Mar 22, 2022 at 11:37 AM	Internal Note	I talked with Ed today. He has received the FRP bid, and he is working with Flygt to finalize the Submersible Pump bid and will have everything over to us no later than 3/25.
	Mar 25, 2022 at 9:49 AM	Message	Addendum 2
Mettler Toledo, LLC	Mar 11, 2022 at 9:35 AM	Bid Invite	Invitation to Bid

McCarthy Subcontractor Outreach

Chandler Reclaimed Water Interconnect Facility

Company/ Description	Timestamp	Type	Subject
	Mar 11, 2022 at 9:37 AM	Internal Note	I left Michael Jones a voicemail on 3/9/2022 with no response. I followed up with this invitation and also a separate email requesting a quotation for the Floor Scales WC.
	Mar 14, 2022 at 7:30 AM	Internal Note	I received an email from Brandy Petit stating that Michel Jones no longer works at Mettler-Toledo. Brandy will be working of providing a quote for the Scales and Instruments.
	Mar 16, 2022 at 9:53 AM	Message	Questions
	Mar 22, 2022 at 11:50 AM	Internal Note	Jim Heaphy is now handling the bid for Mettler-Toledo. We have some conversations last week that resulted in some RFIs. Jim is working on completing the bid.
	Mar 25, 2022 at 9:49 AM	Message	Addendum 2
Misco Water	Mar 1, 2022 at 11:36 AM	Bid Invite	Invitation to Bid
	Mar 1, 2022 at 2:45 PM	Internal Note	I called and left a message for Dave Redman on 3/1/2022.
	Mar 3, 2022 at 12:35 PM	Internal Note	I talked with Dave Redman on 3/2/2022 and again on 3/3/2022. He will be bidding on WC11C - Gates, WC13A - Flat Covers, and WC13B FRP Tanks. He may also bid on WC11E as an "or equal". I'm working with Dave on the Flat Panel Covers with Hallsten to convince them to bid even though they are not a listed manufacturer in the Specs.
	Mar 4, 2022 at 9:41 AM	Message	Chandler RWIF- Addenda 1
	Mar 4, 2022 at 10:21 AM	Message	Chandler RWIF- Addenda 1 REV 1
	Mar 11, 2022 at 1:56 PM	Internal Note	Left message with Dave Redman, told him about forthcoming Addendum #2 that will include the answer from Wilson stating that Hallsten will be added back to the specs for the Flat Panel Covers.
	Mar 16, 2022 at 9:53 AM	Message	Questions
	Mar 18, 2022 at 12:01 PM	Internal Note	I had a video meeting with Dave and with Gary Powell from Hallsten regarding the Flat Aluminum Covers. I sent them a copy of the SUEZ general arrangement drawings for them to coordinate with their estimate.
	Mar 22, 2022 at 11:45 AM	Internal Note	I received an email from Dave yesterday (3/21) stating that they would not be able to provide a Flat Panel Cover price from Hallsten because they don't have the proper clearances between membrane cassettes for their cross beams. Their cross beams would need to be removed every time a membrane cassette needed to be removed.
	Mar 25, 2022 at 9:49 AM	Message	Addendum 2
Phoenix Pumps Inc.	Mar 1, 2022 at 11:36 AM	Bid Invite	Invitation to Bid
	Mar 3, 2022 at 12:46 PM	Internal Note	I left a voicemail for Sam McFadden on 3/3/2022.
	Mar 4, 2022 at 9:41 AM	Message	Chandler RWIF- Addenda 1
	Mar 4, 2022 at 10:21 AM	Message	Chandler RWIF- Addenda 1 REV 1
	Mar 8, 2022 at 8:03 AM	Internal Note	I received a call back from Sam on 3/4/2020 stating that he would be bidding on WC11D - Submersible Pumps.
	Mar 16, 2022 at 9:53 AM	Message	Questions
	Mar 18, 2022 at 12:42 PM	Internal Note	I checked in with Sam McFadden, and also checked to make sure they were going to send a quote for the Sample Pump as well.
	Mar 22, 2022 at 11:48 AM	Internal Note	I received confirmation from Sam that we will be getting a bid for the Submersible Pumps, and also the Sample Pump.
	Mar 25, 2022 at 9:49 AM	Message	Addendum 2
SUEZ	Mar 28, 2022 at 1:06 PM	Bid Invite	Invitation to Bid
Suez Water Technologies & Solutions	Mar 28, 2022 at 1:06 PM	Bid Invite	Invitation to Bid
	Mar 28, 2022 at 2:26 PM	Internal Note	After sending Grant the ITB, I called and explained to him that this was to get them access to the 90% Agency Review Documents, and to distribute to his Team so that they have the updated information.
13C - Prefabricated Metal Buildings			
Architectural Building Systems	Feb 28, 2022 at 8:16 PM	Bid Invite	Invitation to Bid
Arizona Corporate Builders	Feb 28, 2022 at 8:16 PM	Bid Invite	Invitation to Bid
	Mar 4, 2022 at 9:41 AM	Message	Chandler RWIF- Addenda 1
	Mar 4, 2022 at 10:21 AM	Message	Chandler RWIF- Addenda 1 REV 1
	Mar 9, 2022 at 9:28 AM	Message	Monorail crane in the blower building
	Mar 15, 2022 at 2:26 PM	Internal Note	I called and left Jay a voicemail to see if they are planning on bidding the project.

McCarthy Subcontractor Outreach

Chandler Reclaimed Water Interconnect Facility

Company/ Description	Timestamp	Type	Subject
	Mar 15, 2022 at 2:29 PM	Internal Note	I called Greg and left a message to see if they were planning on bidding.
	Mar 15, 2022 at 2:30 PM	Internal Note	I called and left Dave a voicemail to see if they were planning on bidding.
	Mar 15, 2022 at 4:16 PM	Internal Note	I just talked to Dave and they are planning on bidding. They had a few RFI's about roof load. I am going to follow up with Wilson to see if those are answered.
	Mar 16, 2022 at 9:53 AM	Message	Questions
	Mar 17, 2022 at 6:16 AM	Message	Q/A - Response
	Mar 25, 2022 at 9:49 AM	Message	Addendum 2
Bunger Steel, Inc.	Feb 28, 2022 at 8:16 PM	Bid Invite	Invitation to Bid
Butler Manufacturing	Feb 28, 2022 at 8:16 PM	Bid Invite	Invitation to Bid
	Mar 4, 2022 at 9:41 AM	Message	Chandler RWIF- Addenda 1
	Mar 4, 2022 at 10:21 AM	Message	Chandler RWIF- Addenda 1 REV 1
	Mar 15, 2022 at 2:35 PM	Internal Note	I called and Tom and he said that he is outsourcing the project to Neil and Fleming West who is locally operated in Mesa.
	Mar 15, 2022 at 2:47 PM	Internal Note	I talked with Neil and they are bidding. He had a question on the R-value of the insulation for the walls of the prefabricated buildings.
	Mar 16, 2022 at 9:53 AM	Message	Questions
	Mar 17, 2022 at 6:16 AM	Message	Q/A - Response
	Mar 25, 2022 at 9:49 AM	Message	Addendum 2
Colton Constructors, Inc.	Feb 28, 2022 at 8:16 PM	Bid Invite	Invitation to Bid
	Mar 4, 2022 at 9:41 AM	Message	Chandler RWIF- Addenda 1
	Mar 4, 2022 at 10:21 AM	Message	Chandler RWIF- Addenda 1 REV 1
	Mar 15, 2022 at 3:02 PM	Internal Note	Talked with Grant and he is planning on bidding and will have his bid ready by 3/25.
	Mar 16, 2022 at 9:53 AM	Message	Questions
	Mar 17, 2022 at 6:16 AM	Message	Q/A - Response
	Mar 25, 2022 at 9:49 AM	Message	Addendum 2
Field Verified Inc.	Feb 28, 2022 at 8:16 PM	Bid Invite	Invitation to Bid
	Mar 4, 2022 at 9:41 AM	Message	Chandler RWIF- Addenda 1
	Mar 4, 2022 at 10:21 AM	Message	Chandler RWIF- Addenda 1 REV 1
	Mar 15, 2022 at 3:03 PM	Internal Note	Field Verified does not do prefabricated buildings.
Fleming West Building Company	Feb 28, 2022 at 8:16 PM	Bid Invite	Invitation to Bid
	Mar 27, 2022 at 11:46 AM	Bid Invite	Invitation to Bid
	Mar 28, 2022 at 2:00 PM	Bid Invite	Invitation to Bid
Hayward Builders	Feb 28, 2022 at 8:16 PM	Bid Invite	Invitation to Bid
	Mar 4, 2022 at 9:41 AM	Message	Chandler RWIF- Addenda 1
	Mar 4, 2022 at 10:21 AM	Message	Chandler RWIF- Addenda 1 REV 1
	Mar 15, 2022 at 3:14 PM	Internal Note	I sent an email to the Hayward team to see if they were planning on bidding this project.
	Mar 16, 2022 at 9:53 AM	Message	Questions
	Mar 25, 2022 at 9:49 AM	Message	Addendum 2
Heitmann & Associates, Inc.	Feb 28, 2022 at 8:16 PM	Bid Invite	Invitation to Bid
Image Building Systems	Feb 28, 2022 at 8:16 PM	Bid Invite	Invitation to Bid
	Mar 4, 2022 at 9:41 AM	Message	Chandler RWIF- Addenda 1
	Mar 4, 2022 at 10:21 AM	Message	Chandler RWIF- Addenda 1 REV 1
	Mar 15, 2022 at 3:05 PM	Internal Note	I called and left Ryan a voicemail to see if he was planning on bidding the project.
	Mar 16, 2022 at 9:53 AM	Message	Questions
	Mar 25, 2022 at 9:49 AM	Message	Addendum 2
Nucor Building Systems	Feb 28, 2022 at 8:16 PM	Bid Invite	Invitation to Bid
	Mar 4, 2022 at 9:41 AM	Message	Chandler RWIF- Addenda 1
	Mar 4, 2022 at 10:21 AM	Message	Chandler RWIF- Addenda 1 REV 1
	Mar 15, 2022 at 3:10 PM	Internal Note	I talked to Joe and they forwarded the project over to Arizona Corporate Builders to bid. Nucor will not be bidding the project.
The Berg Group	Feb 28, 2022 at 8:16 PM	Bid Invite	Invitation to Bid

McCarthy Subcontractor Outreach

Chandler Reclaimed Water Interconnect Facility

Company/ Description	Timestamp	Type	Subject
	Mar 4, 2022 at 9:41 AM	Message	Chandler RWIF- Addenda 1
	Mar 4, 2022 at 10:21 AM	Message	Chandler RWIF- Addenda 1 REV 1
	Mar 15, 2022 at 3:07 PM	Internal Note	Called Chris and left him a message to see if they were planning on bidding this project.
	Mar 15, 2022 at 5:14 PM	Bid Invite	Invitation to Bid
VP Buildings	Feb 28, 2022 at 8:16 PM	Bid Invite	Invitation to Bid
	Mar 4, 2022 at 9:41 AM	Message	Chandler RWIF- Addenda 1
	Mar 4, 2022 at 10:21 AM	Message	Chandler RWIF- Addenda 1 REV 1
	Mar 15, 2022 at 3:08 PM	Internal Note	I called and left Shae a voicemail to see if he was planning on bidding.
	Mar 16, 2022 at 9:53 AM	Message	Questions
	Mar 25, 2022 at 9:49 AM	Message	Addendum 2
13D - Wet Pipe Fire Extinguishing System			
Aero Automatic Sprinkler Company	Mar 1, 2022 at 8:41 AM	Bid Invite	Invitation to Bid
	Mar 4, 2022 at 9:41 AM	Message	Chandler RWIF- Addenda 1
	Mar 4, 2022 at 10:21 AM	Message	Chandler RWIF- Addenda 1 REV 1
	Mar 10, 2022 at 7:53 AM	Message	Questions- Answered
	Mar 14, 2022 at 10:46 AM	Internal Note	I called and left Tammy a voicemail to see if Aero was planning on bidding the project or not.
	Mar 16, 2022 at 9:53 AM	Message	Questions
	Mar 25, 2022 at 9:49 AM	Message	Addendum 2
Arizona Verde Fire Protection - MSC	Mar 1, 2022 at 8:41 AM	Bid Invite	Invitation to Bid
	Mar 4, 2022 at 9:41 AM	Message	Chandler RWIF- Addenda 1
	Mar 4, 2022 at 10:21 AM	Message	Chandler RWIF- Addenda 1 REV 1
	Mar 10, 2022 at 7:53 AM	Message	Questions- Answered
	Mar 14, 2022 at 10:44 AM	Internal Note	Called and left Wade a message. I just wanted to see if he had any questions or if there was anything I could do to help.
	Mar 16, 2022 at 9:53 AM	Message	Questions
	Mar 25, 2022 at 9:49 AM	Message	Addendum 2
Climatec	Mar 1, 2022 at 8:41 AM	Bid Invite	Invitation to Bid
	Mar 4, 2022 at 9:41 AM	Message	Chandler RWIF- Addenda 1
	Mar 4, 2022 at 10:21 AM	Message	Chandler RWIF- Addenda 1 REV 1
	Mar 10, 2022 at 7:53 AM	Message	Questions- Answered
	Mar 14, 2022 at 10:52 AM	Internal Note	I called and left John a voicemail to see if he was planning on bidding or not.
	Mar 16, 2022 at 9:53 AM	Message	Questions
	Mar 25, 2022 at 9:49 AM	Message	Addendum 2
Foothills Fire Protection, Inc.	Mar 1, 2022 at 8:41 AM	Bid Invite	Invitation to Bid
	Mar 4, 2022 at 9:41 AM	Message	Chandler RWIF- Addenda 1
	Mar 4, 2022 at 10:21 AM	Message	Chandler RWIF- Addenda 1 REV 1
	Mar 10, 2022 at 7:53 AM	Message	Questions- Answered
	Mar 14, 2022 at 10:49 AM	Internal Note	I called to confirm bidding and Kevin will be providing a bid for the project. He said he will let me know if he has any questions.
	Mar 16, 2022 at 9:53 AM	Message	Questions
	Mar 25, 2022 at 9:49 AM	Message	Addendum 2
RCI Systems, LLC	Mar 1, 2022 at 8:41 AM	Bid Invite	Invitation to Bid
	Mar 4, 2022 at 9:41 AM	Message	Chandler RWIF- Addenda 1
	Mar 4, 2022 at 10:21 AM	Message	Chandler RWIF- Addenda 1 REV 1
	Mar 10, 2022 at 7:53 AM	Message	Questions- Answered
	Mar 14, 2022 at 10:51 AM	Internal Note	I called and left Jeff a voicemail to confirm if RCI was planning on bidding. I assume they will since they are doing the fire suppression for the Chandler Improvements project at the same site.
	Mar 16, 2022 at 9:53 AM	Message	Questions
	Mar 25, 2022 at 9:49 AM	Message	Addendum 2
Western States Fire Protection Company	Mar 1, 2022 at 8:41 AM	Bid Invite	Invitation to Bid
	Mar 4, 2022 at 9:41 AM	Message	Chandler RWIF- Addenda 1
	Mar 4, 2022 at 10:21 AM	Message	Chandler RWIF- Addenda 1 REV 1

McCarthy Subcontractor Outreach

Chandler Reclaimed Water Interconnect Facility

Company/ Description	Timestamp	Type	Subject
	Mar 10, 2022 at 7:53 AM	Message	Questions- Answered
	Mar 14, 2022 at 10:57 AM	Internal Note	Called and talked with Aaron. For some reason he wasn't sent the bid invite. I am sending it over to him and he will let me know if he is planning on bidding or not.
	Mar 16, 2022 at 9:53 AM	Message	Questions
	Mar 16, 2022 at 2:51 PM	Internal Note	I talked with Mark and he told me that he is bidding and starting going through the plans and specs. He needed a little direction on where to look in the drawings.
	Mar 25, 2022 at 9:49 AM	Message	Addendum 2
14A - Hoist, Trolleys, & Monorail			
Ace Industries, Inc.	Feb 28, 2022 at 8:16 PM	Bid Invite	Invitation to Bid
	Mar 4, 2022 at 9:41 AM	Message	Chandler RWIF- Addenda 1
	Mar 4, 2022 at 10:21 AM	Message	Chandler RWIF- Addenda 1 REV 1
	Mar 16, 2022 at 9:53 AM	Message	Questions
	Mar 22, 2022 at 12:00 PM	Internal Note	3/22 @ 11:59 pm called and left message for Mike.
	Mar 25, 2022 at 9:49 AM	Message	Addendum 2
Bragg Investment Company, Inc.	Feb 28, 2022 at 8:16 PM	Bid Invite	Invitation to Bid
	Mar 4, 2022 at 9:41 AM	Message	Chandler RWIF- Addenda 1
	Mar 4, 2022 at 10:21 AM	Message	Chandler RWIF- Addenda 1 REV 1
	Mar 16, 2022 at 9:53 AM	Message	Questions
	Mar 25, 2022 at 9:49 AM	Message	Addendum 2
Goble Sampson Associates, Inc.	Feb 28, 2022 at 8:16 PM	Bid Invite	Invitation to Bid
	Mar 4, 2022 at 9:41 AM	Message	Chandler RWIF- Addenda 1
	Mar 4, 2022 at 10:21 AM	Message	Chandler RWIF- Addenda 1 REV 1
	Mar 16, 2022 at 9:53 AM	Message	Questions
	Mar 25, 2022 at 9:49 AM	Message	Addendum 2
Hoist Systems, Inc.	Feb 28, 2022 at 8:16 PM	Bid Invite	Invitation to Bid
	Mar 4, 2022 at 9:41 AM	Message	Chandler RWIF- Addenda 1
	Mar 4, 2022 at 10:21 AM	Message	Chandler RWIF- Addenda 1 REV 1
	Mar 16, 2022 at 9:53 AM	Message	Questions
	Mar 22, 2022 at 12:02 PM	Internal Note	3/22 @12:01pm Spoke with Jeff yes he will look at it.
	Mar 25, 2022 at 9:49 AM	Message	Addendum 2
Konecranes, Inc.	Feb 28, 2022 at 8:16 PM	Bid Invite	Invitation to Bid
	Mar 4, 2022 at 9:41 AM	Message	Chandler RWIF- Addenda 1
	Mar 4, 2022 at 10:21 AM	Message	Chandler RWIF- Addenda 1 REV 1
	Mar 16, 2022 at 9:53 AM	Message	Questions
	Mar 25, 2022 at 9:49 AM	Message	Addendum 2
Southwest Industrial Rigging - Phx	Feb 28, 2022 at 8:16 PM	Bid Invite	Invitation to Bid
	Mar 4, 2022 at 9:41 AM	Message	Chandler RWIF- Addenda 1
	Mar 4, 2022 at 10:21 AM	Message	Chandler RWIF- Addenda 1 REV 1
	Mar 16, 2022 at 9:53 AM	Message	Questions
	Mar 25, 2022 at 9:49 AM	Message	Addendum 2
15A - Process Mechanical			
ALB Piping Products & Services, LLC.	Mar 1, 2022 at 3:54 PM	Bid Invite	Invitation to Bid
	Mar 4, 2022 at 9:41 AM	Message	Chandler RWIF- Addenda 1
	Mar 4, 2022 at 10:21 AM	Message	Chandler RWIF- Addenda 1 REV 1
	Mar 14, 2022 at 3:50 PM	Message	Material List - Ready for Pricing
	Mar 16, 2022 at 9:53 AM	Message	Questions
	Mar 25, 2022 at 9:49 AM	Message	Addendum 2
AZCO	Mar 1, 2022 at 3:54 PM	Bid Invite	Invitation to Bid
	Mar 4, 2022 at 9:41 AM	Message	Chandler RWIF- Addenda 1
	Mar 4, 2022 at 10:21 AM	Message	Chandler RWIF- Addenda 1 REV 1
	Mar 14, 2022 at 8:31 AM	Bid Invite	Invitation to Bid
	Mar 14, 2022 at 3:50 PM	Message	Material List - Ready for Pricing
	Mar 16, 2022 at 9:53 AM	Message	Questions
	Mar 25, 2022 at 9:49 AM	Message	Addendum 2

McCarthy Subcontractor Outreach

Chandler Reclaimed Water Interconnect Facility

Company/ Description	Timestamp	Type	Subject
BPS Supply Group	Mar 1, 2022 at 3:54 PM	Bid Invite	Invitation to Bid
	Mar 4, 2022 at 9:41 AM	Message	Chandler RWIF- Addenda 1
	Mar 4, 2022 at 10:21 AM	Message	Chandler RWIF- Addenda 1 REV 1
	Mar 14, 2022 at 3:50 PM	Message	Material List - Ready for Pricing
	Mar 16, 2022 at 9:53 AM	Message	Questions
	Mar 16, 2022 at 12:10 PM	Bid Invite	Invitation to Bid
	Mar 25, 2022 at 9:49 AM	Message	Addendum 2
Burns & McDonnell	Mar 14, 2022 at 8:31 AM	Bid Invite	Invitation to Bid
	Mar 14, 2022 at 3:50 PM	Message	Material List - Ready for Pricing
	Mar 16, 2022 at 9:53 AM	Message	Questions
	Mar 25, 2022 at 9:49 AM	Message	Addendum 2
C&B Piping, Inc.	Mar 1, 2022 at 3:54 PM	Bid Invite	Invitation to Bid
	Mar 4, 2022 at 9:41 AM	Message	Chandler RWIF- Addenda 1
	Mar 4, 2022 at 10:21 AM	Message	Chandler RWIF- Addenda 1 REV 1
	Mar 14, 2022 at 3:50 PM	Message	Material List - Ready for Pricing
	Mar 16, 2022 at 9:53 AM	Message	Questions
	Mar 25, 2022 at 9:49 AM	Message	Addendum 2
Carpenter & Paterson	Mar 1, 2022 at 3:54 PM	Bid Invite	Invitation to Bid
	Mar 4, 2022 at 9:41 AM	Message	Chandler RWIF- Addenda 1
	Mar 4, 2022 at 10:21 AM	Message	Chandler RWIF- Addenda 1 REV 1
	Mar 14, 2022 at 3:50 PM	Message	Material List - Ready for Pricing
	Mar 16, 2022 at 9:53 AM	Message	Questions
	Mar 25, 2022 at 9:49 AM	Message	Addendum 2
Copper State Bolt & Nut Co Inc	Mar 1, 2022 at 3:54 PM	Bid Invite	Invitation to Bid
	Mar 4, 2022 at 9:41 AM	Message	Chandler RWIF- Addenda 1
	Mar 4, 2022 at 10:21 AM	Message	Chandler RWIF- Addenda 1 REV 1
	Mar 14, 2022 at 3:50 PM	Message	Material List - Ready for Pricing
	Mar 16, 2022 at 9:53 AM	Message	Questions
	Mar 22, 2022 at 8:50 AM	Bid Invite	Resent Invitation to Bid
	Mar 25, 2022 at 9:49 AM	Message	Addendum 2
Core and Main	Mar 1, 2022 at 3:54 PM	Bid Invite	Invitation to Bid
	Mar 4, 2022 at 9:41 AM	Message	Chandler RWIF- Addenda 1
	Mar 4, 2022 at 10:21 AM	Message	Chandler RWIF- Addenda 1 REV 1
	Mar 14, 2022 at 3:50 PM	Message	Material List - Ready for Pricing
	Mar 16, 2022 at 9:53 AM	Message	Questions
	Mar 25, 2022 at 9:49 AM	Message	Addendum 2
Dana Kepner Company, Inc.	Mar 1, 2022 at 3:54 PM	Bid Invite	Invitation to Bid
	Mar 4, 2022 at 9:41 AM	Message	Chandler RWIF- Addenda 1
	Mar 4, 2022 at 10:21 AM	Message	Chandler RWIF- Addenda 1 REV 1
	Mar 14, 2022 at 3:50 PM	Message	Material List - Ready for Pricing
	Mar 16, 2022 at 9:53 AM	Message	Questions
	Mar 25, 2022 at 9:49 AM	Message	Addendum 2
Duncan Bolt	Mar 1, 2022 at 3:54 PM	Bid Invite	Invitation to Bid
	Mar 4, 2022 at 9:41 AM	Message	Chandler RWIF- Addenda 1
	Mar 4, 2022 at 10:21 AM	Message	Chandler RWIF- Addenda 1 REV 1
	Mar 14, 2022 at 3:50 PM	Message	Material List - Ready for Pricing
	Mar 16, 2022 at 9:53 AM	Message	Questions
	Mar 25, 2022 at 9:49 AM	Message	Addendum 2
Farwest Insulation Contracting	Mar 3, 2022 at 11:58 AM	Bid Invite	Invitation to Bid
	Mar 4, 2022 at 9:41 AM	Message	Chandler RWIF- Addenda 1
	Mar 4, 2022 at 10:21 AM	Message	Chandler RWIF- Addenda 1 REV 1
	Mar 14, 2022 at 3:50 PM	Message	Material List - Ready for Pricing
	Mar 16, 2022 at 9:53 AM	Message	Questions
	Mar 25, 2022 at 9:49 AM	Message	Addendum 2
Fortiline Waterworks	Mar 1, 2022 at 3:54 PM	Bid Invite	Invitation to Bid

McCarthy Subcontractor Outreach

Chandler Reclaimed Water Interconnect Facility

Company/ Description	Timestamp	Type	Subject
	Mar 4, 2022 at 9:41 AM	Message	Chandler RWIF- Addenda 1
	Mar 4, 2022 at 10:21 AM	Message	Chandler RWIF- Addenda 1 REV 1
	Mar 14, 2022 at 3:50 PM	Message	Material List - Ready for Pricing
	Mar 16, 2022 at 9:53 AM	Message	Questions
	Mar 25, 2022 at 9:49 AM	Message	Addendum 2
Harrington Industrial Plastics	Mar 1, 2022 at 3:54 PM	Bid Invite	Invitation to Bid
	Mar 4, 2022 at 9:41 AM	Message	Chandler RWIF- Addenda 1
	Mar 4, 2022 at 10:21 AM	Message	Chandler RWIF- Addenda 1 REV 1
	Mar 14, 2022 at 3:50 PM	Message	Material List - Ready for Pricing
	Mar 16, 2022 at 9:53 AM	Message	Questions
	Mar 25, 2022 at 9:49 AM	Message	Addendum 2
Hennessey Equipment Sales	Mar 1, 2022 at 3:54 PM	Bid Invite	Invitation to Bid
	Mar 4, 2022 at 9:41 AM	Message	Chandler RWIF- Addenda 1
	Mar 4, 2022 at 10:21 AM	Message	Chandler RWIF- Addenda 1 REV 1
	Mar 14, 2022 at 3:50 PM	Message	Material List - Ready for Pricing
	Mar 16, 2022 at 9:53 AM	Message	Questions
	Mar 25, 2022 at 9:49 AM	Message	Addendum 2
Jifco, Inc.	Mar 1, 2022 at 3:54 PM	Bid Invite	Invitation to Bid
	Mar 4, 2022 at 9:41 AM	Message	Chandler RWIF- Addenda 1
	Mar 4, 2022 at 10:21 AM	Message	Chandler RWIF- Addenda 1 REV 1
	Mar 7, 2022 at 10:47 AM	Bid Invite	Invitation to Bid
	Mar 14, 2022 at 3:50 PM	Message	Material List - Ready for Pricing
	Mar 16, 2022 at 9:53 AM	Message	Questions
	Mar 25, 2022 at 9:49 AM	Message	Addendum 2
Karber Mechanical Insulation, Inc.	Mar 3, 2022 at 12:02 PM	Bid Invite	Invitation to Bid
	Mar 4, 2022 at 9:41 AM	Message	Chandler RWIF- Addenda 1
	Mar 4, 2022 at 10:21 AM	Message	Chandler RWIF- Addenda 1 REV 1
	Mar 14, 2022 at 3:50 PM	Message	Material List - Ready for Pricing
	Mar 16, 2022 at 9:53 AM	Message	Questions
	Mar 25, 2022 at 9:49 AM	Message	Addendum 2
Miller Insulation Co., Inc.	Mar 15, 2022 at 3:20 PM	Bid Invite	Invitation to Bid
	Mar 16, 2022 at 9:53 AM	Message	Questions
	Mar 25, 2022 at 9:49 AM	Message	Addendum 2
Premier Mechanical Insulation	Mar 3, 2022 at 11:55 AM	Bid Invite	Invitation to Bid
	Mar 4, 2022 at 9:41 AM	Message	Chandler RWIF- Addenda 1
	Mar 4, 2022 at 10:21 AM	Message	Chandler RWIF- Addenda 1 REV 1
	Mar 14, 2022 at 3:50 PM	Message	Material List - Ready for Pricing
	Mar 16, 2022 at 9:53 AM	Message	Questions
	Mar 25, 2022 at 9:49 AM	Message	Addendum 2
Professional Piping Systems	Mar 1, 2022 at 3:54 PM	Bid Invite	Invitation to Bid
	Mar 4, 2022 at 9:41 AM	Message	Chandler RWIF- Addenda 1
	Mar 4, 2022 at 10:21 AM	Message	Chandler RWIF- Addenda 1 REV 1
	Mar 14, 2022 at 3:50 PM	Message	Material List - Ready for Pricing
	Mar 16, 2022 at 9:53 AM	Message	Questions
	Mar 23, 2022 at 10:12 AM	Message	SS pipe and fittings takeoff list.
	Mar 25, 2022 at 9:49 AM	Message	Addendum 2
Ryan Herco Flow Solutions	Mar 1, 2022 at 3:54 PM	Bid Invite	Invitation to Bid
	Mar 4, 2022 at 9:41 AM	Message	Chandler RWIF- Addenda 1
	Mar 4, 2022 at 10:21 AM	Message	Chandler RWIF- Addenda 1 REV 1
	Mar 14, 2022 at 3:50 PM	Message	Material List - Ready for Pricing
	Mar 16, 2022 at 9:53 AM	Message	Questions
	Mar 25, 2022 at 9:49 AM	Message	Addendum 2
Sac Inc.	Mar 1, 2022 at 3:54 PM	Bid Invite	Invitation to Bid
	Mar 4, 2022 at 9:41 AM	Message	Chandler RWIF- Addenda 1
	Mar 4, 2022 at 10:21 AM	Message	Chandler RWIF- Addenda 1 REV 1

McCarthy Subcontractor Outreach

Chandler Reclaimed Water Interconnect Facility

Company/ Description	Timestamp	Type	Subject
	Mar 14, 2022 at 3:50 PM	Message	Material List - Ready for Pricing
Southwest Valve & Equipment	Mar 1, 2022 at 3:54 PM	Bid Invite	Invitation to Bid
	Mar 4, 2022 at 9:41 AM	Message	Chandler RWIF- Addenda 1
	Mar 4, 2022 at 10:21 AM	Message	Chandler RWIF- Addenda 1 REV 1
	Mar 14, 2022 at 3:50 PM	Message	Material List - Ready for Pricing
	Mar 16, 2022 at 9:53 AM	Message	Questions
	Mar 25, 2022 at 9:49 AM	Message	Addendum 2
Tri Star Industrial	Mar 1, 2022 at 3:54 PM	Bid Invite	Invitation to Bid
	Mar 4, 2022 at 9:41 AM	Message	Chandler RWIF- Addenda 1
	Mar 4, 2022 at 10:21 AM	Message	Chandler RWIF- Addenda 1 REV 1
	Mar 14, 2022 at 3:50 PM	Message	Material List - Ready for Pricing
	Mar 16, 2022 at 9:53 AM	Message	Questions
	Mar 25, 2022 at 9:49 AM	Message	Addendum 2
West Tech LLC	Mar 1, 2022 at 3:54 PM	Bid Invite	Invitation to Bid
	Mar 4, 2022 at 9:41 AM	Message	Chandler RWIF- Addenda 1
	Mar 4, 2022 at 10:21 AM	Message	Chandler RWIF- Addenda 1 REV 1
	Mar 14, 2022 at 3:50 PM	Message	Material List - Ready for Pricing
	Mar 16, 2022 at 9:53 AM	Message	Questions
	Mar 25, 2022 at 9:49 AM	Message	Addendum 2
15B - HVAC & Plumbing			
Comfort Systems USA Southwest	Mar 1, 2022 at 10:43 AM	Bid Invite	Invitation to Bid
	Mar 2, 2022 at 3:48 PM	Internal Note	I spoke with Melissa and let her know that our self perform group would not be bidding the job. I asked if that would make any difference in there decision to not bid and she said that she would let me know if they change their mind.
Commercial Air, Inc.	Mar 1, 2022 at 10:43 AM	Bid Invite	Invitation to Bid
	Mar 2, 2022 at 3:23 PM	Internal Note	Jason still has to review the drawings and will get back to me once he does.
	Mar 4, 2022 at 9:41 AM	Message	Chandler RWIF- Addenda 1
	Mar 4, 2022 at 10:21 AM	Message	Chandler RWIF- Addenda 1 REV 1
	Mar 14, 2022 at 3:04 PM	Bid Invite	Invitation to Bid
	Mar 14, 2022 at 3:05 PM	Bid Invite	Invitation to Bid
	Mar 16, 2022 at 9:53 AM	Message	Questions
	Mar 17, 2022 at 8:29 AM	Internal Note	Called and left message for Karl
	Mar 25, 2022 at 9:49 AM	Message	Addendum 2
HACI Mechanical Contractors, Inc.	Mar 1, 2022 at 10:43 AM	Bid Invite	Invitation to Bid
	Mar 2, 2022 at 3:29 PM	Internal Note	Message left for Mike
	Mar 4, 2022 at 9:41 AM	Message	Chandler RWIF- Addenda 1
	Mar 4, 2022 at 10:21 AM	Message	Chandler RWIF- Addenda 1 REV 1
	Mar 7, 2022 at 12:16 PM	Internal Note	Sent follow up email to Amelia and Mike
	Mar 14, 2022 at 3:30 PM	Bid Invite	Invitation to Bid
	Mar 14, 2022 at 3:36 PM	Internal Note	I followed up with Mike again and he said that they don't usually like to do water treatment plant projects and that they wouldn't be bidding
Karber Corporation dba K CORP	Mar 1, 2022 at 10:43 AM	Bid Invite	Invitation to Bid
	Mar 2, 2022 at 3:18 PM	Internal Note	Aaron said they are interested, but havn
	Mar 2, 2022 at 3:19 PM	Internal Note	t decided yet. He will let me know once they do.
	Mar 4, 2022 at 9:41 AM	Message	Chandler RWIF- Addenda 1
	Mar 4, 2022 at 10:21 AM	Message	Chandler RWIF- Addenda 1 REV 1
	Mar 7, 2022 at 12:00 PM	Internal Note	Sent follow up email to Aaron and Steve
	Mar 14, 2022 at 3:18 PM	Internal Note	Aaron confirmed with me that they are planning on bidding. He also let me know that they are able to supply sample pumps and eyewash stations
	Mar 16, 2022 at 9:53 AM	Message	Questions
	Mar 16, 2022 at 12:54 PM	Internal Note	Sent email reminding them to renew prequal status
	Mar 21, 2022 at 1:38 PM	Internal Note	Aaron is working on prequal renewal
	Mar 25, 2022 at 9:49 AM	Message	Addendum 2
	Mar 25, 2022 at 12:44 PM	Internal Note	Followed up with email to confirm they are sending bid today

McCarthy Subcontractor Outreach

Chandler Reclaimed Water Interconnect Facility

Company/ Description	Timestamp	Type	Subject
Midstate Mechanical	Mar 1, 2022 at 10:43 AM	Bid Invite	Invitation to Bid
	Mar 2, 2022 at 3:51 PM	Internal Note	Evan let me know that Midstate won't be bidding because they usually don't pursue water treatment facility type jobs
Patriot Mechanical AZ	Mar 1, 2022 at 10:43 AM	Bid Invite	Invitation to Bid
	Mar 2, 2022 at 3:37 PM	Internal Note	I spoke with Christian and he let me know that they mostly do heating and chilled water projects so they wouldn't be able to complete tis scope
Pueblo Mechanical & Controls	Mar 2, 2022 at 3:23 PM	Bid Invite	Invitation to Bid
	Mar 2, 2022 at 3:40 PM	Internal Note	Jason still has to review the drawings and will get back to me once he does.
	Mar 4, 2022 at 9:41 AM	Message	Chandler RWIF- Addenda 1
	Mar 4, 2022 at 10:21 AM	Message	Chandler RWIF- Addenda 1 REV 1
	Mar 7, 2022 at 12:04 PM	Internal Note	Sent follow up email to Jason
	Mar 14, 2022 at 3:22 PM	Internal Note	Called and left message for Jason
	Mar 16, 2022 at 9:53 AM	Message	Questions
	Mar 25, 2022 at 9:49 AM	Message	Addendum 2
TDIndustries, Inc.	Mar 1, 2022 at 10:43 AM	Bid Invite	Invitation to Bid
	Mar 1, 2022 at 12:19 PM	Bid Invite	Invitation to Bid
	Mar 2, 2022 at 3:39 PM	Internal Note	Left message for Chad
	Mar 2, 2022 at 4:00 PM	Internal Note	Chad got back to me and let me know they normally just do commercial type jobs so they won't be bidding
Tempe Mechanical	Mar 1, 2022 at 10:43 AM	Bid Invite	Invitation to Bid
	Mar 2, 2022 at 3:05 PM	Internal Note	I spoke with Julia and she said that they are very interested in the project. She will confirm with me once she knows if they are going to bid it.
	Mar 4, 2022 at 9:41 AM	Message	Chandler RWIF- Addenda 1
	Mar 4, 2022 at 10:21 AM	Message	Chandler RWIF- Addenda 1 REV 1
	Mar 7, 2022 at 12:03 PM	Internal Note	Sent follow up email to Julia
	Mar 14, 2022 at 3:22 PM	Internal Note	Called and left message for Julia
	Mar 16, 2022 at 8:35 AM	Internal Note	Called and left message for Carlos
	Mar 16, 2022 at 9:53 AM	Message	Questions
	Mar 16, 2022 at 12:54 PM	Internal Note	Carlos let me know that he will have an answer for me by monday
	Mar 22, 2022 at 9:11 AM	Internal Note	Carlos confirmed that they will be bidding
	Mar 25, 2022 at 9:49 AM	Message	Addendum 2
	Mar 25, 2022 at 12:44 PM	Internal Note	Followed up with email to confirm they are sending bid today
Uni-Tech Mechanical	Mar 1, 2022 at 10:43 AM	Bid Invite	Invitation to Bid
	Mar 2, 2022 at 3:43 PM	Internal Note	Left message for Jose
	Mar 4, 2022 at 9:41 AM	Message	Chandler RWIF- Addenda 1
	Mar 4, 2022 at 10:21 AM	Message	Chandler RWIF- Addenda 1 REV 1
	Mar 7, 2022 at 12:09 PM	Internal Note	I spoke with Don and he said that they don't typically pursue water treatment plant projects and are busy with other work so they won't be bidding
16A - Electrical, Instrumentation, & Control			
Corbins Service Electric, LLC	Feb 28, 2022 at 8:17 PM	Bid Invite	Invitation to Bid
	Mar 2, 2022 at 3:26 PM	Bid Invite	Invitation to Bid
	Mar 4, 2022 at 9:41 AM	Message	Chandler RWIF- Addenda 1
	Mar 4, 2022 at 10:21 AM	Message	Chandler RWIF- Addenda 1 REV 1
	Mar 10, 2022 at 6:51 AM	Message	Q/A- RWIF
	Mar 10, 2022 at 3:15 PM	Internal Note	3/10 @8:44 am spoke with Kirk about breakouts and more questions. Stated I would send out an email with an updated break out list for them.
	Mar 16, 2022 at 9:53 AM	Message	Questions
	Mar 16, 2022 at 10:08 AM	Message	Updated Electrical Breakout
	Mar 17, 2022 at 9:51 AM	Message	P&ID Responsibility Matrix
	Mar 18, 2022 at 3:39 PM	Message	Q/A - RWIF
	Mar 21, 2022 at 3:19 PM	Message	Scope Meetings
	Mar 24, 2022 at 1:23 PM	Message	Scope Sheet
	Mar 25, 2022 at 9:38 AM	Message	Q/A - RWIF
	Mar 25, 2022 at 9:49 AM	Message	Addendum 2

McCarthy Subcontractor Outreach

Chandler Reclaimed Water Interconnect Facility

Company/ Description	Timestamp	Type	Subject
	Mar 25, 2022 at 9:58 AM	Internal Note	3/25 - 10:00am - Called Kirk no answer, left a message
	Mar 25, 2022 at 10:07 AM	Internal Note	3/25 - @10:05 am - Spoke with Kirk, was asking about what we were looking for in the bid form regarding documents to submit?
	Mar 25, 2022 at 10:49 AM	Internal Note	3/25 - 10:40 am - Spoke with Kirk, clarified that they just need to submit the breakouts that were sent out and did not need to submit all of their detailed backup estimate info
	Mar 31, 2022 at 1:17 PM	Internal Note	3/31 @1:15pm - Called Kirk and left a message regarding their updated pricing based on the excavation add and the crane add.
	Mar 31, 2022 at 1:28 PM	Internal Note	3/31 @1:25pm - Spoke with Kirk, they are trying to send over the updated pricing today. He is waiting on the final approval on the terms and conditions from Greg.
Industrial Power Solutions LLC	Feb 28, 2022 at 8:17 PM	Bid Invite	Invitation to Bid
	Mar 4, 2022 at 9:41 AM	Message	Chandler RWIF- Addenda 1
	Mar 4, 2022 at 10:21 AM	Message	Chandler RWIF- Addenda 1 REV 1
	Mar 10, 2022 at 6:51 AM	Message	Q/A- RWIF
	Mar 15, 2022 at 9:22 AM	Internal Note	3/15 @9:00am - Called Lucas at IPS and left a message
	Mar 15, 2022 at 9:47 AM	Internal Note	3/15 @ 9:45 - Talked to Lucas, he said they don't currently have any questions right now but they will make sure they get any questions submitted by friday.
	Mar 16, 2022 at 9:53 AM	Message	Questions
	Mar 16, 2022 at 10:08 AM	Message	Updated Electrical Breakout
	Mar 17, 2022 at 9:51 AM	Message	P&ID Responsibility Matrix
	Mar 18, 2022 at 3:39 PM	Message	Q/A - RWIF
	Mar 21, 2022 at 3:19 PM	Message	Scope Meetings
	Mar 22, 2022 at 1:12 PM	Message	Scope Meetings
	Mar 24, 2022 at 1:23 PM	Message	Scope Sheet
	Mar 25, 2022 at 9:38 AM	Message	Q/A - RWIF
	Mar 25, 2022 at 9:49 AM	Message	Addendum 2
	Mar 25, 2022 at 9:56 AM	Internal Note	3/25 @ 9:50 am - Spoke with Lucas, they dont need extra time but may need to extend the bid time past 5pm
Ludvik Electric	Feb 28, 2022 at 8:17 PM	Bid Invite	Invitation to Bid
	Mar 4, 2022 at 9:41 AM	Message	Chandler RWIF- Addenda 1
	Mar 4, 2022 at 10:21 AM	Message	Chandler RWIF- Addenda 1 REV 1
	Mar 10, 2022 at 6:51 AM	Message	Q/A- RWIF
	Mar 15, 2022 at 9:22 AM	Internal Note	3/15 @9:20am - Spoke with Andrew at Ludvik. He said they have questions and are planning on sending in questions either today or tomorrow.
	Mar 16, 2022 at 9:53 AM	Message	Questions
	Mar 16, 2022 at 10:08 AM	Message	Updated Electrical Breakout
	Mar 17, 2022 at 9:51 AM	Message	P&ID Responsibility Matrix
	Mar 17, 2022 at 1:21 PM	Message	Chandler Questions
	Mar 18, 2022 at 3:39 PM	Message	Q/A - RWIF
	Mar 21, 2022 at 3:19 PM	Message	Scope Meetings
	Mar 24, 2022 at 1:23 PM	Message	Scope Sheet
	Mar 25, 2022 at 9:38 AM	Message	Q/A - RWIF
	Mar 25, 2022 at 9:49 AM	Message	Addendum 2
	Mar 25, 2022 at 10:16 AM	Internal Note	3/25 @10:00 am - Spoke with Andrew and he said they are still good for monday
	Mar 31, 2022 at 1:29 PM	Internal Note	3/31 @ 1:15 pm - Spoke with Andrew, cleared up the grounding question. They are trying to get us their updated pricing by tomorrow morning. They are waiting on a quote to come back
Sturgeon Electric Co.	Feb 28, 2022 at 8:17 PM	Bid Invite	Invitation to Bid
	Mar 4, 2022 at 9:41 AM	Message	Chandler RWIF- Addenda 1
	Mar 4, 2022 at 10:07 AM	Message	Chandler RWIF- Addenda 1
	Mar 4, 2022 at 10:21 AM	Message	Chandler RWIF- Addenda 1 REV 1

McCarthy Subcontractor Outreach

Chandler Reclaimed Water Interconnect Facility

Company/ Description	Timestamp	Type	Subject
	Mar 7, 2022 at 9:57 AM	Internal Note	Email Received on 3/7/22: After reviewing the Addenda and the proposed construction schedule, our management team met this morning to discuss the availability of craft manpower, supervision and preconstruction that would be needed to dedicated this proposal as well as construction of the project. We were also notified this morning on another WTP project that they would be issuing us a contract today for it. Taking all of this into consideration, as well as our current commitments in preconstruction and the backlog of contracted work that goes into 2023 - we will have to decline to bid the Chandler RWIF project as we would not want to commit to bidding it without having the proper Team to put on it. Please keep us in consideration for future projects.
Wilson Electric Services Corp.	Feb 28, 2022 at 8:17 PM	Bid Invite	Invitation to Bid
	Mar 4, 2022 at 9:41 AM	Message	Chandler RWIF- Addenda 1
	Mar 4, 2022 at 10:21 AM	Message	Chandler RWIF- Addenda 1 REV 1
	Mar 10, 2022 at 6:51 AM	Message	Q/A- RWIF
	Mar 10, 2022 at 3:14 PM	Internal Note	3/10- Called Tim @3.09pm stated he is bidding.
	Mar 16, 2022 at 9:53 AM	Message	Questions
	Mar 16, 2022 at 10:08 AM	Message	Updated Electrical Breakout
	Mar 17, 2022 at 9:51 AM	Message	P&ID Responsibility Matrix
	Mar 18, 2022 at 3:39 PM	Message	Q/A - RWIF
	Mar 21, 2022 at 3:19 PM	Message	Scope Meetings
	Mar 22, 2022 at 1:36 PM	Message	Scope Meeting
	Mar 22, 2022 at 1:46 PM	Internal Note	3/22 - Left Tim a voicemail @1:00 pm and sent a message in building connected. Will follow up tomorrow if I don't hear back.
	Mar 24, 2022 at 1:23 PM	Message	Scope Sheet
	Mar 25, 2022 at 9:38 AM	Message	Q/A - RWIF
	Mar 25, 2022 at 9:49 AM	Message	Addendum 2
	Mar 25, 2022 at 10:09 AM	Internal Note	3/25 - 10:08 am - Called Tim someone answered and then hung up. Trying him again in 30 mins.
	Mar 25, 2022 at 10:48 AM	Internal Note	3/25 - 10:45 am - Talked to Tim, he is checking his schedule for next wee and should be reaching out to set up a time for scope review
	Mar 31, 2022 at 1:33 PM	Internal Note	3/31 - 1:30pm - Spoke with Tim, they are still waiting on their programming number and we should have their new price by tomorrow

SECTION 11220

INLINE RAPID MIXERS

PART 1 - PART 1 - GENERAL

1.1 SUMMARY

A. CONTRACTOR shall provide all labor, materials, equipment, and incidentals as shown, specified, and required to furnish and install one new inline rapid mixer for mixing sodium hypochlorite and membrane permeate water.

B. Install one new inline rapid mixer on the common membrane permeate header, as shown on the Plans.

C. The CONTRACTOR shall have the responsibility to coordinate the installation of the equipment. Any revisions necessary shall be subject to the ENGINEER'S review and approval.

1.2 SECTION INCLUDES

A. Inline Rapid Mixer.

Section 05051 – Anchor Bolts, Toggle Bolts, and Concrete Inserts Not included.
Section 10400 – Equipment Identification Plates
- We are providing Manufacturer standard nameplates only.
Special nameplates (if required) are by others: (i.e. lamacoid type plates, warning signs (auto equipment may start at any time) etc.)
- Anchor Bolts and epoxy and anchorage calculations are not included.

1.3 RELATED SECTIONS

A. Section 01300, Submittals.

B. Section 01640, Materials and Equipment.

C. Section 01650, Starting of Systems.

D. Section 09900, Painting.

E. Section 16225, Electric Motors 250 Horsepower or Less.

1.4 REFERENCE STANDARDS

A. All applicable AGMA, ASTM, OSHA, AFBMA and NEMA Standards.

1.5 PRODUCT DELIVERY, STORAGE, AND HANDLING

A. Procedures for product delivery are specified in Division 1, General Requirements.

B. Run speed reducers with rust inhibitive oil before shipment.

C. Spray preservative oil on internal reducer housing surfaces before shipment.

D. Manufacturer shall not ship any equipment to the job site until the Shop Drawings are approved by the ENGINEER. Any non-approved equipment shall be removed from the job site by the CONTRACTOR.

1.6 SUBMITTALS

A. Shop Drawings: Submit for approval, in conformance with Section 01300, Submittals, the following:
   1. Letters of Certification of Compliance on materials, equipment, etc.
   2. Drawings showing fabrication, dimensions, capacity, weight and materials of construction, electrical diagrams, and installation piping.
   3. Field assembly instructions, assembly drawings and/or diagrams, detailed reference drawing lists, and lists of assembly details.
   4. Shop detail drawings showing individual sub-assemblies and fabricated pieces with material specifications and other applicable data.
   5. Installation instructions, operating and/or service manuals, and all other data pertinent to operating or servicing the complete apparatus. Preventative maintenance instructions and recommended frequency.
   6. Schematic and wiring diagrams of power, control, and piping systems. A detailed description of operation shall be included for each diagram to describe all modes of operation of the system indicated. Where the integrated system requires interlocking and control of other components in normal operation, these components shall be included in the description of operation.
   7. General bulletins or catalog cuts showing operating principles and fundamentals.
   8. A complete process description detailing all process parameters.
   9. Documentation that the manufacturer has produced, supplied, and placed into satisfactory service, equipment similar to that specified herein.
   10. Recommended list of spare parts and safety equipment, along with price and ordering information.
   11. Electrical equipment ratings and data sheets for all devices.

B. No equipment shall be shipped until the ENGINEER approves the Shop Drawings.

C. Shop Test Results: Submit results of routine factory motor tests.

D. Field Test Results: Submit a written report giving the results of the required field tests.

E. Manufacturer's Reports: Submit written report of the results of each visit by a manufacturer's serviceman, including purpose and time of visit, tasks performed, and results obtained.

F. Operation and Maintenance Manuals: Submit complete Operation and Maintenance Manuals in conformance with the Operation and Maintenance Manuals Section of Section 01300, Submittals.

G. A copy of this specification section, with addendum updates included, and all referenced and applicable sections, with addendum updates included, with each paragraph check-marked to indicate specification compliance or marked to indicate requested deviations from specification requirements. Check marks (✓) shall denote full compliance with a paragraph as a whole. If deviations from the specifications are indicated, and therefore requested by the CONTRACTOR, each deviation shall be underlined and denoted by a number in the margin to the right of the identified paragraph, referenced to a detailed written explanation of the reasons for requesting the deviation. The ENGINEER shall be the final authority for determining acceptability of requested deviations. The CONTRACTOR shall furnish equipment and/or services as specified if an exception and/or deviation is rejected. The remaining portions of the paragraph not underlined will signify compliance on the part of the CONTRACTOR with the specifications. Failure to include a copy of the marked-up specification sections, along with justification(s) for any requested deviations to the specification requirements, with the submittal shall be sufficient cause for rejection of the entire submittal with no further consideration.

H. The CONTRACTOR shall submit the preventive maintenance information package as part of the shop drawing submittal package to the ENGINEER for review and approval. **SHOP DRAWING SUBMITTAL PACKAGE WILL NOT BE APPROVED WITHOUT ACCEPTANCE OF PREVENTIVE MAINTENANCE INFORMATION.**

1.7 WARRANTY

A. The manufacturer shall warrant the units being supplied to the OWNER against defecting in workmanship and material for a period of twelve (12) months after start up and under normal use, operation, and service. The warranty shall cover parts and labor and shall be in printed form and apply to all similar units.

PART 2 - PART 2 - PRODUCTS

2.1 2.1 MANUFACTURERS

A. Acceptable Manufacturers:
   1. Hayward Gordon, HIM-100-24 Dynamic Inline Mixer.
   2. Or approved equal.

B. The naming of a manufacturer in this Specification is not an indication that the manufacturer's standard equipment is acceptable in lieu of the specified component features. Naming is only an indication that the manufacturer may have the capability of engineering and supplying a system as specified.

2.2 2.2 DESIGN CRITERIA

A. Job Conditions:
   1. Outdoor Installation.
   2. Mixed Liquid – 100% mixed Membrane Permeate Water containing Sodium Hypochlorite.
   3. Outdoor Temperature Range: 20° F to 122° F.
   4. Membrane Permeate Water Temperature Range: 45° F to 90° F.
   5. Continuous Mixing.
   6. Elevation: CL 1222.51' +/-.
   7. Pipe Diameter: 24-inches.
   8. Flow Rate: 10 MGD.
   9. System Pressure: 50 PSI.
   10. Mixing
   11. Outdoor Environment: Rain, sun, wind, dust.

B. Inline Rapid Mixer:
   1. Number of units: One.
   2. Number of impellers: Two.
   3. Impeller type: Two (2) opposed pitched blade turbine.
   4. Minimum motor size: 10 Hp.
   5. Impeller diameter, minimum: 13-inches.
   6. Impeller rotative speed: 450 rpm.

2.3 2.3 MATERIALS

A. Gear Reducer: Close-grained cast iron, stress relieved and reinforced.

B. Impeller Shaft: One piece, 316 Stainless Steel.

C. Impeller: 316 Stainless Steel.

D. Output Shaft: 316 Stainless Steel.

E. Output Coupling: 316 Stainless Steel.

F. Mixer Vessel: 316 Stainless Steel.

G. Flow Straightening Vanes: 316 Stainless Steel.

H. Ring Baffle: 316 Stainless Steel.

2.4 2.4 FABRICATION AND MANUFACTURE

A. Impeller:
   1. Type: Two (2) opposed pitched blade turbine, two per shaft.

2. Grind all edges smooth.
3. Statically balanced.
4. Use of stabilizing rings and fins: Unacceptable.
5. Bolted construction, connected to shaft with hook key.
6. Maximum stress in any impeller component at design conditions: 11,000 psi.

B. Speed Reducer:
   1. General:
      a. Designed, manufactured and rated per AGMA Standards.
      b. Maximum noise level: 85 dBA at 3 feet away from drive assembly.
      c. To ensure system responsibility the gear box shall be designed, manufactured, tested and warrantee by the mixer manufacture.
   2. Type:
      a. Solid oversized upper vertical parallel shaft design.
      b. Totally enclosed.
   3. Gears:
      a. Double or triple reduction.
      b. Helical and/or spiral bevel gearing.
      c. Worm gears not acceptable.
      d. AGMA No. 10 or better (AGMA 390.03).
   4. Minimum service factor: 2.0 based on nameplate Hp of
   5. Bearings:
      a. Ball or roller, anti-friction type.
      b. Oil or grease lubricated.
      c. Thrust bearings independent, designed to carry 125% of shaft and impeller loads.
      d. All bearings within drive including output shaft bearing: AFBMA B-10 minimum life of 100,000 hours at full motor nameplate horsepower and at design speed.
      e. Located within drive assembly.
   6. Gearbox Shaft:
      a. Maximum stress at max load: 8,000 psi.
   7. Case:
      a. Removable cover to provide access to gear reducer and all bearings without removing unit.
      b. Provide lifting lugs.
      c. Stress relieved and reinforced.

gearbox is commercially available unit manufactured by others, but otherwise warranteed by mixer manufacturer

Except for lubrication, gear reducer is not servicable with removal from mixer.

C. Impeller Shaft:
   1. Overhung design, no underwater steady bearing.
   2. Maximum stress at maximum operating load: 9,000 psi.
   3. One piece, output coupled to gearbox by rigid coupling.
   4. Minimum extension shaft diameter of 2.5".
   5. Shaft to operate below 65% of 1st critical speed.

6. Provide above surface access to coupling to permit coupling disconnect without dewatering basin or shaft removal.
7. Impeller shaft connection shall be sleeve type between gearbox and mixer shaft. Rating: 200% of full torque and 150% of axial load.

D. Shaft Seal:
1. The mixer will be sealed by a seal housing box fitted with John Crane type 32 dry running mechanical seal.
2. A vent port with ball valve is provided to assist with evacuating air from seal area at startup.

E. Motor:
1. Squirrel cage induction type, for continuous duty in a humid outdoor environment with full mill and chemical duty features. See Section 16225, Electric Motors 250 Horsepower or Less for motor specifications.
2. 460V, 3-phase, 60 Hz, energy efficient.
3. Class H insulation, Class B temperature rise of 50° C ambient at 1.0 service factor. Service factor: 1.15.
4. Lifting lugs.
5. Easily accessible, torsionally resilient flexible coupling between motor and speed reducer.
6. Provide OSHA approved coupling guards.
7. Synchronous speed: 1,800 rpm.

should read B temperature rise above 50 C ambient.

F. Mounting Arrangement:
1. Mount mixer with saddle type foot support for anchoring vessel to concrete equipment pad as shown on Drawings.
2. Provide lifting lug on both side of drive flange.
3. Mounted mixer to prevent any defection in piping system.

G. Baffles:
1. Provide and install flow straightening vanes and ring baffle for optimum mixing, as required by manufacturer's requirements.
2. Baffles to be supplied and mounted by the manufacturer.

H. Shop Painting:
1. All welds shall be thoroughly cleaned and ground smooth in preparation for painting. All iron and steel surfaces, except motors and speed reducers, shall be solvent cleaned in accordance with SSPC-SP1 before shop primer is applied.
2. All iron and steel surfaces, except motors, speed reducers, and stainless steel shall be given a shop coat of the manufacturer's standard rust inhibitive primer.

PART 3 - PART 3 - EXECUTION

3.1 3.1 FIELD QUALITY CONTROL

A. Manufacturer's Field Services
   1. Provide services of manufacturer's field representative. Field representative shall be a factory-trained person employed by the manufacturer, with significant experience with startup and training of equipment of this type.
   2. Field representative to:
      a. Be present during installation and alignment of equipment.
      b. Inspect and verify equipment properly installed per manufacturer's recommendations.
      c. Direct initial startup and instruct plant personnel for proper operation and maintenance of equipment.
      d. Preside at field test of equipment.
      e. Instruct the OWNER'S personnel in operation and maintenance of equipment. Instruction shall include theory, operational procedures for startup, shutdown, routine and abnormal operation, as well as preventive and unscheduled maintenance procedures, including assembly and disassembly of equipment.
      f. Submit a certification of proper installation and satisfactory performance.
      g. Perform testing, startup, and training.
         1) Provide field representative for a minimum of four hours, one trip for Pre-Operational Testing.
         2) Provide field representative for a minimum of eight hours, one trip for start-up testing.
         3) Provide field representative for a minimum of eight hours, one trip, for operations and maintenance training.
   3. Manufacturer shall include all costs for travel and living expenses for field representative in his bid price.

3.2 3.2 ADJUSTMENTS AND TESTING

A. Operating Checks:
   1. Pre-operation checks:
      a. Impeller shaft alignment.
      b. Speed reducer - bearing lubrication.
      c. Impeller rotation.
      d. Motor shaft - input shaft lubrication.
      e. System Pressure
   2. Post-operation checks:
      a. Check bearing temperature against manufacturer's recommendation.
      b. Check for motor overload.
      c. Check shaft alignment.
         1) Test impeller shaft by hand turn operation.

2) Deflection: Not to exceed 1/8-inch per 10 feet of length.

d. Check vibration:

1) Test gearbox unit for vibration when operated by motor.

2) Maximum allowable deflection: 5 mil anywhere on motor or speed reducer.

B. Start-Up Testing:

1. Water Test:

a. With pressurized pipe at normal operating condition, operate mixer for three hours.

b. Measure power consumption, shaft speed, and vibration every five minutes for the first hour, and once every half hour thereafter until completion of the test.

2. Testing:

a. Costs:

1) The OWNER will pay for energy costs associated with testing.

2) Supplier will pay for all other costs associated with testing and retesting.

b. Failure to perform:

1) Equipment not meeting specified performance requirements will not be accepted.

2) Supplier shall remove equipment, modify, reinstall, and retest as required to meet test requirements.

c. Test personnel and equipment:

1) Personnel: Qualified and familiar with operation of equipment furnished.

2) Equipment: Calibrated.

d. All tests shall be performed in the presence of the ENGINEER and the OWNER Representatives.

e. Schedule

1) Coordinate testing with the CONTRACTOR, the OWNER, and the ENGINEER.

++ END OF SECTION ++

SECTION 11285

HYDRAULIC GATES

PART 1 - GENERAL

1.1 SUMMARY

A. CONTRACTOR shall provide all labor, materials, equipment, and incidentals as shown, specified, and required to furnish and install stainless steel gates, and appurtenances.

B. Gate mountings shall be supplied by the gate manufacturer and all other appurtenances shall be provided by the CONTRACTOR.

1.2 SECTION INCLUDES

A. Heavy-duty fabricated stainless steel slide Gates.

Acknowledged

1.3 REFERENCES

A. American Society of Mechanical Engineers (ASME)
   1. Section IX - Boiler and Pressure Vessel Code - Welding and Brazing Qualifications.

B. American Water Works Association (AWWA)
   1. AWWA C 561 - Fabricated Stainless Steel Gates.

C. American Welding Society (AWS)
   1. D1.6 - Structural Welding Code-Stainless Steel.

D. American Society for Testing Materials (ASTM)
   1. A 276 - Stainless and Heat-Resisting Steel Bars and Shapes, Type 304 and Type 316.
   2. B 584 - Copper Alloy Sand Castings for General Application.
   3. D 1248 - Standard Specification for Polyurethane Plastics Extrusion Materials for Wire and Cable.
   4. D 2000 - Standard Classification for Rubber Products in Automotive Applications.
   5. D 4020 - Standard Specification for Ultra-High Molecular-Weight Polyethylene Molding and Extrusion Materials.

1.4 RELATED SECTIONS

A. Section 01300, Submittals.

B. Section 01640, Materials and Equipment.

C. Section 01650, Starting of Systems.

D. Section 03300, Cast-in-Place Concrete.

E. Section 03600, Grout.

Acknowledged

F. Section 09900, Painting (Specifications for surface preparation and shop priming required under Section 11285, Hydraulic Gates, are to be done in conformance with Section 09900, Painting).

G. Section 13447, Electric Motor Actuators.

H. Division 16, Electrical.

I. Division 17, Instrumentation.

1.5 QUALITY ASSURANCE

A. Manufacturer's Qualifications:
   1. Manufacturer shall have a minimum of five years of experience in the production of substantially similar equipment and shall show evidence of satisfactory operation in at least five installations.
   2. All gates shall be the product of one manufacturer.

B. Shop Tests:
   1. Test each gate fully assembled in the vertical position for proper seating.
   2. Fully open and close gate disc in its guide system to ensure that it operates freely.
   3. Operate and test floor stands, bench stands, and motor operators to ensure proper assembly and operation. Motor operators shall be tested by the operator manufacturer prior to shipment.

We Comply

1.6 SUBMITTALS

A. Descriptive Submittals shall be made in accordance with the Data Reference Symbols defined in Section 01300, Submittals.
   1. Shop Drawings:
      a. Letters of Certification of Compliance on materials, equipment, etc.
      b. Final Certified Drawings showing outline dimensions, foundation layout or mounting information, and other pertinent dimensions.
      c. Shop Detail Drawings showing individual sub-assemblies and fabricated pieces with material specifications and other applicable data.
      d. Schematic and wiring diagrams of power, control, and piping systems. A detailed description of operation shall be included for each diagram to

describe all modes of operation of the system indicated. Where the integrated system requires interlocking and control of other components in normal operation, these components shall be included in the description of operation.

e. General bulletins and catalog cuts describing complete apparatus, including operating principles and fundamentals.
f. Materials of construction of all components.
g. Renewal parts list with diagrammatic or cross-section drawings showing part identification. Material analysis or trades designation for each significant part is to be noted on parts lists or on a separate sheet.
h. Stuffing box sizes; packing sizes; specifications and arrangement; and mechanical seal details, specifications, etc., if furnished in equipment.
i. Deviations from the Contract Documents.

2. O&M Manuals:
   a. Final Certified Drawings showing outline dimensions, foundation layout or mounting information, and other pertinent dimensions.
   b. Shop Detail Drawings showing individual sub- assemblies and fabricated pieces with material specifications and other applicable data.
   c. Installation instructions, operating and/or service manuals, and all other data pertinent to operating or servicing the complete apparatus. Preventative maintenance instructions and recommended frequency.
   d. General bulletins and catalog cuts describing complete apparatus, including operating principles and fundamentals.
   e. Materials of construction of all components.
   f. Renewal parts list with diagrammatic or cross-section drawings showing part identification. Material analysis or trades designation for each significant part is to be noted on parts lists or on a separate sheet.
   g. Stuffing box sizes; packing sizes; specifications and arrangement; and mechanical seal details, specifications, etc., if furnished in equipment.
   h. Test reports, maintenance data and schedules, description of operation, and spare parts information.
   i. Furnish Operation and Maintenance Manuals in conformance with the requirements of Section 01300, Submittals.

We Comply

B. Field Test Results:
   1. Submit a written report giving the results of the field tests required.

C. Lubricant Specification: Furnish a lubricant specification for the type and grade necessary to meet the requirements of the equipment.

D. A copy of this specification section, with addendum updates included, and all referenced and applicable sections, with addendum updates included, with each paragraph check-marked to indicate specification compliance or marked to indicate requested deviations from specification requirements. Check marks (✓) shall denote full compliance with a paragraph as a whole. If deviations from the specifications are

indicated, and therefore requested by the CONTRACTOR, each deviation shall be underlined and denoted by a number in the margin to the right of the identified paragraph, referenced to a detailed written explanation of the reasons for requesting the deviation. The ENGINEER shall be the final authority for determining acceptability of requested deviations. The CONTRACTOR shall furnish equipment and/or services as specified if an exception and/or deviation is rejected. The remaining portions of the paragraph not underlined will signify compliance on the part of the CONTRACTOR with the specifications. Failure to include a copy of the marked-up specification sections, along with justification(s) for any requested deviations to the specification requirements, with the submittal shall be sufficient cause for rejection of the entire submittal with no further consideration.

E. The CONTRACTOR shall submit the preventive maintenance information package as part of the shop drawing submittal package to the ENGINEER for review and approval. **SHOP DRAWING SUBMITTAL PACKAGE WILL NOT BE APPROVED WITHOUT ACCEPTANCE OF PREVENTIVE MAINTENANCE INFORMATION.**

1.7 PRODUCT DELIVERY, STORAGE, AND HANDLING

A. Deliver materials to the site to insure uninterrupted progress of the Work.
   1. Deliver anchor bolts and anchorage devices which are to be embedded in cast-in-place concrete in ample time to maintain the construction schedule.

We Comply

B. Handle all gates and appurtenances properly, in accordance with manufacturer's recommendations. Gates which are distorted or otherwise damaged will not be acceptable. Protect all steam threads, bolt threads and ends from damage.

C. Store materials to permit easy access for inspection and identification.

D. Store all mechanical equipment in covered storage off the ground and prevent condensation.

1.8 GATE SCHEDULE

A. The Gate Schedule is included at the end of this Section. This schedule is provided for general information on specific gates. In the event of discrepancies between this schedule and the Plans and Specifications, the information on the Plans shall govern.

PART 2 - PRODUCTS

2.1 MANUFACTURERS

A. The gates shall be as manufactured by one of the following (Manufacturers listed in alphabetical order):
   a. Fontaine

b. Golden Harvest, Inc., Burlington, WA.
c. Waterman Industries
d. Whipps, Inc., Athol, MA
e. Or, Approved Equal.
f. The naming of a manufacturer in this Specification is not an indication that the manufacturer's standard equipment is acceptable in lieu of the specified component features. Naming is only an indication that the manufacturer may have the capability of engineering and supplying a system as specified.

2.2 MATERIALS

A. All materials used in the manufacturing of the gates shall be of the best quality used for the purpose of commercial production.

B. General: Design equipment to be suitable for the process and service conditions described below and in the Gate Schedule.
1. Design gates to safely withstand conditions listed in the Gate Schedule.
2. Gates shall be substantially watertight with leakage less than 0.5 gpm per foot of seating perimeter at design head.
3. Manual operators shall turn right to close, unless otherwise specified. Operators shall indicate the direction of operation.
4. Bolts, studs, cap screws, and adjusting screws shall be of ample section to withstand the force created by operation of the gate under a full head of water.
5. Downward opening gates shall be capable of being lowered to an elevation below the invert of the channel or opening.
6. Gates shall open to not less than 6-inches above the maximum water level in the channel in which they are installed.

We Comply

C. Materials of Construction for Gates:
1. Stainless Steel: For frame, slide, slide stiffeners, rail, yoke, pedestals, wall brackets, and wall thimbles ASTM A276, Type 316 stainless steel. All metal for gate and wall thimble parts shall have a minimum thickness of 1/4-inch.
2. Frame, top stiffener, vertical stiffener, center stiffener, seal landing, and seal retainer shall be made of stainless steel consistent with ASTM A240.
3. Bronze Casting: For operating nut, thrust nut, and lift nut, ASTM B584 Alloy 865.
4. All bolts, studs, cap screws, and adjusting screws shall be of Type 316 stainless steel.
5. Bolts and nuts shall have hexagon heads.
6. Gasket material and installation shall conform to manufacturer's recommendations.
7. Disc:
a. Stainless Steel: Fabricate the slide or disc of ASTM A276, Type 316L stainless steel plate reinforced with structural shapes attached by welding.

b. Provide reinforcing to limit deflection under full head to not more than 1/360 of the span, or 1/16-inch maximum at seal points, whichever is less.
c. Extend reinforcing ribs into the guides overlapping the seating surface of the guide.
d. Disc shall be sized to engage into the guides a minimum of 1-inch on each side.
e. Weld stem mounting guides to the disc.

8. Disc Guides:
   a. Stainless Steel: Guides shall be of Type 316L stainless steel formed and welded to create a one-piece type construction using formed plate. Gussets shall be provided to accommodate the load on the frame in unseating head conditions.
   b. Guides shall be designed for maximum rigidity in accordance with the latest revision of AWWA C561 to take the load developed at maximum design head and the thrust developed during gate operation, including the stall torque of the electric actuator, under maximum head.
   c. Guides shall extend beneath the opening a sufficient amount to completely support the disc in the fully open or closed position.
9. Stem:
   a. Operating stems shall be of Type 316 stainless steel and designed as specified below. Stems shall have a minimum diameter of 1-1/2 inches.
   b. Design stem to transmit in compression at least 2-1/2 times the rated output of the operating mechanism with an 80 lb effort on the crank or handwheel.
   c. Determine the critical buckling load using the Euler column formula, using C = 2. Where hydraulic cylinder lifts are used, the stem design force shall not be less than 1.25 times the output thrust of the hydraulic cylinder with a pressure equal to the maximum working pressure of the hydraulic fluid supply. Where electric motor driven lifts are used, the stem design force shall not be less than 1.25 times the output thrust of the unit in the stalled motor condition.
   d. Stems shall have a slenderness ratio (L/R) less than 200.
   e. Threaded portion of the stem shall have machined cut or machine rolled threads of the Acme type, having a surface roughness finish of 16 micro-inches or less. Join stems of more than one section by stainless steel couplings threaded and keyed, or bored and pinned, to the stems. All threaded and keyed couplings of the same size shall be interchangeable. Provide rising stems with an adjustable stop collar on the stem on manually operated gates.
   f. Connect the stem to the disc by means of a bolted connection with a minimum of two attachment bolts.
10. Yoke (For Self Contained Type Gates):
    a. Furnish tops of the extended guides with a yoke for mounting of the lifting device.

We Comply

b. Construct the yoke of structural shapes of sufficient strength to take the full thrust created by operating the gate under the maximum specified head.
c. Attach the yoke to the framework by bolting or welding so as to permit removal of the gate slide and stem.

11. Lower Seals:
    a. Mount a specially shaped resilient neoprene seal on the bottom of the disc or guide frame to provide flush-bottom closure for gates.
    b. Shape of the seal shall produce a seating surface having a minimum width of 3/4-inch, and the seal will extend beyond the seating surface of the gate frame.
    c. Vertical face of the seal shall be in contact with the seating surface of the guide to provide a proper seal at the corners.
12. Side and Upper Seals:
    a. Side and upper seals shall be self-adjusting seals with compression cord fabricated from ultra high molecular weight (UHMW) polyethylene or UHMW polymer. Weir gates to have the self-adjust seal on the bottom versus top for slide gates. UHMW bearing strips shall be mechanically retained to lock seat in place. Elastomeric seals such as J-Seals and Crown seals or adjust seal designs are not acceptable.

We Comply

2.3 APPURTENANCES

A. Stem Guides:
    1. Guides shall be adjustable in two directions and shall be spaced so that stems have a maximum unsupported length of 84-inches.
    2. Anchor bolts for stem guides shall be Type 316 stainless steel.

B. Anchor Bolts:
    1. Provide Type 316 stainless steel anchor bolts as required for stem guides, floorstands, and all equipment or appurtenances which must be secured to concrete walls or floors. Anchor bolts shall be of ample size and strength for the purpose intended, and shall be furnished by the manufacturer. Anchor bolts shall be hooked, and provided for direct embedment during placement of concrete. Anchor bolts shall conform to the requirements of Section 05051, Anchor Bolts, Toggle Bolts and Concrete Inserts.

We recommend adhesive anchors

C. Stem Cover:
    1. Furnish all stems with a clear polycarbonate or butyrate plastic pipe stem cover. Covers shall be furnished with a cast aluminum adaptor for mounting covers to floor stands. Stem covers shall be designed and furnished with gasketing and breathers to eliminate water intrusion into operators and condensation within the covers.
    2. Stem covers shall have with legible markings showing as a minimum the gate position at 1/4 open, 1/2 open, 3/4 open and full open.

We Comply

D. Electric Operators:
   1. Electric motor operators shall be furnished as shown on the Slide Gate Schedule, in accordance with the requirements of Section 13447, Electric Motor Actuators.

E. Identification: Identify each gate with a stainless steel manufacturer's nameplate stamped with the approved designation as shown in the Gate Schedule, below. Manufacturer's nameplate shall be permanently fastened to the gate at the factory.

2.4 SURFACE PREPARATION AND PAINTING

A. Clean, prime coat, and finish coat ferrous metal surfaces of equipment in the shop in accordance with the requirements of Section 01640, Materials and Equipment, and Section 09900, Painting.

B. Coat machined, polished and non-ferrous surfaces bearing surfaces and similar unpainted surfaces with corrosion prevention compound which shall be maintained during storage and until equipment begins operation.

We Comply

C. Surface preparation and painting shall conform to Section 09900, Painting.

D. Certify, in writing, that the shop primer and coating system conforms to the requirements of Section 09900, Painting.

2.5 SPECIAL TOOLS

A. Furnish two sets of any special tools required for normal operation and maintenance.

2.6 LUBRICANTS

A. Furnish Food grade oil and grease meeting NSF 61 for water applications as required for initial operation. Use products recommended by the manufacturer.

2.7 GATE SCHEDULE

A. Schedule 11285 is the Gate Schedule. Conform to type, size, operation and other data specified, unless otherwise approved by ENGINEER.

B. Provide all gates as shown on the Drawings and listed in the Gate Schedule.

PART 3 - EXECUTION

directed to Contractor

3.1 INSTALLATION

A. Gates shall be installed in accordance with manufacturer's recommendations.

B. Gates shall be installed at the respective location as shown on the Plans.

directed to Contractor

C. Gate stems shall be plumb and vertical. Each gate shall be adjusted for smooth and easy operation.

D. Brace guides and frames during placement of concrete.

E. Set anchor bolts in accord with approved manufacturers drawings.

F. Provide minimum of 1-inch of non-shrink grout below all floor stands and between gate frame and wall on wall mounted gates.

G. Adjust all parts and components as required to provide correct operation.

3.2 FIELD TESTS

We Comply

A. After CONTRACTOR and ENGINEER have mutually agreed that the equipment installation is complete and ready for continuous operation, CONTRACTOR and a qualified field service representative of the manufacturer shall conduct a functional field test and a leakage test of each gate in the presence of ENGINEER to demonstrate that each gate furnished will function correctly and that maximum permissible leakage is not exceeded.

1. Functional Tests:
   a. Each gate with appurtenances shall be field tested. Tests shall demonstrate to ENGINEER that each part and all parts together function in the manner intended. All necessary testing equipment and manpower shall be provided by CONTRACTOR at his expense. OWNER will furnish all power, and incidental material and labor required for the tests.
2. Leakage Tests:
   a. Maximum permissible leakage shall be in accordance with the requirements of Paragraph 2.2.B.2. Excess leakage shall be reduced to meet specified requirements by adjusting the gate or replacement will be required.
3. In the event that the manufacturer is unable to demonstrate to ENGINEER that his equipment meets the requirements of the tests, the deficient equipment will be rejected and CONTRACTOR shall adjust and/or modify and retest the equipment as often as necessary to meet the specified requirements. No separate payments shall be made for adjustments and/or modifications.

3.3 MANUFACTURER'S FIELD SERVICE

A. A factory employed and trained representative of the manufacturer shall visit the site and provide installation and start-up services, as specified in Section 01650, Starting of Systems. The factory employed representative shall make six visits to the site. The six visits will be split as needed between installation assistance and supervision, checking the completed installation and start-up of the system, and for training on the operation and maintenance of the gates. Trips to include:

1. Installation supervision: 1 trip, 1 day.
2. Dry wall installation inspection and operation: 1 trip, 4 days.

3. Wet wall functional and leakage testing: 1 trip, 4 days.
4. Training and remaining startup: 1 trip, ½ day.

B. Equipment Start-up: A factory employed representative of the manufacturer shall visit the site and provide installation and start-up services as specified in Section 01650, Starting of Systems.

We Comply

C. Training: A factory employed and trained representative of the manufacturer shall visit the site and provide operator training services, in addition to equipment start-up services, as specified in Section 01650, Starting of Systems. A minimum of one day of training and of training will be required.

D. All costs, including travel, lodging, meals, and incidentals, shall be considered as included in the CONTRACTOR'S lump sum bid price.

GATE SCHEDULE										
Equipment Number	Gate Location	Mounting Style / Frame Type / Material	Shape of Wall Opening / Top Seal (Y/N)	Invert (ft) / Operating Floor Elevation (ft)	Size (WxH, in)	Gate Opening Direction	Min Gate Travel (ft)	Seating / Unseating (ft)	Type of Closure	Operator / Operator Mounting Style
TBD	RAW WATER PUMP STATION INTAKE SLIDE GATE	WALL MOUNTED / NON-SELF CONTAINED / SST	ROUND / Y	1219.45 / 1230.50	24 x 24	UPWARD	2	6/6	STANDARD	ELECTRIC OPERATOR / FLOOR MOUNTED

++ END OF SECTION ++

Acknowledged

SECTION 11311

SUBMERSIBLE PUMPS

PART 1 - GENERAL

1.1 SUMMARY

A. CONTRACTOR shall furnish and install three new submersible non-clogging impeller pumps for the Raw Water Pump Station as specified herein and as shown on the Drawings. The pumps shall be complete and operational with motors, discharge elbow, guide bar, brackets, access frames, covers, alternator, and accessories as shown and specified. Anchor bolts are included in this Section.

1.2 RELATED SECTIONS

A. Section 01300, Submittals.

B. Section 01640, Materials and Equipment.

C. Section 01650, Starting of Systems.

D. Section 05500, Metal Fabrications.

E. Section 09900, Painting.

F. Section 11100, Motors.

G. Division 16, Electrical.

1.3 REFERENCES

A. Antifriction Bearing Manufacturers Association (AFBMA).

B. American National Standards Institute (ANSI).
   1. ASTM A48, gray iron castings.
   2. ASTM A276, stainless and heat resisting steel bars and shapes.

C. American Society for Testing and Materials (ASTM).

D. American National Standards Institute/Hydraulic Institute (ANSI/HI).
   1. 1.1-1.5, Centrifugal Pumps - Nomenclature, Definitions, Application and Operation.
   2. 1.6, Centrifugal Pump Tests.
   3. 9.1-9.5, Pumps - General Guidelines for Types, Definitions, Application and Sound Measurement.

E. National Electric Code (NEC).

F. Standards of National Electrical Manufacturers Association (NEMA).

G. Institute of Electrical and Electronic Engineers (IEEE).

H. Standards of American Water Works Association (AWWA).

1.4 GENERAL DESCRIPTION

A. Pumps shall be installed in the wet well as shown in the Drawings. Each pump shall be mounted on a discharge connection elbow and guide bar system to allow removal and installation of the pumps without entering the wet well.

B. The entire weight of the pump unit shall be guided by a minimum of two guide bars pressed tightly against the discharge connection elbow. No portion of the pump shall bear directly on the floor of the sump. The pump, with its appurtenances and guide bar system, shall be capable of continuous submergence under water without loss of water tight integrity to a depth of 60 feet.

C. Provide a permanently installed cast iron discharge connection elbow and base in the wet well, along with the discharge piping. The pump shall be automatically connected to the discharge connection elbow when lowered into place and shall be easily removed for inspection or service. Sealing of the pumping unit to the discharge connection elbow shall be accomplished by a simple linear downward motion of the pump.

D. Provide enlargers/reducers as necessary to ensure pump locations, pipe location, and pipe sizes are as shown on the Drawings. If enlargers/reducers affect pump locations, pipe locations, or pipe sizes, the CONTRACTOR shall notify the ENGINEER before construction of the pump station proceeds.

E. In order to centralize responsibility, it is required that all equipment and services provided under this Specification be furnished by a single supplier or manufacturer who shall assume full responsibility for the completeness of the system. CONTRACTOR shall guarantee and be the source of information on all equipment furnished regardless of the manufacturing source of that equipment.

1.5 SUBMITTALS

A. Descriptive submittals shall be made in accordance with the Data Reference Symbols defined in Section 01300, Submittals.
   1. Pumps: Shop Drawings:
      a. Letters of Certification of Compliance on materials, equipment, etc.
      b. Final Certified Drawings showing outline dimensions, foundation layout or mounting information, and other pertinent dimensions.

c. Field erection instructions, assembly drawings and/or diagrams, detailed reference drawing lists, lists of erection details, and list of spare parts supplied with equipment.
d. Shop Detail Drawings showing individual sub-assemblies and fabricated pieces with material specifications and other applicable data.
e. Installation instructions, operating and/or service manuals, and all other data pertinent to operating or servicing the complete apparatus. Preventative maintenance instructions and recommended frequency.
f. Schematic and wiring diagrams of power, control, and piping systems. A detailed description of operation shall be included for each diagram to describe all modes of operation of the system indicated. Where the integrated system requires interlocking and control of other components in normal operation, these components shall be included in the description of operation.
g. General bulletins and catalog cuts describing complete apparatus, including operating principles and fundamentals.
h. Service data sheets showing design performance, utility requirements, etc., as applicable to the specific duty for which the equipment is furnished.
i. Certified head and capacity curves for pumps. Impeller size furnished and maximum size available shall be noted on these data sheets.
j. Curves and/or data for overall range of operation from minimum to maximum capacity or load, showing capacity or load, utilities motive medium required, total or incremental differential head, and other pertinent information applicable to the equipment or its component assemblies.
k. Materials of construction of all components.
l. Renewal parts list with diagrammatic or cross-section drawings showing part identification. Material analysis or trades designation for each significant part is to be noted on parts lists or on a separate sheet.
m. Stuffing box sizes; packing sizes; specifications and arrangement; and mechanical seal details, specifications, etc., if furnished in equipment.
n. Bearing manufacturer's standard identification and/or interchangeable number for all anti-friction bearings in the equipment proper and its accessory items.

2. Pumps: O&M Manuals:
   a. Final Certified Drawings showing outline dimensions, foundation layout or mounting information, and other pertinent dimensions.
   b. Field erection instructions, assembly drawings and/or diagrams, detailed reference drawing lists, lists of erection details, and list of spare parts supplied with equipment.
   c. Shop Detail Drawings showing individual sub-assemblies and fabricated pieces with material specifications and other applicable data.
   d. Installation instructions, operating and/or service manuals, and all other data pertinent to operating or servicing the complete apparatus. Preventative maintenance instructions and recommended frequency.

e. Schematic and wiring diagrams of power, control, and piping systems. A detailed description of operation shall be included for each diagram to describe all modes of operation of the system indicated. Where the integrated system requires interlocking and control of other components in normal operation, these components shall be included in the description of operation.
f. General bulletins and catalog cuts describing complete apparatus, including operating principles and fundamentals.
g. Service data sheets showing design performance, utility requirements, etc., as applicable to the specific duty for which the equipment is furnished.
h. Certified head and capacity curves for pumps. Impeller size furnished and maximum size available shall be noted on these data sheets.
i. Curves and/or data for overall range of operation from minimum to maximum capacity or load, showing capacity or load, utilities motive medium required, total or incremental differential head, and other pertinent information applicable to the equipment or its component assemblies.
j. Materials of construction of all components.
k. Renewal parts list with diagrammatic or cross-section drawings showing part identification. Material analysis or trades designation for each significant part is to be noted on parts lists or on a separate sheet.
l. Stuffing box sizes; packing sizes; specifications and arrangement; and mechanical seal details, specifications, etc., if furnished in equipment.
m. Bearing manufacturer's standard identification and/or interchangeable number for all anti-friction bearings in the equipment proper and its accessory items.
n. Descriptive O&M's shall be made in accordance with Section 01730, Operation and Maintenance Data.

3. Impellers: Shop Drawings:
a. Letters of Certification of Compliance on materials, equipment, etc.
b. Final Certified Drawings showing outline dimensions, foundation layout or mounting information, and other pertinent dimensions.
c. Field erection instructions, assembly drawings and/or diagrams, detailed reference drawing lists, lists of erection details, and list of spare parts supplied with equipment.
d. Shop Detail Drawings showing individual sub- assemblies and fabricated pieces with material specifications and other applicable data.
e. Installation instructions, operating and/or service manuals, and all other data pertinent to operating or servicing the complete apparatus. Preventative maintenance instructions and recommended frequency.
f. Service data sheets showing design performance, utility requirements, etc., as applicable to the specific duty for which the equipment is furnished.
g. Certified head and capacity curves for pumps. Impeller size furnished and maximum size available shall be noted on these data sheets.

h. Curves and/or data for overall range of operation from minimum to maximum capacity or load, showing capacity or load, utilities motive medium required, total or incremental differential head, and other pertinent information applicable to the equipment or its component assemblies.
i. Materials of construction of all components.
j. Bearing manufacturer's standard identification and/or interchangeable number for all anti-friction bearings in the equipment proper and its accessory items.

4. Impellers: O&M Manuals:
   a. Final Certified Drawings showing outline dimensions, foundation layout or mounting information, and other pertinent dimensions.
   b. Field erection instructions, assembly drawings and/or diagrams, detailed reference drawing lists, lists of erection details, and list of spare parts supplied with equipment.
   c. Shop Detail Drawings showing individual sub- assemblies and fabricated pieces with material specifications and other applicable data.
   d. Installation instructions, operating and/or service manuals, and all other data pertinent to operating or servicing the complete apparatus. Preventative maintenance instructions and recommended frequency.
   e. Service data sheets showing design performance, utility requirements, etc., as applicable to the specific duty for which the equipment is furnished.
   f. Certified head and capacity curves for pumps. Impeller size furnished and maximum size available shall be noted on these data sheets.
   g. Curves and/or data for overall range of operation from minimum to maximum capacity or load, showing capacity or load, utilities motive medium required, total or incremental differential head, and other pertinent information applicable to the equipment or its component assemblies.
   h. Materials of construction of all components.
   i. Bearing manufacturer's standard identification and/or interchangeable number for all anti-friction bearings in the equipment proper and its accessory items.

5. A copy of this specification section, with addendum updates included, and all referenced and applicable sections, with addendum updates included, with each paragraph check-marked to indicate specification compliance or marked to indicate requested deviations from specification requirements. Check marks (✓) shall denote full compliance with a paragraph as a whole. If deviations from the specifications are indicated, and therefore requested by the CONTRACTOR, each deviation shall be underlined and denoted by a number in the margin to the right of the identified paragraph, referenced to a detailed written explanation of the reasons for requesting the deviation. The ENGINEER shall be the final authority for determining acceptability of requested deviations. The CONTRACTOR shall furnish equipment and/or services as specified if an exception and/or deviation is rejected. The remaining portions of the paragraph not underlined will signify compliance on the part of the CONTRACTOR with

the specifications. Failure to include a copy of the marked-up specification sections, along with justification(s) for any requested deviations to the specification requirements, with the submittal shall be sufficient cause for rejection of the entire submittal with no further consideration.

6. The CONTRACTOR shall submit the preventive maintenance information package as part of the shop drawing submittal package to the ENGINEER for review and approval. **SHOP DRAWING SUBMITTAL PACKAGE WILL NOT BE APPROVED WITHOUT ACCEPTANCE OF PREVENTIVE MAINTENANCE INFORMATION.**

1.6 WARRANTY

A. The pump manufacturer shall warrant the units being supplied to the OWNER against defecting in workmanship and material for a period of five years or 10,000 hours under normal use, operation, and service. The warranty shall cover parts and labor and shall be in printed form and apply to all similar units.

1.7 QUALITY ASSURANCE

A. Manufacturers regularly engaged in the manufacture of the submersible pump equipment as specified herein and who can demonstrate equipment of this specified design in actual service for not less than five years will be considered as acceptable manufacturers. All like items shall be furnished by one manufacturer to ensure uniformity and interchange ability of parts. Manufacturer shall guarantee all equipment furnished; however, this shall not be construed as relieving the CONTRACTOR from his responsibility for the proper installation and functioning of the Work.

B. Require pump manufacturer to furnish and coordinate pump, driver, drive, and pump components as specified and scheduled below and to provide written installation and check-out requirements.

C. Manufacturer shall have five installations of same size equipment in same application within the last five years in the State of Arizona. Manufacturer to submit installation information, including size, location, and a total of three operator contact names and operator phone numbers with the submittals.

D. Complete assemblies, including motor, cable, and all accessories, shall be listed and approved by the Nationally Recognized Testing Laboratories (NRTL).

E. Shop Tests:
   1. Pump casings shall be hydrostatically tested to twice the discharge head or 1-1/2 times the shutoff head, whichever is greater.
   2. Running Test: Pump assembly shall be operated from zero to maximum capacity as shown on the approved pump curve. Results of the test shall be shown in a plot of test curves showing head, flow, horsepower, efficiency, and

current. Readings shall be taken at a minimum of five evenly spaced capacity points including shut-off, design point and minimum head for which the pump is designed to operate.

3. Each test shall be witnessed by a Registered Professional Engineer, who may be an employee of the manufacturer. He shall sign and seal all copies of curves and shall certify that hydrostatic tests were performed. Tests shall be conducted in conformance with the methods described in Section A6 of AWWA E101.
4. Pumps shall not be shipped until the ENGINEER has approved the test reports.

PART 2 - PRODUCTS

2.1 MANUFACTURERS

A. ITT FLYGT.

~~B. KSB.~~

~~C. Sulzer.~~

D. Or, approved equal.

E. The naming of a manufacturer in this Specification is not an indication that the manufacturer's standard equipment is acceptable in lieu of the specified component features. Naming is only an indication that the manufacturer may have the capability of engineering and supplying a system as specified.

2.2 DESIGN CRITERIA

A. Equipment Schedule:

(The rest of this page intentionally left blank.)

<table>
<tr><th>DESCRIPTION</th><th>NUMBER OF PUMPS
VARIABLE FREQUENCY DRIVE</th><th>OPERATING CONDITIONS</th></tr>
<tr><td>Raw Water Pump Station</td><td>3</td><td>See system head curve for design rated points. The pumps specified shall be capable of pumping the required flow along the entire system head curve. One pump in operation shall operate at full speed at 4,000 gpm at a TDH 50 feet. Two pumps in parallel operation shall operate at full speed at 7,000 gpm at a TDH of 47 feet. In addition to the above, one pump in operation shall be capable of pumping 3,000 gpm to 4,000 gpm between a speed of 45 Hz and 60 Hz, respectively. Two pumps in parallel operation shall be capable of pumping 5,600 gpm to 7,000 gpm between 45 Hz and 60 Hz, respectively.
The pump shall operate at the following Rated Design Point:
<table>
<tr><td>Flow (gpm)</td><td>Total Dynamic Head (feet)</td></tr>
<tr><td>3473</td><td>47</td></tr>
</table>
The pump shall operate along a pump curve at the specified:
<table>
<tr><td>Flow (gpm)</td><td>Head (feet)</td></tr>
<tr><td>2,500</td><td>66</td></tr>
<tr><td>3,250</td><td>63</td></tr>
<tr><td>4,000</td><td>60</td></tr>
</table>
Minimum Overall Pump Efficiency At Rated Design Point 80%
Motor Efficiency – 91%
Pump Efficiency at Rated Design Point – 83%
Minimum Shutoff Head - 79ft
Maximum Motor HP - 60
Maximum Speed – 1,200 rpm
Voltage, Volts - 460
Power Phases - 3
Power Frequency, Hz - 60
Minimum Solids Size - 3-inches
Minimum Power Cable Length - 100 feet
Minimum Pump Discharge Size – 8-inches</td></tr>
</table>

2.3 SUBMERSIBLE PUMP COMPONENTS

A. Pumps:
   1. The pumps shall be heavy-duty, electrical, submersible, centrifugal Non-clogging impeller units designed for handling influent wastewater flow.
   2. Major pump components shall be cast iron, ASTM A48, Class 35B, with smooth surfaces devoid of blow holes and other irregularities. All exposed nuts and bolts shall be of AISI Type 316 stainless steel. All surfaces coming into contact with water, other than stainless steel, shall be protected by an approved high quality epoxy coating.
   3. All mating surfaces where watertight sealing is required shall be machined and fitted with nitrile or viton rubber O-rings. Fittings shall be such that sealing is accomplished by metal-to-metal contact between machined surfaces. This will result in controlled compression of rubber O-rings without the requirement of a specific torque limit.
   4. Rectangular cross sectioned gaskets requiring specific torque limits to achieve compression shall not be considered as adequate or equal.

B. Motor:
   1. The pump motor shall be squirrel cage, induction, shell-type design, housed in an air-filled, watertight chamber. The stator windings shall be insulated with moisture resistant Class H insulation rated for 180° C. The stator shall be insulated by the trickle impregnation method using Class H monomer-free polyester resin resulting in a winding fill factor of 95%. The stator shall be heat-shrink fitted into the cast iron stator housing. The use of multiple step dip and bake-type stator insulation process is not acceptable. The motor shall be designed for continuous duty handling pumped media of 40° C capable of sustaining a minimum of 15 starts per hour with a minimum service factor of 1.15. See Section 11100, Motors for Motor Specifications.
   2. Thermal sensors shall be used to monitor stator temperatures. The stator shall be equipped with a minimum of three thermal switches embedded in the end coils of the stator winding (one switch in each stator phase). These shall be used in conjunction with and supplemental to external motor overload protection and wired to the control panel.
   3. Provide a leakage and over temperature protection system which shall consist of leakage and over temperature sensors at the motor and control module which shall be remotely located.
   4. Control module shall be compatible with motor sensors.
   5. Submersible pumps shall have explosion proof motors.

C. Cable Entry:
   1. The cable entry water seal design shall preclude specific torque requirements to insure a watertight submersible seal. The cable entry shall be comprised of a single cylindrical elastomer grommet, flanked by stainless steel washers, all

having a close tolerance fit against the cable outside diameter and the entry inside diameter. The cable entry junction chamber and motor shall be separated by a stator lead sealing gland or terminal board, which shall isolate the motor interior from foreign material gaining access through the pump top. Epoxies, silicones, or other secondary sealing systems shall not be considered acceptable.

D. Junction Chamber:
   1. The junction chamber, containing the terminal board, shall be sealed from the motor by elastomer compression seal (O-ring) and be field replaceable. Connection between the cable conductors and stator leads shall be made with threaded compressed type binding post permanently affixed to a terminal board and, thus, perfectly leak proof.

E. Shaft and Seals:
   1. Pump and motor shaft shall be the same unit. The pump shaft is an extension of the motor shaft. Couplings shall be acceptable. The pump shaft shall be completely isolated from the pumped liquid. The pump shafts for the pumps shall be of carbon steel ASTM A572, Grade 50, or Type 420 stainless steel.
   2. Each pump shall be provided with a tandem mechanical shaft seal system consisting of two totally independent seal assemblies. The seals shall operate in a lubricant reservoir that hydrodynamically lubricates the lapped seal faces at a constant rate. The lower, primary seal unit, located between the pump and the lubricant chamber, shall contain one stationary and one positively driven rotating Tungsten Carbide ring. The upper, secondary seal unit, located between the lubricant chamber and the motor housing, shall contain one stationary Tungsten Carbide seal ring and one positively driven rotating Tungsten Carbide seal ring.
   3. Each interface shall be held in contact by its own spring system. The seals shall require neither maintenance nor adjustment, but shall be easily inspected and replaceable. The following seal types shall not be considered acceptable (not equal to the dual independent seal specified): shaft seals without positively driven rotating members, or conventional double mechanical seals containing either a common single or double spring acting between the upper and lower units. Cartridge seals shall not be acceptable.
   4. Each pump shall be provided with an oil chamber for the shaft sealing system. The seal oil shall be FDA approved and non-toxic. Seal lubrication shall require an oil chamber capacity no greater than 16 pints. The drain and inspection plug, with positive anti-leak seal, shall be easily accessible from the outside.

F. Bearings:
   1. The pump shaft shall rotate on two-permanently lubricated bearings. Motor bearings shall be permanently greased lubricated. The upper bearing shall be a single roller bearing. The lower bearing shall be a two row angular contact bearing to compensate for axial thrust and radial forces. The bearings shall be rated for a 100,000 hours B-10 life.

FLYGT PUMPS STANDARD IMPELLER MATERIAL IS HARD IRON ASTM A-532 (ALLOY IIIA) 25% CHROME CAST IRON WHICH EXCEED THIS SPECIFICATION.

G. Impellers:
   1. Impellers shall be of gray cast iron, ASTM A48, Class 35B, dynamically balanced, double shrouded, non-clogging impeller having a long thrulet without acute turns. The impeller shall be capable of untreated surface water and fibrous materials. The fit between the impeller and the shaft shall be a sliding fit with one key.
   2. The volute shall be of a single piece, non-concentric design and shall have smooth fluid passages large enough at all points and capable of passing the diameter solids listed in the pump performance tables.

THE FLYGT PUMP SPECIFIED DOES NOT HAVE THIS TYPE OF WEAR RING SYSTEM

H. Wearing Rings:
   1. A wear ring system shall be installed to provide efficient volute and impeller. The wear ring system shall consist made of Type 420 stainless steel with a minimum Brinell 450 when tested in accordance with ASTM E10, encased in Nitrile rubber. The wear ring system shall be fitted to the volute inlet. Pumps shall also have a stainless steel impeller wear ring heat-shrink fitted onto the suction inlet of the impeller.

WE ARE PROVIDING 3" SCH 40, 316SS GUIDE RAIL

I. Guide System:
   1. Pumps shall use a guide bar system; guide cables are not acceptable. Guide bars, lifting cable, and guide rail supports shall be supplied by the pump manufacturer and be Type 316 stainless steel. The guide rail supports shall be placed at 8 foot maximum intervals, less as required to provide support. The system shall allow the pump to be automatically connected to the discharge connection when lowered into place and shall be easily removed for inspection or service. Sealing of the pumping unit to the discharge connection shall be accomplished by a linear downward motion of the pump to a metal-to-metal interface or to a profile gasket seal.
   2. The guide system shall include a pump lifting device. The pump lifting device shall slide along the guiderails without need for a downward force. The lifting device shall have a lifting eye which will accommodate a typical monorail or davit crane hook. The lifting device shall engage the pump lifting eye automatically upon contact. The lifting device shall accommodate pumps weighing up to 10,000 lbs. The lifting device will not increase pump height by more than 24 inches.

NOT SURE WHAT THE ENGINEER IS TALKING ABOUT HERE. SOUNDS LIKE FLYGT'S DEEP LIFT LIFTING SYSTEM, WE ARE PROVIDING 316SS LIFTING CHAIN AND SHACKLES.

J. Submersible Cable:
   1. Provide power and control cable from junction box to each pump suitable for submersible applications and indicate same by a code or legend permanently embossed on the cable.
   2. The instrument and power cables shall be submersible to the same water depth as the motor casing, type SPC with Chloroprene jacket, insulated for 90° C, non-wicking fillers, and at a length to suit surface junction box as indicated on the Drawings.

3. Size cable in accordance with applicable NEC requirements.
4. Cable shall be listed by a recognizable testing agency or laboratory.
5. Cable shall be covered in a protective PVC cover. PVC cable cover shall be ozone resistant. CONTRACTOR shall coordinate cable cover with the Odor

BY OTHERS

K. Controls:
1. Provide for control of the system in accordance with Section 17454, Control Descriptions. The CONTRACTOR shall be responsible for control panels as shown on the Drawings.

WE ARE PROVIDING ONE BASIC REPAIR KIT WHICH INCLUDES SEALS, BEARING AND O-RINGS

2.4 SPARE PARTS

A. Deliver one set for every furnished pump type and size needed to assemble and disassemble pump system.

B. Total spare parts to be supplied include the following:
1. ~~One set of wear rings.~~
2. One set of gaskets.
3. One set of bearings.
4. One set of mechanical seals.

WE ARE PROVIDING FLYGT'S STANDARD COATING SYSTEM

2.5 PUMP SHOP PAINTING

A. The manufacturer shall paint the pumps as follows:
1. CONTRACTOR shall provide finished coat per Section 09900, Painting. Final color selection shall be approved by ENGINEER prior to application.
2. Pumps, motors, drives, frames, baseplates, appurtenances, etc., shall receive shop primer and shop finish coating conforming to the requirements of Section 09900, Painting. If any damage to the paint system occurs, the equipment shall be repainted as directed by the ENGINEER.
3. Surface preparation and painting shall conform to the requirements of Section 09900, Painting.
4. All gears, bearing surfaces, machined surfaces and other surfaces which are to remain unpainted shall receive a heavy application of grease or other rust-resistant coating. This coating shall be maintained during storage and until the equipment is placed into operation.
5. Certify, in writing, that the shop primer and shop finish coating system conforms to the requirements of Section 09900, Painting.

BY CONTRACTOR

PART 3 - EXECUTION

3.1 INSTALLATION

A. The pumps and accessories shall be installed in accordance with the manufacturer's recommendations.

B. Make adjustments required to place system in proper operating condition. Field test and calibrate the equipment to assure that the system operates in accordance with these Specifications and to the satisfaction of the ENGINEER.

C. After completion of installation, the system shall be completely tested to ensure compliance with the operating requirements as specified, indicated on the Drawings and in accordance with Section 01752, Equipment and System Startup and Performance Testing.

3.2 MANUFACTURERS' FIELD SERVICE

A. Equipment Start-up: A factory employed representative of the manufacturer shall visit the site and provide installation and start-up services as specified in Section 01650, Starting of Systems.

B. A factory-trained representative shall be provided for installation supervision, start-up and test services and operation and maintenance personnel training services. The representative shall make a minimum of 3 visits, minimum 8hours on-site for each visit, to the site. The first visit shall be for assistance in the installation of equipment. The second visit shall be for checking the completed installation and start-up of the system. The third visit shall be as described under Section 01821, Instruction of Operations and Maintenance Personnel. Manufacturer's representative shall test operate the system in the presence of the ENGINEER and verify that the pumps conform to requirements. Representative shall revisit the job site as often as necessary until all trouble is corrected and the installation is entirely satisfactory.

C. Training: A factory employed representative of the manufacturer shall visit the site and provide operator training services, in addition to equipment start-up services, as specified in Section 01650, Starting of Systems.

++ END OF SECTION ++

Footer information below states this is Nov 21 / 60% Submittal edition of Section 11320. The footer information is not correct: This is DRAFT 90% Submittal.

SELF-CLEANING STRAINERS

See R.P. Adams Exceptions [EX] below:

PART 1 - GENERAL

1.1 SUMMARY

A. CONTRACTOR shall provide all labor, materials, equipment, and incidentals as shown, specified, and required to furnish and install three in-line, automatic, self-cleaning strainers. The self-cleaning strainers shall remove solids from the process water prior to membrane filtration.

B. The CONTRACTOR shall have the responsibility to coordinate the installation of the equipment. Any revisions necessary shall be subject to the ENGINEER'S review and approval.

1.2 REFERENCES

A. The following is a list of standards which may be referenced in this Section:
1. American Institute of Steel Construction (AICS).
2. American Iron and Steel Institute (AISI).
3. American National Standard Institute (ANSI).
4. American Society of Civil Engineers (ASCE).
5. American Society of Mechanical Engineers (ASME).
6. American Society of Testing Materials (ASTM).
7. American Welding Society (AWS).
8. International Building Code (IBC).
9. International Electric Code (IEC).
10. Institute of Electrical and Electronics Engineers (IEEE).
11. National Electric Code (NEC).
12. National Electric Manufacturer's Association (NEMA).
13. Underwriters Laboratory (UL and cUL).

1.3 RELATED SECTIONS

A. Section 01300, Submittals.

B. Section 01640, Materials and Equipment.

C. Section 01650, Starting of Systems.

D. Section 11295, Hydraulic Valves

E. Division 16, Electrical.

F. Division 17, Instrumentation.

1.4 QUALITY ASSURANCE

A. Manufacturer's Qualifications:
   1. Manufacturer shall have a minimum of five years of experience in the production of substantially similar equipment and shall show evidence of satisfactory operation in at least five installations.
   2. All self-cleaning strainers shall be the product of one manufacturer.

B. Shop Tests:
   Strainer Tests:

   a. Hydrostatic test to 1-1/2 times the working pressure.

EX b. Test for pressure drop at maximum flow with clean media.

EX c. Each test shall be witnessed by a Registered Professional Engineer who may be an employee of the manufacturer. The Professional Engineer shall seal and sign all test reports. Engineer's State of registration, registration number and name on the seal shall be legible.

2. Motor Tests:

a. Perform a routine test on each motor at the manufacturer's factory. The test shall consist of: Running Light Current; Locked Rotor Current; Winding Resistance; High Potential; and Bearing Inspection.

1. Unit Responsibility: Assign Unit Responsibility as specified in Section 01600, General Equipment Provisions, to the manufacturer or supplier for the equipment specified in this Section. A Certificate of Unit Responsibility shall be provided.

1.5 SUBMITTALS

A. Descriptive Submittals shall be made in accordance with the Data Reference Symbols defined in Section 01300, Submittals.
   1. Strainer Shop Drawings:
      a. Letters of Certification of Compliance on materials, equipment, etc.
      b. Final Certified Drawings showing outline dimensions, foundation layout or mounting information, and other pertinent dimensions.
EX   c. Shop Detail Drawings showing individual sub-assemblies and fabricated pieces with material specifications and other applicable data.
      d. Schematic and wiring diagrams of power, control, and piping systems. A detailed description of operation shall be included for each diagram to describe all modes of operation of the system indicated. Where the integrated system requires interlocking and control of other components in

normal operation, these components shall be included in the description of operation.

e. General bulletins and catalog cuts describing complete apparatus, including operating principles and fundamentals.
f. Materials of construction of all components.
g. Renewal parts list with diagrammatic or cross-section drawings showing part identification. Material analysis or trades designation for each significant part is to be noted on parts lists or on a separate sheet.
h. Stuffing box sizes; packing sizes; specifications and arrangement; and mechanical seal details, specifications, etc., if furnished in equipment.
i. Deviations from the Contract Documents.

2. Strainer O&M Manuals:
   a. Final Certified Drawings showing outline dimensions, foundation layout or mounting information, and other pertinent dimensions.
   b. Shop Detail Drawings showing individual sub- assemblies and fabricated pieces with material specifications and other applicable data.
   c. Installation instructions, operating and/or service manuals, and all other data pertinent to operating or servicing the complete apparatus. Preventative maintenance instructions and recommended frequency.
   d. General bulletins and catalog cuts describing complete apparatus, including operating principles and fundamentals.
   e. Materials of construction of all components.
   f. Renewal parts list with diagrammatic or cross-section drawings showing part identification. Material analysis or trades designation for each significant part is to be noted on parts lists or on a separate sheet.
   g. Stuffing box sizes; packing sizes; specifications and arrangement; and mechanical seal details, specifications, etc., if furnished in equipment.
   h. Test reports, maintenance data and schedules, description of operation, and spare parts information.
   i. Furnish Operation and Maintenance Manuals in conformance with the requirements of Section 01300, Submittals.

B. Field Test Results:
   1. Submit a written report giving the results of the field tests required.

C. Lubricant Specification: Furnish a lubricant specification for the type and grade necessary to meet the requirements of the equipment.

D. A copy of this specification section, with addendum updates included, and all referenced and applicable sections, with addendum updates included, with each paragraph check-marked to indicate specification compliance or marked to indicate requested deviations from specification requirements. Check marks (✓) shall denote full compliance with a paragraph as a whole. If deviations from the specifications are indicated, and therefore requested by the CONTRACTOR, each deviation shall be underlined and denoted by a number in the margin to the right of the identified

paragraph, referenced to a detailed written explanation of the reasons for requesting the deviation. The ENGINEER shall be the final authority for determining acceptability of requested deviations. The CONTRACTOR shall furnish equipment and/or services as specified if an exception and/or deviation is rejected. The remaining portions of the paragraph not underlined will signify compliance on the part of the CONTRACTOR with the specifications. Failure to include a copy of the marked-up specification sections, along with justification(s) for any requested deviations to the specification requirements, with the submittal shall be sufficient cause for rejection of the entire submittal with no further consideration.

E. The CONTRACTOR shall submit the preventive maintenance information package as part of the shop drawing submittal package to the ENGINEER for review and approval. **SHOP DRAWING SUBMITTAL PACKAGE WILL NOT BE APPROVED WITHOUT ACCEPTANCE OF PREVENTIVE MAINTENANCE INFORMATION.**

1.6 PRODUCT DELIVERY, STORAGE, AND HANDLING

A. Factory assemble and test self-cleaning strainer system at point of manufacturer.

B. Manufacturer shall fabricate and deliver materials to the job site in conformance with the CONTRACTOR'S construction schedule to minimize handling and on-site storage of equipment.

C. Store materials to permit easy access for inspection and identification.

D. Store all mechanical equipment in covered storage off the ground and prevent condensation.

PART 2 - PRODUCTS

2.1 MANUFACTURERS

A. The strainers shall be as manufactured by one of the following (Manufacturers listed in alphabetical order):
   1. Amiad Water Systems
   2. R.P. Adams
   3. S.P. Kinney
   4. Or, Approved Equal.
   5. The naming of a manufacturer in this Specification is not an indication that the manufacturer's standard equipment is acceptable in lieu of the specified component features. Naming is only an indication that the manufacturer may have the capability of engineering and supplying a system as specified.

2.2 DESIGN CRITERIA

A. Self-Cleaning Strainer
   1. Number of Self-Cleaning Strainers: 3 (2 duty, 1 standby)
   2. Flow Rate, per Strainer: 5 MGD
   3. Working Pressure, Minimum: 18 psi
   4. Design Pressure, Maximum: 150 psi
   5. Desired Solid Removal: 500 microns
   6. Inlet/Outlet Diameter: 16 inches

B. Self-Cleaning Strainer Motor: As specified in Section 16225, Electric Motors 250 Horsepower or Less, except as otherwise specified or supplemented below:
   1. Motor Power Supply: 480 volts, 3 phase, 60 hertz.
   2. Motor Horsepower, Minimum: 0.5.
   3. Motor Speed, Maximum: 1,800 rpm.
   4. Motor Enclosure: TEFC.
   5. Motor Service Factor: 1.15 at altitude.

2.3 MATERIALS

A. Strainer Unit
   1. Body and drum assembly shall be carbon steel or cast iron.
   2. Strainer unit shall be an automatic, self-cleaning type.
   3. Openings in the straining element shall be 500 micrometers.
   4. Straining element shall be perforated or punched hole stainless steel. Wedge wire shall not be accepted.
   5. Strainer element shall be 316L stainless steel.
   6. Inlet and outlet flange connections shall be 16 inches in diameter with drilling to conform to 150 lb ANSI.
   7. Strainer unit shall have a maximum operating pressure of 150 psi and a minimum design water temperature of 20°C.

B. Backwash Mechanism
   1. Strainer unit shall be equipped with a backwash mechanism that facilitates backwashing of the strainer element surface while maintaining forward flow through the strainer unit.
   2. Backwash system of the strainer unit shall include a hydraulic valve in order to control the backwash waste discharge containing the suspended solids removed from the straining element during backwash.
   3. Backwashing: Strainer shall operate under a positive pipeline pressure on the discharge side or downstream from the pump. Pipeline pressure and water shall efficiently backwash strainer media. A valve on the backwash discharge pipe shall control pressure drop and amount of water wasted in backflushing.
   4. Backwashing: Strainer shall operate under suction condition on the intake or upstream side of the pump. Backwash water from ~~pump~~ discharge shall be piped

assist pump

drain

and valved to the ~~strainer~~. Backwash water discharge pipe shall also be valved to maintain the required pressure drop and flow across the filter media.

C. Backwash Assist Pump

1. Motors:

a. Motors shall conform to the requirements of Section 11000, Electric Motors.

EX

b. Motors shall be a totally enclosed fan cooled motor ~~with Class H~~ insulation, with a maximum speed of 3,450 rpm.

c. Motors shall be suitable for operation on 480 volt, 3 phase, 60 Hz power.

d. Motors shall be of adequate size so that there is no overload on the motor above rated manufacturer's nameplate horsepower under normal conditions of service, but not more than 15 horsepower.

e. Motors shall have a 1.15 service factor, and shall comply with the latest ANSI, NEMA, and IEEE Standards as a minimum.

f. Locked rotor current shall be as specified in NEMA standards.

g. Motors thrust bearings shall be adequate to carry continuous thrust loads under all conditions of service, and shall have a minimum B-10 life of 100,000 hours.

h. Motors shall have a stainless steel manufacturer's nameplate which shall provide the following: type, frame, insulation, class, HP, full load current, RPM, centigrade degree rise, manufacturer's name and serial number model, voltage, locked rotor KVA code, bearing numbers and a connection diagram.

i. Motor terminal boxes shall be oversized to provide adequate space for connections and shall be constructed of cast iron or fabricated steel, neoprene gasketed and bolted. The motor leads shall be permanently marked in agreement with the connection diagram.

D. Inspection Port

1. An inspection port shall be provided in the side of the strainer unit to permit visual inspection and maintenance of the strainer element and to allow for removal of any oversize solids which may have entered into the strainer unit.
2. The cover plate of the inspection port shall be easily removable.

E. Anchor Bolts

1. Anchor bolts shall conform to the requirements of Section 05051, Anchor Bolts, Toggle Bolts and Concrete Inserts.

F. Strainer Motor

EX

1. Motor shall be TEFC premium efficiency, ~~Class H insulation.~~
2. See Section 16225, Electric Motors 250 Horsepower or Less, for motor specifications.

G. Instrumentation

1. Provide the following field instrumentation components in accordance with the requirements of Division 17.
    a. Differential Pressure Switch
        1) A differential pressure switch shall be factory connected to the filter inlet and outlet piping to initiate the backwash cycle whenever a differential pressure across the filter exceeds a preset value.
    b. Timers (integrated into the PLC)
        1) Backwash initiation timer
        2) Backwash duration timer
    c. Pressure Gauges

H. Control System
1. Provide control panels, instruments, and instrumentation and control components in accordance with Division 16 and 17.
2. Control system shall be provided for the functionality described in Specification Section 17454.

I. Identification
1. Identify each self-cleaning strainer with a stainless steel manufacturer's nameplate stamped with the approved designation as shown in Section 1800, Equipment Schedule.

J. Spare Parts
1. Procedures: See Section 01750, Spare Parts and Maintenance Materials.
2. Provide a "standard" spare parts list, including prices for all replaceable parts associated with the self-cleaning strainers, including the following at a minimum:
    a. One spare set of expendable material such as gaskets, seals, and packing.
    b. Two sets of new and unused special tools required for installation, operation, and maintenance.
    c. ~~One strainer screen repair kit for each self-cleaning strainer~~ Repair kit is NA. Supply spare set of tubes? EX
    d. Reagents/chemicals, calibration sets, and spare parts as specified for individual equipment items or instruments.
    e. Spare parts for instruments, PLC hardware and control devices as specified in Divisions 16 and 17.
3. Provide recommendations for spare parts and materials for the first 12 months of facility specific system operation.

2.4 SHOP PRIMING AND FINISHING

A. Prepare and shop paint surfaces as specified in Sections 09900, Painting.

PART 3 - EXECUTION

3.1 INSTALLATION

A. Install self-cleaning strainers in accordance with the manufacturer's recommended methods.

3.2 FIELD TESTS

A. After CONTRACTOR and ENGINEER have mutually agreed that the equipment installation is complete and ready for continuous operation, CONTRACTOR and a qualified field service representative of the manufacturer shall conduct a functional field test and a leakage test of each strainer in the presence of ENGINEER to demonstrate that each strainer furnished will function correctly and that maximum permissible leakage is not exceeded.
   1. Functional Tests:
      a. Each strainer with appurtenances shall be field tested. Tests shall demonstrate to ENGINEER that each part and all parts together function in the manner intended. All necessary testing equipment and manpower shall be provided by CONTRACTOR at his expense. OWNER will furnish all power, and incidental material and labor required for the tests.
   2. In the event that the manufacturer is unable to demonstrate to ENGINEER that his equipment meets the requirements of the tests, the deficient equipment will be rejected and CONTRACTOR shall adjust and/or modify and retest the equipment as often as necessary to meet the specified requirements. No separate payments shall be made for adjustments and/or modifications.

3.3 MANUFACTURER'S FIELD SERVICE

A. Equipment Start-up: A factory employed representative of the manufacturer shall visit the site and provide installation and start-up services as specified in Section 01650, Starting of Systems.

Training: A factory employed and trained representative of the manufacturer shall visit the site and provide operator training services, in addition to equipment start-up services, as specified in Section 01650, Starting of Systems. A minimum of one day of training will be required.

A factory-trained representative shall be provided for installation supervision, start-up and test services and operation and maintenance personnel training services. The representative shall make a minimum of 3 visits, minimum 8 hours on-site for each visit, to the site. The first visit shall be for assistance in the installation of equipment. The second visit shall be for checking the completed installation and start-up of the system. The third visit shall be as described under Section 01821, Instruction of Operations and Maintenance Personnel. Manufacturer's representative shall test operate the system in the presence of the ENGINEER and verify that the equipment conforms to the requirements.

Representative shall revisit the job site as often as necessary until all deficiencies have been corrected and the installation is entirely satisfactory.

B. All costs, including travel, lodging, meals, and incidentals, shall be considered as included in the CONTRACTOR'S lump sum bid price.

++ END OF SECTION ++

SECTION 11715

CHEMICAL METERING PUMPS AND APPURTENANCES

PART 1 - GENERAL

1.1 SUMMARY

A. Furnish and install chemical metering pumps and appurtenances. The chemical metering pumps and appurtenances shall be located at the MFS Chemical Facility, the ACH Facility and the Modified Bulk Sodium Hypochlorite Facility as shown on the Drawings and as specified herein for the conveyance of Sodium hypochlorite (NaOCl – 12.5%), Citric acid (50%), Sulfuric Acid (H_2SO_4 – 50%), Sodium bisulfite ($NaHSO_3$ – 38%), Sodium hydroxide (NaOH – 50%), Aluminum chlorohydrate (ACH – 40%) to the following systems:
   1. Self-Cleaning Strainers.
   2. Membrane Facility.

1.2 SECTION INCLUDES

A. Chemical metering pumps.

B. Pulsation dampeners.

C. Degassing valve.

D. Pressure relief valve.

E. Pressure gauges/diaphragm seals.

F. Diaphragm valves.

G. Wye strainers.

H. PVC spray hose.

Not Included. I. Pre-cast polymer concrete trench.

J. Flexible couplings.

Not Included. K. Dry disconnect coupling.

L. Control panel.

M. Pipe Supports.

1.3 RELATED SECTIONS

A. Section 01300, Submittals.

B. Section 01640, Materials and Equipment.

C. Division 13, Special Construction.

D. Section 15065, Thermoplastic Pipe and Accessories.

E. Division 16, Electrical.

1.4 REFERENCE STANDARDS

A. Comply with applicable provisions and recommendations of the following, except as otherwise shown or specified:
   1. Standards of National Electrical Manufacturer's Association.
   2. Recommendations of the Chlorine Institute, Inc.
   3. Occupational Safety and Health Act.
   4. Joint Industrial Council.
   5. Instrument Society of America.
   6. American Water Works Association.
   7. National Fire Protection Association.

Parts only.

1.5 WARRANTY

A. The manufacturer shall warrant the units being supplied to the OWNER against defects in workmanship and material for a period of one year under normal use, operation, and service. The warranty shall cover parts and labor and shall be in printed form and apply to all similar units.

B. Any service require for the actuator that fall within the parameter of the warranty conditions shall be provided by the manufacturer or its certified representative to provide the service required.

1.6 SUBMITTALS

A. The CONTRACTOR shall provide descriptive submittals in accordance with the Data Reference Symbols defined in Section 01300, Submittals. CONTRACTOR shall submit all equipments and appurtenances specified for in this Section as follows:
   1. Metering Pumps: Shop Drawings:
      a. Letters of Certification of Compliance on materials, equipment, etc.
      b. Final Certified Drawings showing outline dimensions, foundation layout or mounting information, and other pertinent dimensions.

c. Field erection instructions, assembly drawings and/or diagrams, detailed reference drawing lists, lists of erection details, and list of spare parts supplied with equipment.
d. Shop Detail Drawings showing individual sub- assemblies and fabricated pieces with material specifications and other applicable data.
e. Installation instructions, operating and/or service manuals, and all other data pertinent to operating or servicing the complete apparatus. Preventative maintenance instructions and recommended frequency.
f. Schematic and wiring diagrams of power, control, and piping systems. A detailed description of operation shall be included for each diagram to describe all modes of operation of the system indicated. Where the integrated system requires interlocking and control of other components in normal operation, these components shall be included in the description of operation.
g. General bulletins and catalog cuts describing complete apparatus, including operating principles and fundamentals.
h. Service data sheets showing design performance, utility requirements, etc., as applicable to the specific duty for which the equipment is furnished.
i. Certified head and capacity curves for pumps. Impeller size furnished and maximum size available shall be noted on these data sheets.
j. Curves and/or data for overall range of operation from minimum to maximum capacity or load, showing capacity or load, utilities motive medium required, total or incremental differential head, and other pertinent information applicable to the equipment or its component assemblies.
k. Materials of construction of all components.

2. Pulsation Dampeners, Valves, Pressure Gauges, Wye Strainer, PVC Spray Hose, Flexible Couplings, and Dry Disconnect Coupling: Shop Drawings:
   a. Letters of Certification of Compliance on materials, equipment, etc.
   b. Final Certified Drawings showing outline dimensions, foundation layout or mounting information, and other pertinent dimensions.
   c. Field erection instructions, assembly drawings and/or diagrams, detailed reference drawing lists, lists of erection details, and list of spare parts supplied with equipment.
   d. Shop Detail Drawings showing individual sub- assemblies and fabricated pieces with material specifications and other applicable data.
   e. Installation instructions, operating and/or service manuals, and all other data pertinent to operating or servicing the complete apparatus. Preventative maintenance instructions and recommended frequency.
   f. General bulletins and catalog cuts describing complete apparatus, including operating principles and fundamentals.
   g. Materials of construction of all components.
3. Control Panel: Shop Drawings:
   a. Refer to Division 13, Special Construction, and Division 16, Electrical.

B. Submit Drawings showing fabrication, dimensions, capacity, weight, materials of construction, electrical diagrams and bill of materials, including manufacturers, and installation piping.

C. Submit pump data and performance curves showing efficiency, NPSH, flow, pressure, horsepower, and shut-off head.

D. Submit documentation that the manufacturer has produced, supplied and placed into satisfactory service, equipment similar to that specified herein.

E. No equipment shall be shipped until the Shop Drawings are approved by the ENGINEER.

F. Submit complete Installation, Operation, and Maintenance Manuals, including copies of all approved Shop Drawings.

G. A copy of this specification section, with addendum updates included, and all referenced and applicable sections, with addendum updates included, with each paragraph check-marked to indicate specification compliance or marked to indicate requested deviations from specification requirements. Check marks (✓) shall denote full compliance with a paragraph as a whole. If deviations from the specifications are indicated, and therefore requested by the CONTRACTOR, each deviation shall be underlined and denoted by a number in the margin to the right of the identified paragraph, referenced to a detailed written explanation of the reasons for requesting the deviation. The ENGINEER shall be the final authority for determining acceptability of requested deviations. The CONTRACTOR shall furnish equipment and/or services as specified if an exception and/or deviation is rejected. The remaining portions of the paragraph not underlined will signify compliance on the part of the CONTRACTOR with the specifications. Failure to include a copy of the marked-up specification sections, along with justification(s) for any requested deviations to the specification requirements, with the submittal shall be sufficient cause for rejection of the entire submittal with no further consideration.

H. The CONTRACTOR shall submit the preventive maintenance information package as part of the shop drawing submittal package to the ENGINEER for review and approval. **SHOP DRAWING SUBMITTAL PACKAGE WILL NOT BE APPROVED WITHOUT ACCEPTANCE OF PREVENTIVE MAINTENANCE INFORMATION.**

PART 2 - PRODUCTS

2.1 CHEMICAL METERING PUMPS

A. Chemical Metering Pumps:

1. Positive displacement, diaphragm type chemical metering pumps shall be provided to deliver 40% aluminum chlorohydrate solution to the self-cleaning strainers, 12.5% sodium hypochlorite, 50% citric acid, 50% Sulfuric Acid, 38% sodium bisulfite, 50% sodium hydroxide, solution to the CIP system at the membrane facility, and 12.5% sodium hypochlorite solution to the membrane permeate pipe at the membrane facility. Chemical metering pumps shall be capable of 24 hour per day operation. Discharge pressure shall be sufficient to feed the chemicals from the chemical facility at a specified rate to meet the design criteria.

B. Operating Conditions:
   1. Each pump shall have a maximum capacity as follows:

Chemical	Chemical Concentration (%)	Location/Facility	Maximum Capacity (gph)
ACH	40	ACH Facility	5.00
Sodium Hypochlorite	12.5	MFS Chemical Facility	744.00
Citric Acid	50	MFS Chemical Facility	576.00
Sulfuric Acid	50	MFS Chemical Facility	45.60
Sodium Bisulfite	38	MFS Chemical Facility	82.20
Sodium Hydroxide	50	MFS Chemical Facility	208.20
Sodium Hypochlorite	12.5	Modified Bulk Sodium Hypochlorite Facility	14.00

C. Pump Construction:
   1. A steel and nodular iron non-loss-motion stroke adjust mechanism, driven by a direct coupled variable speed DC motor, shall actuate a flat, Teflon faced composite diaphragm. Solenoid-driven pumps, lost-motion mechanically actuated diaphragm pumps and hydraulically actuated diaphragm pumps will not be accepted. The liquid ends shall provide for easy maintenance and integral sight flow indication via clear PVC cartridge-type check valves. Conventional threaded valves and external sight flow indicators will not be allowed.

Not all valves are clear.

D. Drive:
   1. A steel and nodular iron non-loss-motion stroke adjust mechanism shall be housed in a corrosion resistance, epoxy painted, cast iron gearbox. All drive bearings shall be tapered rollers; all fasteners shall be oil-bath lubricated. Stroke

length shall be controlled manually via a 10-turn micrometer-type adjuster. A percent scale and vernier shall indicate stroke length in 0.25% increments. Each revolution of the knob shall indicate stroke length by 10%.

E. Liquid End:

1. The process diaphragm shall be of Hypalon construction. It shall incorporate convolutions, for unconstrained rolling action and a steel backing plate for volumetric accuracy. An O-ring groove in the head's diaphragm cavity will provide for a complete leak-free seal. Positive flow shall be ensured via cartridge-type check valves. The valve retainers shall be clear CPVC for integral sight flow indication. They shall allow a compression seal to the pump head and pipe connections via O-rings. Valve service or removal shall not require any disturbances to the pump head pipeworks. A secondary diaphragm shall be completely sealed to separate the pump head from the drive unit in order to eliminate any risk of cross-contaminating gearbox lubricant and process fluid.

Diaphragm is TFE-faced elastomer, not pure Hypalon.

F. Control:

1. Each pump shall automatically shut off if a low level is sensed in the appropriate chemical tanks.

G. Manufacturer:

H. Acceptable Manufacturers:

1. UGSI Chemical Feed, Inc,
2. Or approved equal.
3. The naming of a manufacturer in this Specification is not an indication that the manufacturer's standard equipment is acceptable in lieu of the specified component features. Naming is only an indication that the manufacturer may have the capability of engineering and supplying a system as specified.

2.2 PULSATION DAMPENERS

A. Schedule:

1. Chemical: Sodium hypochlorite (NaOCl – 12.5%), Citric acid (50%), Sulfuric Acid (H_2SO_4 – 50%), Sodium bisulfite ($NaHSO_3$ – 38%), Sodium hydroxide (NaOH – 50%), and Aluminum chlorohydrate (ACH – 40%).
2. Minimum Volume: 90 cubic inches per pulsation dampener.
3. Bladder Material: Hypalon.

B. Materials of Construction:

1. Wetted Parts: PVC.
2. Hardware: Stainless steel.
3. Air Fittings: Brass.
4. Each unit shall be equipped with charging valve and 0-160 psig gas pad pressure gauge and integral piping fittings.
5. Provide a nitrogen gas bottle and cart for use in charging pulsation dampeners.

C. Features:
   1. Pulsation damper required on the discharge piping.
   2. Pulsation damper shall be single diaphragm, bladder design. Diaphragm shall be constructed of hypalon.

D. Manufacturer:
   1. Pulsation dampener shall be supplied by Primary Fluid Systems, Inc. or approved equal.

2.3 DEGASSING VALVE

A. General:
   1. The automatic degassing valve is designed to vent gases that cause vapor lock in metering pumps. Degassing valves shall be designed for applications using Sodium hypochlorite (NaOCl – 12.5%), Citric acid (50%), Sulfuric Acid (H_2SO_4 – 50%), Sodium bisulfite ($NaHSO_3$ – 38%), Sodium hydroxide (NaOH – 50%), and Aluminum chlorohydrate (ACH – 40%)..

B. Materials of Construction:
   1. Valve Body: CPVC.
   2. Seal: Viton.
   3. Top and Bottom Connection: 1/2-inch NPT.

C. Manufacturer:
   1. Degassing valve shall be supplied by Primary Fluid Systems, Inc. or approved equal.

2.4 PRESSURE RELIEF VALVES

A. General:
   1. The pump discharge line shall include an external diaphragm type pressure relief valve to protect piping systems from over-pressures, as shown on the Drawings.

B. Materials of Construction:
   1. Valve Body: Type IV, Grade 1, CPVC.
   2. Seals: Teflon.
   3. Diaphragm: Teflon; suitable for Sodium hypochlorite (NaOCl – 12.5%), Citric acid (50%), Sulfuric Acid (H_2SO_4 – 50%), Sodium bisulfite ($NaHSO_3$ – 38%), Sodium hydroxide (NaOH – 50%), and Aluminum chlorohydrate (ACH – 40%).

C. Features:
   1. Valve pressure setting shall be factory set and field adjustable without disconnecting the valve from the line.
   2. Size: As shown on the Drawings.
   3. Capacity: Equal to or greater than pumping head capacity at set pressure.
   4. Set pressure: 50 psi.

D. Manufacturer:
   1. Pressure relief valves shall be supplied by Primary Fluid Systems, Inc. or approved equal.

2.5 PRESSURE GAUGES

A. General:
   1. Pressure gauges shall be selected so that the normal operating pressure falls between 50% and 80% of full scale. The face shall be 4-1/2-inches in diameter, 270 degree movement, 1% accuracy, full-scale, and suitable for bottom stem mounting.
   2. Gauges shall have a Type 316 stainless steel bourdon tube, 300 Series stainless steel case, Type 316 stainless steel socket, shatterproof glass, and 1/4-inch bottom connection.
   3. Gauges shall be a premium grade, heavy-duty bourdon-tube unit with pulsation dampening system. Snubbers or orifices shall not be utilized. Gauges shall be Ashcroft General Service Gauge, Type 1009, or approved equal. Gauges shall have diaphragm seals with 1/2-inch process connection, Titanium housing, and Titanium diaphragm. The fill fluid shall be silicone. Diaphragm seal shall be Ashcroft Type 101 or approved equal.

2.6 DIAPHRAGM VALVES

A. Valves for 2-inch Diameter or Less Pipe:
   1. Diaphragm valves shall be true union design, socket connection, CPVC body with Teflon diaphragm and seals. Type 304 stainless steel shall be used for exposed metal hardware. Valves shall have Teflon sandwiched gas barrier diaphragm to prevent chlorine gas leakage. All shall be suitable hardware for Sodium hypochlorite (NaOCl – 12.5%), Citric acid (50%), Sulfuric Acid (H_2SO_4 – 50%), Sodium bisulfite ($NaHSO_3$ – 38%), Sodium hydroxide (NaOH – 50%), and Aluminum chlorohydrate (ACH – 40%)..
   2. Diaphragm valves shall be of the size as shown on the Drawings. Valves shall be Type 14, as manufactured by Asahi/America, Inc., or approved equal.

B. Valves for Greater Than 2-inch Diameter Pipe:
   1. Diaphragm valves shall be flanged design, CPVC body with Teflon diaphragm and seals. Type 304 stainless steel shall be used for exposed metal hardware. Valves shall have Teflon sandwiched gas barrier diaphragm to prevent chlorine gas leakage. All shall be suitable hardware for Sodium hypochlorite (NaOCl – 12.5%), Citric acid (50%), Sulfuric Acid (H_2SO_4 – 50%), Sodium bisulfite ($NaHSO_3$ – 38%), Sodium hydroxide (NaOH – 50%), and Aluminum chlorohydrate (ACH – 40%).
   2. Diaphragm valves shall be of the size as shown on the Drawings. CONTRACTOR shall provide the necessary flange connections to the

connection piping for a complete valve installation. Valves shall be Type G as manufactured by Asahi/America, or approved equal.

2.7 WYE STRAINER

A. General:
   1. The pump suction lines shall include a strainer, as shown on the Drawings. The wye strainer shall prevent dirt and debris in the chemical entering the pump.

B. Materials of Construction
   1. Strainer Body: Class 23447 per ASTM D1784, CPVC.
   2. Strainer: 1/16-inch perforated plastic, suitable for Sodium hypochlorite (NaOCl – 12.5%), Citric acid (50%), Sulfuric Acid (H_2SO_4 – 50%), Sodium bisulfite ($NaHSO_3$ – 38%), Sodium hydroxide (NaOH – 50%), and Aluminum chlorohydrate (ACH – 40%).

C. Manufacturer:
   1. Wye strainer shall be supplied by Hayward Industrial Products, Inc. or approved equal.

Not Included.

2.8 PRE-CAST POLYMER CONCRETE TRENCH

A. General:
   1. The material covered by these Specifications shall be furnished by a reputable and qualified manufacturer of proven ability who has regularly engaged in the manufacture and installation of pre-cast polymer concrete trench. Manufacturer of the polymer concrete trench shall have a minimum five years of experience with Projects similar in scope to this Project.
   2. Pre-cast polymer concrete trench manufacturer shall be experienced in successfully producing polymer drainage fabrications similar to those indicated in the Drawings, with sufficient production capacity to produce required units without causing delay in the Work.
   3. Pre-cast polymer concrete trench and grating shall be designed to withstand Loading Class C per DIN 19580.
   4. Pre-cast polymer concrete trench shall have a neutral slope with minimum 4-inch depth. Grating shall not include any perforations or slots to allow water to mitigate through.

B. Materials of Construction:
   1. Trench: Pre-cast polymer concrete utilizing vinyl ester resin.
   2. Grating: Ductile iron with solid surface.

C. Features:
   1. Grating shall be attached to the trench utilizing stainless steel lock down bolts and bars.
   2. Provide grating sections in lengths to match trench sections.

3. Top of each channel, which meets with the grating surface, shall include a stainless steel backing plate extending over the top of the trench to prevent chipping.
4. Provide end caps and transition pieces for female to female connections and male to male connections for a complete installation.

D. Manufacturer:
1. Strongwell, Lenoir City, TN.
2. ACO Polymer Products, Chardon, OH.
3. Approved equal.

2.9 CPVC PIPING

A. General: For CPVC Piping: Refer to Section 15065, Thermoplastic Pipe and Accessories.

2.10 FLEXIBLE COUPLINGS

A. General:
1. All chemical piping shall include a flexible coupling as recommended by pipe manufacture.
2. All flexible couplings shall be UV protected for outdoor applications.
3. All flexible couplings shall come complete with flange connections and joint restraints approved by the ENGINEER.
4. All flexible couplings shall be resistant to Sodium hypochlorite (NaOCl – 12.5%), Citric acid (50%), Sulfuric Acid (H_2SO_4 – 50%), Sodium bisulfite ($NaHSO_3$ – 38%), Sodium hydroxide (NaOH – 50%), and Aluminum chlorohydrate (ACH – 40%).

B. Manufacturer:
1. Flexible coupling shall be Proco Series 443B or approved equal.

Not Included.

2.11 TANK FILL - DRY DISCONNECT COUPLING

A. General:
1. The tank fill line shall include a dry disconnect coupling, as shown on the Drawings. The dry disconnect coupling shall prevent any excess chemical from leaking due tank filling operations.
2. Provide dust cap of the same material as the disconnect coupling.

B. Materials of Construction:
1. Body: Hastalloy C.

C. Manufacturer:
1. Dry disconnect coupling shall be the Kamvalok model as manufactured by OPW, Cincinnati, OH or approved equal.

2.12 CONTROL PANEL

A. General:
   1. Furnish an air conditioned NEMA 4X stainless steel control panel for the metering pumps. The control panel shall be supplied as shown on P&IDs and as specified in Division 13, Special Construction. Control panel shall be mounted on a unistrut rack, elevated outside the secondary containment area.

2.13 PIPE SUPPORTS

A. General:
   1. Supports and racks for use on all electrical conduit and chemical solution piping within the MFS Chemical Facility, the ACH Facility and the Modified Bulk Sodium Hypochlorite Facility, shall be Type 316 stainless steel. The pipe supports shall include all strut channels, fittings, bolts, nuts, washers, and anchors as shown on the Drawings.

PART 3 - EXECUTION

3.1 INSTALLATION/START-UP TESTING

A. All system equipment shall be installed per manufacturer specifications and approved Shop Drawings.

B. All equipment shall be operationally-tested by the CONTRACTOR at the job site following installation of the equipment, controls, valves, and piping. Should the tests indicate any malfunction, the CONTRACTOR shall make all necessary repairs and/or adjustments. Tests and adjustments shall be repeated until, in the opinion of the ENGINEER, the installation is complete and the equipment is functioning properly and accurately, and is ready for permanent, continuous operation.

3.2 MANUFACTURER'S FIELD SERVICE

Field service is not included in this budget price. It is offered as a per diem add-on price.

A. A factory trained representative of the chemical metering pumps shall be provided for installation supervision, start-up and test services, and operation and maintenance personnel training services. The factory representatives shall make a minimum of one visit to the site (minimum of eight hours). The visit shall be for assistance in the installation of the equipment, checking the completed installation, start-up of the system, and training of the operators.

B. All costs, including travel, lodging, meals, and incidentals, shall be considered as included in the CONTRACTOR'S lump sum bid price.

++ END OF SECTION ++

SECTION 13446

= Complies with Specification

FLOOR SCALE AND INSTRUMENTS

= Deviation (explain deviation and why)

PART 1 - GENERAL

1.1 SUMMARY

A. Section includes:
   1. Weight instruments used to measure weight of chemical tote bins on concrete pad.
   2. Mounting hardware for indicators and load cells.

B. National Electrical Manufacturers Association (NEMA):
   1. 250 - Enclosures for Electrical Equipment (1000 V Maximum).

1.2 REFERENCES

A. National Institute of Standards and Technology (NIST):
   1. Handbook 44: Specifications, Tolerances and Other Technical Requirements for Weighing and Measuring Devices.

1.3 DEFINITIONS

A. NEMA:
   1. Type 4X enclosure in accordance with NEMA 250.

1.4 SUBMITTALS

A. Submit for approval the following:
   1. Product data:
      a. Manufacturer.
      b. Model Number.
      c. Materials
      d. Rated capacity and rated conditions.
      e. Accuracy.
   2. Shop drawings: Include the following:
      a. Dimensioned Drawings certified for construction,
      b. Foundation and support requirements and anchor bolt setting plans,
      c. Installation instructions.
      d. Connection diagram,
      e. Loop diagram,
   3. A copy of this specification section, with addendum updates included, and all referenced and applicable sections, with addendum updates included, with each paragraph check-marked to indicate specification compliance or marked to indicate requested deviations from specification requirements. Check marks

(✓) shall denote full compliance with a paragraph as a whole. If deviations from the specifications are indicated, and therefore requested by the CONTRACTOR, each deviation shall be underlined and denoted by a number in the margin to the right of the identified paragraph, referenced to a detailed written explanation of the reasons for requesting the deviation. The ENGINEER shall be the final authority for determining acceptability of requested deviations. The CONTRACTOR shall furnish equipment and/or services as specified if an exception and/or deviation is rejected. The remaining portions of the paragraph not underlined will signify compliance on the part of the CONTRACTOR with the specifications. Failure to include a copy of the marked-up specification sections, along with justification(s) for any requested deviations to the specification requirements, with the submittal shall be sufficient cause for rejection of the entire submittal with no further consideration.

4. The CONTRACTOR shall submit the preventive maintenance information package as part of the shop drawing submittal package to the ENGINEER for review and approval. **SHOP DRAWING SUBMITTAL PACKAGE WILL NOT BE APPROVED WITHOUT ACCEPTANCE OF PREVENTIVE MAINTENANCE INFORMATION.**

1.5 QUALITY ASSURANCE

A. Test reports:
   1. Factory test report and certificate.

B. Certificates:
   1. Certified calibration data meeting NIST Handbook 44, as applicable to commercial weighing.
   2. National Type Evaluation Program Certificate of Conformance.

C. Manufacturer's instructions:
   1. Include manufacturer's instructions of installation including mounting details, description of system operation, start-up data and troubleshooting check lists.

D. Operations and maintenance data:
   1. Include manufacturer's literature; cleaning procedures, replacement part lists, wiring diagrams, and repair data.
   2. Include a list of all configurable parameters, and the final values for each.
   3. List of recommended spare parts.
   4. List of special tools necessary for proper operation and/or maintenance.
   5. Exploded view drawings that illustrate all assemblies, sub-assemblies, and components.
   6. Routine test procedures for all electronic and electrical circuits.
   7. Troubleshooting chart covering the complete valve and controls/electrical power systems, showing description of trouble, probable cause, and suggested remedy.

8. Certified factory and field-test results.

E. Manufacturer qualifications: Manufacturer has minimum of 5 years of successful operation of similar scales in similar installations.

1.6 WARRANTY

A. The scale manufacturer shall warrant the units being supplied to the OWNER against defecting in workmanship and material for a period of two years after installation under normal use, operation, and service. The warranty shall cover parts and labor and shall be in printed form and apply to all similar units.

PART 2 - PRODUCTS

2.1 INTEGRATED SYSTEM OF WEIGHT SCALE. PLATFORM, AND LOAD CELL

A. Manufacturers
   1. Acceptable manufacturers:
      a. Mettler-Toledo.
      b. Or Approved Equal.

B. General Provisions
   1. Provide 1 electronic floor scale systems for the purpose of monitoring chemical solution consumption from a tote bin.
   2. Each scale shall have an overall platform size of 59 inches wide by 59 inches long by not more than 9 inches tall and shall have a gross weighing capacity of 5,000 pounds.
   3. The scale should be constructed for use in a washdown environment and shall have components suited for that environment.
   4. The scale platform and subframe assembly shall be constructed of Type 316 stainless steel or steel with Tuffcoat system.

C. Load Cells
   1. Load cells shall have the following individual characteristics:
      a. Temperature stable, rolling diaphragm type, allows 4-degree tilt of load plate without affecting scale accuracy.
      b. Rated capacity: 5,000 pounds.
      c. Temperature compensation: -10 to +40 degrees Celsius.
      d. Maximum loads:
         1) Safe: 150 percent of rated capacity.
         2) Ultimate overload: 300 percent of rated capacity.
         3) Safe side: 100 percent of rated capacity.
      e. Gauge cavity seal type: Welded hermetic gauge cover.
   2. Load cells to be constructed of 17-4 ph stainless steel and shall have a welded hermetic gauge cover over the gauge and wiring cavities.

3. Each load cell to have an integral conduit fitting on the cable entrance into the load cell for enhanced moisture protection.
4. Each load cell to have a data plate affixed to the load cell which clearly shows:
    a. Manufacturer.
    b. Capacity.
    c. Part number.
    d. Serial number.
    e. National Type Evaluation Program certificate of performance number.
    f. Class number.
    g. Maximum divisions (NMax).
    h. Load cell Vmin.

D. Floor Scale Platform
1. Scale shall have an unobstructed weighing surface, use of side rails or other similar designs is not acceptable.
2. Each scale shall have provisions for lifting the entire floor scale for periodic inspection and maintenance.
    a. The scale manufacturer shall provide a minimum of 2 threaded through hole lifting points in the floor scale for this purpose.
    b. The scale manufacturer shall also provide threaded steel plugs for each of these holes to protect the lifting points during non-use.
3. A removable access plate shall be provided in the top of the floor surface to provide access to the load cell summing junction box.
4. Scale suspension shall be of a rocker foot style design to allow ease of movement and installation. The PFD779 design
5. Load foot assembly shall be stainless steel and be threaded to allow for adjustment to compensate for uneven floor conditions.
6. A level bubble shall be provided, visible from the top of floor.

E. Junction Box.
1. 1. Scale shall have a junction box assembly mounted internally within the floor scale platform.
    a. Access to the junction box assembly shall be accomplished via removable plate in the top of the scale platform.
    b. Remote mounted, or side access junction box assemblies are not acceptable.
2. Junction box enclosure shall be constructed of Type 316 stainless steel and shall be designed to NEMA 4X standards.
3. The junction box enclosure shall have wash down duty connectors, 1 for each load cell cable, and 1 additional connector for the instrument cable.
    a. Multiple cables using single box connectors is not acceptable.
4. The junction box shall contain a printed circuit board for the purpose of individual load cell wiring termination, summing of the output signals from each load cell, trimming/balancing the load cell signals, and wiring the interface to the digital instrument.

5. The printed circuit board shall have individual connectors for each of the load cells, and the instrument interface cable.
    a. Each wire shall have a single terminal connection. Doubling up or ganging of wires to one terminal is not acceptable.
6. The summing printed circuit board shall have potentiometers, one per load cell for the electrical trimming/balancing of the load cell signals during calibration.

F. Digital display console located near the scale with integral power supply for the load cell, integral 4 to 20 milliampere transmitter with output signal proportional to the weight, and relay output (120 V, 10 amp or better rated contact) for low level alarm that will be used as an interlock to shut down the feed equipment.
1. Temperature range: 10 to 125 degrees Fahrenheit.
2. Adjustable low weight alarm relay with dry contacts for remote alarm monitoring.
3. Equipped with automatic tare.
4. Enclosure: NEMA 4X, stainless steel.
5. Power supply: 120 volts alternating current.
6. Weight indicating display.
7. Provides Type 316 stainless steel instrument column.

PART 3 - EXECUTION

3.1 INSTALLATION

A. Install in accordance with manufacturer's recommendations.

B. Provide field service by the scale manufacturer who shall perform final calibration and certify the scale to an accuracy of, or better than, that required by NIST, Handbook 44, as applicable to commercial weighing.

END OF SECTION

CST Check To Spec with Deviations As Required.

✓ SECTION 13127

✓ EXTRUDED FLAT PANEL COVERS

✓ PART 1 - GENERAL

✓ 1.1 SUMMARY

✓ A. Furnish all labor, materials, and equipment required to design, fabricate, deliver, and install a new extruded flat aluminum cover structure with all appurtenances required for a complete and operational installation.

✓ 1. Membrane Trains 1 thru 4.

✓ 2. Membrane Facility Common Inlet Channel.

✓ 3. CIP Tank.

✗ B. The enclosure shall be a flat cover structure conforming to the dimensions indicated on the Drawings, a rectangle aluminum structure with ~~stainless steel structure~~ members.

Acceptance to: Aluminm Structural Memebers

✗ C. All metal components of the aluminum structure shall be aluminum with ~~cold-formed stainless steel~~. No galvanized, painted, or plated steel shall be used.

Acceptance to: Aluminm Structural Memebers

✓ D. The structure shall be designed as a substantially airtight system under all design load and temperature conditions. All raw edges of the aluminum panels shall be covered and sealed.

✓ E. The cover manufacturer must coordinate with the membrane equipment supplier for design of the covers, design of supporting structural members, and coordination of cover cutouts to accommodate membrane equipment system piping. The membrane basin aluminum cover design must be fully integrated with the membrane equipment system design.

✓ F. The cover manufacturer shall provide ~~4~~ access hatches each for each Membrane Train. Coordinate pipe support attachments and penetrations as shown in the Drawings.

Acceptance: Appurtenaces per drawings [type and QTY]:

✓ 1.2 RELATED SECTIONS

✓ A. Drawings and General Provisions of the Contract, including General Supplementary Conditions apply to this Section.

✓ B. Section 01300, Submittals.

Acceptance: Only as applicable to CST and the cover system.

✓ C. Section 01640, Materials and Equipment.

Acceptance: Only as applicable to CST and the cover system.

✓ D. Section 01650, Starting of Systems.

Acceptance: Only as applicable to CST and the cover system.

✓ E. Section 09900, Painting.
Acceptance: Only as applicable to CST and the cover system.

✓ F. Division 13, Special Construction.
Acceptance: Only as applicable to CST and the cover system.

✓ G. Division 15, Mechanical.
Acceptance: Only as applicable to CST and the cover system.

✓ H. Division 16, Electrical.
Acceptance: Only as applicable to CST and the cover system.

✓ 1.3 REFERENCES

✓ A. Aluminum Association Specifications for Aluminum Structures.

✓ B. Aluminum Association Aluminum Design Manual, Specification, and Guidelines for Aluminum Structures.

✓ C. ASCE 8-90, Specification for the Design of Cold-Formed Stainless Steel Structural Members.

✓ D. ASTM C864-90, Standard Specifications for Performed Gasket and Sealing Material.

✓ E. ASTM F593, Standard Specification for Stainless Steel Bolts, Hex Cap Screws, and Studs.

✓ 1.4 SUBMITTALS

✓ A. Drawings describing the completed structure and all its components shall be submitted, complete with materials of construction and typical details. Drawings shall be sealed and signed by a qualified Professional Engineer registered in the State of Arizona.

✓ B. Records certifying the satisfactory inspection of all structural welds of aluminum components shall be submitted prior to delivery of all fabricated materials.

✓ C. Design calculations verifying conformance to deflection limits shall be submitted. Deflection calculations are required for structural members as well as walking surfaces.

✓ D. Descriptive and Operation and Maintenance Data submittals shall be made in accordance with the Data Reference Symbols defined in Section 01300, Submittals.

✓ 1. Covers: Shop Drawings and O&M Manuals:

✓ a. Letters of Certification of Compliance on materials, equipment, etc.

✓ b. Final Certified Drawings showing outline dimensions, foundation layout or mounting information, and other pertinent dimensions.

✓ c. Field erection instructions, assembly drawings and/or diagrams, detailed reference drawing lists, lists of erection details, and list of spare parts supplied with equipment.

✓ d. Shop Detail Drawings showing individual sub- assemblies and fabricated pieces with material specifications and other applicable data.
✓ e. General bulletins and catalog cuts describing complete apparatus, including operating principles and fundamentals.
✓ f. Materials of construction of all components.

✓E. All equipment manufactures shall submit evidence of conformance with the Specifications as required by the individual Specifications Sections. Naming of a manufacturer in the Specifications is not an indication that the manufacturer's proposed or standard equipment is acceptable in lieu of the specified components and features. Naming is only an indication that the manufacturer may have the capability of engineering and supplying a system as specified.

✓F. Before executing any of the Work in this Section prints or Drawings shall be submitted to the ENGINEER showing dimensions, sizes, thickness, gauges, materials, finishes, joint attachments, erection procedure, and thermal expansion allowances.

✓G. A complete set of design calculations for the covers shall be submitted. These calculations shall be signed by a Registered Professional Engineer. All Work shall be fabricated and erected in accordance with the approved Drawings.

✓H. Certification that the specified material alloys, sizes, and quantities have been furnished shall be submitted upon completion of the Project.

✓ I. Unit responsibility form not required for extruded flat panel covers.

✓J. Shop Drawings: Submit for approval the following:
✓ 1. Include the following:
✓ a. Dimensions, sizes, thicknesses, gauges, materials, finishes.
✓ b. Attachment and erection procedures.
✓ c. Number and location of penetrations.
✓ d. Penetration details.
✓ e. Access hatch locations.
✓ f. Special details not specifically indicated on the Drawings.
✓ 2. A copy of this specification section, with addendum updates included, and all referenced and applicable sections, with addendum updates included, with each paragraph check-marked to indicate specification compliance or marked to indicate requested deviations from specification requirements. Check marks (✓) shall denote full compliance with a paragraph as a whole. If deviations from the specifications are indicated, and therefore requested by the CONTRACTOR, each deviation shall be underlined and denoted by a number in the margin to the right of the identified paragraph, referenced to a detailed written explanation of the reasons for requesting the deviation. The ENGINEER shall be the final authority for determining acceptability of requested deviations. The CONTRACTOR shall furnish equipment and/or services as specified if an exception and/or deviation is rejected. The

remaining portions of the paragraph not underlined will signify compliance on the part of the CONTRACTOR with the specifications. Failure to include a copy of the marked-up specification sections, along with justification(s) for any requested deviations to the specification requirements, with the submittal shall be sufficient cause for rejection of the entire submittal with no further consideration.

The CONTRACTOR shall submit the preventive maintenance information package as part of the shop drawing submittal package to the ENGINEER for review and approval. **SHOP DRAWING SUBMITTAL PACKAGE WILL NOT BE APPROVED WITHOUT ACCEPTANCE OF PREVENTIVE MAINTENANCE INFORMATION.**

✓ PART 2 - PRODUCTS

✓ 2.1 DESCRIPTION

✗ A. The flat cover shall be clear-span and self-supporting from the peripheral structure. The aluminum cover shall be composed of panels and beams. All panels shall interlock with the adjoining beam and panels without the use of threaded fasteners. Uplift of each panel will be resisted with the use of an integral latch system. The use of structural members in contact with the contents of the basin is expressly prohibited. The flat cover shall consist of removable panels each weighing no more than ~~275~~ pounds, and other covers not to exceed 150 pounds, unless otherwise indicated on Drawings. The required lifting force per panel shall not exceed the dead weight of the panel. Each panel must be able to be removed without needing to remove more than the two adjacent panels. The need for removing flashing or "hold-down" extrusions longer than the width of the panel is prohibited. The flat cover shall have an integral aggressively non-skid surface. Raised surfaces without the use of texturing to achieve slip resistant is not acceptable. The use of checkered plate, paint, tape, sandblasting, or other applied systems to achieve the slip resistant surface is expressly prohibited.

Accptance to no more than 500lbs and other covers not to exceed 150lbs

✓ B. The design shall prevent water pooling which may result in over-stressing the flat cover.

✓ C. Cover manufacturer shall provide access hatches, gravity vents, and pipe penetrations as shown on the Drawings.

✓ D. The removable closure panels shall be attached continuously along their edges to the structural members using an interlocking joint. Elastomeric weather seal gasket shall form a substantially airtight seal along the panel edges. The gaskets shall be fully enclosed to prevent ultraviolet exposure.

✓ E. Access to any location under the cover shall be gained through integral gear hinged access hatches. The Access Hatch Panels shall have the identical properties as the rest of the aluminum cover including loads, deflection and slip

resistance specifications. The hinged access panels shall be the full panel width. The length of the access panel shall be clearly indicated on drawings. Hinged panel components including hinges, decking and lifting handles shall be extruded 6061-T6. While in the closed position the hatches will be completely flush therefore posing no tripping hazard. In the open position the panel shall lie flat on the cover and will not need a hold open device.

✓ F. The cover system shall be mounted on aluminum angle attached to the inside face of the concrete to match existing aluminum cover systems in appearance and functionality. No portion of the cover system shall be mounted to the top surface of the concrete wall. The aluminum angle shall be mounted at an elevation that provides a zero transition between the cover system and the top of concrete.

✓ 2.2 MATERIALS

✓ A. The following is a summary of approved materials and/or material specifications. All aluminum alloys shall be defined by the Aluminum Association and published in the Aluminum Standards and Data:

✓ 1. Bolts and Fasteners: All bolts and fasteners shall be 316 stainless steel.

✓ 2. Structural Shapes: Aluminum structural shapes shall be alloy 6061-T6, 6005A-T6, or 6063-T6 minimum 0.10 inch thick. Load supporting surfaces shall be of sufficient thickness to meet or exceed all loading requirements specified in this Section.

✗ 3. Aluminum extrusions: 6061-T6 alloy, mill-finished. Acceptance: 6061-T6, and 6063-T6

✓ 4. Closure-flashing-to-panel seals: 3/8-inch Hypalon, Santoprene, or Neoprene gaskets.

✓ 5. Closure flashing anchors and hardware: Type 316 stainless steel, 3/8-inch diameter.

✓ 6. Access hatch door and frame materials: Same as for cover panels.

✓ 7. Access hatch hinges, handles, prop rods, and latches: Aluminum.

8. Handrail: Removable, aluminum, able to prevent accidental entry into hatch opening.

✓ 9. Miscellaneous Shapes: Miscellaneous aluminum shapes shall be alloy 6061-T6, 6005A-T6, or 6063-T6.

✓ 10. Gaskets: All gaskets shall be Neoprene conforming to ASTM C864-90, resistant to ozone and shielded from exposure to ultraviolet light.

✓ 11. Sealant: All sealants shall be resistant to ozone and ultraviolet light and conform with Federal Specification TT-S-00230C.

✓ 12. Anchors shall be epoxy-type. Expansion-type anchors are not permitted.

✓ 13. Nameplates, manufacturer's name, or other identifications: Maximum 6 inches by 6 inches in size.

✓ 14. Cover configuration: Free-standing, flat, 1-piece, interlocking, supported at each end only, without intermediate supports, removable, arranged as indicated on the Drawings, with flat, planar surface exposed and welded reinforcing ribs and stiffeners facing downward toward water surface.

15. Covers components: Standard and specially reinforced panels, able to safely sustain specified loads without permanent deformation or evidence of failure.
16. Joints between panels: Horizontal tongue and groove type.
17. Access hatches:
    a. 1. Reinforcement: Aluminum structural members able to prevent bowing, warping, or other distortions.
    b. Doors: Able to be lifted and locked open by 1 person.
    c. Mounting: Curb mounted and flashed.
    d. Curbs: Minimum 3/16-inch thick with welded corners.
    e. Door seal: Gasket against curb.
18. Penetration reinforcement: Minimum 1/4-inch thick aluminum stiffeners, able to prevent bowing, sagging, warping, or other distortions.
19. Penetration flashing and sealant: Manufacturer's standard, able to prevent intrusion of air and allow for removal of covers with minimum disassembly of equipment, piping, or duct.
20. Pressure and vacuum relief: No additional measures required. Pressure and vacuum relief is provided by gravity ventilators and goose-neck vents, downstream of membrane trains, with the air space between membrane trains.
21. Panel top surface: Non-slip, manufactured as part of panels or applied to surfaces

2.3 EXPERIENCE

A. No equipment shall be supplied by any manufacturer not regularly engaged in the manufacturing and production of flat covers in the size and character herein specified. The manufacturer must have designed, manufactured and installed at least one roof of the same type and of similar size as units specified herein. This roof must be in satisfactory use for a period not less than five years.

2.4 DESIGN LOADS

A. The entire flat cover shall be designed to sustain the loads specified herein, within the stress limitations of the Aluminum Association Specifications for Aluminum Structures.

B. The load cases to be considered shall be those described below, unless more severe loads are specified by the purchaser.
   1. Dead Load: The dead load shall be defined as the weight of the structure and all material permanently attached to and supported by the structure.
   2. Live Load: 40 pounds per square foot live load plus dead load.
   3. Wind Load: The wind load shall be obtained by ASCE 7-98.
   4. Resistance to wind uplift.
   5. Vacuum/Pressure Load: 1-inch water column vacuum.
   6. Panel Design Load: In addition to the above mentioned loads, the aluminum panels shall be designed for a concentrated single load of 500 pounds on any

single panel area equal to 4 square feet. These loads are to be taken as acting separately from one another and not simultaneously with the other design loads.

✓ 7. MBR Basin cover design as indicated on the drawings is as follows:
- ✓ a. Dead load.
- ✓ b. 2. Live load.
  - ✓ 1) Live load case 1: 100 psf downward.
  - ✓ 2) Live load case 2: 65 psf upward due to seismic sloshing.
  - ✗ 3) Load case 3: 40 psf downward over entire cover plus ~~700~~ pound downward concentrated load over a 1-foot square area. Acceptance: 400lbs
- ✓ c. Unbalanced live load: Live loads patterned in a way to create maximum shear, moments, and deflections.

✓ 8. Membrane cassette load: Aluminum cover panel designed to support loading from one fully wet weight of GE/Zenon 500D membrane cassette, 4 point loads at 2500 pounds each.

✓ 9. Load Combinations: The loads described above shall be applied to the flat cover in the following combinations:
- a. Dead load + live load case 1 + vacuum load.
- b. Dead load + live load case 2.
- c. Dead load + live load case 3 + vacuum load.
- d. Dead load + unbalanced live load + vacuum load.
- e. Dead load + membrane cassette load.

✓ 10. Deflections: For the above loads and load combinations, the deflection of all components (structural and cladding) shall not exceed L/240 with L equal to the short span of the component. This deflection limit applies not only to the flat cover as a whole, but also to the skin of the cover spanning between the supporting edges of each panel or module. Calculations stamped by a Registered Professional Engineer shall be provided at the time of submittal to ensure that this requirement has been met.

✓ 11. Temperature: The load combinations listed above shall be considered for a temperature change of 100° F below the installation temperature and 100° F above the installation temperature and for a material temperature range of 40° F below zero to 160° F above zero.

✓ 12. Seismic criteria:
- a. American Society of Civil Engineers (ASCE):
  - 1) 7-10 - Minimum Design Loads for Buildings and Other Structures.

✓ 13. Wind load:
- a. International Code Council (ICC)
- b. American Society of Civil Engineers (ASCE)
  - 1) 7-10 - Minimum Design Loads for Buildings and Other Structures.

✓ 2.5 CONNECTIONS

✓ A. In no case shall a joint be designed to sustain a greater total resultant shear force than that which would be allowed by summing the allowable shear force of the individual fasteners, based on their net cross-section areas through the shear plane

and the allowable shear stress of the material. The use of manufacturers' test data to rationalize an increase in assumed fastener strengths is prohibited. In no case shall values greater than those published by the Aluminum Association and ASTM F593 for aluminum and stainless steel fasteners, respectively, be used. The allowable stresses are as follows:

Fastener Material	Allowable Shear Stress
Series 316 Stainless Steel	20% of Minimum Tensile Strength as published in ASTM F593
6061-T6 Aluminum	11 ksi
7075-T73 Aluminum	18 ksi

2.6 MANUFACTURERS

A. Acceptable Manufacturer:
   1. CST covers
   2. Or approved equal.

PART 3 - EXECUTION

3.1 INSTALLATION

A. All Work shall be executed by skilled mechanics with a supervisor experience in the erection of flat covers. The flat cover shall be erected plumb and level and in proper alignment.

B. Field refabrication of structural components or panels will not be accepted. Forcing of the structure to achieve fit-up during construction is expressly forbidden and not acceptable.

C. All sealant joints shall be tooled slightly concave after sealant is installed. Care shall be taken to keep sealant confined to joint area, and any outside of the joint shall be moved so that the panels will be free from misplaced sealant. All gasket materials shall be continuous; splices will not be allowed between right angles.

3.2 WARRANTY

A. The flat cover manufacturer shall warrant that the work described herein shall be free from defects (workmanship and material). The flat cover manufacturer shall replace or repair only faulty workmanship or defective material furnished by it that is reported to it within one year from the date of completion of this scope of Work.

SECTION 13207

FIBERGLASS REINFORCED PLASTIC ABOVE GROUND STORAGE TANKS

PART 1 - GENERAL

1.1 SUMMARY

A. New Installation:
   1. Furnish all labor, materials, tools, equipment, appurtenances, and services to install the following FRP tanks:
      a. MFS Chemical Facility:
         1) One 3,200 gallon (8 feet diameter by 10 feet high) 12.5% Sodium Hypochlorite Tank.
      b. Membrane Filtration Facility:
         1) One 4,500 gallon (Approximately 9 feet diameter by 12 feet high) MFS Backpulse Storage Tank.

1.2 SECTION INCLUDES

A. FRP above ground storage tanks.

1.3 RELATED SECTIONS

A. Section 01300, Submittals.

B. Section 09900, Painting.

C. Section 10400, Equipment Identification Plates.

D. Section 11715, Chemical Metering Pumps and Appurtenances

1.4 REFERENCES

A. ASTM D3299, Specification for Filament Wound Glass Fiber Reinforced Thermoset Resin Chemical Resistant Tanks.

B. ASTM D2563, Level II.

C. Code of Federal Regulations, Title 29, Chapter XVII, Part 1910 – Occupational Safety and Health Standards.

1.5 QUALITY ASSURANCE

A. Manufacturer's Qualifications:

1. The material covered by these Specifications shall be furnished by a reputable and qualified manufacturer of proven ability who has regularly engaged in the manufacture and installation of FRP tanks.
2. Substitution of any component or modification of system shall be made only when approved by the OWNER.
3. FRP tank manufacturer shall be experienced in successfully producing FRP fabrications similar to those indicated in the Drawings, with sufficient production capacity to produce required units without causing delay in the Work.

1.6 WARRANTY

A. The manufacturer shall warrant the units being supplied to the OWNER against defects in workmanship and material for a period of one year under normal use, operation, and service. The warranty shall cover parts and labor and shall be in printed form and apply to all similar units.

B. Any services required for the tank that fall within the parameter of the warranty conditions shall be provided by the manufacturer or its certified representative to provide the service required.

1.7 SUBMITTALS

A. Shop Drawings: Submit for approval the following:
1. Letters of Certification of Compliance on materials, equipment, etc.
2. Final Certified Drawings showing outline dimensions, foundation layout, or mounting information, and other pertinent dimensions.
3. Assembly drawings and/or diagrams, detailed reference drawing lists, and lists of erection details.
4. Shop Detail Drawings showing individual sub-assemblies and fabricated pieces with material specifications and other applicable data.
5. Installation instructions, operating and/or service manuals, and all other data pertinent to operating or servicing the complete apparatus. Preventative maintenance instructions and recommended frequency.
6. Schematic and wiring diagrams of power, control, and piping systems. A detailed description of operation shall be included for each diagram to describe all modes of operation of the system indicated. Where the integrated system requires interlocking and control of other components in normal operation, these components shall be included in the description of operation.
7. General bulletins and product literature describing complete apparatus including operating principles and fundamentals.
8. Service data sheets showing design performance, utility requirements, etc., as applicable to the specific duty for which the equipment is furnished.
9. Head capacity curves for pumps. Impeller size furnished and maximum size available shall be noted on these data sheets.

*Pumps not included.

10. Curves and/or data for overall range of operation from minimum to maximum capacity or load, showing capacity or load, utilities motive medium required, total or incremental differential head, and other pertinent information applicable to the equipment or its component assemblies.
11. Materials of construction of all components.
12. Renewal parts list with diagrammatic or cross-section drawings showing part identification. Material analysis or trades designation for each significant part is to be noted on parts lists or on a separate sheet.
13. Mechanical seal details, specifications, etc., bearing manufacturer's standard identification and/or interchangeable number for all anti-friction bearings in the equipment proper and its accessory items.

*Pumps not included.

* B. Shop Tests: Submit for approval:
    1. Pump casings shall be hydrostatically tested to twice the discharge head or 1-1/2 times the shutoff head, whichever is greater.
    2. Running Test: Pump assembly shall be operated from zero to maximum capacity as shown on the approved curve. Results of the test shall be shown in a plot of test curves showing head, flow, horsepower, efficiency, and current. Readings shall be taken at rated speed capacity points including shut-off, design point, and minimum head for which pump is designed to operate.
    3. Each test shall be witnessed by the Factory Registered Engineer, who is an employee of the pump manufacturer. Engineer shall sign and seal all copies of curves and shall certify that hydrostatic tests were performed. Tests shall be conducted in conformance with applicable Hydraulic Institute Standards.
    4. Pumps shall not be shipped until the ENGINEER has approved the test reports.

*Field test by others.

* C. Field Test Results:
    1. Submit a written report giving the results of the required field tests.

✓ D. Manufacturer's Reports:
    1. Submit written report of the results of each visit by a manufacturer's serviceman, including purpose and time of visit, tasks performed, and results obtained.

✓ E. Operation and Maintenance Manuals: Submit complete Operation and Maintenance Manuals, including field erection instructions, in conformance with the Operation and Maintenance Manuals Section of Section 01300, Submittals.

✓ F. A copy of this specification section, with addendum updates included, and all referenced and applicable sections, with addendum updates included, with each paragraph check-marked to indicate specification compliance or marked to indicate requested deviations from specification requirements. Check marks (✓) shall denote full compliance with a paragraph as a whole. If deviations from the specifications are indicated, and therefore requested by the CONTRACTOR, each deviation shall be underlined and denoted by a number in the margin to the right of the identified paragraph, referenced to a detailed written explanation of the reasons

for requesting the deviation. The ENGINEER shall be the final authority for determining acceptability of requested deviations. The CONTRACTOR shall furnish equipment and/or services as specified if an exception and/or deviation is rejected. The remaining portions of the paragraph not underlined will signify compliance on the part of the CONTRACTOR with the specifications. Failure to include a copy of the marked-up specification sections, along with justification(s) for any requested deviations to the specification requirements, with the submittal shall be sufficient cause for rejection of the entire submittal with no further consideration.

G. The CONTRACTOR shall submit the preventive maintenance information package as part of the shop drawing submittal package to the ENGINEER for review and approval. **SHOP DRAWING SUBMITTAL PACKAGE WILL NOT BE APPROVED WITHOUT ACCEPTANCE OF PREVENTIVE MAINTENANCE INFORMATION.**

PART 2 - PRODUCTS

2.1 MANUFACTURERS

A. Acceptable Manufacturers:
1. Palmer of Texas, Andrews, TX.
2. Paramount.
3. Diamond Fiberglass, Victoria, TX.
4. Approved equal.

2.2 MATERIALS

A. The design, fabrication, erection, and testing of the tank shall be in strict accordance with ASTM D3299, Specification for Filament Wound Glass Fiber Reinforced Thermoset Resin Chemical Resistant Tanks, except as modified herein. The CONTRACTOR must obtain the ENGINEER'S approval for all deviations, exceptions, and substitutions to this Specification and ASTM D3299, including those which are specifically permitted subject to approval of purchaser.

B. Materials:
1. MFS Chemical Facility:
   a. Sodium hypochlorite (NaOCL) FRP tank materials shall have a Ashland Hetron 992 resin for the corrosion resistant barrier and filament winding, a double Nexus lining, and a BPO-DMA cure, unless otherwise specified on the tank drawings.
2. Membrane Filtration Facility:
   a. Backpulse FRP tank material shall be fabricated utilizing premium grade isophthalic polyester resin with a one “C” or synthetic veil, such as single Nexus 1012, in the 100 mil inner corrosion liner and premium grade

isophthalic polyester resin in the outer structural overwrap. In addition, the vessel is to receive an exterior gelcoat finish with ultraviolet inhibitors. All coatings to be applied by FRP tank manufacturer.

b. Resin shall be Premium grade vinyl ester resin as recommended by the resin manufacturer for the specific operating environment. Add antimony trioxide or pentoxide for Class I fire rating to the structural laminate only. No thixotropic agents shall be used. Manufacturers: One of the following or equal:
   1) Derakane.
   2) Ashland Hetron.
   3) Interplastic.
   4) Reichhold Dion.

3. Materials used in the manufacture shall be new stock of the best quality and shall be free from all defects and imperfections that might affect the performance of the finished product.
4. All materials shall be of the kind and quality specified and where the quality is not specified, it shall be the best of the respective kinds and suitable for the purpose intended.

2.3 MANUFACTURED UNITS

A. Fabrication:

1. MFS Chemical Facility:
   a. The FRP resin and cure system shall be suitable for continuous exposure to 12.5% sodium hypochlorite solution, 20% sodium hydroxide solution, and their reaction products.
   b. Tank shell thickness shall be calculated based on liquid levels (both operating and test conditions) at the top of the tank shell.
2. Membrane Filtration Facility:
   a. The FRP resin and cure system shall be suitable for continuous exposure to 12.5% sodium hypochlorite solution
   b. Tank shell thickness shall be calculated based on a 1.0 specific gravity fluid and on liquid levels (both operating and test conditions) at the top of the tank shell.
3. FRP tanks shall be fabricated using a four-layer laminate construction process or better.
4. After fabrication, all cut ends, holes, and abrasions of FRP shapes shall be sealed with a compatible resin coating to prevent intrusion of moisture.
5. All exposed surfaces shall be smooth and true to form.
6. Equipment shall be furnished with nameplates of stainless steel. Pertinent design, hydraulic, and mechanical data will be permanently stamped or cast into each nameplate, and shall include manufacturer and model number.
7. All exterior FRP surfaces shall have a pigmented resin for UV protection; color shall be Tnemec Desert Sands or approved equal.
8. Visual defects shall be in accordance with ASTM D2563, Level II.

B. Delivery, Storage, and Handling:

1. All systems, sub-systems, and structures shall be shop-fabricated and assembled into the largest practical size, suitable for transporting.
2. All materials and equipment necessary for the installation of the FRP tanks and appurtenances shall be stored before, during, and after shipment in a manner to prevent cracking, twisting, bending, breaking, or damage of any kind to the materials or equipment, including damage due to over exposure to the sun. Any material, which in the opinion of the ENGINEER, has become damaged as to be unfit for use, shall be promptly removed from the site of Work and the CONTRACTOR shall receive no compensation for the damaged material or its removal.
3. Identify and match-mark all materials, items, and fabrications for installation and field assembly.

2.4 COMPONENTS

A. Chemical and Backpulse Storage Tanks:

1. Design Criteria
   a. Wind Load Design: 100 mph.
   b. Live Load Design: 200 lbs per square foot.
   c. Ambient Temperature: 35° F minimum and 125° F maximum.
   d. Top Tank: Flat top.
2. Provide a vertical, cylindrical, flat top, flat bottom fiberglass storage tank.
3. MFS Chemical Facility and Membrane Filtration Facility :
   a. Provide two 24-inched hinged manways with bolted cover. One will be located on the top and the other on the side at the bottom of the tank or as shown on the Drawings.
4. Provide flanged connections for tank pipe connections, vents, etc., as shown on the Drawings. Connections shall be constructed of the same material as the tank wall with the same inner corrosion barrier. Flanged connections, as shown on the Drawings, shall be gusseted to the tank wall with 1/4-inch thick conical gussets.
5. Provide integrally molded lifting and anchoring lugs as required for lifting, transporting, and anchoring the tank without structural damage to the tank.
6. Only Type 316 stainless steel hardware shall be provided for mounting, anchoring, and connecting.
7. Provide vent for each tank, as shown on the Drawings.
8. Provide complete tank drain fittings below bottom elevation of the tank. This is to ensure total removal of liquid and any solids inside the tank. Location shall be as shown on the Drawings.

B. Internals and Accessories:

1. The CONTRACTOR shall require the tank vendor to furnish and install all internals and accessories as noted on individual tank drawings and/or as specified herein.

2. Fittings, flanged nozzles, and manways shall be of hand layup flange and FRP pipe construction. Nozzle flanges shall be of ANSI 150# style.
3. MFS Chemical Facility:

*Sight glass and valves are not included.

* a. For tanks indicated on the Drawings, the tank vendor shall furnish for CONTRACTOR installation of a clear PVC sight glass and necessary piping calibrated in gallons with diaphragm valves to be located on the bottom sight glass fitting, to shut-off the sight glass, and below the sight glass for sight glass drainage. Diaphragm valves are as specified in Section 11715, Chemical Metering Pumps and Appurtenances.
   b. Gaskets and external bolting shall be furnished for all manholes, hand-holes, and other openings which call for a blind flange or cover. Provide EPDM for testing and servicing of all tanks except sodium hypochlorite tanks. Sodium hypochlorite tanks will be provided with EPDM gaskets for testing and viton gaskets for service. At least four sets of gaskets shall be furnished; two sets for testing and two sets unused with proper protection and identification.
   c. Ladders of fiberglass reinforced plastic construction shall be provided at locations shown on tank drawings and shall include non-skid surfaces with a roof turn and be in compliance with the Code of Federal Regulations, Title 29, Chapter XVII, Part 1910 - Occupational Safety and Health Standards
4. Membrane Filtration System Facility:
   a. Gaskets and external bolting shall be furnished for all manholes, hand-holes, and other openings which call for a blind flange or cover. Provide EPDM gaskets for testing and servicing of all tanks. At least four sets of gaskets shall be furnished; two sets for testing and two sets unused with proper protection and identification.

*Ladder and handrail shall be FRP.

* b. Ladders of Type 316 stainless steel construction shall be provided at locations shown on tank drawings and shall include non-skid surfaces with a roof turn and be in compliance with the Code of Federal Regulations, Title 29, Chapter XVII, Part 1910 - Occupational Safety and Health Standards.
5. MFS Chemical Facility and Membrane Filtration System Facility:
   a. Safety railing shall be provided around the perimeter of the top of the tank. Safety railing shall be in compliance with the Code of Federal Regulations, Title 29, Chapter XVII, Part 1926 – Occupational Safety and Health Standards.
6. All steel components shall be coated in accordance with Section 09900, Painting, of these Specifications.
7. Each tank shall have a chemical identification sign and a hazardous materials identification diamond sign labeled in accordance with NFPA 704 and Section 10400, Equipment Identification Plates.

*By others.

* C. Chemical Solutions:
   1. MFS Chemical Facility:

a. The CONTRACTOR shall supply 3,200 gallons of 12.5% sodium hypochlorite solution for use in testing and start-up. After such testing is completed the CONTRACTOR shall fill the tanks before closing the Contract.

2. Membrane Filtration System Facility:

a. The CONTRACTOR shall supply 6,000 gallons of potable water for use in testing and start-up. After such testing is completed the CONTRACTOR shall fill the tanks before closing the Contract.

2.5 SPARE PARTS

A. Complete set of spare parts shall be provided for each tank as recommended by the manufacturer. A list of spare parts shall be provided with the Shop Drawings.

2.6 SHOP PAINTINGS

*Field painting, if required, is by others.

A. The CONTRACTOR shall certify, in writing, that the shop primer and coating system is compatible with the finish coating system in accordance with the Section 09900, Painting.

PART 3 - EXECUTION

*By others.

.1 INSTALLATION

A. Prior to the start of erection, tank vendor shall inspect each tank foundation for levelness, and formally notify the CONTRACTOR of the acceptance or rejection of it.

B. Provide chemical resistant anchorage devices and fasteners as specified by the tank manufacturer for securing the tank and appurtenances to the foundation and connecting accessories to tank; include threaded fasteners for concrete expansion anchors, through-bolts, and other connectors as required.

C. All field cut and drilled edges, holes, and abrasions shall be sealed with a catalyzed resin compatible with the original resin as recommended by the manufacturer. The sealing of edges shall prevent pre-mature fraying at the cut edges.

D. Install items specified as indicated and in accordance with manufacturer's instructions.

3.2 TOLERANCES

A. Tank fabrication, erection, and foundation tolerances shall be in accordance with ASTM D3299.

B. Tank nozzles (excluding manways) shall be installed within the following tolerances:

1. Projection from Outside of Tank Shell to Extreme Face of Flange: 3/16-inch.
2. Flange Bolt Hole Orientation: ±1/16-inch.

C. Tank manholes shall be installed within the following tolerances:
1. Projection from Outside of Tank Shell to Extreme Face of Flange: 1/2-inch.
2. Flange Tilt in Any Plane, Measured Across the Flange Diameter: 1/2-inch.

3.3 INSPECTIONS AND TESTS

A. Thoroughly broom sweep or wash clean inside of each tank.

*Field cleaning and testing is by others.

B. Testing: Tanks shall be tested in accordance with ASTM D3299. Any tank showing evidence of leakage during test must be emptied immediately. The source of leakage must be determined and the defect repaired prior to refilling.

C. Retain, label and submit cut-out samples of all FRP vessels to the ENGINEER for assessment of properties and laminate construction.

++ END OF SECTION ++

BUESING CORP.
Highway / Heavy Construction
AZ Lic. # A-ROC200645

"Simply the Best"

Date: 4/1/2022

To: McCarthy Building Companies
Attn: Reed Peterson
Phone: -
Fax:

QUOTE #5

Bid Date: March 25, 2022
Project No:

Project: CHANDLER RWIF
Location: 955 East Queen Creek Road
City: Chandler, Az

We are pleased to submit the following cost estimate:

Pricing Good Through 09/30/2023 (See Standard Provisions)

QUANTITY	UNIT	DESCRIPTION	PRICE / UNIT	TOTAL
100	TON	3" - 6" PINK CORAL RIP RAP DELIVERED IN END DUMPS	$ 44.00	$ 4,400.00
100	TON	4" - 8" YAVAPAI CORAL RIP RAP DELIVERED IN END DUMPS	$ 44.00	$ 4,400.00
	HR	BELLY DUMP TRUCK RENTAL (THRU 12/31/2022)	$ 130.00	$
	HR	SUPER TRUCK RENTAL (THRU 12/31/2022)	$ 135.00	$
			$	$

Standard Provisions

SUFFICIENT QUANTIIES PER DELIVERY TO INSURE 4 HOUR MINIMUM PER TRUCK

Prices do not include weekend, holiday, off hour, or overtime shipments.
Additional charges may apply if any of these conditions occur. Unless otherwise noted dirt prices exclude permits, loading, dust control and sweeping.
ALL PRICES ASSUME THAT BUESING CORP'S STANDARD INSURANCE IS ACCEPTABLE
Payment due on or before the 25th day of the month for work completed or materials delivered in the month prior. No retention withheld.

ALL PRICING WILL BE HONORED THROUGH THE DATE SPECIFIED ABOVE PROVIDED THAT WE RECEIVE A P.O., P.A., OR LETTER OF INTENT WITHIN 29 DAYS. If JOB AWARD IS LONGER THAN 29 DAYS PLEASE NOTIFY US WITHIN THE 29 DAYS, AND WE WILL NEGOTIATE WITH MATERIAL SUPPLIERS TO ALLOW THE PRICE TO BE HONORED

Special Provisions

HOURLY TRUCK RENTAL REQUIRES A 4 HOUR MINIMUM PER TRUCK PER SHIFT, PLUS 1/2 HOUR TRAVEL PER TRUCK PER SHIFT.

If These Terms And Conditions Are Acceptable Please Sign This Form And Fax It Back To The Number Below

ACCEPTANCE OF PROPOSAL

The above prices, specifications and conditions are satisfactory and are hereby accepted. You are authorized to do the work as specified, provided there is an understanding between parties that the prime and / or subcontractor must receive an official award. If an official award, contract or subcontract is not consummated this proposal shall become null and void.

Company Name: McCarthy Building Companies
Authorized Person's Signature:_____ Date:_____.



and GOOD LUCK !!!

Respectfully Submitted: *Cecil Wallace*



3045 S 7th Street
(602) 845-3133

Phoenix, Arizona 85040
Cell: (602) 799-5702

Peterson, Reed

From: Frank Ruegsegger <ftruegsegger@gmail.com>
Sent: Friday, March 25, 2022 2:17 PM
To: Peterson, Reed
Subject: Re: Chandler RWIF - 90% GMP - Aggregate/Trucking

Reed - I can only quote super 16's @ $115.00 per hour. That is a demo truck with a 21tn/12yrd capacity.

Hope this helps.

On Fri, Mar 25, 2022 at 2:13 PM Peterson, Reed <RPeterson@mccarthy.com> wrote:

> Frank,
>
> Thanks for getting back to me. Forgot to add at the bottom the truck rentals. Could we get an hourly rate for truck rentals on an end dump and belly dump
>
> Thanks,
>
> **Reed Peterson**
>
> Sr. Project Estimator
>
> Southwest Division
>
> McCarthy Building Companies, Inc.
>
> 6225 North 24th Street, Suite 200
>
> Phoenix, AZ 85016-2037
>
> M (602) 695-2329
>
> **From:** Frank Ruegsegger <ftruegsegger@gmail.com>
> **Sent:** Friday, March 25, 2022 8:50 AM
> **To:** Peterson, Reed <RPeterson@mccarthy.com>
> **Subject:** Re: Chandler RWIF - 90% GMP - Aggregate/Trucking

MAG ABC (GRS)	$14.65 per ton, delivered	2,950 TN
Asphalt Millings (B)	$115 per hour + $7.50 per ton. Estimated round time 0.58	15.5 TN Not a full load.
Pea Gravel SRMG)	$15.60 per ton, delivered. (GRS or	100 TN
Sand (GRS)	$15.65 per ton, delivered.	125 TN
Haul & Dump – Asphalt (JS)	$160.00 + $75.00 dump fee.	75 LD
Haul & Dump – Pipe (JS) "For concrete pipe"	$160.00 + $75.00 dump fee.	6 LD
Haul & Dump – Concrete fee. (JS)	$160.00 + $75.00 dump	11 LD
Haul & Dump – Debris Per ton dump fee. (WBC) No way to estimate time in/out.	$115.00 per hour + $46.75	12 LD
Haul & Dump – Spoils (SRMG)	$170.00 + $35.00 dump fee.	312 LD

All per load quotes, must be loaded out of a stockpile, with a production size loader. (NO WAIT) Otherwise hourly at $115.00 per hour, + dump fees.

All quotes are on an as available basis.

Unfortunately we can not give good through dates at this time. Suppliers all over town, have stopped honoring written quotes

and pricing has been changing overnight without notice. Another factor is fuel.. We, like everyone, experienced an unbelievable increase in fuel pricing, in what seemed like overnight.

Feel free to call me with any questions or concerns.

Any given quote could change without prior notice.

Fuel surcharge of 2% will be added to above quote, if fuel goes up $.020 per gallon

from the date give.

All aggregate quotes are 100 ton minimum unless otherwise specified.

Quotes do not reflect nights or weekend work, resulting in an additional

$10.00 per hour, plus dump fees/materials. 4 hour minimum on all trucks ordered. In the event a supplier of a quoted job runs out of material,

Matt Brown Trucking will not be liable and additional cost will be passed on to the receiving Contractor, "if an alternative source is required"

Best Regards,

Frank.

Matt Brown Trucking Inc.

frank@mattbrowntrucking.com

623.329.1392 Cell

602.499.3151 Dispatch

CAUTION: This email originated from outside of the organization. Do not click links or open attachments unless you recognize the sender and know the content is safe.

***** This electronic mail message, including attachments, is intended only for the person or entity to which it is addressed and may contain confidential and/or privileged material. Any unauthorized use, review, disclosure, distribution, or actions taken in reliance on the contents of this information, is prohibited. If you received this e-mail in error and are not the intended recipient, please notify me immediately by telephone or reply e-mail and destroy all copies of the original message. *****

CAUTION: This email originated from outside of the organization. Do not click links or open attachments unless you recognize the sender and know the content is safe.

Capital Pump & Equipment

4050 W. Saturn Way, Chandler, AZ 85226
Phone: 480-626-5257 Email: Sales@cpepumps.com

Quote #: CP22-582

Job Name: Chandler Airport WTP - 10 MGD Bypass

Customer: McCarthy Building Companies

Location: Chandler, AZ

Contact: Reed Peterson
Phone: 602-695-2329
Email: rpeterso□□ □cc□rth□□co□

Rental Equipment — **RATES**

Qty	Unit	Rental Period	Description	Day	Week	4 Week	Total
2	EA	1 Week	Pump, Pioneer 12" PP1212S17	$ 919.00	$ 2,757.00	$ 8,271.00	$ 5,514.00
2	EA	1 Week	Pump, Pioneer 6" PP66S12	$ 263.00	$ 789.00	$ 2,367.00	$ 1,578.00
1	EA	1 Week	Fuel Cube, 500 Gallon Diesel	$ 75.00	$ 225.00	$ 675.00	$ 225.00
4	EA	1 Week	Spillberm	$ 16.67	$ 50.00	$ 150.00	$ 200.00
400	FT	1 Week	Pipe, 18" HDPE SDR26	$ 0.40	$ 1.20	$ 3.60	$ 480.00
2	EA	1 Week	Suction Stinger, 16" HDPE SDR17	$ 50.00	$ 150.00	$ 450.00	$ 300.00
2	EA	1 Week	Hose, 6" x 20' Suction	$ 37.00	$ 111.00	$ 333.00	$ 222.00
2	EA	1 Week	Wye, 18" x 12" x 12" HDPE	$ 50.00	$ 150.00	$ 450.00	$ 300.00
2	EA	1 Week	Valve, 12" Check/Gate	$ 50.00	$ 150.00	$ 450.00	$ 300.00
2	EA	1 Week	Valve, 6" Check/Gate	$ 18.00	$ 56.00	$ 168.00	$ 112.00
1	LOT	1 Week	Elbows, Fittings and Adapters	$ 200.00	$ 600.00	$ 1,800.00	$600.00

QUANTITIES ARE ESTIMATES
QUANTITIES USED WILL BE BILLED

CPE hourly pump watch: $65/hour

CPE bypass pump system desgined to handle peak flows of 10 MGD with 100% pump redundancy

CPE confined space crew to install sewer suction plug

Estimated fuel burn @ peak flow rate: 5 Gallons per hour

1 Week Rental Total	$9,831.00
Delivery	$725.00
Pick-up	$725.00
Estimated Install Labor	$7,450.00
Estimated Removal Labor	$3,500.00

Quote does not include applicable taxes

ESTIMATE TOTAL - **$22,231.00**

Prepared by: Tyler Larkins

Accepted by:

Date: Monday, April 4, 2022

Date:

Subject to Terms and Conditions on Page 2

Estimate valid for 30 days from issuance date

Capital Pump & Equipment

4050 W. Saturn Way, Chandler, AZ 85226
Phone: 480-626-5257 Email: Sales@cpepumps.com

Terms, Conditions & Specifications

1. Customer agrees to abide by the terms and conditions on the purchase or rental contract.

2. Quantities are estimates and system is designed with information supplied by the customer. Any additional requirements will incur additional charges.

3. Customer responsible for all permits, traffic control, road crossings, etc.

4. Customer responsible for all FUEL & PM SERVICE during pump rentals.

5. Pump rate is based on **8 hour day, 48 hour week, 192 hour 4 week.**

6. Overtime Charges, if applicable, are Computed: (Monthly Rate / 192) X .5 = O/T Charge Per Hour

7. Labor rate is for normal working hours. Weekend or nighttime will incur additional charges.

8. Rental begins when equipment leaves CPE branch. Pumping systems are on rent during installation.

9. If Water Bridges are rented, they are placed under customer's direction. Customer accepts sole responsibility for placement, ongoing maintenance, and suitability for use in each specific traffic location.

JOB SPECIFIC TERMS, CONDITIONS & SPECIFICATIONS

Corporate Offices:
3636 S. 43rd Avenue
Phoenix, AZ 85009
Phone: 602-278-7777
Fax: 602-442-6905
www□r□o□□□ □ter□s□et

Terms and Conditions of Sale

Additives
Hot / Chilled Water - $1.00 per cubic yard
Nitrogen Cooling - $9.50 per cubic yard
Non-Chloride Accelerator - $1.50 per unit
Recover - $2.00 per 1/2 Hour

Fiber
Micro Fiber - $7.50 per pound
Macro Fiber (Structural) - Priced as Quoted

Color
Standard Liquid Color - See mix detail for per yard pricing
Color Washout - $25.00 per load

Delivery
Fuel Surcharge - $15.00 per load
Wash Out System Buckets - $25.00 per load (requested at time of order)
Standby Charges - $1.50 per minute beyond 6 minutes per cubic yard
Short Load Charges - 6 yards or less $200.00 per load
Environmental Fee - $25.00 per load

Weekend Delivery - $50.00 per load
Plant Opening Charge - $500.00/hr, 4 hour minimum
Sunday / Holiday Opening - $750.00/hr, 4 hour minimum

All order backs/split loads under 11 yds on one order are subject to Short Load Charges.

Concrete Pricing subject to change in the event of cement / fly ash allocations and/or unanticipated cement / fly ash price increases.

All materials are produced in conformance with ACI / ASTM Standards.

Contractor is responsible to provide safe access to the point of delivery.

Arizona Materials accepts no responsibility for damages to any curb and beyond the curb line.

It is Contractors responsibility to contact Arizona Materials Quality Control Department with any concrete issues/concerns no later than 48 Hours after placement.

Arizona Materials

Customer Service: 602-278-7777
Fax: 602-278-3077
3636 S 43rd Ave
Phoenix, AZ 85009

PROJECT QUOTATION

CUSTOMER:	McCarthy Building Companies, Inc.	**PROJECT:**	Interconnect Facility GMP 2
Contact:	Peterson Reed	Address:	Chandler & Airport Campus
Phone:	602-695-2329	City,State,Zip:	CHANDLER, AZ, 8500
Fax:		Quote ID:	3481 (21)
Email:	rpeterson@mccarthy.com	Total Qty:	6,640 CYD (Estimated)

Concrete Products

Qty	Description	Mix Id	Price	Comments
2900	6000 PSI W/Ash	16000	$152.50	6000 PSI .40 W/C RATIO SPEC
8	6000 PSI Flowable	16050	$157.50	6000 PSI .40 W/C RATIO SPEC FLOW
8	MAG AAA, 5000 PSI	15004	$148.50	5000 PSI .40 W/C RATIO SPEC
2800	5000 PSI, MAG AAA Flowable	15054	$153.50	5000 PSI .40 W/C RATIO SPEC FLOW
8	5000 PSI 1" Rock W/Ash	15000	$148.50	CLASS A 5000 .45 W/C RATIO
8	5000 PSI Flowable	15050	$153.50	CLASS A 5000 .45 W/C RATIO FLOW
144	MAG-A 3000 PSI	13004	$124.50	CLASS B 3000 .55 W/C RATIO SPEC
8	3000 PSI MAG A Flowable	13054	$129.50	CLASS B 3000 .55 W/C RATIO SPEC FLOW
8	2000 PSI MAG C	12004	$120.50	
8	2000 PSI, MAG C Flowable	12054	$125.50	
60	1/2 Sack ABC Lean Slurry Mix (CLSM)	12011	$100.50	
600	1 Sack ABC Slurry, CLSM	12012	$108.50	
80	1.5 Sack ABC lean Slurry	12013	$117.50	
	Chilled Water (Per Per Yard)		$0.00	
	Hot Water (Per Per Yard)		$1.00	
	SHORTLOAD CHARGES (Per Each)		$200.00	
	Nitro (Per Per Yard)		$9.50	
	Fuel Surcharges (Per Each)		$15.00	
	Environmental (Per Each)		$25.00	

Add-On Products

Price Increase and Quote Expiration

Concrete pricing subject to change in the event of cement / fly ash allocations and / or unanticipated cement / fly ash price increases.	Price Increase #1 : Add $8.00/CYD on 10/01/2022 Price Increase #2 : Add $8.00/CYD on 06/01/2023 **All prices expire on quoted expiration date: 01/01/2024**

Charges and Fees

Arizona Materials accepts no responsiblity for any damage to curb and beyond curb line. It will be Buyers reponsibility to contact Arizona Materials Quality Control Department with any concrete issue/concerns within 48 hours after placement. Buyer is responsible to provide safe access to point of delivery. All materials are produced in conformance with ACI / ASTM standards. Mixes quoted below, unless otherwise stated, conform to no specific water cement ratio, minimum sack content, shrinkage, temperature requirement, or the plans and specifications of this project.
All colored concrete loads have a 3 yard minimum.
Arizona Materials cannot guarantee compressive strengths of 5000 PSI or below for loads less than 3 yards.
5000 PSI or above must be 5 yards or more to quarantee compressive strength.

Payment is due and payable on or before the 15th day of the month following to receive 2% discount. Account must be current in full to be eligible to apply discount. A service charge not to exceed the maximum allowed by law applies on unpaid invoice amounts beginning the 1st day of the month following due date and daily thereafter until paid in full. Should litigation be commenced to enforce payment, the prevailing party is entitled to reimbursement of reasonable attorney fees and court costs.

Buyer has 30 days to validate quote with P.O. , signing issued quote, or written verification.

Prepared and Submitted By:	Acceptance (void if not accepted before 04/03/2022)

Name:	Frank Campbell	Signature _____	Date _____
Date:	03/04/2022	Print Name _____	
Phone:	6027217259	Title _____	
Fax:		Company _____	
Email:	fcampbell@azmatl.com		

GeoSupply, Inc.

888 W. Illini Street
Phoenix, AZ 85041

Phone #	602-305-8094

QUOTE

85749

Date	3/28/2022

Name/Address:

McCarthy Building Companies, INC
6225 N. 24th Street #200
Phoenix, AZ 85016

Ship To:

McCarthy Building Companies, INC
6225 N. 24th Street #200
Phoenix, AZ 85016

Project	Quoted To:	FOB	Terms
S1000/equal	Reed Peterson	GeoSupply	Net 30

Item	Description	Qty	U/M	Unit Price	Total
GF12NW-15	GeoFabric 12NW 15' X 300' NW Geotextile (500 SY)	2	RL	1,115.00	2,230.00

TOTAL	$2,230.00

Scope	VDC MH Rate	VDC Hourly Rate	Total LF of Pipe	VDC Budget
Yard Pipe	0.05	$ 115.00	3037	$ 17,462.75
~~Process Pipe~~	~~0.13~~	~~$ 115.00~~	~~0~~	~~$ -~~

J P C I SERVICES

Joseph Painting Company, Inc.
4702 E. Virginia Street • Mesa, Arizona 85215-9101
(480) 986-1212 • Fax (480) 380-4461
License No. ROC197873 KE AZ • ROC199485 KE AZ • ROC242450 KE AZ • ROC218119 A AZ
ROC107144 CR34 AZ • CA Lic 280286 C-33 & A • NV Lic N0. 0058702-A15, No.0058579-C-4

PROPOSAL

TO: Nicole Azuri
McCarthy
PHONE:
FAX:
DATE: March 24, 2022
CELL:

RE: Chandler Reclaimed Water Interconnect Facility Paint and Coatings

We propose to complete the following work as described below;

ITEM # 1 **:** Raw water pump station perimeter wall painting.
Item # 1 Amount $11,895.00

ITEM # 2 **:** Raw water pump station gates painting.
Item # 2 Amount $2,240.00

ITEM # 3 **:** Raw water pump station above ground piping painting.
Item # 3 Amount $30,673.00

ITEM # 4 **:** Raw water pump station wet well piping painting.
Item # 4 Amount $18,312.00

ITEM # 5 **:** Raw water pump station electrical canopy structure and decking.
Item # 5 Amount $9,266.00

ITEM # 6 **:** Raw water pump station electrical equipment painting.
Item # 6 Amount $8,400.00

ITEM # 7 **:** Membrane facility basins (4) and CIP tank coating. Sherwin Williams system, Steel seam FT910, Macropoxy 5000 and Poly-Cote 115. Recommended alternate Item #27
Item # 7 Amount $888,000.00

ITEM # 8 **:** Membrane facility Canopy structure and decking painting.
Item # 8 Amount $54,584.00

ITEM # 9 **:** Membrane facility above ground piping painting.
Item # 9 Amount $52,580.00

ITEM # 10 **:** Membrane facility pumps painting.
Item # 10 Amount $6,000.00

ITEM # 11 **:** Membrane facility bridge Crain rails painting.
Item # 11 Amount $6,840.00

ITEM # 12 **:** Self cleaning strainers above ground piping and strainers painting.
Item # 12 Amount $35,424.00

ITEM # 13 **:** Self cleaning strainers canopy structure and decking painting.
Item # 13 Amount $20,820.00

ITEM # 14 : AWRF modified chlorine contact piping painting.
Item # 14 Amount $5,040.00

ITEM # 15 : Blower building roll up door and man door painting.
Item # 15 Amount $1,450.00

ITEM # 16 : Blower building fire piping painting.
Item # 16 Amount $13,104.00

ITEM # 17 : MFS chemical facility sodium hypochlorite piping painting.
Item # 17 Amount $9,840.00

ITEM # 18 : CIP chemical facility piping painting.
Item # 18 Amount $25,088.00

ITEM # 19 : Chemical facility canopy structure and decking painting.
Item # 19 Amount $41,067.00

ITEM # 20 : ACH facility above ground piping painting.
Item # 20 Amount $5,704.00

ITEM # 21 : ACH facility canopy structure and decking painting.
Item # 21 Amount $17,577.00

ITEM # 22 : Electrical building doors painting.
Item # 22 Amount $800.00

ITEM # 23 : Coat interior of 2- 5' dia. By 20' deep manholes with Sewer Shield 150.
Item # 23 Amount $37,480.00

ITEM # 24 : Provide and install 1- 5' dia by 20' deep Sewer Shield Composites manhole.

Item # 24 Amount $21,000.00

ITEM # 25 : 3rd party NACE III inspections.
Item # 25 Amount $58,992.00

ITEM # 26 : Bond 2.5%
Item # 26 Amount $34,554.40

ITEM # 27 : Membrane facility basins (4) and CIP tank coating. Tnemec series 215 ML/22 mat reinforced epoxy mortar lining system, $488,400.00

Item # 27 Amount .....

Excluded; P.V.C. liner 09910, below grade waterproofing, exposed exterior above grade concrete, No FRP tank painting, No poly tank painting,

TOTAL PROPOSAL AMOUNT: $1,416,730.40

***TPT TAX Paid on Materials at point of Purchase.**

The above proposal amount is based on a standard wages, 40 hours per week work schedule. Extended hours, weekend holiday work and Davis bacon wages will be an add to the contract amount. All work orders need to give JPCI Services a minimum of two weeks notice before the start of the project. Price valid for 90 days from date of proposal.

The cost of bonds, traffic control, bypass and permit fees are excluded from the above proposal. Please do not hesitate to call should you need more information.

Sincerely,

Larry Nuciforo
Estimator
Nace CCI Level 3 25089

If you accept this proposal, please complete the information requested below and fax to (480)380-4461, along with a

Accepted by: _____ Phone: _____

Job Superintendent: _____ Phone: _____

Estimated Start Date: _____ PO/Contract #: _____

Please notify Beckey Durfee at (480)986-1212 if there is a change in the start date.

Chandler RWIF 90% GMP
Yard Pipe Take-off - DIP & PVC & Copper
3/8/2022 Rev0

***THIS QUOTATION IS VALID FOR ACCEPTANCE WITHIN 30 DAYS OF THE DATE OF QUOTATION**
***IF SIGNED PURCHASE ORDER AGREEMENT IS ACCEPTABLE TO BOTH PARTIES WITHIN 30 DAYS OF QUOTATION, PRICES WILL BE HELD FIRM FOR 6 MONTHS FROM THE DATE OF THIS BID FOR ALL DELIVERIES TO THE JOBSITE**
***ALL MATERIAL MUST BE RELEASED AT ONE TIME**
*** ANY ADDITIONAL MATERIAL OUTSIDE OF CONTRACT WILL BE PRICED AT CURRENT MARKET VALUE**
***PAYMENT TERMS NET 30**

***SURCHARGE ESTIMATES ARE PRESENTED FOR INFORMATION ONLY AND TO ASSIST IN ESTIMATING THE POTENTIAL IMPACT IT IS THE RESPONSIBILITY OF THE CONTRACTOR TO COVER ANY AND ALL POTENTIAL SURCHARGE COSTS**
1 EA - SCRAP & FUEL SURCHARGE ESTIMATE - APRIL 2022 $150/TON ESTIMATE - $10,200.00

Control	System	Description	Qty	UM	Unit $	Total$	Lead Times	Notes
1	YP - Demo	Remove - Drain-02" PVC Cap	2	EA	$ 10.00	$ 20.00		SCH 80 PVC
2	YP - Demo	Remove - PVC Line-01.5" Cap	2	EA	$ 5.00	$ 10.00		SCH 80 PVC
3	YP - Demo	Remove - PW-08" PVC Cap	4	EA	$ 130.00	$ 520.00		SCH 80 PVC
4						**$ 550.00**		
5								
6	Relocation	EBP-16" DIP .Pipe, TR-Flex Restrained	36	LF	$ 154.00	$ 5,544.00		P401 LINED DIP
7	Relocation	EBP-16" DIP .Pipe, Spool 8'-0" FLxFL	4	EA	$ 3,749.00	$ 14,996.00		
8	Relocation	EBP-16" DIP Bend, 45 MJ	8	EA	$ 1,474.00	$ 11,792.00		
9	Relocation	EBP-16" DIP Cap w/ 2" Tap (Testing)	4	EA	$ 291.00	$ 1,164.00		
10	Relocation	EBP-16" DIP Solid Sleeve MJ	4	EA	$ 1,384.00	$ 5,536.00		
11	Relocation	EBP-16" DIP x Megalug & Accessory Kit	24	EA	$ 357.00	$ 8,568.00		
12	Relocation	EBP-24" DIP .Pipe, TR-Flex Restrained	18	LF	$ 271.00	$ 4,878.00		
13	Relocation	EBP-24" DIP .Pipe, Spool 8'-0" FLxFL	2	EA	$ 6,268.00	$ 12,536.00		
14	Relocation	EBP-24" DIP Bend, 45 MJ	4	EA	$ 2,822.00	$ 11,288.00		
15	Relocation	EBP-24" DIP Cap w/ 2" Tap (Testing)	2	EA	$ 652.00	$ 1,304.00		
16	Relocation	EBP-24" DIP Solid Sleeve MJ	2	EA	$ 2,591.00	$ 5,182.00		
17	Relocation	EBP-24" DIP x Megalug & Accessory Kit	12	EA	$ 734.00	$ 8,808.00		
18	Relocation	Detectable Marking Tape - 1000'	1	EA	$ 65.00	$ 65.00		
19	Relocation	Polywrap	4	LF	$ 1.10	$ 4.40		
20	Relocation	10 Mil Tape - 100'	1	EA	$ 5.00	$ 5.00		
21	Relocation	Tracer Wire, #14 THWN Insulated Copper, 500 LF	1	EA	$ 107.00	$ 107.00		
22						**$ 91,777.40**		
23								
24	Chlorine Sampler	Chlorine Sampler-01.0" CPVC .Pipe SCH.80	203	LF	$ 3.00	$ 609.00		SCH 80 CPVC
25	Chlorine Sampler	Chlorine Sampler-01.0" CPVC .Pipe Coupling (divide total length by 20' typ.	4	EA	$ 5.00	$ 20.00		
26	Chlorine Sampler	Chlorine Sampler-01.0" CPVC Bend, 45, SxS	2	EA	$ 7.00	$ 14.00		
27	Chlorine Sampler	Chlorine Sampler-01.0" CPVC Bend, 90, SxS	7	EA	$ 5.00	$ 35.00		
28	Chlorine Sampler	Chlorine Sampler-01.0" CPVC Cap	4	EA	$ 10.00	$ 40.00		
29	Chlorine Sampler	Detectable Marking Tape - 1000'	1	EA	$ 65.00	$ 65.00		
30	Chlorine Sampler	CPVC Primer & Glue	1	EA	$ 84.00	$ 84.00		
31						**$ 867.00**		
32								
33	CIP Tank Drain - 04"	Drain-04" DIP .Pipe, TR-Flex Restrained	48	LF	$ 63.00	$ 3,024.00		P401 LINED DIP
34	CIP Tank Drain - 04"	Drain-04" DIP .Pipe, Spool 8'-0" FLxPE	1	EA	$ 909.00	$ 909.00		
35	CIP Tank Drain - 04"	Drain-04" DIP Bend, 45 MJ	2	EA	$ 234.00	$ 468.00		
36	CIP Tank Drain - 04"	Drain-04" DIP Bend, 90 MJ	1	EA	$ 253.00	$ 253.00		
37	CIP Tank Drain - 04"	Drain-04" DIP Blind Flange w/ 2" Tap (Testing)	1	EA	$ 89.00	$ 89.00		
38	CIP Tank Drain - 04"	Drain-04" DIP Cap w/ 2" Tap (Testing)	1	EA	$ 27.00	$ 27.00		
39	CIP Tank Drain - 04"	Drain-04" DIP Solid Sleeve MJ	1	EA	$ 234.00	$ 234.00		
40	CIP Tank Drain - 04"	Drain-04" DIP Wye, 04"x04" MJ	1	EA	$ 541.00	$ 541.00		
41	CIP Tank Drain - 04"	Drain-04" DIP x Bolt, Nut, Gasket Kit - (Testing)	1	EA	$ 26.00	$ 26.00		
42	CIP Tank Drain - 04"	Drain-04" DIP x LinkSeal, SS316	1	EA	$ 217.00	$ 217.00		
43	CIP Tank Drain - 04"	Drain-04" DIP x Megalug & Accessory Kit	12	EA	$ 61.00	$ 732.00		
44	CIP Tank Drain - 04"	Detectable Marking Tape - 1000'	1	EA	$ 65.00	$ 65.00		
45	CIP Tank Drain - 04"	Polywrap	48	LF	$ 0.40	$ 19.20		
46	CIP Tank Drain - 04"	10 Mil Tape - 100'	1	EA	$ 3.00	$ 3.00		
47	CIP Tank Drain - 04"	Tracer Wire, #14 THWN Insulated Copper, 500 LF	1	EA	$ 107.00	$ 107.00		
48						**$ 6,714.20**		
49								
50	CIP Tank Drain - 12"	Drain-12" DIP .Pipe, TR-Flex Restrained	29	LF	$ 106.00	$ 3,074.00		P401 LINED DIP
51	CIP Tank Drain - 12"	Drain-12" DIP .Pipe, Spool 6'-0" FLxPE	1	EA	$ 1,641.00	$ 1,641.00		
52	CIP Tank Drain - 12"	Drain-12" DIP Bend, 90 MJ	1	EA	$ 986.00	$ 986.00		
53	CIP Tank Drain - 12"	Drain-12" DIP Blind Flange w/ 2" Tap (Testing)	1	EA	$ 338.00	$ 338.00		
54	CIP Tank Drain - 12"	Drain-12" DIP x Bolt, Nut, Gasket Kit - (Testing)	1	EA	$ 120.00	$ 120.00		
55	CIP Tank Drain - 12"	Drain-12" DIP x LinkSeal, SS316	1	EA	$ 367.00	$ 367.00		
56	CIP Tank Drain - 12"	Drain-12" DIP x Megalug & Accessory Kit	2	EA	$ 199.00	$ 398.00		
57	CIP Tank Drain - 12"	Detectable Marking Tape - 1000'	1	EA	$ 65.00	$ 65.00		
58	CIP Tank Drain - 12"	Polywrap	29	LF	$ 0.40	$ 11.60		
59	CIP Tank Drain - 12"	10 Mil Tape - 100'	1	EA	$ 5.00	$ 5.00		
60	CIP Tank Drain - 12"	Tracer Wire, #14 THWN Insulated Copper, 500 LF	1	EA	$ 107.00	$ 107.00		
61						**$ 7,112.60**		
62								
63	Drain - 02"	Drain-02" Floor Drain	2	EA	$ 125.00	$ 250.00		SCH 80 PVC
64	Drain - 02"	Drain-02" PVC Bend, 11.25, SxS	1	EA	$ -	$ -		
65	Drain - 02"	Drain-02" PVC Bend, 45, SxS	7	EA	$ 11.00	$ 77.00		
66	Drain - 02"	Drain-02" PVC Cap	6	EA	$ 10.00	$ 60.00		
67	Drain - 02"	Drain-02" PVC Cross	1	EA	$ 33.00	$ 33.00		
68	Drain - 02"	Drain-02" PVC Link Seal, SS16	2	EA	$ 117.00	$ 234.00		
69	Drain - 02"	Drain-02" PVC Manhole Coating Repair	1	EA	$ -	$ -		
70	Drain - 02"	Drain-02" PVC SDR26	187	LF	$ 4.00	$ 748.00		
71	Drain - 02"	Drain-02" PVC Wye	3	EA	$ 39.00	$ 117.00		
72	Drain - 02"	Drain-02" Sewer Cleanout Frame & Cover, MAG 441	3	EA	$ 132.00	$ 396.00		
73	Drain - 02"	Detectable Marking Tape - 1000'	1	EA	$ 65.00	$ 65.00		
74	Drain - 02"	CPVC Primer & Glue	1	EA	$ 67.00	$ 67.00		
75						**$ 2,047.00**		
76								
77	Turbidity Analyzer Panel Drain - 0	Drain-04" DIP .Pipe, TR-Flex Restrained	80	LF	$ 63.00	$ 5,040.00		P401 LINED DIP
78	Turbidity Analyzer Panel Drain - 0	Drain-04" DIP .Pipe, Spool 8'-0" FLxPE	2	EA	$ 909.00	$ 1,818.00		
79	Turbidity Analyzer Panel Drain - 0	Drain-04" DIP Bend, 45 MJ	2	EA	$ 234.00	$ 468.00		
80	Turbidity Analyzer Panel Drain - 0	Drain-04" DIP Bend, 90 MJ	3	EA	$ 253.00	$ 759.00		
81	Turbidity Analyzer Panel Drain - 0	Drain-04" DIP Blind Flange w/ 2" Tap (Testing)	2	EA	$ 89.00	$ 178.00		
82	Turbidity Analyzer Panel Drain - 0	Drain-04" DIP Solid Sleeve MJ	1	EA	$ 234.00	$ 234.00		
83	Turbidity Analyzer Panel Drain - 0	Drain-04" DIP Wye, 04"x04" MJ	1	EA	$ 541.00	$ 541.00		
84	Turbidity Analyzer Panel Drain - 0	Drain-04" DIP x Bolt, Nut, Gasket Kit - (Testing)	2	EA	$ 26.00	$ 52.00		
85	Turbidity Analyzer Panel Drain - 0	Drain-04" DIP x LinkSeal, SS316	1	EA	$ 217.00	$ 217.00		
86	Turbidity Analyzer Panel Drain - 0	Drain-04" DIP x Megalug & Accessory Kit	14	EA	$ 61.00	$ 854.00		
87	Turbidity Analyzer Panel Drain - 0	Detectable Marking Tape - 1000'	1	EA	$ 65.00	$ 65.00		
88	Turbidity Analyzer Panel Drain - 0	Polywrap	2	LF	$ 0.40	$ 0.80		
89	Turbidity Analyzer Panel Drain - 0	10 Mil Tape - 100'	6	EA	$ 5.00	$ 30.00		
90	Turbidity Analyzer Panel Drain - 0	Tracer Wire, #14 THWN Insulated Copper, 500 LF	6	EA	$ 107.00	$ 642.00		
91						**$ 10,898.80**		
92								
93	Drain - 04"	Drain-04" CPVC .Pipe SDR-26	33	LF	$ 21.00	$ 693.00		SCH 80 CPVC
94	Drain - 04"	Drain-04" CPVC .Pipe Coupling (divide total length by 20' typ.)	2	EA	$ 33.00	$ 66.00		
95	Drain - 04"	Drain-04" CPVC Bend, 45, SxS	2	EA	$ 54.00	$ 108.00		
96	Drain - 04"	Drain-04" CPVC Bend, 90, SxS	1	EA	$ 66.00	$ 66.00		
97	Drain - 04"	Drain-04" CPVC Cap	1	EA	$ 43.00	$ 43.00		
98	Drain - 04"	Drain-04" CPVC Wye	1	EA	$ 231.00	$ 231.00		
99	Drain - 04"	Drain-04" Sewer Cleanout Frame & Cover, MAG 441	1	EA	$ 113.00	$ 113.00		

Drain - 04"	Detectable Marking Tape - 1000'	1	EA	$	65.00	$	65.00	
Drain - 04"	CPVC Primer & Glue	1	EA	$	84.00	$	84.00	
						$	**1,469.00**	
Drain - 06"	Drain-06" CPVC .Pipe SDR-26	90	LF	$	40.00	$	3,600.00	SCH 80 CPVC
Drain - 06"	Drain-06" CPVC .Pipe Coupling (divide total length by 20' typ.)	4	EA	$	77.00	$	308.00	
Drain - 06"	Drain-06" CPVC Bend, 90, SxS	2	EA	$	131.00	$	262.00	
Drain - 06"	Drain-06" CPVC Link Seal, SS16	1	EA	$	217.00	$	217.00	
Drain - 06"	Drain-06" CPVC Tee, 06"' x 03"	2	EA	$	285.00	$	570.00	
Drain - 06"	Drain-06" PVC Bend, 45, SxS	2	EA	$	166.00	$	332.00	
Drain - 06"	Drain-06" PVC Cap	3	EA	$	140.00	$	420.00	
Drain - 06"	Drain-06" PVC Reducer, 06"x04"	1	EA	$	174.00	$	174.00	
Drain - 06"	Drain-06" PVC Wye	1	EA	$	316.00	$	316.00	
Drain - 06"	Detectable Marking Tape - 1000'	1	EA	$	65.00	$	65.00	
Drain - 06"	CPVC Primer & Glue	1	EA	$	84.00	$	84.00	
						$	**6,348.00**	
Membrane Backpulse Drain - 24"	Drain-24" DIP .Pipe, TR-Flex Restrained	81	LF	$	271.00	$	21,951.00	P401 LINED DIP
Membrane Backpulse Drain - 24"	Drain-24" DIP .Pipe, Spool 5'-0" FLxPE	4	EA	$	3,686.00	$	14,744.00	
Membrane Backpulse Drain - 24"	Drain-24" DIP Bend, 90 MJ	1	EA	$	3,804.00	$	3,804.00	
Membrane Backpulse Drain - 24"	Drain-24" DIP Bend, Tee 24"x24" MJ	3	EA	$	4,547.00	$	13,641.00	
Membrane Backpulse Drain - 24"	Drain-24" DIP Blind Flange w/ 2" Tap (Testing)	4	EA	$	1,520.00	$	6,080.00	
Membrane Backpulse Drain - 24"	Drain-24" DIP Solid Sleeve MJ	6	EA	$	2,591.00	$	15,546.00	
Membrane Backpulse Drain - 24"	Drain-24" DIP Wall Pipe, 1'-8" FLxMJ w/ Weep Ring	2	EA	$	4,925.00	$	9,850.00	
Membrane Backpulse Drain - 24"	Drain-24" DIP Waterstop Gasket	1	EA	$	56.00	$	56.00	
Membrane Backpulse Drain - 24"	Drain-24" DIP x Bolt, Nut, Gasket Kit - (Testing)	4	EA	$	630.00	$	2,520.00	
Membrane Backpulse Drain - 24"	Drain-24" DIP x Megalug & Accessory Kit	19	EA	$	734.00	$	13,946.00	
Membrane Backpulse Drain - 24"	Detectable Marking Tape - 1000'	1	EA	$	65.00	$	65.00	
Membrane Backpulse Drain - 24"	Polywrap	1	LF	$	1.10	$	1.10	
Membrane Backpulse Drain - 24"	10 Mil Tape - 100'	6	EA	$	5.00	$	30.00	
Membrane Backpulse Drain - 24"	Tracer Wire, #14 THWN Insulated Copper, 500 LF	6	EA	$	107.00	$	642.00	
						$	**102,876.10**	
Permeate - 24"	Permeate-24" DIP .Pipe, TR-Flex Restrained	547	LF	$	271.00	$	148,237.00	P401 LINED DIP
Permeate - 24"	Permeate-24" DIP .Pipe, Spool 8'-0" FLxPE	2	EA	$	5,292.00	$	10,584.00	
Permeate - 24"	Permeate-24" DIP Bend, 45 MJ	2	EA	$	2,822.00	$	5,644.00	
Permeate - 24"	Permeate-24" DIP Bend, 90 MJ	4	EA	$	3,804.00	$	15,216.00	
Permeate - 24"	Permeate-24" DIP Blind Flange w/ 2" Tap (Testing)	2	EA	$	1,520.00	$	3,040.00	
Permeate - 24"	Permeate-24" DIP Solid Sleeve MJ	2	EA	$	2,591.00	$	5,182.00	
Permeate - 24"	Permeate-24" DIP x Bolt, Nut, Gasket Kit - (Testing)	2	EA	$	630.00	$	1,260.00	
Permeate - 24"	Permeate-24" DIP x Megalug & Accessory Kit	16	EA	$	734.00	$	11,744.00	
Permeate - 24"	Detectable Marking Tape - 1000'	1	EA	$	65.00	$	65.00	
Permeate - 24"	Polywrap	547	LF	$	1.10	$	601.70	
Permeate - 24"	10 Mil Tape - 100'	6	EA	$	5.00	$	30.00	
Permeate - 24"	Tracer Wire, #14 THWN Insulated Copper, 500 LF	6	EA	$	107.00	$	642.00	
						$	**202,245.70**	
PW - 01"	PW-01.0" Copper .Pipe Type K, Hard	30	LF	$	11.00	$	330.00	COPPER
PW - 01"	PW-01.0" Copper .Pipe Coupling (divide total length by 20' typ.)	1	EA	$	6.00	$	6.00	
PW - 01"	PW-01.0" Copper Bend, 90, SxS	2	EA	$	11.00	$	22.00	
PW - 01"	PW-01.0" Copper Cap	1	EA	$	6.00	$	6.00	
PW - 01"	PW-01.0" Copper Tee	1	EA	$	24.00	$	24.00	
PW - 01"	PW-01.0" Copper Valve, Ball, FIPTxFIPT	1	EA	$	26.00	$	26.00	
PW - 01"	PW-01.0" Copper Valve, Gate, FIPTxFIPT w/Valve Box & Lid	1	EA	$	459.00	$	459.00	
PW - 01"	PW-01.0" Copper Valve, Hose Bib, MIPT	1	EA	$	542.00	$	542.00	
PW - 01"	10 Mil Tape - 100'	1	EA	$	5.00	$	5.00	
PW - 01"	Solder & Flux	1	EA	$	84.00	$	84.00	
						$	**1,504.00**	
PW - 02"	PW-02.0" Copper .Pipe Type K, Hard	91	LF	$	27.00	$	2,457.00	COPPER
PW - 02"	PW-02.0" Copper .Pipe Coupling (divide total length by 20' typ.)	2	EA	$	22.00	$	44.00	
PW - 02"	PW-02.0" Copper Bend, 90, SxS	5	EA	$	44.00	$	220.00	
PW - 02"	PW-02.0" Copper Cap	3	EA	$	22.00	$	66.00	
PW - 02"	PW-02.0" Copper Valve, Gate, FIPTxFIPT w/Valve Box & Lid	1	EA	$	709.00	$	709.00	
PW - 02"	10 Mil Tape - 100'	1	EA	$	5.00	$	5.00	
PW - 02"	Solder & Flux	1	EA	$	84.00	$	84.00	
						$	**3,585.00**	
Fire Line - 06"	PW-06" DIP .Pipe, TR-Flex Restrained	24	LF	$	36.00	$	864.00	CEMENT LINED DIP
Fire Line - 06"	PW-06" DIP .Pipe, Spool 6'-0" FLxPE	1	EA	$	505.00	$	505.00	
Fire Line - 06"	PW-06" DIP Bend, 90 MJ	5	EA	$	117.00	$	585.00	
Fire Line - 06"	PW-06" DIP Blind Flange w/ 2" Tap (Testing)	1	EA	$	121.00	$	121.00	
Fire Line - 06"	PW-06" DIP Valve, Air Relase, Metal Cage w/ Padlock	1	EA	$	2,858.00	$	2,858.00	
Fire Line - 06"	PW-06" DIP Valve, Double Check Backflow Preventer Assembly COC C-311	1	EA	$	6,000.00	$	6,000.00	
Fire Line - 06"	PW-06" DIP x Bolt, Nut, Gasket Kit - (Testing)	1	EA	$	45.00	$	45.00	
Fire Line - 06"	PW-06" DIP x Megalug & Accessory Kit	11	EA	$	74.00	$	814.00	
Fire Line - 06"	Detectable Marking Tape - 1000'	1	EA	$	65.00	$	65.00	
Fire Line - 06"	Polywrap	24	LF	$	0.40	$	9.60	
Fire Line - 06"	10 Mil Tape - 100'	2	EA	$	5.00	$	10.00	
Fire Line - 06"	Tracer Wire, #14 THWN Insulated Copper, 500 LF	1	EA	$	107.00	$	107.00	
						$	**11,983.60**	
PW - 08"	PW-08" DIP .Pipe, TR-Flex Restrained	418	LF	$	47.00	$	19,646.00	CEMENT LINED DIP
PW - 08"	PW-08" DIP Bend, 45 MJ	1	EA	$	138.00	$	138.00	
PW - 08"	PW-08" DIP Bend, 90 MJ	4	EA	$	168.00	$	672.00	
PW - 08"	PW-08" DIP Cap w/ 1" Tap	1	EA	$	219.00	$	219.00	
PW - 08"	PW-08" DIP Cap w/ 2" Tap	3	EA	$	219.00	$	657.00	
PW - 08"	PW-08" DIP Cap w/ 2" Tap (Testing)	5	EA	$	219.00	$	1,095.00	
PW - 08"	PW-08" DIP Solid Sleeve MJ	6	EA	$	170.00	$	1,020.00	
PW - 08"	PW-08" DIP Tee, 08"x06" MJ	1	EA	$	207.00	$	207.00	
PW - 08"	PW-08" DIP Tee, 08"x08" MJ	7	EA	$	250.00	$	1,750.00	
PW - 08"	PW-08" DIP Valve, Gate MJ, w/ 8' Ext Stem, 10' Soil Pipe, Box & Lid	6	EA	$	2,113.00	$	12,678.00	
PW - 08"	PW-08" DIP Wye, 08"x08" MJ	1	EA	$	332.00	$	332.00	
PW - 08"	PW-08" DIP x Megalug & Accessory Kit	64	EA	$	104.00	$	6,656.00	
PW - 08"	Detectable Marking Tape - 1000'	1	EA	$	65.00	$	65.00	
PW - 08"	Polywrap	1	LF	$	0.40	$	0.40	
PW - 08"	10 Mil Tape - 100'	6	EA	$	5.00	$	30.00	
PW - 08"	Tracer Wire, #14 THWN Insulated Copper, 500 LF	2	EA	$	107.00	$	214.00	
						$	**45,379.40**	
Surface Water - 24"	Surface Water-02" Cast Iron Pipe, Spool 6'-0"	2	EA	$	209.00	$	418.00	P401 LINED DIP
Surface Water - 24"	Surface Water-24" DIP .Pipe, TR-Flex Restrained	571	LF	$	271.00	$	154,741.00	
Surface Water - 24"	Surface Water-24" DIP .Pipe, Spool 8'-0" FLxPE	4	EA	$	5,292.00	$	21,168.00	
Surface Water - 24"	Surface Water-24" DIP Bend, 11.25 MJ	1	EA	$	2,756.00	$	2,756.00	
Surface Water - 24"	Surface Water-24" DIP Bend, 22.5 MJ	4	EA	$	2,754.00	$	11,016.00	
Surface Water - 24"	Surface Water-24" DIP Bend, 45 MJ	2	EA	$	2,822.00	$	5,644.00	
Surface Water - 24"	Surface Water-24" DIP Bend, 90 MJ	1	EA	$	3,804.00	$	3,804.00	
Surface Water - 24"	Surface Water-24" DIP Blind Flange w/ 2" Tap	1	EA	$	1,520.00	$	1,520.00	
Surface Water - 24"	Surface Water-24" DIP Blind Flange w/ 2" Tap (Testing)	4	EA	$	1,520.00	$	6,080.00	
Surface Water - 24"	Surface Water-24" DIP Solid Sleeve MJ	2	EA	$	2,591.00	$	5,182.00	
Surface Water - 24"	Surface Water-24" DIP Tapping Saddle, 24"x02"	2	EA	$	992.00	$	1,984.00	
Surface Water - 24"	Surface Water-24" DIP Tee, 24"x24" MJ	2	EA	$	4,547.00	$	9,094.00	
Surface Water - 24"	Surface Water-24" DIP Tee, 24"x24" MJxFL	1	EA	$	6,298.00	$	6,298.00	

213	Surface Water - 24"	Surface Water-24" DIP Valve, Air Release 02"	2	EA	$	750.00	$	1,500.00
214	Surface Water - 24"	Surface Water-24" DIP x Bolt, Nut, Gasket Kit - (Testing)	4	EA	$	630.00	$	2,520.00
215	Surface Water - 24"	Surface Water-24" DIP x Bolt, Nut, Gasket Kit - SS316	1	EA	$	1,043.00	$	1,043.00
216	Surface Water - 24"	Surface Water-24" DIP x Megalug & Accessory Kit	28	EA	$	734.00	$	20,552.00
217	Surface Water - 24"	Detectable Marking Tape - 1000'	1	EA	$	65.00	$	65.00
218	Surface Water - 24"	Polywrap	1	LF	$	1.10	$	1.10
219	Surface Water - 24"	10 Mil Tape - 100'	6	EA	$	5.00	$	30.00
220	Surface Water - 24"	Tracer Wire, #14 THWN Insulated Copper, 500 LF	2	EA	$	107.00	$	214.00
221							**$**	**255,630.10**
222								
223	Storm	Storm-18" HDPE .Pipe, ADS N-12 WT	244	LF	$	33.00	$	8,052.00
224	Storm	Storm-18" HDPE .Pipe/Fitting Butt Weld	2	EA	$	-	$	-
225	Storm	Storm-18" HDPE Bend, 45	1	EA	$	816.00	$	816.00
226	Storm	Storm-18" HDPE Wall Pipe, 1'-6"	2	EA	$	-	$	-
227	Storm	Storm-18" HDPE x Waterstop Gasket	2	EA	$	107.00	$	214.00
228							**$**	**9,082.00**
229								
230		**Total**					**$**	**760,069.90**
231							**$**	**760,069.90**
232								
233								
234								
235								
236								
237								

Chandler RWIF 90% GMP
Yard Pipe Take-off - DIP & PVC & Copper
3/8/2022 Rev0

Control	System		Description	Qty	UM	Unit $	Total$	Lead Times	Notes
1	YP - Demo		Remove - Drain-02" PVC Cap	2	EA	$ -	$ -		X-PIPE/FTGS PVC
2	YP - Demo		Remove - PVC Line-01.5" Cap	2	EA	$ -	$ -		X-PIPE/FTGS PVC
3	YP - Demo		Remove - PW-08" PVC Cap	4	EA	$ -	$ -		X-PIPE/FTGS PVC
4							**$ -**		.
5									.
6	Relocation	PC250	EBP-16" DIP .Pipe, TR-Flex Restrained	36	LF	$141.87	$ 5,107.43		DI PIPE
7	Relocation		EBP-16" DIP .Pipe, Spool 8'-0" FLxFL	4	EA	$3,272.18	$ 13,088.72		DI SPLS
8	Relocation		EBP-16" DIP Bend, 45 MJ	8	EA	$1,286.16	$ 10,289.28		DI FTGS
9	Relocation		EBP-16" DIP Cap w/ 2" Tap (Testing)	4	EA	$253.80	$ 1,015.20		DI FTGS
10	Relocation		EBP-16" DIP Solid Sleeve MJ	4	EA	$1,207.50	$ 4,830.00		DI FTGS
11	Relocation		EBP-16" DIP x Megalug & Accessory Kit	24	EA	$293.58	$ 7,045.92		DI REST
12	Relocation	PC250	EBP-24" DIP .Pipe, TR-Flex Restrained	18	LF	$249.43	$ 4,489.80		DI PIPE
13	Relocation		EBP-24" DIP .Pipe, Spool 8'-0" FLxFL	2	EA	$5,471.24	$ 10,942.48		DI SPLS
14	Relocation		EBP-24" DIP Bend, 45 MJ	4	EA	$2,463.30	$ 9,853.20		DI FTGS
15	Relocation		EBP-24" DIP Cap w/ 2" Tap (Testing)	2	EA	$568.70	$ 1,137.40		DI FTGS
16	Relocation		EBP-24" DIP Solid Sleeve MJ	2	EA	$2,261.36	$ 4,522.72		DI FTGS
17	Relocation		EBP-24" DIP x Megalug & Accessory Kit	12	EA	$604.63	$ 7,255.56		DI REST
18	Relocation		Detectable Marking Tape - 1000'	1	EA		#VALUE!		X-PIPE ACCY
19	Relocation	24"	Polywrap	4	LF	$3.21	$ 12.86		U-PIPE ACCY
20	Relocation		10 Mil Tape - 100'	1	EA	$6.00	$ 6.00		U-PIPE ACCY
21	Relocation		Tracer Wire, #14 THWN Insulated Copper, 500 LF	1	EA		#VALUE!		X-PIPE ACCY
22							**#VALUE!**		.
23									.
24	Chlorine Sampler		Chlorine Sampler-01.0" CPVC .Pipe SCH.80	203	LF		#VALUE!		X-PIPE/FTGS PVC
25	Chlorine Sampler		Chlorine Sampler-01.0" CPVC .Pipe Coupling (divide total length by 20' typ.	4	EA		#VALUE!		X-PIPE/FTGS PVC
26	Chlorine Sampler		Chlorine Sampler-01.0" CPVC Bend, 45, SxS	2	EA		#VALUE!		X-PIPE/FTGS PVC
27	Chlorine Sampler		Chlorine Sampler-01.0" CPVC Bend, 90, SxS	7	EA		#VALUE!		X-PIPE/FTGS PVC
28	Chlorine Sampler		Chlorine Sampler-01.0" CPVC Cap	4	EA		#VALUE!		X-PIPE/FTGS PVC
29	Chlorine Sampler		Detectable Marking Tape - 1000'	1	EA		#VALUE!		X-PIPE ACCY
30	Chlorine Sampler		CPVC Primer & Glue	1	EA		#VALUE!		X-PIPE/FTGS PVC
31							**#VALUE!**		.
32									.
33	CIP Tank Drain - 04"	PC350	Drain-04" DIP .Pipe, TR-Flex Restrained	48	LF	$57.90	$ 2,779.27		DI PIPE
34	CIP Tank Drain - 04"		Drain-04" DIP .Pipe, Spool 8'-0" FLxPE	1	EA	$793.06	$ 793.06		DI SPLS
35	CIP Tank Drain - 04"		Drain-04" DIP Bend, 45 MJ	2	EA	$203.78	$ 407.56		DI FTGS
36	CIP Tank Drain - 04"		Drain-04" DIP Bend, 90 MJ	1	EA	$220.34	$ 220.34		DI FTGS
37	CIP Tank Drain - 04"		Drain-04" DIP Blind Flange w/ 2" Tap (Testing)	1	EA	$77.08	$ 77.08		DI FTGS
38	CIP Tank Drain - 04"		Drain-04" DIP Cap w/ 2" Tap (Testing)	1	EA	$23.50	$ 23.50		DI FTGS
39	CIP Tank Drain - 04"		Drain-04" DIP Solid Sleeve MJ	1	EA	$203.78	$ 203.78		DI FTGS
40	CIP Tank Drain - 04"		Drain-04" DIP Wye, 04"x04" MJ	1	EA	$471.50	$ 471.50		DI FTGS
41	CIP Tank Drain - 04"		Drain-04" DIP x Bolt, Nut, Gasket Kit - (Testing)	1	EA		#VALUE!		X-BOLT
42	CIP Tank Drain - 04"		Drain-04" DIP x LinkSeal, SS316	1	EA	$139.80	$ 139.80		U-MECH SEAL
43	CIP Tank Drain - 04"		Drain-04" DIP x Megalug & Accessory Kit	12	EA	$50.11	$ 601.32		DI REST
44	CIP Tank Drain - 04"		Detectable Marking Tape - 1000'	1	EA		#VALUE!		X-PIPE ACCY
45	CIP Tank Drain - 04"	04"	Polywrap	48	LF	$1.21	$ 58.29		U-PIPE ACCY
46	CIP Tank Drain - 04"		10 Mil Tape - 100'	1	EA	$6.00	$ 6.00		U-PIPE ACCY
47	CIP Tank Drain - 04"		Tracer Wire, #14 THWN Insulated Copper, 500 LF	1	EA		#VALUE!		X-PIPE ACCY
48							**#VALUE!**		.
49									.
50	CIP Tank Drain - 12"	PC350	Drain-12" DIP .Pipe, TR-Flex Restrained	29	LF	$97.64	$ 2,831.60		DI PIPE
51	CIP Tank Drain - 12"		Drain-12" DIP .Pipe, Spool 6'-0" FLxPE	1	EA	$1,432.60	$ 1,432.60		DI SPLS
52	CIP Tank Drain - 12"		Drain-12" DIP Bend, 90 MJ	1	EA	$860.66	$ 860.66		DI FTGS
53	CIP Tank Drain - 12"		Drain-12" DIP Blind Flange w/ 2" Tap (Testing)	1	EA	$294.69	$ 294.69		DI FTGS
54	CIP Tank Drain - 12"		Drain-12" DIP x Bolt, Nut, Gasket Kit - (Testing)	1	EA		#VALUE!		X-BOLT
55	CIP Tank Drain - 12"		Drain-12" DIP x LinkSeal, SS316	1	EA	$263.31	$ 263.31		U-MECH SEAL
56	CIP Tank Drain - 12"		Drain-12" DIP x Megalug & Accessory Kit	2	EA	$163.66	$ 327.32		DI REST
57	CIP Tank Drain - 12"		Detectable Marking Tape - 1000'	1	EA		#VALUE!		X-PIPE ACCY
58	CIP Tank Drain - 12"	12"	Polywrap	29	LF	$1.64	$ 47.64		U-PIPE ACCY
59	CIP Tank Drain - 12"		10 Mil Tape - 100'	1	EA	$6.00	$ 6.00		U-PIPE ACCY
60	CIP Tank Drain - 12"		Tracer Wire, #14 THWN Insulated Copper, 500 LF	1	EA		#VALUE!		X-PIPE ACCY
61							**#VALUE!**		.
62									.
63	Drain - 02"		Drain-02" Floor Drain	2	EA		#VALUE!		X-DRAIN
64	Drain - 02"		Drain-02" PVC Bend, 11.25, SxS	1	EA		#VALUE!		X-PIPE/FTGS PVC
65	Drain - 02"		Drain-02" PVC Bend, 45, SxS	7	EA		#VALUE!		X-PIPE/FTGS PVC
66	Drain - 02"		Drain-02" PVC Cap	6	EA		#VALUE!		X-PIPE/FTGS PVC
67	Drain - 02"		Drain-02" PVC Cross	1	EA		#VALUE!		X-PIPE/FTGS PVC
68	Drain - 02"		Drain-02" PVC Link Seal, SS16	2	EA		#VALUE!		X-PIPE/FTGS PVC
69	Drain - 02"		Drain-02" PVC Manhole Coating Repair	1	EA		#VALUE!		X-PIPE/FTGS PVC
70	Drain - 02"		Drain-02" PVC SDR26	187	LF		#VALUE!		X-PIPE/FTGS PVC
71	Drain - 02"		Drain-02" PVC Wye	3	EA		#VALUE!		X-PIPE/FTGS PVC
72	Drain - 02"		Drain-02" Sewer Cleanout Frame & Cover, MAG 441	3	EA		#VALUE!		X-DRAIN
73	Drain - 02"		Detectable Marking Tape - 1000'	1	EA		#VALUE!		X-PIPE ACCY
74	Drain - 02"		CPVC Primer & Glue	1	EA		#VALUE!		X-PIPE/FTGS PVC
75							**#VALUE!**		.
76									.
77	Turbidity Analyzer Panel Drain - 04"	PC350	Drain-04" DIP .Pipe, TR-Flex Restrained	80	LF	$57.90	$ 4,632.12		DI PIPE
78	Turbidity Analyzer Panel Drain - 04"		Drain-04" DIP .Pipe, Spool 8'-0" FLxPE	2	EA	$793.06	$ 1,586.12		DI SPLS
79	Turbidity Analyzer Panel Drain - 04"		Drain-04" DIP Bend, 45 MJ	2	EA	$203.78	$ 407.56		DI FTGS
80	Turbidity Analyzer Panel Drain - 04"		Drain-04" DIP Bend, 90 MJ	3	EA	$220.34	$ 661.02		DI FTGS
81	Turbidity Analyzer Panel Drain - 04"		Drain-04" DIP Blind Flange w/ 2" Tap (Testing)	2	EA	$77.08	$ 154.16		DI FTGS
82	Turbidity Analyzer Panel Drain - 04"		Drain-04" DIP Solid Sleeve MJ	1	EA	$203.78	$ 203.78		DI FTGS
83	Turbidity Analyzer Panel Drain - 04"		Drain-04" DIP Wye, 04"x04" MJ	1	EA	$471.50	$ 471.50		DI FTGS
84	Turbidity Analyzer Panel Drain - 04"		Drain-04" DIP x Bolt, Nut, Gasket Kit - (Testing)	2	EA		#VALUE!		X-BOLT
85	Turbidity Analyzer Panel Drain - 04"		Drain-04" DIP x LinkSeal, SS316	1	EA	$139.80	$ 139.80		U-MECH SEAL
86	Turbidity Analyzer Panel Drain - 04"		Drain-04" DIP x Megalug & Accessory Kit	14	EA	$50.11	$ 701.54		DI REST
87	Turbidity Analyzer Panel Drain - 04"		Detectable Marking Tape - 1000'	1	EA		#VALUE!		X-PIPE ACCY
88	Turbidity Analyzer Panel Drain - 04"	04"	Polywrap	2	LF	$1.21	$ 2.43		U-PIPE ACCY
89	Turbidity Analyzer Panel Drain - 04"		10 Mil Tape - 100'	6	EA	$6.00	$ 36.00		U-PIPE ACCY
90	Turbidity Analyzer Panel Drain - 04"		Tracer Wire, #14 THWN Insulated Copper, 500 LF	6	EA		#VALUE!		X-PIPE ACCY
91							**#VALUE!**		.
92									.
93	Drain - 04"		Drain-04" CPVC .Pipe SDR-26	33	LF		#VALUE!		X-PIPE/FTGS PVC
94	Drain - 04"		Drain-04" CPVC .Pipe Coupling (divide total length by 20' typ.)	2	EA		#VALUE!		X-PIPE/FTGS PVC
95	Drain - 04"		Drain-04" CPVC Bend, 45, SxS	2	EA		#VALUE!		X-PIPE/FTGS PVC
96	Drain - 04"		Drain-04" CPVC Bend, 90, SxS	1	EA		#VALUE!		X-PIPE/FTGS PVC
97	Drain - 04"		Drain-04" CPVC Cap	1	EA		#VALUE!		X-PIPE/FTGS PVC
98	Drain - 04"		Drain-04" CPVC Wye	1	EA		#VALUE!		X-PIPE/FTGS PVC
99	Drain - 04"		Drain-04" Sewer Cleanout Frame & Cover, MAG 441	1	EA		#VALUE!		X-DRAIN
100	Drain - 04"		Detectable Marking Tape - 1000'	1	EA		#VALUE!		X-PIPE ACCY
101	Drain - 04"		CPVC Primer & Glue	1	EA		#VALUE!		X-PIPE/FTGS PVC
102							**#VALUE!**		.

103									.
104	Drain - 06"			Drain-06" CPVC .Pipe SDR-26	90	LF		#VALUE!	X-PIPE/FTGS PVC
105	Drain - 06"			Drain-06" CPVC .Pipe Coupling (divide total length by 20' typ.)	4	EA		#VALUE!	X-PIPE/FTGS PVC
106	Drain - 06"			Drain-06" CPVC Bend, 90, SxS	2	EA		#VALUE!	X-PIPE/FTGS PVC
107	Drain - 06"			Drain-06" CPVC Link Seal, SS16	1	EA		#VALUE!	X-PIPE/FTGS PVC
108	Drain - 06"			Drain-06" CPVC Tee, 06'" x 03"	2	EA		#VALUE!	X-PIPE/FTGS PVC
109	Drain - 06"			Drain-06" PVC Bend, 45, SxS	2	EA		#VALUE!	X-PIPE/FTGS PVC
110	Drain - 06"			Drain-06" PVC Cap	3	EA		#VALUE!	X-PIPE/FTGS PVC
111	Drain - 06"			Drain-06" PVC Reducer, 06"x04"	1	EA		#VALUE!	X-PIPE/FTGS PVC
112	Drain - 06"			Drain-06" PVC Wye	1	EA		#VALUE!	X-PIPE/FTGS PVC
113	Drain - 06"			Detectable Marking Tape - 1000'	1	EA		#VALUE!	X-PIPE ACCY
114	Drain - 06"			CPVC Primer & Glue	1	EA		#VALUE!	X-PIPE/FTGS PVC
115								**#VALUE!**	.
116									.
117	Membrane Backpulse Drain - 24"		PC250	Drain-24" DIP .Pipe, TR-Flex Restrained	81	LF	$249.43	$ 20,204.11	DI PIPE
118	Membrane Backpulse Drain - 24"			Drain-24" DIP .Pipe, Spool 5'-0" FLxPE	4	EA	$3,217.46	$ 12,869.84	DI SPLS
119	Membrane Backpulse Drain - 24"			Drain-24" DIP Bend, 90 MJ	1	EA	$3,320.74	$ 3,320.74	DI FTGS
120	Membrane Backpulse Drain - 24"			Drain-24" DIP Bend, Tee 24"x24" MJ	3	EA	$3,969.34	$ 11,908.02	DI FTGS
121	Membrane Backpulse Drain - 24"			Drain-24" DIP Blind Flange w/ 2" Tap (Testing)	4	EA	$1,326.34	$ 5,305.36	DI FTGS
122	Membrane Backpulse Drain - 24"			Drain-24" DIP Solid Sleeve MJ	6	EA	$2,261.36	$ 13,568.16	DI FTGS
123	Membrane Backpulse Drain - 24"			Drain-24" DIP Wall Pipe, 1'-8" FLxMJ w/ Weep Ring	2	EA	$4,299.26	$ 8,598.52	DI EMBED
124	Membrane Backpulse Drain - 24"			Drain-24" DIP Waterstop Gasket	1	EA	$47.95	$ 47.95	U-WATERSTOP
125	Membrane Backpulse Drain - 24"			Drain-24" DIP x Bolt, Nut, Gasket Kit - (Testing)	4	EA		#VALUE!	X-BOLT
126	Membrane Backpulse Drain - 24"			Drain-24" DIP x Megalug & Accessory Kit	19	EA	$604.63	$ 11,487.97	DI REST
127	Membrane Backpulse Drain - 24"			Detectable Marking Tape - 1000'	1	EA		#VALUE!	X-PIPE ACCY
128	Membrane Backpulse Drain - 24"	24"		Polywrap	1	LF	$3.21	$ 3.21	U-PIPE ACCY
129	Membrane Backpulse Drain - 24"			10 Mil Tape - 100'	6	EA	$6.00	$ 36.00	U-PIPE ACCY
130	Membrane Backpulse Drain - 24"			Tracer Wire, #14 THWN Insulated Copper, 500 LF	6	EA		#VALUE!	X-PIPE ACCY
131								**#VALUE!**	.
132									.
133	Permeate - 24"		PC250	Permeate-24" DIP .Pipe, TR-Flex Restrained	547	LF	$249.43	$ 136,440.12	DI PIPE
134	Permeate - 24"			Permeate-24" DIP .Pipe, Spool 8'-0" FLxPE	2	EA	$4,619.66	$ 9,239.32	DI SPLS
135	Permeate - 24"			Permeate-24" DIP Bend, 45 MJ	2	EA	$2,463.30	$ 4,926.60	DI FTGS
136	Permeate - 24"			Permeate-24" DIP Bend, 90 MJ	4	EA	$3,320.74	$ 13,282.96	DI FTGS
137	Permeate - 24"			Permeate-24" DIP Blind Flange w/ 2" Tap (Testing)	2	EA	$1,326.34	$ 2,652.68	DI FTGS
138	Permeate - 24"			Permeate-24" DIP Solid Sleeve MJ	2	EA	$2,261.36	$ 4,522.72	DI FTGS
139	Permeate - 24"			Permeate-24" DIP x Bolt, Nut, Gasket Kit - (Testing)	2	EA		#VALUE!	X-BOLT
140	Permeate - 24"			Permeate-24" DIP x Megalug & Accessory Kit	16	EA	$604.63	$ 9,674.08	DI REST
141	Permeate - 24"			Detectable Marking Tape - 1000'	1	EA		#VALUE!	X-PIPE ACCY
142	Permeate - 24"	24"		Polywrap	547	LF	$3.21	$ 1,758.21	U-PIPE ACCY
143	Permeate - 24"			10 Mil Tape - 100'	6	EA	$6.00	$ 36.00	U-PIPE ACCY
144	Permeate - 24"			Tracer Wire, #14 THWN Insulated Copper, 500 LF	6	EA		#VALUE!	X-PIPE ACCY
145								**#VALUE!**	.
146									.
147	PW - 01"			PW-01.0" Copper .Pipe Type K, Hard	30	LF		#VALUE!	X-PIPE/FTGS COPPER
148	PW - 01"			PW-01.0" Copper .Pipe Coupling (divide total length by 20' typ.)	1	EA		#VALUE!	X-PIPE/FTGS COPPER
149	PW - 01"			PW-01.0" Copper Bend, 90, SxS	2	EA		#VALUE!	X-PIPE/FTGS COPPER
150	PW - 01"			PW-01.0" Copper Cap	1	EA		#VALUE!	X-PIPE/FTGS COPPER
151	PW - 01"			PW-01.0" Copper Tee	1	EA		#VALUE!	X-PIPE/FTGS COPPER
152	PW - 01"			PW-01.0" Copper Valve, Ball, FIPTxFIPT	1	EA		#VALUE!	X-PIPE/FTGS COPPER
153	PW - 01"			PW-01.0" Copper Valve, Gate, FIPTxFIPT w/Valve Box & Lid	1	EA		#VALUE!	X-PIPE/FTGS COPPER
154	PW - 01"			PW-01.0" Copper Valve, Hose Bib, MIPT	1	EA		#VALUE!	X-PIPE/FTGS COPPER
155	PW - 01"			10 Mil Tape - 100'	1	EA	$6.00	$ 6.00	U-PIPE ACCY
156	PW - 01"			Solder & Flux	1	EA		#VALUE!	X-PIPE/FTGS COPPER
157								**#VALUE!**	.
158									.
159	PW - 02"			PW-02.0" Copper .Pipe Type K, Hard	91	LF		#VALUE!	X-PIPE/FTGS COPPER
160	PW - 02"			PW-02.0" Copper .Pipe Coupling (divide total length by 20' typ.)	2	EA		#VALUE!	X-PIPE/FTGS COPPER
161	PW - 02"			PW-02.0" Copper Bend, 90, SxS	5	EA		#VALUE!	X-PIPE/FTGS COPPER
162	PW - 02"			PW-02.0" Copper Cap	3	EA		#VALUE!	X-PIPE/FTGS COPPER
163	PW - 02"			PW-02.0" Copper Valve, Gate, FIPTxFIPT w/Valve Box & Lid	1	EA		#VALUE!	X-PIPE/FTGS COPPER
164	PW - 02"			10 Mil Tape - 100'	1	EA	$6.00	$ 6.00	U-PIPE ACCY
165	PW - 02"			Solder & Flux	1	EA		#VALUE!	X-PIPE/FTGS COPPER
166								**#VALUE!**	.
167									.
168	Fire Line - 06"		PC350	PW-06" DIP .Pipe, TR-Flex Restrained	24	LF	$32.54	$ 781.06	DI PIPE
169	Fire Line - 06"			PW-06" DIP .Pipe, Spool 6'-0" FLxPE	1	EA	$440.42	$ 440.42	DI SPLS
170	Fire Line - 06"			PW-06" DIP Bend, 90 MJ	5	EA	$101.52	$ 507.60	DI FTGS
171	Fire Line - 06"			PW-06" DIP Blind Flange w/ 2" Tap (Testing)	1	EA	$104.81	$ 104.81	DI FTGS
172	Fire Line - 06"			PW-06" DIP Valve, Air Relase, Metal Cage w/ Padlock	1	EA		#VALUE!	X-V-ARV
173	Fire Line - 06"			PW-06" DIP Valve, Double Check Backflow Preventer Assembly COC C-311	1	EA		#VALUE!	X-V-BFP
174	Fire Line - 06"			PW-06" DIP x Bolt, Nut, Gasket Kit - (Testing)	1	EA		#VALUE!	X-BOLT
175	Fire Line - 06"			PW-06" DIP x Megalug & Accessory Kit	11	EA	$60.52	$ 665.72	DI REST
176	Fire Line - 06"			Detectable Marking Tape - 1000'	1	EA		#VALUE!	X-PIPE ACCY
177	Fire Line - 06"	06"		Polywrap	24	LF	$3.21	$ 77.14	U-PIPE ACCY
178	Fire Line - 06"			10 Mil Tape - 100'	2	EA	$6.00	$ 12.00	U-PIPE ACCY
179	Fire Line - 06"			Tracer Wire, #14 THWN Insulated Copper, 500 LF	1	EA		#VALUE!	X-PIPE ACCY
180								**#VALUE!**	.
181									.
182	PW - 08"		PC350	PW-08" DIP .Pipe, TR-Flex Restrained	418	LF	$42.91	$ 17,937.22	DI PIPE
183	PW - 08"			PW-08" DIP Bend, 45 MJ	1	EA	$119.85	$ 119.85	DI FTGS
184	PW - 08"			PW-08" DIP Bend, 90 MJ	4	EA	$146.64	$ 586.56	DI FTGS
185	PW - 08"			PW-08" DIP Cap w/ 1" Tap	1	EA	$190.68	$ 190.68	DI FTGS
186	PW - 08"			PW-08" DIP Cap w/ 2" Tap	3	EA	$218.08	$ 654.24	DI FTGS
187	PW - 08"			PW-08" DIP Cap w/ 2" Tap (Testing)	5	EA	$218.08	$ 1,090.40	DI FTGS
188	PW - 08"			PW-08" DIP Solid Sleeve MJ	6	EA	$148.05	$ 888.30	DI FTGS
189	PW - 08"			PW-08" DIP Tee, 08"x06" MJ	1	EA	$180.48	$ 180.48	DI FTGS
190	PW - 08"			PW-08" DIP Tee, 08"x08" MJ	7	EA	$218.08	$ 1,526.56	DI FTGS
191	PW - 08"			PW-08" DIP Valve, Gate MJ, w/ 8' Ext Stem, 10' Soil Pipe, Box & Lid	6	EA		#VALUE!	X-V-GAV
192	PW - 08"			PW-08" DIP Wye, 08"x08" MJ	1	EA	$289.05	$ 289.05	DI FTGS
193	PW - 08"			PW-08" DIP x Megalug & Accessory Kit	64	EA	$85.28	$ 5,457.92	DI REST
194	PW - 08"			Detectable Marking Tape - 1000'	1	EA		#VALUE!	X-PIPE ACCY
195	PW - 08"	08'		Polywrap	1	LF	$1.21	$ 1.21	U-PIPE ACCY
196	PW - 08"			10 Mil Tape - 100'	6	EA	$6.00	$ 36.00	U-PIPE ACCY
197	PW - 08"			Tracer Wire, #14 THWN Insulated Copper, 500 LF	2	EA		#VALUE!	X-PIPE ACCY
198								**#VALUE!**	.
199									.
200	Surface Water - 24"			Surface Water-02" Cast Iron Pipe, Spool 6'-0"	2	EA	$3,684.86	$ 7,369.72	DI SPLS
201	Surface Water - 24"		PC250	Surface Water-24" DIP .Pipe, TR-Flex Restrained	571	LF	$249.43	$ 142,426.53	DI PIPE
202	Surface Water - 24"			Surface Water-24" DIP .Pipe, Spool 8'-0" FLxPE	4	EA	$4,619.66	$ 18,478.64	DI SPLS
203	Surface Water - 24"			Surface Water-24" DIP Bend, 11.25 MJ	1	EA	$2,405.80	$ 2,405.80	DI FTGS
204	Surface Water - 24"			Surface Water-24" DIP Bend, 22.5 MJ	4	EA	$2,403.96	$ 9,615.84	DI FTGS
205	Surface Water - 24"			Surface Water-24" DIP Bend, 45 MJ	2	EA	$2,463.30	$ 4,926.60	DI FTGS
206	Surface Water - 24"			Surface Water-24" DIP Bend, 90 MJ	1	EA	$3,320.74	$ 3,320.74	DI FTGS
207	Surface Water - 24"			Surface Water-24" DIP Blind Flange w/ 2" Tap	1	EA	$4,376.90	$ 4,376.90	DI FTGS
208	Surface Water - 24"			Surface Water-24" DIP Blind Flange w/ 2" Tap (Testing)	4	EA	$1,326.34	$ 5,305.36	DI FTGS
209	Surface Water - 24"			Surface Water-24" DIP Solid Sleeve MJ	2	EA	$2,261.36	$ 4,522.72	DI FTGS
210	Surface Water - 24"			Surface Water-24" DIP Tapping Saddle, 24"x02"	2	EA	$533.23	$ 1,066.46	U-SADDLE
211	Surface Water - 24"			Surface Water-24" DIP Tee, 24"x24" MJ	2	EA	$3,969.34	$ 7,938.68	DI FTGS

212	Surface Water - 24"		Surface Water-24" DIP Tee, 24"x24" MJxFL	1	EA	$5,498.13	$	5,498.13	DI FTGS
213	Surface Water - 24"		Surface Water-24" DIP Valve, Air Release 02"	2	EA			#VALUE!	X-V-ARV
214	Surface Water - 24"		Surface Water-24" DIP x Bolt, Nut, Gasket Kit - (Testing)	4	EA			#VALUE!	X-BOLT
215	Surface Water - 24"		Surface Water-24" DIP x Bolt, Nut, Gasket Kit - SS316	1	EA			#VALUE!	X-BOLT
216	Surface Water - 24"		Surface Water-24" DIP x Megalug & Accessory Kit	28	EA	$604.63	$	16,929.64	DI REST
217	Surface Water - 24"		Detectable Marking Tape - 1000'	1	EA			#VALUE!	X-PIPE ACCY
218	Surface Water - 24"	24"	Polywrap	1	LF	$3.21	$	3.21	U-PIPE ACCY
219	Surface Water - 24"		10 Mil Tape - 100'	6	EA	$6.00	$	36.00	U-PIPE ACCY
220	Surface Water - 24"		Tracer Wire, #14 THWN Insulated Copper, 500 LF	2	EA			#VALUE!	X-PIPE ACCY
221								**#VALUE!**	.
222									.
223	Storm		Storm-18" HDPE .Pipe, ADS N-12 WT	244	LF			#VALUE!	X-PIPE/FTGS HDPE
224	Storm		Storm-18" HDPE .Pipe/Fitting Butt Weld	2	EA			#VALUE!	X-PIPE/FTGS HDPE
225	Storm		Storm-18" HDPE Bend, 45	1	EA			#VALUE!	X-PIPE/FTGS HDPE
226	Storm		Storm-18" HDPE Wall Pipe, 1'-6"	2	EA			#VALUE!	X-PIPE/FTGS HDPE
227	Storm		Storm-18" HDPE x Waterstop Gasket	2	EA			#VALUE!	X-PIPE/FTGS HDPE
228								**#VALUE!**	.
229									.
230			**Total**					**#VALUE!**	.
231								**#VALUE!**	.
232									
233									
234									
235									
236									
237									

Chandler AZ WRIF 90% GMP – Yard List – Notes and Exceptions

1. All prices included in this quotation are good if released for delivery with approved submittals by date noted below:

    - Ductile Iron Pipe - Ship By 6/15/2022
    - Fabricated Ductile Pipe – Ship By 6/15/2022
    - Ductile Iron Fittings – Ship By 9/17/2022
    - Ductile Iron Restraints – Order by 9/17/2022
    - HDPE(ADS) Pipe and Fittings – Order by 5/5/2022
    - PVC and CPVC SCH80 and SCH40 – Order by 5/5/2022
    - C900 PVC Pipe – Order by 3/4/2022 – Ship By 5/5/2022
    - Bolt Nut Gasket Sets – Order by – 8/15/2022
    - Gate Valves – Order by 4/15/2022
    - Air Release Valves – Order by
    - Link Seals – Order by 8/15/2022
    - Valve Boxes – Order by 8/15/2022
    - Small Bore Valves – Order by 8/15/2022
    - Copper Pipe and Fittings – Order by 4/21/2022

2. Quantities and material quoted herein are per Core & Main's interpretation of the plans and specs. Unit prices prevail. This is not a guaranteed bill of materials and it remains the contractor's responsibility to determine final quantities and materials needed to meet plan and specification requirements.

3. Core & Main reserves the right to increase prices upon thirty (30) calendar days' notice to address factors, including, but not limited to Government regulations, tariffs, transportation, fuel and raw material costs. Any material deliveries delayed beyond manufacturer lead times may be subject to price increases and/or applicable storage fees.

4. Core & Main will use commercially reasonable efforts to deliver materials and services ordered within the time specified in the bid documents or the Agreement. Core & Main reserves the right to extend those delivery times based on manufacturer lead times as impacted events beyond the control of Core & Main or the manufacturer including but not limited to availability of materials, availability of raw materials or component parts, the current pandemic, global shipping delays and resin shortage. Core & Main will not be liable for liquidated damages or other delay damages arising from delays in delivery, increases in manufacturer lead times or other circumstances beyond the control of Core & Main. Availability of materials cannot be guaranteed. This term supersedes all other contractual provisions.

Ductile Iron Pipe, Fabricated Ductile Pipe, Fittings

1. Specific to the ductile iron, this order must be ordered and shipped complete by 6/15/2022.
    a. If no purchase order is received by this date, the quoted pricing for ductile iron is null and void.
    b. Material ordered and shipped after the 6/15/2022 date is subject to a 9% price increase every 180 days.
2. All Ductile Iron Pipe is subject to a surcharge assessed on the day the pipe is shipped form the factory. At this time, the estimated Surcharge for all Straight Length Ductile Pipe on this quote is $ 11,407.00 and will be billed at the time if shipment as a separate line item on the invoice. This surcharge can not be combined with the price of the pipe. This surcharge is subject to change on 4/10/2022.
3. All lengths of Fabricated Ductile are priced per a 6" Increment of Pipe Lay Length. If any item alters above or below this 6" Incremental length, the price will also alter accordingly.
4. Layout Drawings, CAD, Pipe Drawings, Sketches are not included in this quotation. These can be provided if needed at a cost of $400 per sheet.
5. All Fabricated Ductile Pipe is non-returnable.
6. Fittings over 18" In size are Non-Returnable.
7. Protecto 401 and Glass Lines Fittings of all sizes are Non-Returnable.
8. Protecto 401 Coated Pipe and Fittings must be installed no later that 12 months from Coating Date.
9. Tap locations in Blind Flanges, Caps and Plugs are all Centered. If Tap location is offset an additional charge will be incurred.
10. Freight on Pipe - Full Length: Freight allowed to Jobsite for FULL TRUCKLOAD quantities only. (40,000#). $350.00 Drop fee for partial truckload shipments.
11. Freight on Fabricated Pipe: Freight allowed for releases with a minimum of $5000.00 of fabricated items
12. Glass Lined Fittings: Freight allowed for releases with a minimum of $5000.00 of fittings.
13. Glass Lined Products: Freight allowed for releases with a minimum of $40000.00 of glass lined products.
14. Fabricated Pipe, Fittings, and Glass Lined Products may ship in a closed van. If closed vans are not allowed, U.S. Pipe will re-price these items and/or modify the freight terms to allow for flatbed equipment. This requirement must be established prior to bid acceptance.

PVC Pipe C900, SDR26 and Sch80

1. Core and Main recommends that all PVC Pipe be covered upon delivery to the jobsite and kept covered until it is to be installed.

2. When PVC pipe is properly covered and not exposed to sunlight, the allowable storage time is unlimited. The two year criteria(ASTN F1668 Section 5) is a cumulative value of the time the pipe is in exposed storage and is not based on the date of manufacture.
3. It is important for the gasket in each pipe to be checked for hardening or cracking prior to assembly and installation. If a gasket has become hard or cracked, the product should not be used.

4. TEMPERATURE CONSIDERATIONS PVC will display a variation in physical properties with changes in temperature. Colder temperatures result in increases in pipe stiffness and tensile strength and decreases in impact strength. The decrease in impact strength requires care in handling during installation in freezing temperatures.

Bolt Nut and Gasket Sets

1. All bolt nut gasket set quoted are of standard length and quantity for an ANSI 150# Ductile Iron Flange Pattern and Thickness unless otherwise stated. If any deviations in Flange Type, Style, Thickness are required, the associated Bolts/Nuts/Gaskets will be re-quoted accordingly.

All Valves

1. All valve Certificate of Proper Installation certificates required on the project can only be carried out in the event the contractor notifies Core & Main 3 weeks prior to installation of each type of valve to coordinate installation supervision, training and initial commissioning as detailed in the specifications. If the contractor does not notify Core & Main prior to the installation of each type of valve, the Certificate of Proper Installation will not be required nor provided for any such valve and be the responsibility of the contractor.

Estimated Lead Times (Ship Date).

Quoted date is for convenience only. Estimated dates below are reflective of the order shipping complete after release of the material. Release of the material requires approved submittals.

More accurate ship dates will be given upon order being placed.

- Ductile Iron Pipe – 12-18 Months
- Fabricated Ductile Pipe – 12-18 Months
- Ductile Iron Fittings – 6-9 Months
- Ductile Iron Restraints – 4-6 Months
- PVC and CPVC SCH80 and SCH40 – 3-4 Months
- Bolt Nut Gasket Sets – 4-6 Months
- Air Release Valves – 12-18 Months
- Gate Valves – 8-12 Months
- Link Seals – 1-2 Months
- Valve Boxes/stems/Risers – 4-6 Months
- Small Bore Valves – 4-6 Months
- Copper Pipe and Fittings – 2-4 Months

Warranty for Valves

Warranty dates shown below are at quoted costs. Some items carry a longer warranty if a % is paid in addition to the quoted price.

- Gate Valves – 120 Months from ship date of each valve
- Air Release Valves – 12 Months from Ship Date of Each valve

Chandler RWIF 90% GMP
Yard Pipe Take-off - DIP & PVC & Copper
3/8/2022 Rev0

Control	System	Description	Qty	UM	Unit $	Total$	Lead Times	Notes
41	CIP Tank Drain - 04"	Drain-04" DIP x Bolt, Nut, Gasket Kit - (Testing)	1	EA	$ 15.00	$ 15.00		
54	CIP Tank Drain - 12"	Drain-12" DIP x Bolt, Nut, Gasket Kit - (Testing)	1	EA	$ 75.00	$ 75.00		
84	Turbidity Analyzer Panel Drain - 0	Drain-04" DIP x Bolt, Nut, Gasket Kit - (Testing)	2	EA	$ 15.00	$ 30.00		
125	Membrane Backpulse Drain - 24"	Drain-24" DIP x Bolt, Nut, Gasket Kit - (Testing)	4	EA	$ 135.00	$ 540.00		
139	Permeate - 24"	Permeate-24" DIP x Bolt, Nut, Gasket Kit - (Testing)	2	EA	$ 135.00	$ 270.00		
174	Fire Line - 06"	PW-06" DIP x Bolt, Nut, Gasket Kit - (Testing)	1	EA	$ 20.00	$ 20.00		
214	Surface Water - 24"	Surface Water-24" DIP x Bolt, Nut, Gasket Kit - (Testing)	4	EA	$ 135.00	$ 540.00		
215	Surface Water - 24"	Surface Water-24" DIP x Bolt, Nut, Gasket Kit - SS316	1	EA	$ 695.00	$ 695.00		Quoting Garlock 9122 gasket

QUOTE

FORTILINE WATERWORKS
a MORSCO brand

Due to the continued cost and supply challenges in the DUCTILE IRON PIPE, PVC and HDPE markets, the pricing of these products will be based solely on the availability at the time of shipment. Also, given the volatility in these markets we will not be responsible for product availability and shipment delays, as they are out of our control. Bid prices should be considered an estimate, materials will only be priced at time of shipment until the current supply chain challenges are resolved. These terms are in leu of our standard terms. We appreciate your partnership.

CUSTOMER NO	QUOTING BRANCH	QUOTE NO	QUOTE DATE	PAGE
221530	FORTILINE PEORIA	6179292	3/17/22	1

CUSTOMER

MCCARTHY CONSTRUCTION COMPANY
6225 N. 24th ST. #200
PHOENIX, AZ 85016

PROJECT INFORMATION

CHANDLER RWIF 90%

LINE	QTY	UOM	DESCRIPTION	UNIT PRICE	TOTAL PRICE
			********** GIVEN THE CURRENT PRICING AND SUPPLY CHAIN CHALLENGES ALL MATERIAL WILL BE PRICED AT TIME OF SHIPMENT AND THE PRICES BELOW ARE TO BE USED AS AN ESTIMATE FOR BID PURPOSES ONLY **********		
			RELOCATION		
50	36	FT	16" RJ DIP TR FLEX P401 PR250	130.9600	4,714.56
3180	4	EA	16" FLGXFLG DIP 8'00" P401	4,260.5100	17,042.04
70	8	EA	16" MJ 45 P401 C153	1,633.0100	13,064.08
80	4	EA	16"X2" MJ TAPT CAP P401 C153	1,120.7900	4,483.16
90	4	EA	16" MJ LONG SLEEVE P401 C153	1,533.1300	6,132.52
100	24	EA	16" STAR GRIP MJ REST DIP 3000	186.1000	4,466.40
110	24	EA	16" MJ REGULAR ACC LESS GLAND	58.1500	1,395.60
120	18	FT	24" RJ DIP TR FLEX P401 PR250	238.9300	4,300.74
130	2	EA	24" FLGXFLG DIP 8'00" P401	5,939.1300	11,878.26
140	4	EA	24" MJ 45 P401 C153	3,127.5900	12,510.36
150	2	EA	24"X2" MJ TAPT CAP P401 C153	2,144.6300	4,289.26
160	2	EA	24" MJ LONG SLEEVE P401 C153	2,871.1900	5,742.38
170	12	EA	24" STAR GRIP MJ REST DIP 3000	454.5900	5,455.08
180	12	EA	24" MJ REG ACC LESS GLAND	80.7000	968.40
190	1	EA	6"X1000' WATER DET TAPE	180.0000	180.00
200	340	FT	24" BLK POLYWRAP 54"X150'	1.2300	418.20
210	1	EA	2"X100' POLY TAPE	5.5000	5.50
220	1	EA	12GA TRACER WIRE BLUE 500'	105.0000	105.00
			CHLORINE SAMPLER		
260	220	FT	1" SCH80 CPVC PIPE BE	4.1400	910.80
270	4	EA	1" SCH80 CPVC CPLG HXH	9.0300	36.12
280	2	EA	1" SCH80 CPVC 45 HXH	12.7500	25.50
290	7	EA	1" SCH80 CPVC 90 HXH	9.1900	64.33
300	1	EA	3"X1000' WATER DETECTOR TAPE	44.1000	44.10
310	1	EA	QUART PURPLE PRIMER	21.4700	21.47
320	1	EA	WELDON 724 ORANGE CPVC GLUE QT	53.6600	53.66
			DRAIN 4		
360	54	FT	4" RJ DIP TR FLEX P401 PR350	54.6000	2,948.40
370	1	EA	4" FLGXPE DIP 8'00" P401	807.7600	807.76
380	2	EA	4" MJ 45 P401 C153	258.7300	517.46
390	1	EA	4" MJ 90 P401 C153	279.7600	279.76
400	1	EA	4"X2" TAPT BLIND FLG P401 C110	311.3800	311.38

ALL STOCK DELIVERIES ARE SUBJECT TO SHIPPING CHARGES

All PVC and HDPE material is quoted for shipment within 7 days of quote/bid date. All other material is quoted for shipment within 30 days of quote/bid date.
After 7 days for PVC and HDPE or 30 days for all other material, ALL quoted prices are subject to review based on current market conditions.

BIDCNEW

CUSTOMER NO	JOB NAME	QUOTE NO	QUOTE DATE	PAGE
221530	CHANDLER RWIF 90%	6179292	3/17/22	2

LINE	QTY	UOM	DESCRIPTION	UNIT PRICE	TOTAL PRICE
410	1	EA	4"X2" MJ TAPT CAP P401 C153	254.0600	254.06
420	1	EA	4" MJ LONG SLEEVE P401 C153	258.7300	258.73
430	1	EA	4" MJ WYE P401 C153	486.5100	486.51
440	1	EA	4" FLG BOLT KIT HDG A307A W/FF 1/8" MAG SBR GASKET PIZZA BOX STYLE	13.9100	13.91
450	8	EA	LS-410 LINK SEAL 316SS	16.6200	132.96
460	12	EA	4" STAR GRIP MJ REST DIP 3000	25.7400	308.88
470	12	EA	4" MJ REGULAR ACC LESS GLAND	20.7700	249.24
480	300	FT	3-8" BLACK POLYWRAP 20"X300' PERF 20' 388-9943	.4400	132.00
490	1	EA	2"X100' POLY TAPE	5.5000	5.50
500	1	EA	12GA TRACER WIRE BLUE 500'	105.0000	105.00
			12 DRAIN		
540	36	FT	12" RJ DIP TR FLEX P401 PR350	91.2000	3,283.20
550	1	EA	12" FLGXPE DIP 6'00" P401	1,713.7800	1,713.78
560	1	EA	12" MJ 90 P401 C153	1,092.7600	1,092.76
570	1	EA	12X2 TAPT BLIND FLG P401 C110	1,195.9900	1,195.99
580	1	EA	12" FLG BOLT KIT HDG A307B W/FF 1/8" MAG SBR GASKET PIZZA BOX STYLE	67.9200	67.92
590	16	EA	LS-425 LINK SEAL 316SS	12.6200	201.92
600	2	EA	12" STAR GRIP MJ REST DIP 3000	98.2400	196.48
610	2	EA	12" MJ REGULAR ACC LESS GLAND	36.7900	73.58
620	1	EA	3"X1000' WATER DETECTOR TAPE	44.1000	44.10
630	300	FT	10-12 BLACK POLYWRAP 27"X300' PERF 20' 388-9952	.6900	207.00
640	1	EA	2"X100' POLY TAPE	5.5000	5.50
650	1	EA	12GA TRACER WIRE BLUE 500'	105.0000	105.00
			DRAIN 2"		
690	1	EA	2" CI FLOOR DRAIN ZURN 415	248.7500	248.75
700	1	EA	2" SCH40 PVC 11-1/4 HXH	3.6400	3.64
710	7	EA	2" SCH40 PVC 45 HXH	2.7200	19.04
720	6	EA	2" SCH40 PVC CAP H	1.1900	7.14
730	1	EA	2" SCH40 PVC CROSS HXH	6.3200	6.32
740	8	EA	LS-400 LINK SEAL 316SS	13.1800	105.44
750	2	FT	2" SDR26 CL160 PVC PIPE WHITE	4.9600	9.92
760	3	EA	2" SCH40 PVC WYE HXH	20.1900	60.57
770	3	EA	198 MONUMENT BODY ONLY	117.0600	351.18
780	3	EA	198 MONUMENT LID M/SEWER	35.1200	105.36
790	1	EA	6"X1000' SEWER DETECTOR TAPE GREEN	180.0000	180.00
800	1	EA	QUART PURPLE PRIMER	21.4700	21.47
810	1	EA	1 QT. HEAVY GRAY CEMENT WELD ON #711 IPS	36.3900	36.39
			TUB ANALYZER DRAIN		
850	90	FT	4" RJ DIP TR FLEX P401 PR350	54.6000	4,914.00
860	2	EA	4" FLGXPE DIP 8'00" P401	807.7600	1,615.52
870	2	EA	4" MJ 45 P401 C153	258.7300	517.46
880	3	EA	4" MJ 90 P401 C153	279.7600	839.28
890	2	EA	4"X2" TAPT BLIND FLG P401 C110	311.3800	622.76
900	1	EA	4" MJ LONG SLEEVE P401 C153	258.7300	258.73
910	1	EA	4" MJ WYE P401 C153	486.5100	486.51
920	1	EA	4" FLG BOLT KIT HDG A307A W/FF 1/8" MAG SBR GASKET PIZZA BOX STYLE	13.9100	13.91
930	8	EA	LS-410 LINK SEAL 316SS	16.6200	132.96
940	14	EA	4" STAR GRIP MJ REST DIP 3000	25.7400	360.36
950	14	EA	4" MJ REGULAR ACC LESS GLAND	20.7700	290.78

ALL STOCK DELIVERIES ARE SUBJECT TO SHIPPING CHARGES

All PVC and HDPE material is quoted for shipment within 7 days of quote/bid date. All other material is quoted for shipment within 30 days of quote/bid date.
After 7 days for PVC and HDPE or 30 days for all other material, ALL quoted prices are subject to review based on current market conditions.

CUSTOMER NO	JOB NAME	QUOTE NO	QUOTE DATE	PAGE
221530	CHANDLER RWIF 90%	6179292	3/17/22	3

LINE	QTY	UOM	DESCRIPTION	UNIT PRICE	TOTAL PRICE
960	1	EA	6"X1000' WATER DET TAPE	180.0000	180.00
970	300	FT	3-8" BLACK POLYWRAP 20"X300' PERF 20' 388-9943	.4400	132.00
980	6	EA	2"X100' POLY TAPE	5.5000	33.00
990	6	EA	12GA TRACER WIRE BLUE 500'	105.0000	630.00
			4 DRAIN CPVC		
1030	40	FT	4" SCH80 CPVC PIPE BE	24.8600	994.40
1040	2	EA	4" SCH80 CPVC 45 HXH	103.8800	207.76
1050	1	EA	4" SCH80 CPVC 90 HXH	125.7400	125.74
1060	1	EA	4" SOC CAP CPVC-S80	94.5600	94.56
1070	1	EA	4" SCH80 CPVC WYE HXH	445.6700	445.67
1080	1	EA	198 MONUMENT BODY ONLY	117.0600	117.06
1090	1	EA	198 MONUMENT LID M/SEWER	35.1200	35.12
1100	1	EA	6"X1000' SEWER DETECTOR TAPE GREEN	180.0000	180.00
1110	1	EA	QUART PURPLE PRIMER	21.4700	21.47
1120	1	EA	32OZ CPVC-PVC ORANGE CEMENT INDUSTRIAL	44.0700	44.07
1150	100	FT	6" SCH80 CPVC PIPE BE	35.7500	3,575.00
1160	2	EA	6" SCH80 CPVC 90 HXH	170.4900	340.98
1170	10	EA	LS-400 LINK SEAL 316SS	13.1800	131.80
1180	2	EA	6" SCH80 CPVC TEE HXH	212.1800	424.36
1190	2	EA	6"X3" SCH80 CPVC BUSH SPXH	91.3300	182.66
1200	2	EA	6" SCH80 CPVC 45 HXH	215.9600	431.92
1210	3	EA	6" SOC CAP CPVC-S80	246.0000	738.00
1220	1	EA	6"X4" SCH80 CPVC BUSH SPXH	90.6900	90.69
1230	1	EA	6" SOC WYE CPVC-S80	475.4500	475.45
1240	1	EA	6"X1000' SEWER DETECTOR TAPE GREEN	180.0000	180.00
1250	1	EA	QUART PURPLE PRIMER	21.4700	21.47
1260	1	EA	32OZ CPVC-PVC ORANGE CEMENT INDUSTRIAL	44.0700	44.07
			24" BACKPULSE DRAIN		
1300	90	FT	24" RJ DIP TR FLEX P401 PR250	238.9300	21,503.70
1310	4	EA	24" FLGXPE DIP 5'00" P401	3,855.3800	15,421.52
1320	1	EA	24" MJ 90 P401 C153	4,216.2600	4,216.26
1330	3	EA	24" MJ TEE P401 C153	5,039.7700	15,119.31
1340	4	EA	24X2 TAPT BLIND FLG P401 C110	5,416.4100	21,665.64
1350	6	EA	24" MJ LONG SLEEVE P401 C153	2,871.1900	17,227.14
1360	1	EA	24"X1'8" PRIMED WALL SLEEVE	2,799.0300	2,799.03
1370	1	EA	24" MJ REGULAR GASKET	29.6700	29.67
1380	4	EA	24" FLG BOLT KIT HDG A307B W/FF 1/8" NEOPRENE GSKT PIZZA BOX STYLE	261.1100	1,044.44
1390	4	EA	24"X1/8" FLG FF NEOPRENE GSKT	68.0000	272.00
1400	19	EA	24" STAR GRIP MJ REST DIP 3000	454.5900	8,637.21
1410	19	EA	24" MJ REG ACC LESS GLAND	80.7000	1,533.30
1420	1	EA	6"X1000' SEWER DETECTOR TAPE GREEN	180.0000	180.00
1430	6	EA	2"X100' POLY TAPE	5.5000	33.00
			POLY ABOVE		
1450	6	EA	12GA TRACER WIRE GREEN 500'	105.0000	630.00
			24" PERMEATE		

ALL STOCK DELIVERIES ARE SUBJECT TO SHIPPING CHARGES

All PVC and HDPE material is quoted for shipment within 7 days of quote/bid date. All other material is quoted for shipment within 30 days of quote/bid date. After 7 days for PVC and HDPE or 30 days for all other material, ALL quoted prices are subject to review based on current market conditions.

CUSTOMER NO	JOB NAME	QUOTE NO	QUOTE DATE	PAGE
221530	CHANDLER RWIF 90%	6179292	3/17/22	4

LINE	QTY	UOM	DESCRIPTION	UNIT PRICE	TOTAL PRICE
1490	558	FT	24" RJ DIP TR FLEX P401 PR350	189.2000	105,573.60
1500	2	EA	24" FLGXPE DIP 8'00" P401	5,330.2500	10,660.50
1510	2	EA	24" MJ 45 P401 C153	3,127.5900	6,255.18
1520	4	EA	24" MJ 90 P401 C153	4,216.2600	16,865.04
1530	2	EA	24X2 TAPT BLIND FLG P401 C110	5,416.4100	10,832.82
1540	2	EA	24" MJ LONG SLEEVE P401 C153	2,871.1900	5,742.38
1550	2	EA	24" FLG BOLT KIT HDG A307B W/FF 1/8" NEOPRENE GSKT PIZZA BOX STYLE	261.1100	522.22
1560	2	EA	24"X1/8" FLG FF NEOPRENE GSKT	68.0000	136.00
1570	16	EA	24" STAR GRIP MJ REST DIP 3000	454.5900	7,273.44
1580	16	EA	24" MJ REG ACC LESS GLAND	80.7000	1,291.20
1590	1	EA	6"X1000' SEWER DETECTOR TAPE GREEN	180.0000	180.00
1600	680	FT	24" BLK POLYWRAP 54"X150'	1.2300	836.40
1610	6	EA	2"X100' POLY TAPE	5.5000	33.00
1620	6	EA	12GA TRACER WIRE GREEN 500'	105.0000	630.00
			PW 1		
1660	30	FT	1X20' TYPE K HARD COPPER TUBE	7.9000	237.00
1670	1	EA	1" COPPER SWEAT CPLG	2.9200	2.92
1680	2	EA	1" COPPER SWEAT 90	5.6400	11.28
1690	1	EA	1" COPPER SWEAT CAP	3.0900	3.09
1700	1	EA	1" COPPER TEE	12.5900	12.59
1710	1	EA	1" BRASS BALL VALVE NO LEAD	22.3800	22.38
1720	1	EA	1" BALL VLV FIPXFIP NL W/LOCK WING	119.3800	119.38
1730	1	EA	562A VLV BOX LID M/WATER 2" DEEP SKIRT	36.2300	36.23
1740	1	EA	562A SLIP VB TOP L/LID	75.0400	75.04
1750	1	EA	562AB SLIP VLV BOX BOTTOM	75.0400	75.04
1760	1	EA	DC457 BLUE DEBRIS CAP	65.2000	65.20
1770	1	EA	1" HOSE BIBB NO LEAD 646R05LF	28.7800	28.78
1780	1	EA	2"X100' POLY TAPE	5.5000	5.50
1790	1	EA	ROLL SOLDER	32.2000	32.20
1800	1	EA	16OZ FLUX 30041	14.9400	14.94
			2 PW		
1840	95	FT	1X20' TYPE K HARD COPPER TUBE	7.9000	750.50
1850	2	EA	1" COPPER SWEAT CPLG	2.9200	5.84
1860	5	EA	2" COPPER SWEAT 90	23.7000	118.50
1870	3	EA	2" COPPER SWEAT CAP	11.2100	33.63
1880	1	EA	2" BALL VLV FIPXFIP NL W/LOCK WING	342.8800	342.88
1890	1	EA	562A VLV BOX LID M/WATER 2" DEEP SKIRT	36.2300	36.23
1900	1	EA	562A SLIP VB TOP L/LID	75.0400	75.04
1910	1	EA	562AB SLIP VLV BOX BOTTOM	75.0400	75.04
1920	1	EA	DC457 BLUE DEBRIS CAP	65.2000	65.20
1930	1	EA	2"X100' POLY TAPE	5.5000	5.50
1940	1	EA	ROLL SOLDER	32.2000	32.20
1950	1	EA	16OZ FLUX 30041	14.9400	14.94
			6 PW		
1990	36	FT	6" RJ DIP TR FLEX PR350	30.1900	1,086.84
2000	1	EA	6" FLGXPE DIP 6'00"	555.6700	555.67
2010	5	EA	6" MJ 90 C153	123.2900	616.45
2020	1	EA	6"X2" TAP BLIND FLG C110	118.1500	118.15
2030	1	EA	6X2 IP SDL BRZ AC/DIP DOUBLE STRAP 6.84-7.45	186.8100	186.81
2040	1	EA	2" BALL CORP MIPXPJC NL	333.9900	333.99

ALL STOCK DELIVERIES ARE SUBJECT TO SHIPPING CHARGES

All PVC and HDPE material is quoted for shipment within 7 days of quote/bid date. All other material is quoted for shipment within 30 days of quote/bid date. After 7 days for PVC and HDPE or 30 days for all other material, ALL quoted prices are subject to review based on current market conditions.

CUSTOMER NO	JOB NAME	QUOTE NO	QUOTE DATE	PAGE
221530	CHANDLER RWIF 90%	6179292	3/17/22	5

LINE	QTY	UOM	DESCRIPTION	UNIT PRICE	TOTAL PRICE
2050	1	EA	2" CPLG PJCXPJC E2609 LOW LEAD	133.0000	133.00
2060	20	FT	2X20' TYPE K HARD COPPER TUBE	19.4200	388.40
2070	1	EA	2" COPPER SWEAT 90	23.7000	23.70
2080	1	EA	2" COPPER SWEAT 90	23.7000	23.70
2090	1	EA	2" BALL VALVE PJCXFIP P-25172N LOW LEAD	347.8300	347.83
2100	1	EA	2"X6" BRASS NIPPLE	39.5600	39.56
2110	1	EA	2" BRASS 90 NO LEAD	38.5100	38.51
2120	1	EA	2" THD NYLON COMBO ARV D040P	466.9400	466.94
2130	1	EA	2" SCH80 PVC 90 FXF	11.1700	11.17
2140	20	FT	2" SCH80 CPVC PIPE BE	8.9900	179.80
2150	1	EA	2"X2" CPLG CI/PVCXCI/PVC 56-22	5.7200	5.72
2160	1	EA	2" SCH80 PVC 90 HXH	6.3700	6.37
2170	2	EA	2" SCH80 CPVC 90 HXH	39.7600	79.52
2180	1	EA	2"X CLOSE SCH80 PVC NIPPLE	3.5300	3.53
2190	1	EA	2" PERFORATED GALV VENT CAP W/STAINLESS STEEL SCREEN	28.9100	28.91
2200	1	EA	10"X24"X30" BACKFLOW CAGE BP-2 LIFT OFF	324.8000	324.80
			DOUBLE CHECK		
2240	1	EA	6" RED PRS BFP W/OSY 375OSY	5,124.0900	5,124.09
2250	4	EA	6" FLG 90 C110	199.2200	796.88
2260	2	EA	6" FLGXFLG DIP 5'00"	622.2900	1,244.58
2270	2	EA	6" FLGXFLG DIP 4'00"	551.1400	1,102.28
2280	2	EA	6" MJXFLG ADPT C153	98.7400	197.48
2290	10	EA	6"X1/8" FLG FF NEOPRENE GASKET	2.7400	27.40
2300	10	EA	6"-8" FLG BOLT KIT HDG A307B SET	26.5200	265.20
2310	2	EA	6"STAR GRIP MJ REST PVC 4000HD	38.8800	77.76
2320	2	EA	6" MJ REGULAR ACC LESS GLAND	23.7400	47.48
2330	2	EA	PS-100-S ADJ PIPE SUPPORT	68.4700	136.94
2350	1	EA	6" FLG BOLT KIT HDG A307A W/FF 1/8" MAG SBR GASKET PIZZA BOX STYLE	21.3500	21.35
2360	11	EA	6" STAR GRIP MJ REST DIP 3000	30.2700	332.97
2370	11	EA	6" MJ REGULAR ACC LESS GLAND	23.7400	261.14
			POLY ABOVE		
2390	2	EA	2"X100' POLY TAPE	5.5000	11.00
2400	1	EA	3"X1000' WATER DETECTOR TAPE	44.1000	44.10
2410	1	EA	12GA TRACER WIRE BLUE 500'	105.0000	105.00
			8" PW		
2450	432	FT	8" RJ DIP TR FLEX PR350	39.5900	17,102.88
2460	1	EA	8" MJ 45 C153	145.5500	145.55
2470	4	EA	8" MJ 90 C153	178.0800	712.32
2480	1	EA	8"X2" MJ TAPT CAP C153	111.8700	111.87
2490	1	EA	2"X1" GALV HEX BUSHING	10.0400	10.04
2500	3	EA	8"X2" MJ TAPT CAP C153	111.8700	335.61
2510	5	EA	8"X2" MJ TAPT CAP C153	111.8700	559.35
2520	6	EA	8" MJ LONG SLEEVE C153	179.7900	1,078.74
2530	1	EA	8"X6" MJ TEE C153	219.1800	219.18
2540	7	EA	8" MJ TEE C153	264.8400	1,853.88
2550	6	EA	8 MJ GV O/L A2361-23 SS/EPDM EVERDUR STEM	1,216.8100	7,300.86
2560	7	EA	BLACK POLY LID F/562A VLV BOX CHANDLER SPEC	45.0000	315.00
2570	7	EA	562A SLIP VB TOP L/LID	75.0400	525.28
2580	7	EA	562AB SLIP VLV BOX BOTTOM	75.0400	525.28
2590	7	EA	DC457 BLUE DEBRIS CAP	65.2000	456.40

ALL STOCK DELIVERIES ARE SUBJECT TO SHIPPING CHARGES

All PVC and HDPE material is quoted for shipment within 7 days of quote/bid date. All other material is quoted for shipment within 30 days of quote/bid date. After 7 days for PVC and HDPE or 30 days for all other material, ALL quoted prices are subject to review based on current market conditions.

CUSTOMER NO	JOB NAME	QUOTE NO	QUOTE DATE	PAGE
221530	CHANDLER RWIF 90%	6179292	3/17/22	6

LINE	QTY	UOM	DESCRIPTION	UNIT PRICE	TOTAL PRICE
2600	30	FT	5"X5' CISP SH	42.4800	1,274.40
2610	7	EA	8' VALVE STEM EXT	188.7400	1,321.18
2620	7	EA	SM DIRT RING F/VSE	44.8100	313.67
2630	1	EA	8" MJ WYE C153	351.0300	351.03
2640	64	EA	8" STAR GRIP MJ REST DIP 3000	45.4900	2,911.36
2650	64	EA	8" MJ REGULAR ACC LESS GLAND	26.7000	1,708.80
2660	1	EA	3"X1000' WATER DETECTOR TAPE	44.1000	44.10
2670	600	FT	3-8" BLACK POLYWRAP 20"X300' PERF 20' 388-9943	.4400	264.00
2680	6	EA	2"X100' POLY TAPE	5.5000	33.00
2690	1	EA	12GA TRACER WIRE BLUE 500'	105.0000	105.00
			SURFACE WATER		
2730	2	EA	24" FLGXFLG DIP 6'00" P401	5,698.5300	11,397.06
2740	576	FT	24" RJ DIP TR FLEX P401 PR250	238.9300	137,623.68
2750	4	EA	24" FLGXPE DIP 8'00" P401	5,330.2500	21,321.00
2760	1	EA	24" MJ 11-1/4 P401 C153	3,054.5800	3,054.58
2770	4	EA	24" MJ 22-1/2 P401 C153	3,052.2500	12,209.00
2780	2	EA	24" MJ 45 P401 C153	3,127.5900	6,255.18
2790	1	EA	24" MJ 90 P401 C153	4,216.2600	4,216.26
2800	1	EA	24X2 TAPT BLIND FLG P401 C110	5,416.4100	5,416.41
2810	4	EA	24"X2" TAP BLIND FLG C110	1,495.1900	5,980.76
2820	2	EA	24" MJ LONG SLEEVE P401 C153	2,871.1900	5,742.38
2830	2	EA	24" MJ TEE P401 C153	5,039.7700	10,079.54
2840	2	EA	24X2 IP J979 BRZ SDL F/AC/DIP DOUBLE STRAP 24.00-25.80	1,047.4200	2,094.84
2850	2	EA	2" BALL CORP MIPXPJC NL	333.9900	667.98
2860	2	EA	2" CPLG PJCXPJC E2609 LOW LEAD	133.0000	266.00
2870	40	FT	2X20' TYPE K HARD COPPER TUBE	19.4200	776.80
2880	2	EA	2" COPPER SWEAT 90	23.7000	47.40
2890	2	EA	2" COPPER SWEAT 90	23.7000	47.40
2900	2	EA	2" BALL VALVE PJCXFIP P-25172N LOW LEAD	347.8300	695.66
2910	2	EA	2"X6" BRASS NIPPLE	39.5600	79.12
2920	2	EA	2" BRASS 90 NO LEAD	38.5100	77.02
2930	2	EA	2" THD NYLON COMBO ARV D040P	466.9400	933.88
2940	2	EA	2" SCH80 PVC 90 FXF	11.1700	22.34
2950	40	FT	2" SCH80 CPVC PIPE BE	8.9900	359.60
2960	2	EA	2"X2" CPLG CI/PVCXCI/PVC 56-22	5.7200	11.44
2970	2	EA	2" SCH80 PVC 90 HXH	6.3700	12.74
2980	4	EA	2" SCH80 CPVC 90 HXH	39.7600	159.04
2990	2	EA	2"X CLOSE SCH80 PVC NIPPLE	3.5300	7.06
3000	2	EA	2" PERFORATED GALV VENT CAP W/STAINLESS STEEL SCREEN	28.9100	57.82
3010	2	EA	#4 CONC MB 22-3/4X33-1/2X12	72.7300	145.46
3020	2	EA	BENT STEEL LID F/#4 CONC MB	173.6200	347.24
3030	4	EA	24" FLG BOLT KIT HDG A307B W/FF 1/8" NEOPRENE GSKT PIZZA BOX STYLE	261.1100	1,044.44
3040	4	EA	24"X1/8" FLG FF NEOPRENE GSKT	68.0000	272.00
3050	1	EA	24" FLG KIT SS BOLTS W/EPDM	985.7100	985.71
3060	28	EA	24" STAR GRIP MJ REST DIP 3000	454.5900	12,728.52
3070	28	EA	24" MJ REG ACC LESS GLAND	80.7000	2,259.60
3080	1	EA	6"X1000' WATER DET TAPE	180.0000	180.00
3090	5	FT	24" BLK POLYWRAP 54"X150'	1.2300	6.15
3100	6	EA	2"X100' POLY TAPE	5.5000	33.00
3110	2	EA	12GA TRACER WIRE BLUE 500'	105.0000	210.00
			STORM		
3150	260	FT	18" N12 AASHTO M294 PIPE IB/WT	24.3900	6,341.40
3160	1	EA	18" N12 45 WT 1-PIECE MITERED FABRICATED 1897AN65BB	572.3000	572.30
3170	2	EA	18" WATERSTOP GASKET 1802PS	80.3700	160.74

ALL STOCK DELIVERIES ARE SUBJECT TO SHIPPING CHARGES

All PVC and HDPE material is quoted for shipment within 7 days of quote/bid date. All other material is quoted for shipment within 30 days of quote/bid date.
After 7 days for PVC and HDPE or 30 days for all other material, ALL quoted prices are subject to review based on current market conditions.

CUSTOMER NO	JOB NAME	QUOTE NO	QUOTE DATE	PAGE
221530	CHANDLER RWIF 90%	6179292	3/17/22	7

LINE	QTY	UOM	DESCRIPTION	UNIT PRICE	TOTAL PRICE

Subtotal:	723,104.46
Tax:	.00
Bid Total:	723,104.46

ALL STOCK DELIVERIES ARE SUBJECT TO SHIPPING CHARGES

All PVC and HDPE material is quoted for shipment within 7 days of quote/bid date. All other material is quoted for shipment within 30 days of quote/bid date.
After 7 days for PVC and HDPE or 30 days for all other material, ALL quoted prices are subject to review based on current market conditions.

Ent By CN1 3/29/22 17:33:53

A Forterra Company

March 14, 2022

To: Valued Distribution Partners and Customers
Re: Scrap Surcharge

As you are aware, the Russia-Ukraine conflict has resulted in additional disruptions to an already stretched supply chain. This conflict has impacted multiple inputs to our manufacturing process, the biggest of which is our scrap metal costs. Given the current situation, demand for steel and iron to be supplied by other countries is quickly growing. Those manufacturers are looking to buy more scrap, the same scrap we buy for daily operations. As a result, scrap costs are rising very quickly. The restrictions on pig iron coming from Russia and Ukraine further exacerbates the demand for scrap.

Effective April 1, 2022, all product shipping from our facilities will incur a scrap surcharge to cover these increased scrap costs. While we hope this is a short-lived market condition, we have to prepare for the likely reality that this persists until the conflict has come to resolution, global sanctions on that region of the world are lifted, or some other market mechanism helps compensate for the increase in demand.

That surcharge will be based on the national increase in shredded scrap pricing as tracked by Fastmarkets (https:/www.fastmarkets.com). The prior month average is released on the first business day of the month (i.e., the increase for March will be confirmed on April 1st). It will be communicated on the second of the month and made effective the fifth day of the month. The shredded scrap index is highly correlated to the busheling index which was up $175/ton between February and March. Because of the even higher demand for busheling, we expect the shredded index to be up, but not more than busheling. Based on what we know as of this time, a good planning number should be between $125-175/ton. All surcharges will be noted as a separate line item on your invoice.

As you know, our typical approach is to absorb increases and movements in raw materials pricing both small and large; however, the movement over the last two weeks is historically unprecedented. We believe a surcharge is the most effective mechanism for an adjustment because we intend for this to be temporary. When scrap pricing returns to February 2022 levels, we will pull back the surcharge. Should the conflict last longer and scrap prices remain higher for an extended period of time, we may consider converting the surcharge to a more permanent price increase, but it would be premature to determine that now.

Also note, we will continue to strictly enforce our terms and conditions. If you wish to cancel your order for Made to Stock (MTS) material in lieu of paying a surcharge, you may do so with no cancellation fees. Cancellation fees still apply to Made to Order (MTO) materials.

We regret having to take these actions; however, the metals markets have been greatly impacted by the situation abroad. We appreciate your support and patience while we all navigate these uncertain times.

Best Regards,

Vik Bhatia
President
214-693-1578

Howard Smith
Sr. Vice President of Marketing & Sales
919-757-5411

Arizona Materials

Customer Service: 602-278-7777
Fax: 602-278-3077
3636 S 43rd Ave
Phoenix, AZ 85009

PROJECT QUOTATION

CUSTOMER:	McCarthy Building Companies, Inc.	**PROJECT:**	Interconnect Facility GMP 2
Contact:	Rachael Burkett	Address:	Chandler & Airport Campus
Phone:	480-636-0714	City,State,Zip:	CHANDLER, AZ, 8500
Fax:		Quote ID:	3481 (21)
Email:	rburkett@mccarthy.com	Total Qty:	1,600 CYD (Estimated)

Concrete Products

Qty	Description	Mix Id	Price	Comments
1492	5000 PSI 1" Rock W/Ash	15000	$148.50	CLASS A 5000 .45 W/C RATIO
8	5000 PSI Flowable	15050	$153.50	CLASS A 5000 .45 W/C RATIO FLOW
92	MAG-A 3000 PSI	13004	$124.50	CLASS B 3000 .55 W/C RATIO SPEC
8	3000 PSI MAG A Flowable	13054	$129.50	CLASS B 3000 .55 W/C RATIO SPEC FLOW
	Chilled Water (Per Per Yard)		$0.00	
	Hot Water (Per Per Yard)		$1.00	
	SHORTLOAD CHARGES (Per Each)		$200.00	
	Nitro (Per Per Yard)		$9.50	
	Fuel Surcharges (Per Each)		$15.00	
	Environmental (Per Each)		$25.00	

AIR ENTRAINMENT IS AVAILABLE WITH A $20 PER YARD ADD.

Add-On Products

Price Increase and Quote Expiration

Concrete pricing subject to change in the event of cement / fly ash allocations and / or unanticipated cement / fly ash price increases.	Price Increase #1 : Add $8.00/CYD on 10/01/2022 Price Increase #2 : Add $8.00/CYD on 06/01/2023 Price Increase #3 : Add $8.00/CYD on 01/01/2024 **All prices expire on quoted expiration date: 05/01/2024**

Charges and Fees

Arizona Materials accepts no responsiblity for any damage to curb and beyond curb line. It will be Buyers reponsibility to contact Arizona Materials Quality Control Department with any concrete issue/concerns within 48 hours after placement. Buyer is responsible to provide safe access to point of delivery. All materials are produced in conformance with ACI / ASTM standards. Mixes quoted below, unless otherwise stated, conform to no specific water cement ratio, minimum sack content, shrinkage, temperature requirement, or the plans and specifications of this project.
All colored concrete loads have a 3 yard minimum.
Arizona Materials cannot guarantee compressive strengths of 5000 PSI or below for loads less than 3 yards.
5000 PSI or above must be 5 yards or more to quarantee compressive strength.

Payment is due and payable on or before the 15th day of the month following to receive 2% discount. Account must be current in full to be eligible to apply discount. A service charge not to exceed the maximum allowed by law applies on unpaid invoice amounts beginning the 1st day of the month following due date and daily thereafter until paid in full. Should litigation be commenced to enforce payment, the prevailing party is entitled to reimbursement of reasonable attorney fees and court costs.

Buyer has 30 days to validate quote with P.O. , signing issued quote, or written verification.

Prepared and Submitted By:		Acceptance (void if not accepted before 04/03/2022)	
Name:	Frank Campbell	Signature _____	Date _____
Date:	03/04/2022	Print Name _____	
Phone:	6027217259	Title _____	
Fax:		Company _____	
Email:	fcampbell@azmatl.com		

Corporate Offices:
3636 S. 43rd Avenue
Phoenix, AZ 85009
Phone: 602-278-7777
Fax: 602-442-6905
www□r□o□□□ □ter□s□et

Terms and Conditions of Sale

Additives
Hot / Chilled Water - $1.00 per cubic yard
Nitrogen Cooling - $9.50 per cubic yard
Non-Chloride Accelerator - $1.50 per unit
Recover - $2.00 per 1/2 Hour

Fiber
Micro Fiber - $7.50 per pound
Macro Fiber (Structural) - Priced as Quoted

Color
Standard Liquid Color - See mix detail for per yard pricing
Color Washout - $25.00 per load

Delivery
Fuel Surcharge - $15.00 per load
Wash Out System Buckets - $25.00 per load (requested at time of order)
Standby Charges - $1.50 per minute beyond 6 minutes per cubic yard
Short Load Charges - 6 yards or less $200.00 per load
Environmental Fee - $25.00 per load

Weekend Delivery - $50.00 per load
Plant Opening Charge - $500.00/hr, 4 hour minimum
Sunday / Holiday Opening - $750.00/hr, 4 hour minimum

All order backs/split loads under 11 yds on one order are subject to Short Load Charges.

Concrete Pricing subject to change in the event of cement / fly ash allocations and/or unanticipated cement / fly ash price increases.

All materials are produced in conformance with ACI / ASTM Standards.

Contractor is responsible to provide safe access to the point of delivery.

Arizona Materials accepts no responsibility for damages to any curb and beyond the curb line.

It is Contractors responsibility to contact Arizona Materials Quality Control Department with any concrete issues/concerns no later than 48 Hours after placement.

Hanson
HEIDELBERGCEMENT Group

Scan the QR code to view our digital solutions!

Quotation No. □□□□□□

S□es Rep
Clark, Brian

Ph:(480) 639-7165

□□□□ S□McC□□toc□ Dr□□□□□
Te□pe□□r□o□□ □□□□□
S□es□□□□□□□□□□□□□ Co□crete D□sp□tch□ □□□□□□□□□□□□□
□□□□ □□□□□□□□□□□□

JO□ □□M□	MAP	JOB / P.O. NUMBER	QUOTE DATE
CHANDLER REC. WATER INTERCONNECT FAC.		□□□□□□	□□□□□□□□□
JO□ □OC□T□O□			JOB START DATE
SWC QUEEN CREEK RD & MCQUEEN RD CHANDLER, AZ			Octo□er □□□□□□

CUSTOM□R MCC□RTH□ □U□D□□ COMP□□□S □□C
CO□T□CT
STR□□T □DDR□SS □□□□ □ □□TH ST ST□ □□□
C□T□□ST□T□□□P PHO□□□ □□□ □□□□□□□□□□
CUSTOM□R □O□ □□□□□□□

BID DATE
M□rch □□□□□□□

EXPIRATION DATE
M□rch □□□□□□□
□□See □sc□□tor C□use

QTY	UOM	MATERIAL DESCRIPTION	PRODUCT CODE	PRICE
□	DS	□O□□CH□ORD□ □CC□□□R□TOR □P□R U□□T□	□□□□	□□□□
□	□□	W□T□R □HOT □P□R □□RD	□□□□	□□□□
□	DS	R□T□RD□R □□□□□□ P□R □□RD□	□□□□	□□□□
□	□□	W□T□R□CH□□□□D□P□R □□RD	□□□□	□□□□
□	□□	□C□ □P□R □□□P□R □□RD□	□□□□	□□□□
□	□□	□□TRO□	□□TRO	□□□□
□	□□	□□□□R □ORC□ □□□	□□□□	□□□□
□	□□	□□□□R □ORC□ □□□	□□□□	□□□□
□	□□	ST□□D□□□ □CO□CR□T□ □P□R M□□UT□	□□□□	□□□□
□	□□	C□□C□□ ORD□R CH□R□□ □□□□T □□□ □□□□	□□□□	□□□□
□	□□	C□□C□□ ORD□R CH□R□□ □P□R □□RD □□□	□□□□	□□□□
□	□D	□□□□RO□M□□T□□ □□□ P□□D	□□□□	□□□□
□	□D	□U□□ SURCH□R□□ □P□□D	□□□□	□□□□
□□□□	C□	□□□ S□□□□□”□□□□□ W□C	□□□□□□□	□□□□□
□	C□	□□□ S□C□□□□□” W□HR□□□□□ W□C	□□□□□□□	□□□□□
□□□	C□	□□□ S□□□□□”□□□□□ W□C	□□□□□□□	□□□□□
□	C□	□□□ S□□□□□” W□MR□□□□□ W□C	□□□□□□□	□□□□□

□DD□T□O□□□ COMM□□TS

PRICES DO NOT INCLUDE TAX, IF APPLICABLE RATE IS 8.60%

Escalation Notes:

PR□C□ □□CR□□S□S□□□□□C□ O□ □□□□□□□□□□□□C□ O□ □□□□□□□□T□D □□□□□□□□

S□□□ture □ Brian Clark D□te□ 3/25/2022

S□□□ture o□□u□er □ccept□□ce o□th□s □uote□ □□□□□□□□□□□□□□□□□□□□□□□□ D□te□ _____

CONCRETE TERMS AND CONDITIONS

- **THIS QUOTE IS SUBJECT TO THE BELOW TERMS AND CONDITIONS AND THE ATTACHED GENERAL TERMS AND CONDITIONS OF SALE.**
- **ALL ORDERS AND QUOTED PRICES ARE SUBJECT TO CREDIT APPROVAL.**
- St□□d □□ Ch□r□es□ □□rst □□e □□□□ □utes per □□rd □t □o ch□r□e□ There□□ter □□□□□ per □ □ute □□□□□□□□ Per Hour□□
- C□□ce□□t□o□s w□th□ □□ hours □re su□ject to □ee□
- Orders o□□ □□rds or □ess □re □ot □u□r□□teed □□d order □□c□s w□□□e su□ject to □□ □dd□t□o□□□short □□d □ee□
- There □s □ re□u□red □ □□rd □ □□□□u□ □□d s□□e □or □□□de□□er□es o□h□h□per□or□ □□ce co□crete □stre□□ths □□ e□cess o□□□□□ PS□or s□c□ co□te□t □□o□e □□□□□htwe□ht co□crete□or co□or co□crete□
- Custo□er □s respo□s□□□e □or pro□d□□□ □co□t□□□ed □re□ □or the re□d□ □ □truc□ w□sh out □□d to proper□□ d□spose o□the w□stew□ter□
- Custo□er □s respo□s□□□e □or □s□e wor□e□□ro□□ e□t□
- T□RMS□□□T □□ □ROM □□□O□C□ D□T□
- Short □o□d Ch□r□es□□□□□o□d □or □C□ or □ess□
- Th□s □uote □s □□□d □or □□ d□□s □o□ow□□□ the □uote d□te □sted □□o□e□

NOTES AND COMMENTS

- **PLEASE CONTACT THE SALES DEPARTMENT PRIOR TO ORDERING FOR A PROJECT THAT WE ARE GOING TO SUPPLY.**
- P□e□se order □□ product codes whe□ □□e□□ M□□ des□□□s □re □□□□□□□e upo□ re□uest□
- Ch□□□es □□ the ce□ e□t□□ous co□te□t or □d□ □□ture dos□□es w□□□e ch□r□ed to the custo□er □ccord□□□□□
- The p□ce□ e□t□□□sh□□□d o□er□□□esthet□cs o□th□s product □re the respo□s□□□t□ o□the □u□er□
- Co□crete □s □ot w□rr□□ted to □e □ccept□□e □or use □□ the spec□□c e□□ro□□ e□t or so□□s co□d□□o□□

GENERAL TERMS AND CONDITIONS OF SALE

1. **Applicability**. All references in this document to "Seller" shall include Lehigh Hanson, Inc. and/or its subsidiaries or affiliates (including any division of the foregoing) performing any or all of the scope hereunder, whether or not specifically identified herein. Buyer agrees that the following terms and conditions will apply to all sales of goods or services ("Sales") by Seller to Buyer and any of its subsidiaries or affiliates. By ordering or accepting the goods described herein, Buyer is accepting and agreeing to these terms and conditions. Buyer agrees that any terms and conditions appearing on any document submitted by Buyer which are in conflict with (a) the terms and conditions contained herein or (b) any credit application, invoice, or bill of lading submitted by Seller shall be expressly rejected and shall not constitute terms of any Sales. The terms and conditions of any written agreement signed by Seller and Buyer shall prevail to the extent of any inconsistency with these terms and conditions. Fulfillment of Buyer's order does not constitute acceptance of any of Buyer's terms and conditions and does not serve to modify or amend this document.

2. **Governing Law/Payment Address.** All matters between Seller and Buyer, including venue, will be governed by the laws of the state in which the delivery of goods or services is to occur. All indebtedness due is payable at Seller's office identified in the invoice or billing, unless and until Seller designates a different place of payment. Invoices shall be deemed correct unless contested in writing within seven (7) business days of receipt.

3. **Prices.** Prices in Seller's quotations are subject to change without notice, and all quotations expire and become invalid if not accepted within 30 days from the date of issue, unless otherwise noted by Seller in writing. Price extensions when made are for Buyer's convenience only, and they, as well as any mathematical or clerical errors, are not binding on Seller. Unless expressly written otherwise, prices shown do not include any sales, excise, or other governmental tax or charge payable by Seller to Federal, State or local authority. Buyer agrees to reimburse Seller for any such tax or to provide Seller with an acceptable and authorized tax exemption certificate. Title and risk of loss to goods shall transfer to Buyer upon Seller's delivery (whether F.O.B. Seller's plant or delivery by Seller at location designated by Buyer). Unless otherwise specified herein, all deliveries of goods shall be made FOB Buyer's trucks/railcars at Seller's plant. Seller's weights taken by track scale in the case of rail shipments shall govern.

4. **Buyer Financial Condition.** Any order for goods or services by Buyer shall constitute a representation that Buyer is solvent. In addition to Seller's right under the Uniform Commercial Code, if, in the judgment of Seller, Buyer's financial condition at the time of shipment does not justify the terms of payment specified, Seller reserves the right to require from Buyer full or partial cash payment or other adequate assurance of performance before shipment. Seller reserves the right to suspend its performance until such payment or adequate assurance of performance has been received. Seller maintains the right to periodically review and adapt payment terms as necessary and to curtail, modify or eliminate any credit availability or credit limit within its sole discretion. Buyer shall provide Seller all information requested by Seller to prepare and effect any notices required to perfect lien rights under applicable law. Upon request, Buyer shall provide Seller copies of any payment bonds.

5. **Security Interest**. To secure payment for all purchases from Seller, now and in the future, Buyer hereby grants Seller a continuing security interest in all of Buyer's presently owned or hereafter acquired (a) goods and tangible personal property, (b) rights to payment of cash money, accounts, deposits, and refunds, (c) instruments, (d) promissory notes, (e) Chattel paper (electronic and tangible), (f) documents, (g) books and records, (h) accounts, (i) accounts receivables, (j) equipment, (k) inventory, (l) commercial tort claims, (m) general intangibles, (n) payment intangibles, and (o) software, whether now existing or later acquired, together with all proceeds, substitutions, and all support obligations thereof. Seller's security interest is explicitly limited to outstanding obligations between Buyer and Seller.

6. **Payment Terms**. Buyer agrees to pay Seller all costs and expenses of collection, suit, or other legal action, including all actual attorneys' and paralegal fees, incurred through trial, on appeal, or in any administrative or bankruptcy proceedings brought as a result of the commercial relationship between them. Any cause of action which Seller may have against Buyer may be assigned by Seller. If Buyer's credit application is approved by Seller, then payment terms are Net-30 days, unless otherwise stated on the invoice or other writing from Seller. Payment is due in the form of cash, cash equivalent, check, or money order. Seller may apply Buyer's payment against any open charges within Seller's sole discretion. Seller reserves the right, even after partial payment on account hereof, to require from Buyer payment in advance or satisfactory security or guarantee of the due performance any and all of Buyer's obligations hereunder. Refusal to make such payment in advance or to furnish such satisfactory security guarantee or the failure of Buyer to perform any of its obligations under this or any other existing agreement of sale will entitle Seller to withhold future deliveries or to terminate this agreement of sale, and any unpaid amounts shall thereupon become due and payable without prejudice to any claim for damages the Seller may be entitled to make. On past due accounts Seller may impose a monthly finance charge of the higher of one and one half percent per month or the maximum interest charge permitted by the law governing the account between Buyer and Seller. The finance charge shall continue to accrue after Seller obtains a judgment against Buyer. Seller has the right to exercise setoff or recoupment when needed to satisfy an outstanding debt. All agreements between Seller and Buyer (and any affiliate or subsidiary or Buyer) shall be considered as one single integrated agreement between Seller and Buyer. Buyer agrees to pay reasonable storage fees if materials are stored on Seller's yard more than sixty (60) days after Seller is ready for delivery.

7. **Delivered Goods**. For goods delivered to Buyer by Seller, (a) reasonable unloading time (determined in Seller's sole discretion) shall be included in price of goods; (b) additional unloading time shall be charged at the rate quoted by Seller, or, if not quoted, the standard rate per hour; (c) Seller does not guarantee arrival time or the rate of delivery; (d) Seller shall not be liable for any delays in delivery or loss or damage in transit; (e) delivered prices are based on information provided by Buyer, and if location of project varies, freight will be adjusted and billed accordingly; (f) deliveries will be made only to points which, in Seller's opinion, are reasonably accessible to Seller's equipment under its own power; (g) SELLER IN NO EVENT SHALL BE LIABLE FOR DAMAGE TO SIDEWALKS AND DRIVEWAYS, BUYER ASSUMES ALL RISKS OF AND RELEASES SELLER, SELLER'S AFFILIATES AND THEIR RESPECTIVE EMPLOYEES AND AGENTS ("SELLER INDEMNITEES"), AND AGREES TO INDEMNIFY, DEFEND, AND HOLD HARMLESS SELLER INDEMNITEES FROM AND AGAINST ALL LIABILITY, CLAIMS, FEES, AND EXPENSES FOR, ALL INJURIES TO, DEATH OF, ANY PERSONS AND LOSS OF OR DAMAGE TO PROPERTY, ARISING FROM OR RELATED TO SELLER'S PRESENCE ON, USE OF, OR ACCESS TO THE JOB SITE SPECIFIED BY BUYER FOR DELIVERY, except to the extent any damage arises solely from Seller's negligence; (h) Buyer agrees to pay for all repairs to Seller's trucks or equipment resulting from Buyer's method of unloading goods; (i) trucks which become stuck on the site will be pulled out by a bona-fide wrecker at Buyer's expense; (j) Seller reserves its right to discontinue deliveries of materials until the cause of damage to its truck has been eliminated; (k) Buyer is responsible to provide a safe working environment at the delivery location; and (l) Buyer shall provide an authorized person to sign the Delivery Ticket and a signature on one Delivery Ticket shall be deemed a signature on all Delivery Tickets for all goods received that day.

8. **Concrete**. For concrete sold to Buyer by Seller, (a) concrete mix is designed to meet required strength when placed and tested according to American Concrete Institute standards (ACI) and American Standard of Testing and Measurement specifications (ASTM); (b) Buyer waives and releases liability and voids the limited warranty below if water and/or other foreign material is added by Buyer or at the request of Buyer or its employees, or agents; (c) Seller reserves the right to adjust prices if cement and fly ash costs increase due to a shortage or delay in availability from usual sources; (d) Seller reserves the right

to test all in-place concrete for conformance to agreed specifications; (e) Seller shall not be responsible for any alleged failure to meet specifications of concrete if the concrete have not been conveyed, placed, cured, and protected in accordance with the most recent revision of the ACI Standards; (f) Seller shall not be responsible for any alleged failure to meet specifications if concrete are placed with a slump greater than indicated on the mix design; (g) Seller does not warrant concrete shrinkage, temperature, or the water-to-cement ratio, except as otherwise stated in specifications provided to Seller in advance, concrete mix designs, or Seller's Sales Quotation; (h) Seller is not responsible for variations in color, "pop-outs," or cracking; and (i) all claims regarding delivery, billing, or product quality must be submitted to Seller in writing within 30 days from the date of delivery of the concrete or such claims shall be deemed waived.

9. **Aggregates**. For aggregates sold by Seller, (a) Seller takes no responsibility for degradation or segregation of aggregates after delivery due to equipment or excess handling at the project site; and (b) Seller only warrants the physical properties of the goods (gradation, sand equivalent, or cleanliness value) at the point of delivery to Buyer.

10. **Concrete Blocks and Recycled Materials**. All concrete blocks and recycled materials are sold as-is with all faults and size, shape, and color of materials may vary.

11. **Limited Warranty. THE FOLLOWING IS IN LIEU OF ALL WARRANTIES, EXPRESS, IMPLIED, OR STATUTORY, INCLUDING BUT NOT LIMITED TO ANY EXPRESS OR IMPLIED WARRANTIES OF MERCHANTABILITY OR FITNESS FOR A PARTICULAR PURPOSE AND ANY OTHER OBLIGATION ON THE PART OF THE SELLER.** Seller warrants that at the time of delivery, the quality of materials and workmanship of Seller's goods or services will conform to the requirements of the specifications set forth in the applicable sales contract(s), quotation, or to Seller's standard manufacturing practice. If Seller's goods or services fail to conform, at time of delivery, to Seller's warranty, Seller's sole and exclusive liability will be, at Seller's sole discretion: (a) to repair or replace the non-conforming goods or services at a reasonable time, F.O.B. Seller's plant, or (b) to refund the purchase price for such non-conforming goods or services. Notice of defective goods or services must be given to Seller immediately upon discovery of the defect, provided, however, that notice of any defect must be given within thirty (30) days from the date of delivery. All scheduled dates are estimated, and in no event shall Seller be liable for any damages resulting from delays in providing goods or services.

12**. Limitation of Liability. SELLER'S LIABILITY ARISING OUT OF OR RELATED TO THE SALES, WHETHER IN CONTRACT, TORT, INDEMNITY, STRICT LIABILITY, OR ANY OTHER LEGAL THEORY, SHALL IN NO EVENT EXCEED THE PRICE OF THE SALES OR PORTION OF SUCH SALES ON WHICH SUCH LIABILITY IS BASED, AND BUYER WAIVES ANY CLAIM IN EXCESS OF THAT AMOUNT. IN NO EVENT SHALL SELLER BE LIABLE FOR LOST PROFITS, INDIRECT, SPECIAL, INCIDENTAL, OR CONSEQUENTIAL DAMAGES, LOSSES OR EXPENSES, DIRECTLY OR INDIRECTLY ARISING FROM THE SALE, HANDLING OR USE OF THE GOODS OR SERVICES OR FROM ANY OTHER CAUSE OR BREACH INCLUDING, BUT NOT LIMITED TO BREACH OF WARRANTY OR NEGLIGENCE.**

13. **Force Majeure**. Seller will not be responsible for delays in production or delivery for any reason resulting from acts of God, earthquakes, sabotage, fire, flood, epidemics/pandemics, strikes, lockouts, other labor issues of any kind, priorities, allocations, limitations or other restraints which affect manufacture or delivery, accidents, war, insurrection, delays in transportation, equipment failure, damage to equipment or facilities, shortage or delays of transportation, fuel, or materials, present or future laws and governmental interference or regulation, or for any other reason beyond Seller's reasonable control. Seller reserves the right to adjust prices due to delays, shortage, or increased costs of materials or transportation.

14**. Limitation of Action**. No legal action shall be brought by Buyer against Seller for any claim with respect to any sales more than one (1) year after delivery of goods or services. It is agreed that any cause of action with respect to such sales will accrue on the date of delivery. If any provision hereof is held by a court of competent jurisdiction to be illegal, void, or unenforceable, such provision will be of no force and effect, but the legality or unenforceability will have no effect upon and will not impair the enforceability of any other provision.

15. **Documents**. A counterpart of this document delivered by facsimile or electronic transmission shall be deemed an original document and be valid for all purposes. If Seller electronically stores this document, a reproduction from the scanned document shall be considered to be an original counterpart and shall be enforceable. The Electronic Signatures in Global and National Commerce Act (P.L. No. 106-229) or the Uniform Electronic Transactions Act (or its applicable state law equivalent) apply to this document and to all Sales. Electronic and digital signatures may be used by either party. As a standard practice, Seller offers electronic invoicing to customers. Buyer must contact Seller if Buyer does not wish to receive electronic invoicing. When applicable, the terms of Executive Order 11246 and 41 C.F.R. Part 60-1 shall apply to this document and to all Sales. Buyer and Seller represent and agree that there are no third party beneficiaries to this document and that Buyer and Seller are the sole intended beneficiaries of this document and all Sales.

16. **Quantity**. Buyer acknowledges that the amount of goods ordered by it has been determined by Buyer and not by Seller. Conversion of goods from yards to tons or tons to yards is the responsibility of Buyer. Buyer assumes full responsibility and shall hold Seller harmless regarding the adequacy of the amount of goods ordered. Buyer shall not be entitled to receive credit for returned goods. In Seller's sole discretion, Seller may accept returned goods but such return shall be subject to a restocking fee.

17. **Inspection**. Any inspection test or analysis required by Buyer must be specified in writing promptly after Buyer orders the goods and prior to shipment from Seller's plant. If not so made, Buyer waives any claim of failure of the goods to meet such inspection, test or analysis. Any expense of such inspection, test or analysis shall be paid by the Buyer. Seller reserves the right to test all in-place goods for conformance. Buyer shall notify Seller of intent to enter into any agreement with any agency to pave over Seller's base material prior to obtaining passing or failing certification. Upon paving over Seller's base material without obtaining passing or failing results, Buyer assumes any and all financial responsibility for repair and/or replacement of all materials. All claims regarding delivery, billing, or product quality must be submitted to Seller in writing within 30 days from the date the goods are received at Seller's plant, or such claims shall be deemed waived.

Ready Mix Concrete



DANGER

May cause cancer.
May cause damage to organs (lung) through prolonged or repeated exposure.
Causes severe skin burns and eye damage.
Causes serious eye irritation.

See SDS for further information

Prevention:	**Obtain special instructions before use. Do not handle until all safety precautions have been read and understood. Wash any exposed body parts after handling. Wear protective gloves, clothing, eye protection and face protection.**
Response:	**If exposed or concerned: Get medical advice/attention. If on skin: Take off contaminated clothing immediately and wash it before reuse. Wash exposed body parts thoroughly after handling. If in eyes: Rinse continuously with water for several minutes. Remove contact lenses, if present and easy to do.**
Storage:	**Restrict or control access to stockpile areas (store locked up). Engulfment hazard: To prevent burial or suffocation, do not enter a confined space, such as a silo, bulk truck or other storage container or vessel that stores or contains concrete without an effective procedure for assuring safety.**
Disposal:	**Dispose of contents/container in accordance with local, regional, national, and international regulations.**
Supplemental information:	**Before handling product determine appropriate ventilation or respiratory protection. Repeated inhalation of respirable crystalline silica (quartz) may cause lung cancer. Health risk is dependent upon work duration and levels of potential silica exposure in the workplace.**

Lehigh Hanson ● 300 E. John Carpenter Freeway, Suite 1645 ● Irving, TX 75062● www.lehighhanson.com ● 972-424-9300

HAZ-COM WARNING. Concrete, mortar, cement, and cement admixtures may contain crystalline silica. Prolonged and repeated breathing of crystalline silica dust may cause lung cancer or silicosis. Such products may also cause skin burns, serious eye, nose, and respiratory tract irritation and damage, and serious allergic skin reactions. Take appropriate safety precautions and use appropriate protective clothing and equipment when handling. Wash affected areas with water and seek medical attention if symptoms of exposure persist. Dispose waste according to Federal, State and Local regualtions. For detailed information, see the Safety Data Sheet before using or handling.

DANGER

May cause cancer.
May cause damage to organs (lung) through prolonged or repeated exposure.
Causes skin irritation and serious eye irritation.



Job Information Work Sheet

Hanson Aggregates LLC

Please Remit to: Justin Macy or Rene Rivas
Justin.Macy@lehighhanson.com / Rene.Rivas@lehighhanson.com

Please fill out ALL HIGHLIGHTED information for this job ☺

MUST BE RETURNED TO HANSON IN ORDER FOR MATERIAL TO BE SHIPPED

Customer: _____

Contact Code Person: _____ **E-Mail:** _____

Phone Number: _____ **Fax :** _____

Acct No: _____ **Date :** _____ **S/O#:** _____

Project Name: _____

Address : _____

City: _____ **State:** _____ **ZipCode:** _____

Job Number/PO#: _____

Project Type: **Private** { } **Public** { } **State/Local** { } **Federal** { } **Residential** { } **Bond Job** { }

Start Date: _____

Est. Amount: **$** _____

Owner Name: _____

Owner Address: _____

Lender/Bonding Co. : _____

Address: _____

Loan OR Bond #: _____

Gen./Direct Contractor : _____

Address: _____

Phone Number: _____

Company: **ALB Piping**
Jobname: **Chandler RWIF GMP**
Pricing Due: **3/25/22 5:00 P.M.**
DO NOT INSERT OR DELETE ROWS
IF NEW ROWS ARE NEEDED, USE ROWS AT END OF LIST

Total
Subtotal

Size	Description	Count	Bid Price	Total Bid Price	Filter	Notes
1/2	Type L Hard Copper Tube	24-LF	$ 5.00	$ 120.00	COPPER	***TERMS AT BOTTOM OF BID**
1	Type L Hard Copper Tube	92-LF	$ 11.00	$ 1,012.00	COPPER	
1	Type L Hard Copper Tube	1-LF	$ 11.00	$ 11.00	COPPER	
2	Type L Hard Copper Tube	101-LF	$ 27.00	$ 2,727.00	COPPER	
2	Sch 80 PVC PE Pipe	2-LF	$ 3.00	$ 6.00	PVC	
4	Sch 80 PVC PE Pipe	17-LF	$ 8.00	$ 136.00	PVC	
10x2' 0"	DI FxF Epoxy Lined/Primer Coat	1	$ 835.00	$ 835.00	DUCTILE	
12x2' 0"	DI FxF Epoxy Lined/Primer Coat	8	$ 1,077.00	$ 8,616.00	DUCTILE	
12x2' 6"	DI FxF Epoxy Lined/Primer Coat	3	$ 1,190.00	$ 3,570.00	DUCTILE	
12x2' 6"	DI FxF Epoxy Lined/Primer Coat ~FLxPE pipe spool	2	$ 861.00	$ 1,722.00	DUCTILE	
12x3' 0"	DI FxF Epoxy Lined/Primer Coat	20	$ 1,300.00	$ 26,000.00	DUCTILE	
12x3' 0"	DI FxF Epoxy Lined/Primer Coat ~FLxPE pipe spool	2	$ 973.00	$ 1,946.00	DUCTILE	
12x4' 0"	DI FxF Epoxy Lined/Primer Coat ~FLxPE spool w/ weep ring	4	$ 1,434.00	$ 5,736.00	DUCTILE	
12x4' 0"	DI FxF Epoxy Lined/Primer Coat ~FLxPE w/ weep ring	3	$ 1,434.00	$ 4,302.00	DUCTILE	
12x4' 6"	DI FxF Epoxy Lined/Primer Coat ~FLxPE pipe spool	2	$ 1,307.00	$ 2,614.00	DUCTILE	
12x5' 6"	DI FxF Epoxy Lined/Primer Coat	2	$ 1,857.00	$ 3,714.00	DUCTILE	
12x6' 0"	DI FxF Epoxy Lined/Primer Coat	1	$ 1,969.00	$ 1,969.00	DUCTILE	
12x6' 6"	DI FxF Epoxy Lined/Primer Coat	2	$ 2,080.00	$ 4,160.00	DUCTILE	
12x8' 0"	DI FxF Epoxy Lined/Primer Coat ~FLxPE spool w/ weep ring	1	$ 2,325.00	$ 2,325.00	DUCTILE	
14x1' 0"	DI FxF Epoxy Lined/Primer Coat ~PExFL pipe spool	1	$ 774.00	$ 774.00	DUCTILE	
14x1' 6"	DI FxF Epoxy Lined/Primer Coat	9	$ 1,384.00	$ 12,456.00	DUCTILE	
14x1' 6"	DI FxF Epoxy Lined/Primer Coat ~PExFL pipe spool	7	$ 917.00	$ 6,419.00	DUCTILE	
14x2' 0"	DI FxF Epoxy Lined/Primer Coat	6	$ 1,528.00	$ 9,168.00	DUCTILE	
14x2' 0"	DI FxF Epoxy Lined/Primer Coat ~FLxPE spool w/ weep ring	2	$ 1,353.00	$ 2,706.00	DUCTILE	
14x2' 0"	DI FxF Epoxy Lined/Primer Coat ~w/ 2" TOL for pressure guage	4	$ 1,838.00	$ 7,352.00	DUCTILE	
14x2' 6"	DI FxF Epoxy Lined/Primer Coat	1	$ 1,672.00	$ 1,672.00	DUCTILE	
14x4' 0"	DI FxF Epoxy Lined/Primer Coat	9	$ 2,104.00	$ 18,936.00	DUCTILE	
16x1' 6"	DI FxF Epoxy Lined/Primer Coat	1	$ 1,621.00	$ 1,621.00	DUCTILE	
16x2' 0"	DI FxF Epoxy Lined/Primer Coat	2	$ 1,785.00	$ 3,570.00	DUCTILE	
16x4' 0"	DI FxF Epoxy Lined/Primer Coat	1	$ 2,439.00	$ 2,439.00	DUCTILE	
16x4' 0"	DI FxF Epoxy Lined/Primer Coat ~FLxPE w/ weep ring	2	$ 2,223.00	$ 4,446.00	DUCTILE	
16x8' 6"	DI FxF Epoxy Lined/Primer Coat	1	$ 3,912.00	$ 3,912.00	DUCTILE	
18x3' 6"	DI FxF Epoxy Lined/Primer Coat	5	$ 2,677.00	$ 13,385.00	DUCTILE	
18x3' 6"	DI FxF Epoxy Lined/Primer Coat ~w/ 2" TOL for pressure guage & 3" tap for air/vacuum valve	3	$ 4,579.00	$ 13,737.00	DUCTILE	
18x4' 0"	DI FxF Epoxy Lined/Primer Coat	2	$ 2,869.00	$ 5,738.00	DUCTILE	
18x6' 6"	DI FxF Epoxy Lined/Primer Coat	5	$ 3,827.00	$ 19,135.00	DUCTILE	
18x7' 0"	DI FxF Epoxy Lined/Primer Coat	2	$ 4,018.00	$ 8,036.00	DUCTILE	
18x10' 6"	DI FxF Epoxy Lined/Primer Coat	1	$ 5,359.00	$ 5,359.00	DUCTILE	
18x12' 6"	DI FxF Epoxy Lined/Primer Coat	3	$ 6,125.00	$ 18,375.00	DUCTILE	
20x1' 6"	DI FxF Epoxy Lined/Primer Coat ~FLxPE spool w/ weep ring	4	$ 1,890.00	$ 7,560.00	DUCTILE	
24x1' 0"	DI FxF Epoxy Lined/Primer Coat ~PExPE	1	$ 632.00	$ 632.00	DUCTILE	
24x1' 6"	DI FxF Epoxy Lined/Primer Coat	4	$ 2,788.00	$ 11,152.00	DUCTILE	
24x1' 6"	DI FxF Epoxy Lined/Primer Coat ~FLxPE	5	$ 1,812.00	$ 9,060.00	DUCTILE	
24x1' 6"	DI FxF Epoxy Lined/Primer Coat ~FLxPE Spool	8	$ 1,812.00	$ 14,496.00	DUCTILE	
24x1' 6"	DI FxF Epoxy Lined/Primer Coat ~w/ 4" tap for air/vacuum valve	1	$ 4,306.00	$ 4,306.00	DUCTILE	
24x2' 0"	DI FxF Epoxy Lined/Primer Coat	3	$ 3,055.00	$ 9,165.00	DUCTILE	
24x2' 0"	DI FxF Epoxy Lined/Primer Coat ~FLxPE	1	$ 2,080.00	$ 2,080.00	DUCTILE	
24x2' 0"	DI FxF Epoxy Lined/Primer Coat ~w/ 4" tap for air/vacuum valve	1	$ 4,574.00	$ 4,574.00	DUCTILE	
24x2' 6"	DI FxF Epoxy Lined/Primer Coat	2	$ 3,323.00	$ 6,646.00	DUCTILE	
24x3' 0"	DI FxF Epoxy Lined/Primer Coat	19	$ 3,591.00	$ 68,229.00	DUCTILE	
24x3' 6"	DI FxF Epoxy Lined/Primer Coat	6	$ 3,858.00	$ 23,148.00	DUCTILE	
24x3' 6"	DI FxF Epoxy Lined/Primer Coat ~PExPE	1	$ 1,970.00	$ 1,970.00	DUCTILE	
24x3' 6"	DI FxF Epoxy Lined/Primer Coat ~w/ 4" tap for air/vacuum valve	1	$ 5,377.00	$ 5,377.00	DUCTILE	
24x4' 0"	DI FxF Epoxy Lined/Primer Coat	5	$ 4,126.00	$ 20,630.00	DUCTILE	
24x5' 0"	DI FxF Epoxy Lined/Primer Coat	1	$ 4,661.00	$ 4,661.00	DUCTILE	
24x5' 6"	DI FxF Epoxy Lined/Primer Coat	1	$ 4,929.00	$ 4,929.00	DUCTILE	
24x5' 6"	DI FxF Epoxy Lined/Primer Coat ~PExPE	1	$ 3,041.00	$ 3,041.00	DUCTILE	
24x6' 0"	DI FxF Epoxy Lined/Primer Coat	1	$ 5,197.00	$ 5,197.00	DUCTILE	
24x6' 6"	DI FxF Epoxy Lined/Primer Coat	2	$ 5,465.00	$ 10,930.00	DUCTILE	
24x7' 0"	DI FxF Epoxy Lined/Primer Coat	1	$ 5,732.00	$ 5,732.00	DUCTILE	
24x13' 6"	DI FxF Epoxy Lined/Primer Coat ~FLxPE	1	$ 8,237.00	$ 8,237.00	DUCTILE	
24x15' 0"	DI FxF Epoxy Lined/Primer Coat	1	$ 10,015.00	$ 10,015.00	DUCTILE	
24x17' 6"	DI FxF Epoxy Lined/Primer Coat ~PExPE	1	$ 9,466.00	$ 9,466.00	DUCTILE	
12	Ductile Iron Pipe Push On CL350	29-LF	$ 106.00	$ 3,074.00	DUCTILE	
14	Ductile Iron Pipe Push On CL350	18-LF	$ 147.00	$ 2,646.00	DUCTILE	
16	Ductile Iron Pipe Push On CL350	30-LF	$ 164.00	$ 4,920.00	DUCTILE	
1/4	Sch 80 CPVC PE Pipe	696-LF	$ 1.50	$ 1,044.00	CPVC	
1/2	Sch 80 CPVC PE Pipe	249-LF	$ 1.50	$ 373.50	CPVC	
3/4	Sch 80 CPVC PE Pipe	179-LF	$ 2.00	$ 358.00	CPVC	
1	Sch 80 CPVC PE Pipe	925-LF	$ 3.00	$ 2,775.00	CPVC	
1	Sch 80 CPVC PE Pipe ~	22-LF	$ 3.00	$ 66.00	CPVC	
1-1/2	Sch 80 CPVC PE Pipe	483-LF	$ 5.00	$ 2,415.00	CPVC	
1-1/2	Sch 80 CPVC PE Pipe ~	23-LF	$ 5.00	$ 115.00	CPVC	
2	Sch 80 CPVC PE Pipe	48-LF	$ 7.00	$ 336.00	CPVC	
2	Sch 80 CPVC PE Pipe ~	0-LF	$ 7.00	$ -	CPVC	
2-1/2	Sch 80 CPVC PE Pipe	28-LF	$ 10.00	$ 280.00	CPVC	
3	Sch 80 CPVC PE Pipe	37-LF	$ 12.00	$ 444.00	CPVC	
3	Sch 80 CPVC PE Pipe ~	19-LF	$ 12.00	$ 228.00	CPVC	
12	Sch 80 CPVC PE Pipe	329-LF	$ 118.00	$ 38,822.00	CPVC	
24	Sch 80 CPVC PE Pipe	132-LF	$ 530.00	$ 69,960.00	CPVC	
1/4	316 SS .065 Tubing	42-LF	$ 12.00	$ 504.00	SMALL BORE	
1	SS A312 316L Pipe Sch 40 T&C	599-LF	$ 23.00	$ 13,777.00	SMALL BORE	
1	SS A778 304 Pipe Sch 40 T&C	65-LF	$ 23.00	$ 1,495.00	SMALL BORE	
1x3	Victaulic Std Grv GxG Nipple	4	$ 25.00	$ 100.00	SMALL BORE	
12	FxF Epoxy/Primer 90 Ell	8	$ 1,523.00	$ 12,184.00	DUCTILE	
14	FxF Epoxy/Primer 90 Ell	9	$ 1,905.00	$ 17,145.00	DUCTILE	
16	FxF Epoxy/Primer 90 Ell	4	$ 2,337.00	$ 9,348.00	DUCTILE	
18	FxF Epoxy/Primer 90 Ell	9	$ 3,046.00	$ 27,414.00	DUCTILE	
24	FxF Epoxy/Primer 90 Ell	18	$ 5,709.00	$ 102,762.00	DUCTILE	

12	FxF Epoxy/Primer 45 Ell	1	$ 1,353.00	$ 1,353.00	DUCTILE
12	FxF Epoxy/Primer Tee	11	$ 2,164.00	$ 23,804.00	DUCTILE
14	FxF Epoxy/Primer Tee	3	$ 3,004.00	$ 9,012.00	DUCTILE
24	FxF Epoxy/Primer Tee	35	$ 7,926.00	$ 277,410.00	DUCTILE
12x10	FxF Epoxy/Primer Conc Red	2	$ 1,316.00	$ 2,632.00	DUCTILE
12x10	FxF Epoxy/Primer Conc Red ~w/ 2" TOL for pressure guage	4	$ 2,076.00	$ 8,304.00	DUCTILE
14x10	FxF Epoxy/Primer Conc Red ~w/ 2" TOL for pressure guage	3	$ 2,377.00	$ 7,131.00	DUCTILE
14x12	FxF Epoxy/Primer Conc Red	7	$ 1,551.00	$ 10,857.00	DUCTILE
16x12	FxF Epoxy/Primer Conc Red ~w/ 2" TOL for pressure guage	1	$ 2,683.00	$ 2,683.00	DUCTILE
18x12	FxF Epoxy/Primer Conc Red	3	$ 2,214.00	$ 6,642.00	DUCTILE
18x16	FxF Epoxy/Primer Conc Red	6	$ 2,453.00	$ 14,718.00	DUCTILE
24x12	FxF Epoxy/Primer Conc Red	4	$ 4,158.00	$ 16,632.00	DUCTILE
24x18	FxF Epoxy/Primer Conc Red	4	$ 4,409.00	$ 17,636.00	DUCTILE
24x20	FxF Epoxy/Primer Conc Red	4	$ 4,663.00	$ 18,652.00	DUCTILE
14	FxF Epoxy/Primer 22-1/2 Ell	8	$ 1,805.00	$ 14,440.00	DUCTILE
16	FxF Epoxy/Primer 22-1/2 Ell	1	$ 2,009.00	$ 2,009.00	DUCTILE
14x12	FxF Epoxy/Primer Red Tee	7	$ 2,949.00	$ 20,643.00	DUCTILE
16x12	FxF Epoxy/Primer Red Tee	1	$ 2,975.00	$ 2,975.00	DUCTILE
24x12	FxF Epoxy/Primer Red Tee	5	$ 5,603.00	$ 28,015.00	DUCTILE
24x16	FxF Epoxy/Primer Red Tee	2	$ 5,720.00	$ 11,440.00	DUCTILE
24x18	FxF Epoxy/Primer Red Tee	3	$ 8,669.00	$ 26,007.00	DUCTILE
24	MJxMJ Epoxy/Asphalt 45 Ell	2	$ 2,822.00	$ 5,644.00	DUCTILE
12	MJxMJ Epoxy/Asphalt 90 Ell	3	$ 986.00	$ 2,958.00	DUCTILE
16	MJxMJ Epoxy/Asphalt 90 Ell	4	$ 1,744.00	$ 6,976.00	DUCTILE
24	MJxMJ Epoxy/Asphalt 90 Ell	1	$ 3,804.00	$ 3,804.00	DUCTILE
12	MJxMJ Epoxy/Asphalt Tee	3	$ 1,203.00	$ 3,609.00	DUCTILE
14	MJxMJ Epoxy/Asphalt Tee	2	$ 1,786.00	$ 3,572.00	DUCTILE
1/2	Wrot Copper 90 Ell	24	$ 2.00	$ 48.00	COPPER
1	Wrot Copper 90 Ell	24	$ 11.00	$ 264.00	COPPER
2	Wrot Copper 90 Ell	22	$ 44.00	$ 968.00	COPPER
1	Wrot Copper Tee	8	$ 24.00	$ 192.00	COPPER
2	Wrot Copper Tee	2	$ 77.00	$ 154.00	COPPER
2x1	304 SS 150# Thd Hex Bushing	15	$ 38.00	$ 570.00	SMALL BORE
1	316 SS 150# Thd 90 Ell	60	$ 19.00	$ 1,140.00	SMALL BORE
1	316 SS 150# Thd Tee	40	$ 25.00	$ 1,000.00	SMALL BORE
1	316 SS 150# Thd Union	42	$ 48.00	$ 2,016.00	SMALL BORE
1x1/4	316 SS 150# Thd Hex Bushing	42	$ 13.00	$ 546.00	SMALL BORE
1	304 SS 6000# Thd Cross	15	$ 1,116.00	$ 16,740.00	SMALL BORE
1/4	CPVC Sch 80 90 Ell	78	$ 7.00	$ 546.00	CPVC
1/2	CPVC Sch 80 90 Ell	64	$ 3.00	$ 192.00	CVPC
3/4	CPVC Sch 80 90 Ell	10	$ 3.00	$ 30.00	CPVC
3/4	CPVC Sch 80 90 Ell ~	4	$ 3.00	$ 12.00	CPVC
1	CPVC Sch 80 90 Ell	176	$ 5.00	$ 880.00	CPVC
1	CPVC Sch 80 90 Ell ~	4	$ 5.00	$ 20.00	CPVC
1-1/2	CPVC Sch 80 90 Ell	54	$ 12.00	$ 648.00	CPVC
1-1/2	CPVC Sch 80 90 Ell ~	8	$ 12.00	$ 96.00	CPVC
2	CPVC Sch 80 90 Ell	37	$ 14.00	$ 518.00	CPVC
2-1/2	CPVC Sch 80 90 Ell	38	$ 32.00	$ 1,216.00	CPVC
3	CPVC Sch 80 90 Ell	21	$ 37.00	$ 777.00	CPVC
12	CPVC Sch 80 90 Ell	12	$ 2,215.00	$ 26,580.00	CPVC
3	CPVC Sch 80 45 Ell	6	$ 40.00	$ 240.00	CPVC
12	CPVC Sch 80 45 Ell	2	$ 2,202.00	$ 4,404.00	CPVC
1/4	CPVC Sch 80 Tee	1	$ 14.00	$ 14.00	CPVC
1/2	CPVC Sch 80 Tee	16	$ 6.00	$ 96.00	CPVC
3/4	CPVC Sch 80 Tee	5	$ 6.00	$ 30.00	CPVC
3/4	CPVC Sch 80 Tee ~	1	$ 6.00	$ 6.00	CPVC
1	CPVC Sch 80 Tee	26	$ 7.00	$ 182.00	CPVC
1	CPVC Sch 80 Tee ~	2	$ 7.00	$ 14.00	CPVC
1-1/2	CPVC Sch 80 Tee	15	$ 17.00	$ 255.00	CPVC
1-1/2	CPVC Sch 80 Tee ~	2	$ 17.00	$ 34.00	CPVC
2	CPVC Sch 80 Tee	17	$ 19.00	$ 323.00	CPVC
2-1/2	CPVC Sch 80 Tee	7	$ 47.00	$ 329.00	CPVC
3	CPVC Sch 80 Tee	2	$ 47.00	$ 94.00	CPVC
12	CPVC Sch 80 Tee	9	$ 2,728.00	$ 24,552.00	CPVC
12	CPVC Sch 80 Coupling	9	$ 582.00	$ 5,238.00	CPVC
24	CPVC Sch 80 Coupling	4	$ 7,403.00	$ 29,612.00	CPVC
1/4	CPVC Sch 80 Union w/Viton O-Ring	8	$ 22.00	$ 176.00	CPVC
1/2	CPVC Sch 80 Union w/Viton O-Ring	12	$ 11.00	$ 132.00	CPVC
3/4	CPVC Sch 80 Union w/Viton O-Ring	5	$ 12.00	$ 60.00	CPVC
1	CPVC Sch 80 Union w/Viton O-Ring	20	$ 14.00	$ 280.00	CPVC
1x1/2	CPVC Sch 80 Reducer Coupling	1	$ 10.00	$ 10.00	CPVC
1-1/2x3/4	CPVC Sch 80 Reducer Coupling	1	$ 21.00	$ 21.00	CPVC
1-1/2x1	CPVC Sch 80 Reducer Coupling	11	$ 21.00	$ 231.00	CPVC
2x1/2	CPVC Sch 80 Reducer Coupling	1	$ 28.00	$ 28.00	CPVC
2x1	CPVC Sch 80 Reducer Coupling	3	$ 28.00	$ 84.00	CPVC
2x1-1/2	CPVC Sch 80 Reducer Coupling	4	$ 28.00	$ 112.00	CPVC
2-1/2x1-1/2	CPVC Sch 80 Reducer Coupling	3	$ 32.00	$ 96.00	CPVC
3x1	CPVC Sch 80 Reducer Coupling ~	2	$ 79.00	$ 158.00	CPVC
3x2	CPVC Sch 80 Reducer Coupling	7	$ 64.00	$ 448.00	CPVC
14x12	CPVC Sch 80 Reducer Coupling	2	$ 1,361.00	$ 2,722.00	CPVC
24x12	CPVC Sch 80 Reducer Coupling	4	$ 8,813.00	$ 35,252.00	CPVC
3	CPVC Sch 80 Plug ~	2	$ 48.00	$ 96.00	CPVC
1x1/2	CPVC Sch 80 Reducing Tee	1	$ 15.00	$ 15.00	CPVC
2-1/2x1-1/2	CPVC Sch 80 Reducing Tee	4	$ 40.00	$ 160.00	CPVC
24x12	CPVC Sch 80 Reducing Tee	20	$ 16,840.00	$ 336,800.00	CPVC
1-1/2	CPVC Sch 80 Union w/EPDM O-Ring	2	$ 28.00	$ 56.00	CPVC
2-1/2	CPVC Sch 80 Union w/EPDM O-Ring	1	$ 102.00	$ 102.00	CPVC
2	PVC Sch 80 90 Ell	2	$ 5.00	$ 10.00	PVC
4	PVC Sch 80 90 Ell	2	$ 19.00	$ 38.00	PVC
4	PVC Sch 80 Tee	1	$ 26.00	$ 26.00	PVC
1/4x1/4	316 SS Tube x MPT Adapter	84-LF	$ 11.00	$ 924.00	SMALL BORE
1	SS A774 304 Sch 40 THD 90 SR Ell	15	$ 13.00	$ 195.00	SMALL BORE
1x1/2	SS A774 304 Sch 40 THD Bushing	30	$ 9.00	$ 270.00	SMALL BORE
3	Combination Air Relief/Vacuum Va	5	$ 8,705.00	$ 43,525.00	VALVE - ARV
3	Combination Air Relief/Vacuum Va ~w/ throttling device	1	$ 8,705.00	$ 8,705.00	VALVE - ARV
4	Combination Air Relief/Vacuum Va	1	$ 16,707.00	$ 16,707.00	VALVE - ARV

12	Flg General Purpose BFV w/Hand W	2	$ 3,269.00	$ 6,538.00	VALVE - BUTTERFLY
16	Flg General Purpose BFV w/Hand W	1	$ 4,274.00	$ 4,274.00	VALVE - BUTTERFLY
18	Flg General Purpose BFV w/Hand W	6	$ 4,274.00	$ 25,644.00	VALVE - BUTTERFLY
18	Flg General Purpose BFV w/Hand W ~BFV-507	1	$ 4,274.00	$ 4,274.00	VALVE - BUTTERFLY
18	Flg General Purpose BFV w/Hand W ~BFV-509	1	$ 4,274.00	$ 4,274.00	VALVE - BUTTERFLY
18	Flg General Purpose BFV w/Hand W ~BFV-RW-103	1	$ 4,274.00	$ 4,274.00	VALVE - BUTTERFLY
18	Flg General Purpose BFV w/Hand W ~BFV-RW-202	1	$ 4,274.00	$ 4,274.00	VALVE - BUTTERFLY
18	Flg General Purpose BFV w/Hand W ~BFV-RW-302	1	$ 4,274.00	$ 4,274.00	VALVE - BUTTERFLY
24	Flg General Purpose BFV w/Hand W ~**BFV-1	1	$ 9,188.00	$ 9,188.00	VALVE - BUTTERFLY
24	Flg General Purpose BFV w/Hand W ~**BFV-2	1	$ 9,188.00	$ 9,188.00	VALVE - BUTTERFLY
24	Flg General Purpose BFV w/Hand W ~**BFV-3	1	$ 9,188.00	$ 9,188.00	VALVE - BUTTERFLY
24	Flg General Purpose BFV w/Hand W ~BFV-508	1	$ 9,188.00	$ 9,188.00	VALVE - BUTTERFLY
24	Flg General Purpose BFV w/Hand W ~BFV-RW-011	1	$ 9,188.00	$ 9,188.00	VALVE - BUTTERFLY
12	Flg Gen Purpose BFV W/Pneum ~BFV-102	1	$ 4,983.00	$ 4,983.00	VALVE - BUTTERFLY
12	Flg Gen Purpose BFV W/Pneum ~BFV-202	1	$ 4,983.00	$ 4,983.00	VALVE - BUTTERFLY
12	Flg Gen Purpose BFV W/Pneum ~BFV-302	1	$ 4,983.00	$ 4,983.00	VALVE - BUTTERFLY
12	Flg Gen Purpose BFV W/Pneum ~BFV-402	1	$ 4,983.00	$ 4,983.00	VALVE - BUTTERFLY
2	CPVC Butterfly Valve w/Gear Op ~BFV-513, Solvent Weld, w/ Pneumatic Actuator	1	$ 1,250.00	$ 1,250.00	VALVE - CPVC BUTTERFLY
1/2	Ball Valve Thd SST	34	$ 25.00	$ 850.00	VALVE - BALL
1	Ball Valve Thd SST	79	$ 47.00	$ 3,713.00	VALVE - BALL
2	PVC True Union Solv Weld Ball	2	$ 194.00	$ 388.00	VALVE - PVC BALL
4	PVC True Union Solv Weld Ball	1	$ 954.00	$ 954.00	VALVE - PVC BALL
1	CPVC Solvent Weld Ball Valve	30	$ 163.00	$ 4,890.00	VALVE - CPVC BALL
1/2	CPVC True Union Solv Weld Ball	29	$ 106.00	$ 3,074.00	VALVE - CPVC BALL
1/2	CPVC True Union Solv Weld Ball ~BAV-738 - w/ Pneumatic Actuator	1	$ 551.00	$ 551.00	VALVE - CPVC BALL
1/2	CPVC True Union Solv Weld Ball ~BAV-739 - w/ Pneumatic Actuator	1	$ 551.00	$ 551.00	VALVE - CPVC BALL
3/4	CPVC True Union Solv Weld Ball	5	$ 108.00	$ 540.00	VALVE - CPVC BALL
1	CPVC True Union Solv Weld Ball	19	$ 163.00	$ 3,097.00	VALVE - CPVC BALL
1	CPVC True Union Solv Weld Ball ~	2	$ 163.00	$ 326.00	VALVE - CPVC BALL
1	CPVC True Union Solv Weld Ball ~BAV-736 - w/ Pneumatic Actuator	1	$ 608.00	$ 608.00	VALVE - CPVC BALL
1	CPVC True Union Solv Weld Ball ~BAV-737 - w/ Pneumatic Actuator	1	$ 608.00	$ 608.00	VALVE - CPVC BALL
1	CPVC True Union Solv Weld Ball ~BAV-739 - w/ Pneumatic Actuator	1	$ 608.00	$ 608.00	VALVE - CPVC BALL
1-1/2	CPVC True Union Solv Weld Ball	12	$ 226.00	$ 2,712.00	VALVE - CPVC BALL
1-1/2	CPVC True Union Solv Weld Ball ~	4	$ 226.00	$ 904.00	VALVE - CPVC BALL
2	CPVC True Union Solv Weld Ball	30	$ 308.00	$ 9,240.00	VALVE - CPVC BALL
2	CPVC True Union Solv Weld Ball ~w/ MOV - BAV-SD-101	1	$ 1,712.00	$ 1,712.00	VALVE - CPVC BALL
2	CPVC True Union Solv Weld Ball ~w/ MOV - BAV-SD-201	1	$ 1,712.00	$ 1,712.00	VALVE - CPVC BALL
2	CPVC True Union Solv Weld Ball ~w/ MOV - BAV-SD-301	1	$ 1,712.00	$ 1,712.00	VALVE - CPVC BALL
2-1/2	CPVC True Union Solv Weld Ball	17	$ 1,024.00	$ 17,408.00	VALVE - CPVC BALL
3	CPVC True Union Solv Weld Ball	2	$ 1,059.00	$ 2,118.00	VALVE - CPVC BALL
1/2	Sweat Ball Valve	12	$ 12.00	$ 144.00	VALVE - BALL
1	Sweat Ball Valve	14	$ 26.00	$ 364.00	VALVE - BALL
2	Sweat Ball Valve	1	$ 94.00	$ 94.00	VALVE - BALL
12	Flg Swing Check Valve	1	$ 10,967.00	$ 10,967.00	VALVE - CHECK
18	Flg Swing Check Valve ~CKS-RW-102	1	$ 22,202.00	$ 22,202.00	VALVE - CHECK
18	Flg Swing Check Valve ~CKS-RW-201	1	$ 22,202.00	$ 22,202.00	VALVE - CHECK
18	Flg Swing Check Valve ~CKS-RW-301	1	$ 22,202.00	$ 22,202.00	VALVE - CHECK
2	150# Flanged Check Valve	1	$ 2,000.00	$ 2,000.00	VALVE - CHECK
2	Sweat Check Valve	1	$ 1,217.00	$ 1,217.00	VALVE - CHECK
1/2	CPVC Solvent Weld Check Valve	8	$ 102.00	$ 816.00	VALVE - CPVC CHECK
3/4	CPVC Solvent Weld Check Valve	1	$ 122.00	$ 122.00	VALVE - CPVC CHECK
1	CPVC Solvent Weld Check Valve	3	$ 143.00	$ 429.00	VALVE - CPVC CHECK
1-1/2	CPVC Solvent Weld Check Valve	5	$ 296.00	$ 1,480.00	VALVE - CPVC CHECK
1-1/2	CPVC Solvent Weld Check Valve ~	1	$ 296.00	$ 296.00	VALVE - CPVC CHECK
3	CPVC Solvent Weld Check Valve	1	$ 926.00	$ 926.00	VALVE - CPVC CHECK
3	150# AWWA Flg Plug Valve w/Gear	6	$ 615.00	$ 3,690.00	VALVE - PLUG
4	150# AWWA Flg Plug Valve w/Gear	1	$ 1,125.00	$ 1,125.00	VALVE - PLUG
18	150# AWWA Flg Plug Valve w/Gear ~009	1	$ 10,322.00	$ 10,322.00	VALVE - PLUG
18	150# AWWA Flg Plug Valve w/Gear ~BFV-RW-010	1	$ 10,322.00	$ 10,322.00	VALVE - PLUG
3/4	150# Flanged Diaphragm Valve	1	$ 1,084.00	$ 1,084.00	VALVE -DIAPHRAGM
1/2	CPVC Solvent Weld Diaphragm Valv	1	$ 1,234.00	$ 1,234.00	CPVC - DIAPHRAGM VALVE
1/2	CPVC True Union Solv Weld Diaphr	2	$ 1,234.00	$ 2,468.00	CPVC - DIAPHRAGM VALVE
1-1/2	CPVC T/U Solv Weld Diaphragm Val ~PRV	6	$ 1,899.00	$ 11,394.00	CPVC - DIAPHRAGM VALVE
3	307B HDG Bolt 1/8" Neo Gskt Kit	18	$ 13.00	$ 234.00	BNG
10	307B HDG Bolt 1/8" Neo Gskt Kit	10	$ 76.00	$ 760.00	BNG
12	307B HDG Bolt 1/8" Neo Gskt Kit	149	$ 87.00	$ 12,963.00	BNG
14	307B HDG Bolt 1/8" Neo Gskt Kit	78	$ 129.00	$ 10,062.00	BNG
16	307B HDG Bolt 1/8" Neo Gskt Kit	25	$ 165.00	$ 4,125.00	BNG
18	307B HDG Bolt 1/8" Neo Gskt Kit	76	$ 228.00	$ 17,328.00	BNG
20	307B HDG Bolt 1/8" Neo Gskt Kit	8	$ 279.00	$ 2,232.00	BNG
24	307B HDG Bolt 1/8" Neo Gskt Kit	159	$ 379.00	$ 60,261.00	BNG
1	316 SST Bolt 1/8" Neo Gskt Kit	3	$ 7.00	$ 21.00	BNG
2	316 SST Bolt 1/8" Neo Gskt Kit	3	$ 16.00	$ 48.00	BNG
4	316 SST Bolt 1/8" Neo Gskt Kit	5	$ 33.00	$ 165.00	BNG
12	316 SST Bolt 1/8" Neo Gskt Kit	6	$ 129.00	$ 774.00	BNG
18	316 SST Bolt 1/8" Neo Gskt Kit	3	$ 411.00	$ 1,233.00	BNG
24	316 SST Bolt 1/8" Neo Gskt Kit	6	$ 698.00	$ 4,188.00	BNG
12	316 SST Bolt & Isolation Kit	1	$ 281.00	$ 281.00	BNG
24	316 SST Bolt & Isolation Kit	4	$ 1,229.00	$ 4,916.00	BNG
14	307B CS Bolt & Isolation Kit	4	$ 270.00	$ 1,080.00	BNG
1	150# Sch 80 CPVC SW Flange	3	$ 12.00	$ 36.00	CPVC
4	150# Sch 80 CPVC SW Flange	2	$ 56.00	$ 112.00	CPVC
1/2	150# Sch 80 CPVC VS PR Flange	6	$ 11.00	$ 66.00	CPVC
1	150# Sch 80 CPVC VS PR Flange	2	$ 12.00	$ 24.00	CPVC
1	150# Sch 80 CPVC VS PR Flange ~	2	$ 12.00	$ 24.00	CPVC
1-1/2	150# Sch 80 CPVC VS PR Flange	6	$ 16.00	$ 96.00	CPVC
2	150# Sch 80 CPVC VS PR Flange	6	$ 20.00	$ 120.00	CPVC
2-1/2	150# Sch 80 CPVC VS PR Flange	6	$ 40.00	$ 240.00	CPVC
3	150# Sch 80 CPVC VS PR Flange	3	$ 42.00	$ 126.00	CPVC
12	150# Sch 80 CPVC VS PR Flange	36	$ 2,001.00	$ 72,036.00	CPVC
24	150# Sch 80 CPVC VS PR Flange	8	$ 11,975.00	$ 95,800.00	CPVC
2	150# Sch 80 PVC Solv Weld Flange	2	$ 20.00	$ 40.00	PVC
24	Ductile Iron C110 Blind Flange	4	$ 5,426.00	$ 21,704.00	DUCTILE
8	304 SS 150# Slip-On Flange	6	$ 370.00	$ 2,220.00	SST
12	304 SS 150# Slip-On Flange	10	$ 1,022.00	$ 10,220.00	SST
2	125# Cast Copper Flange	1	$ 125.00	$ 125.00	COPPER

1/2	PTFE Fractional Gasket	4	$ 5.00	$ 20.00	BNG
1	Standard PTFE Gasket	4	$ 7.00	$ 28.00	BNG
1	Standard PTFE Gasket ~	2	$ 7.00	$ 14.00	BNG
1-1/2	Standard PTFE Gasket	2	$ 10.00	$ 20.00	BNG
1-1/2	Standard PTFE Gasket ~	4	$ 10.00	$ 40.00	BNG
2	Standard PTFE Gasket	4	$ 15.00	$ 60.00	BNG
2-1/2	Standard PTFE Gasket	6	$ 20.00	$ 120.00	BNG
12	SST Pipe Saddle Roller Support ~See detail 202 sheet M-7.02	6	$ 4,000.00	$ 24,000.00	SUPPORT
18	SST Strap for Concrete Saddle	20	$ 622.00	$ 12,440.00	SUPPORT
24	SST Strap for Concrete Saddle	7	$ 650.00	$ 4,550.00	SUPPORT
18	P620 - Galv 90/Tee Pipe Supt Bol ~Refer to Detail 505, Sheet M-7.05, and M-1.04 keyed note 17	9	$ 1,000.00	$ 9,000.00	SUPPORT
24	P620 - Galv 90/Tee Pipe Supt Bol	2	$ 1,000.00	$ 2,000.00	SUPPORT
24	P620 - Galv 90/Tee Pipe Supt Bol ~Refer to detail 303 sheet M-7.03, and M-1.05 keyed note 17	1	$ 1,000.00	$ 1,000.00	SUPPORT
12	P697 - SST Air Pipe Sliding Supt ~Refer to sheet M-7.02, detail 202	16	$ 4,000.00	$ 64,000.00	SUPPORT
18	P602 - Galv Concrete Pipe Supt	2	$ 315.00	$ 630.00	SUPPORT
24	P602 - Galv Concrete Pipe Supt	3	$ 412.00	$ 1,236.00	SUPPORT
24	P602 - SST Concrete Pipe Supt	1	$ 650.00	$ 650.00	SUPPORT
12	P658 - Galv Wall Bracket	16	$ 1,143.00	$ 18,288.00	SUPPORT
12	P658 - Galv Wall Bracket ~Refer to sheet M-7.05,detail 504	6	$ 1,143.00	$ 6,858.00	SUPPORT
14	P658 - SST Wall Bracket ~Refer to sheet M-7.05, detail 504	16	$ 1,786.00	$ 28,576.00	SUPPORT
18	P624 - 2' Galv Adj Pipe Support	3	$ 929.00	$ 2,787.00	SUPPORT
24	P624 - 2' Galv Adj Pipe Support	2	$ 973.00	$ 1,946.00	SUPPORT
24	P624 - 4' Galv Adj Pipe Support	9	$ 973.00	$ 8,757.00	SUPPORT
12	P630 - Galv Pipe Hanger @ Metal	4	$ 343.00	$ 1,372.00	SUPPORT
14	P630 - Galv Pipe Hanger @ Metal	4	$ 400.00	$ 1,600.00	SUPPORT
16	P630 - Galv Pipe Hanger @ Metal	2	$ 458.00	$ 916.00	SUPPORT
12	D-205 '4' SST Adjustable Pipe Su	2	$ 493.00	$ 986.00	SUPPORT
14	D-205 '2' Galv Adjustable Pipe S	4	$ 648.00	$ 2,592.00	SUPPORT
12	D-204 'SST Pipe Hanger	13	$ 858.00	$ 11,154.00	SUPPORT
24	#260 Galv Clevis Hanger	9	$ 1,286.00	$ 11,574.00	SUPPORT
2	Wrot Copper Coupling	1	$ 15.00	$ 15.00	COPPER
1/4	CPVC Sch 80 Coupling	20	$ 9.00	$ 180.00	CPVC
1/2	CPVC Sch 80 Coupling	5	$ 3.00	$ 15.00	CPVC
3/4	CPVC Sch 80 Coupling	6	$ 4.00	$ 24.00	CPVC
1	CPVC Sch 80 Coupling	18	$ 5.00	$ 90.00	CPVC
1-1/2	CPVC Sch 40 Coupling	15	$ 9.00	$ 135.00	CPVC
12	CPVC Sch 80 Coupling	3	$ 582.00	$ 1,746.00	CPVC
3	Victaulic Style 775 PVC Coupling	1	$ 322.00	$ 322.00	PVC
12	Proprietary Restraint Joint	31	$ 199.00	$ 6,169.00	DUCTILE
14	Proprietary Restraint Joint	7	$ 261.00	$ 1,827.00	DUCTILE
16	Proprietary Restraint Joint	12	$ 356.00	$ 4,272.00	DUCTILE
24	Proprietary Restraint Joint	6	$ 734.00	$ 4,404.00	DUCTILE
1/2	Stainless Steel Quick Disconnect	4	$ 59.00	$ 236.00	SMALL BORE
14	Flex Coupling Rest (PE x PE)	4	$ 2,688.00	$ 10,752.00	COUPLING
18	Flex Coupling Rest (PE x PE)	10	$ 3,123.00	$ 31,230.00	COUPLING
24	Flex Coupling Rest (PE x PE)	7	$ 3,745.00	$ 26,215.00	COUPLING
1/2x1-1/2	304 SS Sch 40 Nipple TxT	30	$ 4.00	$ 120.00	SMALL BORE
1/2x2	304 SS Sch 40 Nipple TxT	22	$ 5.00	$ 110.00	SMALL BORE
1x2	304 SS Sch 40 Nipple TxT	30	$ 8.00	$ 240.00	SMALL BORE
1x3	304 SS Sch 40 Nipple TxT	15	$ 10.00	$ 150.00	SMALL BORE
10	FxF SST/Rubber Exp Joint Restrai	2	$ 5,165.00	$ 10,330.00	EXPANSION
12	FxF SST/Rubber Exp Joint Restrai	5	$ 5,679.00	$ 28,395.00	EXPANSION
12	FxF SST/Rubber Exp Joint Restrai ~Refer to sheet M-7.03, detail 301, 304 SST	5	$ 5,679.00	$ 28,395.00	EXPANSION
1	Link Seal ~1ft Length	3	$ 31.00	$ 93.00	PENETRATIONS
1-1/2	Link Seal ~1ft Long	1	$ 31.00	$ 31.00	PENETRATIONS
12	Link Seal	44	$ 333.00	$ 14,652.00	PENETRATIONS
14	Link Seal	4	$ 500.00	$ 2,000.00	PENETRATIONS
18	Link Seal ~1.5ft Length	3	$ 638.00	$ 1,914.00	PENETRATIONS
28	Link Seal ~1ft length	8	$ 692.00	$ 5,536.00	PENETRATIONS
1	Steel Pipe Wall Sleeve ~1ft SS Sleeve	3	$ 186.00	$ 558.00	PENETRATIONS
2	Steel Pipe Wall Sleeve ~1ft long SS Sleeve	1	$ 193.00	$ 193.00	PENETRATIONS
12	Steel Pipe Wall Sleeve ~1ft length, w/ annular ring - Refer to sheet M-7.01 detail 104	20	$ 879.00	$ 17,580.00	PENETRATIONS
14	Steel Pipe Wall Sleeve ~refer to sheet M-7.01 detail 102, 1ft length	1	$ 1,022.00	$ 1,022.00	PENETRATIONS
16	Steel Pipe Wall Sleeve ~1.5 ft length, w/ annular ring - Refer to sheet M-7.01 detail 104	1	$ 1,315.00	$ 1,315.00	PENETRATIONS
20	Steel Pipe Wall Sleeve ~1.5 ft SS Sleeve	3	$ 1,686.00	$ 5,058.00	PENETRATIONS
30	Steel Pipe Wall Sleeve ~1ft length, w/ annular ring - Refer to sheet M-7.01 detail 104	2	$ 2,193.00	$ 4,386.00	PENETRATIONS
1	Steel Pipe Floor Sleeve	1	$ 229.00	$ 229.00	PENETRATIONS
14	Steel Pipe Floor Sleeve ~14 inches long, Refer to Sheet M-7.01, detail 102	1	$ 1,093.00	$ 1,093.00	PENETRATIONS
16	Steel Pipe Floor Sleeve ~14 inches long, Refer to Sheet M-7.01, detail 102	1	$ 1,472.00	$ 1,472.00	PENETRATIONS
1/4	CIQC Chemical Injection Quill Co ~Refer to detail 605 sheet M-7.06	2	$ 929.00	$ 1,858.00	CHEMICAL INJECTION
1/2	CIQC Chemical Injection Quill Co	2	$ 929.00	$ 1,858.00	CHEMICAL INJECTION
1	CIQC Chemical Injection Quill Co	3	$ 1,286.00	$ 3,858.00	CHEMICAL INJECTION
2	SG 11' PVC Clear Tank Level Guag	1	$ 358.00	$ 358.00	PVC
			$ 671,721.00	**$ 2,983,782.50**	

***THIS QUOTATION IS VALID FOR ACCEPTANCE WITHIN 30 DAYS OF THE DATE OF QUOTATION**
***IF SIGNED PURCHASE ORDER AGREEMENT IS ACCEPTABLE TO BOTH PARTIES WITHIN 30 DAYS OF QUOTATION,**
PRICES WILL BE HELD FIRM FOR 6 MONTHS FROM THE DATE OF THIS BID FOR ALL DELIVERIES TO THE JOBSITE
***ALL MATERIAL MUST BE RELEASED AT ONE TIME**
*** ANY ADDITIONAL MATERIAL OUTSIDE OF CONTRACT WILL BE PRICED AT CURRENT MARKET VALUE**
***PAYMENT TERMS NET 30**

***SURCHARGE ESTIMATES ARE PRESENTED FOR INFORMATION ONLY AND TO ASSIST IN ESTIMATING THE POTENTIAL IMPACT**
IT IS THE RESPONSIBILITY OF THE CONTRACTOR TO COVER ANY AND ALL POTENTIAL SURCHARGE COSTS
1 EA - SCRAP & FUEL SURCHARGE ESTIMATE - APRIL 2022 $150/TON ESTIMATE - $10,200.00

March 25, 2022

Mr. Austin Hancock
McCarthy Building Companies
6225 N 24h St, 200
Phoenix, AZ 85016

Subject: McCarthy – Chandler Reclaimed Water Interconnecting Pipe Fabrication
AZCO INC. Proposal No. 220114

Dear Mr. Hancock:

AZCO INC. is pleased to offer our proposal to supply labor and materials to fabricate and deliver stainless steel pipe for blower building, Yard/Underground and Membrane Facility F.O.B. Appleton, Wisconsin, full freight allowed to Chandler, AZ.

Our firm price to perform this work is One Hundred Fifty-One Thousand One Hundred Ninety-Two Dollars ($151,192.00). This price does not include the cost of bid, payment and performance bond.

- Option # 1 – Changing all piping within Option 1 bounds of Membrane Facility to Stainless steel. **Add: $923,290.00**
- Option #2 – Change all Piping in contact with Cleaning Chemicals to Stainless Steel. **Add: $493,018.00**

Force Majeure - COVID-19 Relief. AZCO's acceptance of an award of Work in response to this Proposal is contingent upon the insertion of a Force Majeure provision into any definitive agreement entered into between AZCO and its client which clause shall provide as follows: "AZCO shall be entitled to a period of relief in performance and appropriate cost relief as well as the stay or complete elimination of liquidated damages or other damage, cost or expense for delay imposed by this Agreement, if any, where circumstances arise that are beyond AZCO's control due to a Force Majeure Event. A "Force Majeure Event," is any event or circumstance, or combination of events or circumstances, that is beyond the reasonable control of AZCO and is unavoidable or could not be prevented or overcome by AZCO's reasonable efforts and due diligence. Force Majeure Events include but shall not be limited to, change in law, natural disasters, fire, hurricanes, unusually severe and not reasonably anticipated site conditions, inclement weather, tornadoes, extreme winds, mudslides, lightning, flood, earthquake, acts of God, terrorism, acts of a public enemy, strikes or lockouts or other labor disturbances, public disorder or civil disturbances, blockades, insurrections, riots, war (whether or not declared), sabotage, embargo, expropriation or confiscation, pandemic, epidemic or quarantine and laws, rules, regulations, orders and restrictions enacted pursuant thereto. The payment of money owed by a Party will not be excused because of a Force Majeure Event. Further, whether the possibility of which is known or unknown prior to execution of this Agreement; 1) any cost, damage, expense; 2) any disruption to the labor force or supply chain delay; 3) any prevention or delay in performance as anticipated; and 4) AZCO being subject to any law, rule, regulation, order, restriction or mandate; all to the extent caused by or related to the global outbreak and spread of COVID-19 ("Coronavirus") or vaccinations against Coronavirus; shall be included in the definition of a Force Majeure Event. To the extent applicable, the doctrines of "commercial impracticability" or "frustration of purpose" under the Uniform Commercial Code ("UCC") shall also excuse performance if delivery or performance pursuant to this Agreement's terms has been made "impracticable" by the occurrence of a contingency, the non-occurrence of which both parties assumed when this Agreement was made. At this time, it remains impossible to foresee or to predict the

full impact of COVID-19 around the world and, therefore, AZCO has not included a contingency specifically for COVID-19.

When responding to this proposal, please refer to our Proposal No. 220114. This number should be included in all purchase orders resulting from this proposal.

Attachments

1. AZCO Fabrication Supplemental Units – Valid Through May 31, 2022
2. AZCO Sample COI 2022
3. AZCO W-9 2022
4. Safety Performance History 2022
5. 220114 - McCarthy - Bid Form
6. 220114 McCarthy 4817 Chandler RWIF GMP 2 – Front Ends Final AZCO 03.14.2022
7. Bid Basis for Material

Clarifications

1. Proposal based on award/PO by to be determined.

2. Lead times from our material vendors are stock to 10-11 weeks, based on receipt date of purchase order for BASE SCOPE. This is not the lead time for delivery of fabricated components to site. Option 1 material is 27-28 weeks.

3. Lead time for delivery of fabricated components to site is 13-14 weeks after award of PO for Base scope. Option 1 will be 32-36 weeks after award of PO.

4. Delivery schedule will be based upon receipt date of purchase order and is yet to be determined. Prior to an award/PO, a mutually agreeable deliverables schedule with defined priorities and issued for construction drawings issue dates need to be established.

5. Proposal is based on the drawing and transmittal received.

6. Any price increase directly or indirectly caused by changes in law, taxes, tariffs or the market which becomes effective or is imposed on AZCO after the date of this proposal is not included in AZCO's pricing and shall give rise to an equitable adjustment of the contract price and time for performance. Such equitable adjustment shall account for all costs and delays that AZCO incurs arising out of or relating to such change including but not limited to costs and delays relating to escalation, re-procurement, change in suppliers and any increased cost of supplied materials, products, manufactured equipment or goods.

7. Our proposal is based on 19 spools for base scope and 106 spools for Option 1 scope.

8. Estimate weight is 42,138.93 pounds and freight is based on 2 loads for both base scope and options.

9. Base Scope material to be pickled/passivated by acid bath after fabrication. Option 1 scope will have only the welds passivated with pickled paste due to angle face rings with ductile backing flanges being unable to go in acid bath.

10. Slip on flanges for base scope are provided at valves, flow meters and termination points. Not all joints will receive flanges. Spools are made to the fullest extent possible.

11. Angle Face Rings with Ductile Backing Flanges are provided for option scopes.

12. Delivery is subject to federal and state laws and regulations, fires, strikes, disputes with workmen, floods, accidents, embargoes, delays in transportation, shortage of cars, shortage of material, shortage of labor and to any other causes beyond Seller's reasonable control. Seller will accept no penalties for late deliveries for any reason whatsoever. For Customer furnished material, the parties shall mutually agree on a fabrication and material delivery schedule at the time of award. Deviations from an accepted schedule shall be the basis for an equitable schedule and price adjustment.

13. Orders are subject to cancellation only with Seller's consent and upon agreement by the Customer to make payment for all costs incurred by Seller prior to Seller's receipt of Customer's notification of intent to cancel. Such costs include, in addition to actual expenses, a reasonable allowance for overhead and profit.

14. Seller warrants only that the materials will be as specified by the Customer or as modified by subsequent agreement and will be free from defects of workmanship and materials supplied by Seller for a period of 18 months from the date of shipment, or 12 months from the date of installation, whichever expires sooner. The only warranty made by Seller concerning radiography, hardness or any other type of nondestructive examination or functional test of materials and workmanship produced by Seller's shop is a guarantee that shop examined fabrication is of the quality level expressly specified for the project prior to fabrication. The above warranties shall be in lieu of and exclude all other express or implied warranties of merchantability, fitness for purpose, or otherwise. Customer's remedies shall be limited to replacement of nonconforming materials or credit therefor upon return. Seller will not be subject to any other or further liability and all claims for labor or for consequential damages are excluded. Seller will not accept back charges involving examination of fabrication which was not required to be examined to the same quality level prior to shipment from Seller's plant.

15. Seller shall be notified promptly of any material claimed to be nonconforming and such material shall be held subject to Seller's inspection. No back charge for field correction of fabricated piping will be honored unless agreed upon prior to field correction. In no case will Seller's allowance exceed Seller's charge to Customer for the unit of material or labor involved unless agreed upon, in writing, prior to receipt of purchase order.

16. Seller reserves the right to invoice Customer for any or all finished material ready for shipment when held at Customer's request or because of other reasons beyond Seller's control.

17. Customer accepts responsibility for prompt review, approval and return of submittals and seller reserves the right to monetary compensation or schedule extension for any delay incurred.

Inclusions

18. Piping fabrication tolerances will be in accordance with PFI standard ES-3.

19. Fabrication in accordance with B31.1 code.

20. 100% visual and dimensional inspection.

21. Customer holds and witness points will be agreed upon with adequate notification.

22. Plastic end protectors.

23. Welding processes GTAW/FCAW & SAW for stainless steel.

24. Materials of foreign or domestic origin.

25. Spool drawings.

26. Spool configuration will compliment normal shipping limitations (8' x 8' x 40').

27. Bid breakdown is for accounting purposes only, not for firm price adds or deducts. It is a guide for bid comparison with other bidders, not for accepting partial award.

28. Freight is included within each cost.

Exclusions

29. Field verification of dimensions. McCarthy to provide AZCO a detail model with dimensions or flange to flange lengths per spool.

30. The supply of and labor for bolt, nut and gasket sets, blind flanges, valves, instruments, flex connectors, specialties, supports and support attachments.

31. The supply of and labor for thread pipe assemblies.

32. Design and Engineering.

33. Fabrication in accordance with B31.3, B31.8 and B31.9.

34. Fabrication in accordance with ASME B31.1 BEP and section 1 piping codes. Authorized inspection is excluded.

35. Radiography and post weld heat treating as required by specified code.

36. Hardness testing, dye penetrant testing, magnetic particle testing, ultrasonic testing and PMI.

37. Sandblast, prime and finish paint.

38. All internal linings are excluded.

39. Taxes, permits and fees.

40. Liquidated damages.

41. Isometric drawings.

42. Hydrostatic pressure testing and pneumatic pressure testing.

43. Allowances for delays beyond our control (late and out of sequence customer supplied deliveries, engineering or other such circumstances).

44. On all AZCO INC. supplied materials, "Country of Origin" hereby designates where the final finished form of the item in question was forged, cast, wrought, etc.; not where the raw material was extracted from the earth or where it was made into plate, sheet, strip, coil, billet, etc. "Country of Origin" information given is good only at the time of the original quotation. There is no guarantee, either expressed or implied, that the sources for all of the quoted material will not change between the time of the original bid and the time that a purchase order is issued to AZCO INC.

45. ASTM/ASME does not require "Country of Origin" of raw materials to be reported on the manufacturer test reports (MTR).

46. Taxes, customer shall be responsible for the payment of all sales and use taxes, penalties and/or interest now or hereafter imposed by any governmental authority on the work identified in the award document. Customer shall indemnify and hold AZCO INC. harmless from any and all claims asserted by the governmental authority or third parties to recover sales or use taxes not paid by AZCO INC. at the direction of the customer. Customer agrees to bear all Sales, Use, Privilege, Personal Property Tax and tax of every other character by whatever name designated that now is or hereafter may be imposed in any manner by Federal, State and Local Authorities on this transaction, or on the product covered hereby, or on the manufacture, shipment, sale, lease, possession, ownership, or use of the products; and the Customer agrees to pay the same either to the Seller or the public authorities, as may be required.

Commercial Terms Clarifications

47. AZCO INC. proposes to perform the scope of work identified herein based upon the understanding that all work will be performed in accordance with the terms and conditions set forth in the McCarthy Purchase Order and its associated Exhibits which have been marked to reflect AZCO INC.'s required clarifications (the "Terms"). To the extent that any document, term or condition which McCarthy wishes to impose on AZCO differs from the Terms, such document, term or condition is respectfully rejected. Please note that the Additional Subcontractor Conditions, the Subcontract Form, the Agreement Between McCarthy and Consultant and their respective Exhibits and Attachments have, for the purposes of AZCO's Proposal, have been disregarded as inapplicable to the Fabrication scope of work being proposed herein by AZCO and to the extent the representations set forth in the Bid Proposal Form submitted with this Proposal relate to such disregarded documents, such representations shall be inapplicable as well.

Thank you for the opportunity to provide this quotation. If you have any questions concerning this proposal, please feel free to contact Mr. Ethan Budimlija at (920) 734-5791.

Very truly yours,

AZCO INC.

Allen King

Allen King
Vice President of Project Development

AZCO INC.

Ethan Budimlija

Ethan Budimlija
Estimator

: kmm

c: Earle A. Cianchette, President

Company: **McCarthy Building Companies**
Jobname: **Chandler RWIF GMP**
Pricing Due: **3/25/22 5:00 P.M.**
DO NOT INSERT OR DELETE ROWS
IF NEW ROWS ARE NEEDED, USE ROWS AT END OF LIST

Total
Subtotal

Size	Description	Count	Bid Price	Total Bid Price	Filter	Notes
10x2' 0"	DI FxF Epoxy Lined/Primer Coat	1	$728.46	$ 728.46	DUCTILE	
12x2' 0"	DI FxF Epoxy Lined/Primer Coat	8	$940.12	$ 7,520.96	DUCTILE	
12x2' 6"	DI FxF Epoxy Lined/Primer Coat	3	$1,037.40	$ 3,112.20	DUCTILE	
12x2' 6"	DI FxF Epoxy Lined/Primer Coat ~FLxPE pipe spool	2	$751.64	$ 1,503.28	DUCTILE	
12x3' 0"	DI FxF Epoxy Lined/Primer Coat	20	$1,134.68	$ 22,693.60	DUCTILE	
12x3' 0"	DI FxF Epoxy Lined/Primer Coat ~FLxPE pipe spool	2	$848.92	$ 1,697.84	DUCTILE	
12x4' 0"	DI FxF Epoxy Lined/Primer Coat ~FLxPE spool w/ weep ring	4	$1,251.48	$ 5,005.92	DUCTILE	
12x4' 0"	DI FxF Epoxy Lined/Primer Coat ~FLxPE w/ weep ring	3	$1,251.48	$ 3,754.44	DUCTILE	
12x4' 6"	DI FxF Epoxy Lined/Primer Coat ~FLxPE pipe spool	2	$1,140.76	$ 2,281.52	DUCTILE	
12x5' 6"	DI FxF Epoxy Lined/Primer Coat	2	$1,621.08	$ 3,242.16	DUCTILE	
12x6' 0"	DI FxF Epoxy Lined/Primer Coat	1	$1,718.36	$ 1,718.36	DUCTILE	
12x6' 6"	DI FxF Epoxy Lined/Primer Coat	2	$1,815.64	$ 3,631.28	DUCTILE	
12x8' 0"	DI FxF Epoxy Lined/Primer Coat ~FLxPE spool w/ weep ring	1	$2,029.72	$ 2,029.72	DUCTILE	
14x1' 0"	DI FxF Epoxy Lined/Primer Coat ~PExFL pipe spool	1	$674.88	$ 674.88	DUCTILE	
14x1' 6"	DI FxF Epoxy Lined/Primer Coat	9	$1,207.64	$ 10,868.76	DUCTILE	
14x1' 6"	DI FxF Epoxy Lined/Primer Coat ~PExFL pipe spool	7	$800.66	$ 5,604.62	DUCTILE	
14x2' 0"	DI FxF Epoxy Lined/Primer Coat	6	$1,333.42	$ 8,000.52	DUCTILE	
14x2' 0"	DI FxF Epoxy Lined/Primer Coat ~FLxPE spool w/ weep ring	2	$1,180.44	$ 2,360.88	DUCTILE	
14x2' 0"	DI FxF Epoxy Lined/Primer Coat ~w/ 2" TOL for pressure guage	4	$1,604.12	$ 6,416.48	DUCTILE	
14x2' 6"	DI FxF Epoxy Lined/Primer Coat	1	$1,459.20	$ 1,459.20	DUCTILE	
14x4' 0"	DI FxF Epoxy Lined/Primer Coat	9	$1,836.54	$ 16,528.86	DUCTILE	
16x1' 6"	DI FxF Epoxy Lined/Primer Coat	1	$1,414.74	$ 1,414.74	DUCTILE	
16x2' 0"	DI FxF Epoxy Lined/Primer Coat	2	$1,557.62	$ 3,115.24	DUCTILE	
16x4' 0"	DI FxF Epoxy Lined/Primer Coat	1	$2,129.14	$ 2,129.14	DUCTILE	
16x4' 0"	DI FxF Epoxy Lined/Primer Coat ~FLxPE w/ weep ring	2	$1,940.40	$ 3,880.80	DUCTILE	
16x8' 6"	DI FxF Epoxy Lined/Primer Coat	1	$3,415.06	$ 3,415.06	DUCTILE	
18x3' 6"	DI FxF Epoxy Lined/Primer Coat	5	$2,337.00	$ 11,685.00	DUCTILE	
18x3' 6"	DI FxF Epoxy Lined/Primer Coat ~w/ 2" TOL for pressure guage & 3" tap for air/vacuum valve	3	$3,997.00	$ 11,991.00	DUCTILE	
18x4' 0"	DI FxF Epoxy Lined/Primer Coat	2	$2,504.20	$ 5,008.40	DUCTILE	
18x6' 6"	DI FxF Epoxy Lined/Primer Coat	5	$3,340.20	$ 16,701.00	DUCTILE	
18x7' 0"	DI FxF Epoxy Lined/Primer Coat	2	$3,507.40	$ 7,014.80	DUCTILE	
18x10' 6"	DI FxF Epoxy Lined/Primer Coat	1	$4,677.80	$ 4,677.80	DUCTILE	
18x12' 6"	DI FxF Epoxy Lined/Primer Coat	3	$5,346.60	$ 16,039.80	DUCTILE	
20x1' 6"	DI FxF Epoxy Lined/Primer Coat ~FLxPE spool w/ weep ring	4	$1,649.64	$ 6,598.56	DUCTILE	
24x1' 0"	DI FxF Epoxy Lined/Primer Coat ~PExPE	1	$551.00	$ 551.00	DUCTILE	
24x1' 6"	DI FxF Epoxy Lined/Primer Coat	4	$2,433.14	$ 9,732.56	DUCTILE	
24x1' 6"	DI FxF Epoxy Lined/Primer Coat ~FLxPE	5	$1,581.56	$ 7,907.80	DUCTILE	
24x1' 6"	DI FxF Epoxy Lined/Primer Coat ~FLxPE Spool	8	$1,581.56	$ 12,652.48	DUCTILE	
24x1' 6"	DI FxF Epoxy Lined/Primer Coat ~w/ 4" tap for air/vacuum valve	1	$3,759.14	$ 3,759.14	DUCTILE	
24x2' 0"	DI FxF Epoxy Lined/Primer Coat	3	$2,666.84	$ 8,000.52	DUCTILE	
24x2' 0"	DI FxF Epoxy Lined/Primer Coat ~FLxPE	1	$1,815.26	$ 1,815.26	DUCTILE	
24x2' 0"	DI FxF Epoxy Lined/Primer Coat ~w/ 4" tap for air/vacuum valve	1	$3,992.84	$ 3,992.84	DUCTILE	
24x2' 6"	DI FxF Epoxy Lined/Primer Coat	2	$2,900.54	$ 5,801.08	DUCTILE	
24x3' 0"	DI FxF Epoxy Lined/Primer Coat	19	$3,134.24	$ 59,550.56	DUCTILE	
24x3' 6"	DI FxF Epoxy Lined/Primer Coat	6	$3,367.94	$ 20,207.64	DUCTILE	
24x3' 6"	DI FxF Epoxy Lined/Primer Coat ~PExPE	1	$1,719.50	$ 1,719.50	DUCTILE	
24x3' 6"	DI FxF Epoxy Lined/Primer Coat ~w/ 4" tap for air/vacuum valve	1	$4,693.94	$ 4,693.94	DUCTILE	
24x4' 0"	DI FxF Epoxy Lined/Primer Coat	5	$3,601.64	$ 18,008.20	DUCTILE	
24x5' 0"	DI FxF Epoxy Lined/Primer Coat	1	$4,069.04	$ 4,069.04	DUCTILE	
24x5' 6"	DI FxF Epoxy Lined/Primer Coat	1	$4,302.74	$ 4,302.74	DUCTILE	
24x5' 6"	DI FxF Epoxy Lined/Primer Coat ~PExPE	1	$2,654.30	$ 2,654.30	DUCTILE	
24x6' 0"	DI FxF Epoxy Lined/Primer Coat	1	$4,536.44	$ 4,536.44	DUCTILE	
24x6' 6"	DI FxF Epoxy Lined/Primer Coat	2	$4,770.14	$ 9,540.28	DUCTILE	
24x7' 0"	DI FxF Epoxy Lined/Primer Coat	1	$5,003.84	$ 5,003.84	DUCTILE	
24x13' 6"	DI FxF Epoxy Lined/Primer Coat ~FLxPE	1	$7,190.36	$ 7,190.36	DUCTILE	
24x15' 0"	DI FxF Epoxy Lined/Primer Coat	1	$8,743.04	$ 8,743.04	DUCTILE	
24x17' 6"	DI FxF Epoxy Lined/Primer Coat ~PExPE	1	$8,263.10	$ 8,263.10	DUCTILE	
12	Ductile Iron Pipe Push On CL350	29-LF	$97.64	$ 2,831.60	DUCTILE	HELP/ASSUMED EPOXY, RESTRAINED?
14	Ductile Iron Pipe Push On CL350	18-LF	$135.11	$ 2,431.90	DUCTILE	HELP/ASSUMED EPOXY, RESTRAINED?
16	Ductile Iron Pipe Push On CL350	30-LF	$150.47	$ 4,514.19	DUCTILE	HELP/ASSUMED EPOXY, RESTRAINED?
12	FxF Epoxy/Primer 90 Ell	8	$1,328.94	$ 10,631.52	DUCTILE	
14	FxF Epoxy/Primer 90 Ell	9	$1,662.44	$ 14,961.96	DUCTILE	
16	FxF Epoxy/Primer 90 Ell	4	$2,040.10	$ 8,160.40	DUCTILE	
18	FxF Epoxy/Primer 90 Ell	9	$2,658.80	$ 23,929.20	DUCTILE	
24	FxF Epoxy/Primer 90 Ell	18	$4,983.18	$ 89,697.24	DUCTILE	
12	FxF Epoxy/Primer 45 Ell	1	$1,180.36	$ 1,180.36	DUCTILE	
12	FxF Epoxy/Primer Tee	11	$1,888.76	$ 20,776.36	DUCTILE	
14	FxF Epoxy/Primer Tee	3	$2,622.00	$ 7,866.00	DUCTILE	
24	FxF Epoxy/Primer Tee	35	$6,918.86	$ 242,160.10	DUCTILE	
12x10	FxF Epoxy/Primer Conc Red	2	$1,148.16	$ 2,296.32	DUCTILE	
12x10	FxF Epoxy/Primer Conc Red ~w/ 2" TOL for pressure guage	4	$1,812.16	$ 7,248.64	DUCTILE	
14x10	FxF Epoxy/Primer Conc Red ~w/ 2" TOL for pressure guage	3	$2,074.82	$ 6,224.46	DUCTILE	
14x12	FxF Epoxy/Primer Conc Red	7	$1,353.78	$ 9,476.46	DUCTILE	
16x12	FxF Epoxy/Primer Conc Red ~w/ 2" TOL for pressure guage	1	$2,341.62	$ 2,341.62	DUCTILE	
18x12	FxF Epoxy/Primer Conc Red	3	$1,932.00	$ 5,796.00	DUCTILE	
18x16	FxF Epoxy/Primer Conc Red	6	$2,140.84	$ 12,845.04	DUCTILE	
24x12	FxF Epoxy/Primer Conc Red	4	$3,629.40	$ 14,517.60	DUCTILE	
24x18	FxF Epoxy/Primer Conc Red	4	$3,848.36	$ 15,393.44	DUCTILE	
24x20	FxF Epoxy/Primer Conc Red	4	$4,070.54	$ 16,282.16	DUCTILE	
14	FxF Epoxy/Primer 22-1/2 Ell	8	$1,575.04	$ 12,600.32	DUCTILE	
16	FxF Epoxy/Primer 22-1/2 Ell	1	$1,753.06	$ 1,753.06	DUCTILE	
14x12	FxF Epoxy/Primer Red Tee	7	$2,573.70	$ 18,015.90	DUCTILE	
16x12	FxF Epoxy/Primer Red Tee	1	$2,596.70	$ 2,596.70	DUCTILE	
24x12	FxF Epoxy/Primer Red Tee	5	$4,891.18	$ 24,455.90	DUCTILE	
24x16	FxF Epoxy/Primer Red Tee	2	$4,993.30	$ 9,986.60	DUCTILE	
24x18	FxF Epoxy/Primer Red Tee	3	$7,567.46	$ 22,702.38	DUCTILE	
24	MixMJ Epoxy/Asphalt 45 Ell	2	$2,463.30	$ 4,926.60	DUCTILE	
12	MixMJ Epoxy/Asphalt 90 Ell	3	$860.66	$ 2,581.98	DUCTILE	
16	MixMJ Epoxy/Asphalt 90 Ell	4	$1,521.68	$ 6,086.72	DUCTILE	
24	MixMJ Epoxy/Asphalt 90 Ell	1	$3,320.74	$ 3,320.74	DUCTILE	
12	MixMJ Epoxy/Asphalt Tee	3	$1,049.72	$ 3,149.16	DUCTILE	
14	MixMJ Epoxy/Asphalt Tee	2	$1,558.48	$ 3,116.96	DUCTILE	
24	Ductile Iron C110 Blind Flange	4	$4,210.38	$ 16,841.52	DUCTILE	
12	Proprietary Restraint Joint	31	$163.66	$ 5,073.46	DUCTILE	HELP/ASSUMED RESTRAINT GLANDS FOR MJ FITTINGS
14	Proprietary Restraint Joint	7	$214.94	$ 1,504.58	DUCTILE	
16	Proprietary Restraint Joint	12	$293.58	$ 3,522.96	DUCTILE	
24	Proprietary Restraint Joint	6	$604.63	$ 3,627.78	DUCTILE	
14	Flex Coupling Rest (PE x PE)	4	$997.14	$ 3,988.57	COUPLING	HELP/ASSUMED FLEX COUPLING W/3-HOLE LUGS AND RODS (36" LONG RODS)
18	Flex Coupling Rest (PE x PE)	10	$1,157.14	$ 11,571.43	COUPLING	HELP/ASSUMED FLEX COUPLING W/3-HOLE LUGS AND RODS (36" LONG RODS)
24	Flex Coupling Rest (PE x PE)	7	$1,342.86	$ 9,400.00	COUPLING	HELP/ASSUMED FLEX COUPLING W/3-HOLE LUGS AND RODS (36" LONG RODS)
12	Split Sleeve Coupling (PE x PE)	6	$632.86	$ 3,797.14	COUPLING	
16	Split Sleeve Coupling (PE x PE)	1	$1,077.14	$ 1,077.14	COUPLING	
1	Link Seal ~1ft Length	3	$22.29	$ 66.86	PENETRATIONS	HELP/ASSUME 1.00" IPS THRU SLEEVE
1-1/2	Link Seal ~1ft Long	1	$37.86	$ 37.86	PENETRATIONS	HELP/ASSUME 1.50" IPS THRU SLEEVE
12	Link Seal	44	$263.31	$ 11,585.83	PENETRATIONS	HELP/ASSUME 12" DIP THRU SLEEVE
14	Link Seal	4	$681.94	$ 2,727.77	PENETRATIONS	HELP/ASSUME 14" DIP THRU SLEEVE
18	Link Seal ~1.5ft Length	3	$842.40	$ 2,527.20	PENETRATIONS	HELP/ASSUME 18" DIP THRU SLEEVE
28	Link Seal ~1ft length	8	$498.21	$ 3,985.71	PENETRATIONS	HELP/ASSUME 28" STL THRU SLEEVE
3	TS Tapping Saddle w/ Flg Connect	6	$1,135.03	$ 6,810.17	DUCTILE	HELP/WHAT IS SIZE/MATERIAL FOR SADDLE, WHAT IS OUTLET SIZE

	0	#####	**AUSTIN HANCOCK**							
2000	1	EA	10"x 2' 0" FLG x FLG 401/PC			$728.46	$728.46	DI SPLS	P401	AG
2010	8	EA	12"x 2' 0" FLG x FLG 401/PC			$940.12	$7,520.96	DI SPLS	P401	AG
2020	3	EA	12"x 2' 6" FLG x FLG 401/PC			$1,037.40	$3,112.20	DI SPLS	P401	AG
2030	2	EA	12"x 2' 6" FLG x PE 401/PC			$751.64	$1,503.28	DI SPLS	P401	AG
2040	20	EA	12"x 3' 0" FLG x FLG 401/PC			$1,134.68	$22,693.60	DI SPLS	P401	AG
2050	2	EA	12"x 3' 0" FLG x PE 401/PC			$848.92	$1,697.84	DI SPLS	P401	AG
2060	4	EA	12"x 4' 0" FLG x WC x PE 401/PC		EMBED W/TAPT END(S)	$1,251.48	$5,005.92	DI EMBED	P401	AG
2070	3	EA	12"x 4' 0" FLG x WC x PE 401/PC		EMBED W/TAPT END(S)	$1,251.48	$3,754.44	DI EMBED	P401	AG
2080	2	EA	12"x 4' 6" FLG x PE 401/PC			$1,140.76	$2,281.52	DI SPLS	P401	AG
2090	2	EA	12"x 5' 6" FLG x FLG 401/PC			$1,621.08	$3,242.16	DI SPLS	P401	AG
2100	1	EA	12"x 6' 0" FLG x FLG 401/PC			$1,718.36	$1,718.36	DI SPLS	P401	AG
2110	2	EA	12"x 6' 6" FLG x FLG 401/PC			$1,815.64	$3,631.28	DI SPLS	P401	AG
2120	1	EA	12"x 8' 0" FLG x WC x PE 401/PC		EMBED W/TAPT END(S)	$2,029.72	$2,029.72	DI EMBED	P401	AG
2130	1	EA	14"x 1' 0" FLG x PE 401/PC			$674.88	$674.88	DI SPLS	P401	AG
2140	9	EA	14"x 1' 6" FLG x FLG 401/PC			$1,207.64	$10,868.76	DI SPLS	P401	AG
2150	7	EA	14"x 1' 6" FLG x PE 401/PC			$800.66	$5,604.62	DI SPLS	P401	AG
2160	6	EA	14"x 2' 0" FLG x FLG 401/PC			$1,333.42	$8,000.52	DI SPLS	P401	AG
2170	2	EA	14"x 2' 0" FLG x WC x PE 401/PC		EMBED W/TAPT END(S)	$1,180.44	$2,360.88	DI EMBED	P401	AG
2180	4	EA	12"x 2' 0" FLG x FLG 401/PC 1- (2"TOL)			$1,604.12	$6,416.48	DI SPLS	P401	AG
2190	1	EA	14"x 2' 6" FLG x FLG 401/PC			$1,459.20	$1,459.20	DI SPLS	P401	AG
2200	9	EA	14"x 4' 0" FLG x FLG 401/PC			$1,836.54	$16,528.86	DI SPLS	P401	AG
2210	1	EA	16"x 1' 6" FLG x FLG 401/PC			$1,414.74	$1,414.74	DI SPLS	P401	AG
2220	2	EA	16"x 2' 0" FLG x FLG 401/PC			$1,557.62	$3,115.24	DI SPLS	P401	AG
2230	1	EA	16"x 4' 0" FLG x FLG 401/PC			$2,129.14	$2,129.14	DI SPLS	P401	AG
2240	2	EA	16"x 4' 0" FLG x WC x PE 401/PC		EMBED W/TAPT END(S)	$1,940.40	$3,880.80	DI EMBED	P401	AG
2250	1	EA	16"x 8' 6" FLG x FLG 401/PC			$3,415.06	$3,415.06	DI SPLS	P401	AG
2260	5	EA	18"x 3' 6" FLG x FLG 401/PC			$2,337.00	$11,685.00	DI SPLS	P401	AG
2270	3	EA	18"x 3' 6" FLG x FLG 401/PC 1- (2"TOL) 1- (3"TOL)			$3,997.00	$11,991.00	DI SPLS	P401	AG
2280	2	EA	18"x 4' 0" FLG x FLG 401/PC			$2,504.20	$5,008.40	DI SPLS	P401	AG
2290	5	EA	18"x 6' 6" FLG x FLG 401/PC			$3,340.20	$16,701.00	DI SPLS	P401	AG
2300	2	EA	18"x 7' 0" FLG x FLG 401/PC			$3,507.40	$7,014.80	DI SPLS	P401	AG
2310	1	EA	18"x 10' 6" FLG x FLG 401/PC			$4,677.80	$4,677.80	DI SPLS	P401	AG
2320	3	EA	18"x 12' 6" FLG x FLG 401/PC			$5,346.60	$16,039.80	DI SPLS	P401	AG
2330	4	EA	20"x 1' 6" FLG x WC x PE 401/PC		EMBED W/TAPT END(S)	$1,649.64	$6,598.56	DI EMBED	P401	AG
2340	1	EA	24"x 1' 0" PE x PE 401/PC			$551.00	$551.00	DI SPLS	P401	AG
2350	4	EA	24"x 1' 6" FLG x FLG 401/PC			$2,433.14	$9,732.56	DI SPLS	P401	AG
2360	5	EA	24"x 1' 6" FLG x PE 401/PC			$1,581.56	$7,907.80	DI SPLS	P401	AG
2370	8	EA	24"x 1' 6" FLG x PE 401/PC			$1,581.56	$12,652.48	DI SPLS	P401	AG
2380	1	EA	24"x 1' 6" FLG x PE 401/PC 1- (4"TOL)			$3,759.14	$3,759.14	DI SPLS	P401	AG
2390	3	EA	24"x 2' 0" FLG x FLG 401/PC			$2,666.84	$8,000.52	DI SPLS	P401	AG
2400	1	EA	24"x 2' 0" FLG x PE 401/PC			$1,815.26	$1,815.26	DI SPLS	P401	AG
2410	1	EA	24"x 2' 0" FLG x PE 401/PC 1- (4"TOL)			$3,992.84	$3,992.84	DI SPLS	P401	AG
2420	2	EA	24"x 2' 6" FLG x FLG 401/PC			$2,900.54	$5,801.08	DI SPLS	P401	AG
2430	19	EA	24"x 3' 0" FLG x FLG 401/PC			$3,134.24	$59,550.56	DI SPLS	P401	AG
2440	6	EA	24"x 3' 6" FLG x FLG 401/PC			$3,367.94	$20,207.64	DI SPLS	P401	AG
2450	1	EA	24"x 3' 6" PE x PE 401/PC			$1,719.50	$1,719.50	DI SPLS	P401	AG
2460	1	EA	24"x 3' 6" FLG x FLG 401/PC 1- (4"TOL)			$4,693.94	$4,693.94	DI SPLS	P401	AG
2470	5	EA	24"x 4' 0" FLG x FLG 401/PC			$3,601.64	$18,008.20	DI SPLS	P401	AG
2480	1	EA	24"x 5' 0" FLG x FLG 401/PC			$4,069.04	$4,069.04	DI SPLS	P401	AG
2490	1	EA	24"x 5' 6" FLG x FLG 401/PC			$4,302.74	$4,302.74	DI SPLS	P401	AG
2500	1	EA	24"x 5' 6" PE x PE 401/PC			$2,654.30	$2,654.30	DI SPLS	P401	AG
2510	1	EA	24"x 6' 0" FLG x FLG 401/PC			$4,536.44	$4,536.44	DI SPLS	P401	AG
2520	2	EA	24"x 6' 6" FLG x FLG 401/PC			$4,770.14	$9,540.28	DI SPLS	P401	AG
2530	1	EA	24"x 7' 0" FLG x FLG 401/PC			$5,003.84	$5,003.84	DI SPLS	P401	AG
2540	1	EA	24"x 13' 6" FLG x PE 401/PC			$7,190.36	$7,190.36	DI SPLS	P401	AG
2550	1	EA	24"x 15' 0" FLG x FLG 401/PC			$8,743.04	$8,743.04	DI SPLS	P401	AG
2560	1	EA	24"x 17' 6" PE x PE 401/PC			$8,263.10	$8,263.10	DI SPLS	P401	AG
2570	29	FT	12" R.J. DIP CL350 18' NOM 401/TC W/ NIT		RESTRAINED JOINT	$97.64	$2,831.60	DI PIPE	P401	AG
2580	18	FT	14" R.J. DIP CL350 17'9 NOM 401/TC W/ NIT		RESTRAINED JOINT	$135.11	$2,431.90	DI PIPE	P401	AG
2590	30	FT	16" R.J. DIP CL350 17'9 NOM 401/TC W/ NIT		RESTRAINED JOINT	$150.47	$4,514.19	DI PIPE	P401	AG
2600	8	EA	12" FLG 90 401/PC			$1,328.94	$10,631.52	DI FTGS	P401	AG
2610	9	EA	14" FLG 90 401/PC			$1,662.44	$14,961.96	DI FTGS	P401	AG
2620	4	EA	16" FLG 90 401/PC			$2,040.10	$8,160.40	DI FTGS	P401	AG
2630	9	EA	18" FLG 90 401/PC			$2,658.80	$23,929.20	DI FTGS	P401	AG
2640	18	EA	24" FLG 90 401/PC			$4,983.18	$89,697.24	DI FTGS	P401	AG
2650	1	EA	12" FLG 45 401/PC			$1,180.36	$1,180.36	DI FTGS	P401	AG
2660	11	EA	12" FLG TEE 401/PC			$1,888.76	$20,776.36	DI FTGS	P401	AG
2670	3	EA	14" FLG TEE 401/PC			$2,622.00	$7,866.00	DI FTGS	P401	AG
2680	35	EA	24" FLG TEE 401/PC			$6,918.86	$242,160.10	DI FTGS	P401	AG
2690	2	EA	12x10" FLG CON RED 401/PC			$1,148.16	$2,296.32	DI FTGS	P401	AG
2700	4	EA	12x10" FLG CON RED 401/PC 1- (2"TOL)			$1,812.16	$7,248.64	DI FTGS	P401	AG
2710	3	EA	14x10" FLG CON RED 401/PC 1- (2"TOL)			$2,074.82	$6,224.46	DI FTGS	P401	AG
2720	7	EA	14x12" FLG CON RED 401/PC			$1,353.78	$9,476.46	DI FTGS	P401	AG
2730	1	EA	16x12" FLG CON RED 401/PC 1- (2"TOL)			$2,341.62	$2,341.62	DI FTGS	P401	AG
2740	3	EA	18x12" FLG CON RED 401/PC			$1,932.00	$5,796.00	DI FTGS	P401	AG
2750	6	EA	18x16" FLG CON RED 401/PC			$2,140.84	$12,845.04	DI FTGS	P401	AG
2760	4	EA	24x12" FLG CON RED 401/PC			$3,629.40	$14,517.60	DI FTGS	P401	AG
2770	4	EA	24x18" FLG CON RED 401/PC			$3,848.36	$15,393.44	DI FTGS	P401	AG
2780	4	EA	24x20" FLG CON RED 401/PC			$4,070.54	$16,282.16	DI FTGS	P401	AG
2790	8	EA	14" FLG 22.5 401/PC			$1,575.04	$12,600.32	DI FTGS	P401	AG
2800	1	EA	16" FLG 22.5 401/PC			$1,753.06	$1,753.06	DI FTGS	P401	AG
2810	7	EA	14x12" FLG TEE 401/PC			$2,573.70	$18,015.90	DI FTGS	P401	AG
2820	1	EA	16x12" FLG TEE 401/PC			$2,596.70	$2,596.70	DI FTGS	P401	AG
2830	5	EA	24x12" FLG TEE 401/PC			$4,891.18	$24,455.90	DI FTGS	P401	AG
2840	2	EA	24x16" FLG TEE 401/PC			$4,993.30	$9,986.60	DI FTGS	P401	AG
2850	3	EA	24x18" FLG TEE 401/PC			$7,567.46	$22,702.38	DI FTGS	P401	AG
2860	2	EA	24" MJ 45 C153 401/TC			$2,463.30	$4,926.60	DI FTGS	P401	AG
2870	3	EA	12" MJ 90 C153 401/TC			$860.66	$2,581.98	DI FTGS	P401	AG
2880	4	EA	16" MJ 90 C153 401/TC			$1,521.68	$6,086.72	DI FTGS	P401	AG
2890	1	EA	24" MJ 90 C153 401/TC			$3,320.74	$3,320.74	DI FTGS	P401	AG
2900	3	EA	12" MJ TEE C153 401/TC			$1,049.72	$3,149.16	DI FTGS	P401	AG
2910	2	EA	14" MJ TEE C153 401/TC			$1,558.48	$3,116.96	DI FTGS	P401	AG
5720	4	EA	24" BLIND FLG 401/PC		CONFIRM LINING	$4,210.38	$16,841.52	DI FTGS	P401	AG
6760	31	EA	12" WEDGE R.J. SET (DD) NIT			$163.66	$5,073.46	DI REST		AG
6770	7	EA	14" WEDGE R.J. SET (DD) NIT			$214.94	$1,504.58	DI REST		AG
6780	12	EA	16" WEDGE R.J. SET (DD) NIT			$293.58	$3,522.96	DI REST		AG
6790	6	EA	24" WEDGE R.J. SET (DD) NIT			$604.63	$3,627.78	DI REST		AG
6860	4	EA	14" FLEX COUPLING, SLEEVE TYPE (08) LUGS (04) RODS		CS_FBE.NBR.STD HARDWARE	$997.14	$3,988.57	U-CPLG		AG
6870	10	EA	18" FLEX COUPLING, SLEEVE TYPE (08) LUGS (04) RODS		CS_FBE.NBR.STD HARDWARE	$1,157.14	$11,571.43	U-CPLG		AG
6880	7	EA	24" FLEX COUPLING, SLEEVE TYPE (08) LUGS (04) RODS		CS_FBE.NBR.STD HARDWARE	$1,342.86	$9,400.00	U-CPLG		AG
6890	6	EA	12" FLEX COUPLING, SLEEVE TYPE (04) LUGS (02) RODS		CS_FBE.NBR.STD HARDWARE	$632.86	$3,797.14	U-CPLG		AG
6900	1	EA	16" FLEX COUPLING, SLEEVE TYPE (08) LUGS (04) RODS		CS_FBE.NBR.STD HARDWARE	$1,077.14	$1,077.14	U-CPLG		AG
7260	3	EA	MODULAR MECH SEAL SET, EPDM/316SST (1) WRAP		INSTALL 01" IPS (01.32) THRU 2.50" STL SLEEVE	$22.29	$66.86	U-MECH SEAL		AG
7270	1	EA	MODULAR MECH SEAL SET, EPDM/316SST (1) WRAP		INSTALL 1.5" IPS (01.90) THRU 3.50" STL SLEEVE	$37.86	$37.86	U-MECH SEAL		AG
7300	44	EA	MODULAR MECH SEAL SET, EPDM/316SST (1) WRAP		INSTALL 12" DIP (13.20) THRU 16" STL SLEEVE	$263.31	$11,585.83	U-MECH SEAL		AG
7310	4	EA	MODULAR MECH SEAL SET, EPDM/316SST (1) WRAP		INSTALL 14" DIP (15.30) THRU 20" STL SLEEVE	$681.94	$2,727.77	U-MECH SEAL		AG
7320	3	EA	MODULAR MECH SEAL SET, EPDM/316SST (1) WRAP		INSTALL 18" DIP (19.50) THRU 24" STL SLEEVE	$842.40	$2,527.20	U-MECH SEAL		AG
7330	8	EA	MODULAR MECH SEAL SET, EPDM/316SST (1) WRAP		INSTALL 28" IPS (28.00) THRU 32" STL SLEEVE	$498.21	$3,985.71	U-MECH SEAL		AG
7690	6	EA	18" X 03" CS SADDLE W/FLGD OUTLET			$1,135.03	$6,810.17	U-SADDLE		AG
7730	1	EA	**SCRAP SURCHARGE ESTIMATE FOR BURIED DIP ONLY**		**APRIL 2022 $150/TON ESTIMATE**	########	**$10,200.00**			

C&B PIPING, INC.
JEFF CASSANO
(602) 828-6742
jcassano@cbpiping.com

CITY/ST **CHANDLER, AZ**
JOB NAME **RWIF, RECLAIMED WATER INTERCONNECT FACILITY**
WILSON ENGINEERING
BID **25-Mar**
REVISION: **R-0**
ADDENDUMS: **A-0**
ESTIMATOR: **CUSTOMER'S LIST (MCCARTHY) UG-REED/AG-AUSTIN**

C&B Piping, Inc. is a full service manufacturer of treatment plant piping systems. We are a ductile iron & steel pipe fabricator. We are also an industrial linings and coatings applicator.

We are pleased to offer for your consideration, our proposal covering ductile iron pipe and fittings for the above referenced project. Our quotation is based fully on our interpretation of the documents and other instructions we have. It is not a guaranteed complete scope of materials. Please review our notes, item descriptions, and quantities very carefully to determine if our proposal meets your intended needs. We will gladly work with you in reviewing the final scope.

Validity
This quotation is valid for acceptance within 30 days of the date of this quotation. After 30 days, contact C&B Piping to request updated quotation. C&B Piping Quotations are based on agreement in full with C&B Standard Terms and Conditions of sale which are available upon request.

Freight
All prices are FOB factory with full truckload freight allowed to jobsite in the 48 continental USA states. Full truckload releases are defined as $40,000 minimum release quantity. For all other releases, freight will be prepaid and added to invoice.

Payment Terms
We offer payment terms of NET 30. All past due invoices will be charged 1-1/2% interest per month. No retention is allowed. The bill of material listed in our proposal is our interpretation of the contract drawings or your material list. It is offered as assistance in preparing your total estimate but is not guaranteed as to the final material that would actually be required. Final amounts invoiced will be based on the actual quantities released by customer and shipped to the jobsite.

Escalation
If signed purchase order agreement is acceptable to both parties within 30 days of quotation, Ductile Iron Pipe, Fittings, Fabrication, and Restraints prices will be held firm for 6 months from the date of this bid for all deliveries to the jobsite. All products delivered after 6 months from date of bid will be re-quoted prior to shipment.

Surcharges
C&B will pass through surcharges currently in place for scrap & fuel. Surcharges will change with economic factors. Any surcharge estimates listed at the bottom of our quotation are presented for information only and to assist in estimating the potential impact. If surcharges cannot be passed through by the contractor, it is the responsibility of the contractor to cover any and all potential costs of these surcharges that will be invoiced by C&B Piping. C&B reserves the right to implement new surcharges that arise from unexpected and volatile market conditions before and during project delivery.

Force Majeure
In the event Force Majeure is declared, C&B Piping and all affiliates will not be liable for any causes of action for breach or damages that arise from our inability to meet our delivery or pricing terms.

Taxes
The unit prices and totals shown on our quotation do not include applicable sales taxes. If your project is not taxable, we require a tax exemption certificate or resale certificate on file prior to starting the project. If the project is taxable, all applicable taxes will be paid to the appropriate taxing agencies by the customer.

Layout Drawings:
C&B Piping, Inc. offers a layout drawing service for Ductile Iron Piping Systems to complement the manufacture and supply of the products we furnish. We will draw all or a part of the project based on customer request. The cost of each drawing is $1000 Each drawing may be revised twice without additional charge. Additional revisions are billed at $75/hour. There is a $500 setup charge for any request of 5 drawings or less. This setup charge is waived for projects requiring more than 5 drawings. Some project drawing costs may be bid using a lump sum amount to cover the ductile iron scope of supply.

C&B Piping offers BIM Modeling Service for piping supplied under contract with C&B. BIM Model Coordination is billed at a rate of $100/hour.

Quotation Specifications:

Pipe:
We have quoted pipe class as shown.
Flanged Pipe is quoted as Class 53, with 125# flanges
Grooved Pipe is quoted as Class 53 with Rigid Grooves per AWWA C606
Threaded connections to DIP are only quoted if shown on the Mechanical Drawings. All other threaded connections or Saddles required will be additional cost at time of release.

Fittings:
Flange: Full Body Ductile Iron 125# (ANSI/AWWA C110/A21.10)
Grooved: Victaulic per AWWA C606
Mechanical Joint: Compact MJ per ANSI/AWWA C153/A21.53

Lining:
CL - Standard Thickness Cement (ANSI/AWWA C104/A21.4) Field Repair Kits are $65.00 each available to order.
401 - Protecto 401 Ceramic Epoxy. Field Repair Kits are $70 each available to order as needed for your project

Coating:
BUR TC - Standard Asphalt Tar 1 mil per AWWA C151
EXP PC - Shop Coat of Sherwin Williams Macropoxy 646 Epoxy @ 3-5 mils DFT (See Qualifications Notes below)
SUB PC - Shop Coat of Sherwin Williams Macropoxy 646 Epoxy @ 3-5 mils DFT (See Qualifications Notes below)

Restrained Joints:
PIPE Proprietary Restrained Joint
FTGS MJ w/ Wedge Restraints

Gaskets:
PO/MJ Nitrile where listed on our quotation
GRV Victaulic S Nitrile

Hardware (where listed)
BUR MJ T-Bolts for buried MJ joints are quoted as Std Low Alloy Steel
EXP Victaulic as Zinc Plated B/N

Origin:
IMP Some materials quoted may be globally sourced. If domestic only materials are required, prices may be adjusted accordingly.

Wall Pipes:
Wall Collars thicknesses are quoted as industry standard - C&B Submittal

Polyethylene Encasement:
V-Bio Polyethylene Encasement per ANSI/AWWA C105/A21.5 is quoted separately.

QUALIFICATIONS:

SHOP COAT: C&B Piping offers a shop coat of temporary protection for items noted on our quotation. Responsibility for final system compatibility, proper field surface preparation, field acceptance as system primer, field repair to damaged coating are all by others. If shop coat is not desired, it can be ordered as Bare, or fully removed by field contractor on the jobsite at cost by others.

CATHODIC PROTECTION: C&B does not furnish Cathodic Protection. We have ***NOT*** furnished Steel Bonding Pads to protect special epoxy lined or glass lined pipe spigots unless specifically listed below on our quotation. If they are needed, we can furnish costs upon request.

FLANGE-TYTE® GASKET FULL FACE -1/8" THICKNESS - 3 O-RING SEAL FEATUR

Approximate Bolt Torque (ft-lb)

	04"	06"	08"	10"	12"	14"	16"	18"	20"	24"	30"	36"	42"	48"	54"	60"	6
150 PSI --->																	
250 PSI --->	90	90	90	90	90	110	110	120	120	130	140	160	585	6			
350 PSI --->	110	110	110	130	130	150	160	180	200	2							

Improper handling, storage, and/or improper installation will void all warranties. C&B PIPING, INC recommends the use of molded low torque 1/8" thick rubber gaskets for use with threaded ductile iron flanged joints. FLANGE-TYTE® or TORUSEAL® are both acceptable products. The use of alternative gaskets could result in excessive torques and damaged flanges and thus void all warranties.

Description	UoM	Size		CMNT	UNIT PRICE	EXTENDED	
RW 18 DIEL from Pump Discharge to Discharge Header			**RW 18 CMNT FROM PUMP DISCHARGE TO HEADER**				
DI FxF Epoxy Lined/Primer Coat ~w/ 2" TOL for pressure guage & 3" tap for air/vacuum valve	EACH	18x3' 6"	18"x 3' 6" FLG x FLG CL/PC 1- (2"TOL) 1- (3"TOL)		$ 3,592.68	$ 3,592.68	$ 4,023.80
DI FxF Epoxy Lined/Primer Coat	EACH	18x3' 6"	18"x 3' 6" FLG x FLG CL/PC		$ 1,932.68	$ 1,932.68	$ 2,164.60
DI FxF Epoxy Lined/Primer Coat ~w/ 2" TOL for pressure guage & 3" tap for air/vacuum valve	EACH	18x3' 6"	18"x 3' 6" FLG x FLG CL/PC 1- (2"TOL) 1- (3"TOL)		$ 3,592.68	$ 3,592.68	$ 4,023.80
DI FxF Epoxy Lined/Primer Coat	EACH	18x3' 6"	18"x 3' 6" FLG x FLG CL/PC		$ 1,932.68	$ 1,932.68	$ 2,164.60
DI FxF Epoxy Lined/Primer Coat ~w/ 2" TOL for pressure guage & 3" tap for air/vacuum valve	EACH	18x3' 6"	18"x 3' 6" FLG x FLG CL/PC 1- (2"TOL) 1- (3"TOL)		$ 3,592.68	$ 3,592.68	$ 4,023.80
DI FxF Epoxy Lined/Primer Coat	EACH	18x3' 6"	18"x 3' 6" FLG x FLG CL/PC		$ 1,932.68	$ 1,932.68	$ 2,164.60
DI FxF Epoxy Lined/Primer Coat	EACH	18x12' 6"	18"x 12' 6" FLG x FLG CL/PC		$ 3,902.60	$ 11,707.80	$ 4,370.91
DI FxF Epoxy Lined/Primer Coat ~FLxPE spool	EACH	18x1' 0"	18"x 1' 0" FLG x PE CL/PC		$ 812.06	$ 1,624.12	$ 909.51
DI FxF Epoxy Lined/Primer Coat ~PExPE spool	EACH	18x1' 0"	18"x 1' 0" PE x PE CL/PC		$ 273.98	$ 273.98	$ 306.86
DI FxF Epoxy Lined/Primer Coat ~FLxPE spool	EACH	18x1' 0"	18"x 1' 0" FLG x PE CL/PC		$ 812.06	$ 1,624.12	$ 909.51
DI FxF Epoxy Lined/Primer Coat	EACH	18x1' 0"	18"x 1' 0" FLG x FLG CL/PC		$ 1,385.48	$ 1,385.48	$ 1,551.74
DI FxF Epoxy Lined/Primer Coat ~PExPE spool	EACH	18x1' 0"	18"x 1' 0" PE x PE CL/PC		$ 273.98	$ 273.98	$ 306.86
DI FxF Epoxy Lined/Primer Coat ~FLxPE spool	EACH	18x1' 0"	18"x 1' 0" FLG x PE CL/PC		$ 812.06	$ 812.06	$ 909.51
DI FxF Epoxy Lined/Primer Coat	EACH	18x1' 6"	18"x 1' 6" FLG x FLG CL/PC		$ 1,494.92	$ 1,494.92	$ 1,674.31
DI FxF Epoxy Lined/Primer Coat ~PExPE spool	EACH	18x1' 0"	18"x 1' 0" PE x PE CL/PC		$ 273.98	$ 273.98	$ 306.86
DI FxF Epoxy Lined/Primer Coat ~FLxPE spool	EACH	18x1' 0"	18"x 1' 0" FLG x PE CL/PC		$ 812.06	$ 812.06	$ 909.51
DI FxF Epoxy Lined/Primer Coat	EACH	18x1' 6"	18"x 1' 6" FLG x FLG CL/PC		$ 1,494.92	$ 1,494.92	$ 1,674.31
FxF Epoxy/Primer 90 Ell	EACH	18	18" FLG 90 CL/PC		$ 1,346.55	$ 8,079.30	$ 1,508.14
FxF Epoxy/Primer Conc Red	EACH	18x12	18x12" FLG CON RED CL/PC		$ 844.12	$ 2,532.36	$ 945.41
RW 18-24 DIEL from Discharge Header to YP			**RW 18-24 CMNT FROM HEADER TO YARD**			$ -	
DI FxF Epoxy Lined/Primer Coat ~w/ 4" tap for air/vacuum valve	EACH	24x2' 0"	24"x 2' 0" FLG x FLG CL/PC 1- (4"TOL)		$ 3,679.72	$ 3,679.72	$ 4,121.29
DI FxF Epoxy Lined/Primer Coat	EACH	24x15' 0"	24"x 15' 0" FLG x FLG CL/PC		$ 6,394.64	$ 6,394.64	$ 7,162.00
DI FxF Epoxy Lined/Primer Coat	EACH	24x4' 0"	24"x 4' 0" FLG x FLG CL/PC		$ 2,975.40	$ 2,975.40	$ 3,332.45
DI FxF Epoxy Lined/Primer Coat	EACH	24x3' 6"	24"x 3' 6" FLG x FLG CL/PC		$ 2,819.98	$ 2,819.98	$ 3,158.38
DI FxF Epoxy Lined/Primer Coat	EACH	18x10' 6"	18"x 10' 6" FLG x FLG CL/PC		$ 3,464.84	$ 3,464.84	$ 3,880.62
FxF Epoxy/Primer 90 Ell	EACH	24	24" FLG 90 CL/PC		$ 2,714.25	$ 13,571.25	$ 3,039.96
FxF Epoxy/Primer Conc Red	EACH	24x18	24x18" FLG CON RED CL/PC		$ 1,927.47	$ 3,854.94	$ 2,158.77
FxF Epoxy/Primer Tee	EACH	24	24" FLG TEE CL/PC		$ 3,864.81	$ 23,188.86	$ 4,328.59
RW 18 DIEL from Discharge Header to YP			**RW 18 CMNT FROM HEADER TO YARD**			$ -	
DI FxF Epoxy Lined/Primer Coat	EACH	18x6' 6"	18"x 6' 6" FLG x FLG CL/PC		$ 2,589.32	$ 5,178.64	$ 2,900.04
DI FxF Epoxy Lined/Primer Coat	EACH	18x7' 0"	18"x 7' 0" FLG x FLG CL/PC		$ 2,698.76	$ 2,698.76	$ 3,022.61
DI FxF Epoxy Lined/Primer Coat	EACH	18x6' 6"	18"x 6' 6" FLG x FLG CL/PC		$ 2,589.32	$ 5,178.64	$ 2,900.04
DI FxF Epoxy Lined/Primer Coat	EACH	18x7' 0"	18"x 7' 0" FLG x FLG CL/PC		$ 2,698.76	$ 2,698.76	$ 3,022.61
FxF Epoxy/Primer 90 Ell	EACH	18	18" FLG 90 CL/PC		$ 1,346.55	$ 4,039.65	$ 1,508.14
FxF Epoxy/Primer Conc Red	EACH	18x16	18x16" FLG CON RED CL/PC		$ 976.19	$ 5,857.14	$ 1,093.33
RW 24 DIEL Strainer Effluent			**RW 24 CMNT STRAINER EFFLUENT**			$ -	
DI FxF Epoxy Lined/Primer Coat ~PExPE	EACH	24x5' 6"	24"x 5' 6" PE x PE CL/PC		$ 1,793.22	$ 1,793.22	$ 2,008.41
DI FxF Epoxy Lined/Primer Coat	EACH	24x5' 6"	24"x 5' 6" FLG x FLG CL/PC		$ 3,441.66	$ 3,441.66	$ 3,854.66
DI FxF Epoxy Lined/Primer Coat	EACH	24x5' 0"	24"x 5' 0" FLG x FLG CL/PC		$ 3,286.24	$ 3,286.24	$ 3,680.59
DI FxF Epoxy Lined/Primer Coat ~FLxPE	EACH	24x13' 6"	24"x 13' 6" FLG x PE CL/PC		$ 5,076.80	$ 5,076.80	$ 5,686.02
DI FxF Epoxy Lined/Primer Coat ~PExPE	EACH	24x17' 6"	24"x 17' 6" PE x PE CL/PC		$ 5,523.30	$ 5,523.30	$ 6,186.10
DI FxF Epoxy Lined/Primer Coat ~PExPE	EACH	24x1' 0"	24"x 1' 0" PE x PE CL/PC		$ 394.44	$ 394.44	$ 441.77
DI FxF Epoxy Lined/Primer Coat ~PExPE	EACH	24x3' 6"	24"x 3' 6" PE x PE CL/PC		$ 1,171.54	$ 1,171.54	$ 1,312.12
FxF Epoxy/Primer Red Tee	EACH	24x18	24x18" FLG TEE CL/PC		$ 4,272.30	$ 12,816.90	$ 4,784.98
MJxMJ Epoxy/Asphalt 45 Ell	EACH	24	24" MJ 45 C153 CL/TC		$ 1,213.07	$ 2,426.14	$ 1,358.64
MJxMJ Epoxy/Asphalt 90 Ell	EACH	24	24" MJ 90 C153 CL/TC		$ 1,828.30	$ 1,828.30	$ 2,047.70
						$ -	
						$ 172,324.92	

Company: **COPPER STATE**
Jobname: **Chandler RWIF GMP**
Pricing Due: **3/25/22 5:00 P.M.**
DO NOT INSERT OR DELETE ROWS
IF NEW ROWS ARE NEEDED, USE ROWS AT END OF LIST

Total
Subtotal

Size	Description	Count	Bid Price	Total Bid Price	Filter	Notes
3	307B HDG Bolt 1/8" Neo Gskt Kit	18	$ 8.86	$ 159.48	BNG	
10	307B HDG Bolt 1/8" Neo Gskt Kit	10	$ 59.43	$ 594.30	BNG	
12	307B HDG Bolt 1/8" Neo Gskt Kit	149	$ 62.33	$ 9,287.17	BNG	
14	307B HDG Bolt 1/8" Neo Gskt Kit	78	$ 102.93	$ 8,028.54	BNG	
16	307B HDG Bolt 1/8" Neo Gskt Kit	25	$ 136.32	$ 3,408.00	BNG	
18	307B HDG Bolt 1/8" Neo Gskt Kit	76	$ 178.04	$ 13,531.04	BNG	
20	307B HDG Bolt 1/8" Neo Gskt Kit	8	$ 221.22	$ 1,769.76	BNG	
24	307B HDG Bolt 1/8" Neo Gskt Kit	159	$ 255.95	$ 40,696.05	BNG	
1	316 SST Bolt 1/8" Neo Gskt Kit	3	$ 5.88	$ 17.64	BNG	
2	316 SST Bolt 1/8" Neo Gskt Kit	3	$ 10.28	$ 30.84	BNG	
4	316 SST Bolt 1/8" Neo Gskt Kit	5	$ 16.85	$ 84.25	BNG	
12	316 SST Bolt 1/8" Neo Gskt Kit	6	$ 79.98	$ 479.88	BNG	
18	316 SST Bolt 1/8" Neo Gskt Kit	3	$ 310.07	$ 930.21	BNG	
24	316 SST Bolt 1/8" Neo Gskt Kit	6	$ 431.91	$ 2,591.46	BNG	
12	316 SST Bolt & Isolation Kit	1	$ 106.20	$ 106.20	BNG	
24	316 SST Bolt & Isolation Kit	4	$ 437.00	$ 1,748.00	BNG	
14	307B CS Bolt & Isolation Kit	4	$ 77.70	$ 310.80	BNG	
1/2	PTFE Fractional Gasket	4	$ 17.74	$ 70.96	BNG	
1	Standard PTFE Gasket	4	$ 7.12	$ 28.48	BNG	
1	Standard PTFE Gasket ~	2	$ 7.12	$ 14.24	BNG	
1-1/2	Standard PTFE Gasket	2	$ 10.32	$ 20.64	BNG	
1-1/2	Standard PTFE Gasket ~	4	$ 10.32	$ 41.28	BNG	
2	Standard PTFE Gasket	4	$ 12.66	$ 50.64	BNG	
2-1/2	Standard PTFE Gasket	6	$ 16.74	$ 100.44	BNG	
			$ 2,582.97	**$ 84,100.30**		

Company: **Core and Main**
Jobname: **Chandler RWIF GMP**
Pricing Due: **3/25/22 5:00 P.M.**
DO NOT INSERT OR DELETE ROWS
IF NEW ROWS ARE NEEDED, USE ROWS AT END OF LIST

Total
Subtotal

	Size	Description	Count	Unit Sell	Total Bid Price	Filter	Notes
9	1/2	Type L Hard Copper Tube	24	$ 4.33	$ 103.89	COPPER	
10	1	Type L Hard Copper Tube	92	$ 7.16	$ 658.46	COPPER	
11	1	Type L Hard Copper Tube	1	$ 7.16	$ 7.16	COPPER	
12	2	Type L Hard Copper Tube	101	$ 19.94	$ 2,014.23	COPPER	
13	2	Sch 80 PVC PE Pipe	2	$ 6.03	$ 12.05	PVC	Sold in 20' Lengths
14	4	Sch 80 PVC PE Pipe	17	$ 18.21	$ 309.49	PVC	Sold in 20' Lengths
15	10x2' 0"	DI FxF Epoxy Lined/Primer Coat	1	$ 2,255.29	$ 2,255.29	DUCTILE	
16	12x2' 0"	DI FxF Epoxy Lined/Primer Coat	8	$ 2,910.59	$ 23,284.71	DUCTILE	
17	12x2' 6"	DI FxF Epoxy Lined/Primer Coat	3	$ 3,211.76	$ 9,635.29	DUCTILE	
18	12x2' 6"	DI FxF Epoxy Lined/Primer Coat ~FLxPE pipe spoo	2	$ 2,327.06	$ 4,654.12	DUCTILE	
19	12x3' 0"	DI FxF Epoxy Lined/Primer Coat	20	$ 3,512.94	$ 70,258.82	DUCTILE	
20	12x3' 0"	DI FxF Epoxy Lined/Primer Coat ~FLxPE pipe spoo	2	$ 2,628.24	$ 5,256.47	DUCTILE	
21	12x4' 0"	DI FxF Epoxy Lined/Primer Coat ~FLxPE spool w/ weep ring	4	$ 3,874.12	$ 15,496.47	DUCTILE	
22	12x4' 0"	DI FxF Epoxy Lined/Primer Coat ~FLxPE w/ weep ring	3	$ 3,874.12	$ 11,622.35	DUCTILE	
23	12x4' 6"	DI FxF Epoxy Lined/Primer Coat ~FLxPE pipe spoo	2	$ 3,531.76	$ 7,063.53	DUCTILE	
24	12x5' 6"	DI FxF Epoxy Lined/Primer Coat	2	$ 5,018.82	$ 10,037.65	DUCTILE	
25	12x6' 0"	DI FxF Epoxy Lined/Primer Coat	1	$ 5,320.00	$ 5,320.00	DUCTILE	
26	12x6' 6"	DI FxF Epoxy Lined/Primer Coat	2	$ 5,621.18	$ 11,242.35	DUCTILE	
27	12x8' 0"	DI FxF Epoxy Lined/Primer Coat ~FLxPE spool w/ weep ring	1	$ 6,283.53	$ 6,283.53	DUCTILE	
28	14x1' 0"	DI FxF Epoxy Lined/Primer Coat ~PExFL pipe spoo	1	$ 2,089.41	$ 2,089.41	DUCTILE	
29	14x1' 6"	DI FxF Epoxy Lined/Primer Coat	9	$ 3,738.82	$ 33,649.41	DUCTILE	
30	14x1' 6"	DI FxF Epoxy Lined/Primer Coat ~PExFL pipe spoo	7	$ 2,478.82	$ 17,351.76	DUCTILE	
31	14x2' 0"	DI FxF Epoxy Lined/Primer Coat	6	$ 4,128.24	$ 24,769.41	DUCTILE	
32	14x2' 0"	DI FxF Epoxy Lined/Primer Coat ~FLxPE spool w/ weep ring	2	$ 3,652.94	$ 7,305.88	DUCTILE	
33	14x2' 0"	DI FxF Epoxy Lined/Primer Coat ~w/ 2" TOL for pressure guage	4	$ 4,510.59	$ 18,042.35	DUCTILE	
34	14x2' 6"	DI FxF Epoxy Lined/Primer Coat	1	$ 4,517.65	$ 4,517.65	DUCTILE	
35	14x4' 0"	DI FxF Epoxy Lined/Primer Coat	9	$ 5,685.88	$ 51,172.94	DUCTILE	
36	16x1' 6"	DI FxF Epoxy Lined/Primer Coat	1	$ 4,380.00	$ 4,380.00	DUCTILE	
37	16x2' 0"	DI FxF Epoxy Lined/Primer Coat	2	$ 4,822.35	$ 9,644.71	DUCTILE	
38	16x4' 0"	DI FxF Epoxy Lined/Primer Coat	1	$ 6,591.76	$ 6,591.76	DUCTILE	
39	16x4' 0"	DI FxF Epoxy Lined/Primer Coat ~FLxPE w/ weep ring	2	$ 6,005.88	$ 12,011.76	DUCTILE	
40	16x8' 6"	DI FxF Epoxy Lined/Primer Coat	1	$ 10,572.94	$ 10,572.94	DUCTILE	
41	18x3' 6"	DI FxF Epoxy Lined/Primer Coat	5	$ 7,235.29	$ 36,176.47	DUCTILE	
42	18x3' 6"	DI FxF Epoxy Lined/Primer Coat ~w/ 2" TOL for pressure guage & 3" tap for air/vacuum valv	3	$ 10,238.82	$ 30,716.47	DUCTILE	
43	18x4' 0"	DI FxF Epoxy Lined/Primer Coat	2	$ 7,752.94	$ 15,505.88	DUCTILE	
44	18x6' 6"	DI FxF Epoxy Lined/Primer Coat	5	$ 10,341.18	$ 51,705.88	DUCTILE	
45	18x7' 0"	DI FxF Epoxy Lined/Primer Coat	2	$ 10,858.82	$ 21,717.65	DUCTILE	
46	18x10' 6"	DI FxF Epoxy Lined/Primer Coat	1	$ 14,482.35	$ 14,482.35	DUCTILE	
47	18x12' 6"	DI FxF Epoxy Lined/Primer Coat	3	$ 16,552.94	$ 49,658.82	DUCTILE	
48	20x1' 6"	DI FxF Epoxy Lined/Primer Coat ~FLxPE spool w/ weep ring	4	$ 5,105.88	$ 20,423.53	DUCTILE	
49	24x1' 0"	DI FxF Epoxy Lined/Primer Coat ~PExPE	1	$ 1,705.88	$ 1,705.88	DUCTILE	
50	24x1' 6"	DI FxF Epoxy Lined/Primer Coat	4	$ 7,532.94	$ 30,131.76	DUCTILE	
51	24x1' 6"	DI FxF Epoxy Lined/Primer Coat ~FLxPE	5	$ 4,896.47	$ 24,482.35	DUCTILE	
52	24x1' 6"	DI FxF Epoxy Lined/Primer Coat ~FLxPE Spoo	8	$ 4,896.47	$ 39,171.76	DUCTILE	
53	24x1' 6"	DI FxF Epoxy Lined/Primer Coat ~w/ 4" tap for air/vacuum valve	1	$ 11,067.06	$ 11,067.06	DUCTILE	
54	24x2' 0"	DI FxF Epoxy Lined/Primer Coat	3	$ 8,256.47	$ 24,769.41	DUCTILE	
55	24x2' 0"	DI FxF Epoxy Lined/Primer Coat ~FLxPE	1	$ 5,620.00	$ 5,620.00	DUCTILE	
56	24x2' 0"	DI FxF Epoxy Lined/Primer Coat ~w/ 4" tap for air/vacuum valve	1	$ 11,790.59	$ 11,790.59	DUCTILE	
57	24x2' 6"	DI FxF Epoxy Lined/Primer Coat	2	$ 8,980.00	$ 17,960.00	DUCTILE	
58	24x3' 0"	DI FxF Epoxy Lined/Primer Coat	19	$ 9,703.53	$ 184,367.06	DUCTILE	
59	24x3' 6"	DI FxF Epoxy Lined/Primer Coat	6	$ 10,427.06	$ 62,562.35	DUCTILE	
60	24x3' 6"	DI FxF Epoxy Lined/Primer Coat ~PExPE	1	$ 5,323.53	$ 5,323.53	DUCTILE	
61	24x3' 6"	DI FxF Epoxy Lined/Primer Coat ~w/ 4" tap for air/vacuum valve	1	$ 13,961.18	$ 13,961.18	DUCTILE	
62	24x4' 0"	DI FxF Epoxy Lined/Primer Coat	5	$ 11,150.59	$ 55,752.94	DUCTILE	
63	24x5' 0"	DI FxF Epoxy Lined/Primer Coat	1	$ 12,597.65	$ 12,597.65	DUCTILE	
64	24x5' 6"	DI FxF Epoxy Lined/Primer Coat	1	$ 13,321.18	$ 13,321.18	DUCTILE	
65	24x5' 6"	DI FxF Epoxy Lined/Primer Coat ~PExPE	1	$ 8,217.65	$ 8,217.65	DUCTILE	
66	24x6' 0"	DI FxF Epoxy Lined/Primer Coat	1	$ 14,044.71	$ 14,044.71	DUCTILE	
67	24x6' 6"	DI FxF Epoxy Lined/Primer Coat	2	$ 14,768.24	$ 29,536.47	DUCTILE	
68	24x7' 0"	DI FxF Epoxy Lined/Primer Coat	1	$ 15,491.76	$ 15,491.76	DUCTILE	
69	24x13' 6"	DI FxF Epoxy Lined/Primer Coat ~FLxPE	1	$ 22,261.18	$ 22,261.18	DUCTILE	
70	24x15' 0"	DI FxF Epoxy Lined/Primer Coat	1	$ 27,068.24	$ 27,068.24	DUCTILE	
71	24x17' 6"	DI FxF Epoxy Lined/Primer Coat ~PExPE	1	$ 25,582.35	$ 25,582.35	DUCTILE	
72	12	Ductile Iron Pipe Push On CL350	29	$ 1,491.04	$ 43,240.02	DUCTILE	
73	14	Ductile Iron Pipe Push On CL350	18	$ 1,909.06	$ 34,363.06	DUCTILE	
74	16	Ductile Iron Pipe Push On CL350	30	$ 2,196.00	$ 65,880.00	DUCTILE	
75	1/4	Sch 80 CPVC PE Pipe	696	$ 2.96	$ 2,059.40	CPVC	
76	1/2	Sch 80 CPVC PE Pipe	249	$ 1.25	$ 310.40	CPVC	
77	3/4	Sch 80 CPVC PE Pipe	179	$ 1.66	$ 296.70	CPVC	
78	1	Sch 80 CPVC PE Pipe	925	$ 2.42	$ 2,242.81	CPVC	
79	1	Sch 80 CPVC PE Pipe ~	22	$ 2.42	$ 53.34	CPVC	
80	1-1/2	Sch 80 CPVC PE Pipe	483	$ 3.92	$ 1,892.30	CPVC	
81	1-1/2	Sch 80 CPVC PE Pipe ~	23	$ 3.92	$ 90.11	CPVC	
82	2	Sch 80 CPVC PE Pipe	48	$ 5.26	$ 252.49	CPVC	
83	2	Sch 80 CPVC PE Pipe ~	0	$ 5.26	$ -	CPVC	
84	2-1/2	Sch 80 CPVC PE Pipe	28	$ 8.30	$ 232.44	CPVC	
85	3	Sch 80 CPVC PE Pipe	37	$ 10.84	$ 400.92	CPVC	
86	3	Sch 80 CPVC PE Pipe ~	19	$ 10.84	$ 205.88	CPVC	
87	12	Sch 80 CPVC PE Pipe	329	$ 104.70	$ 34,445.85	CPVC	
88	24	Sch 80 CPVC PE Pipe	132	$ 550.95	$ 72,724.77	CPVC	
89	1/4	316 SS .065 Tubing	42	$ 40.33	$ 1,693.80	SMALL BORE	
90	1	SS A312 316L Pipe Sch 40 T&C	599	$ 6.86	$ 4,107.43	SMALL BORE	
91	1	SS A778 304 Pipe Sch 40 T&C	65	$ 20.51	$ 1,333.43	SMALL BORE	
93	1x3	Victaulic Std Grv GxG Nipple	4	$ 118.57	$ 474.29	SMALL BORE	
94	12	FxF Epoxy/Primer 90 Ell	8	$ 1,887.48	$ 15,099.84	DUCTILE	
95	14	FxF Epoxy/Primer 90 Ell	9	$ 2,361.15	$ 21,250.32	DUCTILE	
96	16	FxF Epoxy/Primer 90 Ell	4	$ 2,897.53	$ 11,590.13	DUCTILE	
97	18	FxF Epoxy/Primer 90 Ell	9	$ 3,776.27	$ 33,986.40	DUCTILE	
98	24	FxF Epoxy/Primer 90 Ell	18	$ 7,077.56	$ 127,396.08	DUCTILE	
99	12	FxF Epoxy/Primer 45 Ell	1	$ 1,676.45	$ 1,676.45	DUCTILE	
100	12	FxF Epoxy/Primer Tee	11	$ 2,682.59	$ 29,508.45	DUCTILE	
101	14	FxF Epoxy/Primer Tee	3	$ 3,724.00	$ 11,172.00	DUCTILE	
102	24	FxF Epoxy/Primer Tee	35	$ 9,826.79	$ 343,937.53	DUCTILE	
103	12x10	FxF Epoxy/Primer Conc Red	2	$ 1,630.72	$ 3,261.44	DUCTILE	
104	12x10	FxF Epoxy/Primer Conc Red ~w/ 2" TOL for pressure guage	4	$ 2,164.05	$ 8,656.21	DUCTILE	
105	14x10	FxF Epoxy/Primer Conc Red ~w/ 2" TOL for pressure guage	3	$ 2,537.11	$ 7,611.32	DUCTILE	
106	14x12	FxF Epoxy/Primer Conc Red	7	$ 1,922.76	$ 13,459.32	DUCTILE	
107	16x12	FxF Epoxy/Primer Conc Red ~w/ 2" TOL for pressure guage	1	$ 2,916.04	$ 2,916.04	DUCTILE	
108	18x12	FxF Epoxy/Primer Conc Red	3	$ 2,744.00	$ 8,232.00	DUCTILE	
109	18x16	FxF Epoxy/Primer Conc Red	6	$ 3,040.61	$ 18,243.68	DUCTILE	
110	24x12	FxF Epoxy/Primer Conc Red	4	$ 5,154.80	$ 20,619.20	DUCTILE	
111	24x18	FxF Epoxy/Primer Conc Red	4	$ 5,465.79	$ 21,863.15	DUCTILE	
112	24x20	FxF Epoxy/Primer Conc Red	4	$ 5,781.35	$ 23,125.39	DUCTILE	
113	14	FxF Epoxy/Primer 22-1/2 Ell	8	$ 2,237.01	$ 17,896.11	DUCTILE	
114	16	FxF Epoxy/Primer 22-1/2 Ell	1	$ 2,489.85	$ 2,489.85	DUCTILE	
115	14x12	FxF Epoxy/Primer Red Tee	7	$ 3,655.40	$ 25,587.80	DUCTILE	
116	16x12	FxF Epoxy/Primer Red Tee	1	$ 3,688.07	$ 3,688.07	DUCTILE	
117	24x12	FxF Epoxy/Primer Red Tee	5	$ 6,946.89	$ 34,734.47	DUCTILE	
118	24x16	FxF Epoxy/Primer Red Tee	2	$ 7,091.93	$ 14,183.87	DUCTILE	
119	24x18	FxF Epoxy/Primer Red Tee	3	$ 10,747.99	$ 32,243.96	DUCTILE	
120	24	MJxMJ Epoxy/Asphalt 45 Ell	2	$ 3,498.60	$ 6,997.20	DUCTILE	
121	12	MJxMJ Epoxy/Asphalt 90 Ell	3	$ 1,222.39	$ 3,667.16	DUCTILE	
122	16	MJxMJ Epoxy/Asphalt 90 Ell	4	$ 2,161.23	$ 8,644.91	DUCTILE	
123	24	MJxMJ Epoxy/Asphalt 90 Ell	1	$ 4,716.41	$ 4,716.41	DUCTILE	
124	12	MJxMJ Epoxy/Asphalt Tee	3	$ 1,490.91	$ 4,472.72	DUCTILE	
125	14	MJxMJ Epoxy/Asphalt Tee	2	$ 2,213.49	$ 4,426.99	DUCTILE	
126	1/2	Wrot Copper 90 Ell	24	$ 0.53	$ 12.65	COPPER	
127	1	Wrot Copper 90 Ell	24	$ 8.94	$ 214.63	COPPER	
128	2	Wrot Copper 90 Ell	22	$ 23.50	$ 517.00	COPPER	
129	1	Wrot Copper Tee	8	$ 29.97	$ 239.77	COPPER	
130	2	Wrot Copper Tee	2	$ 27.24	$ 54.49	COPPER	
131	2x1	304 SS 150# Thd Hex Bushing	15	$ 17.80	$ 267.00	SMALL BORE	
132	1	316 SS 150# Thd 90 Ell	60	$ 9.31	$ 558.86	SMALL BORE	
133	1	316 SS 150# Thd Tee	40	$ 12.27	$ 490.86	SMALL BORE	
134	1	316 SS 150# Thd Union	42	$ 24.10	$ 1,012.20	SMALL BORE	

135	1x1/4	316 SS 150# Thd Hex Bushing	42	$	6.23	$	261.60	SMALL BORE
136	1	304 SS 6000# Thd Cross	15	$	287.94	$	4,319.14	SMALL BORE
137	1/4	CPVC Sch 80 90 Ell	78	$	6.47	$	504.33	CPVC
138	1/2	CPVC Sch 80 90 Ell	64	$	2.53	$	162.19	CPVC
139	3/4	CPVC Sch 80 90 Ell	10	$	3.23	$	32.33	CPVC
140	3/4	CPVC Sch 80 90 Ell ~	4	$	3.23	$	12.93	CPVC
141	1	CPVC Sch 80 90 Ell	176	$	5.12	$	901.70	CPVC
142	1	CPVC Sch 80 90 Ell ~	4	$	5.12	$	20.49	CPVC
143	1-1/2	CPVC Sch 80 90 Ell	54	$	12.38	$	668.71	CPVC
144	1-1/2	CPVC Sch 80 90 Ell ~	8	$	12.38	$	99.07	CPVC
145	2	CPVC Sch 80 90 Ell	37	$	14.95	$	552.97	CPVC
146	2-1/2	CPVC Sch 80 90 Ell	38	$	34.41	$	1,307.62	CPVC
147	3	CPVC Sch 80 90 Ell	21	$	38.96	$	818.14	CPVC
148	12	CPVC Sch 80 90 Ell	12	$	3,604.81	$	43,257.70	CPVC
149	3	CPVC Sch 80 45 Ell	6	$	42.22	$	253.32	CPVC
150	12	CPVC Sch 80 45 Ell	2	$	3,584.60	$	7,169.21	CPVC
151	1/4	CPVC Sch 80 Tee	1	$	5.93	$	5.93	CPVC
152	1/2	CPVC Sch 80 Tee	16	$	5.93	$	94.90	CPVC
153	3/4	CPVC Sch 80 Tee	5	$	6.04	$	30.21	CPVC
154	3/4	CPVC Sch 80 Tee ~	1	$	6.04	$	6.04	CPVC
155	1	CPVC Sch 80 Tee	26	$	7.40	$	192.33	CPVC
156	1	CPVC Sch 80 Tee ~	2	$	7.40	$	14.79	CPVC
157	1-1/2	CPVC Sch 80 Tee	15	$	17.88	$	268.15	CPVC
158	1-1/2	CPVC Sch 80 Tee ~	2	$	17.88	$	35.75	CPVC
159	2	CPVC Sch 80 Tee	17	$	19.90	$	338.37	CPVC
160	2-1/2	CPVC Sch 80 Tee	7	$	50.66	$	354.60	CPVC
161	3	CPVC Sch 80 Tee	2	$	50.66	$	101.32	CPVC
162	12	CPVC Sch 80 Tee	9	$	4,440.66	$	39,965.92	CPVC
163	12	CPVC Sch 80 Coupling	9	$	947.05	$	8,523.49	CPVC
164	24	CPVC Sch 80 Coupling	4	$	8,838.71	$	35,354.85	CPVC
165	1/4	CPVC Sch 80 Union w/Viton O-Ring	8	$	17.25	$	137.97	CPVC
166	1/2	CPVC Sch 80 Union w/Viton O-Ring	12	$	11.48	$	137.75	CPVC
167	3/4	CPVC Sch 80 Union w/Viton O-Ring	5	$	11.99	$	59.93	CPVC
168	1	CPVC Sch 80 Union w/Viton O-Ring	20	$	14.40	$	287.95	CPVC
169	1x1/2	CPVC Sch 80 Reducer Coupling	1	$	9.99	$	9.99	CPVC
170	1-1/2x3/4	CPVC Sch 80 Reducer Coupling	1	$	22.66	$	22.66	CPVC
171	1-1/2x1	CPVC Sch 80 Reducer Coupling	11	$	22.66	$	249.23	CPVC
172	2x1/2	CPVC Sch 80 Reducer Coupling	1	$	29.97	$	29.97	CPVC
173	2x1	CPVC Sch 80 Reducer Coupling	3	$	29.97	$	89.92	CPVC
174	2x1-1/2	CPVC Sch 80 Reducer Coupling	4	$	29.97	$	119.89	CPVC
175	2-1/2x1-1/2	CPVC Sch 80 Reducer Coupling	3	$	34.12	$	102.37	CPVC
176	3x1	CPVC Sch 80 Reducer Coupling ~	2	$	84.38	$	168.77	CPVC
177	3x2	CPVC Sch 80 Reducer Coupling	7	$	68.95	$	482.62	CPVC
178	14x12	CPVC Sch 80 Reducer Coupling	2	$	1,624.30	$	3,248.60	CPVC
179	24x12	CPVC Sch 80 Reducer Coupling	4	$	10,521.66	$	42,086.63	CPVC
180	3	CPVC Sch 80 Plug ~	2	$	109.03	$	218.05	CPVC
181	1x1/2	CPVC Sch 80 Reducing Tee	1	$	15.26	$	15.26	CPVC
182	2-1/2x1-1/2	CPVC Sch 80 Reducing Tee	4	$	42.66	$	170.63	CPVC
183	24x12	CPVC Sch 80 Reducing Tee	20	$	20,105.99	$	402,119.73	CPVC
184	3	CPVC Sch 80 Grooved Cplg Adapter	1	$	52.65	$	52.65	CPVC
185	1-1/2	CPVC Sch 80 Union w/EPDM O-Ring	2	$	29.63	$	59.26	CPVC
186	2-1/2	CPVC Sch 80 Union w/EPDM O-Ring	1	$	80.56	$	80.56	CPVC
187	2	PVC Sch 80 90 Ell	2	$	4.95	$	9.89	PVC
188	4	PVC Sch 80 90 Ell	2	$	19.77	$	39.53	PVC
189	4	PVC Sch 80 Tee	1	$	27.70	$	27.70	PVC
190	1/4x1/4	316 SS Tube x MPT Adapter	84	$	19.24	$	1,616.40	SMALL BORE
191	1	SS A774 304 Sch 40 THD 90 SR Ell	15	$	106.36	$	1,595.36	SMALL BORE
192	1x1/2	SS A774 304 Sch 40 THD Bushing	30	$	151.47	$	4,544.14	SMALL BORE
194	3	Combination Air Relief/Vacuum Va	5	$	7,674.12	$	38,370.59	VALVE - ARV
195	3	Combination Air Relief/Vacuum Va ~w/ throttling device	1	$	7,674.12	$	7,674.12	VALVE - ARV
196	4	Combination Air Relief/Vacuum Va	1	$	14,863.53	$	14,863.53	VALVE - ARV
257	1/2	Ball Valve Thd SST	34	$	288.97	$	9,825.03	VALVE - BALL
258	1	Ball Valve Thd SST	79	$	500.16	$	39,512.41	VALVE - BALL
280	1/2	Sweat Ball Valve	12	$	17.64	$	211.71	VALVE - BALL
281	1	Sweat Ball Valve	14	$	36.63	$	512.80	VALVE - BALL
282	2	Sweat Ball Valve	1	$	98.34	$	98.34	VALVE - BALL
295	2	Sweat Check Valve	1	$	293.29	$	293.29	VALVE - CHECK
310	3	307B HDG Bolt 1/8" Neo Gskt Kit	18	$	9.33	$	167.91	BNG
313	10	307B HDG Bolt 1/8" Neo Gskt Kit	10	$	57.37	$	573.71	BNG
314	12	307B HDG Bolt 1/8" Neo Gskt Kit	149	$	60.40	$	8,999.60	BNG
315	14	307B HDG Bolt 1/8" Neo Gskt Kit	78	$	96.36	$	7,515.86	BNG
316	16	307B HDG Bolt 1/8" Neo Gskt Kit	25	$	127.13	$	3,178.21	BNG
317	18	307B HDG Bolt 1/8" Neo Gskt Kit	76	$	182.13	$	13,841.77	BNG
318	20	307B HDG Bolt 1/8" Neo Gskt Kit	8	$	227.24	$	1,817.94	BNG
319	24	307B HDG Bolt 1/8" Neo Gskt Kit	159	$	304.96	$	48,488.19	BNG
320	1	316 SST Bolt 1/8" Neo Gskt Kit	3	$	12.31	$	36.94	BNG
321	2	316 SST Bolt 1/8" Neo Gskt Kit	3	$	12.89	$	38.66	BNG
322	4	316 SST Bolt 1/8" Neo Gskt Kit	5	$	27.09	$	135.43	BNG
323	12	316 SST Bolt 1/8" Neo Gskt Kit	6	$	106.90	$	641.40	BNG
324	18	316 SST Bolt 1/8" Neo Gskt Kit	3	$	365.09	$	1,095.26	BNG
325	24	316 SST Bolt 1/8" Neo Gskt Kit	6	$	624.00	$	3,744.00	BNG
326	12	316 SST Bolt & Isolation Kit	1	$	289.43	$	289.43	BNG
327	24	316 SST Bolt & Isolation Kit	4	$	1,098.64	$	4,394.57	BNG
328	14	307B CS Bolt & Isolation Kit	4	$	160.97	$	643.89	BNG
329	1	150# Sch 80 CPVC SW Flange	3	$	12.66	$	37.97	CPVC
330	4	150# Sch 80 CPVC SW Flange	2	$	60.86	$	121.73	CPVC
331	1/2	150# Sch 80 CPVC VS PR Flange	6	$	11.34	$	68.05	CPVC
332	1	150# Sch 80 CPVC VS PR Flange	2	$	12.66	$	25.32	CPVC
333	1	150# Sch 80 CPVC VS PR Flange ~	2	$	12.66	$	25.32	CPVC
334	1-1/2	150# Sch 80 CPVC VS PR Flange	6	$	17.16	$	102.99	CPVC
335	2	150# Sch 80 CPVC VS PR Flange	6	$	20.78	$	124.68	CPVC
336	2-1/2	150# Sch 80 CPVC VS PR Flange	6	$	43.05	$	258.33	CPVC
337	3	150# Sch 80 CPVC VS PR Flange	3	$	45.07	$	135.21	CPVC
338	12	150# Sch 80 CPVC VS PR Flange	36	$	1,209.27	$	43,533.86	CPVC
339	24	150# Sch 80 CPVC VS PR Flange	8	$	9,511.71	$	76,093.70	CPVC
340	2	150# Sch 80 PVC Solv Weld Flange	2	$	12.63	$	25.26	PVC
341	24	Ductile Iron C110 Blind Flange	4	$	5,979.96	$	23,919.84	DUCTILE
342	8	304 SS 150# Slip-On Flange	6	$	642.86	$	3,857.14	SST
344	12	304 SS 150# Slip-On Flange	10	$	1,428.57	$	14,285.71	SST
346	2	125# Cast Copper Flange	1	$	140.79	$	140.79	COPPER
347	1/2	PTFE Fractional Gasket	4	$	4.66	$	18.63	BNG
348	1	Standard PTFE Gasket	4	$	6.86	$	27.43	BNG
349	1	Standard PTFE Gasket ~	2	$	6.86	$	13.71	BNG
350	1-1/2	Standard PTFE Gasket	2	$	9.50	$	19.00	BNG
351	1-1/2	Standard PTFE Gasket ~	4	$	9.50	$	38.00	BNG
352	2	Standard PTFE Gasket	4	$	13.71	$	54.86	BNG
353	2-1/2	Standard PTFE Gasket	6	$	18.69	$	112.11	BNG
415	2	Wrot Copper Coupling	1	$	6.64	$	6.64	COPPER
436	1/4	CPVC Sch 80 Coupling	20	$	6.88	$	137.53	CPVC
437	1/2	CPVC Sch 80 Coupling	5	$	2.67	$	13.36	CPVC
438	3/4	CPVC Sch 80 Coupling	6	$	3.74	$	22.44	CPVC
439	1	CPVC Sch 80 Coupling	18	$	5.04	$	90.74	CPVC
440	1-1/2	CPVC Sch 40 Coupling	15	$	9.49	$	142.40	CPVC
441	12	CPVC Sch 80 Coupling	3	$	326.32	$	978.95	CPVC
442	3	Victaulic Style 775 PVC Coupling	1	$	63.93	$	63.93	PVC
443	24	Vic 77S SS w/A Flush Gskt Cplg	4	$	2,654.76	$	10,619.03	SMALL BORE
444	12	Proprietary Restraint Joint	31	$	1,641.60	$	50,889.60	DUCTILE
445	14	Proprietary Restraint Joint	7	$	2,220.62	$	15,544.35	DUCTILE
446	16	Proprietary Restraint Joint	12	$	2,473.98	$	29,687.75	DUCTILE
447	24	Proprietary Restraint Joint	6	$	5,190.82	$	31,144.93	DUCTILE
448	1/2	Stainless Steel Quick Disconnect	4	$	178.57	$	714.29	SMALL BORE
454	14	Flex Coupling Rest (PE x PE)	4	$	1,827.11	$	7,308.46	COUPLING
455	18	Flex Coupling Rest (PE x PE)	10	$	2,436.13	$	24,361.29	COUPLING
456	24	Flex Coupling Rest (PE x PE)	7	$	2,916.26	$	20,413.80	COUPLING
459	1/2x1-1/2	304 SS Sch 40 Nipple TxT	30	$	2.37	$	71.14	SMALL BORE
460	1/2x2	304 SS Sch 40 Nipple TxT	22	$	2.84	$	62.54	SMALL BORE
461	1x2	304 SS Sch 40 Nipple TxT	30	$	4.36	$	130.71	SMALL BORE
462	1x3	304 SS Sch 40 Nipple TxT	15	$	6.93	$	103.93	SMALL BORE
463	1	TPRV PVC Pressure Relief Valve	2	$	1,582.35	$	3,164.71	VALVE - PRV
464	2	Flanged PRV for Water ~PRV	2	$	1,944.02	$	3,888.05	VALVE - PRV
479	10	FxF SST/Rubber Exp Joint Restrai	2	$	3,474.67	$	6,949.33	EXPANSION
480	12	FxF SST/Rubber Exp Joint Restrai	5	$	3,722.67	$	18,613.33	EXPANSION

481	12	FxF SST/Rubber Exp Joint Restrai ~Refer to sheet M-7.03, detail 301, 304 SS	5	$ 3,722.67	$ 18,613.33	EXPANSION		
494	1	Link Seal ~1ft Length	3	$ 20.51	$ 61.54	PENETRATIONS		
495	1-1/2	Link Seal ~1ft Long	1	$ 25.64	$ 25.64	PENETRATIONS		
498	12	Link Seal	44	$ 297.60	$ 13,094.40	PENETRATIONS		
499	14	Link Seal	4	$ 340.11	$ 1,360.46	PENETRATIONS		
500	18	Link Seal ~1.5ft Length	3	$ 244.54	$ 733.63	PENETRATIONS		
501	28	Link Seal ~1ft length	8	$ 828.43	$ 6,627.43	PENETRATIONS		
502	1	Steel Pipe Wall Sleeve ~1ft SS Sleeve	3	$ 102.31	$ 306.94	PENETRATIONS		
503	2	Steel Pipe Wall Sleeve ~1ft long SS Sleeve	1	$ 102.31	$ 102.31	PENETRATIONS		
506	12	Steel Pipe Wall Sleeve ~1ft length, w/ annular ring - Refer to sheet M-7.01 detail 10	20	$ 1,051.29	$ 21,025.75	PENETRATIONS		
507	14	Steel Pipe Wall Sleeve ~refer to sheet M-7.01 detail 102, 1ft length	1	$ 1,059.03	$ 1,059.03	PENETRATIONS		
508	16	Steel Pipe Wall Sleeve ~1.5 ft length, w/ annular ring - Refer to sheet M-7.01 detail 10	1	$ 1,754.81	$ 1,754.81	PENETRATIONS		
509	20	Steel Pipe Wall Sleeve ~1.5 ft SS Sleeve	3	$ 1,945.78	$ 5,837.33	PENETRATIONS		
510	30	Steel Pipe Wall Sleeve ~1ft length, w/ annular ring - Refer to sheet M-7.01 detail 10	2	$ 1,876.35	$ 3,752.70	PENETRATIONS		
511	1	Steel Pipe Floor Sleeve	1	$ 102.31	$ 102.31	PENETRATIONS		
512	14	Steel Pipe Floor Sleeve ~14 inches long, Refer to Sheet M-7.01, detail 10	1	$ 1,358.46	$ 1,358.46	PENETRATIONS		
513	16	Steel Pipe Floor Sleeve ~14 inches long, Refer to Sheet M-7.01, detail 10	1	$ 1,615.39	$ 1,615.39	PENETRATIONS		
524	1/4	CIQC Chemical Injection Quill Co ~Refer to detail 605 sheet M-7.06	2	$ 862.86	$ 1,725.71	CHEMICAL INJECTION	1" Injector per detail M-7.06	
525	1/2	CIQC Chemical Injection Quill Co	2	$ 862.86	$ 1,725.71	CHEMICAL INJECTION	1" Injector per detail M-7.06	
526	1	CIQC Chemical Injection Quill Co	3	$ 862.86	$ 2,588.57	CHEMICAL INJECTION	1" Injector per detail M-7.06	
528	NA	EYEW Emergency Eye Wash Station	5	$ 4,431.23	$ 22,156.13	MISC.	Combo Unit w/ Flow Switch, Alarm, Horn, Scald Protection Valve and Thermal Mixing Valve	
531	1/2	PRV SWPressure Regulator Valve	2	$ 597.44	$ 1,194.87	VALVE - PRESSURE REGULA1	Threaded Only - LF223	
532	1	PRV SWPressure Regulator Valve	3	$ 923.09	$ 2,769.28	VALVE - PRESSURE REGULA1	Threaded Only - LF223	
537	3	TS Tapping Saddle w/ Flg Connect	6	$ 3,998.83	$ 23,992.97	DUCTILE		
					$ 3,773,934.99			
	N/A	ZURN z664 6" WIDE MODULAR TRENCH DRAIN HEAVY DUTY	433	$ 272.00	$ 117,776.00			

Company: **DANA KEMPNER**
Jobname: **Chandler RWIF GMP**
Pricing Due: **3/25/22 5:00 P.M.**
DO NOT INSERT OR DELETE ROWS
IF NEW ROWS ARE NEEDED, USE ROWS AT END OF LIST

Total
Subtotal

Size	Description	Count	Bid Price	Total Bid Price	Filter	Notes
1/2	Type L Hard Copper Tube	24-LF	$ 2.67	$ 64.00	COPPER	10' MIN LENGHTS
1	Type L Hard Copper Tube	92-LF	$ 6.20	$ 570.40	COPPER	10' MIN LENGHTS
1	Type L Hard Copper Tube	1-LF	$ 6.20	$ 6.20	COPPER	10' MIN LENGHTS
2	Type L Hard Copper Tube	101-LF	$ 17.31	$ 1,748.42	COPPER	10' MIN LENGHTS
2	Sch 80 PVC PE Pipe	2-LF	$ 4.42	$ 8.84	PVC	20' MIN LENGHTS
4	Sch 80 PVC PE Pipe	17-LF	$ 13.27	$ 225.53	PVC	20' MIN LENGHTS
10x2' 0"	DI FxF Epoxy Lined/Primer Coat	1	$ 852.44	$ 852.44	DUCTILE	
12x2' 0"	DI FxF Epoxy Lined/Primer Coat	8	$ 1,098.22	$ 8,785.78	DUCTILE	
12x2' 6"	DI FxF Epoxy Lined/Primer Coat	3	$ 1,212.00	$ 3,636.00	DUCTILE	
12x2' 6"	DI FxF Epoxy Lined/Primer Coat ~FLxPE pipe spool	2	$ 877.33	$ 1,754.67	DUCTILE	
12x3' 0"	DI FxF Epoxy Lined/Primer Coat	20	$ 1,325.33	$ 26,506.67	DUCTILE	
12x3' 0"	DI FxF Epoxy Lined/Primer Coat ~FLxPE pipe spool	2	$ 991.11	$ 1,982.22	DUCTILE	
12x4' 0"	DI FxF Epoxy Lined/Primer Coat ~FLxPE spool w/ weep ring	4	$ 1,644.00	$ 6,576.00	DUCTILE	
12x4' 0"	DI FxF Epoxy Lined/Primer Coat ~FLxPE w/ weep ring	3	$ 1,644.00	$ 4,932.00	DUCTILE	
12x4' 6"	DI FxF Epoxy Lined/Primer Coat ~FLxPE pipe spool	2	$ 1,332.00	$ 2,664.00	DUCTILE	
12x5' 6"	DI FxF Epoxy Lined/Primer Coat	2	$ 1,893.33	$ 3,786.67	DUCTILE	
12x6' 0"	DI FxF Epoxy Lined/Primer Coat	1	$ 2,006.22	$ 2,006.22	DUCTILE	
12x6' 6"	DI FxF Epoxy Lined/Primer Coat	2	$ 2,119.56	$ 4,239.11	DUCTILE	
12x8' 0"	DI FxF Epoxy Lined/Primer Coat ~FLxPE spool w/ weep ring	1	$ 2,665.50	$ 2,665.50	DUCTILE	
14x1' 0"	DI FxF Epoxy Lined/Primer Coat ~PExFL pipe spool	1	$ 789.33	$ 789.33	DUCTILE	
14x1' 6"	DI FxF Epoxy Lined/Primer Coat	9	$ 1,412.44	$ 12,712.00	DUCTILE	
14x1' 6"	DI FxF Epoxy Lined/Primer Coat ~PExFL pipe spool	7	$ 936.00	$ 6,552.00	DUCTILE	
14x2' 0"	DI FxF Epoxy Lined/Primer Coat	6	$ 1,559.11	$ 9,354.67	DUCTILE	
14x2' 0"	DI FxF Epoxy Lined/Primer Coat ~FLxPE spool w/ weep ring	2	$ 1,552.50	$ 3,105.00	DUCTILE	
14x2' 0"	DI FxF Epoxy Lined/Primer Coat ~w/ 2" TOL for pressure guage	4	$ 1,810.22	$ 7,240.89	DUCTILE	
14x2' 6"	DI FxF Epoxy Lined/Primer Coat	1	$ 1,705.78	$ 1,705.78	DUCTILE	
14x4' 0"	DI FxF Epoxy Lined/Primer Coat	9	$ 2,148.00	$ 19,332.00	DUCTILE	
16x1' 6"	DI FxF Epoxy Lined/Primer Coat	1	$ 1,652.00	$ 1,652.00	DUCTILE	
16x2' 0"	DI FxF Epoxy Lined/Primer Coat	2	$ 1,819.11	$ 3,638.22	DUCTILE	
16x4' 0"	DI FxF Epoxy Lined/Primer Coat	1	$ 2,484.44	$ 2,484.44	DUCTILE	
16x4' 0"	DI FxF Epoxy Lined/Primer Coat ~FLxPE w/ weep ring	2	$ 2,546.00	$ 5,092.00	DUCTILE	
16x8' 6"	DI FxF Epoxy Lined/Primer Coat	1	$ 3,982.22	$ 3,982.22	DUCTILE	
18x3' 6"	DI FxF Epoxy Lined/Primer Coat	5	$ 2,734.67	$ 13,673.33	DUCTILE	
18x3' 6"	DI FxF Epoxy Lined/Primer Coat ~w/ 2" TOL for pressure guage & 3" tap for air/vacuum valve	3	$ 3,608.00	$ 10,824.00	DUCTILE	
18x4' 0"	DI FxF Epoxy Lined/Primer Coat	2	$ 2,930.67	$ 5,861.33	DUCTILE	
18x6' 6"	DI FxF Epoxy Lined/Primer Coat	5	$ 3,908.89	$ 19,544.44	DUCTILE	
18x7' 0"	DI FxF Epoxy Lined/Primer Coat	2	$ 4,105.33	$ 8,210.67	DUCTILE	
18x10' 6"	DI FxF Epoxy Lined/Primer Coat	1	$ 5,475.11	$ 5,475.11	DUCTILE	
18x12' 6"	DI FxF Epoxy Lined/Primer Coat	3	$ 6,258.22	$ 18,774.67	DUCTILE	
20x1' 6"	DI FxF Epoxy Lined/Primer Coat ~FLxPE spool w/ weep ring	4	$ 2,168.50	$ 8,674.00	DUCTILE	
24x1' 0"	DI FxF Epoxy Lined/Primer Coat ~PExPE	1	$ 643.56	$ 643.56	DUCTILE	
24x1' 6"	DI FxF Epoxy Lined/Primer Coat	4	$ 2,843.56	$ 11,374.22	DUCTILE	
24x1' 6"	DI FxF Epoxy Lined/Primer Coat ~FLxPE	5	$ 1,848.00	$ 9,240.00	DUCTILE	
24x1' 6"	DI FxF Epoxy Lined/Primer Coat ~FLxPE Spool	8	$ 1,848.00	$ 14,784.00	DUCTILE	
24x1' 6"	DI FxF Epoxy Lined/Primer Coat ~w/ 4" tap for air/vacuum valve	1	$ 3,643.56	$ 3,643.56	DUCTILE	
24x2' 0"	DI FxF Epoxy Lined/Primer Coat	3	$ 3,116.00	$ 9,348.00	DUCTILE	
24x2' 0"	DI FxF Epoxy Lined/Primer Coat ~FLxPE	1	$ 2,120.44	$ 2,120.44	DUCTILE	
24x2' 0"	DI FxF Epoxy Lined/Primer Coat ~w/ 4" tap for air/vacuum valve	1	$ 3,916.00	$ 3,916.00	DUCTILE	
24x2' 6"	DI FxF Epoxy Lined/Primer Coat	2	$ 3,389.33	$ 6,778.67	DUCTILE	
24x3' 0"	DI FxF Epoxy Lined/Primer Coat	19	$ 3,661.33	$ 69,565.33	DUCTILE	
24x3' 6"	DI FxF Epoxy Lined/Primer Coat	6	$ 3,933.78	$ 23,602.67	DUCTILE	
24x3' 6"	DI FxF Epoxy Lined/Primer Coat ~PExPE	1	$ 2,006.22	$ 2,006.22	DUCTILE	
24x3' 6"	DI FxF Epoxy Lined/Primer Coat ~w/ 4" tap for air/vacuum valve	1	$ 4,733.78	$ 4,733.78	DUCTILE	
24x4' 0"	DI FxF Epoxy Lined/Primer Coat	5	$ 4,207.11	$ 21,035.56	DUCTILE	
24x5' 0"	DI FxF Epoxy Lined/Primer Coat	1	$ 4,752.00	$ 4,752.00	DUCTILE	
24x5' 6"	DI FxF Epoxy Lined/Primer Coat	1	$ 5,025.33	$ 5,025.33	DUCTILE	
24x5' 6"	DI FxF Epoxy Lined/Primer Coat ~PExPE	1	$ 3,096.89	$ 3,096.89	DUCTILE	
24x6' 0"	DI FxF Epoxy Lined/Primer Coat	1	$ 5,297.33	$ 5,297.33	DUCTILE	
24x6' 6"	DI FxF Epoxy Lined/Primer Coat	2	$ 5,570.22	$ 11,140.44	DUCTILE	
24x7' 0"	DI FxF Epoxy Lined/Primer Coat	1	$ 5,842.67	$ 5,842.67	DUCTILE	
24x13' 6"	DI FxF Epoxy Lined/Primer Coat ~FLxPE	1	$ 8,391.56	$ 8,391.56	DUCTILE	
24x15' 0"	DI FxF Epoxy Lined/Primer Coat	1	$ 10,205.33	$ 10,205.33	DUCTILE	
24x17' 6"	DI FxF Epoxy Lined/Primer Coat ~PExPE	1	$ 9,641.33	$ 9,641.33	DUCTILE	
12	Ductile Iron Pipe Push On CL350	29-LF	$ 78.23	$ 2,268.77	DUCTILE	18' LENGHTS ONLY
14	Ductile Iron Pipe Push On CL350	18-LF	$ 100.17	$ 1,803.00	DUCTILE	18' LENGHTS ONLY
16	Ductile Iron Pipe Push On CL350	30-LF	$ 115.22	$ 3,456.67	DUCTILE	18' LENGHTS ONLY
1/4	Sch 80 CPVC PE Pipe	696-LF	$ 4.70	$ 3,268.17	CPVC	
1/2	Sch 80 CPVC PE Pipe	249-LF	$ 1.38	$ 342.71	CPVC	
3/4	Sch 80 CPVC PE Pipe	179-LF	$ 1.88	$ 336.83	CPVC	
1	Sch 80 CPVC PE Pipe	925-LF	$ 2.75	$ 2,546.24	CPVC	
1	Sch 80 CPVC PE Pipe ~	22-LF	$ 2.75	$ 60.56	CPVC	
1-1/2	Sch 80 CPVC PE Pipe	483-LF	$ 4.66	$ 2,248.81	CPVC	
1-1/2	Sch 80 CPVC PE Pipe ~	23-LF	$ 4.66	$ 107.09	CPVC	
2	Sch 80 CPVC PE Pipe	48-LF	$ 6.45	$ 309.68	CPVC	
2	Sch 80 CPVC PE Pipe ~	0-LF	$ 6.45	$ -	CPVC	
2-1/2	Sch 80 CPVC PE Pipe	28-LF	$ 9.77	$ 273.68	CPVC	
3	Sch 80 CPVC PE Pipe	37-LF	$ 12.13	$ 448.77	CPVC	
3	Sch 80 CPVC PE Pipe ~	19-LF	$ 12.13	$ 230.45	CPVC	
12	Sch 80 CPVC PE Pipe	329-LF	$ 225.34	$ 74,135.86	CPVC	
24	Sch 80 CPVC PE Pipe	132-LF	$ 702.50	$ 92,730.00	CPVC	
1/4	316 SS .065 Tubing	42-LF	$ 5.83	$ 245.00	SMALL BORE	20' LENGHTS PE
1	SS A312 316L Pipe Sch 40 T&C	599-LF	$ 23.39	$ 14,009.94	SMALL BORE	SRL WELDED PLAIN END
1	SS A778 304 Pipe Sch 40 T&C	65-LF	$ 18.52	$ 1,203.94	SMALL BORE	SRL WELDED PLAIN END
12	FxF Epoxy/Primer 90 Ell	8	$ 1,412.40	$ 11,299.20	DUCTILE	
14	FxF Epoxy/Primer 90 Ell	9	$ 1,766.84	$ 15,901.60	DUCTILE	
16	FxF Epoxy/Primer 90 Ell	4	$ 2,168.22	$ 8,672.89	DUCTILE	
18	FxF Epoxy/Primer 90 Ell	9	$ 2,825.78	$ 25,432.00	DUCTILE	
24	FxF Epoxy/Primer 90 Ell	18	$ 5,296.13	$ 95,330.40	DUCTILE	
12	FxF Epoxy/Primer 45 Ell	1	$ 1,254.49	$ 1,254.49	DUCTILE	
12	FxF Epoxy/Primer Tee	11	$ 2,007.38	$ 22,081.16	DUCTILE	
14	FxF Epoxy/Primer Tee	3	$ 2,786.67	$ 8,360.00	DUCTILE	
24	FxF Epoxy/Primer Tee	35	$ 7,353.38	$ 257,368.22	DUCTILE	
12x10	FxF Epoxy/Primer Conc Red	2	$ 1,220.27	$ 2,440.53	DUCTILE	
12x10	FxF Epoxy/Primer Conc Red ~w/ 2" TOL for pressure guage	4	$ 1,531.20	$ 6,124.80	DUCTILE	
14x10	FxF Epoxy/Primer Conc Red ~w/ 2" TOL for pressure guage	3	$ 1,853.87	$ 5,561.60	DUCTILE	
14x12	FxF Epoxy/Primer Conc Red	7	$ 1,438.80	$ 10,071.60	DUCTILE	
16x12	FxF Epoxy/Primer Conc Red ~w/ 2" TOL for pressure guage	1	$ 2,137.42	$ 2,137.42	DUCTILE	
18x12	FxF Epoxy/Primer Conc Red	3	$ 2,053.33	$ 6,160.00	DUCTILE	

18x16	FxF Epoxy/Primer Conc Red	6	$ 2,275.29	$ 13,651.73	DUCTILE		
24x12	FxF Epoxy/Primer Conc Red	4	$ 3,857.33	$ 15,429.33	DUCTILE		
24x18	FxF Epoxy/Primer Conc Red	4	$ 4,090.04	$ 16,360.18	DUCTILE		
24x20	FxF Epoxy/Primer Conc Red	4	$ 4,326.18	$ 17,304.71	DUCTILE		
14	FxF Epoxy/Primer 22-1/2 Ell	8	$ 1,673.96	$ 13,391.64	DUCTILE		
16	FxF Epoxy/Primer 22-1/2 Ell	1	$ 1,863.16	$ 1,863.16	DUCTILE		
14x12	FxF Epoxy/Primer Red Tee	7	$ 2,735.33	$ 19,147.33	DUCTILE		
16x12	FxF Epoxy/Primer Red Tee	1	$ 2,759.78	$ 2,759.78	DUCTILE		
24x12	FxF Epoxy/Primer Red Tee	5	$ 5,198.36	$ 25,991.78	DUCTILE		
24x16	FxF Epoxy/Primer Red Tee	2	$ 5,306.89	$ 10,613.78	DUCTILE		
24x18	FxF Epoxy/Primer Red Tee	3	$ 8,042.71	$ 24,128.13	DUCTILE		
24	MJxMJ Epoxy/Asphalt 45 Ell	2	$ 2,618.00	$ 5,236.00	DUCTILE		
12	MJxMJ Epoxy/Asphalt 90 Ell	3	$ 914.71	$ 2,744.13	DUCTILE		
16	MJxMJ Epoxy/Asphalt 90 Ell	4	$ 1,617.24	$ 6,468.98	DUCTILE		
24	MJxMJ Epoxy/Asphalt 90 Ell	1	$ 3,529.29	$ 3,529.29	DUCTILE		
12	MJxMJ Epoxy/Asphalt Tee	3	$ 1,115.64	$ 3,346.93	DUCTILE		
14	MJxMJ Epoxy/Asphalt Tee	2	$ 1,656.36	$ 3,312.71	DUCTILE		
1/2	Wrot Copper 90 Ell	24	$ 0.53	$ 12.80	COPPER		
1	Wrot Copper 90 Ell	24	$ 2.90	$ 69.60	COPPER		
2	Wrot Copper 90 Ell	22	$ 12.48	$ 274.63	COPPER		
1	Wrot Copper Tee	8	$ 6.72	$ 53.73	COPPER		
2	Wrot Copper Tee	2	$ 22.07	$ 44.13	COPPER		
2x1	304 SS 150# Thd Hex Bushing	15	$ 11.26	$ 168.88	SMALL BORE		
1	316 SS 150# Thd 90 Ell	60	$ 5.89	$ 353.65	SMALL BORE		
1	316 SS 150# Thd Tee	40	$ 7.76	$ 310.59	SMALL BORE		
1	316 SS 150# Thd Union	42	$ 15.25	$ 640.38	SMALL BORE		
1x1/4	316 SS 150# Thd Hex Bushing	42	$ 3.94	$ 165.53	SMALL BORE		
1/4	CPVC Sch 80 90 Ell	78	$ 4.16	$ 324.27	CPVC		
1/2	CPVC Sch 80 90 Ell	64	$ 1.62	$ 103.55	CVPC		
3/4	CPVC Sch 80 90 Ell	10	$ 2.08	$ 20.79	CPVC		
3/4	CPVC Sch 80 90 Ell ~	4	$ 2.08	$ 8.31	CPVC		
1	CPVC Sch 80 90 Ell	176	$ 3.29	$ 579.42	CPVC		
1	CPVC Sch 80 90 Ell ~	4	$ 3.29	$ 13.17	CPVC		
1-1/2	CPVC Sch 80 90 Ell	54	$ 7.96	$ 429.57	CPVC		
1-1/2	CPVC Sch 80 90 Ell ~	8	$ 7.96	$ 63.64	CPVC		
2	CPVC Sch 80 90 Ell	37	$ 9.60	$ 355.03	CPVC		
2-1/2	CPVC Sch 80 90 Ell	38	$ 22.09	$ 839.42	CPVC		
3	CPVC Sch 80 90 Ell	21	$ 25.02	$ 525.47	CPVC		
12	CPVC Sch 80 90 Ell	12	$ 2,152.85	$ 25,834.25	CPVC	806-120CF	
3	CPVC Sch 80 45 Ell	6	$ 27.11	$ 162.67	CPVC		
12	CPVC Sch 80 45 Ell	2	$ 1,275.30	$ 2,550.61	CPVC	817-120CF	
1/4	CPVC Sch 80 Tee	1	$ 4.56	$ 4.56	CPVC		
1/2	CPVC Sch 80 Tee	16	$ 3.81	$ 60.94	CPVC		
3/4	CPVC Sch 80 Tee	5	$ 3.88	$ 19.38	CPVC		
3/4	CPVC Sch 80 Tee ~	1	$ 3.88	$ 3.88	CPVC		
1	CPVC Sch 80 Tee	26	$ 4.75	$ 123.57	CPVC		
1	CPVC Sch 80 Tee ~	2	$ 4.75	$ 9.51	CPVC		
1-1/2	CPVC Sch 80 Tee	15	$ 11.48	$ 172.25	CPVC		
1-1/2	CPVC Sch 80 Tee ~	2	$ 11.48	$ 22.97	CPVC		
2	CPVC Sch 80 Tee	17	$ 12.78	$ 217.18	CPVC		
2-1/2	CPVC Sch 80 Tee	7	$ 32.53	$ 227.70	CPVC		
3	CPVC Sch 80 Tee	2	$ 32.53	$ 65.06	CPVC		
12	CPVC Sch 80 Tee	9	$ 2,152.62	$ 19,373.56	CPVC		
12	CPVC Sch 80 Coupling	9	$ 896.70	$ 8,070.27	CPVC	829-120CF	
24	CPVC Sch 80 Coupling	4	$ 6,524.75	$ 26,099.01	CPVC	829-240CF	
1/4	CPVC Sch 80 Union w/Viton O-Ring	8	$ 11.08	$ 88.63	CPVC		
1/2	CPVC Sch 80 Union w/Viton O-Ring	12	$ 7.40	$ 88.85	CPVC		
3/4	CPVC Sch 80 Union w/Viton O-Ring	5	$ 7.70	$ 38.48	CPVC		
1	CPVC Sch 80 Union w/Viton O-Ring	20	$ 9.24	$ 184.72	CPVC		
1x1/2	CPVC Sch 80 Reducer Coupling	1	$ 6.40	$ 6.40	CPVC		
1-1/2x3/4	CPVC Sch 80 Reducer Coupling	1	$ 14.55	$ 14.55	CPVC		
1-1/2x1	CPVC Sch 80 Reducer Coupling	11	$ 14.55	$ 160.06	CPVC		
2x1/2	CPVC Sch 80 Reducer Coupling	1	$ 19.24	$ 19.24	CPVC		
2x1	CPVC Sch 80 Reducer Coupling	3	$ 19.24	$ 57.71	CPVC		
2x1-1/2	CPVC Sch 80 Reducer Coupling	4	$ 19.24	$ 76.94	CPVC		
2-1/2x1-1/2	CPVC Sch 80 Reducer Coupling	3	$ 21.91	$ 65.73	CPVC		
3x1	CPVC Sch 80 Reducer Coupling ~	2	$ 54.19	$ 108.38	CPVC		
3x2	CPVC Sch 80 Reducer Coupling	7	$ 44.27	$ 309.89	CPVC		
14x12	CPVC Sch 80 Reducer Coupling	2	$ 1,199.06	$ 2,398.11	CPVC	829-702CF	
24x12	CPVC Sch 80 Reducer Coupling	4	$ 7,767.11	$ 31,068.45	CPVC	829-912CF	
3	CPVC Sch 80 Plug ~	2	$ 80.48	$ 160.97	CPVC	849-030CF	
1x1/2	CPVC Sch 80 Reducing Tee	1	$ 9.80	$ 9.80	CPVC		
2-1/2x1-1/2	CPVC Sch 80 Reducing Tee	4	$ 28.35	$ 113.39	CPVC		
24x12	CPVC Sch 80 Reducing Tee	20	$ 14,842.28	$ 296,845.62	CPVC	801-912CF	
3	CPVC Sch 80 Grooved Cplg Adapter	1	$ 32.11	$ 32.11	CPVC	833-030C	
1-1/2	CPVC Sch 80 Union w/EPDM O-Ring	2	$ 22.48	$ 44.97	CPVC		
2-1/2	CPVC Sch 80 Union w/EPDM O-Ring	1	$ 61.71	$ 61.71	CPVC		
2	PVC Sch 80 90 Ell	2	$ 3.33	$ 6.66	PVC		
4	PVC Sch 80 90 Ell	2	$ 13.28	$ 26.56	PVC		
4	PVC Sch 80 Tee	1	$ 18.62	$ 18.62	PVC		
1	SS A774 304 Sch 40 THD 90 SR Ell	15	$ 5.06	$ 75.88	SMALL BORE		
1x1/2	SS A774 304 Sch 40 THD Bushing	30	$ 3.45	$ 103.41	SMALL BORE		
3	Combination Air Relief/Vacuum Va	5	$ 7,013.98	$ 35,069.89	VALVE - ARV	D26SSNS03IN	
3	Combination Air Relief/Vacuum Va ~w/ throttling device	1	$ 7,013.98	$ 7,013.98	VALVE - ARV	D26SSNS03IN	
4	Combination Air Relief/Vacuum Va	1	$ 13,584.95	$ 13,584.95	VALVE - ARV	D26SSNS04IN	
12	Flg General Purpose BFV w/Hand W	2	$ 1,882.42	$ 3,764.84	VALVE - BUTTERFLY		
16	Flg General Purpose BFV w/Hand W	1	$ 2,860.44	$ 2,860.44	VALVE - BUTTERFLY		
18	Flg General Purpose BFV w/Hand W	6	$ 3,430.77	$ 20,584.62	VALVE - BUTTERFLY		
18	Flg General Purpose BFV w/Hand W ~BFV-507	1	$ 3,430.77	$ 3,430.77	VALVE - BUTTERFLY		
18	Flg General Purpose BFV w/Hand W ~BFV-509	1	$ 3,430.77	$ 3,430.77	VALVE - BUTTERFLY		
18	Flg General Purpose BFV w/Hand W ~BFV-RW-103	1	$ 3,430.77	$ 3,430.77	VALVE - BUTTERFLY		
18	Flg General Purpose BFV w/Hand W ~BFV-RW-202	1	$ 3,430.77	$ 3,430.77	VALVE - BUTTERFLY		
18	Flg General Purpose BFV w/Hand W ~BFV-RW-302	1	$ 3,430.77	$ 3,430.77	VALVE - BUTTERFLY		
24	Flg General Purpose BFV w/Hand W ~**BFV-1	1	$ 6,116.48	$ 6,116.48	VALVE - BUTTERFLY		
24	Flg General Purpose BFV w/Hand W ~**BFV-2	1	$ 6,116.48	$ 6,116.48	VALVE - BUTTERFLY		
24	Flg General Purpose BFV w/Hand W ~**BFV-3	1	$ 6,116.48	$ 6,116.48	VALVE - BUTTERFLY		
24	Flg General Purpose BFV w/Hand W ~BFV-508	1	$ 6,116.48	$ 6,116.48	VALVE - BUTTERFLY		
24	Flg General Purpose BFV w/Hand W ~BFV-RW-011	1	$ 6,116.48	$ 6,116.48	VALVE - BUTTERFLY		
12	Flg Gen Purpose BFV W/Pneum ~BFV-102	1	$ 2,747.25	$ 2,747.25	VALVE - BUTTERFLY		
12	Flg Gen Purpose BFV W/Pneum ~BFV-202	1	$ 2,747.25	$ 2,747.25	VALVE - BUTTERFLY		
12	Flg Gen Purpose BFV W/Pneum ~BFV-302	1	$ 2,747.25	$ 2,747.25	VALVE - BUTTERFLY		
12	Flg Gen Purpose BFV W/Pneum ~BFV-402	1	$ 2,747.25	$ 2,747.25	VALVE - BUTTERFLY		
2	CPVC Butterfly Valve w/Gear Op ~BFV-513, Solvent Weld, w/ Pneumatic Actuator	1	$ 678.66	$ 678.66	VALVE - CPVC BUTTERFLY	EPDM, PNEUMATIC SPRING-RETURN	
1/2	Ball Valve Thd SST	34	$ 9.36	$ 318.22	VALVE - BALL		304
1	Ball Valve Thd SST	79	$ 17.47	$ 1,380.28	VALVE - BALL		304

2	PVC True Union Solv Weld Ball	2	$ 110.74	$ 221.47	VALVE - PVC BALL
4	PVC True Union Solv Weld Ball	1	$ 454.14	$ 454.14	VALVE - PVC BALL
1	CPVC Solvent Weld Ball Valve	30	$ 39.96	$ 1,198.68	VALVE - CPVC BALL
1/2	CPVC True Union Solv Weld Ball	29	$ 56.03	$ 1,624.96	VALVE - CPVC BALL
1/2	CPVC True Union Solv Weld Ball ~BAV-738 - w/ Pneumatic Actuator	1	$ 392.47	$ 392.47	VALVE - CPVC BALL
1/2	CPVC True Union Solv Weld Ball ~BAV-739 - w/ Pneumatic Actuator	1	$ 392.47	$ 392.47	VALVE - CPVC BALL
3/4	CPVC True Union Solv Weld Ball	5	$ 70.58	$ 352.91	VALVE - CPVC BALL
1	CPVC True Union Solv Weld Ball	19	$ 84.02	$ 1,596.42	VALVE - CPVC BALL
1	CPVC True Union Solv Weld Ball ~	2	$ 84.02	$ 168.04	VALVE - CPVC BALL
1	CPVC True Union Solv Weld Ball ~BAV-736 - w/ Pneumatic Actuator	1	$ 441.27	$ 441.27	VALVE - CPVC BALL
1	CPVC True Union Solv Weld Ball ~BAV-737 - w/ Pneumatic Actuator	1	$ 441.27	$ 441.27	VALVE - CPVC BALL
1	CPVC True Union Solv Weld Ball ~BAV-739 - w/ Pneumatic Actuator	1	$ 441.27	$ 441.27	VALVE - CPVC BALL
1-1/2	CPVC True Union Solv Weld Ball	12	$ 141.07	$ 1,692.79	VALVE - CPVC BALL
1-1/2	CPVC True Union Solv Weld Ball ~	4	$ 141.07	$ 564.26	VALVE - CPVC BALL
2	CPVC True Union Solv Weld Ball	30	$ 188.68	$ 5,660.44	VALVE - CPVC BALL
2	CPVC True Union Solv Weld Ball ~w/ MOV - BAV-SD-101	1	$ 623.03	$ 623.03	VALVE - CPVC BALL
2	CPVC True Union Solv Weld Ball ~w/ MOV - BAV-SD-201	1	$ 623.03	$ 623.03	VALVE - CPVC BALL
2	CPVC True Union Solv Weld Ball ~w/ MOV - BAV-SD-301	1	$ 623.03	$ 623.03	VALVE - CPVC BALL
2-1/2	CPVC True Union Solv Weld Ball	17	$ 312.32	$ 5,309.42	VALVE - CPVC BALL
3	CPVC True Union Solv Weld Ball	2	$ 520.56	$ 1,041.12	VALVE - CPVC BALL
1/2	Sweat Ball Valve	12	$ 4.48	$ 53.80	VALVE - BALL
1	Sweat Ball Valve	14	$ 11.36	$ 159.03	VALVE - BALL
2	Sweat Ball Valve	1	$ 38.47	$ 38.47	VALVE - BALL
12	Flg Swing Check Valve	1	$ 5,626.37	$ 5,626.37	VALVE - CHECK
18	Flg Swing Check Valve ~CKS-RW-102	1	$ 14,358.24	$ 14,358.24	VALVE - CHECK
18	Flg Swing Check Valve ~CKS-RW-201	1	$ 14,358.24	$ 14,358.24	VALVE - CHECK
18	Flg Swing Check Valve ~CKS-RW-301	1	$ 14,358.24	$ 14,358.24	VALVE - CHECK
2	150# Flanged Check Valve	1	$ 884.62	$ 884.62	VALVE - CHECK
2	Sweat Check Valve	1	$ 30.56	$ 30.56	VALVE - CHECK
1/2	CPVC Solvent Weld Check Valve	8	$ 75.09	$ 600.70	VALVE - CPVC CHECK
3/4	CPVC Solvent Weld Check Valve	1	$ 89.88	$ 89.88	VALVE - CPVC CHECK
1	CPVC Solvent Weld Check Valve	3	$ 106.04	$ 318.13	VALVE - CPVC CHECK
1-1/2	CPVC Solvent Weld Check Valve	5	$ 182.64	$ 913.19	VALVE - CPVC CHECK
1-1/2	CPVC Solvent Weld Check Valve ~	1	$ 182.64	$ 182.64	VALVE - CPVC CHECK
3	CPVC Solvent Weld Check Valve	1	$ 731.89	$ 731.89	VALVE - CPVC CHECK
3	150# AWWA Flg Plug Valve w/Gear	6	$ 676.92	$ 4,061.54	VALVE - PLUG
4	150# AWWA Flg Plug Valve w/Gear	1	$ 848.35	$ 848.35	VALVE - PLUG
18	150# AWWA Flg Plug Valve w/Gear ~009	1	$ 9,592.31	$ 9,592.31	VALVE - PLUG
18	150# AWWA Flg Plug Valve w/Gear ~BFV-RW-010	1	$ 9,592.31	$ 9,592.31	VALVE - PLUG
3/4	150# Flanged Diaphragm Valve	1	$ 240.81	$ 240.81	VALVE -DIAPHRAGM
1/2	CPVC Solvent Weld Diaphragm Valv	1	$ 237.62	$ 237.62	CPVC - DIAPHRAGM VALVE
1/2	CPVC True Union Solv Weld Diaphr	2	$ 237.62	$ 475.23	CPVC - DIAPHRAGM VALVE
1-1/2	CPVC T/U Solv Weld Diaphragm Val ~PRV	6	$ 472.01	$ 2,832.07	CPVC - DIAPHRAGM VALVE
3	307B HDG Bolt 1/8" Neo Gskt Kit	18	$ 7.78	$ 139.96	BNG
10	307B HDG Bolt 1/8" Neo Gskt Kit	10	$ 48.88	$ 488.82	BNG
12	307B HDG Bolt 1/8" Neo Gskt Kit	149	$ 55.46	$ 8,263.36	BNG
14	307B HDG Bolt 1/8" Neo Gskt Kit	78	$ 155.29	$ 12,112.94	BNG
16	307B HDG Bolt 1/8" Neo Gskt Kit	25	$ 204.71	$ 5,117.65	BNG
18	307B HDG Bolt 1/8" Neo Gskt Kit	76	$ 272.94	$ 20,743.53	BNG
20	307B HDG Bolt 1/8" Neo Gskt Kit	8	$ 340.00	$ 2,720.00	BNG
24	307B HDG Bolt 1/8" Neo Gskt Kit	159	$ 400.00	$ 63,600.00	BNG
1	316 SST Bolt 1/8" Neo Gskt Kit	3	$ 6.35	$ 19.06	BNG
2	316 SST Bolt 1/8" Neo Gskt Kit	3	$ 6.71	$ 20.12	BNG
4	316 SST Bolt 1/8" Neo Gskt Kit	5	$ 17.88	$ 89.41	BNG
12	316 SST Bolt 1/8" Neo Gskt Kit	6	$ 84.71	$ 508.24	BNG
18	316 SST Bolt 1/8" Neo Gskt Kit	3	$ 264.71	$ 794.12	BNG
24	316 SST Bolt 1/8" Neo Gskt Kit	6	$ 541.18	$ 3,247.06	BNG
12	316 SST Bolt & Isolation Kit	1	$ 194.12	$ 194.12	BNG
24	316 SST Bolt & Isolation Kit	4	$ 864.71	$ 3,458.82	BNG
14	307B CS Bolt & Isolation Kit	4	$ 249.41	$ 997.65	BNG
1	150# Sch 80 CPVC SW Flange	3	$ 8.08	$ 24.24	CPVC
4	150# Sch 80 CPVC SW Flange	2	$ 38.78	$ 77.55	CPVC
1/2	150# Sch 80 CPVC VS PR Flange	6	$ 7.28	$ 43.69	CPVC
1	150# Sch 80 CPVC VS PR Flange	2	$ 8.12	$ 16.25	CPVC
1	150# Sch 80 CPVC VS PR Flange ~	2	$ 8.12	$ 16.25	CPVC
1-1/2	150# Sch 80 CPVC VS PR Flange	6	$ 11.02	$ 66.13	CPVC
2	150# Sch 80 CPVC VS PR Flange	6	$ 13.34	$ 80.02	CPVC
2-1/2	150# Sch 80 CPVC VS PR Flange	6	$ 27.64	$ 165.84	CPVC
3	150# Sch 80 CPVC VS PR Flange	3	$ 28.94	$ 86.83	CPVC
12	150# Sch 80 CPVC VS PR Flange	36	$ 2,137.47	$ 76,948.99	CPVC
24	150# Sch 80 CPVC VS PR Flange	8	$ 7,021.56	$ 56,172.49	CPVC
2	150# Sch 80 PVC Solv Weld Flange	2	$ 8.51	$ 17.01	PVC
24	Ductile Iron C110 Blind Flange	4	$ 4,474.80	$ 17,899.20	DUCTILE
8	304 SS 150# Slip-On Flange	6	$ 527.44	$ 3,164.61	SST
12	304 SS 150# Slip-On Flange	10	$ 1,209.60	$ 12,096.00	SST
2	125# Cast Copper Flange	1	$ 165.97	$ 165.97	COPPER
1/2	PTFE Fractional Gasket	4	$ 10.41	$ 41.65	BNG
1	Standard PTFE Gasket	4	$ 10.59	$ 42.35	BNG
1	Standard PTFE Gasket ~	2	$ 11.18	$ 22.35	BNG
1-1/2	Standard PTFE Gasket	2	$ 11.76	$ 23.53	BNG
1-1/2	Standard PTFE Gasket ~	4	$ 11.76	$ 47.06	BNG
2	Standard PTFE Gasket	4	$ 14.71	$ 58.82	BNG
2-1/2	Standard PTFE Gasket	6	$ 17.65	$ 105.88	BNG
12	SST Pipe Saddle Roller Support ~See detail 202 sheet M-7.02	6	$ 1,131.88	$ 6,791.29	SUPPORT
18	SST Strap for Concrete Saddle	20	$ 194.19	$ 3,883.87	SUPPORT
24	SST Strap for Concrete Saddle	7	$ 260.70	$ 1,824.89	SUPPORT
2-1/2	SST Vertical Pipe Stanchion	3	$ 175.65	$ 526.94	SUPPORT
NA	4.5' x 4.5' SST Panel	6	$ 5,691.40	$ 34,148.39	SUPPORT
18	P620 - Galv 90/Tee Pipe Supt Bol ~Refer to Detail 505, Sheet M-7.05, and M-1.04 keyed note 17	9	$ 1,826.45	$ 16,438.06	SUPPORT
24	P620 - Galv 90/Tee Pipe Supt Bol	2	$ 1,826.45	$ 3,652.90	SUPPORT
24	P620 - Galv 90/Tee Pipe Supt Bol ~Refer to detail 303 sheet M-7.03, and M-1.05 keyed note 17	1	$ 697.74	$ 697.74	SUPPORT
12	P697 - SST Air Pipe Sliding Supt ~Refer to sheet M-7.02, detail 202	16	$ 1,131.88	$ 18,110.11	SUPPORT
18	P602 - Galv Concrete Pipe Supt	2	$ 219.78	$ 439.57	SUPPORT
24	P602 - Galv Concrete Pipe Supt	3	$ 215.32	$ 645.97	SUPPORT
24	P602 - SST Concrete Pipe Supt	1	$ 260.70	$ 260.70	SUPPORT
1	P618 Galv Floor Pipe Supt ~Refer to detail 702 sheet M-7.07	8	$ 43.60	$ 348.82	SUPPORT
1/2	P618 SST Floor Pipe Supt ~Floor Support - 702	8	$ 28.12	$ 224.95	SUPPORT
1	P618 SST Floor Pipe Supt ~Floor Support - 702	3	$ 85.86	$ 257.58	SUPPORT
1-1/2	P618 SST Floor Pipe Supt ~Floor Pipe Support - 702	8	$ 50.27	$ 402.15	SUPPORT
2	P618 SST Floor Pipe Supt ~Floor Pipe Support - 702	3	$ 97.31	$ 291.94	SUPPORT
2-1/2	P618 SST Floor Pipe Supt	2	$ 65.65	$ 131.29	SUPPORT
2-1/2	P618 SST Floor Pipe Supt ~Floor Support - 702	5	$ 65.65	$ 328.23	SUPPORT
1/2	P660 SST Flush Mount Pipe Supt	69	$ 65.05	$ 4,488.71	SUPPORT
1/2	P660 SST Flush Mount Pipe Supt ~Flush Mount - 203	6	$ 65.05	$ 390.32	SUPPORT
1	P660 SST Flush Mount Pipe Supt	146	$ 64.78	$ 9,458.60	SUPPORT

1	P660 SST Flush Mount Pipe Supt ~For three 1" lines	2	$ 64.78	$ 129.57	SUPPORT	
1	P660 SST Flush Mount Pipe Supt ~One Support for six 1" lines	13	$ 64.78	$ 842.20	SUPPORT	
1	P660 SST Flush Mount Pipe Supt ~One Support for three 1" lines	1	$ 64.78	$ 64.78	SUPPORT	
1-1/2	P660 SST Flush Mount Pipe Supt ~Single support w/ 2 straps - one 1 1/2", & one 1/4"	2	$ 97.58	$ 195.16	SUPPORT	
1-1/2	P660 SST Flush Mount Pipe Supt ~Single support w/ 3 straps - one 1 1/2", one 3/4", & one 1/4"	3	$ 135.05	$ 405.16	SUPPORT	
1-1/2	P660 SST Flush Mount Pipe Supt ~Single support w/ 4 straps - one 1 1/2", one 3/4", one 1/2", & one 1/4"	3	$ 163.17	$ 489.52	SUPPORT	
1-1/2	P660 SST Flush Mount Pipe Supt ~Single support w/ 5 straps - two 1 1/2", one 3/4", one 1/2", & one 1/4"	6	$ 195.70	$ 1,174.19	SUPPORT	
1-1/2	P660 SST Flush Mount Pipe Supt ~Single support w/ 6 straps - three 1 1/2", one 3/4", one 1/2", & one 1/4"	2	$ 228.28	$ 456.56	SUPPORT	
2	P660 SST Flush Mount Pipe Supt ~Detail -203 Flush Mount Support	9	$ 85.75	$ 771.77	SUPPORT	
2	P660 SST Flush Mount Pipe Supt ~Pipe Support - 506	12	$ 85.75	$ 1,029.03	SUPPORT	
12	P662 Galv Pipe Supt for One Vert	2	$ 249.95	$ 499.89	SUPPORT	
1/2	P618 Galv Floor Pipe Supt ~Refer to Sheet M-1.24 Keyed Note 19	6	$ 28.12	$ 168.71	SUPPORT	
2	P618 Galv Floor Pipe Supt	12	$ 48.82	$ 585.81	SUPPORT	
12	P658 - Galv Wall Bracket	16	$ 358.28	$ 5,732.47	SUPPORT	
12	P658 - Galv Wall Bracket ~Refer to sheet M-7.05,detail 504	6	$ 358.28	$ 2,149.68	SUPPORT	
14	P658 - SST Wall Bracket ~Refer to sheet M-7.05, detail 504	16	$ 1,074.89	$ 17,198.28	SUPPORT	
3/4	P664 SST Pipe Supt - Wall Strap	11	$ 23.12	$ 254.30	SUPPORT	
1	P664 SST Pipe Supt - Wall Strap ~Wall Strap - 203	10	$ 17.04	$ 170.43	SUPPORT	
2	P664 SST Pipe Supt - Wall Strap	5	$ 38.01	$ 190.05	SUPPORT	
NA	P616-SST Vertical Pipe Supt	6	$ 1,103.06	$ 6,618.39	SUPPORT	
18	P624 - 2' Galv Adj Pipe Support	3	$ 1,393.76	$ 4,181.29	SUPPORT	
24	P624 - 2' Galv Adj Pipe Support	2	$ 1,529.03	$ 3,058.06	SUPPORT	
24	P624 - 4' Galv Adj Pipe Support	9	$ 1,529.03	$ 13,761.29	SUPPORT	
12	P630 - Galv Pipe Hanger @ Metal	4	$ 204.52	$ 818.06	SUPPORT	
14	P630 - Galv Pipe Hanger @ Metal	4	$ 259.73	$ 1,038.92	SUPPORT	
16	P630 - Galv Pipe Hanger @ Metal	2	$ 282.96	$ 565.91	SUPPORT	
1/2	6' SST Supt Post w/Chnl	13	$ 65.05	$ 845.70	SUPPORT	
3/4	6' SST Supt Post w/Chnl	5	$ 70.86	$ 354.30	SUPPORT	
1	6' SST Supt Post w/Chnl	3	$ 64.78	$ 194.35	SUPPORT	
1-1/2	6' SST Supt Post w/Chnl	11	$ 69.52	$ 764.68	SUPPORT	
1-1/2	6' SST Supt Post w/Chnl ~	5	$ 69.52	$ 347.58	SUPPORT	
12	D-205 '4' SST Adjustable Pipe Su	2	$ 604.57	$ 1,209.14	SUPPORT	
14	D-205 '2' Galv Adjustable Pipe S	4	$ 861.99	$ 3,447.96	SUPPORT	
12	D-204 'SST Pipe Hanger	13	$ 478.17	$ 6,216.24	SUPPORT	
1	D-307 'SST Extended Mount Unistr	22	$ 82.26	$ 1,809.68	SUPPORT	
24	#260 Galv Clevis Hanger	9	$ 600.32	$ 5,402.90	SUPPORT	
2	Wrot Copper Coupling	1	$ 6.27	$ 6.27	COPPER	
1/4	CPVC Sch 80 Coupling	20	$ 4.42	$ 88.31	CPVC	
1/2	CPVC Sch 80 Coupling	5	$ 1.72	$ 8.60	CPVC	
3/4	CPVC Sch 80 Coupling	6	$ 2.40	$ 14.43	CPVC	
1	CPVC Sch 80 Coupling	18	$ 3.24	$ 58.25	CPVC	
1-1/2	CPVC Sch 40 Coupling	15	$ 6.09	$ 91.35	CPVC	
12	CPVC Sch 80 Coupling	3	$ 896.70	$ 2,690.09	CPVC	829-120CF
3	Victaulic Style 775 PVC Coupling	1	$ 70.59	$ 70.59	PVC	
12	Proprietary Restraint Joint	31	$ 1,676.90	$ 51,984.00	DUCTILE	18' LENGHTS ONLY
14	Proprietary Restraint Joint	7	$ 2,300.13	$ 16,100.90	DUCTILE	18' LENGHTS ONLY
16	Proprietary Restraint Joint	12	$ 2,562.39	$ 30,748.65	DUCTILE	18' LENGHTS ONLY
24	Proprietary Restraint Joint	6	$ 4,592.71	$ 27,556.26	DUCTILE	18' LENGHTS ONLY
14	Flex Coupling Rest (PE x PE)	4	$ 900.16	$ 3,600.63	COUPLING	FORD RCDD
18	Flex Coupling Rest (PE x PE)	10	$ 1,482.43	$ 14,824.27	COUPLING	FORD RCDD
24	Flex Coupling Rest (PE x PE)	7	$ 2,144.37	$ 15,010.60	COUPLING	FORD RCDD
1/2x1-1/2	304 SS Sch 40 Nipple TxT	30	$ 1.61	$ 48.35	SMALL BORE	
1/2x2	304 SS Sch 40 Nipple TxT	22	$ 1.93	$ 42.45	SMALL BORE	
1x2	304 SS Sch 40 Nipple TxT	30	$ 2.96	$ 88.94	SMALL BORE	
1x3	304 SS Sch 40 Nipple TxT	15	$ 4.12	$ 61.76	SMALL BORE	
1	TPRV PVC Pressure Relief Valve	2	$ 653.85	$ 1,307.69	VALVE - PRV	
2	Flanged PRV for Water ~PRV	2	$ 983.52	$ 1,967.03	VALVE - PRV	
10	FxF SST/Rubber Exp Joint Restrai	2	$ 2,943.21	$ 5,886.42	EXPANSION	
12	FxF SST/Rubber Exp Joint Restrai	5	$ 3,280.24	$ 16,401.22	EXPANSION	
12	FxF SST/Rubber Exp Joint Restrai ~Refer to sheet M-7.03, detail 301, 304 SST	5	$ 3,280.24	$ 16,401.22	EXPANSION	
1	Link Seal ~1ft Length	3	$ 14.00	$ 42.00	PENETRATIONS	4 - LS300C
1-1/2	Link Seal ~1ft Long	1	$ 55.28	$ 55.28	PENETRATIONS	5 - LS360C
12	Link Seal	44	$ 176.89	$ 7,783.11	PENETRATIONS	16 - LS400C
14	Link Seal	4	$ 102.83	$ 411.33	PENETRATIONS	15 - LS325C
18	Link Seal ~1.5ft Length	3	$ 130.26	$ 390.77	PENETRATIONS	19 - LS325C
28	Link Seal ~1ft length	8	$ 578.00	$ 4,624.00	PENETRATIONS	30 - LS575C
1/2	Gastite Quick Connect Valve	15	$ 294.12	$ 4,411.76	VALVE - QUICK CONNECT	
1/2	PRV SWPressure Regulator Valve	2	$ 84.27	$ 168.54	VALVE - PRESSURE REGULATOR	
1	PRV SWPressure Regulator Valve	3	$ 393.26	$ 1,179.78	VALVE - PRESSURE REGULATOR	
			$ 555,106.68	**$ 2,721,270.50**		

Company: **Duncan Bolts**
Jobname: **Chandler RWIF GMP**
Pricing Due: **3/25/22 5:00 P.M.**
DO NOT INSERT OR DELETE ROWS
IF NEW ROWS ARE NEEDED, USE ROWS AT END OF LIST

Total
Subtotal

Size	Description	Count	Bid Price	Total Bid Price	Filter	Notes
3	307B HDG Bolt 1/8" Neo Gskt Kit	18	$ 7.00	$ 126.00	BNG	
10	307B HDG Bolt 1/8" Neo Gskt Kit	10	$ 55.00	$ 550.00	BNG	
12	307B HDG Bolt 1/8" Neo Gskt Kit	149	$ 57.00	$ 8,493.00	BNG	
14	307B HDG Bolt 1/8" Neo Gskt Kit	78	$ 69.00	$ 5,382.00	BNG	
16	307B HDG Bolt 1/8" Neo Gskt Kit	25	$ 92.00	$ 2,300.00	BNG	
18	307B HDG Bolt 1/8" Neo Gskt Kit	76	$ 133.00	$ 10,108.00	BNG	
20	307B HDG Bolt 1/8" Neo Gskt Kit	8	$ 165.00	$ 1,320.00	BNG	
24	307B HDG Bolt 1/8" Neo Gskt Kit	159	$ 219.00	$ 34,821.00	BNG	
1	316 SST Bolt 1/8" Neo Gskt Kit	3	$ 7.00	$ 21.00	BNG	
2	316 SST Bolt 1/8" Neo Gskt Kit	3	$ 15.00	$ 45.00	BNG	
4	316 SST Bolt 1/8" Neo Gskt Kit	5	$ 29.00	$ 145.00	BNG	
12	316 SST Bolt 1/8" Neo Gskt Kit	6	$ 89.00	$ 534.00	BNG	
18	316 SST Bolt 1/8" Neo Gskt Kit	3	$ 313.00	$ 939.00	BNG	
24	316 SST Bolt 1/8" Neo Gskt Kit	6	$ 529.00	$ 3,174.00	BNG	
12	316 SST Bolt & Isolation Kit	1	$ 187.00	$ 187.00	BNG	
24	316 SST Bolt & Isolation Kit	4	$ 740.00	$ 2,960.00	BNG	
14	307B CS Bolt & Isolation Kit	4	$ 175.00	$ 700.00	BNG	
1/2	PTFE Fractional Gasket	4	$ -	$ -	BNG	
1	Standard PTFE Gasket	4	$ 4.00	$ 16.00	BNG	
1	Standard PTFE Gasket ~	2	$ 4.00	$ 8.00	BNG	
1-1/2	Standard PTFE Gasket	2	$ 6.00	$ 12.00	BNG	
1-1/2	Standard PTFE Gasket ~	4	$ 6.00	$ 24.00	BNG	
2	Standard PTFE Gasket	4	$ 8.00	$ 32.00	BNG	
2-1/2	Standard PTFE Gasket	6	$ 11.00	$ 66.00	BNG	

Company: **Fortiline**
Jobname: **Chandler RWIF GMP**
Pricing Due: **3/25/22 5:00 P.M.**
DO NOT INSERT OR DELETE ROWS
IF NEW ROWS ARE NEEDED, USE ROWS AT END OF LIST

Total
Subtotal

Size	Description	Count	Bid Price	Total Bid Price	Filter	Notes
1/2	Type K Hard Copper Tube	24-LF	$ 3.26	$ 78.24	COPPER	
1	Type K Hard Copper Tube	92-LF	$ 7.74	$ 712.08	COPPER	
1	Type K Hard Copper Tube	1-LF	$ 7.74	$ 7.74	COPPER	
2	Type K Hard Copper Tube	101-LF	$ 19.04	$ 1,923.04	COPPER	
2	Sch 80 PVC PE Pipe	2-LF	$ 3.88	$ 7.76	PVC	
4	Sch 80 PVC PE Pipe	17-LF	$ 11.64	$ 197.88	PVC	
10x2' 0"	DI FxF Epoxy Lined/Primer Coat	1	$ 880.00	$ 880.00	DUCTILE SPOOL	401 Lined / Primed -
12x2' 0"	DI FxF Epoxy Lined/Primer Coat	8	$ 1,136.00	$ 9,088.00	DUCTILE SPOOL	401 Lined / Primed -
12x2' 6"	DI FxF Epoxy Lined/Primer Coat	3	$ 1,255.00	$ 3,765.00	DUCTILE SPOOL	401 Lined / Primed -
12x2' 6"	DI FxF Epoxy Lined/Primer Coat	2	$ 1,255.00	$ 2,510.00	DUCTILE SPOOL	401 Lined / Primed -
12x3' 0"	DI FxF Epoxy Lined/Primer Coat	20	$ 1,372.00	$ 27,440.00	DUCTILE SPOOL	401 Lined / Primed -
12x3' 0"	DI FxF Epoxy Lined/Primer Coat	2	$ 1,372.00	$ 2,744.00	DUCTILE SPOOL	401 Lined / Primed -
12x4' 0"	DI FxF Epoxy Lined/Primer Coat spool w/ weep ring	4	$ 1,859.00	$ 7,436.00	DUCTILE SPOOL	401 Lined / Primed -
12x4' 0"	DI FxF Epoxy Lined/Primer Coat w/ weep ring	3	$ 1,859.00	$ 5,577.00	DUCTILE SPOOL	401 Lined / Primed -
12x4' 6"	DI FxF Epoxy Lined/Primer Coat	2	$ 1,725.00	$ 3,450.00	DUCTILE SPOOL	401 Lined / Primed -
12x5' 6"	DI FxF Epoxy Lined/Primer Coat	2	$ 1,960.00	$ 3,920.00	DUCTILE SPOOL	401 Lined / Primed -
12x6' 0"	DI FxF Epoxy Lined/Primer Coat	1	$ 2,078.00	$ 2,078.00	DUCTILE SPOOL	401 Lined / Primed -
12x6' 6"	DI FxF Epoxy Lined/Primer Coat	2	$ 2,196.00	$ 4,392.00	DUCTILE SPOOL	401 Lined / Primed -
12x8' 0"	DI FxF Epoxy Lined/Primer Coat spool w/ weep ring	1	$ 2,801.00	$ 2,801.00	DUCTILE SPOOL	401 Lined / Primed -
14x1' 0"	DI FxF Epoxy Lined/Primer Coat	1	$ 1,308.00	$ 1,308.00	DUCTILE SPOOL	401 Lined / Primed -
14x1' 6"	DI FxF Epoxy Lined/Primer Coat	9	$ 1,460.00	$ 13,140.00	DUCTILE SPOOL	401 Lined / Primed -
14x1' 6"	DI FxF Epoxy Lined/Primer Coat pipe spool	7	$ 1,460.00	$ 10,220.00	DUCTILE SPOOL	401 Lined / Primed -
14x2' 0"	DI FxF Epoxy Lined/Primer Coat	6	$ 1,612.00	$ 9,672.00	DUCTILE SPOOL	401 Lined / Primed -
14x2' 0"	DI FxF Epoxy Lined/Primer Coat spool w/ weep ring	2	$ 1,919.00	$ 3,838.00	DUCTILE SPOOL	401 Lined / Primed -
14x2' 0"	DI FxF Epoxy Lined/Primer Coat ~w/ 2" TOL	4	$ 2,305.00	$ 9,220.00	DUCTILE SPOOL	401 Lined / Primed - TOL
14x2' 6"	DI FxF Epoxy Lined/Primer Coat	1	$ 1,765.00	$ 1,765.00	DUCTILE SPOOL	401 Lined / Primed -
14x4' 0"	DI FxF Epoxy Lined/Primer Coat	9	$ 2,221.00	$ 19,989.00	DUCTILE SPOOL	401 Lined / Primed -
16x1' 6"	DI FxF Epoxy Lined/Primer Coat	1	$ 1,711.00	$ 1,711.00	DUCTILE SPOOL	401 Lined / Primed -
16x2' 0"	DI FxF Epoxy Lined/Primer Coat	2	$ 1,883.00	$ 3,766.00	DUCTILE SPOOL	401 Lined / Primed -
16x4' 0"	DI FxF Epoxy Lined/Primer Coat	1	$ 2,575.00	$ 2,575.00	DUCTILE SPOOL	401 Lined / Primed -
16x4' 0"	DI FxF Epoxy Lined/Primer Coat w/ weep ring	2	$ 2,932.00	$ 5,864.00	DUCTILE SPOOL	401 Lined / Primed -
16x8' 6"	DI FxF Epoxy Lined/Primer Coat	1	$ 3,993.00	$ 3,993.00	DUCTILE SPOOL	401 Lined / Primed -
18x3' 6"	DI FxF Epoxy Lined/Primer Coat	5	$ 2,733.00	$ 13,665.00	DUCTILE SPOOL	401 Lined / Primed -
18x3' 6"	DI FxF Epoxy Lined/Primer Coat ~w/ 2" TOL for pressure guage & 3" tap for air/vacuum valve	3	$ 3,880.00	$ 11,640.00	DUCTILE SPOOL	401 Lined / Primed -
18x4' 0"	DI FxF Epoxy Lined/Primer Coat	2	$ 2,928.00	$ 5,856.00	DUCTILE SPOOL	401 Lined / Primed -
18x6' 6"	DI FxF Epoxy Lined/Primer Coat	5	$ 3,906.00	$ 19,530.00	DUCTILE SPOOL	401 Lined / Primed -
18x7' 0"	DI FxF Epoxy Lined/Primer Coat	2	$ 4,102.00	$ 8,204.00	DUCTILE SPOOL	401 Lined / Primed -
18x10' 6"	DI FxF Epoxy Lined/Primer Coat	1	$ 5,476.00	$ 5,476.00	DUCTILE SPOOL	401 Lined / Primed -
18x12' 6"	DI FxF Epoxy Lined/Primer Coat	3	$ 6,253.00	$ 18,759.00	DUCTILE SPOOL	401 Lined / Primed -
20x1' 6"	DI FxF Epoxy Lined/Primer Coat spool w/ weep ring	4	$ 2,820.00	$ 11,280.00	DUCTILE SPOOL	401 Lined / Primed -
24x1' 0"	DI FxF Epoxy Lined/Primer Coat	1	$ 2,660.00	$ 2,660.00	DUCTILE SPOOL	401 Lined / Primed -
24x1' 6"	DI FxF Epoxy Lined/Primer Coat	4	$ 2,943.00	$ 11,772.00	DUCTILE SPOOL	401 Lined / Primed -
24x1' 6"	DI FxF Epoxy Lined/Primer Coat	5	$ 2,943.00	$ 14,715.00	DUCTILE SPOOL	401 Lined / Primed -
24x1' 6"	DI FxF Epoxy Lined/Primer Coat	8	$ 2,943.00	$ 23,544.00	DUCTILE SPOOL	401 Lined / Primed -
24x1' 6"	DI FxF Epoxy Lined/Primer Coat ~w/ 4" tap for air/vacuum valve TOL	1	$ 4,180.00	$ 4,180.00	DUCTILE SPOOL	401 Lined / Primed - TOL
24x2' 0"	DI FxF Epoxy Lined/Primer Coat	3	$ 3,226.00	$ 9,678.00	DUCTILE SPOOL	401 Lined / Primed -
24x2' 0"	DI FxF Epoxy Lined/Primer Coat	1	$ 3,226.00	$ 3,226.00	DUCTILE SPOOL	401 Lined / Primed -
24x2' 0"	DI FxF Epoxy Lined/Primer Coat ~w/ 4" tap for air/vacuum valve TOL	1	$ 4,453.00	$ 4,453.00	DUCTILE SPOOL	401 Lined / Primed - TOL
24x2' 6"	DI FxF Epoxy Lined/Primer Coat	2	$ 3,392.00	$ 6,784.00	DUCTILE SPOOL	401 Lined / Primed -
24x3' 0"	DI FxF Epoxy Lined/Primer Coat	19	$ 3,665.00	$ 69,635.00	DUCTILE SPOOL	401 Lined / Primed -
24x3' 6"	DI FxF Epoxy Lined/Primer Coat	6	$ 3,938.00	$ 23,628.00	DUCTILE SPOOL	401 Lined / Primed -
24x3' 6"	DI FxF Epoxy Lined/Primer Coat	1	$ 3,938.00	$ 3,938.00	DUCTILE SPOOL	401 Lined / Primed -
24x3' 6"	DI FxF Epoxy Lined/Primer Coat ~w/ 4" tap for air/vacuum valve TOL	1	$ 5,273.00	$ 5,273.00	DUCTILE SPOOL	401 Lined / Primed - TOL
24x4' 0"	DI FxF Epoxy Lined/Primer Coat	5	$ 4,212.00	$ 21,060.00	DUCTILE SPOOL	401 Lined / Primed -
24x5' 0"	DI FxF Epoxy Lined/Primer Coat	1	$ 4,758.00	$ 4,758.00	DUCTILE SPOOL	401 Lined / Primed -
24x5' 6"	DI FxF Epoxy Lined/Primer Coat	1	$ 5,032.00	$ 5,032.00	DUCTILE SPOOL	401 Lined / Primed -
24x5' 6"	DI FxF Epoxy Lined/Primer Coat	1	$ 5,032.00	$ 5,032.00	DUCTILE SPOOL	401 Lined / Primed -
24x6' 0"	DI FxF Epoxy Lined/Primer Coat	1	$ 5,305.00	$ 5,305.00	DUCTILE SPOOL	401 Lined / Primed -
24x6' 6"	DI FxF Epoxy Lined/Primer Coat	2	$ 5,578.00	$ 11,156.00	DUCTILE SPOOL	401 Lined / Primed -
24x7' 0"	DI FxF Epoxy Lined/Primer Coat	1	$ 5,852.00	$ 5,852.00	DUCTILE SPOOL	401 Lined / Primed -
24x13' 6"	DI FxF Epoxy Lined/Primer Coat	1	$ 9,405.00	$ 9,405.00	DUCTILE SPOOL	401 Lined / Primed -
24x15' 0"	DI FxF Epoxy Lined/Primer Coat	1	$ 9,689.00	$ 9,689.00	DUCTILE SPOOL	401 Lined / Primed -
24x17' 6"	DI FxF Epoxy Lined/Primer Coat	1	$ 10,999.00	$ 10,999.00	DUCTILE SPOOL	401 Lined / Primed -
12	Ductile Iron Pipe Push On CL350 RESTRAINED 401 LINED	29-LF	$ 95.88	$ 2,780.52	DUCTILE	TR FLEX
14	Ductile Iron Pipe Push On CL350 RESTRAINED 401 LINED	18-LF	$ 131.33	$ 2,363.94	DUCTILE	TR FLEX
16	Ductile Iron Pipe Push On CL350 RESTRAINED 401 LINED	30-LF	$ 143.77	$ 4,313.10	DUCTILE	TR FLEX
1/4	Sch 80 CPVC PE Pipe	696-LF	$ 1.79	$ 1,245.84	CPVC	
1/2	Sch 80 CPVC PE Pipe	249-LF	$ 1.92	$ 478.08	CPVC	
3/4	Sch 80 CPVC PE Pipe	179-LF	$ 2.65	$ 474.35	CPVC	
1	Sch 80 CPVC PE Pipe	925-LF	$ 3.86	$ 3,570.50	CPVC	
1	Sch 80 CPVC PE Pipe ~	22-LF	$ 3.86	$ 84.92	CPVC	
1-1/2	Sch 80 CPVC PE Pipe	483-LF	$ 6.49	$ 3,134.67	CPVC	
1-1/2	Sch 80 CPVC PE Pipe ~	23-LF	$ 6.49	$ 149.27	CPVC	
2	Sch 80 CPVC PE Pipe	48-LF	$ 9.03	$ 433.44	CPVC	
2-1/2	Sch 80 CPVC PE Pipe	28-LF	$ 13.67	$ 382.76	CPVC	
3	Sch 80 CPVC PE Pipe	37-LF	$ 16.96	$ 627.52	CPVC	
3	Sch 80 CPVC PE Pipe ~	19-LF	$ 16.96	$ 322.24	CPVC	
12	Sch 80 CPVC PE Pipe	329-LF	$ 170.62	$ 56,133.98	CPVC	
24	Sch 80 CPVC PE Pipe	132-LF	$ 729.11	$ 96,242.52	CPVC	
12	FxF Epoxy/Primer 90 Ell	8	$ 1,342.16	$ 10,737.28	DUCTILE FTG	401 LINED
14	FxF Epoxy/Primer 90 Ell	9	$ 1,678.97	$ 15,110.73	DUCTILE FTG	401 LINED
16	FxF Epoxy/Primer 90 Ell	4	$ 2,060.39	$ 8,241.56	DUCTILE FTG	401 LINED
18	FxF Epoxy/Primer 90 Ell	9	$ 2,685.24	$ 24,167.16	DUCTILE FTG	401 LINED
24	FxF Epoxy/Primer 90 Ell	18	$ 5,032.73	$ 90,589.14	DUCTILE FTG	401 LINED
12	FxF Epoxy/Primer 45 Ell	1	$ 1,192.00	$ 1,192.00	DUCTILE FTG	401 LINED
12	FxF Epoxy/Primer Tee	11	$ 1,907.00	$ 20,977.00	DUCTILE FTG	401 LINED
14	FxF Epoxy/Primer Tee	3	$ 2,648.00	$ 7,944.00	DUCTILE FTG	401 LINED
24	FxF Epoxy/Primer Tee	35	$ 6,987.00	$ 244,545.00	DUCTILE FTG	401 LINED
12x10	FxF Epoxy/Primer Conc Red	2	$ 1,159.00	$ 2,318.00	DUCTILE FTG	401 LINED
12x10	FxF Epoxy/Primer Conc Red ~w/ 2" TOL for pressure guage	4	$ 1,490.00	$ 5,960.00	DUCTILE FTG	401 LINED TAPS / TOL ON FITTINGS NOT RECOMM
14x10	FxF Epoxy/Primer Conc Red ~w/ 2" TOL for pressure guage	3	$ 1,674.00	$ 5,022.00	DUCTILE FTG	401 LINED TAPS / TOL ON FITTINGS NOT RECOMM
14x12	FxF Epoxy/Primer Conc Red	7	$ 1,367.00	$ 9,569.00	DUCTILE FTG	401 LINED
16x12	FxF Epoxy/Primer Conc Red ~w/ 2" TOL for pressure guage	1	$ 1,944.00	$ 1,944.00	DUCTILE FTG	401 LINED TAPS / TOL ON FITTINGS NOT RECOMM
18x12	FxF Epoxy/Primer Conc Red	3	$ 1,951.00	$ 5,853.00	DUCTILE FTG	401 LINED
18x16	FxF Epoxy/Primer Conc Red	6	$ 2,162.00	$ 12,972.00	DUCTILE FTG	401 LINED
24x12	FxF Epoxy/Primer Conc Red	4	$ 3,665.00	$ 14,660.00	DUCTILE FTG	401 LINED
24x18	FxF Epoxy/Primer Conc Red	4	$ 3,886.00	$ 15,544.00	DUCTILE FTG	401 LINED
24x20	FxF Epoxy/Primer Conc Red	4	$ 4,111.00	$ 16,444.00	DUCTILE FTG	401 LINED
14	FxF Epoxy/Primer 22-1/2 Ell	8	$ 1,590.00	$ 12,720.00	DUCTILE FTG	401 LINED
16	FxF Epoxy/Primer 22-1/2 Ell	1	$ 1,770.00	$ 1,770.00	DUCTILE FTG	401 LINED
14x12	FxF Epoxy/Primer Red Tee	7	$ 2,599.00	$ 18,193.00	DUCTILE FTG	401 LINED
16x12	FxF Epoxy/Primer Red Tee	1	$ 2,622.00	$ 2,622.00	DUCTILE FTG	401 LINED
24x12	FxF Epoxy/Primer Red Tee	5	$ 4,939.00	$ 24,695.00	DUCTILE FTG	401 LINED
24x16	FxF Epoxy/Primer Red Tee	2	$ 5,042.00	$ 10,084.00	DUCTILE FTG	401 LINED
24x18	FxF Epoxy/Primer Red Tee	3	$ 7,642.00	$ 22,926.00	DUCTILE FTG	401 LINED
24	MJxMJ Epoxy/Asphalt 45 Ell C153	2	$ 2,487.00	$ 4,974.00	DUCTILE FTG	401 LINED

12	MJxMJ Epoxy/Asphalt 90 Ell C153	3	$ 869.00	$ 2,607.00	DUCTILE FTG	401 LINED
16	MJxMJ Epoxy/Asphalt 90 Ell C153	4	$ 1,536.00	$ 6,144.00	DUCTILE FTG	401 LINED
24	MJxMJ Epoxy/Asphalt 90 Ell C153	1	$ 3,353.00	$ 3,353.00	DUCTILE FTG	401 LINED
12	MJxMJ Epoxy/Asphalt Tee C153	3	$ 1,060.00	$ 3,180.00	DUCTILE FTG	401 LINED
14	MJxMJ Epoxy/Asphalt Tee C153	2	$ 1,573.00	$ 3,146.00	DUCTILE FTG	401 LINED
1/2	Wrot Copper 90 Ell	24	$ 1.06	$ 25.44	COPPER	
1	Wrot Copper 90 Ell	24	$ 5.22	$ 125.28	COPPER	
2	Wrot Copper 90 Ell	22	$ 19.13	$ 420.86	COPPER	
1	Wrot Copper Tee	8	$ 9.65	$ 77.20	COPPER	
2	Wrot Copper Tee	2	$ 49.60	$ 99.20	COPPER	
1/4	CPVC Sch 80 90 Ell	78	$ 10.90	$ 850.20	CPVC	
1/2	CPVC Sch 80 90 Ell	64	$ 4.26	$ 272.64	CPVC	
3/4	CPVC Sch 80 90 Ell	10	$ 5.45	$ 54.50	CPVC	
3/4	CPVC Sch 80 90 Ell ~	4	$ 5.45	$ 21.80	CPVC	
1	CPVC Sch 80 90 Ell	176	$ 8.65	$ 1,522.40	CPVC	
1	CPVC Sch 80 90 Ell ~	4	$ 8.65	$ 34.60	CPVC	
1-1/2	CPVC Sch 80 90 Ell	54	$ 20.88	$ 1,127.52	CPVC	
1-1/2	CPVC Sch 80 90 Ell ~	8	$ 20.88	$ 167.04	CPVC	
2	CPVC Sch 80 90 Ell	37	$ 25.21	$ 932.77	CPVC	
2-1/2	CPVC Sch 80 90 Ell	38	$ 58.06	$ 2,206.28	CPVC	
3	CPVC Sch 80 90 Ell	21	$ 65.74	$ 1,380.54	CPVC	
12	CPVC Sch 80 90 Ell	12	$ 2,013.00	$ 24,156.00	CPVC	
3	CPVC Sch 80 45 Ell	6	$ 71.26	$ 427.56	CPVC	
12	CPVC Sch 80 45 Ell	2	$ 2,002.00	$ 4,004.00	CPVC	
1/4	CPVC Sch 80 Tee	1	$ 10.01	$ 10.01	CPVC	
1/2	CPVC Sch 80 Tee	16	$ 10.01	$ 160.16	CPVC	
3/4	CPVC Sch 80 Tee	5	$ 10.18	$ 50.90	CPVC	
3/4	CPVC Sch 80 Tee ~	1	$ 10.18	$ 10.18	CPVC	
1	CPVC Sch 80 Tee	26	$ 12.48	$ 324.48	CPVC	
1	CPVC Sch 80 Tee ~	2	$ 12.48	$ 24.96	CPVC	
1-1/2	CPVC Sch 80 Tee	15	$ 30.17	$ 452.55	CPVC	
1-1/2	CPVC Sch 80 Tee ~	2	$ 30.17	$ 60.34	CPVC	
2	CPVC Sch 80 Tee	17	$ 33.58	$ 570.86	CPVC	
2-1/2	CPVC Sch 80 Tee	7	$ 85.49	$ 598.43	CPVC	
3	CPVC Sch 80 Tee	2	$ 85.49	$ 170.98	CPVC	
12	CPVC Sch 80 Tee	9	$ 2,480.00	$ 22,320.00	CPVC	
12	CPVC Sch 80 Coupling	9	$ 528.00	$ 4,752.00	CPVC	
24	CPVC Sch 80 Coupling	4	$ 5,599.00	$ 22,396.00	CPVC	
1/4	CPVC Sch 80 Union w/Viton O-Ring	8	$ 26.03	$ 208.24	CPVC	
1/2	CPVC Sch 80 Union w/Viton O-Ring	12	$ 18.15	$ 217.80	CPVC	
3/4	CPVC Sch 80 Union w/Viton O-Ring	5	$ 20.22	$ 101.10	CPVC	
1	CPVC Sch 80 Union w/Viton O-Ring	20	$ 22.77	$ 455.40	CPVC	
1x1/2	CPVC Sch 80 Reducer Coupling	1	$ 15.78	$ 15.78	CPVC	
1-1/2x3/4	CPVC Sch 80 Reducer Coupling	1	$ 38.24	$ 38.24	CPVC	
1-1/2x1	CPVC Sch 80 Reducer Coupling	11	$ 38.24	$ 420.64	CPVC	
2x1/2	CPVC Sch 80 Reducer Coupling	1	$ 50.57	$ 50.57	CPVC	
2x1	CPVC Sch 80 Reducer Coupling	3	$ 50.57	$ 151.71	CPVC	
2x1-1/2	CPVC Sch 80 Reducer Coupling	4	$ 50.57	$ 202.28	CPVC	
2-1/2x1-1/2	CPVC Sch 80 Reducer Coupling	3	$ 57.58	$ 172.74	CPVC	
3x1	CPVC Sch 80 Reducer Coupling ~	2	$ 142.42	$ 284.84	CPVC	
3x2	CPVC Sch 80 Reducer Coupling	7	$ 116.34	$ 814.38	CPVC	
14x12	CPVC Sch 80 Reducer Coupling	2	$ 1,157.00	$ 2,314.00	CPVC	
24x12	CPVC Sch 80 Reducer Coupling	4	$ 7,802.00	$ 31,208.00	CPVC	
3	CPVC Sch 80 Plug ~	2	$ 41.02	$ 82.04	CPVC	
1x1/2	CPVC Sch 80 Reducing Tee	1	$ 25.74	$ 25.74	CPVC	
2-1/2x1-1/2	CPVC Sch 80 Reducing Tee	4	$ 71.98	$ 287.92	CPVC	
24x12	CPVC Sch 80 Reducing Tee	20	$ 14,910.00	$ 298,200.00	CPVC	
3	CPVC Sch 80 Grooved Cplg Adapter	1	$ 70.56	$ 70.56	CPVC	
1-1/2	CPVC Sch 80 Union w/EPDM O-Ring	2	$ 49.40	$ 98.80	CPVC	
2-1/2	CPVC Sch 80 Union w/EPDM O-Ring	1	$ 135.61	$ 135.61	CPVC	
2	PVC Sch 80 90 Ell	2	$ 5.97	$ 11.94	PVC	
4	PVC Sch 80 90 Ell	2	$ 23.90	$ 47.80	PVC	
4	PVC Sch 80 Tee	1	$ 34.31	$ 34.31	PVC	
3	Combination Air Relief/Vacuum Flg 316SS w/ Non-Slam & One Way Check - ARI D26SSNS03IN FOR WASTERWATER	5	$ 7,247.00	$ 36,235.00	VALVE - ARV	
3	Combination Air Relief/Vacuum Flg 316SS w/ Non-Slam & One Way Check - ARI D26SSNS03IN FOR WASTERWATER	1	$ 7,247.00	$ 7,247.00	VALVE - ARV	
4	Combination Air Relief/Vacuum Flg 316SS w/ Non-Slam & One Way Check - ARI D26SSNS04IN FOR WASTERWATER	1	$ 14,038.00	$ 14,038.00	VALVE - ARV	
12	Flg General Purpose BFV w/Hand W	2	$ 1,699.00	$ 3,398.00	VALVE - BUTTERFLY	
16	Flg General Purpose BFV w/Hand W	1	$ 2,799.00	$ 2,799.00	VALVE - BUTTERFLY	
18	Flg General Purpose BFV w/Hand W	6	$ 3,599.00	$ 21,594.00	VALVE - BUTTERFLY	
18	Flg General Purpose BFV w/Hand W ~BFV-507	1	$ 3,599.00	$ 3,599.00	VALVE - BUTTERFLY	
18	Flg General Purpose BFV w/Hand W ~BFV-509	1	$ 3,599.00	$ 3,599.00	VALVE - BUTTERFLY	
18	Flg General Purpose BFV w/Hand W ~BFV-RW-103	1	$ 3,599.00	$ 3,599.00	VALVE - BUTTERFLY	
18	Flg General Purpose BFV w/Hand W ~BFV-RW-202	1	$ 3,599.00	$ 3,599.00	VALVE - BUTTERFLY	
18	Flg General Purpose BFV w/Hand W ~BFV-RW-302	1	$ 3,599.00	$ 3,599.00	VALVE - BUTTERFLY	
24	Flg General Purpose BFV w/Hand W ~**BFV-1	1	$ 7,739.00	$ 7,739.00	VALVE - BUTTERFLY	
24	Flg General Purpose BFV w/Hand W ~**BFV-2	1	$ 7,739.00	$ 7,739.00	VALVE - BUTTERFLY	
24	Flg General Purpose BFV w/Hand W ~**BFV-3	1	$ 7,739.00	$ 7,739.00	VALVE - BUTTERFLY	
24	Flg General Purpose BFV w/Hand W ~BFV-508	1	$ 7,739.00	$ 7,739.00	VALVE - BUTTERFLY	
24	Flg General Purpose BFV w/Hand W ~BFV-RW-011	1	$ 7,739.00	$ 7,739.00	VALVE - BUTTERFLY	
12	Flg Gen Purpose BFV W/Pneum ~BFV-102	1	$ 4,288.00	$ 4,288.00	VALVE - BUTTERFLY	
12	Flg Gen Purpose BFV W/Pneum ~BFV-202	1	$ 4,288.00	$ 4,288.00	VALVE - BUTTERFLY	
12	Flg Gen Purpose BFV W/Pneum ~BFV-302	1	$ 4,288.00	$ 4,288.00	VALVE - BUTTERFLY	
12	Flg Gen Purpose BFV W/Pneum ~BFV-402	1	$ 4,288.00	$ 4,288.00	VALVE - BUTTERFLY	
1/2	Ball Valve Thd SST	34	$ 38.00	$ 1,292.00	VALVE - BALL	
1	Ball Valve Thd SST	79	$ 75.00	$ 5,925.00	VALVE - BALL	
2	PVC True Union Solv Weld Ball	2	$ 156.00	$ 312.00	VALVE - PVC BALL	
4	PVC True Union Solv Weld Ball	1	$ 225.00	$ 225.00	VALVE - PVC BALL	
1/2	Sweat Ball Valve	12	$ 26.78	$ 321.36	VALVE - BALL	
1	Sweat Ball Valve	14	$ 56.81	$ 795.34	VALVE - BALL	
2	Sweat Ball Valve	1	$ 88.88	$ 88.88	VALVE - BALL	
12	Flg Swing Check Valve	1	$ 9,747.00	$ 9,747.00	VALVE - CHECK	
18	Flg Swing Check Valve ~CKS-RW-102	1	$ 19,097.00	$ 19,097.00	VALVE - CHECK	
18	Flg Swing Check Valve ~CKS-RW-201	1	$ 19,097.00	$ 19,097.00	VALVE - CHECK	
18	Flg Swing Check Valve ~CKS-RW-301	1	$ 19,097.00	$ 19,097.00	VALVE - CHECK	
2	150# Flanged Check Valve	1	$ 521.00	$ 521.00	VALVE - CHECK	
2	Sweat Check Valve	1	$ 521.00	$ 521.00	VALVE - CHECK	
3	150# AWWA Flg Plug Valve w/Gear	6	$ 410.00	$ 2,460.00	VALVE - PLUG	
4	150# AWWA Flg Plug Valve w/Gear	1	$ 749.00	$ 749.00	VALVE - PLUG	
18	150# AWWA Flg Plug Valve w/Gear ~009	1	$ 6,518.00	$ 6,518.00	VALVE - PLUG	
18	150# AWWA Flg Plug Valve w/Gear ~BFV-RW-010	1	$ 6,518.00	$ 6,518.00	VALVE - PLUG	
3/4	150# Flanged Diaphragm Valve	1	$ 365.12	$ 365.12	VALVE -DIAPHRAGM	
1/2	CPVC Solvent Weld Diaphragm Valve	1	$ 272.00	$ 272.00	CPVC - DIAPHRAGM VALVE	
1/2	CPVC True Union Solv Weld Diaphr	2	$ 272.00	$ 544.00	CPVC - DIAPHRAGM VALVE	
1-1/2	CPVC T/U Solv Weld Diaphragm Val ~PRV	6	$ 578.00	$ 3,468.00	CPVC - DIAPHRAGM VALVE	
3	307B HDG Bolt 1/8" Neo Gskt Kit	18	$ 8.94	$ 160.92	BNG	
10	307B HDG Bolt 1/8" Neo Gskt Kit	10	$ 56.08	$ 560.80	BNG	
12	307B HDG Bolt 1/8" Neo Gskt Kit	149	$ 58.61	$ 8,732.89	BNG	
14	307B HDG Bolt 1/8" Neo Gskt Kit	78	$ 87.98	$ 6,862.44	BNG	
16	307B HDG Bolt 1/8" Neo Gskt Kit	25	$ 116.16	$ 2,904.00	BNG	
18	307B HDG Bolt 1/8" Neo Gskt Kit	76	$ 167.21	$ 12,707.96	BNG	
20	307B HDG Bolt 1/8" Neo Gskt Kit	8	$ 208.62	$ 1,668.96	BNG	
24	307B HDG Bolt 1/8" Neo Gskt Kit	159	$ 278.00	$ 44,202.00	BNG	
1	316 SST Bolt 1/8" Neo Gskt Kit	3	$ 12.64	$ 37.92	BNG	

2	316 SST Bolt 1/8" Neo Gskt Kit	3	$ 12.99	$ 38.97	BNG	
4	316 SST Bolt 1/8" Neo Gskt Kit	5	$ 26.55	$ 132.75	BNG	
12	316 SST Bolt 1/8" Neo Gskt Kit	6	$ 98.10	$ 588.60	BNG	
18	316 SST Bolt 1/8" Neo Gskt Kit	3	$ 337.97	$ 1,013.91	BNG	
24	316 SST Bolt 1/8" Neo Gskt Kit	6	$ 577.00	$ 3,462.00	BNG	
12	316 SST Bolt & Isolation Kit	1	$ 220.25	$ 220.25	BNG	TYPE E PHENOLIC
24	316 SST Bolt & Isolation Kit	4	$ 840.00	$ 3,360.00	BNG	TYPE E PHENOLIC
14	307B CS Bolt & Isolation Kit	4	$ 213.25	$ 853.00	BNG	TYPE E PHENOLIC
1	150# Sch 80 CPVC SW Flange	3	$ 21.34	$ 64.02	CPVC	
4	150# Sch 80 CPVC SW Flange	2	$ 102.72	$ 205.44	CPVC	
1/2	150# Sch 80 CPVC VS PR Flange	6	$ 21.34	$ 128.04	CPVC	
1	150# Sch 80 CPVC VS PR Flange	2	$ 21.34	$ 42.68	CPVC	
1	150# Sch 80 CPVC VS PR Flange ~	2	$ 21.34	$ 42.68	CPVC	
1-1/2	150# Sch 80 CPVC VS PR Flange	6	$ 28.96	$ 173.76	CPVC	
2	150# Sch 80 CPVC VS PR Flange	6	$ 35.06	$ 210.36	CPVC	
2-1/2	150# Sch 80 CPVC VS PR Flange	6	$ 72.65	$ 435.90	CPVC	
3	150# Sch 80 CPVC VS PR Flange	3	$ 76.06	$ 228.18	CPVC	
12	150# Sch 80 CPVC VS PR Flange	36	$ 1,616.00	$ 58,176.00	CPVC	
24	150# Sch 80 CPVC VS PR Flange	8	$ 7,053.00	$ 56,424.00	CPVC	
2	150# Sch 80 PVC Solv Weld Flange	2	$ 15.27	$ 30.54	PVC	
24	Ductile Iron C110 Blind Flange	4	$ 4,252.00	$ 17,008.00	DUCTILE FTG	401 LINED
8	304 SS 150# Slip-On Flange	6	$ 453.00	$ 2,718.00	SST	
12	304 SS 150# Slip-On Flange	10	$ 752.00	$ 7,520.00	SST	
2	125# Cast Copper Flange	1	$ 89.00	$ 89.00	COPPER	
12	SST Pipe Saddle Roller Support ~See detail 202 sheet M-7.02	6	$ 3,294.00	$ 19,764.00	SUPPORT	
18	SST Strap for Concrete Saddle	20	$ 265.00	$ 5,300.00	SUPPORT	
24	SST Strap for Concrete Saddle	7	$ 346.00	$ 2,422.00	SUPPORT	
2-1/2	SST Vertical Pipe Stanchion	3	$ 578.00	$ 1,734.00	SUPPORT	
18	P620 - Galv 90/Tee Pipe Supt Bol ~Refer to Detail 505, Sheet M-7.05, and M-1.04 keyed note 17	9	$ 823.00	$ 7,407.00	SUPPORT	
24	P620 - Galv 90/Tee Pipe Supt Bol	2	$ 823.00	$ 1,646.00	SUPPORT	
24	P620 - Galv 90/Tee Pipe Supt Bol ~Refer to detail 303 sheet M-7.03, and M-1.05 keyed note 17	1	$ 823.00	$ 823.00	SUPPORT	
12	P697 - SST Air Pipe Sliding Supt ~Refer to sheet M-7.02, detail 202	16	$ 1,470.00	$ 23,520.00	SUPPORT	
18	P602 - Galv Concrete Pipe Supt	2	$ 265.00	$ 530.00	SUPPORT	
24	P602 - Galv Concrete Pipe Supt	3	$ 338.00	$ 1,014.00	SUPPORT	
24	P602 - SST Concrete Pipe Supt	1	$ 676.00	$ 676.00	SUPPORT	
12	P658 - Galv Wall Bracket	16	$ 941.00	$ 15,056.00	SUPPORT	
12	P658 - Galv Wall Bracket ~Refer to sheet M-7.05,detail 504	6	$ 941.00	$ 5,646.00	SUPPORT	
14	P658 - SST Wall Bracket ~Refer to sheet M-7.05, detail 504	16	$ 1,647.00	$ 26,352.00	SUPPORT	
18	P624 - 2' Galv Adj Pipe Support	3	$ 764.00	$ 2,292.00	SUPPORT	
24	P624 - 2' Galv Adj Pipe Support	2	$ 805.00	$ 1,610.00	SUPPORT	
24	P624 - 4' Galv Adj Pipe Support	9	$ 829.00	$ 7,461.00	SUPPORT	
12	P630 - Galv Pipe Hanger @ Metal	4	$ 282.00	$ 1,128.00	SUPPORT	
14	P630 - Galv Pipe Hanger @ Metal	4	$ 329.00	$ 1,316.00	SUPPORT	
16	P630 - Galv Pipe Hanger @ Metal	2	$ 377.00	$ 754.00	SUPPORT	
12	D-205 '4' SST Adjustable Pipe Su	2	$ 770.00	$ 1,540.00	SUPPORT	
14	D-205 '2' Galv Adjustable Pipe S	4	$ 878.00	$ 3,512.00	SUPPORT	
12	D-204 'SST Pipe Hanger	13	$ 564.00	$ 7,332.00	SUPPORT	
24	#260 Galv Clevis Hanger	9	$ 564.00	$ 5,076.00	SUPPORT	
2	Wrot Copper Coupling	1	$ 10.31	$ 10.31	COPPER	
1/4	CPVC Sch 80 Coupling	20	$ 11.62	$ 232.40	CPVC	
1/2	CPVC Sch 80 Coupling	5	$ 4.50	$ 22.50	CPVC	
3/4	CPVC Sch 80 Coupling	6	$ 6.30	$ 37.80	CPVC	
1	CPVC Sch 80 Coupling	18	$ 8.50	$ 153.00	CPVC	
1-1/2	CPVC Sch 40 Coupling	15	$ 16.00	$ 240.00	CPVC	
12	CPVC Sch 80 Coupling	3	$ 528.00	$ 1,584.00	CPVC	
3	Victaulic Style 775 PVC Coupling	1	$ 175.00	$ 175.00	VIC	
14	Flex Coupling Rest (PE x PE)	4	$ 957.00	$ 3,828.00	COUPLING	FBE - ALLOY HARDWARE - STD GASKET - ROMAC 4
18	Flex Coupling Rest (PE x PE)	10	$ 1,199.00	$ 11,990.00	COUPLING	FBE - ALLOY HARDWARE - STD GASKET - ROMAC 4
24	Flex Coupling Rest (PE x PE)	7	$ 1,628.00	$ 11,396.00	COUPLING	FBE - ALLOY HARDWARE - STD GASKET - ROMAC 4
12	Split Sleeve Coupling (PE x PE)	6	$ 804.00	$ 4,824.00	COUPLING	ROMAC SS3
16	Split Sleeve Coupling (PE x PE)	1	$ 1,126.00	$ 1,126.00	COUPLING	ROMAC SS3
1	TPRV PVC Pressure Relief Valve	2	$ 875.00	$ 1,750.00	VALVE - PRV	
2	Flanged PRV for Water ~PRV	2	$ 1,125.00	$ 2,250.00	VALVE - PRV	
10"	FxF SST/Rubber Exp Joint Restrained ~Refer to sheet M-7.03, detail 301,	2	$ 2,891.00	$ 5,782.00	EXPANSION	300 degrees max per MFG
12"	FxF SST/Rubber Exp Joint Restrained ~Refer to sheet M-7.03, detail 301,	5	$ 3,317.00	$ 16,585.00	EXPANSION	300 degrees max per MFG
12"	FxF SST/Rubber Exp Joint Restrained ~Refer to sheet M-7.03, detail 301,	5	$ 3,317.00	$ 16,585.00	EXPANSION	300 degrees max per MFG
1	Link Seal ~1ft Length	3	$ 16.15	$ 48.45	PENETRATIONS	
1-1/2	Link Seal ~1ft Long	1	$ 22.61	$ 22.61	PENETRATIONS	
12	Link Seal	44	$ 143.36	$ 6,307.84	PENETRATIONS	
14	Link Seal	4	$ 163.84	$ 655.36	PENETRATIONS	
18	Link Seal ~1.5ft Length	3	$ 463.75	$ 1,391.25	PENETRATIONS	
28	Link Seal ~1ft length	8	$ 742.00	$ 5,936.00	PENETRATIONS	
1	Steel Pipe Wall Sleeve ~1ft SS Sleeve	3	$ 145.00	$ 435.00	PENETRATIONS	
2	Steel Pipe Wall Sleeve ~1ft long SS Sleeve	1	$ 157.00	$ 157.00	PENETRATIONS	
6	Steel Pipe Wall Sleeve ~LABOuter Ring ONLY	20	$ 371.00	$ 7,420.00	PENETRATIONS	
10	Steel Pipe Wall Sleeve ~LABOuter Ring ONLY	20	$ 606.00	$ 12,120.00	PENETRATIONS	
12	Steel Pipe Wall Sleeve ~1ft length, w/ annular ring - Refer to sheet M-7.01 detail 104	20	$ 723.00	$ 14,460.00	PENETRATIONS	
14	Steel Pipe Wall Sleeve ~refer to sheet M-7.01 detail 102, 1ft length	1	$ 842.00	$ 842.00	PENETRATIONS	
16	Steel Pipe Wall Sleeve ~1.5 ft length, w/ annular ring - Refer to sheet M-7.01 detail 104	1	$ 1,017.00	$ 1,017.00	PENETRATIONS	
20	Steel Pipe Wall Sleeve ~1.5 ft SS Sleeve	3	$ 1,388.00	$ 4,164.00	PENETRATIONS	
30	Steel Pipe Wall Sleeve ~1ft length, w/ annular ring - Refer to sheet M-7.01 detail 104	2	$ 1,806.00	$ 3,612.00	PENETRATIONS	
1	Steel Pipe Floor Sleeve	1	$ 145.00	$ 145.00	PENETRATIONS	
14	Steel Pipe Floor Sleeve ~14 inches long, Refer to Sheet M-7.01, detail 102	1	$ 900.00	$ 900.00	PENETRATIONS	
16	Steel Pipe Floor Sleeve ~14 inches long, Refer to Sheet M-7.01, detail 102	1	$ 1,129.00	$ 1,129.00	PENETRATIONS	
1/4	CIQC Chemical Injection Quill Co ~Refer to detail 605 sheet M-7.06	2	$ 1,374.00	$ 2,748.00	CHEMICAL INJECTION	EB-159-B-P-10-0-01
1/2	CIQC Chemical Injection Quill Co	2	$ 1,374.00	$ 2,748.00	CHEMICAL INJECTION	EB-159-B-P-10-0-01
1	CIQC Chemical Injection Quill Co	3	$ 1,374.00	$ 4,122.00	CHEMICAL INJECTION	EB-159-B-P-10-0-01
NA	EYEW Emergency Eye Wash Station	5	$ 3,279.00	$ 16,395.00	MISC.	
			$ 587,805.40	**$ 2,558,000.57**		

Company: **Harrington**
Jobname: **Chandler RWIF GMP**
Pricing Due: **3/25/22 5:00 P.M.**
DO NOT INSERT OR DELETE ROWS
IF NEW ROWS ARE NEEDED, USE ROWS AT END OF LIST

Total Subtotal $ 220,600.05

Size	Description	Count	Bid Price	Total Bid Price	Filter	Notes
2	Sch 80 PVC PE Pipe	2-LF	$ 2.35	$ 4.70	PVC	
4	Sch 80 PVC PE Pipe	17-LF	$ 6.78	$ 115.26	PVC	
1/4	Sch 80 CPVC PE Pipe	696-LF	$ 1.10	$ 765.60	CPVC	
1/2	Sch 80 CPVC PE Pipe	249-LF	$ 1.38	$ 343.62	CPVC	
3/4	Sch 80 CPVC PE Pipe	179-LF	$ 1.90	$ 340.10	CPVC	
1	Sch 80 CPVC PE Pipe	925-LF	$ 2.77	$ 2,562.25	CPVC	
1	Sch 80 CPVC PE Pipe ~	22-LF	$ 2.77	$ 60.94	CPVC	
1-1/2	Sch 80 CPVC PE Pipe	483-LF	$ 4.67	$ 2,255.61	CPVC	
1-1/2	Sch 80 CPVC PE Pipe ~	23-LF	$ 4.67	$ 107.41	CPVC	
2	Sch 80 CPVC PE Pipe	48-LF	$ 6.49	$ 311.52	CPVC	
2	Sch 80 CPVC PE Pipe ~	0-LF	$ 6.49	$ -	CPVC	
2-1/2	Sch 80 CPVC PE Pipe	28-LF	$ 9.82	$ 274.96	CPVC	
3	Sch 80 CPVC PE Pipe	37-LF	$ 12.18	$ 450.66	CPVC	
3	Sch 80 CPVC PE Pipe ~	19-LF	$ 12.18	$ 231.42	CPVC	
12	Sch 80 CPVC PE Pipe	329-LF	$ 122.55	$ 40,318.95	CPVC	
1/4	CPVC Sch 80 90 Ell	78	$ 3.41	$ 265.98	CPVC	
1/2	CPVC Sch 80 90 Ell	64	$ 1.33	$ 85.12	CVPC	
3/4	CPVC Sch 80 90 Ell	10	$ 1.71	$ 17.10	CPVC	
3/4	CPVC Sch 80 90 Ell ~	4	$ 1.71	$ 6.84	CPVC	
1	CPVC Sch 80 90 Ell	176	$ 2.70	$ 475.20	CPVC	
1	CPVC Sch 80 90 Ell ~	4	$ 2.70	$ 10.80	CPVC	
1-1/2	CPVC Sch 80 90 Ell	54	$ 6.53	$ 352.62	CPVC	
1-1/2	CPVC Sch 80 90 Ell ~	8	$ 6.53	$ 52.24	CPVC	
2	CPVC Sch 80 90 Ell	37	$ 7.88	$ 291.56	CPVC	
2-1/2	CPVC Sch 80 90 Ell	38	$ 18.15	$ 689.70	CPVC	
3	CPVC Sch 80 90 Ell	21	$ 20.54	$ 431.34	CPVC	
12	CPVC Sch 80 90 Ell	12	$ 1,545.82	$ 18,549.84	CPVC	
3	CPVC Sch 80 45 Ell	6	$ 22.27	$ 133.62	CPVC	
12	CPVC Sch 80 45 Ell	2	$ 1,535.17	$ 3,070.34	CPVC	
1/4	CPVC Sch 80 Tee	1	$ 3.13	$ 3.13	CPVC	
1/2	CPVC Sch 80 Tee	16	$ 3.13	$ 50.08	CPVC	
3/4	CPVC Sch 80 Tee	5	$ 3.18	$ 15.90	CPVC	
3/4	CPVC Sch 80 Tee ~	1	$ 3.18	$ 3.18	CPVC	
1	CPVC Sch 80 Tee	26	$ 3.90	$ 101.40	CPVC	
1	CPVC Sch 80 Tee ~	2	$ 3.90	$ 7.80	CPVC	
1-1/2	CPVC Sch 80 Tee	15	$ 9.43	$ 141.45	CPVC	
1-1/2	CPVC Sch 80 Tee ~	2	$ 9.43	$ 18.86	CPVC	
2	CPVC Sch 80 Tee	17	$ 10.50	$ 178.50	CPVC	
2-1/2	CPVC Sch 80 Tee	7	$ 26.72	$ 187.04	CPVC	
3	CPVC Sch 80 Tee	2	$ 26.72	$ 53.44	CPVC	
12	CPVC Sch 80 Tee	9	$ 1,901.79	$ 17,116.11	CPVC	
12	CPVC Sch 80 Coupling	9	$ 405.60	$ 3,650.40	CPVC	
1/4	CPVC Sch 80 Union w/Viton O-Ring	8	$ 9.10	$ 72.80	CPVC	
1/2	CPVC Sch 80 Union w/Viton O-Ring	12	$ 6.05	$ 72.60	CPVC	
3/4	CPVC Sch 80 Union w/Viton O-Ring	5	$ 6.32	$ 31.60	CPVC	
1	CPVC Sch 80 Union w/Viton O-Ring	20	$ 7.59	$ 151.80	CPVC	
1x1/2	CPVC Sch 80 Reducer Coupling	1	$ 5.26	$ 5.26	CPVC	
1-1/2x3/4	CPVC Sch 80 Reducer Coupling	1	$ 11.95	$ 11.95	CPVC	
1-1/2x1	CPVC Sch 80 Reducer Coupling	11	$ 11.95	$ 131.45	CPVC	
2x1/2	CPVC Sch 80 Reducer Coupling	1	$ 15.80	$ 15.80	CPVC	
2x1	CPVC Sch 80 Reducer Coupling	3	$ 15.80	$ 47.40	CPVC	
2x1-1/2	CPVC Sch 80 Reducer Coupling	4	$ 15.80	$ 63.20	CPVC	
2-1/2x1-1/2	CPVC Sch 80 Reducer Coupling	3	$ 18.00	$ 54.00	CPVC	
3x1	CPVC Sch 80 Reducer Coupling ~	2	$ 44.51	$ 89.02	CPVC	
3x2	CPVC Sch 80 Reducer Coupling	7	$ 36.36	$ 254.52	CPVC	
14x12	CPVC Sch 80 Reducer Coupling	2	$ 948.59	$ 1,897.18	CPVC	
3	CPVC Sch 80 Plug ~	2	$ 12.82	$ 25.64	CPVC	
1x1/2	CPVC Sch 80 Reducing Tee	1	$ 8.05	$ 8.05	CPVC	
2-1/2x1-1/2	CPVC Sch 80 Reducing Tee	4	$ 22.50	$ 90.00	CPVC	
1-1/2	CPVC Sch 80 Union w/EPDM O-Ring	2	$ 15.44	$ 30.88	CPVC	
2-1/2	CPVC Sch 80 Union w/EPDM O-Ring	1	$ 53.11	$ 53.11	CPVC	
2	PVC Sch 80 90 Ell	2	$ 2.71	$ 5.42	PVC	
4	PVC Sch 80 90 Ell	2	$ 10.84	$ 21.68	PVC	
4	PVC Sch 80 Tee	1	$ 15.19	$ 15.19	PVC	
2	CPVC Butterfly Valve w/Gear Op ~BFV-513, Solvent Weld, w/ Pneumatic Actuator	1	$ 2,704.00	$ 2,704.00	VALVE - CPVC BUTTERFLY	
2	PVC True Union Solv Weld Ball	2	$ 90.88	$ 181.76	VALVE - PVC BALL	
4	PVC True Union Solv Weld Ball	1	$ 373.76	$ 373.76	VALVE - PVC BALL	
1	CPVC Solvent Weld Ball Valve	30	$ 63.68	$ 1,910.40	VALVE - CPVC BALL	
1/2	CPVC True Union Solv Weld Ball	29	$ 41.28	$ 1,197.12	VALVE - CPVC BALL	
1/2	CPVC True Union Solv Weld Ball ~BAV-738 - w/ Pneumatic Actuator	1	$ 729.00	$ 729.00	VALVE - CPVC BALL	
1/2	CPVC True Union Solv Weld Ball ~BAV-739 - w/ Pneumatic Actuator	1	$ 729.00	$ 729.00	VALVE - CPVC BALL	
3/4	CPVC True Union Solv Weld Ball	5	$ 50.56	$ 252.80	VALVE - CPVC BALL	
1	CPVC True Union Solv Weld Ball	19	$ 63.68	$ 1,209.92	VALVE - CPVC BALL	
1	CPVC True Union Solv Weld Ball ~	2	$ 63.68	$ 127.36	VALVE - CPVC BALL	
1	CPVC True Union Solv Weld Ball ~BAV-736 - w/ Pneumatic Actuator	1	$ 759.00	$ 759.00	VALVE - CPVC BALL	
1	CPVC True Union Solv Weld Ball ~BAV-737 - w/ Pneumatic Actuator	1	$ 759.00	$ 759.00	VALVE - CPVC BALL	
1	CPVC True Union Solv Weld Ball ~BAV-739 - w/ Pneumatic Actuator	1	$ 759.00	$ 759.00	VALVE - CPVC BALL	
1-1/2	CPVC True Union Solv Weld Ball	12	$ 105.60	$ 1,267.20	VALVE - CPVC BALL	
1-1/2	CPVC True Union Solv Weld Ball ~	4	$ 105.60	$ 422.40	VALVE - CPVC BALL	
2	CPVC True Union Solv Weld Ball	30	$ 144.00	$ 4,320.00	VALVE - CPVC BALL	
2	CPVC True Union Solv Weld Ball ~w/ MOV - BAV-SD-101	1	$ 6,544.00	$ 6,544.00	VALVE - CPVC BALL	
2	CPVC True Union Solv Weld Ball ~w/ MOV - BAV-SD-201	1	$ 6,544.00	$ 6,544.00	VALVE - CPVC BALL	
2	CPVC True Union Solv Weld Ball ~w/ MOV - BAV-SD-301	1	$ 6,544.00	$ 6,544.00	VALVE - CPVC BALL	
2-1/2	CPVC True Union Solv Weld Ball	17	$ 400.96	$ 6,816.32	VALVE - CPVC BALL	
3	CPVC True Union Solv Weld Ball	2	$ 414.72	$ 829.44	VALVE - CPVC BALL	
1/2	CPVC Solvent Weld Check Valve	8	$ 61.09	$ 488.72	VALVE - CPVC CHECK	
3/4	CPVC Solvent Weld Check Valve	1	$ 72.98	$ 72.98	VALVE - CPVC CHECK	
1	CPVC Solvent Weld Check Valve	3	$ 85.28	$ 255.84	VALVE - CPVC CHECK	
1-1/2	CPVC Solvent Weld Check Valve	5	$ 177.12	$ 885.60	VALVE - CPVC CHECK	

1-1/2	CPVC Solvent Weld Check Valve ~	1	$ 177.12	$ 177.12	VALVE - CPVC CHECK
3	CPVC Solvent Weld Check Valve	1	$ 555.14	$ 555.14	VALVE - CPVC CHECK
3/4	150# Flanged Diaphragm Valve	1	$ 354.96	$ 354.96	VALVE -DIAPHRAGM
1/2	CPVC Solvent Weld Diaphragm Valv	1	$ 277.53	$ 277.53	CPVC - DIAPHRAGM VALVE
1/2	CPVC True Union Solv Weld Diaphr	2	$ 277.53	$ 555.06	CPVC - DIAPHRAGM VALVE
1-1/2	CPVC T/U Solv Weld Diaphragm Val ~PRV	6	$ 585.51	$ 3,513.06	CPVC - DIAPHRAGM VALVE
1	150# Sch 80 CPVC SW Flange	3	$ 6.67	$ 20.01	CPVC
4	150# Sch 80 CPVC SW Flange	2	$ 32.10	$ 64.20	CPVC
1/2	150# Sch 80 CPVC VS PR Flange	6	$ 5.98	$ 35.88	CPVC
1	150# Sch 80 CPVC VS PR Flange	2	$ 6.67	$ 13.34	CPVC
1	150# Sch 80 CPVC VS PR Flange ~	2	$ 6.67	$ 13.34	CPVC
1-1/2	150# Sch 80 CPVC VS PR Flange	6	$ 9.05	$ 54.30	CPVC
2	150# Sch 80 CPVC VS PR Flange	6	$ 10.96	$ 65.76	CPVC
2-1/2	150# Sch 80 CPVC VS PR Flange	6	$ 22.70	$ 136.20	CPVC
3	150# Sch 80 CPVC VS PR Flange	3	$ 23.77	$ 71.31	CPVC
12	150# Sch 80 CPVC VS PR Flange	36	$ 1,395.07	$ 50,222.52	CPVC
2	150# Sch 80 PVC Solv Weld Flange	2	$ 6.93	$ 13.86	PVC
1/4	CPVC Sch 80 Coupling	20	$ 3.63	$ 72.60	CPVC
1/2	CPVC Sch 80 Coupling	5	$ 1.41	$ 7.05	CPVC
3/4	CPVC Sch 80 Coupling	6	$ 1.97	$ 11.82	CPVC
1	CPVC Sch 80 Coupling	18	$ 2.66	$ 47.88	CPVC
1-1/2	CPVC Sch 40 Coupling	15	$ 5.00	$ 75.00	CPVC
12	CPVC Sch 80 Coupling	3	$ 405.60	$ 1,216.80	CPVC
1	TPRV PVC Pressure Relief Valve	2	$ 896.00	$ 1,792.00	VALVE - PRV
3/4	125# Flg Basket Strainer ~1/2" Basket Strainer	2	$ 640.05	$ 1,280.10	STRAINER
1	125# Flg Basket Strainer	1	$ 640.05	$ 640.05	STRAINER
1-1/2	125# Flg Basket Strainer	1	$ 1,139.80	$ 1,139.80	STRAINER
2-1/2	125# Flg Basket Strainer	3	$ 2,526.20	$ 7,578.60	STRAINER
1/2	PRV SWPressure Regulator Valve	2	$ 938.00	$ 1,876.00	VALVE - PRESSURE REGULATOR
1	PRV SWPressure Regulator Valve	3	$ 1,595.00	$ 4,785.00	VALVE - PRESSURE REGULATOR
			$ 48,014.50	**$ 220,600.05**	

Instrumentation And Controls
TAVCO A Division of IAC

6829 W. Frye Rd.
Chandler, AZ 85226
P : 480-921-0498
F : 480-921-7391
E : sales@instandcontrols.com

Southwest Projects

Quote

#34878
Quoted: 3/25/2022
Expiration: 4/25/2022

Bill To

Ship To

Project		Memo	
Southwest Projects		Southwest Projects	
FOB	**Shipping Method**	**Shipping Terms**	**Collect Account Number**
Shipping Point	Freight LTL	No Shipping Charge	
Terms	**Customer Contact**	**Sales Rep**	**Quoted By**
Net 30		Ritch Shank ritch@instandcontrols.com	Danny Arnold danny@instandcontrols.com

Item	Manufacturer	Est. Lead Time	Qty	Unit Price	Extended
803AS P/N: 803AS 3” CAV THD	Val-Matic	ESTIMATED LEAD TIME 20-24 WEEKS ARO FOR ALL ITEMS	6	$3,253.84	$19,523.04
1203AS.4 P/N: 1203AS.4 Surge Suppression Device for 3” CAV	Val-Matic		1	$1,724.71	$1,724.71
804AS P/N: 804AS 4” CAV THD	Val-Matic		1	$5,055.53	$5,055.53
2012/1C16A.3XP P/N: 2012/1C16A.3XP 12” BFV w HW	Val-Matic		2	$1,432.53	$2,865.06
2016/1D24A.3XP P/N: 2016/1D24A.3XP 16” BFV w HW	Val-Matic		1	$2,341.29	$2,341.29
2018/1E24A.3XP P/N: 2018/1E24A.3XP 18” BFV w HW	Val-Matic		11	$2,847.76	$31,325.36
2024/1F24A.3XP P/N: 2024/1F24A.3XP 24” BFV w HW	Val-Matic		5	$5,008.29	$25,041.45
2012.3XP/PCA P/N: 2012.3XP/PCA 12” BFV w Bray S92/160 PNEU ACT	Val-Matic		4	$2,480.12	$9,920.48
7812LS.3 P/N: 7812LS.3 12” FLG SWCV	Val-Matic		2	$3,936.27	$7,872.54
7818LS.3 P/N: 7818LS.3 12” FLG SWCV	Val-Matic		3	$7,658.82	$22,976.46

All sales order related transactions with Instrumentation and Controls, LLC shall be governed by Instrumentation and Controls, LLC’s Standard Sales Terms and Conditions (IAC Terms) which are subject to modification. Please visit http://instandcontrols.com/terms for the most up to date IAC Terms. Any contracts or agreements which are currently in place shall apply and will not be replaced by the IAC Terms.

Instrumentation And Controls
TAVCO A Divison of IAC

6829 W. Frye Rd.
Chandler, AZ 85226
P : 480-921-0498
F : 480-921-7391
E : sales@instandcontrols.com

Quote

#34878

Quoted: 3/25/2022
Expiration: 4/25/2022

Item	Manufacturer	Est. Lead Time	Qty	Unit Price	Extended
5603F/5A08AXP P/N: 5603F/5A08AXP 3” PV with HW	Val-Matic		6	$947.76	$5,686.56
5604F/5A08XP P/N: 5604F/5A08XP 4” PV with HW	Val-Matic		1	$947.76	$947.76
5618F/5M24XP P/N: 5618F/5M24XP 18” PV with HW	Val-Matic		2	$4,569.35	$9,138.70

Subtotal	$144,418.94
Total Tax	$0.00
Shipping Cost (Freight LTL)	$0.00
Total	$144,418.94

A 4% fee will be charged for Credit Card Orders

All sales order related transactions with Instrumentation and Controls, LLC shall be governed by Instrumentation and Controls, LLC’s Standard Sales Terms and Conditions (IAC Terms) which are subject to modification. Please visit http://instandcontrols.com/terms for the most up to date IAC Terms. Any contracts or agreements which are currently in place shall apply and will not be replaced by the IAC Terms.

JIFCO, INC OF TEXAS
FABRICATED PIPING

204 CR 238
Kosse Texas 76653
Phone: (254) 587-2245
Fax: (254) 587-2092

March 21, 2022

All Bidders

Re: City of Chandler
Reclaimed Water Interconnect Facility

Bid Date: 23 March 2022 @ 2:00 PM

***** Chandler Base Bid Stainless-Steel with Options 1 & 2 Scope *****

We are pleased to offer our quotation for the stainless-steel pipe and fittings on the above-referenced project per plans, specification as follows:

Stainless-Steel Base Bid Piping

1. 12" & 10" Stainless-Steel Air Piping begins at Flanged connection to Two Blower at Rubber Expansion Couplings (Provided by Others) as Shown on Sheets M-1.82, M-1.83, and M-1.84 continuing to Membrane Facility as Shown on Sheets C-1.23 & C-1.24 to termination at Flanged connections at Three 12" Tee's and One 12" Elbow at Train's 2, 3 & 4 as all Shown on Sheets M-1.43 & M-1.45. Please Note: Jifco included Flange Connection for Piping between the Blower Room and the Membrane Facility for No Field Welds.

Total Lump Sum Price for Base Bid- $251,978.00

JIFCO, INC OF TEXAS
FABRICATED PIPING

204 CR 238
Kosse Texas 76653
Phone: (254) 587-2245
Fax: (254) 587-2092

CERTIFIED ISO 9001:2015

STEEL PLATE FABRICATORS ASSOCIATION FOUNDED 1933

Option 1 (Bid Item 1)

- 24" S/10S 316L Permeate Header with four 12" s/10s 316L branches that tie into the permeate/back pulse pumps and continue to terminate into the 16" s/10s 316L underground suction header. The 24" S/10S 316L Permeate Header also has four 16" S/10S 316L lines that start at a 16" S/10S 316L tee and terminates at the insulating flange. The 24" S/10S 316L Permeate Header connects at a ductile iron transition and terminates into CIP Tank and it reduces to 16" S/10S 316L and terminates into the Back pulse tank as shown on drawing M-1.45.
- 12" S/10S 316Lline that starts at a ductile iron transition point, continues thru the CIP pumps, and has two line that terminates into the CIP tank, and it also has and underground line that ties the four-membrane tank feed lines that terminate at the 24" membrane tank drain manifold as shown on drawing M-1.41.

Total Lump Sum Price for Option 1 (Bid Item 1) - $1,141,638.00

Option 2 (Bid Item 2)

- 12" S/10S 316Lline that starts at a ductile iron transition point, continues thru the CIP pumps, and has two line that terminates into the CIP tank, and it also has and underground line that ties the four-membrane tank feed lines that terminate at the 24" membrane tank drain manifold as shown on drawing M-1.41.

Total Lump Sum Price for Option 2 (Bid Item 2) - $845,320.00

JIFCO, INC of TEXAS
FABRICATED PIPING

204 CR 238
Kosse Texas 76653
Phone: (254) 587-2245
Fax: (254) 587-2092

Please note the following:

- The above is furnished including elbows, reducers, tees, caps, flanges, blind flanges, flanged outlets, threaded outlets, sleeve type couplings, flanged coupling adapters, split sleeve couplings, harness assemblies, wall spools, weep rings, and anchor rings.

- The above price does not include unless noted otherwise: valves, non-mating flange insulation kits, valve bolting, mating and non-mating bolt, nut & gasket sets, flow meters, back flow preventers, pumps, pipe supports, pipe hangers, pipe straps, PVC pipe, copper pipe, and ductile iron pipe.

- Shop drawings and submittals are included in the above pricing.
- Some Materials Provided May Contain "Foreign" Products.

Certifications and Capabilities

- Jifco, Inc. of Texas is an SPFA certified fabricator and an LRQA ISO 9001-2008 company.
- AWS Certified Welding Inspector
- NACE Level 3 Inspector
- SNT-TC-1A Level 2 Inspectors (UT)
- In House SNT-TC-1A Level 2 Inspectors (PT, and MT)

JIFCO, INC of TEXAS
FABRICATED PIPING

204 CR 238
Kosse Texas 76653
Phone: (254) 587-2245
Fax: (254) 587-2092

CERTIFIED ISO 9001:2015

STEEL PLATE FABRICATORS ASSOCIATION FOUNDED 1933

Payment Terms and Conditions

- The price is good for 1 week from Bid Date.
- Full payment of the invoiced amount is due 30 days after the invoice date. No retention is allowed.
- All proposals and sales are subject to approval of credit.
- The material is quoted F.O.B. Kosse Texas, with full freight allowed to the jobsite. Freight allowance is based upon shipments in full truckload quantities. Less than full truckloads and emergency shipments are for the buyer's account.
- Sales tax has not been included and will be charged in addition to the prices quoted.

Thank you,

Rick Pastor
Jifco, Inc. of Texas
254-587-2245

Karber Mechanical Insulation, Inc.

REVISED BID PROPOSAL

To:	**McCarthy Building Co.**	***Project:***	***Chandler Reclaimed Water Interconnect Facility***
Address:	6225 N. 24th St., Ste. 200 Phoenix, AZ 85016	Bid No.:	22-0220 R1
Phone:	480.449.4700	Date:	March 29, 2022
Attn:	**Austin Hancock**	Pages:	2

This Proposal was prepared in accordance with the following documents:

Specification Section(s): N/A N/A

Plans Dated: February / 2022 Addenda Noted: 1, 2

Plumbing Insulation

Insulation of process air supply pipe:		**$39,501**
For sales tax by KMI:	ADD	**$ 2,007**

Project-Specific Clarifications:

- Price based on process air supply pipe as highlighted on drawing dated 2/22 by McCarthy insulated with 2-inch fiberglass thicknesses as requested.
- Price valid for 10 days due to material escalation industry-wide.
- Price includes .016 aluminum jacketing on piping insulation exposed to weather.
- Price excludes insulation of underground piping.
- Price excludes insulation of systems not specifically mentioned above.
- Price excludes overtime labor and/or shift differential.
- Price excludes Davis Bacon wages.
- Price excludes bond cost.

Karber Mechanical Insulation, Inc.

Les Jaeger

Standard Proposal Clarifications

- Unless specifically stated otherwise on the front page of this Proposal, hard sections to be provided on piping 2-1/2" in diameter and larger only.
- KMI will not guarantee any below-ambient piping system where rising stems are not provided on valves.
- This proposal is based on a normal 40-hour week. No shift work or premium time has been included.
- KMI must be provided a complete set of contract documents upon award of contract.
- No retention to be withheld on projects with a contract amount less than $5,000. Retention held on projects larger than $5,000 to be paid within 30 days after completion of work.
- Adequate area must be provided for the lay down, staging, and storage of KMI materials.
- Temporary facilities within the project, such as light, power, heat, drinking water, and toilets are to be provided at locations convenient to the work at no cost to KMI.
- All trash generated by KMI to be taken to a designated point on site for removal by others at no cost to KMI.
- Any scaffolding required shall be provided by others.
- All permits, taxes, and fees will be paid by others.
- Davis Bacon wages not included in this proposal unless specifically identified in the Project Specific Clarifications above.
- Standard KMI Exclusions:
  Patching and Repair Due to Damage by Others, Demolition, Protection of Work in Place, Insulation of Hangers/Supports, Painting, Fire Sprinkler Pipe Insulation, Grooved Fittings, Firestopping, Labeling/Stenciling, Heat Tracing, Underground Pipe Insulation, Chiller Insulation, Abatement, Handicapped Lavatory Kits, Exterior Insulation of Lined Ductwork, Exhaust Ducts, Duct Lining, Diffuser Insulation, Mixed Air Plenums on AHU's, Breeching/Flues, Flex Duct to Diffusers, Equipment, Emergency Generator Exhaust Systems.

MILLER
INSULATION CO, INC

9040 WEST LARKSPUR DRIVE, SUITE 138
PEORIA, AZ 85381
PH: (623) 434 – 8517

March 16, 2022

TO: Estimating

RE: City of Chandler Reclaimed Water Interconnect Facility

Miller Insulation thanks you for the opportunity to present our proposal on the above referenced project. In preparing our proposal, we utilized the project prints dated 02/2022 & specification 15260.00. NO addenda have been acknowledged.

We propose to supply the labor and material required to insulate the following:

- **NEW PIPE: SS Process Supply Air Pipe 2" thick fiberglass insulation with PVC jacket exposed to view in mechanical rooms, and aluminum jacket exposed outside.**
  - ***We HAVE included piping inserts/shields (WE supply & YOU install)***
  - *We have included PVC / aluminum jacketing.*
  - *We have NOT included refrigeration piping.*
  - *We have NOT included heat tracing of pipes.*
- **We have not included firestop, acoustic penetration sealant, or painting in our bid.**

Our price to perform this work will be:

Pipe: **$29,250.00**

This quote is valid for 45 days from bid date. Questions regarding this proposal should be directed to me at (623) 434-8517.

Thank you,

Bob Conrad General Manager
Miller Insulation Arizona Branch

QUOTE

Quote Date: February 18, 2022 REV 1

Project: RWIF MEMBRANE FACILITY

Bid Date: 3/23/2022

Agency: CITY OF CHANDLER AZ

Contractor: McCARTHY BUILDERS - CMAR

Professional Piping Systems LLC is pleased to offer a quote for the above referenced project.

Pricing Table					
Item	**Qty.**	**Unit**	**Description**	**Unit Price**	**Total**
1	1	**LS**	**MEMBRANE FACILITY**		
			OPTION 1	**$1,421,538.41**	**$1,421,538.41**
	20	LF	10" SS 316 SCH 10S		
	240	LF	12" SS 316 SCH 10S		
	20	LF	14" SS 316 SCH 10S		
	80	LF	16" SS 316 SCH 10S		
	240	LF	24" SS 316 SCH 10S		
	14	EA	10" SPOOLS		
	43	EA	12" SPOOLS		
	2	EA	14" SPOOLS		
	5	EA	16" SPOOLS		
	14	EA	24" SPOOLS		
	4	EA	10" SLIP-ON FLANGE ENDS		
	118	EA	12" SLIP-ON FLANGE ENDS		
	15	EA	14" SLIP-ON FLANGE ENDS		
	35	EA	16" SLIP-ON FLANGE ENDS		
	27	EA	24" SLIP-ON FLANGE ENDS		
	2	EA	12" 45^ LR ELBOW		
	7	EA	12" 90^ SR ELBOW		
	6	EA	16" 90^ SR ELBOW		
	1	EA	24" 90^ SR ELBOW		
	3	EA	12"X12" TEE		
	3	EA	16"X 16" TEE		
	3	EA	24"X 24" TEE		
	24	EA	24"X 12" REDUCING TEE		
	4	EA	12" X 10" CONCENTRIC REDUCER		

406 E. Pioneer Street Phoenix, AZ 85040 phone: (602) 497-4997 fax: (602) 497-4907 www.ppsphx.com

	4	EA	14" X 12" CONCENTRIC REDUCER		
	6	EA	16" X 12" CONCENTRIC REDUCER		
	4	EA	24" X 12" CONCENTRIC REDUCER		
	1	EA	24" X 16" CONCENTRIC REDUCER		
	4	EA	12" LUG HARNESS RING-ALL THREADS, NUTS AND WASHERS BY OTHERS		
	2	EA	16" LUG HARNESS RING-ALL THREADS, NUTS AND WASHERS BY OTHERS		
	4	EA	24" LUG HARNESS RING-ALL THREADS, NUTS AND WASHERS BY OTHERS		
2	1	LS	**OPTION 2**	**$1,002,395.00**	**$1,002,395.00**
	20	LF	10" SS 316 SCH 10S		
	107	LF	12" SS 316 SCH 10S		
	20	LF	14" SS 316 SCH 10S		
	140	LF	24" SS 316 SCH 10S		
	14	EA	10" SPOOLS		
	43	EA	12" SPOOLS		
	2	EA	14" SPOOLS		
	14	EA	24" SPOOLS		
	4	EA	10"SLIP-ON FLANGE ENDS		
	99	EA	12" SLIP-ON FLANGE ENDS		
	15	EA	14" SLIP-ON FLANGE ENDS		
	27	EA	24" SLIP-ON FLANGE ENDS		
	2	EA	12" 45^ LR ELBOW		
	7	EA	12" 90^ SR ELBOW		
	6	EA	16" 90^ SR ELBOW		
	1	EA	24" 90^ SR ELBOW		
	3	EA	12"X12" TEE		
	24	EA	24"X 12" REDUCING TEE		
	4	EA	12" X 10" CONCENTRIC REDUCER		
	4	EA	14" X 12" CONCENTRIC REDUCER		
	4	EA	24" X 12" CONCENTRIC REDUCER		
	4	EA	12" LUG HARNESS RING -ALL THREADS, NUTS AND WASHERS BY OTHERS		
	4	EA	24" LUG HARNESS RING ALL THREADS, NUTS AND WASHERS BY OTHERS		

General Specifications:

- Quote is based on the CONTRACTOR'S request and detail drawing.

406 E. Pioneer Street Phoenix, AZ 85040 phone: (602) 497-4997 fax: (602) 497-4907 www.ppsphx.com

Terms & Conditions

Pricing:

1. Prices are firm 10 days from the date of this quotation. After 10 days, prices are subject to revisions based on price and availability of materials in effect at time of order.
2. The above prices are based on Buyer's acceptance of this **entire** proposal.
3. Quantities contained in this quotation are approximate and are used for project bidding purposes. Unit prices govern; extensions for pricing are for information only. The actual billable quantities shall be determined by the Seller's layout, and the Buyer will be invoiced accordingly.
4. Any revisions to the scope of work may necessitate a price revision and an approved change order prior to the revision being effective.
5. Seller's pricing excludes all duty, federal, state or local sales taxes of any kind.
6. Payment Terms are Net (30) thirty days from date of invoice. Final acceptance of all orders is subject to approval by Seller's standard credit policy. Seller reserves the right to stop delivery on any project which has outstanding invoices not paid within 60 sixty days of invoice date. No retention is allowed. Seller will file intent to file bond claim and/or intent to lien on all projects.

Exclusions –

Unless specifically stated in the scope of the work above.

1. Off-loading of pipe and installation.

Damages:

1. Seller will not recognize back-charges of any kind that are caused by trucking delays, Seller supplier delays, weather, or items beyond Seller's control. Seller must be notified of all problems to participate in and/or approve any corrective action. Any claim must be received by the Seller in writing, within 7 calendar days from date of occurrence.
2. Seller will not be held liable for liquidated damages of any kind.

Seller: Professional Piping Systems

By: _____ Date: _____

Authorized Signature

By: _____

Printed name

Buyer: _____

By: _____ Date: _____

Authorized Signature

By: _____

Printed name

406 E. Pioneer Street Phoenix, AZ 85040 phone: (602) 497-4997 fax: (602) 497-4907 www.ppsphx.com

PREMIER
MECHANICAL INSULATION
Safety • Dependability • Integrity

Company: ***McCarthy Building Companies***	*Project:* ***Chandler Reclaimed Water Interconnect Facility***	
Address: ***6225 N. 24th St. Suite 200***	*Date:* ***March 23, 2022***	
Phoenix, AZ 85016	*Specification Section:* ***15260***	
Phone: ***480-449-4733***	*Plans Dated:* ***February 2022***	*Addenda:* ***N/A***
Contact: ***Estimating***	*Proposal No.* ***22-0273***	

Premier Mechanical Insulation respectfully submits the following:

For insulation of high temperature process air piping:

$ 51,785

Qualifications:

- High temperature process air piping to be insulated with 2" thick fiberglass pipe covering.
- Includes .016 stucco-embossed aluminum jacketing on piping insulation exposed to the weather.
- Price excludes overtime labor, weekend labor and/or shift differential.
- Price excludes Davis Bacon wages, bond costs and sales tax.
- Price valid for (60) days from date of proposal.

Premier Mechanical Insulation Standard Clarifications

1. Payment due for materials stocked onsite or in an approved warehouse.
2. Protection of work is to pass to the general contractor after the completion of each phase of work.
3. Work to proceed sequentially with areas free of debris and obstacles to provide efficient productivity.
4. All hoisting and dump bins are to be provided by the general contractor at no cost to PMI.
5. No retention to withheld on projects with a contract amount less of $5, 000.
6. Retention to be release upon completion of PMI's scope of work.
7. Insulation and warranty of existing systems is excluded.
8. PMI must be provided a complete current set of documents upon award of contract.
9. Any scaffolding required shall be provided by others.
10. All permits, taxes and fees to be provided by others.
11. **Standard Exclusions -** Existing piping/ducts except POCs, underground piping, chiller bodies, fire stop penetrations, transfer ducts, plenum lining, flex ducts, all conditioned space ducts, damage to T-bar grid, lined duct, linear diffusers, duct lining, fire wrap on top of hood, grease duct access doors, grease duct cutting of Access doors, drain assembles, plumbing storage tanks, waiver of subrogation.

Premier Mechanical Insulation

Michael Norton
Owner / CEO
michael@pmi-az.com
c. 602.828.7805

Company: **RYAN HERCO**
Jobname: **Chandler RWIF GMP**
Pricing Due: **3/25/22 5:00 P.M.**
DO NOT INSERT OR DELETE ROWS
IF NEW ROWS ARE NEEDED, USE ROWS AT END OF LIST

Total
Subtotal

Size	Description	Count	Bid Price	Total Bid Price	Filter	Notes
2	Sch 80 PVC PE Pipe	2-LF	$ 2.41	$ 4.82	PVC	
4	Sch 80 PVC PE Pipe	17-LF	$ 6.94	$ 117.98	PVC	
1/4	Sch 80 CPVC PE Pipe	696-LF	$ 1.35	$ 939.60	CPVC	
1/2	Sch 80 CPVC PE Pipe	249-LF	$ 1.36	$ 338.64	CPVC	
3/4	Sch 80 CPVC PE Pipe	179-LF	$ 1.87	$ 334.73	CPVC	
1	Sch 80 CPVC PE Pipe	925-LF	$ 2.79	$ 2,580.75	CPVC	
1	Sch 80 CPVC PE Pipe ~	22-LF	$ 2.79	$ 61.38	CPVC	
1-1/2	Sch 80 CPVC PE Pipe	483-LF	$ 4.62	$ 2,231.46	CPVC	
1-1/2	Sch 80 CPVC PE Pipe ~	23-LF	$ 4.62	$ 106.26	CPVC	
2	Sch 80 CPVC PE Pipe	48-LF	$ 6.41	$ 307.68	CPVC	
2-1/2	Sch 80 CPVC PE Pipe	28-LF	$ 9.70	$ 271.60	CPVC	
3	Sch 80 CPVC PE Pipe	37-LF	$ 12.05	$ 445.85	CPVC	
3	Sch 80 CPVC PE Pipe ~	19-LF	$ 12.05	$ 228.95	CPVC	
12	Sch 80 CPVC PE Pipe	329-LF	$ 121.16	$ 39,861.64	CPVC	
24	Sch 80 CPVC PE Pipe	132-LF	$ 548.22	$ 72,365.04	CPVC	
1/4	316 SS .065 Tubing	42-LF	$ 2.40	$ 100.80	SMALL BORE	
1	SS A312 316L Pipe Sch 40 T&C	599-LF	$ 14.53	$ 8,703.47	SMALL BORE	
2x1	304 SS 150# Thd Hex Bushing	15	$ 12.49	$ 187.35	SMALL BORE	
1	316 SS 150# Thd 90 Ell	60	$ 6.53	$ 391.80	SMALL BORE	
1	316 SS 150# Thd Tee	40	$ 8.62	$ 344.80	SMALL BORE	
1	316 SS 150# Thd Union	42	$ 16.92	$ 710.64	SMALL BORE	
1x1/4	316 SS 150# Thd Hex Bushing	42	$ 4.37	$ 183.54	SMALL BORE	
1/2	CPVC Sch 80 90 Ell	64	$ 1.47	$ 94.08	CVPC	
3/4	CPVC Sch 80 90 Ell	10	$ 1.88	$ 18.80	CPVC	
3/4	CPVC Sch 80 90 Ell ~	4	$ 1.88	$ 7.52	CPVC	
1	CPVC Sch 80 90 Ell	176	$ 2.98	$ 524.48	CPVC	
1	CPVC Sch 80 90 Ell ~	4	$ 2.98	$ 11.92	CPVC	
1-1/2	CPVC Sch 80 90 Ell	54	$ 7.20	$ 388.80	CPVC	
1-1/2	CPVC Sch 80 90 Ell ~	8	$ 7.20	$ 57.60	CPVC	
2	CPVC Sch 80 90 Ell	37	$ 8.69	$ 321.53	CPVC	
2-1/2	CPVC Sch 80 90 Ell	38	$ 20.01	$ 760.38	CPVC	
3	CPVC Sch 80 90 Ell	21	$ 22.65	$ 475.65	CPVC	
12	CPVC Sch 80 90 Ell	12	$ 1,394.61	$ 16,735.32	CPVC	
3	CPVC Sch 80 45 Ell	6	$ 24.56	$ 147.36	CPVC	

12	CPVC Sch 80 45 Ell	2	$ 1,271.23	$ 2,542.46	CPVC	
1/4	CPVC Sch 80 Tee	1	$ 3.45	$ 3.45	CPVC	
1/2	CPVC Sch 80 Tee	16	$ 3.45	$ 55.20	CPVC	
3/4	CPVC Sch 80 Tee	5	$ 3.51	$ 17.55	CPVC	
3/4	CPVC Sch 80 Tee ~	1	$ 3.51	$ 3.51	CPVC	
1	CPVC Sch 80 Tee	26	$ 4.30	$ 111.80	CPVC	
1	CPVC Sch 80 Tee ~	2	$ 4.30	$ 8.60	CPVC	
1-1/2	CPVC Sch 80 Tee	15	$ 10.40	$ 156.00	CPVC	
1-1/2	CPVC Sch 80 Tee ~	2	$ 10.40	$ 20.80	CPVC	
2	CPVC Sch 80 Tee	17	$ 11.58	$ 196.86	CPVC	
2-1/2	CPVC Sch 80 Tee	7	$ 29.46	$ 206.22	CPVC	
3	CPVC Sch 80 Tee	2	$ 29.46	$ 58.92	CPVC	
12	CPVC Sch 80 Tee	9	$ 1,717.98	$ 15,461.82	CPVC	
12	CPVC Sch 80 Coupling	9	$ 450.36	$ 4,053.24	CPVC	
24	CPVC Sch 80 Coupling	4	$ 5,129.24	$ 20,516.96	CPVC	
1/4	CPVC Sch 80 Union w/Viton O-Ring	8	$ 10.03	$ 80.24	CPVC	
1/2	CPVC Sch 80 Union w/Viton O-Ring	12	$ 6.67	$ 80.04	CPVC	
3/4	CPVC Sch 80 Union w/Viton O-Ring	5	$ 6.97	$ 34.85	CPVC	
1	CPVC Sch 80 Union w/Viton O-Ring	20	$ 8.37	$ 167.40	CPVC	
1x1/2	CPVC Sch 80 Reducer Coupling	1	$ 5.80	$ 5.80	CPVC	
1-1/2x3/4	CPVC Sch 80 Reducer Coupling	1	$ 13.18	$ 13.18	CPVC	
1-1/2x1	CPVC Sch 80 Reducer Coupling	11	$ 13.18	$ 144.98	CPVC	
2x1/2	CPVC Sch 80 Reducer Coupling	1	$ 17.43	$ 17.43	CPVC	
2x1	CPVC Sch 80 Reducer Coupling	3	$ 17.43	$ 52.29	CPVC	
2x1-1/2	CPVC Sch 80 Reducer Coupling	4	$ 17.43	$ 69.72	CPVC	
2-1/2x1-1/2	CPVC Sch 80 Reducer Coupling	3	$ 19.85	$ 59.55	CPVC	
3x1	CPVC Sch 80 Reducer Coupling ~	2	$ 49.08	$ 98.16	CPVC	
3x2	CPVC Sch 80 Reducer Coupling	7	$ 40.09	$ 280.63	CPVC	
14x12	CPVC Sch 80 Reducer Coupling	2	$ 942.60	$ 1,885.20	CPVC	
24x12	CPVC Sch 80 Reducer Coupling	4	$ 6,105.87	$ 24,423.48	CPVC	
3	CPVC Sch 80 Plug ~	2	$ 14.14	$ 28.28	CPVC	
1x1/2	CPVC Sch 80 Reducing Tee	1	$ 8.88	$ 8.88	CPVC	
2-1/2x1-1/2	CPVC Sch 80 Reducing Tee	4	$ 24.81	$ 99.24	CPVC	
24x12	CPVC Sch 80 Reducing Tee	20	$ 11,667.80	$ 233,356.00	CPVC	
3	CPVC Sch 80 Grooved Cplg Adapter	1	$ 24.31	$ 24.31	CPVC	
1-1/2	CPVC Sch 80 Union w/EPDM O-Ring	2	$ 17.03	$ 34.06	CPVC	
2-1/2	CPVC Sch 80 Union w/EPDM O-Ring	1	$ 46.73	$ 46.73	CPVC	
2	PVC Sch 80 90 Ell	2	$ 2.87	$ 5.74	PVC	
4	PVC Sch 80 90 Ell	2	$ 11.49	$ 22.98	PVC	
4	PVC Sch 80 Tee	1	$ 16.11	$ 16.11	PVC	
2	PVC True Union Solv Weld Ball	2	$ 79.51	$ 159.02	VALVE - PVC BALL	viton/hayward

4	PVC True Union Solv Weld Ball	1	$ 263.44	$ 263.44	VALVE - PVC BALL	
1	CPVC Solvent Weld Ball Valve	30	$ 55.10	$ 1,653.00	VALVE - CPVC BALL	Vtion Hayward
1/2	CPVC True Union Solv Weld Ball	29	$ 36.26	$ 1,051.54	VALVE - CPVC BALL	
3/4	CPVC True Union Solv Weld Ball	5	$ 45.05	$ 225.25	VALVE - CPVC BALL	hayward
1	CPVC True Union Solv Weld Ball	19	$ 55.10	$ 1,046.90	VALVE - CPVC BALL	
1	CPVC True Union Solv Weld Ball ~	2	$ 55.10	$ 110.20	VALVE - CPVC BALL	
1-1/2	CPVC True Union Solv Weld Ball	12	$ 91.25	$ 1,095.00	VALVE - CPVC BALL	hayward
1-1/2	CPVC True Union Solv Weld Ball ~	4	$ 91.25	$ 365.00	VALVE - CPVC BALL	
2	CPVC True Union Solv Weld Ball	30	$ 125.27	$ 3,758.10	VALVE - CPVC BALL	
2-1/2	CPVC True Union Solv Weld Ball	17	$ 332.86	$ 5,658.62	VALVE - CPVC BALL	hayward
3	CPVC True Union Solv Weld Ball	2	$ 361.96	$ 723.92	VALVE - CPVC BALL	
1/2	CPVC Solvent Weld Check Valve	8	$ 52.52	$ 420.16	VALVE - CPVC CHECK	viton/hayward
3/4	CPVC Solvent Weld Check Valve	1	$ 61.87	$ 61.87	VALVE - CPVC CHECK	
1	CPVC Solvent Weld Check Valve	3	$ 74.44	$ 223.32	VALVE - CPVC CHECK	
1-1/2	CPVC Solvent Weld Check Valve	5	$ 128.94	$ 644.70	VALVE - CPVC CHECK	
1-1/2	CPVC Solvent Weld Check Valve ~	1	$ 128.94	$ 128.94	VALVE - CPVC CHECK	
3	CPVC Solvent Weld Check Valve	1	$ 448.39	$ 448.39	VALVE - CPVC CHECK	
1/2	CPVC Solvent Weld Diaphragm Valv	1	$ 179.42	$ 179.42	CPVC - DIAPHRAGM VALVE	CPVC/Teflon/gf
1/2	CPVC True Union Solv Weld Diaphr	2	$ 179.42	$ 358.84	CPVC - DIAPHRAGM VALVE	
1	316 SST Bolt 1/8" Neo Gskt Kit	3	$ 5.38	$ 16.14	BNG	
2	316 SST Bolt 1/8" Neo Gskt Kit	3	$ 8.65	$ 25.95	BNG	
4	316 SST Bolt 1/8" Neo Gskt Kit	5	$ 15.91	$ 79.55	BNG	
12	316 SST Bolt 1/8" Neo Gskt Kit	6	$ 57.64	$ 345.84	BNG	
1	150# Sch 80 CPVC SW Flange	3	$ 7.36	$ 22.08	CPVC	
4	150# Sch 80 CPVC SW Flange	2	$ 35.40	$ 70.80	CPVC	
1/2	150# Sch 80 CPVC VS PR Flange	6	$ 6.59	$ 39.54	CPVC	
1	150# Sch 80 CPVC VS PR Flange	2	$ 7.36	$ 14.72	CPVC	
1	150# Sch 80 CPVC VS PR Flange ~	2	$ 7.36	$ 14.72	CPVC	
1-1/2	150# Sch 80 CPVC VS PR Flange	6	$ 9.98	$ 59.88	CPVC	
2	150# Sch 80 CPVC VS PR Flange	6	$ 12.08	$ 72.48	CPVC	
2-1/2	150# Sch 80 CPVC VS PR Flange	6	$ 25.03	$ 150.18	CPVC	
3	150# Sch 80 CPVC VS PR Flange	3	$ 26.21	$ 78.63	CPVC	
12	150# Sch 80 CPVC VS PR Flange	36	$ 1,260.23	$ 45,368.28	CPVC	
24	150# Sch 80 CPVC VS PR Flange	8	$ 3,679.86	$ 29,438.88	CPVC	
2	150# Sch 80 PVC Solv Weld Flange	2	$ 7.34	$ 14.68	PVC	
1/4	CPVC Sch 80 Coupling	20	$ 4.00	$ 80.00	CPVC	
1/2	CPVC Sch 80 Coupling	5	$ 1.55	$ 7.75	CPVC	
3/4	CPVC Sch 80 Coupling	6	$ 2.17	$ 13.02	CPVC	
1	CPVC Sch 80 Coupling	18	$ 2.92	$ 52.56	CPVC	
1-1/2	CPVC Sch 40 Coupling	15	$ 5.52	$ 82.80	CPVC	
12	CPVC Sch 80 Coupling	3	$ 366.39	$ 1,099.17	CPVC	

1/2x1-1/2	304 SS Sch 40 Nipple TxT	30	$ 1.56	$ 46.80	SMALL BORE
1/2x2	304 SS Sch 40 Nipple TxT	22	$ 1.88	$ 41.36	SMALL BORE
1x2	304 SS Sch 40 Nipple TxT	30	$ 2.88	$ 86.40	SMALL BORE
1x3	304 SS Sch 40 Nipple TxT	15	$ 3.99	$ 59.85	SMALL BORE
			$ 38,502.42	**$ 550,788.58**	

Chandler RWI Facility GMP 2
McCarthy
Quote: 22033
Quote Date: 3/29/2022
Pipe Support Estimator: Jesse Goens (385) 557-6912

Bid Description

The following scope is for SAC to furnish a complete Pipe Support System as outlined below and highlighted in the Redlines provided. All material shall be delivered to the project site in a finished state ready for turnkey installation. SAC shall provide the final design, field confirmation and certification for the piping supports, seismic restraints, and related work, as specified.

Pipe Support Systems (3" and larger)

A. Inclusions

a. Design & Engineering:

i. Final Design and Engineering to provide a complete support system in conformance to Specification Section 15140
ii. Support System design shall be by a Professional Engineer licensed in the state of Arizona. The proposed support system engineer shall have at least 5 years' experience in the analysis and design of similar systems.
iii. SAC shall design all supports to meet the seismic and wind requirements for the project.
iv. Submittals – Proper CAD files of Contract Drawings included in the Redline set are required.
    1. 12 weeks after contract execution and receipt of proper CAD files in .dwg format.
    2. 14 weeks after contract execution if proper CAD files are not available. (See Cost Adder in Pricing Section)
v. Only electronic copies of submittals will be supplied, no hard copies.

b. Fabrication & Delivery

i. Fabrication & Delivery of all necessary Pipe Supports (3" and larger), Hardware, Anchorage and Ancillary Items to support all process piping.
ii. Support, Hardware & Anchor Materials are as follows:

AREA	SUPPORT MATERIAL	HARDWARE MATERIAL	ANCHOR MATERIAL
Interior & Exterior	Carbon Steel (Primed)	316SS	316SS
Submerged & Stainless Steel Pipe	316SS	316SS	316SS
Chemical	316SS	316SS	316SS

iii. Supports are to be individually tagged, shipped, and crated based upon Layout of Pipe Supports for ease of installation.
iv. All Anchorage and Hardware for SAC provided supports has been included in this proposal.
v. Fabrication & Shipment of Pipe Supports – 10-12 weeks after release by client. Due to current market volatility, SAC's standard lead times for fabrication and procurement are extending due to material availability. The material availability will be determined when submittals are approved for the respective area.

B. Notes

a. We have included "1" site visits for coordination and to fulfill the project requirements.
b. This quote is based on "3" shipments.

C. Exclusions

a. Structural/Misc. Metal items to be supplied by others
b. Plumbing/HVAC/Fire Suppression Supports
c. Supply of Small Bore Supports (2-1/2" and less) & Chemical Trench Pipe
d. Temporary Supports
e. Insulation inserts such as Cal-Sil, and/or pipe shields for supports in contact with pipe insulation
f. Supports called off as concrete
g. Supports called off as Ductile Iron Base Elbows or Base Tees
h. Pipe Supports for Diffuser Piping, supplied by Diffuser Manufacturer
i. Nitric Acid Passivation: Passivation for Stainless Steel Supports shall be Citric Acid. The Citric Acid process is more environmentally friendly, safer, and less toxic method.
j. Undercut, Hastelloy, Titanium anchors. See material schedule above.
k. Third party special inspections
l. BIM/3D modeling; If required, SAC can provide at an additional cost.
m. Top/Finish coat of Carbon Steel supports

DESCRIPTION	REDLINE DRAWINGS	PRICING
Pipe Support System (3" & larger):	Pipe Support Link	**$375,000**

Adder – Submittal Drawings (If contract drawings are not provided in .dwg format) **$2,000**

Terms of Payment:

1) 2% 10 Net 30.
   a. 10% to be billed as Engineering upon Submittal of Design for each Area
   b. 10% to be billed as Engineering upon Approval of Design for each Area
   c. 75% to be billed as Material upon delivery
   d. 5% to be billed as Shipping upon delivery
2) Retention (if held) is to be released no later than 90 days after invoice date that it was withheld.

Pricing Notes:

1) *Addenda 1 & 2 have been received*
2) *Price is exclusive of any local, state, or federal taxes.*
3) *No retainage, back charges, or withholds.*
4) *Does not include Bond*
5) *Based on drawings dated: 02/2022*
6) *Due to the volatility in the current metals market, material pricing is only good through 04/05/2022*
7) *AIS or Buy America(n) is EXCLUDED*

PRATT®

a MUELLER brand

401 S. HIGHLAND AVENUE, AURORA, IL 60506
TEL: (630) 844-4000 FAX:

Please reference job name or quote number
on all purchase orders related to this quotation.

Date: March 24, 2022
Proposal #: Q-022-25951 **Rev:** 0
Project Name: Reclaimed Water Interconnect Facility
Project Location: Chandler, AZ

TO: All Bidding Contractors

Phone: TBD
Fax:TBD

Bid Date: 03/25/2022 5:00pm

This quotation reflects our policy of sourcing materials in the most cost effective manner. Any requirement for a specific US content may require a revised quotation.

We are pleased to submit the following proposal for your consideration:

ITEM	QTY	DESCRIPTION	UNIT PRICE	EXTENDED
1	2	12" Flange 150B Butterfly Valve, EPDM Seat, DI Body, DI Disc, 316SS Shaft, Nylatron Bearing, MDT2S HW w/ Indicator Open Left , 8 Mils Amerlock 2 Epoxy Interior, 8 Mils Amerlock 2 Epoxy Exterior, 316SS Hardware	$ 1,775.40	$ 3,550.80
2	4	12" Flange 150B Butterfly Valve, EPDM Seat, DI Body, DI Disc, 316SS Shaft, Nylatron Bearing, Kinetrol Pneumatic Vane Actuator , 8 Mils Amerlock 2 Epoxy Interior, 8 Mils Amerlock 2 Epoxy Exterior, 316SS Hardware ****Pneumatic Actuator quoted without the benefit of specification.** ****Quoted with a Double Acting actuator. If Spring Return is required, adder is $12,105 each**	$ 6,402.55	$ 25,610.20
3	1	16" Flange 150B Butterfly Valve, EPDM Seat, DI Body, DI Disc, 316SS Shaft, Nylatron Bearing, MDT3S HW w/ Indicator Open Left , 8 Mils Amerlock 2 Epoxy Interior, 8 Mils Amerlock 2 Epoxy Exterior, 316SS Hardware	$ 3,397.90	$ 3,397.90
4	11	Tags: BFV-RW-103, BFV-RW-202, BFV-RW-302, BFV-RW-009, BFV-RW-010, 6 have no tag # 18" Flange 150B Butterfly Valve, EPDM Seat, DI Body, DI Disc, 316SS Shaft, Nylatron Bearing, MDT4S HW w/ Indicator Open Left , 8 Mils Amerlock 2 Epoxy Interior, 8 Mils Amerlock 2 Epoxy Exterior, 316SS Hardware	$ 3,671.25	$ 40,383.75
5	5	Tags: BFV-RW-011, BFV-507, BFV-509, BFV-508, 1 has no tag # 24" Flange 150B Butterfly Valve, EPDM Seat, DI Body, DI Disc, 316SS Shaft, Teflon Lined Fiberglass Backing Bearing, MDT4S HW w/ Indicator Open Left , 8 Mils Amerlock 2 Epoxy Interior, 8 Mils Amerlock 2 Epoxy Exterior, 316SS Hardware	$ 6,857.95	$ 34,289.75
6	1	2" 8001A Swing Check Valve, Full Water Way, Flange Ends, Cast Iron Body, 316SS Body Seat Ring, BUNA-N Disc Seat Ring, Single Lever & Spring, 316 SS Hinge Pin, 316 SS Cover Bolts, 8 Mils Interior and Exterior Epoxy Paint **Hinge pin on all swing check valves is 316SS in LIEU of 17-4SS**	$ 846.45	$ 846.45
7	3	18" 8001A Swing Check Valve, Full Water Way, Flange Ends, Cast Iron Body, 316SS Body Seat Ring, BUNA-N Disc Seat Ring, Single Lever & Spring, 316 SS Hinge Pin, 316 SS Cover Bolts, 8 Mils Interior and Exterior Epoxy Paint	$ 15,224.00	$ 45,672.00
8	6	3" 601A Full Round Port Plug Valve, 175psi, Flanged Ends, Cast Iron Body, Cast Iron Cap, Nickel Seat, Ductile Iron Plug Coated in Buna, 10-12 Mils Amerlock 400 Interior and Exterior, Torque Collar and Lever , 316SS Hardware	$ 319.00	$ 1,914.00

Mueller refers to one or more of Mueller Water Products, Inc., a Delaware corporation ("MWP"), and its subsidiaries. MWP and each of its subsidiaries are legally separate and independent entities when providing products and services. MWP does not provide products or services to third parties. MWP and each of its subsidiaries are liable only for their own acts and omissions and not those of each other. MWP brands include Mueller®, Echologics®, Hydro Gate®, Hydro-Guard®, Jones®, Mi.Net®, Milliken®, Pratt®, Singer®, and U.S. Pipe Valve and Hydrant. Please see muellerwp.com/brands to learn more.

DATE: 3/24/2022
PROPOSAL #: Q-022-25951
PROJECT: Reclaimed Water Interconnect Facility

ITEM	QTY	DESCRIPTION	UNIT PRICE	EXTENDED
9	1	4" 601 Full Round Port Plug Valve, 175psi, Flanged Ends, Cast Iron Body, Cast Iron Cap, Nickel Seat, Ductile Iron Plug Coated in Buna, 10-12 Mils Amerlock 400 Interior and Exterior, Torque Collar and Lever , 316SS Hardware	$ 430.10	$ 430.10
10	2	18" 601 Standard Port Plug Valve, 150psi, Flanged Ends, Cast Iron Body, Cast Iron Cap, Nickel Seat, Ductile Iron Plug Coated in Buna, 10-12 Mils Amerlock 400 Interior and Exterior, Above Ground Gear, Handwheel , 316SS Hardware	$ 5,501.10	$ 11,002.20
11	1	Start Up Includes 1 Trip(s) and 3 Day(s) of Service, Includes training.	$ 7,525.00	$ 7,525.00
			Proposal Total:	$ 174,622.15

****Quoting with coatings as noted only, to be top coated in the field by others.**

If you have any questions regarding this proposal, please contact our local sales representative:
Southwest Valve & Equipment
714-832-1090
14081 Yorba Street #109
Tustin, CA 92780

Sincerely,
Laura Polito
lpolito@muellerwp.com

cc:
Brett Hoffman, District Manager

Commercial Terms:

FOB Point	: Origin
Freight Terms	: PPA Pre-Pay & Allow
Payment Terms	: Net 30 Days
Price Validity	: 30 Days
Warranty	: 24 Months as defined in Terms and Conditions of Sale
Packaging	: Standard

Extended Warranty---Other than duration, Terms and Conditions of Sale shall apply
ADD 2% FOR 36 MONTH WARRANTY
ADD 3% FOR 48 MONTH WARRANTY
ADD 5% FOR 60 MONTH WARRANTY

1. Quoted Prices Exclude:

1.1 All Taxes

1.2 Flange nuts, bolts, gaskets, anchor, mounting bolts, Victaulic couplings, Mechanical Joint Accessories, thimbles, or non-standard tags.

1.3 Extension stems, soil pipes, valve boxes, covers, or “tee” wrenches

1.4 Hydraulic oil for cylinder operators and/or accumulator systems.

1.5 Spare parts

2. Clarifications

2.1 Standard Henry Pratt actuators are designed per AWWA C504, maximum 150 ft-lbs input torque at the nut, or maximum 80 ft-lbs rim pull for hand wheel gears.

2.2 Hydrostatic testing will be performed using ambient water temperature

2.3 Any additional information concerning submittals, O&M manuals, Pipe specs, etc., that were not provided at time of quote may impact price and delivery.

2.4 The quoted list of materials included herein represents our interpretation of Plans and Specifications (as provided) and is not guaranteed to be complete or correct. Prices are subject to change upon review of actual job specifications.

2.5 Electronic submittals and O & M manuals will be provided in PDF electronic format. Hard copies are available upon request.

2.6 The proposed Field Service Option includes technical support and assistance with repairs and/or installations.

2.7 Customer is to provide safe access and a safe working environment. Additionally, the customer is to supply power, light, air source (80 PSI), all rigging including ladders, scaffolding and cranes necessary for repairs and/or installations. (Valves 30” and smaller must be removed from the line for seat removal/installation)

2.8 Because actual service time may vary due to unforeseen circumstances, the Field Service pricing offered is an estimate only. The actual cost of the field service visit will be billed by the Henry Pratt Company.

2.9 Henry Pratt Field Service appointments are not scheduled until receipt of a purchase order and are based on current availability of a service technician.

CONDITIONS OF SALE

3. Prices are firm and proposal is valid providing:

3.1 Buyer's purchase order is received within 30 days of bid opening date. If purchase order is not received within 30 days, Seller reserves the right to re-quote and adjust price and/or delivery lead time.

3.2 Quotation assumes shipment of complete quoted material within 365 days from date of a received purchase order.

3.3 Approved drawings, if specifically required by purchase order, are returned within thirty (30) days of submittal date, with full release to manufacturing. If approved drawings are not received within 30 days, Seller reserves the right to re-quote and adjust price and/or delivery lead time.

3.4 Henry Pratt Company's Terms and Conditions of Sale apply to this quotation. A copy of our Terms and Conditions of Sale can be downloaded from https://www.henrypratt.com/sites/henrypratt.com/files/uploads/media/13313-terms-and-conditions-of-sale-pratt_9-10-2018_2.pdf.

3.5 Quoted shipping dates are estimates only based on shop loads and lead times of materials from outside vendors. Seller will meet quoted schedules or reflect currently schedules upon order acknowledgement. Lead time shall be mutually agreed to at the time of product release to manufacture and credit package approval by Seller. Seller shall not be responsible for delay in deliveries due to any cause beyond Seller's reasonable control, regardless of theory of liability.

3.6 Seller shall not be liable for Buyer's loss of profit, indirect, liquidated, incidental, or consequential damages, regardless of theory of liability. Seller's total liability shall not exceed the unit purchase price of the products supplied. Indemnification shall be limited solely to Seller's negligence.

3.7 This quotation is based on payment terms of Net 30 Days from date of invoice with no retainage. Payment terms are extended to customers who have completed a credit application, including credit agreement, and have been approved by our Credit Department. Payment must be made in advance of shipment for all other accounts.

ALL QUOTATIONS/PURCHASE ORDERS ARE SUBJECT TO RENEGOTATION IF DIFFERING TERMS AND CONDITIONS ARE STATED IN BUYER'S PURCHASE ORDER WHEN RECEIVED.

TRI STAR INDUSTRIAL COMPANY
FABRICATION DIVISION

1225 South 18th Ave. ♦ Phoenix, AZ 85007
♦ T: 602-437-0006 F: 602-437-0044

PIPE SUPPORT SPECIAL DESIGN AND FABRICATION

UNIT PRICE ESTIMATE SHEET

CUSTOMER: 0 **QUOTE#:** CE22-060323

JOB NAME: Chandler RWIF GMP Support **DATE:** 3/23/2022

Mark#	Qty	UM	DESCRIPTION (PS# / SIZE / CL / FINISH)	Ref Dwg	Net Price Each	Total	NOTES
1	6	EA	12" SST Pipe Saddle Roller Support ~See detail 202 sheet M-7.02 (ROLLER EXCLUDE)		$ 1,440.85	$ 8,645.08	
2	20	EA	18" SST Strap for Concrete Saddle P602		$ 481.40	$ 9,628.04	
3	7	EA	24" SST Strap for Concrete Saddle P602		$ 536.40	$ 3,754.81	
4	3	EA	2 1/2" SST Vertical Pipe Stanchion Quote @ 12" CL P668		$ 377.05	$ 1,131.14	
5	6	EA	4.5' x 4.5' SST Panel (NO QUOTE)				
6	9	EA	18" P620 - Galv 90/Tee Pipe Supt Bol Quote @ 36" CL ~Refer to Detail 505, Sheet M-7.05, and M-1.04 keyed note 17		$ 1,281.88	$ 11,536.95	
7	2	EA	24" P620 - Galv 90/Tee Pipe Supt Bol Quote @ 36" CL		$ 1,947.81	$ 3,895.62	
8	1	EA	24" P620 - Galv 90/Tee Pipe Supt Bol Quote @ 36" CL ~Refer to detail 303 sheet M-7.03, and M-1.05 keyed note 17		$ 2,451.28	$ 2,451.28	
9	16	EA	12" P697 - SST Air Pipe Sliding Supt ~Refer to sheet M-7.02, detail 202		$ 2,236.40	$ 35,782.43	
10	2	EA	18" P602 - Galv Concrete Pipe Supt		$ 321.74	$ 643.48	
11	3	EA	24" P602 - Galv Concrete Pipe Supt		$ 339.55	$ 1,018.65	
12	1	EA	24" P602 - SST Concrete Pipe Supt		$ 536.40	$ 536.40	
13	8	EA	1" P618 Galv Floor Pipe Supt ~Refer to detail 702 sheet M-7.07		$ 108.38	$ 867.04	
14	8	EA	1/2" P618 SST Floor Pipe Supt ~Floor Support - 702		$ 117.29	$ 938.31	
15	3	EA	1" P618 SST Floor Pipe Supt ~Floor Support - 702		$ 119.28	$ 357.85	
16	8	EA	1 1/2" P618 SST Floor Pipe Supt ~Floor Pipe Support - 702		$ 121.28	$ 970.24	
17	3	EA	2" P618 SST Floor Pipe Supt ~Floor Pipe Support - 702		$ 123.28	$ 369.83	
18	2	EA	2 1/2" P618 SST Floor Pipe Supt		$ 125.27	$ 250.54	
19	5	EA	2 1/2" P618 SST Floor Pipe Supt ~Floor Support - 702		$ 125.27	$ 626.36	
20	69	EA	1/2" P660 SST Flush Mount Pipe Supt		$ 128.49	$ 8,865.71	
21	6	EA	1/2" P660 SST Flush Mount Pipe Supt ~Flush Mount - 203		$ 128.49	$ 770.93	
22	146	EA	1" P660 SST Flush Mount Pipe Supt		$ 130.68	$ 19,079.82	
23	2	EA	1" P660 SST Flush Mount Pipe Supt ~For three 1" lines		$ 193.38	$ 386.76	
24	13	EA	1" P660 SST Flush Mount Pipe Supt ~One Support for six 1" lines		$ 287.42	$ 3,736.52	
25	1	EA	1" P660 SST Flush Mount Pipe Supt ~One Support for three 1" lines		$ 130.68	$ 130.68	
26	2	EA	1 1/2" P660 SST Flush Mount Pipe Supt ~Single support w/ 2 straps - one 1 1/2", & one 1/4"		$ 202.47	$ 404.94	
27	3	EA	1 1/2" P660 SST Flush Mount Pipe Supt ~Single support w/ 3 straps - one 1 1/2", one 3/4", & one 1/4"		$ 301.06	$ 903.19	
28	3	EA	1 1/2" P660 SST Flush Mount Pipe Supt ~Single support w/ 4 straps - one 1 1/2", one 3/4", one 1/2", & one 1/4"		$ 360.22	$ 1,080.65	
29	6	EA	1 1/2" P660 SST Flush Mount Pipe Supt ~Single support w/ 5 straps - two 1 1/2", one 3/4", one 1/2", & one 1/4"		$ 502.19	$ 3,013.12	
30	2	EA	1 1/2" P660 SST Flush Mount Pipe Supt ~Single support w/ 6 straps - three 1 1/2", one 3/4", one 1/2", & one 1/4"		$ 507.16	$ 1,014.31	
31	9	EA	2" P660 SST Flush Mount Pipe Supt ~Detail -203 Flush Mount Support		$ 134.45	$ 1,210.01	
32	12	EA	2" P660 SST Flush Mount Pipe Supt ~Pipe Support - 506		$ 134.45	$ 1,613.35	
33	2	EA	12" P662 Galv Pipe Supt for One Vert		$ 343.53	$ 687.07	
34	6	EA	1/2" P618 Galv Floor Pipe Supt ~Refer to Sheet M-1.24 Keyed Note 19		$ 103.45	$ 620.68	
35	12	EA	2" P618 Galv Floor Pipe Supt		$ 107.38	$ 1,288.56	
36	16	EA	12" P658 - Galv Wall Bracket		$ 913.32	$ 14,613.12	
37	6	EA	12" P658 - Galv Wall Bracket ~Refer to sheet M-7.05,detail 504		$ 930.74	$ 5,584.44	
38	16	EA	14" P658 - SST Wall Bracket ~Refer to sheet M-7.05, detail 504		$ 1,321.03	$ 21,136.53	
39	11	EA	3/4" P664 SST Pipe Supt - Wall Strap		$ 14.96	$ 164.53	
40	10	EA	1" P664 SST Pipe Supt - Wall Strap ~Wall Strap - 203		$ 16.62	$ 166.24	
41	5	EA	2" P664 SST Pipe Supt - Wall Strap		$ 30.18	$ 150.90	
42	6	EA	N/A P616-SST Vertical Pipe Supt		$ 681.78	$ 4,090.68	
43	3	EA	18" P624 - 2' Galv Adj Pipe Support		$ 907.61	$ 2,722.84	
44	2	EA	24" P624 - 2' Galv Adj Pipe Support		$ 1,215.61	$ 2,431.23	
45	9	EA	24" P624 - 4' Galv Adj Pipe Support		$ 1,344.79	$ 12,103.09	
46	4	EA	12" P630 - Galv Pipe Hanger @ Metal (QUOTE @ 24" CL)		$ 312.89	$ 1,251.56	
47	4	EA	14" P630 - Galv Pipe Hanger @ Metal (QUOTE @ 24" CL)		$ 531.93	$ 2,127.72	
48	2	EA	16" P630 - Galv Pipe Hanger @ Metal (QUOTE @ 24" CL)		$ 580.15	$ 1,160.31	
49	13	EA	1/2" @ 6' SST Supt Post w/Chnl		$ 467.74	$ 6,080.56	
50	5	EA	3/4" @ 6' SST Supt Post w/Chnl		$ 468.00	$ 2,340.00	
51	3	EA	1" @ 6' SST Supt Post w/Chnl		$ 470.38	$ 1,411.13	
52	11	EA	1 1/2" @ 6' SST Supt Post w/Chnl		$ 470.82	$ 5,178.97	
53	5	EA	1 1/2" @ 6' SST Supt Post w/Chnl ~		$ 470.82	$ 2,354.08	
54	2	EA	12" D-205 '4' SST Adjustable Pipe Su		$ 1,176.36	$ 2,352.71	
55	4	EA	14" D-205 '2' Galv Adjustable Pipe S		$ 670.71	$ 2,682.85	
56	13	EA	12" D-204 'SST Pipe Hanger		$ 750.40	$ 9,755.23	
57	22	EA	1" D-307 'SST Extended Mount Unistr		$ 151.74	$ 3,338.18	
58	9	EA	24" #260 Galv Clevis Hanger (QUOTE @ 24" CL)		$ 807.51	$ 7,267.62	
		EA					
		EA					
		EA					
			Grand Total			**$ 238,674.89**	
						Plus Tax	
						FFA to Jobsite	
				(4 shipments are FFA-any additional are PPD & ADD to jobsite)			

General Notes:

This is a unit price estimate, not a lump sum offer. We are not responsible for errors or omissions.
Unless specifically shown or incorporated onto supports for larger lines all supports for 2" and below are not included.
Duct, HVAC or Plumbing supports are not included unless noted otherwise.
Anchors are included. Powers anchors/epoxy is quoted. Any deviations will change pricing and/or anchor scope.
Supports manufactured of FRP materials are not included unless noted otherwise.
Neoprene or rubber isolation pads are not included unless noted otherwise.
Link seals if required for any wall sleeve item quoted are not included unless noted otherwise.
No engineering is included. If required it will be quoted as an additional charge.
All prices are good for 60 days.
This pipe support quote reflects only the materials noted in the details and as noted above. Any deviations are noted herein.
Unless noted otherwise any structural racking regardless of where shown are not included.
The above unit pricing is based upon the entire quote being purchased and released. Scope changes most likely will cause unit price changes.
ABBREVIATIONS: CL = CENTERLINE; HDG = HOT DIP GALVANIZED; BC = BLAST CLEAN; OSC = ONE SHOP COAT PRIMER;
SS304/316 = STAINLESS STEEL; COP = COPPER; BOD = BOTTOM or BACK OF DUCT; (*) = SCALED DIMENSION.
All dimensions are in inches and are to the centerline of pipe, unless noted otherwise.
This quotation does not include jobsite inspections of pipe support installation unless specifically identified otherwise.
This quotation, unless otherwise noted, does not meet any requirements for buy American or domestic material
If this is a project requirement please notify our estimating department and we can revise our quote to meet these needs.
Unless otherwise noted, all materials are non-cancelable/non-returnable.
This take-off has incorporated the following addendum's:
Finish quoted is as shown above and does not include P&P on any stainless steel unless noted as such.
Temporary supports of any kind are not included unless noted otherwise.
Embed plates of any kind are not included unless noted otherwise.
Diffuser Supports are not included unless noted otherwise.
Calcium inserts or shields/saddles for any insulated or PVC piping are not included.
Supports quoted utilize standard 3-1 safety factor. Higher requirements could change pricing and will be quoted as an additional charge.

DeZURIK Quotation

To:	McCarthy Building Companies Inc Truman Manning Estimator 6625 N 24th Street Suite 200 Phoenix, AZ 85016 USA Phone 602-339-4092 Email tmanning@mccarthy.com	**Date of Quote:**	03-25-2022
		Quote Number:	265008
		Project Name:	Chandler RWIF
		I.D. (Rep. Use):	
		Line of Business:	4941 - Municipal Water Treatment
		Make Order To:	DeZURIK, Inc. C/O West Tech Equipment Chris Dreiling Sales 1050 N Fairway Dr Suite B-103 Avondale, AZ 85323 USA Phone 623-476-5600 Email chris@wt-az.com
Invoice Terms:	Net 30 Days		
Days Valid:	30		
Shipping Point:	Sartell, MN & Houston, TX		
Delivery Notes:	Full Freight Allowed 18-20 Week Lead Time ARO, Subject To Prior Sales		

Currency and Values expressed in USD ($)

ANY PURCHASE ORDER ISSUED AS A RESULT OF THIS QUOTATION IS SUBJECT TO ALL OF THE MANUFACTURER'S CONDITIONS SET FORTH IN THIS DOCUMENT HEREOF, REASONABLE CONTRACT LANGUAGE NEGOTIATIONS AND FINAL ACCEPTANCE BY DEZURIK AT SARTELL, MN USA.
UNLESS OTHERWISE NOTED, QUOTATIONS ARE VALID FOR 30 DAYS. UNTIL ACCEPTANCE OF ORDER, QUOTED PRICES AND DELIVERY ARE SUBJECT TO CHANGE. UNLESS OTHERWISE NOTED, PRICES ARE FIRM FOR SHIPMENT OF GOODS WITHIN 12 MONTHS FROM THE RELEVANT QUOTATION DATE. OUR PRICES ARE BASED ON CURRENT PRICES FOR MATERIAL. IF A SIGNIFICANT MATERIAL PRICE INCREASE OCCURS BETWEEN ORDER ACCEPTANCE AND SHIPMENT DATE, GOODS SCHEDULED TO SHIP BEYOND 12 MONTHS OF THE QUOTATION DATE ARE SUBJECT TO A PRICE ADJUSTMENT BY THE AMOUNT NECESSARY TO COVER SUCH AN INCREASE.

Line #	Cust. Line # Tag #	Qty	Order Code	Unit Price	Total Price
1		2	BAW,12,F1,CI,NBRN-NBR,150B,DI-S2*GS-6B-HD8 **BAW:** Style - DeZURIK AWWA C504 3-72"; C516 78" and larger Rubber Seated Butterfly Valve **12:** Size - 12 Inch (300mm) **F1:** End Connection - Flanged, Drilled to ASME B16.1 Class 125/150 **CI:** Body Material - Cast Iron, ASTM A126 Class B **NBRN:** Packing - NBR (Acrylonitrile-Butadiene), Self-Adjusting Multiple V-Ring; -20 to 180°F (-29 to 82°C) **NBR:** Seat Material - NBR (Acrylonitrile-Butadiene); -20 to 180°F (-29 to 82°C) **150B:** Service Class - AWWA Class 150B **DI:** Disc - Ductile Iron, ASTM A536 Grade 65-45-12 (3" - 24" (80-600mm) Class 150B/250B, 28" - 72" (700-1800mm) Class 25A, 75B & 150B & 28" - 48" (800-1200mm) Class 250B) and Grade 80-55-06 (54" - 72" (1400-1800mm) Class 250B), Type 316 Stainless Steel Seating Edge (3" - 20" (80-500mm) =ASTM A276, 24" and larger (600mm & larger) - ASTM A240) **S2:** Shaft - 316 Stainless Steel, ASTM A276 **Coating or Paint:** S30SC0 - 8 mils minimum (non-stainless steel parts) of Blue DeZURIK Epoxy (NSF Std. 61) on Interior and Standard (SP10) surface prep AND Blue DeZURIK Epoxy (NSF Std. 61), and on Exterior with Standard (SP10) surface prep **GS-6B-HD8:** Actuator Type - G-Series Worm Gear with Handwheel Operator	$1,172.00	$2,344.00

DeZURIK Quotation

Line #	Cust. Line # Tag #	Qty	Order Code	Unit Price	Total Price
2		1	BAW,16,F1,CI,NBRN-NBR,150B,DI-S2*GS-6B-HD16 **BAW:** Style - DeZURIK AWWA C504 3-72"; C516 78" and larger Rubber Seated Butterfly Valve **16:** Size - 16 Inch (400mm) **F1:** End Connection - Flanged, Drilled to ASME B16.1 Class 125/150 **CI:** Body Material - Cast Iron, ASTM A126 Class B **NBRN:** Packing - NBR (Acrylonitrile-Butadiene), Self-Adjusting Multiple V-Ring; -20 to 180°F (-29 to 82°C) **NBR:** Seat Material - NBR (Acrylonitrile-Butadiene); -20 to 180°F (-29 to 82°C) **150B:** Service Class - AWWA Class 150B **DI:** Disc - Ductile Iron, ASTM A536 Grade 65-45-12 (3" - 24" (80-600mm) Class 150B/250B, 28" - 72" (700-1800mm) Class 25A, 75B & 150B & 28" - 48" (800-1200mm) Class 250B) and Grade 80-55-06 (54" - 72" (1400-1800mm) Class 250B), Type 316 Stainless Steel Seating Edge (3" - 20" (80-500mm) =ASTM A276, 24" and larger (600mm & larger) - ASTM A240) **S2:** Shaft - 316 Stainless Steel, ASTM A276 **Coating or Paint:** S30SC0 - 8 mils minimum (non-stainless steel parts) of Blue DeZURIK Epoxy (NSF Std. 61) on Interior and Standard (SP10) surface prep AND Blue DeZURIK Epoxy (NSF Std. 61), and on Exterior with Standard (SP10) surface prep **GS-6B-HD16:** Actuator Type - G-Series Worm Gear with Handwheel Operator	$1,904.00	$1,904.00
3		11	BAW,18,F1,CI,NBRN-NBR,150B,DI-S2*GS-6B-HD24 **BAW:** Style - DeZURIK AWWA C504 3-72"; C516 78" and larger Rubber Seated Butterfly Valve **18:** Size - 18 Inch (450mm) **F1:** End Connection - Flanged, Drilled to ASME B16.1 Class 125/150 **CI:** Body Material - Cast Iron, ASTM A126 Class B **NBRN:** Packing - NBR (Acrylonitrile-Butadiene), Self-Adjusting Multiple V-Ring; -20 to 180°F (-29 to 82°C) **NBR:** Seat Material - NBR (Acrylonitrile-Butadiene); -20 to 180°F (-29 to 82°C) **150B:** Service Class - AWWA Class 150B **DI:** Disc - Ductile Iron, ASTM A536 Grade 65-45-12 (3" - 24" (80-600mm) Class 150B/250B, 28" - 72" (700-1800mm) Class 25A, 75B & 150B & 28" - 48" (800-1200mm) Class 250B) and Grade 80-55-06 (54" - 72" (1400-1800mm) Class 250B), Type 316 Stainless Steel Seating Edge (3" - 20" (80-500mm) =ASTM A276, 24" and larger (600mm & larger) - ASTM A240) **S2:** Shaft - 316 Stainless Steel, ASTM A276 **Coating or Paint:** S30SC0 - 8 mils minimum (non-stainless steel parts) of Blue DeZURIK Epoxy (NSF Std. 61) on Interior and Standard (SP10) surface prep AND Blue DeZURIK Epoxy (NSF Std. 61), and on Exterior with Standard (SP10) surface prep **GS-6B-HD24:** Actuator Type - G-Series Worm Gear with Handwheel Operator	$2,489.00	$27,379.00

DeZURIK Quotation

Line #	Cust. Line # Tag #	Qty	Order Code	Unit Price	Total Price
4		5	BAW,24,F1,CI,NBRN-NBR,150B,DI-S2*GS-12A-HD12 **BAW:** Style - DeZURIK AWWA C504 3-72"; C516 78" and larger Rubber Seated Butterfly Valve **24:** Size - 24 Inch (600mm) **F1:** End Connection - Flanged, Drilled to ASME B16.1 Class 125/150 **CI:** Body Material - Cast Iron, ASTM A126 Class B **NBRN:** Packing - NBR (Acrylonitrile-Butadiene), Self-Adjusting Multiple V-Ring; -20 to 180°F (-29 to 82°C) **NBR:** Seat Material - NBR (Acrylonitrile-Butadiene); -20 to 180°F (-29 to 82°C) **150B:** Service Class - AWWA Class 150B **DI:** Disc - Ductile Iron, ASTM A536 Grade 65-45-12 (3" - 24" (80-600mm) Class 150B/250B, 28" - 72" (700-1800mm) Class 25A, 75B & 150B & 28" - 48" (800-1200mm) Class 250B) and Grade 80-55-06 (54" - 72" (1400-1800mm) Class 250B), Type 316 Stainless Steel Seating Edge (3" - 20" (80-500mm) =ASTM A276, 24" and larger (600mm & larger) - ASTM A240) **S2:** Shaft - 316 Stainless Steel, ASTM A276 **Coating or Paint:** S30SC0 - 8 mils minimum (non-stainless steel parts) of Blue DeZURIK Epoxy (NSF Std. 61) on Interior and Standard (SP10) surface prep AND Blue DeZURIK Epoxy (NSF Std. 61), and on Exterior with Standard (SP10) surface prep **GS-12A-HD12:** Actuator Type - G-Series Worm Gear with Handwheel Operator	$5,351.00	$26,755.00
5	150 PSI Line Pressure 80 PSI Supply Air Pressure	4	BAW,12,F1,CI,NBRN-NBR,150B,DI-S2*TW-5-PC6-540,4V1015 **BAW:** Style - DeZURIK AWWA C504 3-72"; C516 78" and larger Rubber Seated Butterfly Valve **12:** Size - 12 Inch (300mm) **F1:** End Connection - Flanged, Drilled to ASME B16.1 Class 125/150 **CI:** Body Material - Cast Iron, ASTM A126 Class B **NBRN:** Packing - NBR (Acrylonitrile-Butadiene), Self-Adjusting Multiple V-Ring; -20 to 180°F (-29 to 82°C) **NBR:** Seat Material - NBR (Acrylonitrile-Butadiene); -20 to 180°F (-29 to 82°C) **150B:** Service Class - AWWA Class 150B **DI:** Disc - Ductile Iron, ASTM A536 Grade 65-45-12 (3" - 24" (80-600mm) Class 150B/250B, 28" - 72" (700-1800mm) Class 25A, 75B & 150B & 28" - 48" (800-1200mm) Class 250B) and Grade 80-55-06 (54" - 72" (1400-1800mm) Class 250B), Type 316 Stainless Steel Seating Edge (3" - 20" (80-500mm) =ASTM A276, 24" and larger (600mm & larger) - ASTM A240) **S2:** Shaft - 316 Stainless Steel, ASTM A276 **Coating or Paint:** S30SC0 - 8 mils minimum (non-stainless steel parts) of Blue DeZURIK Epoxy (NSF Std. 61) on Interior and Standard (SP10) surface prep AND Blue DeZURIK Epoxy (NSF Std. 61), and on Exterior with Standard (SP10) surface prep **TW-5-PC6-540:** Actuator Type - T-Series with Double Acting Pneumatic Cylinder Operator, Per AWWA C540 **4V1015:** Accessories - ASCO EF8344G74 Brass Body Solenoid; International or US Voltage 110/50 or 120/60; TYPE 3,3S,4,4X,6,6P,7 & 9; 1/2" NPT; 150 Maximum Pressure Rating; Single Coil **CLOSE:** Sol Action - Solenoid To Close Valve When Energized	$2,902.00	$11,608.00

DeZURIK Quotation

Line #	Cust. Line # Tag #	Qty	Order Code	Unit Price	Total Price
6		1	CVS,12,6000A,F1,DI,DI-S11-S2-NBR,L41LD1*LS **CVS:** Style - Swing Check Valves **12:** Size - 12 Inch (300mm) **6000A:** Body Style - Series 6000 Swing Check Valve **F1:** End Connection - Flanged; ASME 125/150 **DI:** Body Material - Ductile Iron **DI:** Disc - Ductile Iron **S11:** Shaft - 303 Stainless Steel **S2:** Body Seat Material - 316 Stainless Steel **NBR:** Disc Seat Material - Acrylonitrile-Butadiene (NBR) **Coating or Paint:** L41LD1 - 12 mils minimum (non-stainless steel parts) of Blue Fusion Bonded Epoxy on Interior and SP5 surface prep AND Blue Fusion Bonded Epoxy (Valve), and on Exterior with SP5 surface prep **LS:** Actuator Type - Lever & Spring	$6,387.00	$6,387.00
7		3	CVS,18,6000,F1,DI,DI-S11-S2-NBR,L41LD1*LS **CVS:** Style - Swing Check Valves **18:** Size - 18 Inch (450mm) **6000:** Body Style - Series 6000 Swing Check Valve **F1:** End Connection - Flanged; ASME 125/150 **DI:** Body Material - Ductile Iron **DI:** Disc - Ductile Iron **S11:** Shaft - 303 Stainless Steel **S2:** Body Seat Material - 316 Stainless Steel **NBR:** Disc Seat Material - Acrylonitrile-Butadiene (NBR) **Coating or Paint:** L41LD1 - 12 mils minimum (non-stainless steel parts) of Blue Fusion Bonded Epoxy on Interior and SP5 surface prep AND Blue Fusion Bonded Epoxy (Valve), and on Exterior with SP5 surface prep **LS:** Actuator Type - Lever & Spring	$12,931.00	$38,793.00
8		6	PEC,3,F1,CI,NBR,CR*LV **PEC:** Style - DeZURIK Eccentric Plug Valve, Rectangular Port (AWWA C517) **3:** Size - 3 Inch (80mm); (Standard Port), Stainless Steel Bearings **F1:** End Connection - Flanged, Drilled to ASME Class 125/150 **CI:** Body Material - Cast Iron, ASTM A126, Class B; (.5"-12" Pressure Rating 175 psi (1210 kPa); (14"& larger Pressure Rating 150 psi (1030 kPa) **NBR:** Packing - .5" - 3" Acrylonitrile-Butadiene Reinforced filler in a PTFE U-ring, -20 to 180° F. (-29 to 83° C.); 4" & Larger Acrylonitrile-Butadiene Reinforced V-type , -20 to 250° F. (-29 to 121° C.) **CR:** Plug Facing - Chloroprene; -20 to 180°F (-29 to 83°C) **Coating or Paint:** SB0 - 4 mils minimum (non-stainless steel parts) of Blue DeZURIK Epoxy (NSF Std. 61) on Exterior with Standard (SP10) surface prep **LV:** Actuator Type - Lever; Non-Removable	$269.00	$1,614.00

DeZURIK Quotation

Line # / Cust. Line # / Tag #	Qty	Order Code	Unit Price	Total Price
9	1	PEC,4,F1,CI,NBR,CR*GS-6-HD8 **PEC:** Style - DeZURIK Eccentric Plug Valve, Rectangular Port (AWWA C517) **4:** Size - 4 Inch (100mm); (Standard Port), Stainless Steel Bearings, Welded-In Nickel Seat (Except Rubber Lined or Stainless Steel Bodies) **F1:** End Connection - Flanged, Drilled to ASME Class 125/150 **CI:** Body Material - Cast Iron, ASTM A126, Class B; (.5"-12" Pressure Rating 175 psi (1210 kPa); (14"& larger Pressure Rating 150 psi (1030 kPa) **NBR:** Packing - .5" - 3" Acrylonitrile-Butadiene Reinforced filler in a PTFE U-ring, -20 to 180° F. (-29 to 83° C.); 4" & Larger Acrylonitrile-Butadiene Reinforced V-type , -20 to 250° F. (-29 to 121° C.) **CR:** Plug Facing - Chloroprene; -20 to 180°F (-29 to 83°C) **Coating or Paint:** SB0 - 4 mils minimum (non-stainless steel parts) of Blue DeZURIK Epoxy (NSF Std. 61) on Exterior with Standard (SP10) surface prep **GS-6-HD8:** Actuator Type - G-Series Gear with Handwheel Operator	$492.00	$492.00
10	2	PEC,18,F1,CI,NBR,CR*GS-12-HD12 **PEC:** Style - DeZURIK Eccentric Plug Valve, Rectangular Port (AWWA C517) **18:** Size - 18 Inch (450mm); (Standard Port), Stainless Steel Bearings, Welded-In Nickel Seat (Except Rubber Lined or Stainless Steel Bodies) **F1:** End Connection - Flanged, Drilled to ASME Class 125/150 **CI:** Body Material - Cast Iron, ASTM A126, Class B; (.5"-12" Pressure Rating 175 psi (1210 kPa); (14"& larger Pressure Rating 150 psi (1030 kPa) **NBR:** Packing - .5" - 3" Acrylonitrile-Butadiene Reinforced filler in a PTFE U-ring, -20 to 180° F. (-29 to 83° C.); 4" & Larger Acrylonitrile-Butadiene Reinforced V-type , -20 to 250° F. (-29 to 121° C.) **CR:** Plug Facing - Chloroprene; -20 to 180°F (-29 to 83°C) **Coating or Paint:** SB0 - 4 mils minimum (non-stainless steel parts) of Blue DeZURIK Epoxy (NSF Std. 61) on Exterior with Standard (SP10) surface prep **GS-12-HD12:** Actuator Type - G-Series Gear with Handwheel Operator	$4,509.00	$9,018.00
Total				$126,294.00

QA #4

SECTION 09714

METAL FACED ACOUSTICAL PANELS

PART 1 - GENERAL

1.1 SUMMARY

A. Section includes: Sound absorptive ceiling and wall panels and accessories:
   1. Buildings include:
      a. RWIF Blower Building: all available space on ceilings and walls.

B. Related sections:
   1. The Contract Documents are complementary; what is called for by one is as binding as if called for by all.
   2. It is the Contractor's responsibility for scheduling and coordinating the Work of subcontractors, suppliers, and other individuals or entities performing or furnishing any of Contractor's Work.
   3. The following Sections are related to the Work described in this Section. This list of Related Sections is provided for convenience only and is not intended to excuse or otherwise diminish the duty of the Contractor to see that the completed Work complies accurately with the Contract Documents.
      a. Section 05500 - Metal Fabrications.

1.2 REFERENCE STANDARDS

A. ASTM International (ASTM):
   1. C 423 - Standard Test Method for Sound Absorption and Sound Absorption Coefficients by the Reverberation Room Method.
   2. E 84 - Standard Test Method for Surface Burning Characteristics of Building Materials.

1.3 SUBMITTALS

A. Shop Drawings: Indicate grid layout and related dimensioning.
   1. Submit for approval the following:
      a. A copy of this specification section, with addendum updates included, and all referenced and applicable sections, with addendum updates included, with each paragraph check-marked to indicate specification compliance or marked to indicate requested deviations from specification requirements. Check marks (✓) shall denote full compliance with a paragraph as a whole. If deviations from the specifications are indicated, and therefore requested by the CONTRACTOR, each deviation shall be underlined and denoted by a number in the margin to the right of the identified paragraph, referenced to a detailed written explanation of the reasons for requesting the deviation. The ENGINEER shall be the final

DRAFT

QA #4

authority for determining acceptability of requested deviations. The CONTRACTOR shall furnish equipment and/or services as specified if an exception and/or deviation is rejected. The remaining portions of the paragraph not underlined will signify compliance on the part of the CONTRACTOR with the specifications. Failure to include a copy of the marked-up specification sections, along with justification(s) for any requested deviations to the specification requirements, with the submittal shall be sufficient cause for rejection of the entire submittal with no further consideration.

b. The CONTRACTOR shall submit the preventive maintenance information package as part of the shop drawing submittal package to the ENGINEER for review and approval. **SHOP DRAWING SUBMITTAL PACKAGE WILL NOT BE APPROVED WITHOUT ACCEPTANCE OF PREVENTIVE MAINTENANCE INFORMATION.**

B. Product Data: Provide data on suspension system components and acoustical units.

PART 2 - PRODUCTS

2.1 SYSTEM DESCRIPTION

A. Sound absorption: Minimum, expressed in sabins, at following octave band center frequencies for 30- by 120-inch panels with 2-inch thick wrapped acoustical insulation, when tested in accordance with ASTM C 423:
1. 125 hertz: 4.5.
2. 250 hertz: 14.1.
3. 500 hertz: 26.7.
4. 1,000 hertz: 28.6.
5. 2,000 hertz: 26.3.
6. 4,000 hertz: 29.2.

B. Fire ratings: Flame spread of 10, smoke developed of 5 when tested in accordance with ASTM E 84.

2.2 ACOUSTICAL WALL PANELS

A. Manufacturers:
1. Sound Sorb by Acoustic Systems, Austin, Texas.
2. Eckoustic Functional Panels (EFP) by Eckel Industries, Inc. Cambridge, MA.
3. Or approved equal.

B. Metal facing: 0.032 inch minimum; coated aluminum, ribbed to provide impact resistance.

C. Perforation ratio: Not less than 23 percent.

DRAFT

QA #4

D. Panel size: 18 by 96 inches.

E. Absorber:
1. Fiberglass or mineral wool wrapped in heat-sealed polyvinyl chloride film for outdoor applications or polyethylene sheet for indoor applications.
2. Polyvinyl chloride film thickness 2 mils.
3. Perforation ratio 10 percent within 2 percent both sides.
4. Blanket; semi rigid, not less than 2 inch, density of approximately 1.5 pounds per cubic foot.

F. Perforated metal facing shall be furred out on metals channels by 2 inches.

G. Mounting brackets: Minimum 4; Type 316 stainless steel.

H. Adsorption factors:

Frequency Band	125	250	500	1,000	2,000	4,000	NRC
Wall Panel	0.34	1.11	1.48	1.15	0.74	0.56	1.10

2.3 ACOUSTICAL CEILING PANELS

A. Manufacturer:
1. White Sculptured PVC Ceiling Panels by MBI Products, Cleveland Ohio.
2. Eckel Panels by Eckel Industries, Inc., Cambridge, MA.
3. Or approved equal.

B. Fabrication: Semi-rigid, high binder content fiberglass material, 1-inch thick, 3 pounds per cubic foot density.

C. Facing: Heat-sealed layer of 1.5-mil thick perforated PVC film, perforation ratio 10 percent within 2 percent.

D. Attachment:
1. Extruded PVC profiles, mastic glue, stick clips, screw anchors with oversized washers.
2. Attach directly or with spacing not to exceed 2 inches.

E. Size: 48 by 48 inches, cut to fit.

F. Adsorption factors:

G. Adsorption factors:

DRAFT

QA #4

Frequency Band	125	250	500	1,000	2,000	4,000	NRC
Wall Panel	0.07	0.31	0.76	1.12	0.68	0.26	0.70

PART 3 - EXECUTION

3.1 INSTALLATION

A. Install acoustical panels in accordance with manufacturer's instructions.

B. Anchor furring to concrete or masonry walls securely.
   1. 1. Anchor horizontally at 12 inches above floor, at 24 inches on center, at ceiling, and vertically at ends.

C. Install insulation between furring.
   1. Hold in place until installation of panels.

D. Place panels vertically on walls, perpendicular to direction of furring, with maximum 1/16-inch space between panels.

E. Paint nail or screw head white.
   1. Nail or screw panels to furring in manufacturer's recommended pattern.
   2. Countersink nails or screws 1/16 inch.

F. Do not cover columns and beams with panels.
   1. Hold panels back 2 inches from columns.

G. When panels require field cutting, make sharp and perpendicular cuts using jigs.

H. Make neat cutouts for pipes, supports, and other projections from wall.
   1. Install metal trim around perimeter of panels.
   2. Fasten trim to edge furring with aluminum nails.
   3. Miter corners.

END OF SECTION

DRAFT

QA #22 Drawing

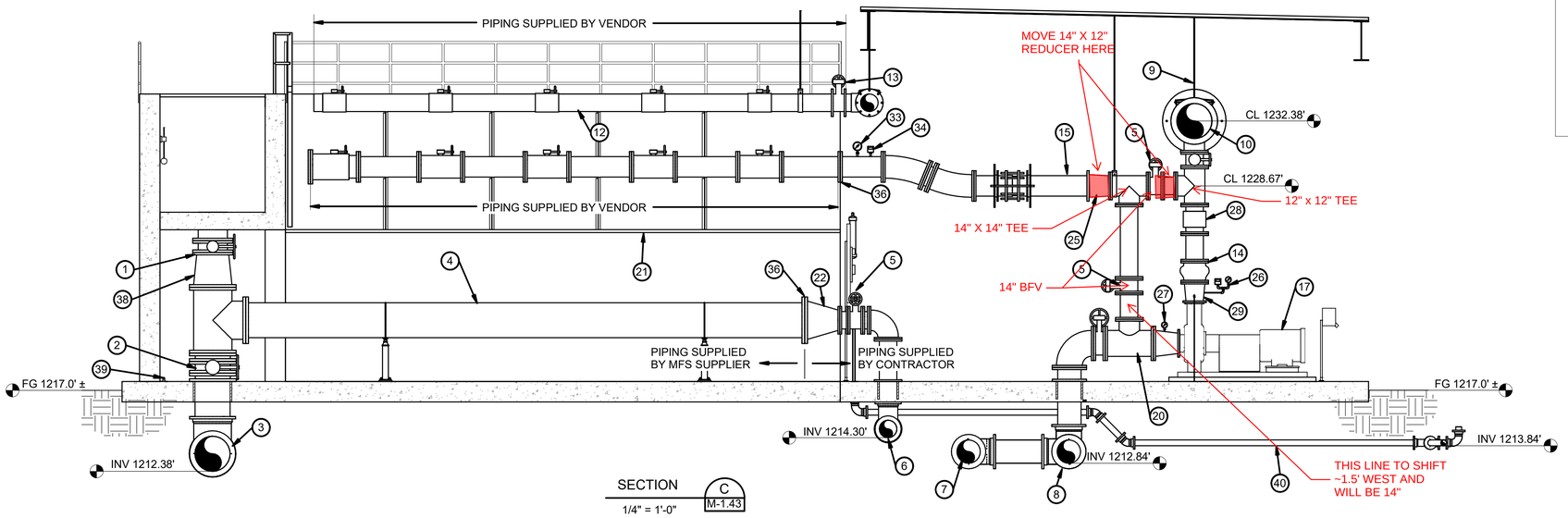

SECTION C M-1.43
1/4" = 1'-0"

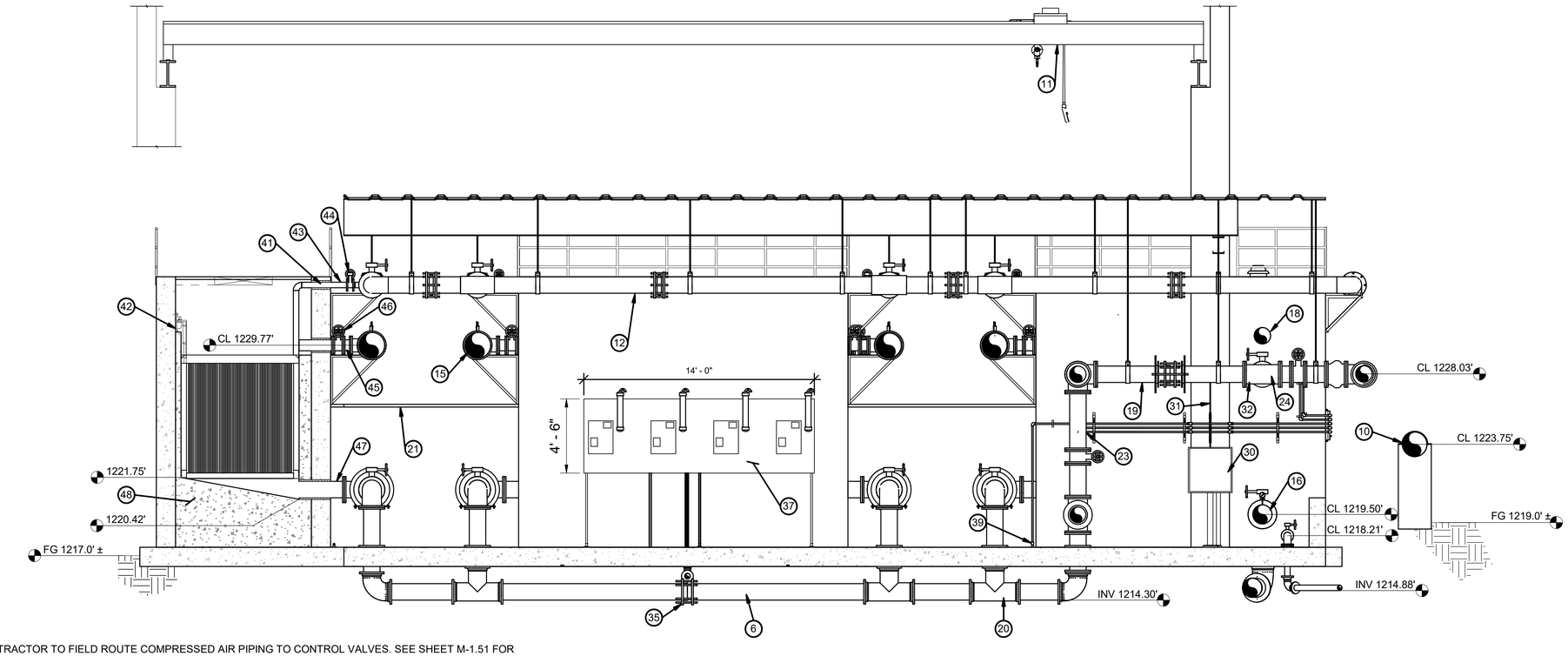

SECTION D M-1.43
1/4" = 1'-0"

NOTES:

1. CONTRACTOR TO FIELD ROUTE COMPRESSED AIR PIPING TO CONTROL VALVES. SEE SHEET M-1.51 FOR ISOMETRIC DIAGRAM. INSTRUMENT AIR PIPING NOT SHOWN FOR CLARITY.
2. PIPING BENEATH STRUCTURES TO BE CONCRETE ENCASED, PER DETAIL 103, SHEET C-7.01
3. CONTRACTOR TO COORDINATE LOCATIONS OF HANGING PIPE SUPPORTS IN THE FIELD WITH CANOPY SUPPORT BEAMS, SEE STRUCTURAL SHEETS.

KEYED NOTES

1. 20" DIA MEMBRANE TRAIN INLET BUTTERFLY VALVE
2. 24" DIA MEMBRANE TANK DRAIN BUTTERFLY VALVE
3. 24" DIA DIP MEMBANE TANK DRAIN MANIFOLD
4. 24" DIA 304 SS MEMBRANE TANK INLET/DRAIN MANIFOLD
5. 12" DIA BUTTERFLY VALVE
6. 12" DIA DIP CIP MANIFOLD
7. 16" DIA DIP SUCTION FROM BACKPULSE SUPPLY TANK
8. 16" DIA DIP PERMEATE PUMP SUCTION MANIFOLD
9. HANGING PIPE SUPPORT, SEE DETAIL 503 SHEET M-7.05
10. 24" DIA DIP COMMON PERMEATE MANIFOLD
11. 5-TON BRIDGE CRANE, SEE S-SHEETS FOR DETAILS
12. 12" DIA SS PROCESS AIR SUPPLY PIPE
13. 12" DIA BUTTERFLY VALVE
14. 12" DIA CHECK VALVE
15. 14" DIA DIP PERMEATE/BACKPULSE PIPE (TYP)
16. 14" DIA DIP SUCTION FROM CIP TANK
17. PERMEATE/BACKPULSE PUMP
18. 12" DIA DIP CIP TANK FILL PIPE FROM PERMEATE MANIFOLD
19. 12" DIA DIP CIP NEUTRALIZATION LOOP FROM MEMBRANE TRAIN
20. 14" X 12" TEE (TYP)
21. VALVE GALLERY ACCESS PLATFORM
22. 24" X 12" REDUCER
23. MEMBRANE CLEANING CHEMICALS DOSAGE POINT
24. NEUTRALIZATION CHEMICALS DOSAGE POINT
25. 14" X 12" REDUCER
26. DISCHARGE PRESSURE GAUGE AND SWITCH ASSEMBLY, SEE DETAIL 302 SHEET M-7.03
27. SUCTION PRESSURE GAUGE, SEE DETAIL 402 SHEET M-7.04
28. 12" DIA FLOW METER
29. 12" X 10" REDUCER
30. PH/CHLORINE ANALYZER PANEL, SEE DETAIL 2 SHEET M-1.50 AND INSTRUMENTATION SHEETS FOR DETAILS
31. 1/2" DIA SAMPLE LINE
32. SAMPLE CONNECTION, SEE DETAIL 602 SHEET M-7.06
33. PRESSURE INDICATOR TRANSMITTER, SEE ELECTRICAL SHEETS FOR DETAILS
34. PRESSURE SWITCH, SEE DETAIL 302 SHEET M-7.03
35. RESTRAINED FLEXIBLE COUPLING FOR BELOW GRADE DIP, SEE SPECIFICATIONS (TYP)
36. ISOLATING JOINT FLANGE KIT AT ALL CONNECTIONS WITH DISSIMILAR MATERIALS (TYP), SEE DETAIL 401 SHEET M-7.04
37. VENDOR-SUPPLIED TURBIDITY ANALYZER PANEL, SEE DETAIL 1 SHEET M-1.50 AND INSTRUMENTATION SHEETS FOR DETAILS
38. 24" X 20" DIA REDUCER (TYP)
39. 1" DIA CPVC SODIUM HYPOCHLORITE TO BACKPULSE TANK, SEE SHEET M-1.44 FOR ROUTING
40. 4" DIA CPVC DRAIN FROM TURBIDITY ANALYZER PANEL
41. PIPE PENTRATION (TYP), SEE DETAIL 105, SHEET M-7.01
42. CASSETE MOUNTING BRACKET, SEE STRUCTURAL SHEETS FOR DETAILS
43. 4" DIA SS AIR PIPE (TYP)
44. 4" DIA MANUAL BUTTERFLY VALVE (TYP)
45. 8" DIA SS PERMEATE PIPE (TYP)
46. 8" DIA MANUAL BUTTERFLY VALVE (TYP)
47. 12" DIA SS MEMBRANE TANK FEED PIPE (TYP)
48. MEMBRANE TANK GROUT, SEE STRUCTURAL SHEETS FOR DETAILS

1620 West Fountainhead Pkwy
Suite 501
Tempe, Arizona 85282
Phone: (480) 893-8860

Improving Arizona's Infrastructure Since 1942

WILSON ENGINEERS

CITY OF CHANDLER
RECLAIMED WATER INTERCONNECT FACILITY

MEMBRANE FACILITY SECTION AND DETAILS - 1

CITY PROJECT NO. WW1901.203
WILSON PROJECT NO. 21007

Design: SZ	Drawn: JMJ	Checked: SR
Date: 02/2022	Wilson Project No. 21007	

Rev#	Date	Description	By

VERIFY SCALES
BAR IS ONE INCH ON ORIGINAL DRAWING
0 1"
IF NOT ONE INCH ON THIS SHEET, ADJUST SCALES ACCORDINGLY

Registered Professional Engineer — Certified — 30185 UDAY K. GANDHE — Date Signed 02/28/2022 — ARIZONA U.S.A.

Registered Professional Engineer — Certificate No. 41000 — SREERAM RENGARAJ — Date Signed 02/28/2022 — ARIZONA U.S.A.

Sheet No. **M-1.45**

AGENCY REVIEW

QA #22 Drawing

PLC-RWIF

V* SEE NOTE 2
PCP-001

MEMBRANE DISCHARGE CONTROL FLOW OPEN/CLOSE COMMAND — ZC 133
MEMBRANE INFLUENT CONTROL FLOW OPEN/CLOSE COMMAND — ZC 131
AIR SCOUR AIR CONTROL FLOW OPEN/CLOSE COMMAND — ZC 102
INLET CHANNEL HIGH LEVEL ALARM — LSH 001
AIR SUPPLY ASSEMBLY SOLENOID OPEN COMMAND — UCO 103
PERMEATE EFFLUENT FLOW INDICATION — FI 001
SMF TANK NO. 1 HIGH HIGH LEVEL ALARM — LAHH 106
SMF TANK NO. 1 HIGH LEVEL ALARM — LAH 106
SMF TANK NO. 1 LEVEL INDICATION — LI 106
SMF TANK NO. 1 LOW LEVEL ALARM — LAL 106
SMF TANK NO. 1 LOW LOW LEVEL ALARM — LALL 106
MEMBRANE BYPASS FLOW CONTROL VALVE OPEN/CLOSE COMMAND — ZC 132
SMF TANK NO. 1 PERMEATE PRESSURE INDICATION — PI 107
SMF TANK NO. 1 PERMEATE HIGH PRESSURE ALARM — PAH 107

PERMEATE FLOW SIGNAL TO PLANT PLC — I–1.08

120 VAC — LIT 106 — LIT-106
V* SEE NOTE 1

OIT
ETHERNET SW
FOPP
O4
TO/FROM ADMIN BLDG
ECOM–ADM–A
FOPP
FO
TO/FROM RWIF ELEC BLDG
PLC–RWIF
ETHERNET SWITCH
I–1.04

INSTRUMENT AIR
I–1.19
IA-1"

AIR SUPPLY ASSEMBLY SEE MSS DRAWING 415261–AP–03
V* SEE NOTE 1

EJECTOR ASSEMBLY SEE MSS DRAWING 415261–AP–03
V* SEE NOTE 1
DRAIN OR MEMBRANE TANK

W-14"

AIR SCOURS FROM BLOWERS
I–1.18
A-12"
S
AI
FA
POP-102
LSH-001
LSH 001
V* SEE NOTE 1
BFV-102

W-16"

PIT 107
PIT-107
NOTE 3
TO/FROM PERMEATE PUMPS/BACKPULSE SYSTEM
I–1.08
V* SEE NOTE 1

FROM SELF CLEANING STRAINERS
I–1.03
W-24"

COMMON INFLUENT CHANNEL

A-4"
4 CASSETTES AND 1 SPARE PER TRAIN
VENDOR SUPPLIED

LE-106
V* SEE NOTE 1

TNK-100

V* SEE NOTE 1
W-20"
I/P
AI
IP-131
BFV-131
W-24"
IP-133
BFV-133
V* SEE NOTE 1
D-24"

V* SEE NOTE 1
MEMBRANE FILTRATION SYSTEM TRAIN No. 1

W-12"
S
AI
FC
POP-132
V* SEE NOTE 1
BFV-132
TO/FROM CIP PUMPS
I–1.13
TO PLANT SEWER

NOTES:

1. EQUIPMENT AND ITEMS DENOTED BY * TO BE PROVIDED BY THE MEMBRANE SYSTEM SUPPLIER (MSS) AND INSTALLED BY THE CONTRACTOR.
2. V* INDICATES VENDOR SUPPLIED, SEE DRAWINGS OF MSS EQUIPMENT P&IDs.
3. ISOLATION VALVES TO BE PROVIDED BY THE CONTRACTOR. MUST INCLUDE LOCKOUTS TO LOCK VALVES IN THE OPEN POSITION.
4. VENDOR PLC TO COMMUNICATE WITH NEW RECLAIMED WATER INTERCONNECT FACILITY PLC–RWIF THROUGH ETHERNET/IP. SIGNALS WILL BE COMMUNICATED TO CMS FROM THE PLC–RWIF OVER A FIBER OPTIC CONNECTION.

1620 West Fountainhead Pkwy
Suite 501
Tempe, Arizona 85282
Phone: (480) 893-8860
Improving Arizona's Infrastructure Since 1942
WILSON ENGINEERS

CITY OF CHANDLER
RECLAIMED WATER INTERCONNECT FACILITY

MEMBRANE FILTRATION SYSTEM TRAIN NO. 1 P&ID

CITY PROJECT NO. WW1901.203
WILSON PROJECT NO. 21007

Design: ER
Drawn: ER
Checked: PKP
Date: 02/2022
Wilson Project No.: 21007

Revision	Date	Description	By

VERIFY SCALES
BAR IS ONE INCH ON ORIGINAL DRAWING
0 — 1"
IF NOT ONE INCH ON THIS SHEET, ADJUST SCALES ACCORDINGLY

Registered Professional Engineer — 68430 — PHANI KIRAN PEDDINTI — DATE SIGNED 02/23/2022 — ARIZONA U.S.A.

Sheet No. I–1.04

XREFS: TB–WE–D; SEAL–PKP; SIGN–PKP

G:\PROJECT\21007\CADD\DESIGN\INSTRUMENTATION\21007 I–1.04.DWG, 2/23/2022 12:39:17 PM, PPeddinti, 1:1

AGENCY REVIEW

QA #22 Drawing

PERMEATE BACKPULSE MEMBRANE HIGH PRESSURE ALARM — PAH 107
PERMEATE BACKPULSE FLOW CONTROL VALVE OPEN/CLOSE COMMAND — ZC 109
PERMEATE PUMP No. 1 FLOW CONTROL VALVE OPEN/CLOSE COMMAND — ZC 110
BACKPULSE WATER FLOW CONTROL VALVE OPENED STATUS — ZIO 519
BACKPULSE WATER FLOW CONTROL VALVE OPEN/CLOSE COMMAND — ZC 519
BACKPULSE WATER FLOW CONTROL VALVE CLOSED STATUS — ZIC 519
PERMEATE PUMP No. 1 SPEED INDICATION — SI 100
PERMEATE PUMP No. 1 SPEED COMMAND — SC 100
PERMEATE PUMP No. 1 START/STOP COMMAND — XC 100
PERMEATE PUMP No. 1 RESET COMMAND — XC 100A
PERMEATE PUMP No. 1 COMMON FAIL ALARM — YA 100
PERMEATE PUMP No. 1 RUNNING STATUS — XIR 100
PERMEATE PUMP No. 1 IN AUTO MODE — XS 100
PERMEATE PUMP No. 1 HIGH FLOW ALARM — FAH 120
PERMEATE PUMP No. 1 FLOW INDICATION — FI 120
PERMEATE PUMP No. 1 LOW FLOW ALARM — FAL 120
PERMEATE PUMP No. 1 DISCHARGE FLOW CONTROL VLV OPEN/CLOSE COMMAND — ZC 121

PLC-RWIF
V*
PCP-001
MCC-RWIF

VFD-PP-100: TEMP TAH 100; VFD FAIL YA 100; PRESS PAH 112; RUNNING YR 100; DSC YL 100; KEYPAD; 480 VAC; POT SC 100; SPEED SI 100; RESET HMS 100A; START HMS 100B; STOP HMS 100C; HOA HS 100

YS 100 — DSC-PP-100

INSTRUMENT AIR FROM COMPRESSOR I–1.19

PERMEATE/BACKPULSE FROM/TO MEMBRANES I–1.04

BACKPULSE WATER FROM BACKPULSE TANK I–1.12

PSH 107 — PSH-107
AI — S — FC — POP-109 — BFV-109
FC — BFV-110 — POP-110
PI 111 — PI-111
TSH 100 — TSH-100
PSH 112 — PI 112 — PI-112
FIT 120 — 120 VAC — FIT-120
FE 120 — FE-120
CKV-123
ZSO 519 — ZSC 519 — BFV-519 — FC — POP-519
PMP-PP-100 PERMEATE PROCESS PUMP No. 1
AI — S — FC — POP-121 — BFV-121 V* SEE NOTE 1

W–14" — W–14" — W–12" — W–10" — W–12" — W–16" — W–1/4"

TO CIP TANK/BACKPULSE TANK/CCB I–1.12
TO PERMEATE TURBIDITY ANALYZER PANEL I–1.16

V* SEE NOTE 1

NOTES:

1. EQUIPMENT AND ITEMS DENOTED BY * TO BE PROVIDED BY THE MEMBRANE SYSTEM SUPPLIER (MSS) AND INSTALLED BY THE CONTRACTOR.
2. ISOLATION VALVES MUST INCLUDE LOCKOUTS TO LOCK VALVES IN THE OPEN POSITION.
3. V* VENDOR SUPPLIED.
4. VENDOR PLC TO COMMUNICATE WITH NEW RECLAIMED WATER INTERCONNECT FACILITY PLC–RWIF THROUGH ETHERNET/IP. SIGNALS WILL BE COMMUNICATED TO CMS FROM THE PLC–RWIF OVER A FIBER OPTIC CONNECTION.

1620 West Fountainhead Pkwy
Suite 501
Tempe, Arizona 85282
Phone: (480) 893-8860
Improving Arizona's Infrastructure Since 1942

WILSON ENGINEERS

CITY OF CHANDLER
RECLAIMED WATER INTERCONNECT FACILITY

MEMBRANE FILTRATION SYSTEM
PERMEATE PUMP NO. 1 P&ID

CITY PROJECT NO. WW1901.203
WILSON PROJECT NO. 21007

Revision	Date	Description	By

Design: ER
Date: 02/2022
Drawn: ER
Wilson Project No.: 21007
Checked: PKP

VERIFY SCALES
BAR IS ONE INCH ON ORIGINAL DRAWING
0 1"
IF NOT ONE INCH ON THIS SHEET, ADJUST SCALES ACCORDINGLY

Professional Engineer — 68430 — PHANI KIRAN PEDDINTI — REGISTERED 03-25-2022 — ARIZONA U.S.A.

Sheet No. I–1.08

XREFS: TB-WE-D; SEAL-PKP; SIGN-PKP

G:\PROJECT\21007\CADD\DESIGN\INSTRUMENTATION\21007 I–1.08.DWG, 2/23/2022 12:39:29 PM, PPeddinti, 1:1

AGENCY REVIEW

QA #22 Drawing

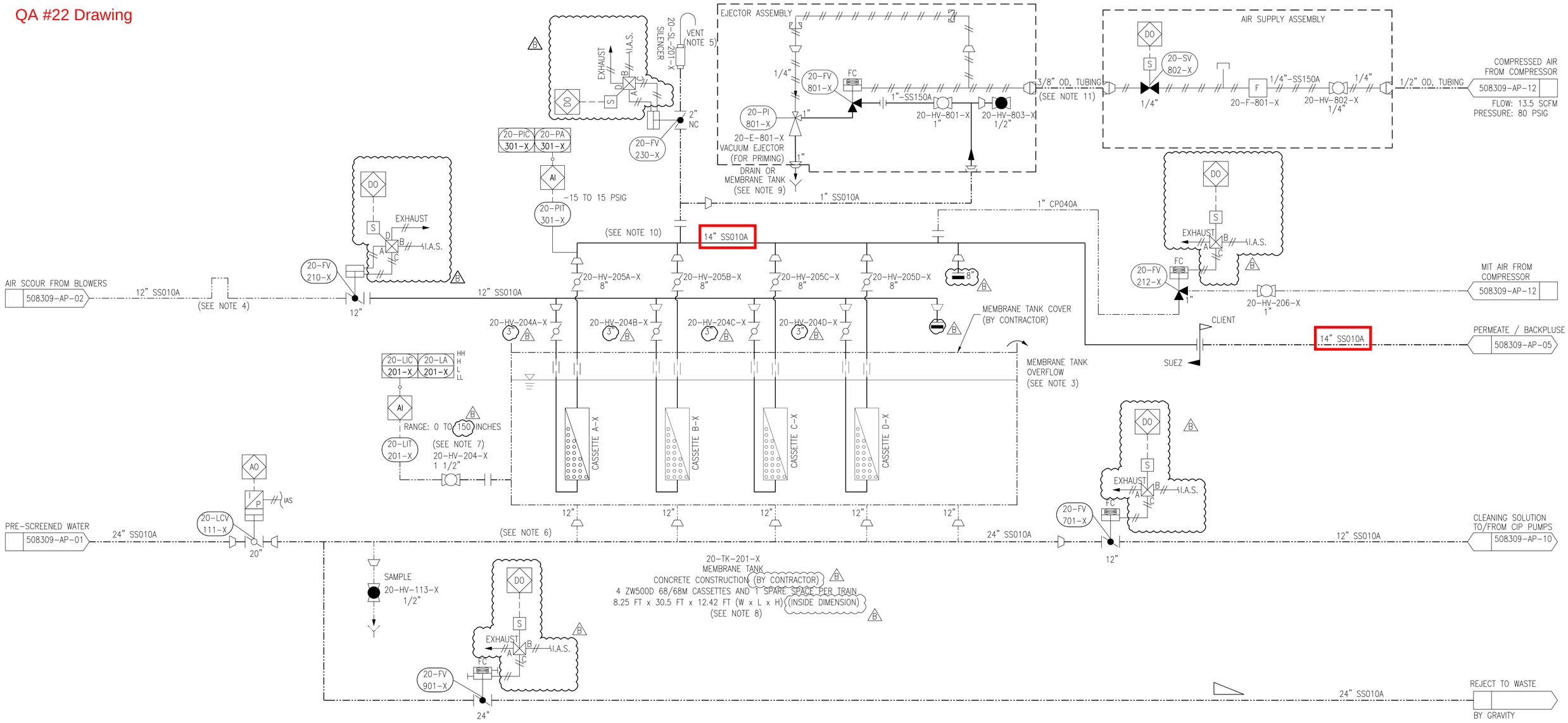

NOTES:

1. ALL DOTTED LINES/EQUIPMENT (BY CONTRACTOR). ALL DRAIN POINTS TO BE PLUMBED TO DRAIN BY CONTRACTOR.
2. DRAWING TYPICAL FOR TRAIN 1 TO 4. TAGS: "X" IS "1" FOR TRAIN 1, "2" FOR TRAIN 2 ETC FOR 4 TRAINS.
3. AN OVERFLOW IS REQUIRED FOR EACH TRAIN.
4. A PORTION OF THE AIR HEADER NEEDS TO BE LOCATED ABOVE THE HIGHEST WATER LEVEL IN THE MEMBRANE TANK.
5. PIPE VENT TO MEMBRANE TANK OR OTHER SAFE LOCATION.
6. DRAIN PIPE TO BE LOCATED AT VERY BOTTOM OF TANK. DRAIN PIPING LAYOUT TO ENSURE COMPLETE DRAINING OF MEMBRANE TANK TO WASTE OR CIP TANK.
7. LIT TO BE LOCATED AT VERY BOTTOM OF TANK.
8. CONCRETE MEMBRANE TANK MUST BE LINED APPROPRIATELY FOR MEMBRANE CLEANING CHEMICAL CONTACT. REFER TO SWTS DOCUMENT " CONCRETE TANK LINING GUIDELINES FOR ZEEWEED SYSTEMS" FOR DETAILS.
9. ANY EXPOSED PVC PIPES SHALL BE UV PROTECTED BY CONTRACTOR.
10. PROVIDE AN AIR GAP NEAR THE EJECTOR. DRAIN TO MEMBRANE TANK OR OTHER SAFE LOCATION. DO NOT REDUCE LINE SIZE.
11. MOUNT ON SIDE OF PIPE PIPING CONFIGURATED TO NOT ALLOW ANY AIR ACCUMULATION.
12. THE 3/8" TUBING THAT CONNECTS THE TWO SPOOLS TOGETHER IS TO BE PROVIDED AND INSTALLED ONSITE BY CONTRACTOR.
13. INSTRUMENT AIR SUPPLY ASSEMBLIES LOCATED OUTDOOR TO BE TEMPERATURE AND UV PROTECTED BY CONTRACTOR.
14. FEED CHANNEL AT 0 INCHES IS THE SAME ELEVATION AS THE MEMBRANE TANK AT TO BE DECIDED BY CLIENT.

SUEZ WTS CONTROLLED DOCUMENT

REV	DESCRIPTION	ECO	DWN	APPR	APPR	DATE
B	REVISED AS PER CLIENT COMMENTS		AS	CVK	DC	25 FEB 22
A	INITIAL RELEASE		SRP	CVK	DC	20 DEC 21

TOLERANCES UNLESS NOTED
DECIMALS .X .XX .XXX
ANGLES FRAC

PROPRIETARY AND CONFIDENTIAL: THIS DRAWING AND ALL INFORMATION AND KNOWLEDGE CONTAINED OR REFERRED HEREIN ARE THE CONFIDENTIAL AND PROPRIETARY PROPERTY OF SUEZ AND AS SUCH ARE INSTRUMENTS OF SERVICE FOR USE SOLELY WITH RESPECT TO THIS PROJECT. THESE INSTRUMENTS OF SERVICE SHALL NOT BE REPRODUCED, TRANSMITTED, DISCLOSED OR USED OTHERWISE IN WHOLE OR IN PART, WITHOUT PRIOR WRITTEN AGREEMENT BY SUEZ AND MUST BE IMMEDIATELY RETURNED OR DESTROYED UPON REQUEST.

CUSTOMER INFORMATION
CITY OF CHANDLER, AZ
RWIF

P&ID,
MEMBRANE TANKS

DRAWING NUMBER	REVISION
508309-AP-03	B
REF.: -	DOC. OWNER:

PROJECT NO.	PART/MATERIAL NO.	SCALE	SIZE	SHEET
508309		NONE	D	1 OF 1

LAST SAVED: Friday, February 25, 2022 10:43:38 PM

FILE LOCATION: C:_ADSK\vault\MAM\508309 - Chandler RWIF\1. PID and P&ID\508309-AP-03.dwg

QA #22 Drawing

NOTES:

1. ALL DOTTED LINES/EQUIPMENT BY CONTRACTOR. B
   ALL DRAIN POINTS TO BE PLUMBED TO DRAIN BY CONTRACTOR.
2. DRAWING TYPICAL FOR ALL TRAINS 1 TO 4. TAGS: "X" IS "1" FOR TRAIN 1, "2" FOR TRAIN 2 ETC FOR 4 TRAINS.
3. FOLLOW MANUFACTURER'S RECOMMENDATIONS REGARDING INSTALLATION REQUIREMENTS, INCLUDING NUMBER OF STRAIGHT PIPE RUNS. PIPING MUST BE ARRANGED TO ENSURE MAGMETER REMAINS FLOODED AT ALL TIMES.
4. PROCESS PUMP DISCHARGE PRESSURE MUST ALLOW FOR FILLING BACKPULSE AND CIP TANK.
5. FINAL SIZING AND DESIGN TO BE VERIFIED DURING DETAILED PROJECT ENGINEERING.
6. INITIAL DESIGN CAPACITY IS 10MGD. FUTURE CAPACITY IS DESIGNED FOR 12.5MGD WITH SPARE

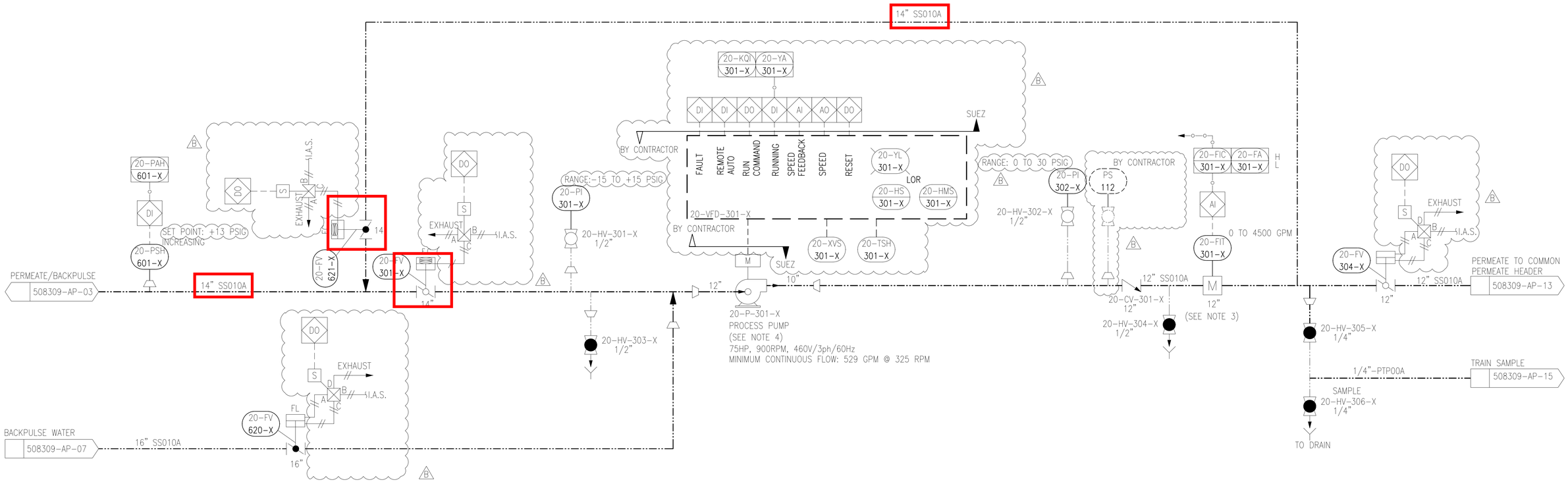

DESIGN DUTY POINTS	INITIAL			FUTURE		
FLOW CONDITION	FLOW, GPM	TDH, FT		FLOW, GPM	TDH, FT	
	PER TRAIN	MAX.	MIN.	PER TRAIN	MAX.	MIN.
MIN. PERMEATE	1,735	38	15	2,170	39	15
MAX. PERMEATE	2,880	44	19	3,720	53	28
BACKPULSE	2,985	53	16	3,720	53	17

SUEZ WTS CONTROLLED DOCUMENT

REV	DESCRIPTION	ECO	DWN	APPR	APPR	DATE
B	REVISED AS PER CLIENT COMMENTS	-	AS	CVK	DC	25 FEB 22
A	INITIAL RELEASE	-	SRP	CVK	DC	20 DEC 21

PROPRIETARY AND CONFIDENTIAL: THIS DRAWING AND ALL INFORMATION AND KNOWLEDGE CONTAINED OR REFERRED HEREIN ARE THE CONFIDENTIAL AND PROPRIETARY PROPERTY OF SUEZ AND AS SUCH ARE INSTRUMENTS OF SERVICE FOR USE SOLELY WITH RESPECT TO THIS PROJECT. THESE INSTRUMENTS OF SERVICE SHALL NOT BE REPRODUCED, TRANSMITTED, DISCLOSED OR USED OTHERWISE IN WHOLE OR IN PART, WITHOUT PRIOR WRITTEN AGREEMENT BY SUEZ AND MUST BE IMMEDIATELY RETURNED OR DESTROYED UPON REQUEST.

TOLERANCES UNLESS NOTED
DECIMALS .X .XX .XXX
ANGLES FRAC

suez

CUSTOMER INFORMATION
CITY OF CHANDLER, AZ
RWIF

P&ID
PROCESS PUMPS

DRAWING NUMBER: 508309-AP-05
REVISION: B
REF.: -
DOC. OWNER:
PROJECT NO.: 508309
PART/MATERIAL NO.:
SCALE: NONE
SIZE: D
SHEET: 1 OF 1

LAST SAVED: Friday, February 25, 2022 1:40:39 PM

QA #25 Attachment

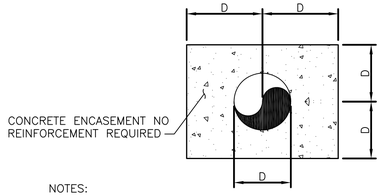

NOTES:

1. D=PIPE OUTSIDE DIAMETER OR 6" MINIMUM WHICH EVER IS GREATER.
2. REINFORCEMENT IS NOT REQUIRED.
3. CLASS "B" CONCRETE 3000 PSI.
4. PIPES PASSING UNDER WALLS SHALL BE WRAPPED IN VISQUEEN AND ENCASED.
5. PIPES SHALL BE LAID SO THAT FITTINGS, FLANGES, JOINTS, ETC. ARE NOT ENCASED.
6. ENCASEMENTS FOR FUTURE PIPES SHALL ENCASE FLANGE BY FLANGE DIP.
7. ENCASEMENT SHALL BE SEPARATED FROM FOOTING BY A MINIMUM OF 6" OF COMPACTED SOIL.
8. CLEAN CUT VERTICAL WALLS OF TRENCH MAY BE USED AS FORMS.
9. ENCASEMENT SHALL NOT BE ALL OR PART OF A THRUST BLOCK.
10. PIPE ENCASEMENTS FOR FUTURE USE SHALL BE CAPPED.

CONCRETE ENCASEMENT

DETAIL	102
NOT TO SCALE	–

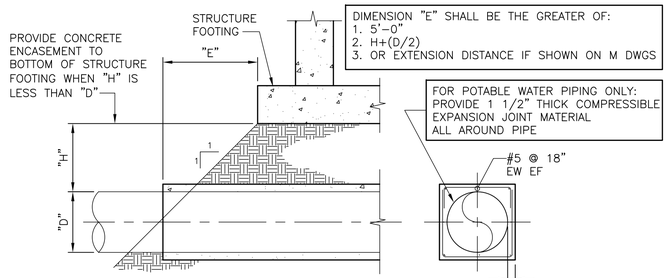

ALL PIPING IS TO BE ENCASED AS FOLLOWS:

ALL PIPE, CONDUIT, ELECTRICAL LINES ETC. WHICH ENCOMPASS AN AREA OF 8", EITHER BY ITSELF, OR THE CO-LOCATION OF SMALLER ELEMENTS EQUALING 8" SHALL BE ENCASED IN CONCRETE WHEN THEY ARE LOCATED LESS THAN 2'-0" BELOW BELOW BOTTOM OF CONCRETE SLAB, FOUNDATION ETC. THIS REQUIREMENT MUST ALSO TAKE INTO ACCOUNT ALL APPLICABLE CODES AND REQUIREMENTS WHERE ENCASEMENT IS NOT ALLOWED BY SAID CODES. WHERE ENCASEMENT IS NOT PERMITTED, ELEMENTS WHICH ARE REGULATED SHALL BE PLACED AS THE CODE REQUIRES FOR THAT PARTICULAR ITEM OR ITEMS. IN THOSE CASES THE ITEM WHICH MAY NOT BE ENCASED SHALL BE PLACED MORE THAN 2'-0" BELOW THE STRUCTURAL CONCRETE.

CONCRETE ENCASEMENT FOR PIPES UNDER STRUCTURES

DETAIL	103
NOT TO SCALE	–

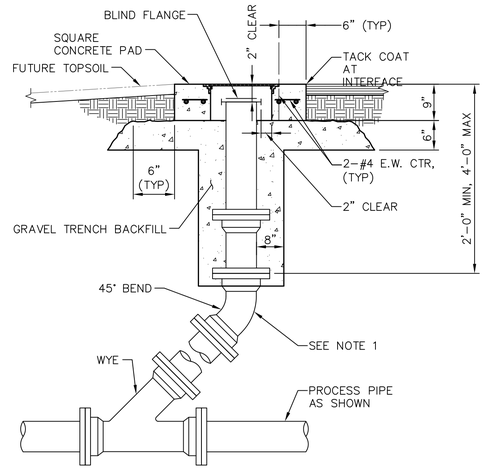

NOTE:
1. SAME SIZE AS PROCESS PIPE UP TO 8" MAX.

PRESSURE CLEANOUT

DETAIL	104
NOT TO SCALE	–

RFI #25. Detail will be provided in the "For Construction" submittal.

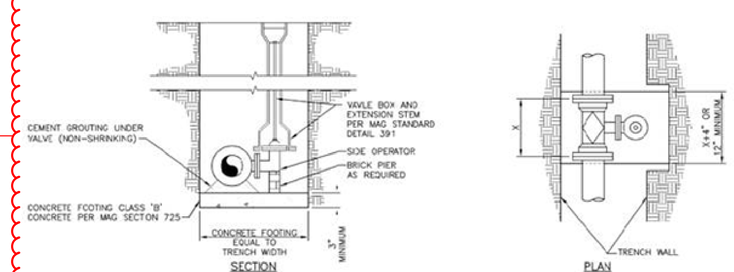

NOTES:
1.CONCRETE OR MASONRY PIER SHALL NOT BE REQUIRED FOR TOP MOUNTED OPERATOR.
2.VALVE BOX COVER, SEE COC STANDARD DETAIL C-307 FOR POTABLE WATER VALVES.
3.VALVE BOXES IN UNPAVED AREAS SHALL HAVE A CONCRETE COLLAR PER COC STANCARD DETAIL C-317.

BURIED PLUG, BUTTERFLY AND GATE VALVES 12" AND SMALLER

DETAIL	101
NOT TO SCALE	–

WILSON ENGINEERS
1620 West Fountainhead Pkwy
Suite 501 85282
Tempe, Arizona
Phone: (480) 893-8860
Improving Arizona's Infrastructure Since 1942

CITY OF CHANDLER
RECLAIMED WATER INTERCONNECT FACILITY

CIVIL DETAILS – 1

CITY PROJECT NO. WW1901.203
WILSON PROJECT NO. 21007

Design: HA	Drawn: AJC	Checked: SR
Date: 02/2022	Wilson Project No.: 21007	

Rev#	Date	Description	By

VERIFY SCALES
BAR IS ONE INCH ON ORIGINAL DRAWING
0 1"
IF NOT ONE INCH ON THIS SHEET, ADJUST SCALES ACCORDINGLY

Registered Professional Engineer CERTIFICATE NO. 30185 UDAY K. GANDHE Date Signed 02/25/2022 ARIZONA U. S. A.

Registered Professional Engineer CERTIFICATE NO. 41008 SREERAM RENGARAJ Date Signed 02/25/2022 ARIZONA U. S. A.

Sheet No. C-7.01

G:\PROJECT\21007\CADD\DESIGN\CIVIL\21007C7.01.DWG, 2/25/2022 4:32:42 PM, acantella, 1:2.1887

AGENCY REVIEW

QA #32 Drawing

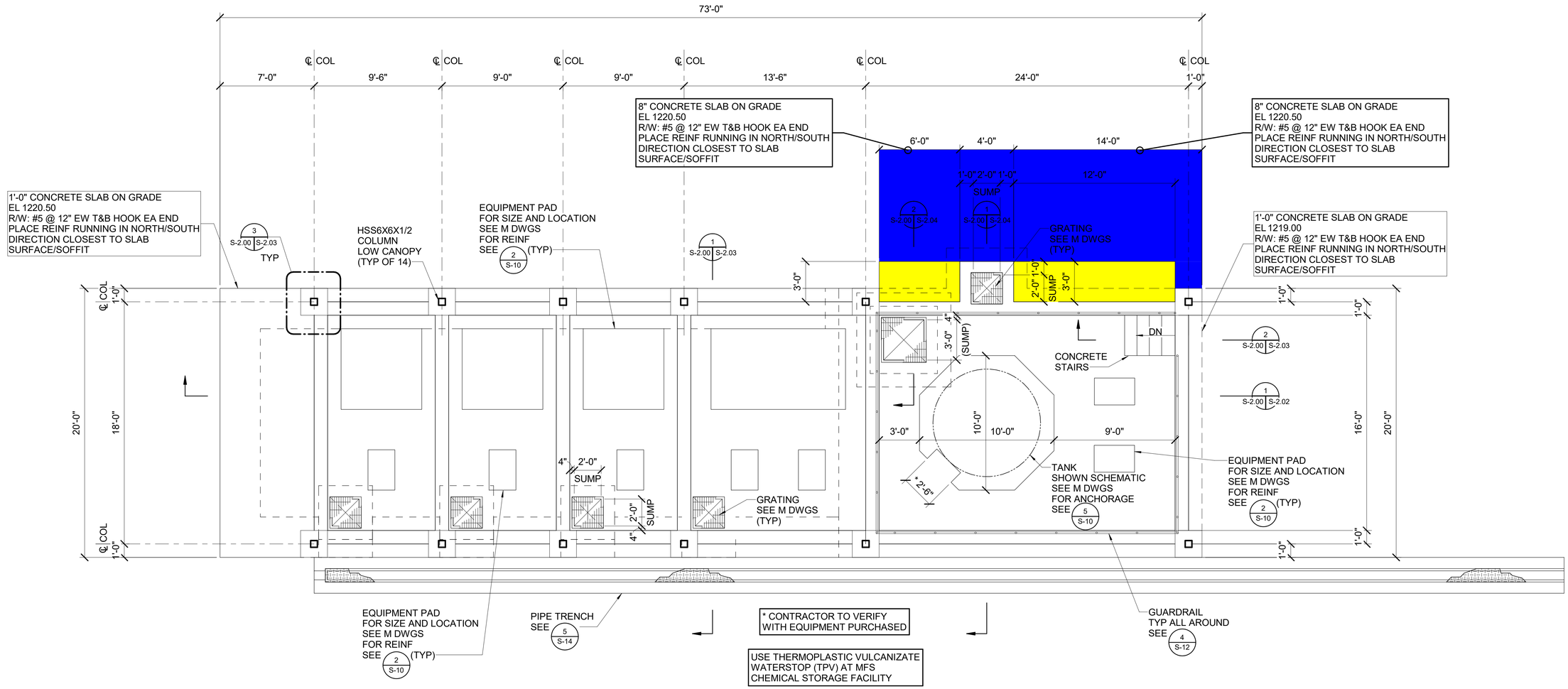

CHEMICAL STORAGE FOUNDATION PLAN

1/4" = 1'-0"

GANNETT FLEMING

1620 West Fountainhead Pkwy
Suite 501
Tempe, Arizona 85282
Phone: (480) 893-8860

Improving Arizona's
Infrastructure Since 1942

WILSON ENGINEERS

CITY OF CHANDLER
WATER RECLAMATION FACILITY
STRUCTURAL
MFS CHEMICAL STORAGE FACILITY
FOUNDATION PLAN

CITY PROJECT NO.WW1901.203
WILSON PROJECT NO. 21007

Design: SJN	Drawn: MWK	Checked: TFW
Date: 02/2022	Wilson Project No. 21007	

Rev#	Date	Description	By

VERIFY SCALES

BAR IS ONE INCH ON ORIGINAL DRAWING

0 1"

IF NOT ONE INCH ON THIS SHEET, ADJUST SCALES ACCORDINGLY

Registered Professional Engineer
CERTIFICATE NO.
35234
TIM F. WONG
Date Signed 2/24/2022
ARIZONA, U.S.A.

Sheet No. S-2.00

2/24/2022 4:02:48 PM BIM 360://068680-Wilson_Chandler-RWIF/068680_Doc_Model_S_Central_R20.rvt

AGENCY REVIEW

QA #32 Drawing

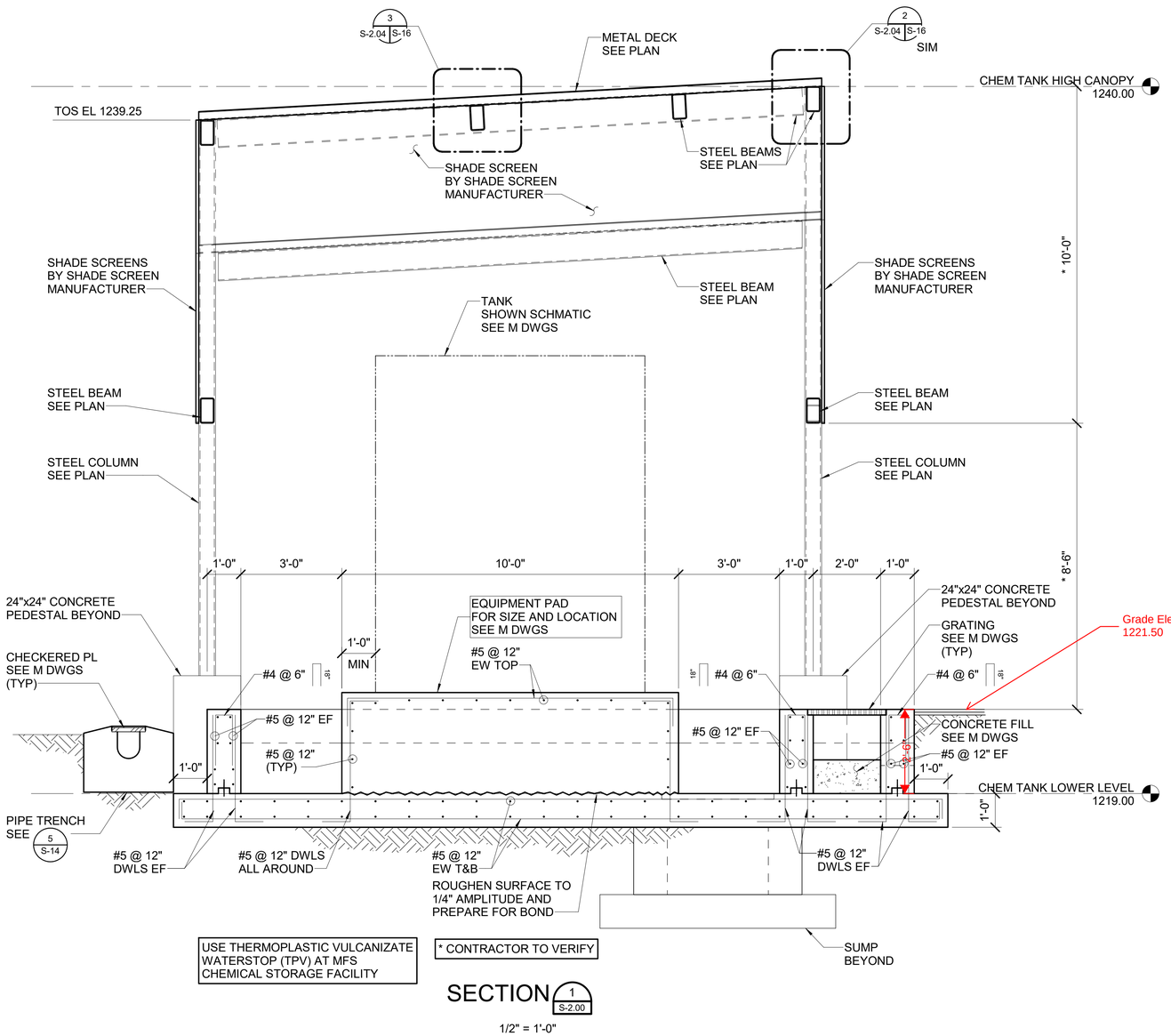

USE THERMOPLASTIC VULCANIZATE WATERSTOP (TPV) AT MFS CHEMICAL STORAGE FACILITY

* CONTRACTOR TO VERIFY

SECTION 1 S-2.00

1/2" = 1'-0"

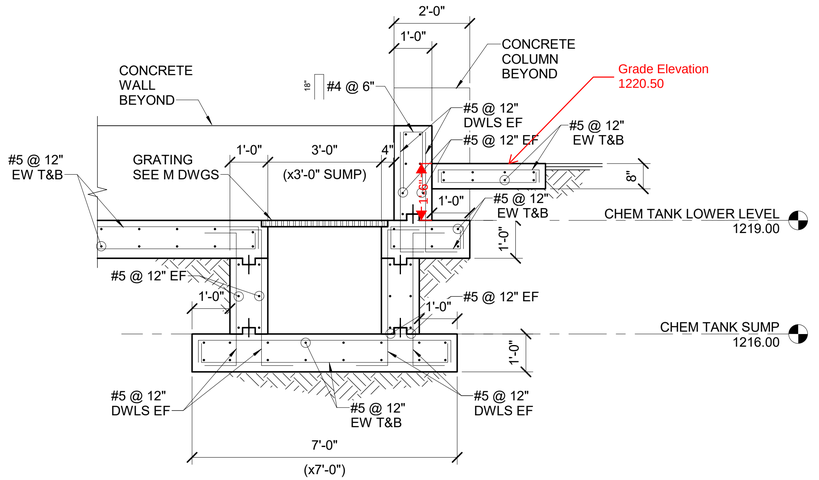

SECTION 2 S-2.00

1/2" = 1'-0"

1620 West Fountainhead Pkwy
Suite 501
Tempe, Arizona 85282
Phone: (480) 893-8860

Improving Arizona's
Infrastructure Since 1942

WILSON ENGINEERS

CITY OF CHANDLER
WATER RECLAMATION FACILITY
STRUCTURAL
MFS CHEMICAL STORAGE FACILITY
SECTIONS AND DETAILS 3

CITY PROJECT NO. WW1901.203
WILSON PROJECT NO. 21007

Design: SJN	Drawn: MWK	Checked: TFW
Date: 02/2022	Wilson Project No. 21007	

Rev#	Date	Description	By

VERIFY SCALES
BAR IS ONE INCH ON ORIGINAL DRAWING
0 1"
IF NOT ONE INCH ON THIS SHEET, ADJUST SCALES ACCORDINGLY



GANNETT FLEMING

Sheet No. S-2.04

QA #33 & 34 Drawings

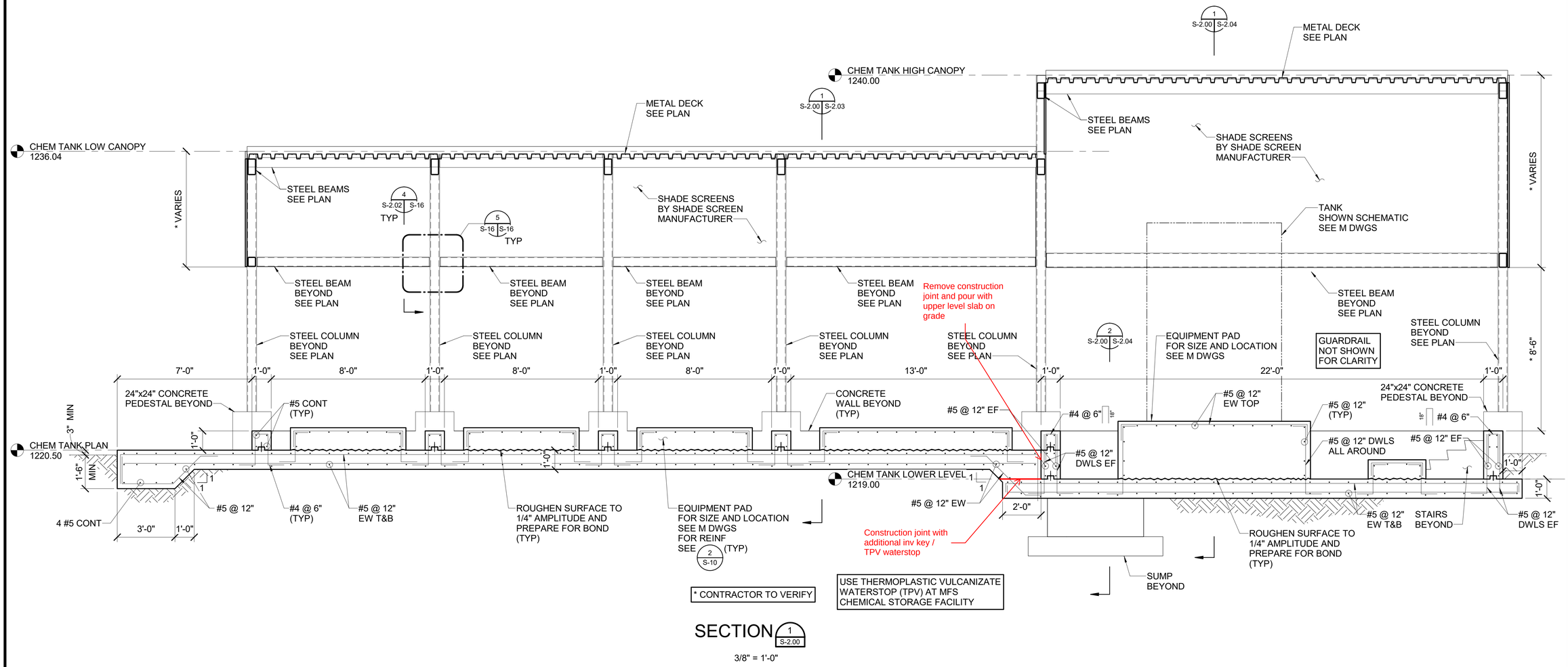

SECTION 1 S-2.00

3/8" = 1'-0"

1620 West Fountainhead Pkwy
Suite 501
Tempe, Arizona 85282
Phone: (480) 893-8860

Improving Arizona's
Infrastructure Since 1942

WILSON ENGINEERS

CITY OF CHANDLER
WATER RECLAMATION FACILITY
STRUCTURAL
MFS CHEMICAL STORAGE FACILITY
SECTIONS AND DETAILS 1

CITY PROJECT NO.WW1901.203
WILSON PROJECT NO. 21007

Design:SJN	Drawn: MWK	Checked: TFW
Date: 02/2022	Wilson Project No. 21007	

Rev#	Date	Description	By

VERIFY SCALES
BAR IS ONE INCH ON ORIGINAL DRAWING
0 1"
IF NOT ONE INCH ON THIS SHEET, ADJUST SCALES ACCORDINGLY

Registered Professional Engineer
CERTIFICATE NO.
35234
TIM F. WONG
Date Signed 2/24/2022
ARIZONA, U.S.A.

GANNETT FLEMING

Sheet No. S-2.02

QA #37 Attachment

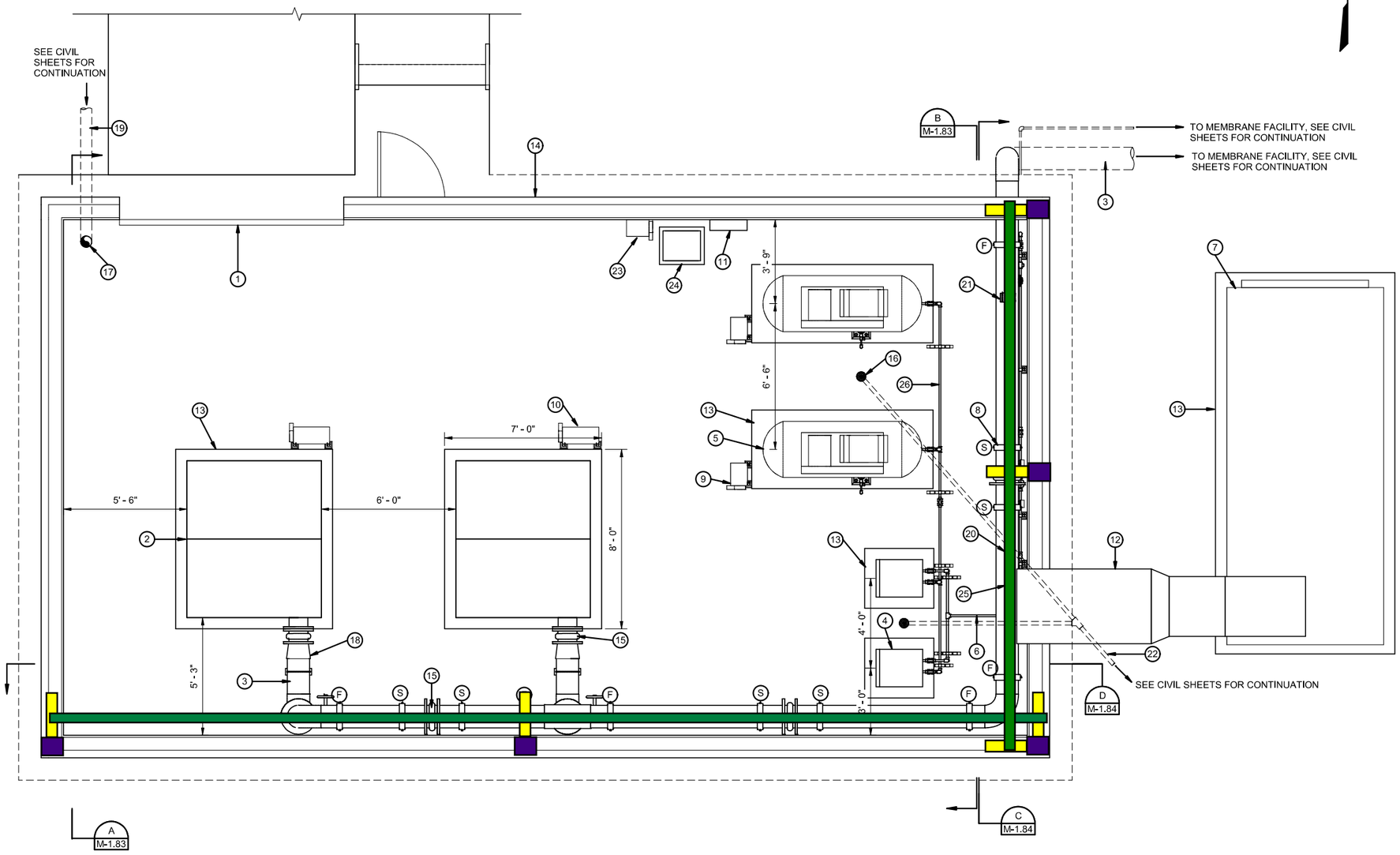

OVERALL PLAN
3/8" = 1'-0"

316 beam provided by others

PEMB Frame Columns

Column Stubs by PEMB

NOTE:
F: FIXED SUPPORT
S: SLIDING SUPPORT

KEYED NOTES

1. 10'-0" x 10'-0" ROLL UP DOOR
2. POSITIVE DISPLACEMENT BLOWER (TYP)
3. 12" DIA INSULATED SCH 10 SS PROCESS AIR SUPPLY PIPE
4. AIR DRYER (TYP)
5. AIR COMPRESSOR (TYP)
6. 1" DIA STAINLESS STEEL COMPRESSED AIR PIPE
7. EVAPORATIVE COOLER UNIT, SEE HVAC SHEETS FOR DETAILS
8. HANGING PIPE SUPPORT (TYP), SEE DETAIL 503 SHEET M-7.05
9. AIR COMPRESSOR DISCONNECT SWITCH (TYP), SEE ELECTRICAL SHEETS FOR DETAILS
10. POSITIVE DISPLACEMENT BLOWER DISCONNECT SWITCH (TYP), SEE ELECTRICAL SHEETS FOR DETAILS
11. LIGHTING PANEL, SEE ELECTRICAL SHEETS FOR DETAILS
12. HVAC DUCT, SEE HVAC SHEETS FOR DETAILS
13. EQUIPMENT PAD (TYP), SEE STRUCTURAL SHEETS FOR DETAILS
14. PRE-FABRICATED BUILDING, SEE ARCHITECTURAL SHEETS FOR DETAILS
15. RUBBER EXPANSION JOINT (TYP), SEE DETAIL 301 SHEET M-7.03
16. FLOOR DRAIN (TYP), SEE DETAIL 704 SHEET M-7.07
17. FIRE RISER, SEE ARCHITECTURAL SHEETS FOR DETAILS
18. 10" X 12" REDUCER (TYP)
19. 6" DIA FIRE PROTECTION MAIN
20. PRESSURE INDICATING TRANSMITTER
21. THERMAL MASS FLOW METER, SEE DETAIL 604 SHEET M-7.06
22. 2" DIA PVC DRAIN PIPE
23. DISCONNECT SWITCH, SEE ELECTRICAL SHEETS FOR DETAILS
24. TRANSFORMER, SEE ELECTRICAL SHEETS FOR DETAILS
25. FLOW SWITCH, SEE ELECTRICAL SHEETS FOR DETAILS
26. 1" DIA COPPER COMPRESSED AIR PIPE

1620 West Fountainhead Pkwy
Suite 501
Tempe, Arizona 85282
Phone: (480) 893-8860
Improving Arizona's Infrastructure Since 1942
WILSON ENGINEERS

CITY OF CHANDLER
RECLAIMED WATER INTERCONNECT FACILITY

RWIF BLOWER BUILDING OVERALL PLAN
CITY PROJECT NO. WW1901.203
WILSON PROJECT NO. 21007

Design: KP	Drawn: JMJ	Checked: SR
Date: 02/2022	Wilson Project No. 21007	

Rev#	Date	Description	By

VERIFY SCALES
BAR IS ONE INCH ON ORIGINAL DRAWING
0 1"
IF NOT ONE INCH ON THIS SHEET, ADJUST SCALES ACCORDINGLY

Registered Professional Engineer (Civil) CERTIFICATE NO. 30185 UDAY K. GANDHE Date Signed 02/28/2022 ARIZONA U.S.A.

Registered Professional Engineer (Civil) CERTIFICATE NO. 41006 SHEERAM RENGIRAJ Date Signed 02/28/2022 ARIZONA U.S.A.

Sheet No. M-1.82

2/25/2022 3:05:26 PM G:\PROJECT_Revit\05 Chandler Airport WRF\21007\3.0 Blower Building.rvt

AGENCY REVIEW

QA #39 Attachment - Reference Page 197 in Supplemental Documents

Submittal Review Response

Project Name: *OWRF Expansion Project*
Submittal No.: *e13466-01-0*
Due Date: *asap*
Date To Engineer: *07/18/16*

Client: City of Chandler - WW1301.402
Carollo Project No.: 9385A.30
Contractor: Sundt/McCarthy
Spec. Section No.: e13466
Submittal Name: Tote Weight Scale
Reviewed By: *Kelly Scharber and Kirk Gardiner*

SUBMITTAL REVIEW
Review is for general compliance with contract documents. No responsibility is assumed by Carollo for correctness of quantities, dimensions, and details. No deviation or variation is accepted unless specifically addressed in these review comments. Refer to Section 01330(01_33_00) for additional requirements. The Contractor shall assume full responsibility for coordination with all other trades and deviations from contract requirements.

☐	Reviewed: No Corrections Noted.
☒	Resubmittal Not Required: See Comments and Make Corrections Noted.
☐	Correct and Resubmit: See Comments and Make Corrections Noted.
☐	Rejected: See Comments.
☐	Receipt Acknowledged: Filed for Record.

Re□ew co□ □e□ts □re □s □o□ows□

□ectr□c□□Co□ □e□ts□Resu□□ □tt□□□ot Re□u□red

□□ De□□□t□o□□C□□r□□c□t□o□ □□ use o□D□□t□□□stru□e□t□Mode□□□D□□□ □s rep□□ce□ e□t □s □c□□ow□ed□ed□

□□ De□□□t□o□□C□□r□□c□t□o□ □□ O□M □ □□u□□sh□□□e □□c□uded per spec□□c□t□o□ □□□□□□

□□□e□Ste□e □□cho□□s□W□so□ □□□□eers
D□te□□□□□□□

□□stru□e□t□t□o□ Co□ □e□ts□
□□ □

□□□e□
D□te□

Mech□□□c□□Co□ □e□ts□
□□ Pro□de sc□ē □u□rd□□□st□□□sc□ē set □□c□ □ □□ch □ro□ west ed□e o□the s□□□□

QA #78 - 12 to 36 C Wall Pipe Joint Detail

Reinforced Concrete Pipe

Single Offset Joint, 12" - 36"
Profile, C-Wall - El Mirage

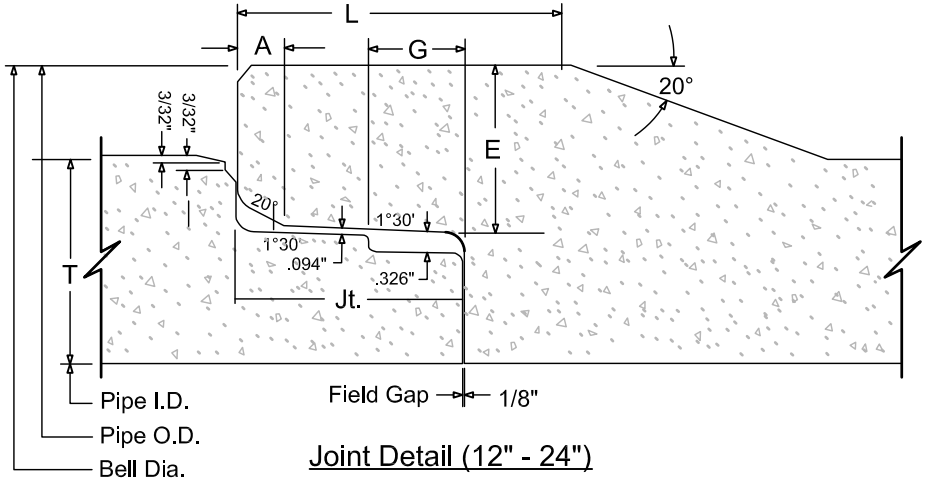

Joint Detail (12" - 24")

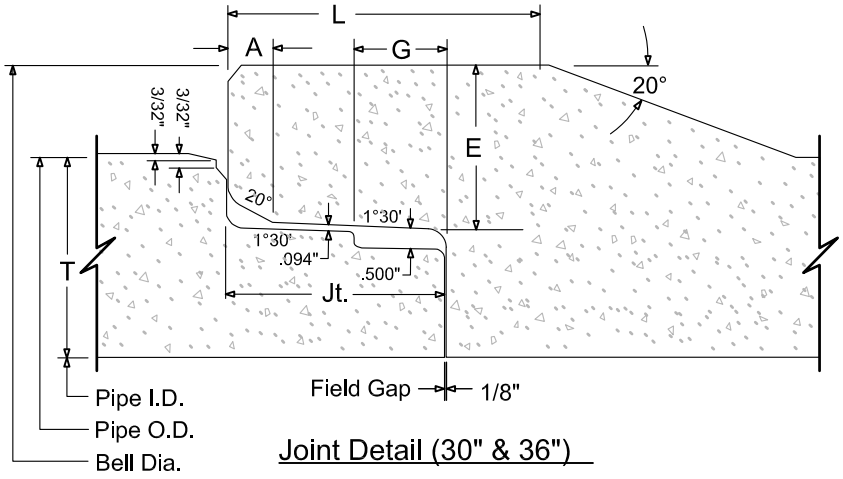

Joint Detail (30" & 36")

Pipe & Joint Data

Pipe I.D. (in.)	Wall T (in.)	Pipe O.D. (in.)	Bell Dia. (in.)	E (in.)	L (in.)	G (in.)	A (in.)	Jt. (in.)	Gasket Style	Tons / Foot	Tons / Section	Length (ft.)	Max. Allow. Fld. Gap. (in.)
12	2 3/4	17 7/8	20	2.359	5	1 3/4	7/8	3 5/8	Profile	0.0725	0.58	8-0	25/32
15	3	21 3/8	24	2.609	5	1 3/4	7/8	3 5/8	Profile	0.095	0.76	8-0	25/32
18	3 1/4	24 7/8	28	2.922	5	1 3/4	7/8	3 5/8	Profile	0.125	1.0	8-0	25/32
24	3 3/4	31 3/4	35 1/2	3.131	6 1/2	1 3/4	7/8	3 7/8	Profile	0.1838	1.47	8-0	25/32
30	4 1/4	38 3/4	43 1/4	3.623	7	1 3/4	7/8	4	Profile	0.2575	2.06	8-0	25/32
36	4 3/4	45 5/8	51 1/4	4.185	7 1/2	1 3/4	7/8	4	Profile	0.3313	2.65	8-0	25/32

-No Scale-
All dimensions subject to allowable specification tolerances.

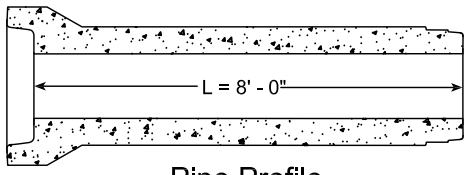

Pipe Profile

Note:

A. All dimensions are nominal and within the permissible variations of ASTM C-76.

FORTERRA

REVISIONS			DRAWN BY: MAH
A	–	–	PLANT: El Mirage
B	–	–	SOLD BY: –
C	–	–	SCALE: NO SCALE
D	–	–	ORDER#

SINGLE OFFSET JOINT
12" TO 36"
PROFILE, C-WALL
EL MIRAGE, AZ PLANT

DATE: 8/25/17 8.5" x11" PAGE 2

QA #80 - Chemical Metering Pump Table

Q/A #80: Chemical Metering Pump Design Criteria

From: Sean E. Zimmerman <sezimmerman@wilson-engineers.com>
Sent: Wednesday, March 23, 2022 5:28 PM
To: House, Jason <JHouse@mccarthy.com>
Cc: Kileigh Phillips <kphillips@wilson-engineers.com>
Subject: RE: RWIF Chemical Metering Pumps

Hi Jason,

Please find the latest chemical metering pump design criteria table below:

Chemical	Chemical Concentration (%)	Location/Facility	Maximum Capacity (gph)
ACH	40	ACH Facility	5.00
Sodium Hypochlorite	12.5	MFS Chemical Facility	1050
Citric Acid	50	MFS Chemical Facility	810
Sulfuric Acid	50	MFS Chemical Facility	90
Sodium Bisulfite	38	MFS Chemical Facility	270
Sodium Hydroxide	25	MFS Chemical Facility	720
Sodium Hypochlorite	12.5	Modified Bulk Sodium Hypochlorite Facility	14

These were specified in Suez's most recent revision of the P&IDs (Shop Drawing Submittal #1). Please use these numbers for the metering pump vendor bids.

CITY OF CHANDLER, ARIZONA

Reclaimed Water Interconnect Facility

Project No. WW1901.203

ADDENDUM NO. 1

Date: 02/28/2022

The attention of the contractor submitting GMP for the above referenced project is called to the following addendum to the plans & specifications. The items set forth herein, whether of omission, addition, substitution, or clarification, are all to be included as a procurement package as part of proposed work. Specifications and design drawing set are included for vendor review. The vendor shall review the attached information and acknowledge the enclosed drawings with reference to conformance to the layout of the equipment. Any modifications required for the proper functioning of the proposed equipment shall be included along with the proposal. Further, the vendor's review shall include confirmation of the proposed preliminary layout and if necessary, shall propose modifications as necessary for optimum operation of the proposed equipment (such as modifications to the structure footprint and spacing between equipment). If no information is provided in the bid package, it is assumed that the proposed equipment will operate as specified with the drawing set and the proposed layout that is provided with this addendum. The vendor shall also include the duration required for shop drawing preparation and the duration from the time of approved shop drawings to delivery of equipment on-site with the bid package. In addition, the vendor shall provide expedited durations for shop drawing preparation and equipment delivery from time of approved shop drawings along with associated costs in the bid package as a separate line item.

Make the following change and/or additions/deletions to the Contract Documents.

1. Specification Section 11314 End Suction Centrifugal Pump

   DELETE end suction centrifugal pump criteria outlined in section 1.4.A table and **REPLACE WITH** table below.

Service	Permeate Pump	CIP Pump
Quantity	5 (4 Service, 1 Spare)	2
Rated Design Flow (gpm)	3,720	2096
Rated Design Head (feet)	53	17
Minimum Overall Efficiency (%)	85	82
Maximum Motor Horsepower	75	15
Maximum Speed (rpm)	900	900
Voltage	460	460
Power Phases	3	3
Power Frequency (Hz)	60	60
Discharge Flow Diameters (in.)	10	14
Suction Flow Diameter (in.)	12	14

DELETE "wetted pump materials shall be NSF certified" in paragraph 2.2.A.1.a.1 and **REPLACE WITH** "Wetted pump material shall be NSF-61 certified"

2. Specification Section 11371 Positive Displacement Blowers

ADD "Or Approved equal" after 2.1.A .

DELETE specifications listed in 2.2.A Positive Displacement Blower and **REPLACE WITH** specifications below.

A. Positive Displacement Blower:
   1. Number of Blowers: 2 (1 duty, 1 standby).
   2. Rated Speed: 2,164 rpm.
   3. Rated Air Flow at Rated Speed: 1,895 scfm.
   4. Required Air Flow Range: 600 to 3,000 scfm.
   5. Inlet Piping Pressure: 0.20 pound per square inch.
   6. Rated Discharge Pressure: 19 psig.
   7. Rated Inlet Pressure: 14 psia
   8. Inlet Temperature: 25° to 110° Fahrenheit
   9. Inlet Humidity: 0% to 50%.
   10. Approximate Site Elevation: 1,200 feet above sea level.

B. Motor: As specified in Section 16225, Electric Motors 250 Horsepower or Less, except as otherwise specified or supplemented below:
   1. Motor Power Supply: 480 volts, 3 phase, 60 hertz.
   2. Motor Horsepower: 125.
   3. Motor Speed, Maximum: 2,400 rpm.
   4. Motor Enclosure: TEFC.
   5. Motor Service Factor: 1.15 at altitude.

3. Specification Section 11372 Air Compressor

ADD the following after Section 2.2.D:

"E. Connections
   1. Inlet and outlet: threaded 1" NPT
   2. Automatic brass drain: threaded 1/8" FPT"

4. Specification Section 11500 Membrane Equipment System

DELETE "*During backpulse (5 – 25 min./train, every 2 hours); During Maintenance Clean (15 – 30 minutes/train, once per day); During Recovery Clean (6 – 25 hours/train, once per month)" after Section 2.2.A.2. Table 1 and **REPLACE WITH** "*The membrane system will be designed to increase flows through online trains to accommodate constant inlet feed flow to the membranes up to 10 MGD (net)/95% = 7,310 gpm (net) during Maintenance Cleans, Membrane Integrity Tests, and Backwashing, with all other trains otherwise in service".

DELETE "During Recovery Clean of one Train, where three Trains are in operation, production shall meet 10 MGD. This applies even during Backpulse and Maintenance Clean cycles of one of the three operating trains." From Section 2.3.A.2.b and **REPLACE WITH** "b. If a train is off-line for Recovery Clean or for any other equipment repair or maintenance, then the influent flow will be decreased. The feed flow that can

be accommodated with one train out of service for Recovery Clean or for any other equipment repair or maintenance is 7,310 gpm (net) x 3/4 = 5,482 gpm (net)."

5. Specification Section 13127 Extruded Flat Panel Covers

   REPLACE Specification Section 13127 in entirety with attached Specification Section 13127.

If you have any questions, please e-mail me at: SRengaraj@wilson-engineers.com.

Sreeram Rengaraj, P.E.
Wilson Engineers LLC



SECTION 13127

EXTRUDED FLAT PANEL COVERS

PART 1 - GENERAL

1.1 SUMMARY

A. Furnish all labor, materials, and equipment required to design, fabricate, deliver, and install a new extruded flat aluminum cover structure with all appurtenances required for a complete and operational installation.
   1. Membrane Trains 1 thru 4.
   2. Membrane Facility Common Inlet Channel.
   3. CIP Tank.

B. The enclosure shall be a flat cover structure conforming to the dimensions indicated on the Drawings, a rectangle aluminum structure with stainless steel structure members.

C. All metal components of the aluminum structure shall be aluminum with cold-formed stainless steel. No galvanized, painted, or plated steel shall be used.

D. The structure shall be designed as a substantially airtight system under all design load and temperature conditions. All raw edges of the aluminum panels shall be covered and sealed.

E. The cover manufacturer must coordinate with the membrane equipment supplier for design of the covers, design of supporting structural members, and coordination of cover cutouts to accommodate membrane equipment system piping. The membrane basin aluminum cover design must be fully integrated with the membrane equipment system design.

F. The cover manufacturer shall provide 4 access hatches each for each Membrane Train. Coordinate pipe support attachments and penetrations as shown in the Drawings.

1.2 RELATED SECTIONS

A. Drawings and General Provisions of the Contract, including General Supplementary Conditions apply to this Section.

B. Section 01300, Submittals.

C. Section 01640, Materials and Equipment.

D. Section 01650, Starting of Systems.

E. Section 09900, Painting.

F. Division 13, Special Construction.

G. Division 15, Mechanical.

H. Division 16, Electrical.

1.3 REFERENCES

A. Aluminum Association Specifications for Aluminum Structures.

B. Aluminum Association Aluminum Design Manual, Specification, and Guidelines for Aluminum Structures.

C. ASCE 8-90, Specification for the Design of Cold-Formed Stainless Steel Structural Members.

D. ASTM C864-90, Standard Specifications for Performed Gasket and Sealing Material.

E. ASTM F593, Standard Specification for Stainless Steel Bolts, Hex Cap Screws, and Studs.

1.4 SUBMITTALS

A. Drawings describing the completed structure and all its components shall be submitted, complete with materials of construction and typical details. Drawings shall be sealed and signed by a qualified Professional Engineer registered in the State of Arizona.

B. Records certifying the satisfactory inspection of all structural welds of aluminum components shall be submitted prior to delivery of all fabricated materials.

C. Design calculations verifying conformance to deflection limits shall be submitted. Deflection calculations are required for structural members as well as walking surfaces.

D. Descriptive and Operation and Maintenance Data submittals shall be made in accordance with the Data Reference Symbols defined in Section 01300, Submittals.
   1. Covers: Shop Drawings and O&M Manuals:
      a. Letters of Certification of Compliance on materials, equipment, etc.
      b. Final Certified Drawings showing outline dimensions, foundation layout or mounting information, and other pertinent dimensions.
      c. Field erection instructions, assembly drawings and/or diagrams, detailed reference drawing lists, lists of erection details, and list of spare parts supplied with equipment.

d. Shop Detail Drawings showing individual sub- assemblies and fabricated pieces with material specifications and other applicable data.
e. General bulletins and catalog cuts describing complete apparatus, including operating principles and fundamentals.
f. Materials of construction of all components.

E. All equipment manufactures shall submit evidence of conformance with the Specifications as required by the individual Specifications Sections. Naming of a manufacturer in the Specifications is not an indication that the manufacturer's proposed or standard equipment is acceptable in lieu of the specified components and features. Naming is only an indication that the manufacturer may have the capability of engineering and supplying a system as specified.

F. Before executing any of the Work in this Section prints or Drawings shall be submitted to the ENGINEER showing dimensions, sizes, thickness, gauges, materials, finishes, joint attachments, erection procedure, and thermal expansion allowances.

G. A complete set of design calculations for the covers shall be submitted. These calculations shall be signed by a Registered Professional Engineer. All Work shall be fabricated and erected in accordance with the approved Drawings.

H. Certification that the specified material alloys, sizes, and quantities have been furnished shall be submitted upon completion of the Project.

I. Unit responsibility form not required for extruded flat panel covers.

J. Shop Drawings: Submit for approval the following:
1. Include the following:
a. Dimensions, sizes, thicknesses, gauges, materials, finishes.
b. Attachment and erection procedures.
c. Number and location of penetrations.
d. Penetration details.
e. Access hatch locations.
f. Special details not specifically indicated on the Drawings.
2. A copy of this specification section, with addendum updates included, and all referenced and applicable sections, with addendum updates included, with each paragraph check-marked to indicate specification compliance or marked to indicate requested deviations from specification requirements. Check marks (✓) shall denote full compliance with a paragraph as a whole. If deviations from the specifications are indicated, and therefore requested by the CONTRACTOR, each deviation shall be underlined and denoted by a number in the margin to the right of the identified paragraph, referenced to a detailed written explanation of the reasons for requesting the deviation. The ENGINEER shall be the final authority for determining acceptability of requested deviations. The CONTRACTOR shall furnish equipment and/or services as specified if an exception and/or deviation is rejected. The

remaining portions of the paragraph not underlined will signify compliance on the part of the CONTRACTOR with the specifications. Failure to include a copy of the marked-up specification sections, along with justification(s) for any requested deviations to the specification requirements, with the submittal shall be sufficient cause for rejection of the entire submittal with no further consideration.

The CONTRACTOR shall submit the preventive maintenance information package as part of the shop drawing submittal package to the ENGINEER for review and approval. **SHOP DRAWING SUBMITTAL PACKAGE WILL NOT BE APPROVED WITHOUT ACCEPTANCE OF PREVENTIVE MAINTENANCE INFORMATION.**

PART 2 - PRODUCTS

2.1 DESCRIPTION

A. The flat cover shall be clear-span and self-supporting from the peripheral structure. The aluminum cover shall be composed of panels and beams. All panels shall interlock with the adjoining beam and panels without the use of threaded fasteners. Uplift of each panel will be resisted with the use of an integral latch system. The use of structural members in contact with the contents of the basin is expressly prohibited. The flat cover shall consist of removable panels each weighing no more than 275 pounds, and other covers not to exceed 150 pounds, unless otherwise indicated on Drawings. The required lifting force per panel shall not exceed the dead weight of the panel. Each panel must be able to be removed without needing to remove more than the two adjacent panels. The need for removing flashing or "hold-down" extrusions longer than the width of the panel is prohibited. The flat cover shall have an integral aggressively non-skid surface. Raised surfaces without the use of texturing to achieve slip resistant is not acceptable. The use of checkered plate, paint, tape, sandblasting, or other applied systems to achieve the slip resistant surface is expressly prohibited.

B. The design shall prevent water pooling which may result in over-stressing the flat cover.

C. Cover manufacturer shall provide access hatches, gravity vents, and pipe penetrations as shown on the Drawings.

D. The removable closure panels shall be attached continuously along their edges to the structural members using an interlocking joint. Elastomeric weather seal gasket shall form a substantially airtight seal along the panel edges. The gaskets shall be fully enclosed to prevent ultraviolet exposure.

E. Access to any location under the cover shall be gained through integral gear hinged access hatches. The Access Hatch Panels shall have the identical properties as the rest of the aluminum cover including loads, deflection and slip

resistance specifications. The hinged access panels shall be the full panel width. The length of the access panel shall be clearly indicated on drawings. Hinged panel components including hinges, decking and lifting handles shall be extruded 6061-T6. While in the closed position the hatches will be completely flush therefore posing no tripping hazard. In the open position the panel shall lie flat on the cover and will not need a hold open device.

F. The cover system shall be mounted on aluminum angle attached to the inside face of the concrete to match existing aluminum cover systems in appearance and functionality. No portion of the cover system shall be mounted to the top surface of the concrete wall. The aluminum angle shall be mounted at an elevation that provides a zero transition between the cover system and the top of concrete.

2.2 MATERIALS

A. The following is a summary of approved materials and/or material specifications. All aluminum alloys shall be defined by the Aluminum Association and published in the Aluminum Standards and Data:
   1. Bolts and Fasteners: All bolts and fasteners shall be 316 stainless steel.
   2. Structural Shapes: Aluminum structural shapes shall be alloy 6061-T6, 6005A-T6, or 6063-T6 minimum 0.10 inch thick. Load supporting surfaces shall be of sufficient thickness to meet or exceed all loading requirements specified in this Section.
   3. Aluminum extrusions: 6061-T6 alloy, mill-finished.
   4. Closure-flashing-to-panel seals: 3/8-inch Hypalon, Santoprene, or Neoprene gaskets.
   5. Closure flashing anchors and hardware: Type 316 stainless steel, 3/8-inch diameter.
   6. Access hatch door and frame materials: Same as for cover panels.
   7. Access hatch hinges, handles, prop rods, and latches: Aluminum.
   8. Handrail: Removable, aluminum, able to prevent accidental entry into hatch opening.
   9. Miscellaneous Shapes: Miscellaneous aluminum shapes shall be alloy 6061-T6, 6005A-T6, or 6063-T6.
   10. Gaskets: All gaskets shall be Neoprene conforming to ASTM C864-90, resistant to ozone and shielded from exposure to ultraviolet light.
   11. Sealant: All sealants shall be resistant to ozone and ultraviolet light and conform with Federal Specification TT-S-00230C.
   12. Anchors shall be epoxy-type. Expansion-type anchors are not permitted.
   13. Nameplates, manufacturer's name, or other identifications: Maximum 6 inches by 6 inches in size.
   14. Cover configuration: Free-standing, flat, 1-piece, interlocking, supported at each end only, without intermediate supports, removable, arranged as indicated on the Drawings, with flat, planar surface exposed and welded reinforcing ribs and stiffeners facing downward toward water surface.

15. Covers components: Standard and specially reinforced panels, able to safely sustain specified loads without permanent deformation or evidence of failure.
16. Joints between panels: Horizontal tongue and groove type.
17. Access hatches:
    a. 1. Reinforcement: Aluminum structural members able to prevent bowing, warping, or other distortions.
    b. Doors: Able to be lifted and locked open by 1 person.
    c. Mounting: Curb mounted and flashed.
    d. Curbs: Minimum 3/16-inch thick with welded corners.
    e. Door seal: Gasket against curb.
18. Penetration reinforcement: Minimum 1/4-inch thick aluminum stiffeners, able to prevent bowing, sagging, warping, or other distortions.
19. Penetration flashing and sealant: Manufacturer's standard, able to prevent intrusion of air and allow for removal of covers with minimum disassembly of equipment, piping, or duct.
20. Pressure and vacuum relief: No additional measures required. Pressure and vacuum relief is provided by gravity ventilators and goose-neck vents, downstream of membrane trains, with the air space between membrane trains.
21. Panel top surface: Non-slip, manufactured as part of panels or applied to surfaces

2.3 EXPERIENCE

A. No equipment shall be supplied by any manufacturer not regularly engaged in the manufacturing and production of flat covers in the size and character herein specified. The manufacturer must have designed, manufactured and installed at least one roof of the same type and of similar size as units specified herein. This roof must be in satisfactory use for a period not less than five years.

2.4 DESIGN LOADS

A. The entire flat cover shall be designed to sustain the loads specified herein, within the stress limitations of the Aluminum Association Specifications for Aluminum Structures.

B. The load cases to be considered shall be those described below, unless more severe loads are specified by the purchaser.
    1. Dead Load: The dead load shall be defined as the weight of the structure and all material permanently attached to and supported by the structure.
    2. Live Load: 40 pounds per square foot live load plus dead load.
    3. Wind Load: The wind load shall be obtained by ASCE 7-98.
    4. Resistance to wind uplift.
    5. Vacuum/Pressure Load: 1-inch water column vacuum.
    6. Panel Design Load: In addition to the above mentioned loads, the aluminum panels shall be designed for a concentrated single load of 500 pounds on any

single panel area equal to 4 square feet. These loads are to be taken as acting separately from one another and not simultaneously with the other design loads.

7. MBR Basin cover design as indicated on the drawings is as follows:
    a. Dead load.
    b. 2. Live load.
        1) Live load case 1: 100 psf downward.
        2) Live load case 2: 65 psf upward due to seismic sloshing.
        3) Load case 3: 40 psf downward over entire cover plus 700 pound downward concentrated load over a 1-foot square area.
    c. Unbalanced live load: Live loads patterned in a way to create maximum shear, moments, and deflections.
8. Membrane cassette load: Aluminum cover panel designed to support loading from one fully wet weight of GE/Zenon 500D membrane cassette, 4 point loads at 2500 pounds each.
9. Load Combinations: The loads described above shall be applied to the flat cover in the following combinations:
    a. Dead load + live load case 1 + vacuum load.
    b. Dead load + live load case 2.
    c. Dead load + live load case 3 + vacuum load.
    d. Dead load + unbalanced live load + vacuum load.
    e. Dead load + membrane cassette load.
10. Deflections: For the above loads and load combinations, the deflection of all components (structural and cladding) shall not exceed L/240 with L equal to the short span of the component. This deflection limit applies not only to the flat cover as a whole, but also to the skin of the cover spanning between the supporting edges of each panel or module. Calculations stamped by a Registered Professional Engineer shall be provided at the time of submittal to ensure that this requirement has been met.
11. Temperature: The load combinations listed above shall be considered for a temperature change of 100° F below the installation temperature and 100° F above the installation temperature and for a material temperature range of 40° F below zero to 160° F above zero.
12. Seismic criteria:
    a. American Society of Civil Engineers (ASCE):
        1) 7-10 - Minimum Design Loads for Buildings and Other Structures.
13. Wind load:
    a. International Code Council (ICC)
    b. American Society of Civil Engineers (ASCE)
        1) 7-10 - Minimum Design Loads for Buildings and Other Structures.

2.5 CONNECTIONS

A. In no case shall a joint be designed to sustain a greater total resultant shear force than that which would be allowed by summing the allowable shear force of the individual fasteners, based on their net cross-section areas through the shear plane

and the allowable shear stress of the material. The use of manufacturers' test data to rationalize an increase in assumed fastener strengths is prohibited. In no case shall values greater than those published by the Aluminum Association and ASTM F593 for aluminum and stainless steel fasteners, respectively, be used. The allowable stresses are as follows:

Fastener Material	Allowable Shear Stress
Series 316 Stainless Steel	20% of Minimum Tensile Strength as published in ASTM F593
6061-T6 Aluminum	11 ksi
7075-T73 Aluminum	18 ksi

2.6 MANUFACTURERS

A. Acceptable Manufacturer:
   1. CST covers
   2. Or approved equal.

PART 3 - EXECUTION

3.1 INSTALLATION

A. All Work shall be executed by skilled mechanics with a supervisor experience in the erection of flat covers. The flat cover shall be erected plumb and level and in proper alignment.

B. Field refabrication of structural components or panels will not be accepted. Forcing of the structure to achieve fit-up during construction is expressly forbidden and not acceptable.

C. All sealant joints shall be tooled slightly concave after sealant is installed. Care shall be taken to keep sealant confined to joint area, and any outside of the joint shall be moved so that the panels will be free from misplaced sealant. All gasket materials shall be continuous; splices will not be allowed between right angles.

3.2 WARRANTY

A. The flat cover manufacturer shall warrant that the work described herein shall be free from defects (workmanship and material). The flat cover manufacturer shall replace or repair only faulty workmanship or defective material furnished by it that is reported to it within one year from the date of completion of this scope of Work.

++ END OF SECTION ++

CITY OF CHANDLER, ARIZONA
RECLAIMED WATER INTERCONNECT FACILTY
PROJECT NO. W1901.203

MAYOR
KEVIN HARTKE

VICE MAYOR
MARK STEWART

COUNCIL
CHRISTINE ELLIS
OD HARRIS
RENÉ LOPEZ
MATT ORLANDO
TERRY ROE

CITY OF CHANDLER
TRANSPORTATION &
DEVELOPMENT DEPARTMENT
215 EAST BUFFALO STREET
CHANDLER, AZ 85225
PHONE NO. (480) 782 - 3000

AGENCY REVIEW
FEBRUARY 2022
VOLUME 3 OF 3

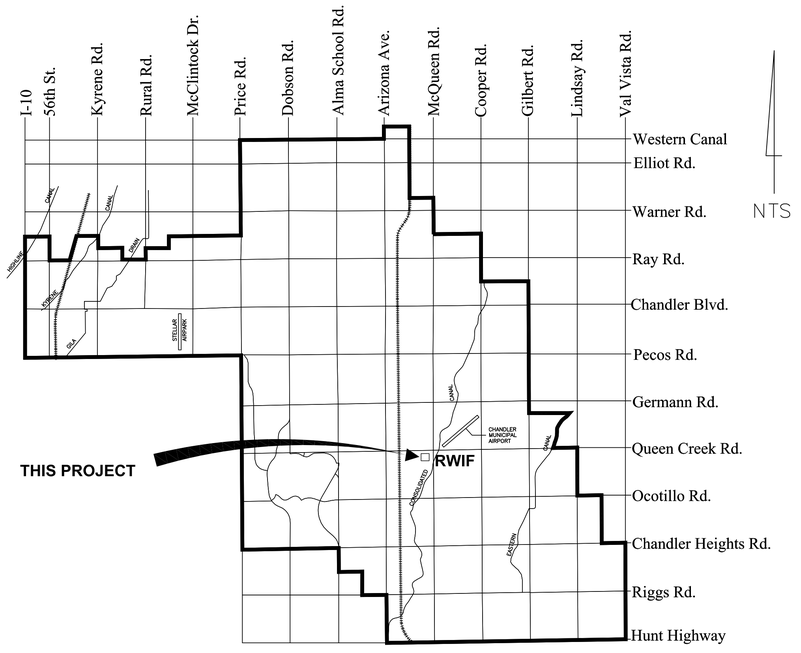

VICINITY MAP

LEGAL DESCRIPTION:

AWRF
APN: 303-41-008C
TOWNSHIP 2S, RANGE 5E, SECTION 15 OF THE GILA AND SALT RIVER BASELINE AND MERIDIAN, MARICOPA COUNTY, ARIZONA.
AWRF ELEVATIONS BASED ON NGVD29 DATUM

BENCHMARK NUMBER	NGVD 29 ELEVATION	DESCRIPTION	EQUATION	NAVD 88 ELEVATION
AWRF 43A	1213.88	3" BRASS CAP IN CONCRETE, ON ROAD SIDE BY SRP STRUCTURE	+1.693'	1215.57

DATE: FEBRUARY 2022
STATUS: AGENCY REVIEW

REV. NO.	DATE	DRWN	CHKD	REMARKS

30185 UDAY K. GANDHE — Professional Engineer Certificate — Not Signed 12/31/2022 — Arizona U.S.A.

41008 SREERAM RENGARAJ — Professional Engineer Certificate — Not Signed 12/31/2022 — Arizona U.S.A.

WILSON ENGINEERS
1620 W. FOUNTAINHEAD PKWY,
SUITE 501
TEMPE, ARIZONA 85282
PHONE: (480) 893-8860

APPROVED:

TRANSPORTATION & DEVELOPMENT — DATE

CITY ENGINEER — DATE

DEVELOPMENT SERVICES ENGINEER — DATE

MARICOPA COUNTY ENVIRONMENTAL SERVICE DEPARTMENT — DATE

GRADE CERTIFICATION:

THIS IS TO CERTIFY THAT THIS GRADING PLAN IS IN COMPLIANCE WITH THE GRADE REQUIREMENTS OF THE SOILS REPORT PREPARED BY:

DATE

REGISTERED CIVIL ENGINEER — DATE

FINISHED GRADE CERTIFICATION:

THIS IS TO CERTIFY THAT THE FINISH GRADES SHOWN OR AS-BUILT ON THIS GRADING PLAN ARE IN COMPLIANCE WITH THE SOILS REPORT PREPARED BY:

DATE

REGISTERED CIVIL ENGINEER (OR REGISTERED LAND SURVEYOR) — DATE

AS-BUILT CERTIFICATION:

I HEREBY CERTIFY THAT THE "AS-BUILT" INFORMATION AS SHOWN HEREON WAS MADE UNDER MY SUPERVISION, OR AS NOTED, AND IS CORRECT TO THE BEST OF MY KNOWLEDGE AND BELIEF.

REGISTERED LAND SURVEYOR FIRM NAME — REGISTRATION NO: — DATE

I HEREBY CERTIFY THAT THE "AS-BUILT" INFORMATION SHOWN HEREON SATISFIES THE INTENT OF THE DESIGN.

REGISTERED CIVIL ENGINEER FIRM NAME — REGISTRATION NO: — DATE

C.O.C. LOG NO. EONXX-XXXX

PROJECT NAME: RECLAIMED WATER INTERCONNECT FACILITY PROJECT NO. W.1901.203

GENERAL

G-1	COVER SHEET
G-2	SHEET INDEX
G-4	GENERAL NOTES - 1
G-5	GENERAL NOTES - 2
G-6	PROCESS AND SITE LEGEND
G-9	RWIF HYDRAULIC PROFILE
G-10	RWIF PROCESS SCHEMATIC

DEMOLITION

D-1.00	AWRF OVERALL DEMOLITION PLAN
D-1.01	AWRF PARTIAL DEMOLITION PLAN - 1
D-1.02	AWRF PARTIAL DEMOLITION PLAN - 2
D-1.03	AWRF PARTIAL DEMOLITION PLAN - 3

CIVIL

C-1.0	AWRF SURVEY CONTROL SHEET
C-1.01	RWIF OVERALL SITE PLAN
C-1.02	RWIF PARTIAL SITE PLAN - 1
C-1.03	RWIF PARTIAL SITE PLAN - 2
C-1.04	RWIF PARTIAL SITE PLAN - 3
C-1.05	RWIF PARTIAL SITE PLAN - 4
C-1.21	RWIF OVERALL YARD PIPING PLAN
C-1.22	RWIF PARTIAL YARD PIPING PLAN - 1
C-1.23	RWIF PARTIAL YARD PIPING PLAN - 2
C-1.24	RWIF PARTIAL YARD PIPING PLAN - 3
C-1.25	RWIF PARTIAL YARD PIPING PLAN - 4
C-1.41	RWIF GRADING AND DRAINAGE OVERALL SITE PLAN
C-1.42	RWIF GRADING AND DRAINAGE SITE PLAN - 1
C-1.43	RWIF GRADING AND DRAINAGE SITE PLAN - 2
C-1.44	RWIF GRADING AND DRAINAGE SITE PLAN - 3
C-1.91	RWIF - YARD PIPING PROFILES - 1
C-1.92	RWIF - YARD PIPING PROFILES - 2
C-7.01	CIVIL DETAILS - 1
C-7.02	CIVIL DETAILS - 2
C-7.03	CIVIL DETAILS - 3

MECHANICAL

M-1.01	RAW WATER PUMP STATION RENDERING - 1
M-1.02	RAW WATER PUMP STATION RENDERING - 2
M-1.03	RAW WATER PUMP STATION UPPER PLAN VIEW
M-1.04	RAW WATER PUMP STATION PLAN, SECTION, AND DETAILS
M-1.05	RAW WATER PUMP STATION SECTION AND DETAILS 2
M-1.21	SELF-CLEANING STRAINERS RENDERING - 1
M-1.22	SELF-CLEANING STRAINERS RENDERING - 2
M-1.23	SELF-CLEANING STRAINERS OVERALL PLAN
M-1.24	SELF-CLEANING STRAINERS SECTION AND DETAILS - 1
M-1.25	SELF-CLEANING STRAINERS SECTION AND DETAILS - 2
M-1.41	MEMBRANE FACILITY OVERALL PLAN RENDERING
M-1.42	MEMBRANE FACILITY RENDERING - 2
M-1.43	MEMBRANE FACILITY OVERALL PLAN
M-1.44	MEMBRANE FACILITY LOWER PLAN
M-1.45	MEMBRANE FACILITY SECTION AND DETAILS - 1
M-1.46	MEMBRANE FACILITY SECTION AND DETAILS - 2
M-1.47	MEMBRANE FACILITY SECTION AND DETAILS - 3
M-1.48	MEMBRANE FACILITY SECTION AND DETAILS - 4
M-1.49	MEMBRANE FACILITY BACKPULSE TANK ORIENTATION PLAN AND DETAILS
M-1.50	MEMBRANE FACILITY BACKPULSE TANK DETAILS
M-1.51	MEMBRANE FACILITY SECTION AND DETAILS - 5
M-1.61	AWRF MODIFIED CHLORINE CONTACT BASIN - PLAN AND SECTION
M-1.81	RWIF BLOWER BUILDING RENDERING
M-1.82	RWIF BLOWER BUILDING OVERALL PLAN
M-1.83	RWIF BLOWER BUILDING SECTION AND DETAILS - 1
M-1.84	RWIF BLOWER BUILDING SECTION AND DETAILS - 2
M-2.00	MFS CHEMICAL FACILITY RENDERING 1
M-2.01	MFS CHEMICAL FACILITY RENDERING 2
M-2.02	MFS CHEMICAL FACILITY FLOW SCHEMATIC 1
M-2.03	MFS CHEMICAL FACILITY FLOW SCHEMATIC 2
M-2.04	MFS - SODIUM HYPOCHLORITE FACILITY OVERALL PLAN
M-2.05	MFS - SODIUM HYPOCHLORITE FACILITY SECTION AND DETAILS
M-2.06	MFS - SODIUM HYPOCHLORITE TANK ORIENTATION PLAN AND DETAILS
M-2.07	MFS - SODIUM HYPOCHLORITE TANK DETAILS
M-2.10	MFS - CIP CHEMICALS FACILITY OVERALL PLAN
M-2.11	MFS - CIP CHEMICALS FACILITY SECTIONS 1
M-2.12	MFS - CIP CHEMICALS FACILITY SECTIONS 2
M-2.16	MFS - SELF CONTAINED TOTE STORAGE AREA SECTION
M-2.21	ACH FACILITY RENDERING
M-2.22	ACH FACILITY FLOW SCHEMATIC
M-2.23	ACH FACILITY OVERALL PLAN
M-2.24	ACH FACILITY SECTIONS
M-2.31	MODIFIED BULK SODIUM HYPOCHLORITE FACILITY PLAN AND SECTION
M-7.01	TYPICAL DETAILS - 1
M-7.02	TYPICAL DETAILS - 2
M-7.03	TYPICAL DETAILS - 3
M-7.04	TYPICAL DETAILS - 4
M-7.05	TYPICAL DETAILS - 5
M-7.06	TYPICAL DETAILS - 6
M-7.07	TYPICAL DETAILS - 7

STRUCTURAL

S-1	GENERAL STRUCTURAL NOTES 1
S-2	GENERAL STRUCTURAL NOTES 2
S-3	GENERAL STRUCTURAL NOTES 3
S-4	GENERAL STRUCTURAL NOTES 4
S-5	GENERAL STRUCTURAL NOTES 5
S-6	ABBREVIATIONS
S-10	TYPICAL DETAILS 1
S-11	TYPICAL DETAILS 2
S-12	TYPICAL DETAILS 3
S-13	TYPICAL DETAILS 4
S-14	TYPICAL DETAILS 5
S-15	TYPICAL DETAILS 6
S-16	TYPICAL DETAILS 7
S-1.01	RAW WATER PUMP STATION OVERALL PLAN
S-1.02	RAW WATER PUMP STATION UPPER AND LOWER PLANS
S-1.03	RAW WATER PUMP STATION EQUIPMENT PADS AND FRAMING PLANS
S-1.04	RAW WATER PUMP STATION SECTION AND DETAILS 1
S-1.05	RAW WATER PUMP STATION SECTION AND DETAILS 2
S-1.06	RAW WATER PUMP STATION SECTION AND DETAILS 3
S-1.20	MEMBRANE FACILITY AND SELF-CLEANING STRAINERS OVERALL PLAN
S-1.21	SELF-CLEANING STRAINERS LOWER PLAN
S-1.22	SELF-CLEANING STRAINERS CANOPY PLAN
S-1.41	MEMBRANE FACILITY LOWER PLAN
S-1.42	MEMBRANE FACILITY UPPER PLAN
S-1.43	MEMBRANE FACILITY CANOPY PLAN
S-1.44	SELF-CLEANING STRAINERS SECTION AND DETAILS 1
S-1.45	MEMBRANE FACILITY LOWER ENLARGED PLANS
S-1.46	MEMBRANE FACILITY UPPER ENLARGED PLANS
S-1.47	MEMBRANE FACILITY SECTIONS AND DETAILS 1

STRUCTURAL (CONTINUED)

S-1.48	MEMBRANE FACILITY SECTIONS AND DETAILS 2
S-1.49	MEMBRANE FACILITY SECTIONS AND DETAILS 3
S-1.50	MEMBRANE FACILITY SECTIONS AND DETAILS 4
S-1.51	MEMBRANE FACILITY SECTIONS AND DETAILS 5
S-1.52	MEMBRANE FACILITY SECTIONS AND DETAILS 6
S-1.61	CHLORINE CONTACT BASIN UPPER PLAN
S-1.62	CHLORINE CONTACT BASIN SECTIONS AND DETAILS 1
S-1.81	RWIF BLOWER BUILDING FOUNDATION PLAN
S-1.91	RWIF ELECTRICAL BUILDING FOUNDATION PLAN
S-2.00	MFS CHEMICAL STORAGE FACILITY FOUNDATION PLAN
S-2.01	MFS CHEMICAL STORAGE FACILITY CANOPY PLAN
S-2.02	MFS CHEMICAL STORAGE FACILITY SECTIONS AND DETAILS 1
S-2.03	MFS CHEMICAL STORAGE FACILITY SECTIONS AND DETAILS 2
S-2.04	MFS CHEMICAL STORAGE FACILITY SECTIONS AND DETAILS 3
S-2.21	ACH STORAGE FACILITY OVERALL AND CANOPY PLAN
S-2.22	ACH STORAGE FACILITY SECTIONS AND DETAILS

ARCHITECTURAL

A-1.01	RWIF RAW WATER PUMP STATION MASONRY WALL PLAN VIEW
A-1.02	RWIF RAW WATER PUMP STATION MASONRY WALL ELEVATIONS
A-1.03	RWIF RAW WATER PUMP STATION GATE DETAILS
A-1.71	RWIF BLOWER BUILDING ARCHITECTURAL CODE SHEET
A-1.72	RWIF BLOWER BUILDING FLOOR PLAN AND REFLECTED CEILING PLAN
A-1.73	RWIF BLOWER BUILDING ROOF PLAN AND SECTIONS
A-1.74	RWIF BLOWER BUILDING ELEVATION
A-1.81	RWIF ELECTRICAL BUILDING PLAN VIEWS
A-1.82	RWIF ELECTRICAL BUILDING ELEVATIONS AND SECTIONS
A-1.83	RWIF BLOWER BUILDING SCHEDULES AND DETAILS.

HVAC

H-1.71	RWIF BLOWER BUILDING MECHANICAL SCHEDULES AND GENERAL NOTES
H-1.72	RWIF BLOWER BUILDING MECHANICAL HVAC FLOOR PLAN
H-1.73	RWIF BLOWER BUILDING MECHANICAL DETAILS
H-1.81	RWIF ELECTRICAL BUILDING MECHANICAL SCHEDULES AND GENERAL NOTES
H-1.82	RWIF ELECTRICAL BUILDING MECHANICAL HVAC FLOOR PLAN
H-1.83	RWIF ELECTRICAL BUILDING MECHANICAL DETAILS

ELECTRICAL

E-0.00	ELECTRICAL SYMBOLS AND LEGEND
E-0.01	LIGHTING FIXTURE SCHEDULE
E-1.01	OVERALL ELECTRICAL SITE PLAN
E-1.02	RWIF - PARTIAL SITE ELECTRICAL PLAN 1
E-1.03	RWIF - PARTIAL SITE ELECTRICAL PLAN 2
E-1.04	RWIF - PARTIAL SITE ELECTRICAL PLAN 3
E-1.05	RWIF - PARTIAL SITE ELECTRICAL PLAN 4
E-1.06	RWIF - PARTIAL SITE ELECTRICAL PLAN - DEMOLITION
E-2.01	EXISTING MCC-BL1 SINGLE LINE DIAGRAM MODIFICATIONS
E-2.02	EXISTING MCC-BL1 LOAD SUMMARY MODIFICATIONS
E-2.03	MCC-RWIF SINGLE LINE DIAGRAM
E-2.04	MCC-RWIF LOAD SUMMARIES AND PANEL SCHEDULES
E-2.05	LP-RWIF PANEL SCHEDULE
E-2.06	MCC-RWPS-1 SINGLE LINE DIAGRAM
E-2.07	SHORT CIRCUIT CURRENT LOCATIONS
E-3.01	EXISTING AERATION BLOWER ELECTRICAL ROOM ELECTRICAL PLAN - MODIFICATIONS
E-3.02	RWIF - ELECTRICAL BUILDING ELECTRICAL POWER PLAN
E-3.03	RWIF - ELECTRICAL BUILDING ELECTRICAL LIGHTING PLAN
E-3.04	RWIF - MEMBRANE FILTRATION SYSTEM ELECTRICAL POWER PLAN
E-3.05	RWIF - MEMBRANE FILTRATION SYSTEM KEYED NOTES
E-3.06	RWIF - MEMBRANE FILTRATION SYSTEM ELECTRICAL LIGHTING PLAN
E-3.07	RWIF - BLOWER BUILDING ELECTRICAL POWER PLAN
E-3.08	RWIF - BLOWER BUILDING ELECTRICAL LIGHTING PLAN
E-3.09	RWIF - MFS CHEMICAL FEED FACILITY ELECTRICAL POWER PLAN
E-3.10	RWIF - MFS CHEMICAL FEED FACILITY KEYED NOTES
E-3.11	RWIF - MFS CHEMICAL FEED FACILITY ELECTRICAL LIGHTING PLAN
E-3.12	AWRF CHLORINE CONTACT BASIN ELECTRICAL PLAN - MODIFICATIONS
E-3.13	BULK SODIUM HYPOCHLORITE FACILITY ELECTRICAL PLAN - MODIFICATIONS
E-3.14	AWRF - ADMIN BLDG ELECTRICAL ROOM AND EFFLUENT PUMP STA CONTROL ROOM ELECTRICAL PLANS - MODIFICATIONS
E-3.15	SRP CANAL RAW WATER PUMP STATION ELECTRICAL POWER PLAN
E-3.16	SRP CANAL RAW WATER PUMP STATION ELECTRICAL LIGHTING PLAN
E-4.01	SMF AIR SCOUR BLOWER SCHEMATIC DIAGRAM
E-4.02	SMF PERMEATE PUMP SCHEMATIC DIAGRAM
E-4.03	SMF CIP PUMP SCHEMATIC DIAGRAM
E-4.04	SODIUM HYPOCHLORITE FILL STATION LCP-SHC-001 SCHEMATIC DIAGRAM
E-4.05	INLINE MIXER SCHEMATIC
E-4.06	RAW WATER PUMP SCHEMATIC DIAGRAM
E-4.07	RAW WATER STRAINER SCHEMATIC DIAGRAM
E-4.08	RAW WATER PUMP STATION LEVEL PANEL SCHEMATIC DIAGRAM
E-4.09	SMF LIGHTING CONTROL SCHEMATIC DIAGRAM
E-5.01	RWIF POWER CONDUIT BLOCK DIAGRAM 1
E-5.02	RWIF POWER CONDUIT BLOCK DIAGRAM 2
E-5.03	RWIF POWER CONDUIT BLOCK DIAGRAM 3
E-5.04	RWIF POWER CONDUIT BLOCK DIAGRAM 4
E-5.05	RWPS POWER CONDUIT BLOCK DIAGRAM
E-5.06	RWIF CONTROL CONDUIT BLOCK DIAGRAM 1
E-5.07	RWIF CONTROL CONDUIT BLOCK DIAGRAM 2
E-5.08	RWIF CONTROL CONDUIT BLOCK DIAGRAM 3
E-5.09	RWIF CONTROL CONDUIT BLOCK DIAGRAM 4
E-5.10	RWIF CONTROL CONDUIT BLOCK DIAGRAM 5
E-5.11	RWIF CONTROL CONDUIT BLOCK DIAGRAM 6
E-5.12	RWIF CONTROL CONDUIT BLOCK DIAGRAM 7
E-5.13	RWIF CONTROL CONDUIT BLOCK DIAGRAM 8
E-5.14	RWIF CONTROL CONDUIT BLOCK DIAGRAM 9
E-5.15	RWIF CONTROL CONDUIT BLOCK DIAGRAM 10
E-5.16	RWIF CONTROL CONDUIT BLOCK DIAGRAM 11
E-5.17	RWPS CONTROL CONDUIT BLOCK DIAGRAM
E-6.01	STANDARD ELECTRICAL DETAILS 1
E-6.02	STANDARD ELECTRICAL DETAILS 2
E-6.03	STANDARD ELECTRICAL DETAILS 3
E-6.04	STANDARD ELECTRICAL DETAILS 4

INSTRUMENTATION

I-0.00	INSTRUMENT STANDARD SYMBOLS AND LEGENDS
I-1.00	ETHERNET COMMUNICATION ARCHITECTURE
I-1.01	RAW WATER PUMP STATION P&ID
I-1.02	RAW WATER PUMP STATION MISCELLANEOUS P&ID
I-1.03	SELF-CLEANING STRAINERS P&ID
I-1.04	MEMBRANE FILTRATION SYSTEM TRAIN NO. 1 P&ID
I-1.05	MEMBRANE FILTRATION SYSTEM TRAIN NO. 2 P&ID
I-1.06	MEMBRANE FILTRATION SYSTEM TRAIN NO. 3 P&ID
I-1.07	MEMBRANE FILTRATION SYSTEM TRAIN NO. 4 P&ID
I-1.08	MEMBRANE FILTRATION SYSTEM PERMEATE PUMP NO. 1 P&ID
I-1.09	MEMBRANE FILTRATION SYSTEM PERMEATE PUMP NO. 2 P&ID
I-1.10	MEMBRANE FILTRATION SYSTEM PERMEATE PUMP NO. 3 P&ID
I-1.11	MEMBRANE FILTRATION SYSTEM PERMEATE PUMP NO. 4 P&ID
I-1.12	MEMBRANE FILTRATION SYSTEM BACKPULSE TANK P&ID
I-1.13	MEMBRANE FILTRATION SYSTEM CIP TANK P&ID
I-1.14	MEMBRANE FILTRATION SYSTEM CIP PUMPS P&ID

INSTRUMENTATION (CONTINUED)

I-1.15	MEMBRANE FILTRATION SYSTEM CIP SYSTEM P&ID
I-1.16	PERMEATE TURBIDIMETER W/COLUMN P&ID
I-1.17	MEMBRANE FILTRATION SYSTEM INLINE MIXER P&ID
I-1.18	CHLORINE CONTACT BASIN P&ID
I-1.19	MEMBRANE FILTRATION SYSTEM AIR SCOUR BLOWERS P&ID
I-1.20	MEMBRANE FILTRATION SYSTEM AIR COMPRESSORS P&ID
I-1.21	RECLAIMED WATER INTERCONNECT FACILITY MISCELLANEOUS P&ID
I-2.01	MFS CHEMICAL FACILITY SODIUM HYPOCHLORITE SYSTEM P&ID
I-2.02	MFS CHEMICAL FACILITY SODIUM HYPOCHLORITE METERING PUMPS P&ID
I-2.03	MFS CHEMICAL FACILITY CITRIC ACID FEED SYSTEM P&ID
I-2.04	MFS CHEMICAL FACILITY SULFURIC ACID FEED SYSTEM P&ID
I-2.05	MFS CHEMICAL FACILITY SODIUM BISULFITE FEED SYSTEM P&ID
I-2.06	MFS CHEMICAL FACILITY SODIUM HYDROXIDE FEED SYSTEM P&ID
I-2.07	ACH FACILITY ACH FEED SYSTEM P&ID
I-2.08	MODIFIED BULK SODIUM HYPOCHLORITE FACILITY P&ID 1 OF 2
I-2.09	MODIFIED BULK SODIUM HYPOCHLORITE FACILITY P&ID 2 OF 2

WILSON ENGINEERS
1620 West Fountainhead Pkwy
Suite 501
Tempe, Arizona 85282
Phone: (480) 893-8860
Improving Arizona's Infrastructure Since 1942

CITY OF CHANDLER
RECLAIMED WATER INTERCONNECT FACILITY

SHEET INDEX

CITY PROJECT NO. WW1901.203
WILSON PROJECT NO. 21007

Design: SZ | Drawn: JMJ | Checked: SR
Date: 02/2022 | Wilson Project No.: 21007

Rev#	Date	Description	By

VERIFY SCALES
BAR IS ONE INCH ON ORIGINAL DRAWING
0 1"
IF NOT ONE INCH ON THIS SHEET, ADJUST SCALES ACCORDINGLY

Registered Professional Engineer (Civil) — CERTIFICATE NO. 30185 UDAY K. GANDHE — Date Signed 02/28/2022 — ARIZONA U. S. A.

Registered Professional Engineer (Civil) — CERTIFICATE NO. 41008 SREERAM RENGARAJ — Date Signed 02/28/2022 — ARIZONA U. S. A.

Sheet No. **G-2**

XREFS: TB-WE-D; SEAL-UKG; SEAL-SR

G:\PROJECT\21007\CADD\DESIGN\GENERAL\21007G2.DWG, 2/28/2022 4:46:09 PM, klcasey, 1:2.1887

AGENCY REVIEW

GENERAL NOTES:

1. ALL CONSTRUCTION SHALL BE IN ACCORDANCE WITH THE MOST CURRENT ADOPTED MAG SPECIFICATIONS AND STANDARD DETAILS AS SUPPLEMENTED BY THE CITY OF CHANDLER.

2. THE CONTRACTOR SHALL OBTAIN ALL NECESSARY PERMITS PRIOR TO CONSTRUCTION.

3. THE DEVELOPMENT ENGINEER'S OFFICE SHALL BE NOTIFIED 24 HOURS PRIOR TO STARTING EACH PHASE OF CONSTRUCTION (480-782-3320).

4. PROJECT ELEVATIONS ARE BASED UPON NGVD 29 DATUM FOR AWRF. THE FOLLOWING BENCHMARKS WERE UTILIZED:

BENCHMARK NUMBER	NGVD 29 ELEVATION	DESCRIPTION	EQUATION	NAVD 88 ELEVATION
AWRF 43A	1213.88	3" BRASS CAP IN CONCRETE, ON ROAD SIDE BY SRP STRUCTURE	+1.693'	1215.57

5. PRIOR TO ANY CONSTRUCTION IN THE PUBLIC RIGHT-OF-WAY, THE CONTRACTOR/DEVELOPER SHALL NOTIFY THE LANDSCAPE COMPLIANCE COORDINATOR AT 480-782-3428. ANY CONSTRUCTION WITHIN THE PUBLIC RIGHT-OF-WAY SHALL BE RESTORED TO ORIGINAL CONDITIONS USING THE FOLLOWING REQUIREMENTS:

   A. ALL TREES IMPACTED BY CONSTRUCTION SHALL BE REPLACED WITH THE SAME SIZE AND TYPE OF TREE AT A LOCATION DETERMINED BY THE CITY;

   B. ALL IRRIGATION SYSTEMS SHALL BE RESTORED TO FULLY FUNCTIONING STATUS. ANY IRRIGATION LOCATED BENEATH ASPHALT OR CONCRETE SHALL BE SLEEVED WITH SCHEDULE 40 PVC TWO NOMINAL SIZES LARGER;

   C. THE AREA OF CONSTRUCTION SHALL BE TREATED WITH PRE-EMERGENT HERBICIDE (I.E. SURFLAN);

   D. GRANITE OF A SIZE AND COLOR TO MATCH EXISTING SHALL BE SPREAD A MINIMUM OF TWO INCHES THICK;

   E. THE STREET DIVISION SHALL BE CONTACTED TO INSPECT ALL WORK BEFORE A CONDITIONAL ACCEPTANCE IS ISSUED;

   F. THE CONTRACTOR/DEVELOPER SHALL MAINTAIN THE AREA FOR NINETY DAYS AFTER CONDITIONAL ACCEPTANCE. AFTER 90 DAYS THE CITY SHALL BE CONTACTED FOR FINAL ACCEPTANCE AND ASSUMPTION OF MAINTENANCE.

6. ANY WORK PERFORMED BY THE CONTRACTOR:

   A. ANY WORK PERFORMED WITHOUT THE APPROVAL OF THE CITY ENGINEER AND/OR ALL WORK AND MATERIAL NOT IN CONFORMANCE WITH THE SPECIFICATIONS IS SUBJECT TO REMOVAL ABD REPLACEMENT AT THE CONTRACTOR'S EXPENSE;

   B. WHENEVER THE INSPECTOR FINDS ANY WORK BEING PERFORMED IN A DANGEROUS OR UNSAFE MANNER, OR CONTRARY TO THE PLANS OR SPECIFICATIONS, OR NOT MEETING THE INTENT OF THE PLANS OR SPECIFICATIONS, THE INSPECTOR WILL ISSUE A STOP WORK ORDER. UPON ISSUANCE OF A STOP WORK ORDER, THE CITED WORK SHALL IMMEDIATELY CEASE. THE STOP WORK ORDER SHALL STATE THE REASON FOR THE ORDER, AND THE CONDITIONS WHICH CITED WORK IS AUTHORIZED TO RESUME UPON WRITTEN ORDER TO RESUME WORK. WHERE AN EMERGENCY EXISTS, THE INSPECTOR SHALL NOT BE REQUIRED TO GIVE A WRITTEN NOTICE PRIOR TO STOPPING THE WORK. THE CONTRACTOR IS RESPONSIBLE FOR ALL COSTS AND DELAYS FOR THE WORK RELATED TO THE STOP WORK ORDER;

7. THE CONTRACTOR SHALL UNCOVER ALL EXISTING CITY UTILITY LINES BEING TIED INTO TO VERIFY THEIR TYPE, CONDITION, LOCATION, INVERT, SLOPE AND ANY OTHER INFORMATION NEEDED TO DETERMINE THAT THE UTILITY CONNECTION WILL FUNCTION AS DESIGNED. THE CONTRACTOR IS RESPONSIBLE FOR MAKING ANY REPAIRS NECESSARY TO THE LATERAL OR MAIN LINES OF THE CITY WATER, RECLAIMED WATER, SANITARY SEWER, AND/OR STORM DRAIN SYSTEM NECESSARY FOR THE CONNECTION TO FUNCTION AS DESIGNED. THE CONTRACTOR SHALL LOCATE OR HAVE LOCATED ALL EXISTING UNDERGROUND PRIVATE UTILITIES (ELECTRIC, TELEPHONE, PIPELINES, ETC.) AND STRUCTURES IN ADVANCE OF CONSTRUCTION AND SHALL ELIMINATE ALL CONFLICTS PRIOR TO START OF CONSTRUCTION. BLUE STAKE TELEPHONE (602) 263-1100.

8. THE CITY OF CHANDLER IS NOT RESPONSIBLE FOR LIABILITY INCURRED DUE TO DELAYS AND/OR DAMAGES TO UTILITIES IN CONJUNCTION WITH THIS CONSTRUCTION. THE CITY WILL NOT PARTICIPATE IN THE COST OF CONSTRUCTION OR UTILITY RELOCATION.

9. NO FINAL ACCEPTANCE SHALL BE ISSUED UNTIL 4 MIL PHOTO MYLAR REPRODUCIBLE "AS-BUILT" PLANS CERTIFIED AND SEALED BY A REGISTERED CIVIL ENGINEER, HAVE BEEN SUBMITTED AND ACCEPTED BY THE CITY ENGINEER.

10. APPLICATIONS FOR STREET CUT PERMITS MUST BE APPROVED BY THE CITY ENGINEER PRIOR TO APPROVAL OF IMPROVEMENT PLANS. ALL PAVEMENT REPLACEMENT SHALL BE IN ACCORDANCE WITH SECTION 336 AND AS MODIFIED BY CITY SUPPLEMENTS.

11. BACKFILLING SHALL NOT BE STARTED UNTIL LINES ARE APPROVED BY THE CITY ENGINEER. ALL BACKFILL SHALL BE HALF-SACK CLSM UNLESS OTHERWISE APPROVED ON THE PLANS. ABC OR NATIVE MATERIAL SHALL BE INSTALLED IN ACCORDANCE WITH MAG SECTION 601, TYPE I. BACKFILL PLACEMENT AND SURFACE REPLACEMENT SHALL BE IN ACCORDANCE WITH MAG STD DTL 200 T-TOP.

12. CONSTRUCTION OF CONCRETE OR PAVING ITEMS SHALL NOT COMMENCE UNTIL ALL UNDERGROUND WORK HAS BEEN INSPECTED AND TESTED.

13. DISPOSAL OF AND STOCKPILING OF EXCESS MATERIAL WITHIN THE CHANDLER CITY LIMITS OR PLANNING AREA SHALL BE DONE IN SUCH A WAY THAT WILL NOT CREATE A NUISANCE. THE PLACING OF MATERIAL ON PRIVATE PROPERTY OF ANOTHER REQUIRES WRITTEN AUTHORIZATION. EARTHWORK STOCKPILES ARE NOT TO EXCEED 6 FEET IN HEIGHT. SLOPES ON ALL SIDES OF THE STOCKPILE SHALL NOT EXCEED A 1 TO 2 RATIO OF HEIGHT TO LENGTH. ANY EARTHWORK STOCKPILE, EVEN LESS THAN 6 FEET, MUST BE REMOVED WITHIN 7 DAYS OF CITY NOTIFICATION IF DUST SUPPRESSION EFFORTS FAIL TO MAINTAIN SATISFACTORY AIRBORNE CONTAMINANT CONTROL.

14. TRAFFIC CONTROL SHALL BE MAINTAINED IN ACCORDANCE WITH THE CHANDLER TRAFFIC BARRICADE MANUAL AND APPROVED TRAFFIC SEQUENCING PLANS AND/OR NOTES.

15. THE CONTRACTOR SHALL PROVIDE ADEQUATE MEANS FOR CLEANING TRUCKS AND/OR OTHER EQUIPMENT OF MUD PRIOR TO ENTERING PUBLIC STREETS, AND IT IS THE CONTRACTOR'S RESPONSIBILITY TO CLEAN STREETS, ALLAY DUST, AND TAKE WHATEVER MEASURES ARE NECESSARY TO INSURE THAT ALL ROADS ARE MAINTAINED IN A CLEAN, MUD AND DUST-FREE CONDITION AT ALL TIMES THE CONTRACTOR SHALL UTILIZE A PM10-CERTIFIED STREET SWEEPER FOR STREET CLEANING.

16. AN APPROVED SET OF PLANS SHALL BE MAINTAINED ON THE JOB SITE AT ALL TIMES THAT WORK IS IN PROGRESS. DEVIATION FROM THE PLANS SHALL NOT BE ALLOWED WITHOUT AN APPROVED PLAN REVISION.

17. A MINIMUM HORIZONTAL SEPARATION OF SIX (6) FEET IS REQUIRED BETWEEN SEWER SERVICES AND WATER OR FIRELINE SERVICES. A MINIMUM HORIZONTAL SEPARATION OF SIX (6) FEET IS REQUIRED BETWEEN RECLAIMED WATER SERVICES AND SEWER, WATER, OR FIRELINE SERVICES.

18. SETBACKS FOR UTILITY POLES, STRUCTURES, AND OTHER SIMILAR FACILITIES (NOT INCLUDING LANDSCAPING) GREATER THAN 18 INCHES IN HEIGHT SHALL BE 5.5 FEET FROM THE BACK OF CURB UNLESS APPROVED IN WRITING BY THE CITY ENGINEER. IN CASES WHERE THE FACILITIES ARE ADJACENT TO A DECELERATION LANE, BUS BAY, OR MEDIAN CURB, THE SETBACK CAN BE REDUCED TO 2.5 FEET FROM THE BACK OF CURB.

19. SCREEN WALL OVER 7', RETAINING WALLS OVER 4' MUST HAVE A BUILDING PERMIT AND BE IN CONFORMANCE WITH CHANDLER BUILDING CODE.

GENERAL NOTES (CONT):

20. ALL UNDERGROUND FACILITIES INSTALLED IN ANY REAL PROPERTY OUTSIDE THE CITY'S RIGHT-OF-WAY SHALL COMPLY WITH THE FOLLOWING MARKING STANDARDS IN ACCORDANCE WITH HOUSE BILL 2256. A YELLOW INSULATED COPPER WIRE OR OTHER APPROVED CONDUCTOR SHALL BE INSTALLED ADJACENT TO UNDERGROUND UTILITIES FOR FIRE LINE PIPING, POTABLE WATER DISTRIBUTION PIPING, SANITARY SEWER LINES, STORMWATER PIPING, RECLAIMED WATER PIPING, GRAVITY FLOW IRRIGATION PIPING AND PRESSURIZED IRRIGATION PIPING LARGER THAN TWO (2) INCHES IN DIAMETER UNLESS THESE FACILITIES CAN BE DETECTED FROM ABOVE GROUND WITH AN ELECTRONIC LOCATING DEVICE. ACCESS SHALL BE PROVIDED TO THE TRACER WIRE OR THE TRACER WIRE SHALL TERMINATE ABOVE GROUND AT EACH END OF THE PIPING. THE TRACER WIRE SHALL NOT BE LESS THAN 18 AWG AND THE INSULATION TYPE SHALL BE SUITABLE FOR DIRECT BURIAL.

21. ANY CONSTRUCTION DETOURS WILL REQUIRE AN ALL-WEATHER SURFACE PER MARICOPA COUNTY AIR QUALITY REQUIREMENTS.

22. THE CONTRACTOR SHALL SUPPLY PUBLIC WORKS INSPECTOR CONSTRUCTION MATERIAL TESTING DOCUMENTATION THROUGHOUT THE PROJECT.

23. ALL SITE IMPROVEMENTS, INCLUDING LANDSCAPE AND SITE CLEANUP, MUST BE COMPLETE PRIOR TO CERTIFICATE OF OCCUPANCY FOR ANY BUILDING WITHIN A PHASE

24. THE FOLLOWING UTILITY COMPANIES HAVE BEEN IDENTIFIED BY BLUE STAKE COORDINATION AND PROJECT PLANS HAVE BEEN SUBMITTED MOST RECENTLY AS NOTED:

UTILITIES WITHIN OR AFFECTED BY THE PROJECT	
UTILITY CONTACT	DATE SUBMITTED
AIR PRODUCTS & CHEMICALS	N/A
ARIZONA PUBLIC SERVICE	N/A
AT&T TELEPHONE LONG DISTANCE	N/A
COX CABLE	N/A
EL PASO NATURAL GAS	N/A
QWEST	N/A
ROOSEVELT WATER CONSERVATION DISTRICT (RWCD)	N/A
SALT RIVER PROJECT (POWER)	N/A
SALT RIVER PROJECT (SRVWUA)	N/A
KINDER MORGAN ENERGY PARTNERS	N/A
SOUTHWEST GAS	N/A
SPRINT TELEPHONE LONG DISTANCE	N/A

SEWER NOTES:

1. A MINIMUM HORIZONTAL SEPARATION OF SIX FEET IS REQUIRED BETWEEN SEWER MAINS AND SERVICES AND WATER, FIRELINE, AND RECLAIMED MAINS AND SERVICES. PROTECTION SHALL BE IN ACCORDANCE WITH MAG SECT 610.5.5 WITH THE EXCEPTION DUCTILE IRON PIPE IS NOT ALLOWED FOR SEWER CONSTRUCTION.

2. ALL SEWER TAPS SHALL BE WYE, WYE SADDLE, OR TEE.

3. CONNECTIONS TO EXISTING SEWER MAINS SHALL BE ACCOMPLISHED BY MACHINE TAPPING, UTILIZING A SADDLE, OR BY CONSTRUCTION OF A MANHOLE.

4. SEWER TAPS SHOULD HAVE 4-1/2 FEET COVER AT PROPERTY LINE. TO RAISE THE TAP FROM THE MAINS DEEPER THAN 6 FEET AND LESS THAN 12 FEET, THE WYE AND 1/8 BEND SHALL BE SET AT A 45 DEGREE ANGLE FROM HORIZONTAL AND A SHORT PIECE OF STRAIGHT PIPE SHALL BE PLACED ON THE 1/8 BEND. ANOTHER 1/8 BEND IS PLACED AT THE OTHER END OF THE SHORT PIPE TO BRING THE TAP TO APPROPRIATE GRADE AT THE PROPERTY LINE. FOR MAINS 12 FEET OR DEEPER, REFER TO C-410.

5. ALL SEWER SERVICE CONNECTIONS SHALL BE EXTENDED A SUFFICIENT DISTANCE BEYOND STREET RIGHT-OF-WAY LINES TO CLEAR ALL FACILITIES TO BE INSTALLED IN PUBLIC UTILITY EASEMENTS WHICH PARALLEL THE STREET RIGHT-OF-WAY. REFER TO MAG STD DTL 440, TYPE A, FOR ADDITIONAL REQUIREMENTS.

6. ALL SEWER PIPE SHALL BE CONSTRUCTED WITH BEDDING CONFORMING TO C-402. ALL SEWER LINES 10 FEET IN DEPTH AND GREATER SHALL BE VCP PIPE, OR AS SPECIFIED ON THESE PLANS. LOCATOR WIRE AND IDENTIFICATION TAPE SHALL BE INSTALLED IN ACCORDANCE WITH C-408.

7. PIPE BACKFILL SHALL BE 1/2 SACK CLSM IN ACCORDANCE WITH MAG SECTION 728, UNLESS OTHERWISE DETAILED AND APPROVED ON THESE PLANS. PAVEMENT REPLACEMENT SHALL BE IN ACCORDANCE WITH MAG STD DTL 200, T-TOP WITH A MINIMUM 16" DEPTH ABC SHELF.

8. ALL MANHOLES SHALL BE PRECAST CONCRETE PER MAG STD DTL 420 WITH 5-FOOT DIAMETER SHAFTS, 30-INCH DIAMETER COVERS, AND WITHOUT STEPS. MANHOLES IN ARTERIAL STREETS AND FOR SEWERS 18" AND LARGER SHALL INCLUDE CORROSION PROTECTION. ALL MANHOLES SHALL BE SPRAYED WITH PESTICIDE COATING. SEE THE LIST OF APPROVED PRODUCTS FOR CORROSION PROTECTION AND PESTICIDE COATINGS.

9. CONCRETE MANHOLES CONSTRUCTED IN ARTERIAL STREETS SHALL BE COATED WITH A CORROSION PROTECTIVE COATING APPLIED IN ACCORDANCE WITH THE MANUFACTURER'S SPECIFICATION.

10. CORROSION PROTECTIVE MANHOLES SHALL INCLUDE COMPOSITE FRAMES AND COVERS, COMPOSITE ADJUSTMENT RINGS, COMPOSITE OR POLYMER CONCRETE CONE AND RISER SECTIONS AND CAST-IN-PLACE BASES WITH APPROVED PROTECTIVE COATING. REFER LIST OF APPROVED PRODUCTS, SUPPLEMENTS TO MAG SECTIONS 345 AND 625, AND DETAILS C-400 AND C-401. CORROSION-PROTECTIVE MANHOLES AND MATERIALS USED SHALL BE AS SPECIFIED ON THE PLANS AND/OR SPECIAL PROVISIONS.

11. MANHOLES SERVING PUBLIC SEWER LINES 12-INCH AND SMALLER AND NOT WITHIN ARTERIAL STREETS SHALL BE COATED WITH A LATEX INSECTICIDE PAINT APPLIED IN ACCORDANCE WITH THE MANUFACTURER'S RECOMMENDATIONS. REFER TO THE CITY'S LIST OF APPROVED PRODUCTS FOR ALLOWABLE INSECTICIDE COATING PRODUCTS. THE COATING SHALL BE APPLIED IN ACCORDANCE WITH US ENVIRONMENTAL PROTECTION AGENCY RECOMMENDATIONS STARTING FROM THE TOP OF THE MANHOLE TO A DEPTH OF 8 FEET BELOW.

12. MANHOLE FRAME AND COVERS SHALL BE ADJUSTED PER C-401. DEBRIS SHIELDS SHALL BE USED TO PREVENT DEBRIS FROM ENTERING SANITARY SYSTEM. CONTRACTOR SHALL BE RESPONSIBLE TO CLEAN SYSTEM FOR A MINIMUM OF ONE REACH IF DEBRIS ENTERS SYSTEM. ANY MISSING OR DEFECTIVE FRAMES OR COVERS SHALL BE REPORTED TO THE CITY IN WRITING DURING THE INITIAL LOCATION PROCESS TO ALLOW FOR TIMELY REPLACEMENT.

SEWER NOTES (CONT'D):

13. ALL NEW 8" AND LARGER SEWER LINES (INCLUDING STUB-OUTS) SHALL BE CLOSED CIRCUIT TV (CCTV) INSPECTED BY CITY CCTV VENDER PRIOR TO FINAL ACCEPTANCE. CITY PAYS FOR THE INITIAL INSPECTION IN ACCORDANCE WITH MAG SECTION 611. OWNER/CONTRACTOR MAY CONTRACT DIRECTLY WITH CITY'S CCTV VENDER OR USE THEIR PREFERRED NASSCO CERTIFIED CONTRACTOR FOR ADDITIONAL CCTV INSPECTION(S). SEWER LINES SHALL BE VACTORED AND WATER ADDED TO THE SYSTEM PRIOR TO CCTV INSPECTION, WITNESSED BY CITY INSPECTOR. ANY DEFECTS IN THE PIPE, CONSTRUCTION METHODS, OR INADEQUATE CLEANING SHALL BE CORRECTED AT NO ADDITIONAL COST TO THE CITY. PIPE DEFLECTIONS GREATER THAN ONE-INCH SHALL NOT BE ALLOWED. CITY CCTV VENDER SHALL INSPECT LINES AGAIN PRIOR TO END OF ONE-YEAR WARRANTY, PAID BY THE CITY.

14. A PLUG SHALL BE INSTALLED AT THE POINT(S) OF CONNECTION TO EXISTING LINES (OUTFALLS) AT THE START OF CONSTRUCTION PER C-403. EACH RESPECTIVE PHASE SHALL BE PLUGGED AND REMAIN PLUGGED UNTIL ACCEPTED BY THE CITY. NO FLOWS SHALL BE RELEASED INTO THE CITY SANITARY SEWER UNTIL ALL TESTS HAVE BEEN PASSED AND APPROVED BY THE CITY. FAILURE TO INSTALL PLUG MAY RESULT IN CLEANING EXISTING SEWER ONE-MILE IN EACH DIRECTION.

GRADING AND DRAINAGE NOTES:

1. A GRADING PERMIT IS REQUIRED.

2. NO MINIMUM FINISH FLOOR ELEVATION SHALL BE ALTERED.

3. STAKING FINISH FLOOR ELEVATION IS THE RESPONSIBILITY OF THE DEVELOPER AND HIS ENGINEER.

4. CONTRACTOR SHALL PROVIDE GRADING FOR POSITIVE DRAINAGE IN ALL RETENTION BASINS AT ELEVATIONS AS SHOWN ON THE PLANS. BOTTOM OF BASIN SHALL BE GRADED TO DRAIN TOWARD DRYWELLS (WHEN USED). MAXIMUM SIDE SLOPES SHALL BE 4:1.

5. DRYWELL INLET GRATE SHALL BE FLUSH WITH ROAD SURFACE OR TURF, OR 1-1/2" ABOVE THE FINISHED GRADE OF DECOMPOSED GRANITE LANDSCAPED AREAS.

6. DRILLING LOGS FOR DRYWELLS WILL BE FURNISHED TO THE CITY INSPECTOR PRIOR TO FINAL ACCEPTANCE.

7. A PERCOLATION TEST SHALL BE REQUIRED OF COMPLETED DRYWELLS PRIOR TO ACCEPTANCE. SHOULD EXISTING SOIL CONDITIONS BE ENCOUNTERED WHICH LACK SUFFICIENT PERCOLATION RATES, ADDITIONAL DRYWELLS OR AN ALTERNATE METHOD OF STORM WATER RUN-OFF DISPOSAL WILL BE REQUIRED.

DRYWELL KEY MAP #	ADEQ REG #	FIELD PERC RATE (CFS)
N/A	N/A	N/A

8. DRYWELL CONSTRUCTION SHALL BE DONE ONLY BY CONTRACTORS LICENSED BY THE ARIZONA DEPARTMENT OF ENVIRONMENTAL QUALITY. APPLICATION FOR DRYWELL REGISTRATION WAS SUBMITTED TO ARIZONA DEPARTMENT OF ENVIRONMENTAL QUALITY ON 4/5/2012 (DATE)

9. THE APPROVED DRYWELL REGISTRATION SHALL BE SUBMITTED TO THE CITY BY THE DEVELOPER OR HIS ENGINEER AT THE TIME AS-BUILTS ARE SUBMITTED.

10. ALL WEEP HOLES IN WALLS SHALL BE PROVIDED WITH EROSION PROTECTION 12" THICK WITH D50 = 4" RIPRAP, 24" IN WIDTH, EXTENDED TO THE BACK OF SIDEWALK OR TO THE BOTTOM OF RETENTION BASIN, WHICHEVER APPLIES.

11. A RETAINING WALL WILL BE REQUIRED IF AT THE COMPLETION OF GRADING THERE EXISTS MORE THAN ONE FOOT OF DIFFERENCE IN ELEVATION BETWEEN THIS SITE AND ADJACENT PROPERTIES.

12. SCREEN WALLS OVER 7', RETAINING WALLS OVER 4' MUST HAVE A BUILDING PERMIT AND BE IN CONFORMANCE WITH CHANDLER BUILDING CODE.

13. THE EXISTING RETENTION AND DRAINAGE FACILITIES ON THIS SITE WILL NOT BE REMOVED FROM SERVICE UNTIL THE PERMANENT RETENTION AND DRAINAGE FACILITIES ARE FUNCTIONAL.

PAVING NOTES:

1. THE LOCATION OF ALL VALVES MUST BE REFERENCED AT ALL TIMES BY THE CONTRACTOR DURING CONSTRUCTION.

2. NO PAVING CONSTRUCTION SHALL BE PERFORMED UNTIL ALL UNDERGROUND UTILITIES WITHIN THE RIGHT-OF-WAY HAVE BEEN COMPLETED.

3. THE BASE COURSE WILL NOT BE PLACED ON SUBGRADE UNTIL BASE REQUIREMENTS HAVE BEEN COMPLETED AND ACCEPTED BY THE CITY ENGINEER.

4. GUTTERS WILL BE WATER TESTED IN THE PRESENCE OF THE CITY ENGINEER TO INSURE PROPER DRAINAGE PRIOR TO FINAL APPROVAL.

5. THE EXACT POINT OF PAVEMENT MATCHING FOR TERMINATION AND OVERLAY MAY BE DETERMINED IN THE FIELD BY THE CITY ENGINEER.

6. NO JOB WILL BE CONSIDERED COMPLETE UNTIL ALL CURBS, PAVEMENT AND SIDEWALKS HAVE BEEN SWEPT CLEAN OF ALL DIRT AND DEBRIS.

7. STREET NAME SIGNS WILL BE INSTALLED BY THE CITY ON DEVELOPER INSTALLED POLES AT THE DEVELOPER'S EXPENSE. POLES SHALL BE PER C-613. PAYMENT WILL BE COLLECTED AT THE TIME A PAVING PERMIT IS ISSUED.

8. ALL TRAFFIC CONTROL SIGNS SHALL BE CONSTRUCTED OF HIGH INTENSITY GRADE SHEETING, UNLESS OTHERWISE NOTED.

9. ALL STREET SECTIONS, EXCEPT ARTERIALS, SHALL HAVE INSTALLED A PRESERVATIVE SEAL COAT PER MAG SECTION 334 AND SHALL BE TIRE RUBBER MODIFIED SURFACE SEAL PER MAG SECTION 718. THE SEAL SHALL BE INSTALLED AT THE END OF THE WARRANTY PERIOD, OR AT THE CITY'S OPTION, A FEE MAY BE COLLECTED IN LIEU OF THE APPLICATION.

10. ALL CURB-OPENING CATCH BASIN ACCESS COVERS SHALL BE PER MAG STD DTL 536, ALTERNATE COVER. A STORM DRAIN INLET MARKER IN ACCORDANCE WITH C-508 SHALL BE INSTALLED ON THE TOP OF THE CURB AND ALIGNED WITH THE CENTER OF THE INLET.

11. PAVEMENT MATCHING AND SURFACING REPLACEMENT SHALL BE IN ACCORDANCE WITH MAG STD DTL 200, MAG SECTION 336, AND SECTION 337. ALL CRACKS AND JOINTS SHALL BE SEALED, UNLESS OTHERWISE DIRECTED BY CITY ENGINEER OR STREET SUPERINTENDENT.

WILSON ENGINEERS
1620 West Fountainhead Pkwy
Suite 501 85282
Tempe, Arizona
Phone: (480) 893-8860
Improving Arizona's Infrastructure Since 1942

CITY OF CHANDLER
RECLAIMED WATER INTERCONNECT FACILITY

GENERAL NOTES - 1

CITY PROJECT NO. WW1901.203
WILSON PROJECT NO. 21007

Design: SZ	Drawn: JMJ	Checked: SR
Date: 02/2022	Wilson Project No.: 21007	

Rev#	Date	Description	By

VERIFY SCALES
BAR IS ONE INCH ON ORIGINAL DRAWING
0 1"
IF NOT ONE INCH ON THIS SHEET, ADJUST SCALES ACCORDINGLY

Registered Professional Engineer
CERTIFICATE NO.
30185
UDAY K. GANDHE
Date Signed 02/28/22
ARIZONA U. S. A.

Registered Professional Engineer
CERTIFICATE NO.
41008
SREERAM RENGARAJ
Date Signed 02/28/22
ARIZONA U. S. A.

Sheet No. G-4

XREFS: TB-WE-D; SEAL-UKG; SEAL-SR

G:\PROJECT\21007\CADD\DESIGN\GENERAL\21007G4.DWG, 2/25/2022 2:13:22 PM, acantella, 1:2.1887

AGENCY REVIEW

APS AND/OR SRP FACILITIES:

NOTE: THE SALT RIVER PROJECT, ARIZONA PUBLIC SERVICE, AND OTHER UTILITY PROVIDERS MAINTAIN ENERGIZED AERIAL AND UNDERGROUND ELECTRICAL POWER LINES AND GAS PIPE LINES IN THE IMMEDIATE VICINITY OF THIS PROJECT. DO NOT CONSIDER THESE LINES TO BE INSULATED OR ENCASED. CONSTRUCTION PERSONNEL WORKING IN PROXIMITY TO THESE UTILITY LINES ARE EXPOSED TO AN EXTREME HAZARD. CONTRACTORS, THEIR EMPLOYEES, AND ALL OTHER CONSTRUCTION PERSONNEL WORKING ON THIS PROJECT ARE WARNED OF THE DANGER AND INSTRUCTED TO TAKE ADEQUATE PROTECTIVE MEASURES. (SEE OSHA STD. 1926) AS AN ADDITIONAL SAFETY PRECAUTION, CONTRACTORS ARE INSTRUCTED TO CALL THE SALT RIVER PROJECT AT (602) 236-8888 OR ARIZONA PUBLIC SERVICE AT (602) 371-7171, TO ARRANGE, IF POSSIBLE, TO HAVE THESE LINES DE-ENERGIZED OR RELOCATED WHEN THE WORK REACHES THEIR IMMEDIATE VICINITY. THE COST OF SUCH TEMPORARY ARRANGEMENTS SHALL BE BORNE BY THE CONTRACTOR. A 2 WORKING DAY (48 HOUR) ADVANCE NOTICE MUST BE GIVEN BUT UP TO 60 DAYS LEAD TIME MAY BE REQUIRED FOR RELOCATION OR OTHER ARRANGEMENTS.

UTILITIES LOCATION:

UTILITIES LOCATION: THE CONTRACTOR, 2 WORKING DAYS (48 HOURS) PRIOR TO PERFORMING UNDERGROUND EXCAVATION, SHALL TELEPHONE THE BLUE STAKE CENTER AT (602) 263-1100 TO OBTAIN FIELD UNDERGROUND UTILITIES LOCATION MARKING, THE CONTRACTOR SHALL UNCOVER AHEAD OF CONSTRUCTION, ALL LINES BEING TIED INTO AND ALL INTERSECTING UTILITIES SHOWN ON THE PLANS OR MARKED BY BLUE STAKE TO VERIFY THEIR LOCATION AND DEPTH. UTILITY SERVICES SHALL BE LOCATED AND PROTECTED BY THE CONTRACTOR. ALL PRECAUTIONS SHALL BE USED WHILE WORKING NEAR ALL UTILITIES, TO AVOID INJURY OR DEATH TO PERSONNEL PROPERTY DAMAGE AND/OR INTERRUPTION OF SERVICE. (SEE OSHA STD 1926-651 (A)).

RECLAIMED WATER NOTES:

1. RECLAIMED WATER LINES SHALL BE CONSTRUCTED IN ACCORDANCE WITH MAG SECTION 616, CITY SUPPLEMENTS, AND THESE NOTES.
2. THE MINIMUM DEPTH OF COVER WITHIN THE RIGHT-OF-WAY OF ARTERIAL STREETS SHALL BE 7', AND IN ACCORDANCE WITH THE MANUFACTURER'S RECOMMENDATIONS.
3. PIPE SEPARATION ALSO SHALL CONFORM TO ARIZONA RULE R18-9-602, PIPELINE CONVEYANCES OF RECLAIMED WATER.
4. A REDUCED PRESSURE BACKFLOW DEVICE SHALL BE INSTALLED, AS PART OF THE ORIGINAL SYSTEM, ON A RECLAIMED WATER SYSTEM THAT WILL USE POTABLE WATER AS AN INITIAL SOURCE AND WILL USE RECLAIMED WATER AS A SOURCE LATER. ON SUCH A SYSTEM, CONCURRENT CONNECTIONS SHALL NOT BE MADE AT ANY TIME TO BOTH POTABLE WATER AND RECLAIMED WATER SYSTEMS, REGARDLESS WHETHER ONE OR BOTH SYSTEMS ARE DEVOID OF SUPPLY.
5. PRIVATE RECLAIMED WATER LINES SHALL BE INSTALLED IN SLEEVES WHERE THEY CROSS PUBLIC OR PRIVATE RIGHT-OF-WAY. PIPE SLEEVES SHALL BE PIPE MEETING THE REQUIREMENTS FOR CONVEYANCE PIPE AND SHALL BE TWO NOMINAL SIZES LARGER.
6. RECLAIMED WATER IRRIGATION SYSTEM SPRINKLER HEADS, VALVE BOXES AND COVERS, AND FLOW CONTROL HANDLES ON VALVES SHALL BE PURPLE.
7. THE WORDS "RECLAIMED WATER" SHALL BE STENCILED ON BACKFLOW ASSEMBLIES USING THE COLOR PURPLE OR SHALL BE OTHERWISE BE LEGIBLY MARKED.
8. PVC PIPE SHALL NOT BE EXPOSED TO DIRECT ULTRAVIOLET RADIATION (SUNLIGHT) FOR MORE THAN 30 DAYS, WHETHER THE TIME IS CONTINUOUS OR CUMULATIVE. PVC PIPE SHALL BE PROTECTED FROM DIRECT ULTRAVIOLET RADIATION FOR ANY TIME OF EXPOSURE EXCEEDING 30 DAYS. PVC PIPE THAT HAS BEEN DISCOLORED BY EXPOSURE TO ULTRAVIOLET RADIATION IS UNACCEPTABLE.
9. VALVES 4" THROUGH 24" SHALL BE GATE VALVES UNLESS NOTED OTHERWISE. EACH VALVE SHALL BE FURNISHED WITH A BAR WELDED TO THE OPERATING NUT IN ACCORDANCE WITH C-406, THEREBY REQUIRING A TOOL WITH A KEY SLOT TO EXERCISE THE VALVE. VALVE BOXES AND COVERS SHALL CONFORM TO C-406. A DEBRIS CAP, WHICH CONFORMS TO MAG STD DTL 392 SHALL BE INSTALLED IN EACH VALVE BOX.
10. NO VALVE, RISER, BOX OR COVER SHALL BE LOCATED BENEATH OR WITHIN A SIDEWALK OR SIDEWALK RAMP.
11. CITY RECLAIMED WATER VALVES SHALL BE OPERATED BY CITY OF CHANDLER PERSONNEL ONLY.
12. CITY OF CHANDLER WILL FURNISH AND INSTALL WATER METERS WITH PREVAILING COSTS PAID BY THE DEVELOPER.
13. METER BOXES AND COVERS SHALL BE SUPPLIED BY THE DEVELOPER AND SHALL BE INSTALLED BY THE CONTRACTOR FACING AWAY FROM THE STREET. METER BOXES FOR METERS 2" AND SMALLER SHALL BE CONCRETE AND SHALL CONFORM TO MAG STD DTL 320 OR SHALL BE POLYMER CONCRETE AND CONFORM TO C-301. THE INSIDE OF EACH METER BOX SHALL BE PAINTED PURPLE. METER BOX COVERS SHALL BE POLYMER CONCRETE AND SHALL CONFORM TO C-301. METER BOX COVERS SHALL BE CAST WITH THE WORDS "RECLAIMED WATER" IN THE OUTSIDE SURFACE OR HAVE TAGS WITH THE WORDS "RECLAIMED WATER" FIRMLY ATTACHED TO THE OUTSIDE SURFACE. LETTERING SIZE AND FORMAT SHALL BE SIMILAR TO THE LETTERING IN MAG STD DTL 310. TAGS SHALL OTHERWISE MEET THE REQUIREMENTS FOR RECLAIMED WATER VALVE TAGS.
14. METER VAULTS SHALL BE IN CONFORMANCE TO C-416. THE INSIDE OF EACH METER VAULT AND METER BOX SHALL BE PAINTED PURPLE. METER VAULT AND METER BOX COVERS SHALL INCLUDE THE WORDS "RECLAIMED WATER" AS REQUIRED FOR METER BOX COVERS ABOVE FOR METERS 2" AND SMALLER. THE CITY OF CHANDLER WATER DISTRIBUTION DIVISION SHALL BE NOTIFIED 24 HOURS BEFORE INSTALLATION AT (480) 782-3700.
15. WARNING SIGNS: AREAS IRRIGATED WITH RECLAIMED WATER SHALL BE IDENTIFIED BY SURFACE MOUNTED SIGNS, AT LEAST 12" WIDE BY 9" HIGH, OF C-405 PAGE 11 OF 12. SIGNS SHALL BE PROMINENTLY LOCATED AT ALL SUBDIVISION AND PARK ENTRANCES, IN ALL AREAS SUBJECT TO IRRIGATION, AND AT ALL LAKES AND WATER FEATURES. SIGNS SHALL BE POSTED AT EACH PEDESTRIAN ENTRANCE AND ACCESS POINT TO AN AREA WHERE RECLAIMED WATER IS USED. SIGNS SHALL BE SPACED AT A MAXIMUM INTERVAL OF 100 YARDS, EXCEPT FOR ROADWAY MEDIANS, WHERE SIGNS MAY BE SPACED AT A MAXIMUM INTERVAL OF 300 YARDS.
16. RECLAIMED WATER LINES GREATER THAN OR EQUAL TO 4" IN DIAMETER SHALL BE TESTED IN ACCORDANCE WITH THE SAME REQUIREMENTS AS POTABLE WATER LINES. RECLAIMED WATER LINES LESS THAN 4" IN DIAMETER ARE NOT REQUIRED TO BE TESTED. ON A RECLAIMED WATER SYSTEM THAT WILL NOT USE POTABLE WATER AS AN INITIAL SOURCE, RECLAIMED WATER MAY BE USED IN LIEU OF POTABLE WATER TO FILL RECLAIMED WATER PIPE BEING TESTED. DISINFECTION OF THE RECLAIMED WATER MAIN SHALL NOT BE REQUIRED.
17. RECLAIMED WATER LINES LARGER THAN TWO (2) INCHES IN DIAMETER SHALL HAVE LOCATOR WIRE INSTALLED PER C-408.

WATER NOTES:

1. ALL EXTENSIONS TO EXISTING WATER LINES OVER ELEVEN (11) MONTHS IN AGE SHALL HAVE A NEW VALVE OF LIKE SIZE INSTALLED AT THE POINT OF EXTENSION. A 3/4" SADDLE AND RISER SHALL BE INSTALLED ON THE LINE BETWEEN THE NEW VALVE AND THE FIRST EXISTING VALVE. THIS LINE WILL BE FLUSHED AND TESTED BY THE CITY AND THE 3/4" NUT AND RISER REMOVED.
2. WATERLINES SHALL BE INSTALLED PER C-308 AND THE CITY SUPPLEMENT TO SECTION 610. TESTING SHALL BE IN ACCORDANCE WITH SECTION 611. DEVELOPER IS RESPONSIBLE FOR TESTING PRIVATE WATERLINES 4" AND LARGER.
3. FIRE HYDRANTS SHALL BE FURNISHED BY THE CONTRACTOR AND INSTALLED IN ACCORDANCE WITH C-303 AND C-305.
4. ALL WATER SERVICE LINE AND METER BOX INSTALLATIONS SHALL CONFORM TO C-301. METER BOXES AND LIDS SHALL BE SUPPLIED BY THE DEVELOPER AND INSTALLED FACING THE LOT.
5. CITY OF CHANDLER WILL FURNISH AND INSTALL ALL WATER METERS WITH PREVAILING COSTS TO BE PAID BY DEVELOPER. THE CITY OF CHANDLER WATER DIVISION SHALL BE NOTIFIED AT (480) 782-3700 24 HOURS PRIOR TO INSTALLATION. THE DEVELOPER SHALL PROVIDE ANY NECESSARY WATER METER ADAPTERS FOR CONNECTION TO THE SERVICE LINES.
6. ALL VALVES 6" - 24" SHALL BE GATE TYPE IN CONFORMANCE WITH MAG SECTION 630.3, UNLESS OTHERWISE NOTED.
7. ALL VALVE BOXES SHALL CONFORM TO C-307.
8. CITY WATER VALVES SHALL BE OPERATED BY CITY PERSONNEL ONLY. CITY REQUIRES A 48 HOUR NOTICE FOR SYSTEM SHUTDOWNS. CONTRACTOR IS REQUIRED TO NOTIFY AFFECTED CUSTOMERS 24 HOURS PRIOR. BUSINESS' MAY REQUIRE AFTER HOURS SHUTDOWNS. RESIDENTIAL FLOWS AFTER SHUTDOWN MAY REQUIRE A PUMP. CONTRACTOR IS RESPONSIBLE TO INSTALL 2" TAPS TO RELIEVE PRESSURE AND ALLEVIATE RESIDUAL FLOWS WHEN NEEDED.
9. ALL TAPS SHALL USE A BRONZE SERVICE SADDLE. EIGHT (8) INCHES OR LESS SHALL BE SINGLE STRAP AND TEN (10) INCHES OR GREATER SHALL BE DOUBLE STRAP.
10. TAPS IN ACP SHALL BE MADE IN ACCORDANCE WITH THE RECOMMENDATIONS OF THE ACP MANUFACTURERS ASSOCIATION.
11. ALL FIRELINE PIPING, POTABLE WATER DISTRIBUTING PIPING LARGER THAN TWO (2) INCHES IN DIAMETER SHALL HAVE TRACER WIRES INSTALLED PER C-408.
12. ALL PIPE IN THE GROUND SHALL HAVE AWG THWN #14 INSULATED COPPER TRACING WIRE ATTACHED TO THE PIPE AND INTERCONNECTED TO VALVES AT VALVE BOX SPACING INTERVALS. WARNING TAPE IS TO BE USED BURIED A MINIMUM 12" ABOVE THE PIPE. SEE C-408.
13. POLYETHYLENE ENCASEMENT SHALL CONFORM WITH THE APPLICABLE REQUIREMENTS OF AWWA C-600 & AWWA C-105.
14. MECHANICAL OR RESTRAINED JOINT DUCTILE IRON PIPE SHALL BE USED FOR WATER LINE PROTECTION WHEN MAG STD DTL 404 IS SPECIFIED ON THE PLANS.
15. VALVE BOX AND COVER GRADE LOCATED OUTSIDE OF A PAVED AREA SHALL BE SET ONE HALF INCH ABOVE SIDEWALK OR ADJACENT GRADE PER C-317.
16. NO VALVE BOX SHALL BE LOCATED WITHIN SIDEWALK OR SIDEWALK RAMP.
17. ALL 1" SERVICES SHALL BE INSTALLED WITH APPROVED ANGLE BALL METER VALVE, OF A SIZE DEPENDENT ON WATER METER SIZE. SEE C-301.
18. ALL FIRE HYDRANTS SHALL BE PROVIDED WITH "OUT OF SERVICE" SIGNS AT TIME OF INSTALLATION. THE SIGNS SHALL COMPLY WITH FIRE DEPARTMENT STANDARD DETAIL NO. FD123 AND SHALL REMAIN ON THE FIRE HYDRANTS UNTIL THE WATER LINES ARE TESTED, APPROVED AND PRESSURIZED. THE SIGNS SHALL BE REINSTALLED AT ANY TIME ANY FIRE HYDRANTS ARE TAKEN OUT OF SERVICE, REGARDLESS OF REASON OR THE AMOUNT OF TIME THE FIRE HYDRANTS ARE EXPECTED TO BE OUT OF SERVICE, AND DISPATCH SHALL BE NOTIFIED AT (480) 782-4130. ONLY CITY PERSONNEL SHALL REMOVE A SIGN.

FIRE DEPARTMENT NOTES TO CONTRACTOR:

CONSTRUCTION

- FIRE DEPARTMENT VEHICLE ACCESS ROADWAYS SHALL BE PROVIDED AND MAINTAINED THROUGHOUT CONSTRUCTION. TEMPORARY ACCESS ROADS SHALL HAVE AN UNOBSTRUCTED WIDTH OF NOT LESS THAN TWENTY (20) FEET AND AN UNOBSTRUCTED VERTICAL CLEARANCE OF NO LESS THAN FIFTEEN (15) FEET CONSTRUCTED OF SIX (6) INCH COMPACTED AB, GRAVEL OR OTHER APPROVED MATERIALS. NO TRENCHING ACROSS FIRE ACCESS ROADS IS ALLOWED.
- PERMANENT FIRE VEHICLE ACCESS ROADWAYS SHALL HAVE AN UNOBSTRUCTED WIDTH OF NOT LESS THAN TWENTY (20) FEET EXCLUSIVE OF SHOULDERS, EXCEPT FOR APPROVED SECURITY GATES IN ACCORDANCE WITH SECTION 503.6 OF THE 2018 IFC, AN UNOBSTRUCTED VERTICAL CLEARANCE OF NOT LESS THAN FIFTEEN (15) FEET CONSTRUCTED OF AN ALL-WEATHER SURFACE. IF HYDRANTS ARE PLACED IN THE ACCESS ROAD, THE WIDTH SHALL BE AN UNOBSTRUCTED WIDTH OF NOT LESS THAN TWENTY-SIX (26) FEET CONSTRUCTED OF AN ALL-WEATHER SURFACE.
- APPROVED FIRE FLOW AND WATER SUPPLY SHALL BE PROVIDED AND MAINTAINED THROUGHOUT CONSTRUCTION. PRIOR TO ANY COMBUSTIBLES BEING BROUGHT ON SITE, AN APPROVED WATER SUPPLY SHALL BE AVAILABLE.

PLANS: BUILDING & SYSTEMS

- ANY WORK (INSPECTION, TESTING OR MAINTAINING) CONDUCTED ON FIRE PROTECTION SYSTEMS SHALL BE DONE BY A CONTRACTOR LICENSED TO PERFORM SUCH WORK BY THE STATE OF ARIZONA, AND CURRENTLY PERMITTED BY THE CHANDLER FIRE DEPARTMENT (SEE FD FORM NO. 707 - FIRE PROTECTION CONTRACTOR PERMIT).
- ALL CONSTRUCTION, MODIFICATIONS OR INSTALLATION SHALL COMPLY WITH NATIONALLY RECOGNIZED CODES AND STANDARDS, AND THE CITY CODES.
- FIRE SPRINKLER SYSTEM (S) SHALL BE INSTALLED IN ACCORDANCE WITH THE ADOPTED FIRE CODE, NFPA 13, AND CITY OF CHANDLER CODES.
- FIRE ALARM SYSTEMS SHALL BE INSTALLED IN ACCORDANCE WITH THE ADOPTED FIRE CODE, NFPA 72 AND CITY OF CHANDLER CODES.
- STANDPIPE & HOSE SYSTEMS SHALL BE INSTALLED IN ACCORDANCE WITH THE ADOPTED FIRE CODE, NFPA 14 AND CITY OF CHANDLER CODES.
- WET CHEMICAL EXTINGUISHING SYSTEMS SHALL BE INSTALLED IN ACCORDANCE WITH THE ADOPTED FIRE CODE, NFPA 17A AND CITY OF CHANDLER CODES.
- FIRE DEPARTMENT CONNECTIONS (FDC'S) INSTALLED IN ACCORDANCE WITH THE ADOPTED FIRE CODE, BUILDING CODE AND NFPA 13 FIRE SPRINKLER SYSTEMS SHALL BE TWO AND A HALF (2½) INCH FEMALE SWIVELS WITH NATIONAL STANDARD THREADS (NST). NO FDC SHALL BE LOCATED ON THE BUILDINGS (EXCEPT AS APPROVED BY THE FIRE MARSHAL OR IN THE DOWNTOWN DEVELOPMENT AREA PER FD144). WITH RESPECT TO HYDRANTS, DRIVEWAYS, BUILDINGS AND LANDSCAPING, FDC'S SHALL BE SO LOCATED THAT FIRE APPARATUS AND HOSE CONNECTED TO SUPPLY THE SYSTEM WILL NOT OBSTRUCT ACCESS TO THE BUILDINGS FOR OTHER FIRE APPARATUS. THE LOCATION OF FDC'S SHALL BE LOCATED ON PRIVATE PROPERTY SIX (6) TO TEN (10) FEET BEHIND THE CURB (OF STREET) AT A PERMANENT ENTRANCE TO THE SITE OR AS OTHERWISE APPROVED BY THE FIRE MARSHAL.
- ALL FIRE DEPARTMENT HOSE CONNECTIONS AND STANDPIPE HOSE CONNECTIONS FOR FIRE DEPARTMENT USE SHALL BE TWO AND A HALF (2½) INCH NATIONAL STANDARD THREADS. NO HOSE SHALL BE ATTACHED TO THE FIRE DEPARTMENT HOSE STATIONS.
- RESIDENTIAL (MULTI-FAMILY) - ALL PRIVATE SHARED DOMESTIC AND RESIDENTIAL FIRE LINE MAINS SHALL HAVE A REDUCED PRESSURE BACKFLOW INSTALLED PER COC DETAIL C-315.
- FDC'S FOR NFPA 13R SPRINKLER SYSTEMS SHALL BE SINGLE FEMALE SWIVELS WITH ONE AND A HALF (1½) NATIONAL STANDARD THREADS.
- FIRE ALARM ROOM(S) & FIRE SPRINKLER ROOM(S) SHALL BE SIGNED IN ACCORDANCE WITH FD106 AND ZONE MAPS FOR FIRE ALARMS &SPRINKLER SYSTEMS SHALL BE PLACED AT EACH LOCATION (I.E. PANEL AND RISER).

TENANT IMPROVEMENT PROJECTS

ANY MODIFICATIONS TO EXISTING FIRE PROTECTION SYSTEMS SHALL BE SUBMITTED FOR PLAN REVIEW AND PERMITS TO THE DEVELOPMENT SERVICES DIVISION. PLANS SHALL BE REVIEWED, APPROVED, PERMIT ISSUED AND ON SITE PRIOR TO WORK BEGINNING.

INSPECTIONS

ALL NEW CONSTRUCTION AND TENANT IMPROVEMENT INSPECTIONS ARE CONDUCTED BY THE DEVELOPMENT SERVICES DIVISION, BUILDING SAFETY DEPARTMENT. PLEASE USE THE ON-LINE SCHEDULING TOOL TO SCHEDULE INSPECTIONS: https://developmentpermits.chandleraz.gov/clics/

HEADS	SPRINKLER SYSTEM TEST REQUIRED
9 OR <	A VISUAL INSPECTION ONLY IS REQUIRED
10 - 19	50 PSI ABOVE NORMAL STATIC PRESSURE FOR 15 MINUTES
20 OR >	50 PSI ABOVE NORMAL STATIC PRESSURE FOR 2 HOURS
ALL NEW SYSTEMS	PER NFPA 13

THE CONTRACTOR SHALL PROVIDE THE CITY INSPECTOR WITH COPY OF:

- "CONTRACTOR'S MATERIAL AND TEST CERTIFICATE FOR ABOVEGROUND PIPING" IN ACCORDANCE WITH NFPA 13; AND
- "CONTRACTORS MATERIAL & TEST CERTIFICATE FOR UNDERGROUND PIPING" IN ACCORDANCE WITH NFPA 24; AND
- "CERTIFICATE OF COMPLIANCE" FOR FIRE ALARM SYSTEMS IN ACCORDANCE WITH NFPA 72, UPON SUCCESSFUL COMPLETION OF THE SYSTEM TEST AND PRIOR TO CITY ACCEPTANCE OF THE SYSTEM.

SIGNING AND STRIPING

1. THE CITY TRANSPORTATION ENGINEER'S OFFICE SHALL BE NOTIFIED 5 BUSINESS DAYS PRIOR TO STARTING ANY SIGNING OR STRIPING WORK AT (480) 782-3454.
2. ALL PAVEMENT MARKINGS, SIGN MATERIALS AND CONSTRUCTION SHALL CONFORM TO ARIZONA DEPARTMENT OF TRANSPORTATION STANDARD DRAWINGS AND SPECIFICATIONS UNLESS OTHERWISE NOTED.
3. SIGN LOCATIONS AND OFFSETS MAY BE ADJUSTED BY THE CITY TRANSPORTATION ENGINEER TO IMPROVE VISIBILITY.
4. ALL MEDIAN NOSES SHALL BE PAINTED YELLOW WITH REFLECTIVE GLASS BEADS PER C-617.
5. ALL RAISED PAVEMENT REFLECTORS SHALL BE INSTALLED WITH CRAFCO PAVEMENT REFLECTOR ADHESIVE, OR EQUAL.
6. ALL TRAFFIC CONTROL SIGNS, EXCEPT STOP SIGNS, SHALL BE ATTACHED TO STREET LIGHT POLES IF THE POLE IS WITHIN 25 FT. OF SIGN LOCATION AS SHOWN ON THE SIGNING AND STRIPING PLANS.
7. ALL CROSSWALKS, STOP BARS, MINI-SKIPS, TURN ARROWS AND LEFT/RIGHT TURN LANE STRIPING SHALL BE THERMOPLASTIC.
8. ALL TRAFFIC CONTROL SIGNS SHALL BE CONSTRUCTED OF HIGH INTENSITY GRADE SHEETING SCREENED WITH 3-M APPROVED INKS OR EQUIVALENT APPROVED BY THE TRANSPORTATION DIVISION. WARRANTY DOCUMENTS ARE REQUIRED AND SHALL BE SUBMITTED PRIOR TO FINAL JOB ACCEPTANCE.
9. ALL EXISTING SIGNS TEMPORARILY REMOVED BY THE CONTRACTOR SHALL BE SALVAGED FOR REINSTALLATION BY THE CONTRACTOR. ALL EXISTING SIGNS PERMANENTLY REMOVED BY THE CONTRACTOR SHALL BE SALVAGED FOR RETURN TO THE CITY SIGN SHOP.
10. ALL CONFLICTING PAVEMENT MARKINGS WILL BE OBLITERATED BY WATER BLASTING BY THE CONTRACTOR. GRINDING IS NOT PERMITTED.
11. A SEALANT APPROVED BY THE CITY OF CHANDLER STREETS DIVISION SHALL BE APPLIED BY THE CONTRACTOR TO ALL AREAS OF PAVEMENT MARKING OBLITERATION. REFER TO THE LIST OF APPROVED PRODUCTS.
12. THE CITY TRANSPORTATION ENGINEER MAY REQUIRE THE CONTRACTOR TO ADJUST SIGNING AND STRIPING AS NECESSARY.
13. ALL CONFLICTING SIGNAGE SHALL BE REMOVED BY THE CONTRACTOR.
14. ALL CITY SIGNS MUST BE RETURNED TO THE CITY SIGN SHOP.

CONTRACTOR NOTES:

1. CONTRACTOR SHALL PROTECT ALL EXISTING FIRE HYDRANTS AND WATER LINE SERVICE TAPS IN PLACE DURING CONSTRUCTION. ALL EXISTING FIRE HYDRANTS AND SERVICE TAPS SHALL REMAIN IN SERVICE DURING CONSTRUCTION.
2. THE CONTRACTOR IS RESPONSIBLE FOR ARRANGING THE RELOCATION AND ASSOCIATED COSTS OF ALL UTILITIES. A UTILITY RELOCATION SCHEDULE SHALL BE SUBMITTED PRIOR TO THE ISSUANCE OF PERMITS.
3. CONTRACTOR IS ADVISED THAT A SOILS REPORT HAS BEEN PREPARED FOR THIS PROJECT AND IS AVAILABLE FOR CONTRACTORS INFORMATION PRIOR TO AND AFTER BID. CONTRACTOR SHALL BASE THE BID ON AND BE PREPARED TO PROVIDE TRENCH SHORING AS REQUIRED ON THIS PROJECT AT NO ADDITIONAL COST TO THE CITY IN THE EVENT UNSUITABLE SOILS ARE ENCOUNTERED DURING THE CONSTRUCTION OF THIS PROJECT.
4. CONTRACTOR SHALL MAINTAIN PLANT ROADWAY ACCESS TO ALL FACILITIES DURING CONSTRUCTION. IF THE WORK REQUIRES INTERRUPTION OF EXISTING ACCESS TO OPERATING PLANT FACILITIES THE CONTRACTOR SHALL PROVIDE TEMPORARY ACCESS (APPROVED BY ENGINEER) TO THESE FACILITIES.
5. THE CONTRACTOR SHALL PROVIDE A TEMPORARY THRUST RESTRAINT SYSTEM FOR EXISTING PIPES WHEREVER THE INSTALLATION OF NEW PIPES DISTURBS THE EXISTING PIPES THRUST RESTRAINT. UPON COMPLETION OF THE NEW PIPE INSTALLATION, THE CONTRACTOR SHALL RESTORE THE EXISTING PIPE THRUST RESTRAINT SYSTEM TO LIKE NEW CONDITION.

CALL TWO WORKING DAYS BEFORE YOU DIG
(602)-263-1100
BLUE STAKE CENTER

WILSON ENGINEERS
1620 West Fountainhead Pkwy
Suite 501 85282
Tempe, Arizona
Phone: (480) 893-8860
Improving Arizona's Infrastructure Since 1942

CITY OF CHANDLER
RECLAIMED WATER INTERCONNECT FACILITY

GENERAL NOTES - 2

CITY PROJECT NO. WW1901.203
WILSON PROJECT NO. 21007

By	Description	Project No.: 21007	Checked: SR
		Drawn: JMJ	
Rev#	Date	Design: SZ	Date: 02/2022

VERIFY SCALES
BAR IS ONE INCH ON ORIGINAL DRAWING
0 1"
IF NOT ONE INCH ON THIS SHEET, ADJUST SCALES ACCORDINGLY





Sheet No. G-5

AGENCY REVIEW

XREFS: TB-WE-D; SEAL-UKG; SEAL-SR

G:\PROJECT\21007\CADD\DESIGN\GENERAL\21007G5.DWG, 2/25/2022 2:14:10 PM, acantella, 1:2.1887

GENERAL SYMBOLS

CP1	SURVEY CONTROL POINT
XXXX.XX	PROPOSED GROUND ELEVATION
x 2807.70	EXISTING SPOT ELEVATION
1200.00	NEW ELEVATION (SECTION)
OR WS 1280.00	WATER SURFACE ELEVATION
SB-3	SOIL BORE LOCATION
SECTION NUMBER / SHEET ON WHICH SECTION IS LOCATED	
DETAIL NUMBER / SHEET ON WHICH DETAIL IS LOCATED	
	TRAFFIC SIGNAL
	LIGHT POLE
	MANHOLE
	VALVE BOX
FH	FIRE HYDRANT
	TREE/SHRUBBERY
	STRUCTURE/BUILDING
	HEADWALL
	CULVERT
	SIGN
	POWER POLE
	CANOPY SUPPORT
	GUY WIRE
	YARD HYDRANT
	GRADE BREAK

COORDINATE POINT LEGEND

CODE	DESCRIPTION
F	FINISH GRADE
P	POINT OF TANGENT/PIPE/OTHERS
S	SITE

ABBREVIATIONS

ABC	AGGREGATE BASE COURSE
AC	AGGREGATE COURSE
CMU	CONCRETE MASONARY UNIT
COC	CITY OF CHANDLER
CRWSR	COVERED RECLAIMED WATER STORAGE RESERVOIR
EL	ELEVATION
EP	EDGE OF PAVEMENT
FF	FINISH FLOOR
G	GROUND ELEVATION
GB	GRADE BREAK
LF	LINEAL FOOT
MAG	MARICOPA COUNTY ASSOCIATION OF GOVERNMENTS
MH	MANHOLE
PAD	PAD ELEVATIONS
R	RADIUS
TC	TOP OF CURB
TYP	TYPICAL

LINE LEGEND

	NEW CONSTRUCTION (SOLID)
	EXISTING CONSTRUCTION (SCREENED BACK)
	SURVEY CONTROL LINE
	EXTENTS OF GRADING
100+00	MONUMENT LINE/BASELINE
	CENTERLINE
	CUTTING PLANE OR SECTION LINE
	RIGHT-OF-WAY LINE
	EASEMENT LINE
	PROPERTY LINE
	NEW UTILITY
UTILITY	EXISTING UTILITY
	FUTURE FACILITY
	HIDDEN LINE
1250	PROPOSED INDEX CONTOUR
1250	EXISTING INDEX CONTOUR
	PROPOSED INTERMEDIATE CONTOUR
	EXISTING INTERMEDIATE CONTOUR
	DRAINAGE FLOW/SWALE LINE
	DIRECTION OF FLOW
	MATCH LINE
	BREAK LINE
	PROPOSED CHAINLINK FENCE
	EXISTING CHAINLINK FENCE
0.4%	PERCENT SLOPE
	EXISTING DIRT ROAD
	PROPOSED DIRT ROAD
	EXISTING ELECTRICAL
	EXISTING PAVED ROAD WITH CURB

GENERAL VALVE SYMBOLS

GATE VALVE (GENERIC)

BALL VALVE

PLUG VALVE

BUTTERFLY VALVE (FLANGED)

BUTTERFLY VALVE (WAFER)

CHECK VALVE

HOSE BIBB

PIPE JOINTS

	PIPE IN SECTION
	PIPE CONTINUATION
	FLANGED (FLG)
	MECHANICAL JOINT (MJ) OR FASTITE (FST)
	WELDED OR SOCKET (W)
	GROOVE TYPE COUPLING
	FLEXIBLE COUPLING
	PUSH ON (PO) OR BELL AND SPIGOT (BS)
	PUSH ON OR BELL AND SPIGOT (PVC /COPPER)

HATCH LEGEND

	REMOVABLE COVER
	ACCESS HATCH
	ASPHALT – SECTION
	CMU BLOCK
	CONCRETE
	EARTH
	GRATE – PLAN
	GRATE – SECTION
	GROUT
	PAVEMENT – PLAN
	REMOVAL/DEMOLITION
	RIPRAP – PLAN
	DECOMPOSED GRANITE

PROCESS EQUIPMENT CODES

CODE	DESCRIPTION
AB	AERATION BASIN
ACH	ALUMINUM CHLOROHYDRATE
ADM	ADMINISTRATION BUILDING
BLR	BLOWER BUILDING
BHT	BACKWASH HOLDING TANK
BSHY	BULK SODIUM HYPOCHLORITE FACILITY
BW	BACKWASH
CA	CITRIC ACID
CAS	SODIUM HYDROXIDE
CCB	CHLORINE CONTACT BASIN
CCD	CHLORINE CONTACT BASIN DRAIN PUMP STATION
CIP	CLEAN IN PLACE
CLD	HYPOCHLORITE DISINFECTION
CRR	COVERED RECLAIMED WATER STORAGE RESERVOIR
DW	DEWATERING
EL	ELECTRICAL
EPS	EFFLUENT PUMP STATION
ER	EMERGENCY RESERVOIR
FA	FOUL AIR
FIT	FILTRATION
FLO	FLOCCULATION
HVAC	HVAC
HW	HEADWORKS
IPS	INFLUENT PUMP STATION
MB	MAINTENANCE BUILDING
MFS	MEMBRANE FILTRATION SYSTEM
NPW	NON-POTABLE WATER
OCB	ODOR CONTROL SELECTOR BASIN
OCD	ODOR CONTROL-DEWATERING
OCH	ODOR CONTROL-HEADWORKS
OCS	ODOR CONTROL-SLUDGE HANDLING
OCT	ODOR CONTROL-THICKENER BUILDING
POT	POTABLE WATER
PS	PRIMARY SEDIMENTATION (FUTURE)
RAS	RETURN ACTIVATED SLUDGE
RM	RAPID MIX
RW	RECLAIMED WATER
RWR	RECLAIMED WATER RESEVOIR
SA	SULFURIC ACID
SB	PRE-STAGE BASIN
SBS	SODIUM BISULFITE
SC	SECONDARY CLARIFIERS
SCM	SCUM PUMP STATION
SCP	SECONDARY CLARIFIER POLYMER FEED
SCR	SCREENING
SH	SLUDGE HOLDING
SHY	SODIUM HYPOCHLORITE
SUB	ELECTRICAL SUBSTATION
TB	THICKENER BUILDING
TD	TANK DRAIN
TF	THICKENER FEED PUMP STATION
UV	ULTRAVIOLET DISINFECTION
UVD	UV DISINFECTION
UVS	UV SPLITTER BOX
WAS	WASTE ACTIVATED SLUDGE
WEQ	WASH WATER EQUALIZATION BASIN

DEVICE IDENTIFIERS

ACE	ELECTRIC ACTUATOR	DPV	DIAPHRAGM VALVE	PHP	PERISTALIC HOSE PUMPS
ACM	MECHANICAL ALTERNATOR	DSC	FUSED OR NON-FUSED DISCONNECT	PHT	PH INDICATING TRANSMITTER
AFM	AIR FLOW METER	ECU	EVAPORATIVE COOLER	PIR	POLYMER INJECTION RING
AFS	AIR FLOW SWITCH	ESE	EMERGENCY SHOWER/EYEWASH	PGR	GRINDER PUMP
AHU	AIR HANDLING UNIT	EWC	ELECTRIC WATER COOLER	PIT	PRESSURE INDICATING TRANSMITTER
AIC	AIR COMPRESSOR	EWH	ELECTRIC WATER HEATER	PLV	PLUG VALVE
ALM	ALARM	EXF	EXHAUST FAN	PMP	CENTRIFUGAL PUMP
ALT	ELECTRONIC ALTERNATOR	FAN	FAN	PNL	PANEL
ANV	ANGLE VALVE	FCV	FLOW CONTROL VALVE	PRG	PRESSURE REGULATING VALVE
ARV	AIR RELEASE VALVE	FEM	MAGNETIC FLOWMETER	PRI	PRESSURE GAUGE (INDICATOR)
ATS	AUTOMATIC TRANSFER SWITCH	FHV	FIRE HYDRANT VALVE	PRP	PROPELLER PUMP
AVC	AIR VOLUME CONTROLLER	FIT	FLOW INDICATOR TRANSMITTER	PRR	PRESSURE RELIEF VALVE
AVV	AIR RELEASE VACUUM VALVE	FLC	FLOCCULATOR	PRV	PRESSURE REDUCING VALVE
BAA	BIN ACTIVATOR	FLP	FLAP GATE	PS	PUMP, SUBMERSIBLE
BAV	BALL VALVE	FLS	FLOW SWITCH	PSS	PRESSURE SWITCH
BFP	BACKFLOW PREVENTER	FS	FINE SCREEN	PSV	PRESSURE STUSTAINING VALVE
BFV	BUTTERFLY VALVE	FSC	FINE SCREEN COMPACTOR	PVT	VERTICAL TURBINE
BLT	BELT FILTER PRESS	FSS	FLOW SENSOR	RFP	CONDUCTANCE LEVEL SWITCH
BLV	BLADDER VALVE	FSW	FINE SCREEN WASHER	RFS	ROTARY FINE SCREENS
BRC	BRIDGE CRANE	GAV	GATE VALVE	RLM	RADAR LEVEL METER
BRV	BACKPRESSURE RELIEF VALVE	GBT	GRAVITY BELT THICKENER	RMX	RAPID MIXER
CAL	CALIBRATION TUBES	GLV	GLOBE VALVE	RVF	ROTARY FEEDER
CAP	CAPACITOR	HBV	HOSE BIBB VALVE	SCN	SCREW CONVEYOR
CBL	CENTRIFUGAL BLOWER	HSA	HYDROGEN SULFIDE ANALYZER	SCR	SCRUBBER
CBR	CIRCUIT BREAKER	INJ	INJECTOR	SGR	SWITCHGEAR
CCP	CONVEYOR CONTROL PANEL	KGV	KNIFE GATE VALVE	SIP	SCRUBBER INLET PIPE
CCV	CONTROL CHECK VALVE	LCP	LOCAL CONTROL PANEL	SLC	SLUDGE COLLECTOR DRIVE
CFT	CATRIDGE FILTER	LDC	DUST COLLECTOR	SLG	SLIDE GATE
CHF	CHEMICAL FEEDER	LEP	LEVEL SENSOR PROBE	SLM	SONIC LEVEL METER
CHR	CHLORINATOR	LES	LEVEL SWITCH	SLP	COMPOSITE SAMPLER
CHS	CHLORINE RESIDUAL ANALYZER	LIT	LEVEL INDICATING TRANSMITTER	SMP	SAMPLE PUMP
CKB	BALL CHECK VALVE	LC	LOAD CELL	SOL	SOLENOID VALVE
CKD	DOUBLE DISK CHECK VALVE	LUP	LUBRICATION PUMP	SPC	SPRAY CONTROLLER
CKF	FLAPPER CHECK VALVE	MCC	MOTOR CONTROL CENTER	STG	STOP GATE
CKL	SLANTING DISK CHECK VALVE	MDP	MAIN DISTRIBUTION PANEL	STR	MOTOR STARTER
CKP	FLAPPER SWING CHECK VALVE	MIX	MIXER, SUBMERSIBLE	SUG	SLUICE GATE
CKS	SWING CHECK VALVE	MP	METERING PUMP	TBM	TURBIDIMETER
CKV	SILENT CHECK VALVE	MOH	MONORAIL HOIST	UHT	UNIT HEATER
CNV	CONVEYOR	MUV	MUD VALVE	VEM	VELOCITY METER
CPI	PLATINIZED NIOBIUM ANODE	ORT	ORP TRANSMITTER	VFD	VARIABLE FREQUENCY DRIVE
CPJ	REFERENCE ELECTRODE JUNCTION BOX	PCC	PLANT CONTROL CENTER	VRV	VACUUM REGULATING VALVE
CPR	CATHODIC PROTECTION RECTIFIER	PCP	PROGRESSIVE CAVITY PUMP	WCL	WHEELCHAIR LIFT
CPS	ZINC ANODE	PDB	POSITIVE DISPLACEMENT BLOWER	WIN	WINCH
CTL	CONTROL PANEL	PDE	PUMP DIAPHRAGM ELECTRIC	WSF	WATER SOFTENER
DMP	DAMPER	PDISH	PRESSURE DIFFERENTIAL SWITCH	XFR	TRANSFORMER
DO	DISSOLVED OXYGEN PROBE	PDR	PULSATION DAMPENER	YS	LEAK SWITCH
DPR	DUCT DAMPER	PFE	POLYMER FEED	YST	WYE STRAINER

FLOW DESIGNATIONS

A	AIR
AL	ALUM
BW	BACKWASH WATER
BYP	BYPASS
CAR	CARBON SOURCE
CH	CHEMICAL
CW	INDUSTRIAL COLD WATER
D	DRAIN
E	ELECTRICAL
EFF	EFFLUENT
ESW	SPRAY WATER
FA	FOUL AIR
FM	FORCE MAIN
FO	FIBER OPTIC
FW	FIRE WATER
HW	HOT WATER
IA	INSTRUMENT AIR
IPSBP	IPS BYPASS
IRR	IRRIGATION
MLR	MIXED LIQUOR RETURN
NPW	NONPOTABLE WATER
OCL	CHLORINE GAS
PM	MEMBRANE PERMEATE WATER
POL	POLYMER
POT	POTABLE WATER
RAS	RETURN ACTIVATED SLUDGE
RW	RECLAIMED WATER
S	SLUDGE
SCM	SCUM
SD	STORM DRAIN
SE	SECONDARY EFFLUENT
SLM	SAMPLE LINE
SS	SANITARY SEWER
SW	SURFACE WATER
TD	TANK DRAIN
WW	WASTEWATER

PIPE MATERIAL DESIGNATIONS

ACP	ASBESTOS CEMENT PIPE
CCP	CONCRETE CYLINDER PIPE
COP	COPPER PIPE
CPVC	CHLORINATED POLYVINYL CHLORIDE PIPE
DIP	DUCTILE IRON PIPE
FRP	FIBERGLASS REINFORCED PLASTIC PIPE
GDIP	GLASSLINED DUCTILE IRON PIPE
GST	GALVANIZED STEEL
HDPE	HIGH DENSITY POLYETHYLENE PIPE
HPVC	POLYVINYL CHLORIDE HOSE
PCCP	PRESTRESSED CONCRETE CYLINDER PIPE
PVC	POLYVINYL CHLORIDE PIPE
RCP	REINFORCED CONCRETE PIPE
RCCP	REINFORCED CONCRETE CYLINDER PIPE
RGRCP	RUBBER GASKET REINFORCED CONCRETE PIPE
SST	STAINLESS STEEL PIPE, 316H
STL	STEEL
VCP	VITRIFIED CLAY PIPE

EQUIPMENT TAG NUMBER DESIGNATIONS

XXXX-000-XXX

- DEVICE IDENTIFIER (SEE THIS SHEET)
- UNIQUE DEVICE NUMBER
- PROCESS EQUIPMENT CODE (SEE THIS SHEET)

XXXX-000-XXX EXISTING EQUIPMENT

XXXX-000-XXX NEW EQUIPMENT

PIPE NUMBERING DESIGNATIONS

XX-000-XXXX

- PIPE MATERIAL (SEE THIS SHEET)
- PIPE IDENTIFIER (INCHES)
- FLOW DESIGNATION (SEE THIS SHEET)

XX-000-XXXX EXISTING PIPE

XX-000-XXXX PROPOSED PIPE

KEYED NOTE DESIGNATIONS

- X — CONSTRUCTION NOTE
- X — DEMOLITION EQUIPMENT NUMBER
- X — EQUIPMENT NUMBER

WILSON ENGINEERS
1620 West Fountainhead Pkwy
Suite 501
Tempe, Arizona 85282
Phone: (480) 893-8860
Improving Arizona's Infrastructure Since 1942

CITY OF CHANDLER
RECLAIMED WATER INTERCONNECT FACILITY

PROCESS AND SITE LEGEND

CITY PROJECT NO. WW1901.203
WILSON PROJECT NO. 21007

Design: SZ	Drawn: JMJ	Checked: SR
Date: 02/2022	Wilson Project No.: 21007	

Rev#	Date	Description	By

VERIFY SCALES
BAR IS ONE INCH ON ORIGINAL DRAWING
0 1"
IF NOT ONE INCH ON THIS SHEET, ADJUST SCALES ACCORDINGLY

Registered Professional Engineer — CERTIFICATE NO. 30185 — UDAY K. GANDHE — Date Signed 02/28/2022 — ARIZONA U. S. A.

Registered Professional Engineer — CERTIFICATE NO. 41008 — SREERAM RENGARAJ — Date Signed 02/28/2022 — ARIZONA U. S. A.

Sheet No. G-6

AGENCY REVIEW

XREFS: TB-WE-D; SEAL-UKG; SEAL-SR
G:\PROJECT\21007\CADD\DESIGN\GENERAL\21007G6.DWG, 2/25/2022 4:24:42 PM, acantella, 1:2.1887

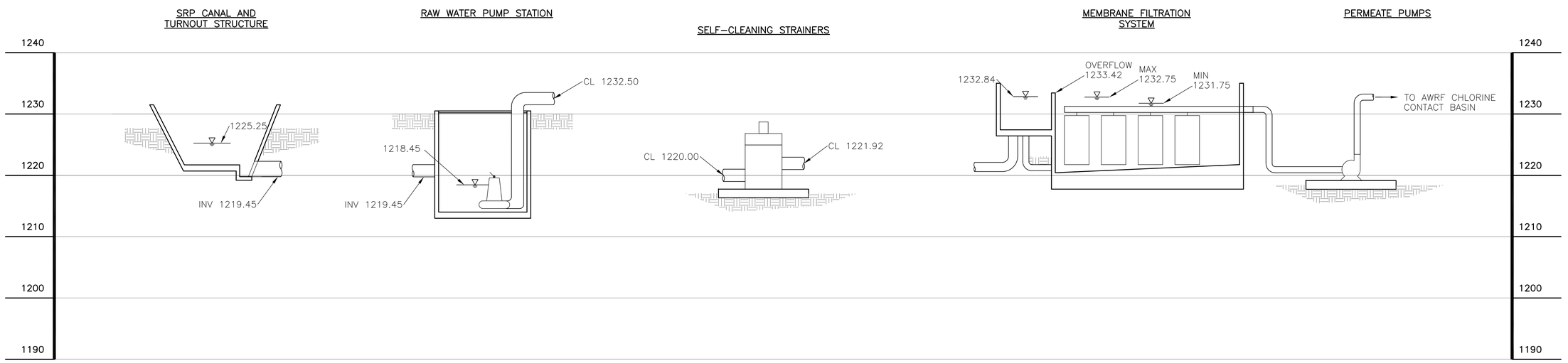

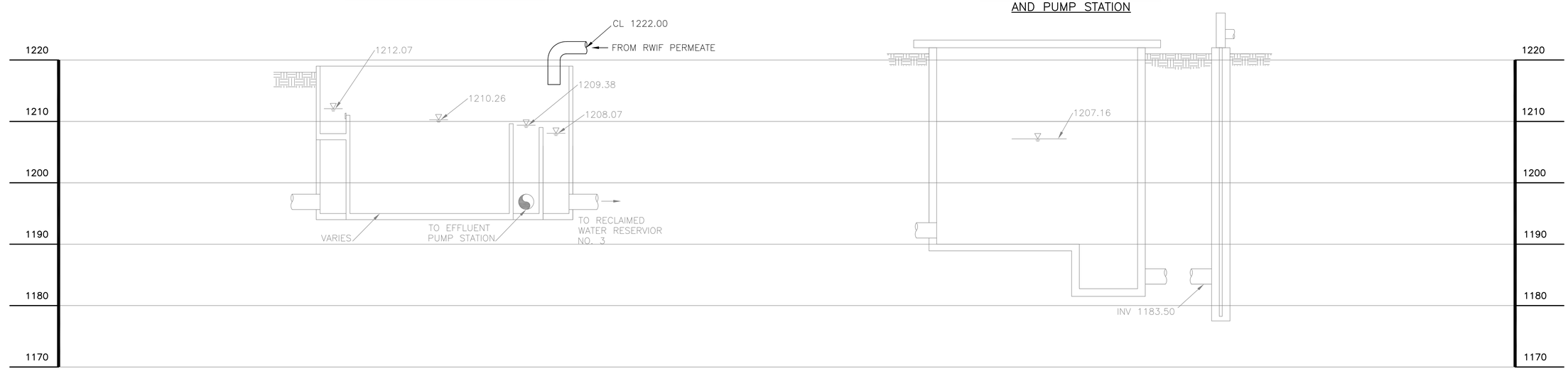

NOTE:

1. PROFILE IS BASED ON RWIF PEAK FLOW OF 12.5 MGD AND AWRF PEAK FLOW OF 33 MGD

1620 West Fountainhead Pkwy
Suite 501
Tempe, Arizona 85282
Phone: (480) 893-8860

Improving Arizona's Infrastructure Since 1942

WILSON ENGINEERS

CITY OF CHANDLER
RECLAIMED WATER INTERCONNECT FACILITY

RWIF HYDRAULIC PROFILE

CITY PROJECT NO. WW1901.203
WILSON PROJECT NO. 21007

Rev#	Date	Description	By

Design: SZ
Date: 02/2022
Drawn: JMJ
Wilson Project No.: 21007
Checked: SR

VERIFY SCALES
BAR IS ONE INCH ON ORIGINAL DRAWING
0 1"
IF NOT ONE INCH ON THIS SHEET, ADJUST SCALES ACCORDINGLY

Registered Professional Engineer
CERTIFICATE NO.
30185
UDAY K. GANDHE
Date Signed 02/28/2022
ARIZONA U. S. A.

Registered Professional Engineer
CERTIFICATE NO.
41008
SREERAM RENGARAJ
Date Signed 02/28/2022
ARIZONA U. S. A.

Sheet No. G-9

XREFS: TB-WE-D; SEAL-UKG; SEAL-SR

G:\PROJECT\21007\CADD\DESIGN\GENERAL\21007G9.DWG, 2/25/2022 4:25:34 PM, acantella, 1:2.1887

AGENCY REVIEW

CITRIC ACID STORAGE FACILITY

SODIUM HYPOCHLORITE STORAGE FACILITY

SULFURIC ACID STORAGE FACILITY

CAUSTIC STORAGE FACILITY

SODIUM BISULFITE STORAGE FACILITY

CLEAN IN PLACE TANK

BULK SODIUM HYPOCHLORITE FEED FACILITY

ACH STORAGE FACILITY

FROM SRP CANAL

SRP CANAL TURNOUT STRUCTURE

RAW WATER PUMP STATION

SELF-CLEANING STRAINERS

MEMBRANE FILTRATION SYSTEM

BACKPULSE TANK

BLOWER BUILDING

FROM AIRPORT WATER RECLAIMATION FACILITY

AWRF CHLORINE CONTACT BASINS

TO EXISTING AWRF RESERVOIRS 3 & 4

TO AWRF PLANT SEWER

LEGEND:

A	AIR
ACH	ALUMINUM CHLOROHYDRATE
BW	BACKPULSE WATER
CA	CITRIC ACID
CAS	SODIUM HYDROXIDE
CIP	CLEAN IN PLACE
D	DRAIN
EFF	EFFLUENT
PM	MEMBRANE PERMEATE
RW	RECLAIMED WATER
SA	SULFURIC ACID
SBS	SODIUM BISULFITE
SHY	SODIUM HYPOCHLORITE
SW	SURFACE WATER

WILSON ENGINEERS
1620 West Fountainhead Pkwy
Suite 501 85282
Tempe, Arizona
Phone: (480) 893-8860
Improving Arizona's Infrastructure Since 1942

CITY OF CHANDLER
RECLAIMED WATER INTERCONNECT FACILITY

RWIF PROCESS SCHEMATIC

CITY PROJECT NO. WW1901.203
WILSON PROJECT NO. 21007

Design: KP	Drawn: JMJ	Checked: SR
Date: 02/2022	Wilson Project No.: 21007	

Rev#	Date	Description	By

VERIFY SCALES
BAR IS ONE INCH ON ORIGINAL DRAWING
0 1"
IF NOT ONE INCH ON THIS SHEET, ADJUST SCALES ACCORDINGLY

Registered Professional Engineer
CERTIFICATE NO.
30185
UDAY K. GANDHE
Date Signed 02/28/2022
ARIZONA U. S. A.

Registered Professional Engineer
CERTIFICATE NO.
41008
SREERAM RENGARAJ
Date Signed 02/28/2022
ARIZONA U. S. A.

Sheet No. G-10

AGENCY REVIEW

XREFS: TB-WE-D; SEAL-UKG; SEAL-SR

G:\PROJECT\21007\CADD\DESIGN\GENERAL\21007G10.DWG, 2/25/2022 2:17:26 PM, acantella, 1:2.1887

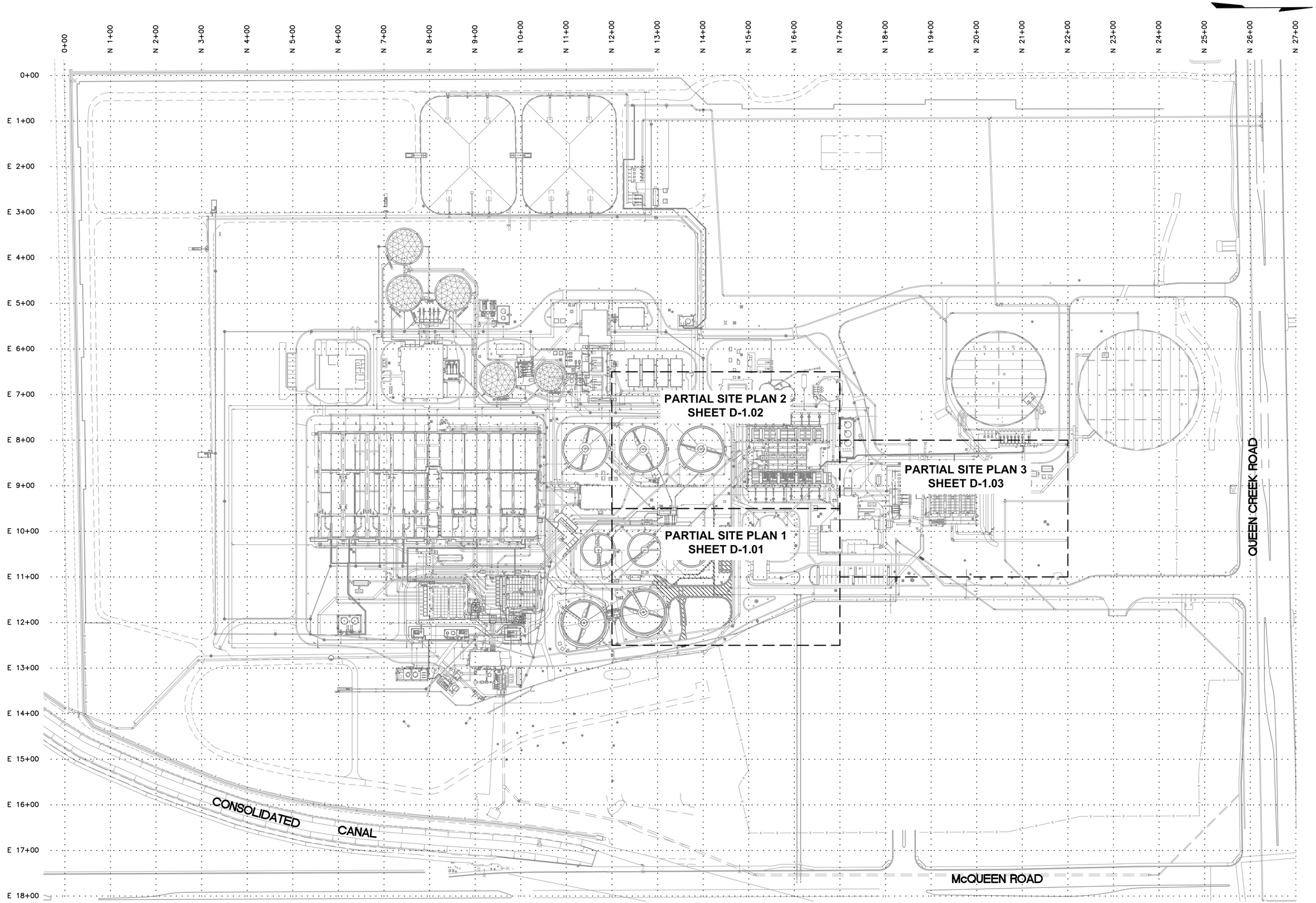

SITE PLAN
SCALE = 1"=100'

0 50 100 200
1" = 100'

XREFS: TB-WE-D; XC-YARD PIPING; XC-SITE; C-GRID; SEAL-UKG; SEAL-SR

G:\PROJECT\21007\CADD\DESIGN\DEMO\21007D1.00.DWG, 2/25/2022 2:08:16 PM, acantella, 1:2.1887

AGENCY REVIEW

WILSON ENGINEERS
1620 West Fountainhead Pkwy
Suite 501
Tempe, Arizona 85282
Phone: (480) 893-8860
Improving Arizona's Infrastructure Since 1942

CITY OF CHANDLER
RECLAIMED WATER INTERCONNECT FACILITY

RWIF OVERALL DEMOLITION PLAN

CITY PROJECT NO. WW1901.203
WILSON PROJECT NO. 21007

Design: KP	Drawn: JMJ	Checked: SR
Date: 02/2022	Wilson Project No.: 21007	

Rev#	Date	Description	By

VERIFY SCALES
BAR IS ONE INCH ON ORIGINAL DRAWING
0 1"
IF NOT ONE INCH ON THIS SHEET, ADJUST SCALES ACCORDINGLY

Professional Engineer
CERTIFICATE NO.
30185
UDAY K. GANDHE
Date Signed 02/28/22
ARIZONA U. S. A.

Professional Engineer
CERTIFICATE NO.
41008
SREERAM RENGARAJ
Date Signed 02/28/22
ARIZONA U. S. A.

Sheet No.D-1.00

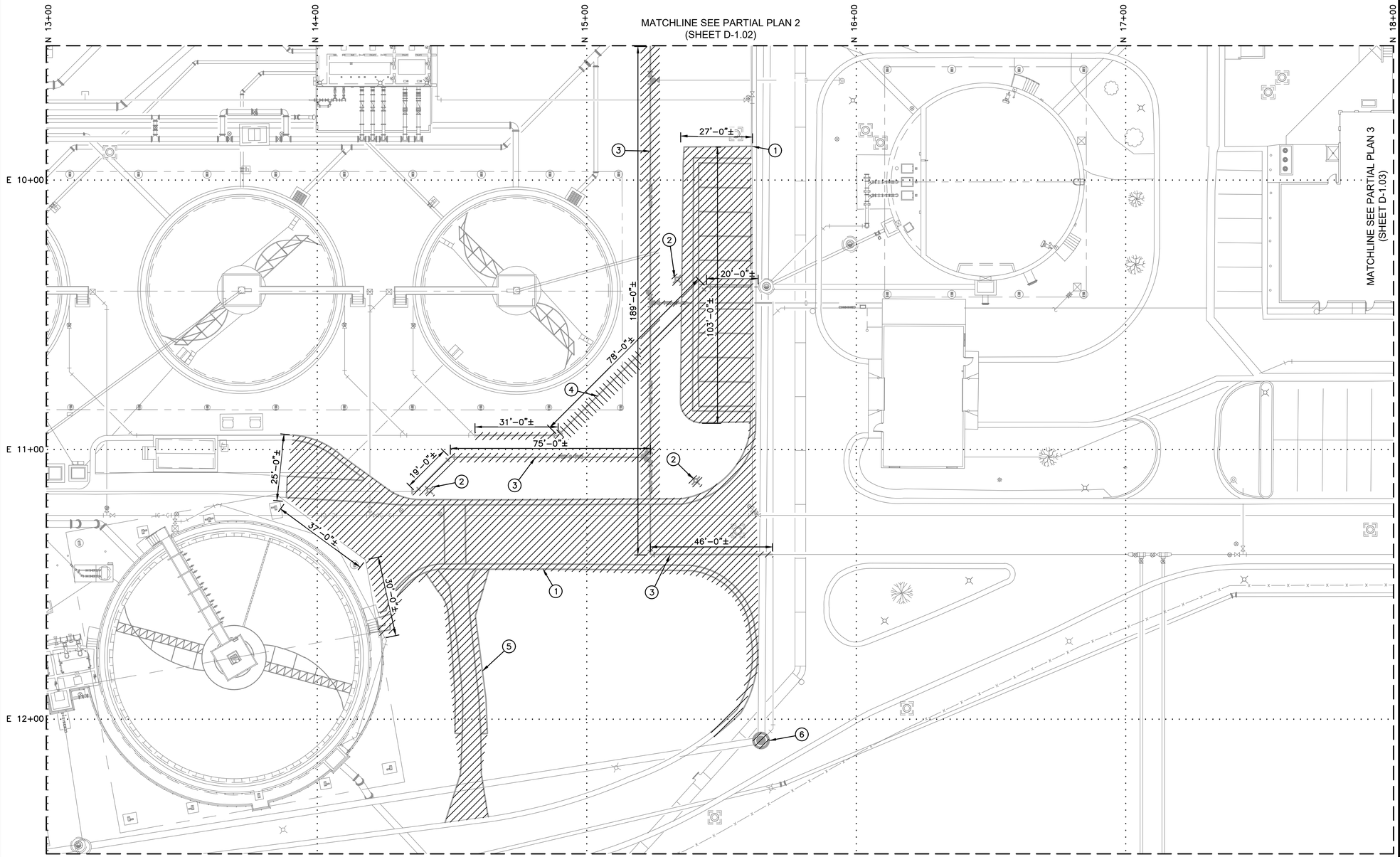

SITE PLAN
SCALE = 1"=20'

0 10 20 40
1" = 20'

KEYED NOTES

1. REMOVE ASPHALT AND CURB TO EXTENTS SHOWN
2. RELOCATE LIGHTPOLE (TYP), SEE ELECTRICAL SHEETS FOR DETAILS
3. REMOVE AND RELOCATE 8" DIA PVC POTABLE WATER PIPE AND GATE VALVES TO EXTENT SHOWN
4. REMOVE AND RELOCATE 2" DIA PVC DRAIN PIPE TO EXTENT SHOWN
5. REMOVE VALLEY GUTTER
6. REMOVE MANHOLE

DEMOLITION NOTES:

1. CONTRACTOR SHALL FIELD VERIFY DIMENSIONS AND LOCATIONS OF EXISTING PIPE, ELECTRICAL AND STRUCTURES PRIOR TO DEMOLITION.
2. DEMOLITION OF OTHER UTILITIES, PIPING AND STRUCTURES MAY BE SHOWN ON YARD PIPING AND PROCESS PLANS.
3. ITEMS INDICATED AS BEING "REMOVED" SHALL BE REMOVED FROM EXISTING CONSTRUCTION AND THE SITE AS THE WORK PROGRESSES.
4. ITEMS INDICATED AS BEING "RELOCATED" SHALL BE MOVED, CLEANED, STORED AS REQUIRED AND REINSTALLED WHERE INDICATED OR AS DIRECTED BY THE ENGINEER.
5. ITEMS INDICATED AS BEING "SALVAGED" SHALL BE MOVED, CLEANED AND DELIVERED TO OWNER ON SITE TO LOCATION AS DIRECTED BY ENGINEER. IF THERE IS DAMAGE, WHERE DAMAGE IS BEYOND REPAIR, ITEM SHALL BE REPLACED AT CONTRACTOR EXPENSE.
6. CARE SHALL BE EXERCISED TO ENSURE THAT DAMAGE TO ITEMS TO REMAIN, TO BE RELOCATED, OR TO BE SALVAGED, IS MINIMIZED. CONTRACTOR SHALL PATCH OR REFINISH TO MATCH ADJACENT LIKE MATERIAL WHERE THERE IS DAMAGE, WHERE DAMAGE IS BEYOND REPAIR, ITEMS SHALL BE REPLACED AT CONTRACTORS EXPENSE.
7. ALL ELECTRICAL CONDUITS, DUCTBACKS AND LIGHT POLES SHOWN ARE SCHEMATIC. ACTUAL LOCATIONS MAY VARY.
8. CONTRACTOR SHALL COORDINATE WITH ENGINEER FOR DEMOLITION SCHEDULING AND APPROACH WITH THE GOAL TO KEEP THE PLANT OPERATIONAL AT ALL TIMES.

WILSON ENGINEERS
1620 West Fountainhead Pkwy
Suite 501
Tempe, Arizona 85282
Phone: (480) 893-8860
Improving Arizona's Infrastructure Since 1942

CITY OF CHANDLER
RECLAIMED WATER INTERCONNECT FACILITY

RWIF PARTIAL DEMOLITION PLAN – 1

CITY PROJECT NO. WW1901.203
WILSON PROJECT NO. 21007

Design: KP	Drawn: JMJ	Checked: SR
Date: 02/2022	Wilson Project No.: 21007	

Rev#	Date	Description	By

VERIFY SCALES
BAR IS ONE INCH ON ORIGINAL DRAWING
0 1"
IF NOT ONE INCH ON THIS SHEET, ADJUST SCALES ACCORDINGLY

Professional Engineer
CERTIFICATE NO.
30185
UDAY K. GANDHE
Not Valid Without Signature
ARIZONA U. S. A.

Professional Engineer
CERTIFICATE NO.
41080
SRIRAM RENGIRAJ
Not Valid Without Signature
ARIZONA U. S. A.

Sheet No. D–1.01

AGENCY REVIEW

XREFS: XC-SITE; TB-WE-D; XC-YARD PIPING; C-GRID; SEAL-LIKG; SEAL-SR

G:\PROJECT\21007\CADD\DESIGN\DEMO\21007D1.01.DWG, 2/25/2022 5:58:46 PM, slorentzen, 1:2.1887

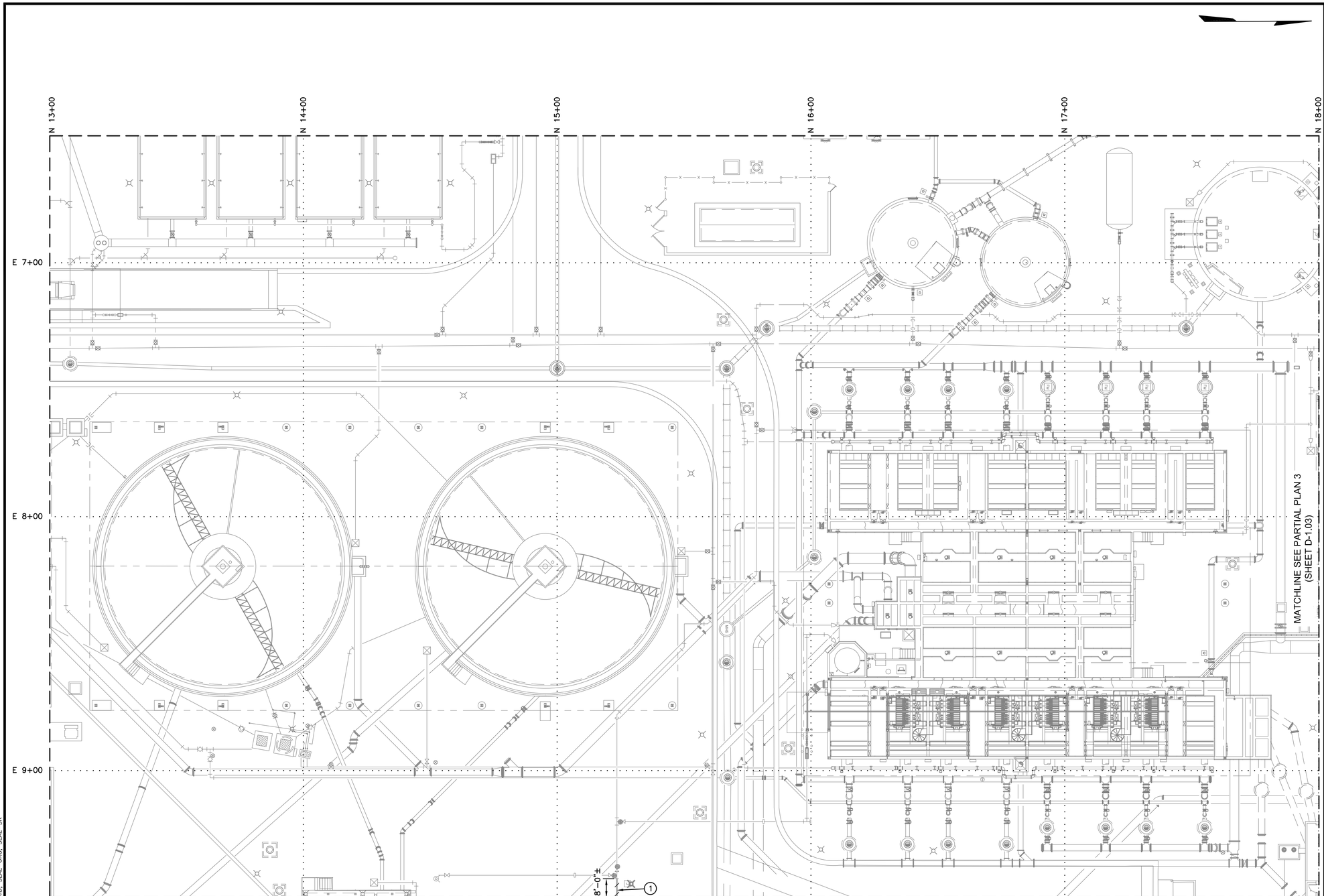

SITE PLAN
SCALE = 1"=20'

0 10 20 40
1" = 20'

KEYED NOTES

1. REMOVE 8" DIA PVC POTABLE WATER PIPE TO EXTENT SHOWN

DEMOLITION NOTES:

1. CONTRACTOR SHALL FIELD VERIFY DIMENSIONS AND LOCATIONS OF EXISTING PIPE, ELECTRICAL AND STRUCTURES PRIOR TO DEMOLITION.
2. DEMOLITION OF OTHER UTILITIES, PIPING AND STRUCTURES MAY BE SHOWN ON YARD PIPING AND PROCESS PLANS.
3. ITEMS INDICATED AS BEING "REMOVED" SHALL BE REMOVED FROM EXISTING CONSTRUCTION AND THE SITE AS THE WORK PROGRESSES.
4. ITEMS INDICATED AS BEING "RELOCATED" SHALL BE MOVED, CLEANED, STORED AS REQUIRED AND REINSTALLED WHERE INDICATED OR AS DIRECTED BY THE ENGINEER.
5. ITEMS INDICATED AS BEING "SALVAGED" SHALL BE MOVED, CLEANED AND DELIVERED TO OWNER ON SITE TO LOCATION AS DIRECTED BY ENGINEER. IF THERE IS DAMAGE, WHERE DAMAGE IS BEYOND REPAIR, ITEM SHALL BE REPLACED AT CONTRACTOR EXPENSE.
6. CARE SHALL BE EXERCISED TO ENSURE THAT DAMAGE TO ITEMS TO REMAIN, TO BE RELOCATED, OR TO BE SALVAGED, IS MINIMIZED. CONTRACTOR SHALL PATCH OR REFINISH TO MATCH ADJACENT LIKE MATERIAL WHERE THERE IS DAMAGE, WHERE DAMAGE IS BEYOND REPAIR, ITEMS SHALL BE REPLACED AT CONTRACTORS EXPENSE.
7. ALL ELECTRICAL CONDUITS, DUCTBACKS AND LIGHT POLES SHOWN ARE SCHEMATIC. ACTUAL LOCATIONS MAY VARY.
8. CONTRACTOR SHALL COORDINATE WITH ENGINEER FOR DEMOLITION SCHEDULING AND APPROACH WITH THE GOAL TO KEEP THE PLANT OPERATIONAL AT ALL TIMES.

WILSON ENGINEERS
1620 West Fountainhead Pkwy
Suite 501
Tempe, Arizona 85282
Phone: (480) 893-8860
Improving Arizona's Infrastructure Since 1942

CITY OF CHANDLER
RECLAIMED WATER INTERCONNECT FACILITY

RWIF PARTIAL DEMOLITION PLAN – 2

CITY PROJECT NO. WW1901.203
WILSON PROJECT NO. 21007

Design: KP	Drawn: JMJ	Checked: SR
Date: 02/2022	Wilson Project No.: 21007	

Rev#	Date	Description	By

VERIFY SCALES
BAR IS ONE INCH ON ORIGINAL DRAWING
0 1"
IF NOT ONE INCH ON THIS SHEET, ADJUST SCALES ACCORDINGLY

Professional Engineer CERTIFICATE NO. 30185 UDAY K. GANDHE Date Signed 02/28/2022 ARIZONA U. S. A.

Professional Engineer CERTIFICATE NO. 41008 SREERAM RENGARAJ Date Signed 02/28/2022 ARIZONA U. S. A.

Sheet No. D–1.02

XREFS: XC–SITE; TB–WE–D; XC–YARD PIPING; C–GRID; SEAL–UKG; SEAL–SR

G:\PROJECT\21007\CADD\DESIGN\DEMO\21007D1.02.DWG, 2/25/2022 2:11:34 PM, acantella, 1:2.1887

AGENCY REVIEW

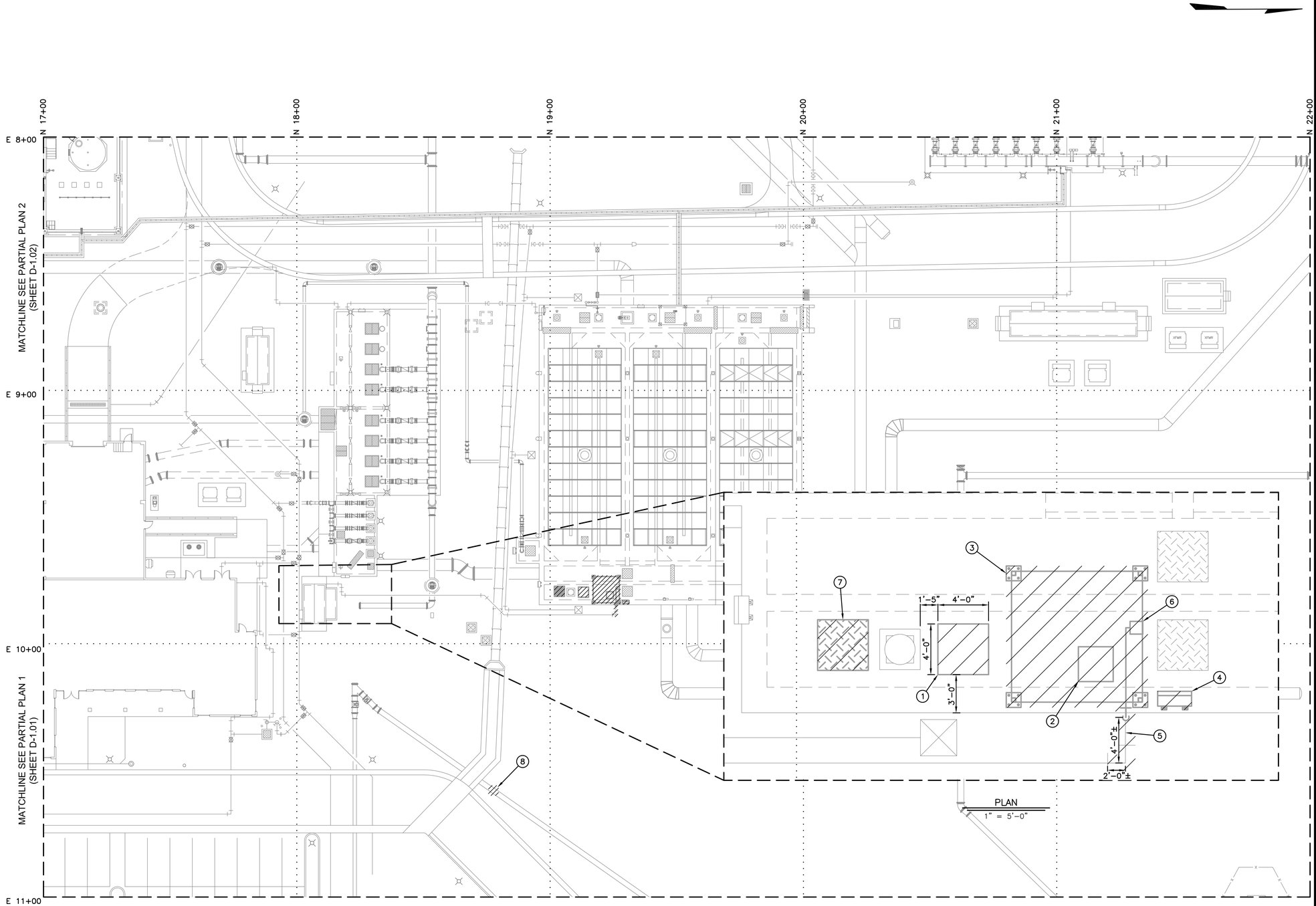

SITE PLAN
SCALE = 1"=20'

PLAN
1" = 5'-0"

0 10 20 40
1" = 20'

KEYED NOTES

1. CORE DRILL AND SAW CUT PER STRUCTURAL SHEETS FOR INSTALLATION OF 4'-0" X 4'-0" ACCESS HATCH
2. COMPOSITE SAMPLER TO BE RELOCATED FROM EXISTING LOCATION, SEE MECHANICAL SHEETS FOR DETAILS
3. REMOVE CANOPY
4. CHLORINE ANALYZER SAMPLE PUMP CONTROL PANEL TO BE RELOCATED FROM EXISTING LOCATION, SEE MECHANICAL SHEETS FOR DETAILS
5. REMOVE SECTION OF 1" DIA PVC LINE AS SHOWN
6. CHLORINE ANALYZER SAMPLE PUMP TO BE RELOCATED FROM EXISTING LOCATION, SEE MECHANICAL SHEETS FOR DETAILS
7. REMOVE 4'-0" X 4'-0" ACCESS HATCH
8. RELOCATE 24" DIA. EFFLUENT PIPE AS NEEDED

DEMOLITION NOTES:

1. CONTRACTOR SHALL FIELD VERIFY DIMENSIONS AND LOCATIONS OF EXISTING PIPE, ELECTRICAL AND STRUCTURES PRIOR TO DEMOLITION.
2. DEMOLITION OF OTHER UTILITIES, PIPING AND STRUCTURES MAY BE SHOWN ON YARD PIPING AND PROCESS PLANS.
3. ITEMS INDICATED AS BEING "REMOVED" SHALL BE REMOVED FROM EXISTING CONSTRUCTION AND THE SITE AS THE WORK PROGRESSES.
4. ITEMS INDICATED AS BEING "RELOCATED" SHALL BE MOVED, CLEANED, STORED AS REQUIRED AND REINSTALLED WHERE INDICATED OR AS DIRECTED BY THE ENGINEER.
5. ITEMS INDICATED AS BEING "SALVAGED" SHALL BE MOVED, CLEANED AND DELIVERED TO OWNER ON SITE TO LOCATION AS DIRECTED BY ENGINEER. IF THERE IS DAMAGE, WHERE DAMAGE IS BEYOND REPAIR, ITEM SHALL BE REPLACED AT CONTRACTOR EXPENSE.
6. CARE SHALL BE EXERCISED TO ENSURE THAT DAMAGE TO ITEMS TO REMAIN, TO BE RELOCATED, OR TO BE SALVAGED, IS MINIMIZED. CONTRACTOR SHALL PATCH OR REFINISH TO MATCH ADJACENT LIKE MATERIAL WHERE THERE IS DAMAGE, WHERE DAMAGE IS BEYOND REPAIR, ITEMS SHALL BE REPLACED AT CONTRACTORS EXPENSE.
7. ALL ELECTRICAL CONDUITS, DUCTBACKS AND LIGHT POLES SHOWN ARE SCHEMATIC. ACTUAL LOCATIONS MAY VARY.
8. CONTRACTOR SHALL COORDINATE WITH ENGINEER FOR DEMOLITION SCHEDULING AND APPROACH WITH THE GOAL TO KEEP THE PLANT OPERATIONAL AT ALL TIMES.

WILSON ENGINEERS
1620 West Fountainhead Pkwy
Suite 501 85282
Tempe, Arizona
Phone: (480) 893-8860
Improving Arizona's Infrastructure Since 1942

CITY OF CHANDLER
RECLAIMED WATER INTERCONNECT FACILITY

RWIF PARTIAL DEMOLITION PLAN – 3

CITY PROJECT NO. WW1901.203
WILSON PROJECT NO. 21007

Design: KP	Drawn: JMJ	Checked: SR
Date: 02/2022	Wilson Project No.: 21007	

Rev#	Date	Description	By

VERIFY SCALES
BAR IS ONE INCH ON ORIGINAL DRAWING
0 1"
IF NOT ONE INCH ON THIS SHEET, ADJUST SCALES ACCORDINGLY

Professional Engineer Certificate No. 30185 UDAY K. GANDHE Date Signed 02/28/2022 ARIZONA U. S. A.

Professional Engineer Certificate No. 41008 SREERAM RENGARAJ Date Signed 02/28/2022 ARIZONA U. S. A.

Sheet No. D–1.03

AGENCY REVIEW

XREFS: XC-SITE; TB-WE-D; XC-YARD PIPING; C-GRID; SEAL-UKG; SEAL-SR

G:\PROJECT\21007\CADD\DESIGN\DEMO\21007D1.03.DWG, 2/25/2022 4:26:07 PM, acantella, 1:2.19

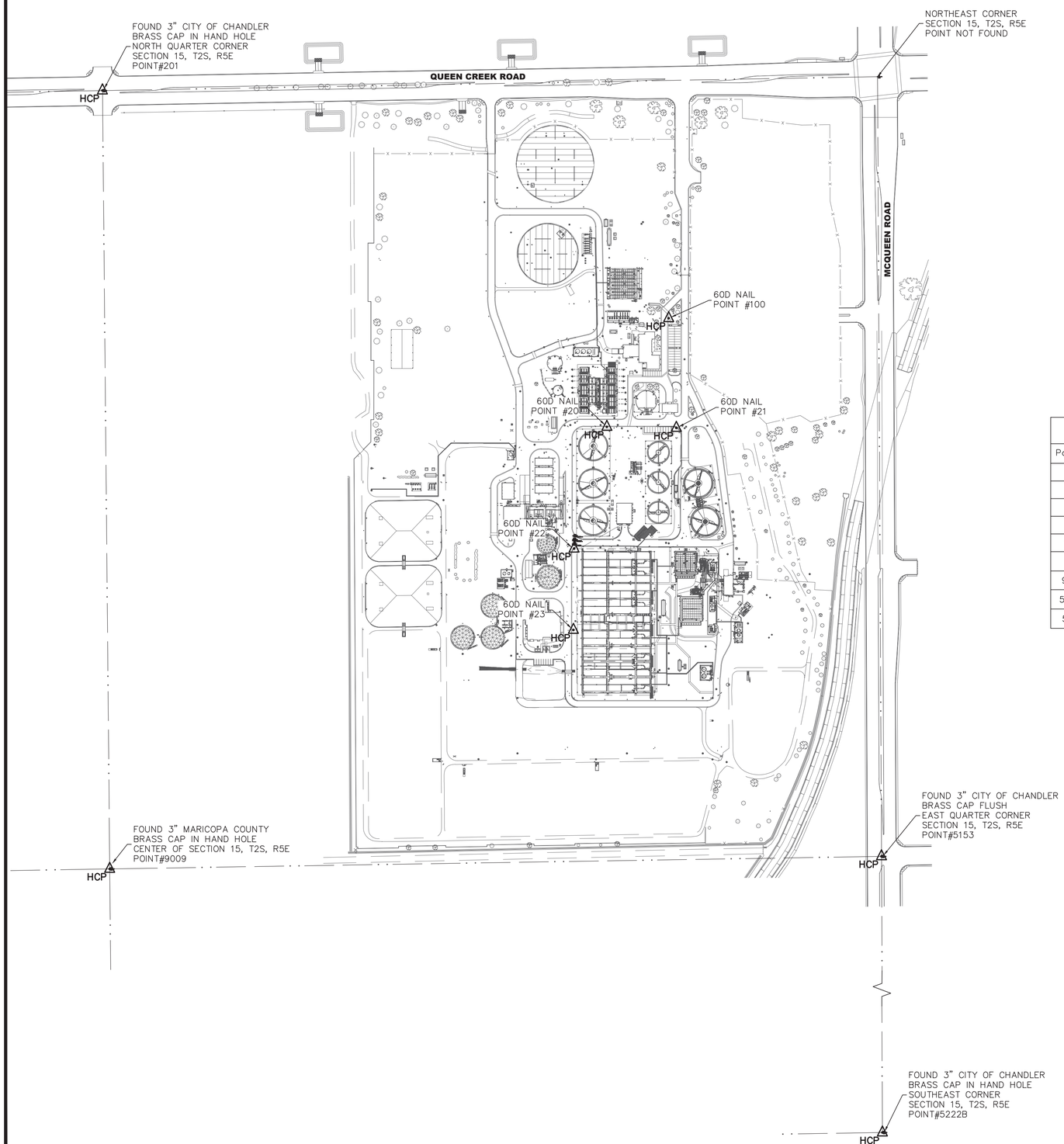

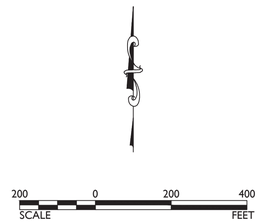

HORIZONTAL CONTROL TABLE				
Point #	Northing	Easting	Elevation(NGVD'29)	Description
20	821942.21	727479.03	1220.36	SN 60D
21	821938.66	727715.25	1220.06	SN 60D
22	821528.27	727367.56	1225.68	SN 60D
23	821251.77	727365.10	1224.98	SN 60D
100	822311.72	727689.27	1215.14	SPIKE
201	823086.26	725763.24	1218.43	BCH 3" COC .5 DN QUEEN CREEK RLS 33515 2009
9009	820439.00	725787.91	1221.58	BCH 3" MC DOT RLS 48362 2016
5122B	817835.20	728426.46	1228.01	BCH 3" MCQUEEN+OCOTILLO
5153	820481.71	728413.14	1226.23	BCF 3" COC MCQUEEN+APPLEBY

CONTROL

BENCHMARK #43A

SECTION 9, T2S, R5E, 3" BRASS CAP IN CONCRETE, 100' NORTH, 70' WEST OF INTERSECTION OF ARIZONA AVE AND QUEEN CREEK RD; ON ROADSIDE BY SRP STRUCTURE.
(NORTHING 823148.607, EASTING 723063.962)
ELEVATION = 1213.88 (NGVD29)

VERTICAL DATUM

SURVEY BASED ON NGVD 29 ELEVATIONS (CITY OF CHANDLER DATUM PRIOR TO JULY 2011). TO CONVERT TO NAVD 88 (CITY OF CHANDLER DATUM AS OF JULY 2011) A VALUE OF 1.693 FEET IS ADDED TO THE NGVD 29 ELEVATIONS.

HORIZONTAL DATUM:

THE DATUM IS "CITY OF CHANDLER", REVISED AUGUST 2007 AND PUBLISHED. THE "CITY DATUM" IS BASED ON NAD83, ARIZONA STATE PLANE, CENTRAL ZONE ADJUSTED FROM GRID TO GROUND. AVERAGE COMBINED SCALE FACTOR BEING 0.9998472125, AS DOCUMENTED IN CITY OF CHANDLER RECORDS.

GROUND DISTANCES
INTENTIONAL FEET

1620 West Fountainhead Pkwy
Suite 501
Tempe, Arizona 85282
Phone: (480) 893-8860
Improving Arizona's
Infrastructure Since 1942

WILSON ENGINEERS

CITY OF CHANDLER
RECLAIMED WATER INTERCONNECT FACILITY

AWRF SURVEY CONTROL SHEET

CITY PROJECT NO. WW1901.203
WILSON PROJECT NO. 21007

Design: Date: 02/2022
Drawn: Wilson Project No.: 21007
Checked:

Revision	Date	Description	By

VERIFY SCALES
BAR IS ONE INCH ON ORIGINAL DRAWING
0 1"
IF NOT ONE INCH ON THIS SHEET, ADJUST SCALES ACCORDINGLY

REGISTERED LAND SURVEYOR
CERTIFICATE NO.
60897
JARED
HANSMANN
2-9-22
DATE SIGNED
ARIZONA U.S.A.

Sheet No. C-1.0

SCREEN

C:\RICK\PROJECTS\P_SIG_H\P5279_OWRF\DWG\MAPPING\P5279 AWRF CONTROL SHEET.DWG, 2/7/2022 1:02:36 PM, jhansmann, 1:1

AGENCY REVIEW

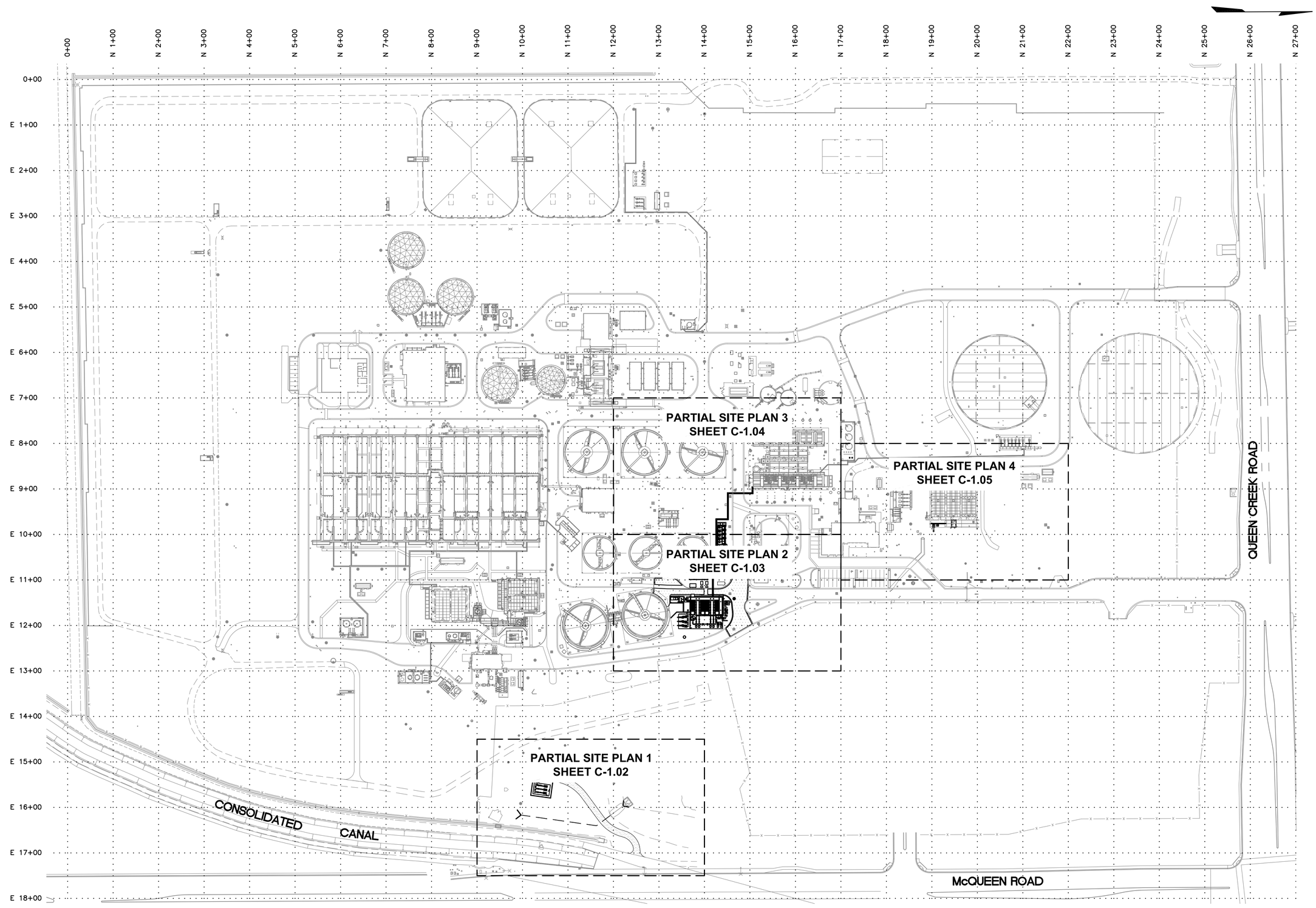

SITE PLAN
SCALE = 1"=100'

0 50 100 200
1" = 100'

AGENCY REVIEW

WILSON ENGINEERS
1620 West Fountainhead Pkwy
Suite 301
Tempe, Arizona 85282
Phone: (480) 893-8860
Improving Arizona's Infrastructure Since 1942

CITY OF CHANDLER
RECLAIMED WATER INTERCONNECT FACILITY

RWIF OVERALL SITE PLAN

CITY PROJECT NO. WW1901.203
WILSON PROJECT NO. 21007

Design: KP	Drawn: JMJ	Checked: SR
Date: 02/2022	Wilson Project No.: 21007	

Rev#	Date	Description	By

VERIFY SCALES
BAR IS ONE INCH ON ORIGINAL DRAWING
0 1"
IF NOT ONE INCH ON THIS SHEET, ADJUST SCALES ACCORDINGLY

Professional Engineer — Certificate No. 30185 — UDAY K. GANDHE — Date Signed 02/28/2022 — Arizona U.S.A.

Professional Engineer — Certificate No. 41008 — SREERAM RENGARAJ — Date Signed 02/28/2022 — Arizona U.S.A.

Sheet No. C-1.01

XREFS: TB-WE-D; C-SITE; CP-ROAD; XC-SITE; C-GRID; SEAL-UKG; SEAL-SR

G:\PROJECT\21007\CADD\DESIGN\CIVIL\21007C1.01.DWG, 2/25/2022 2:38:11 PM, zveli, 1:2.1887

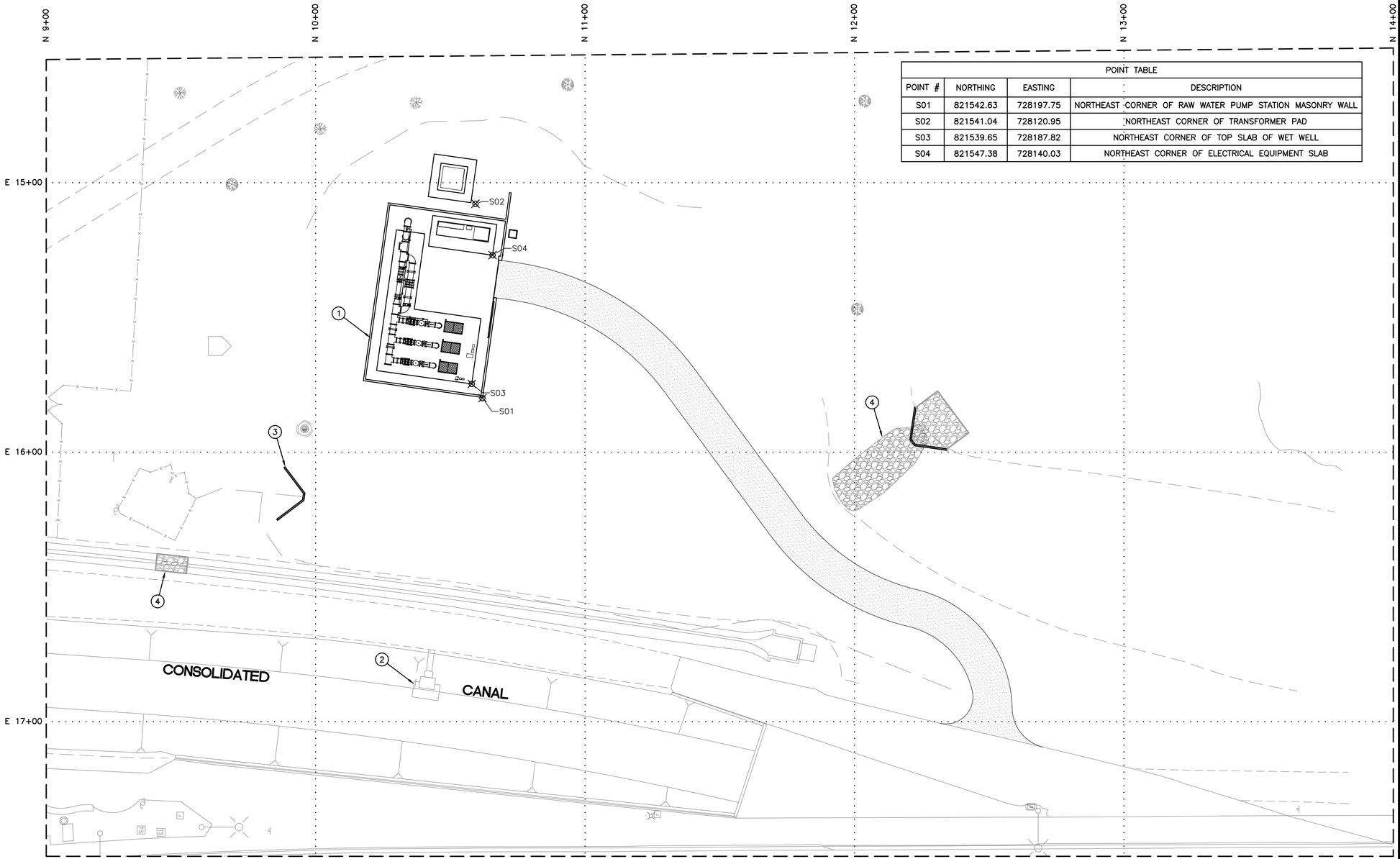

SITE PLAN
SCALE = 1"=20'

POINT TABLE			
POINT #	NORTHING	EASTING	DESCRIPTION
S01	821542.63	728197.75	NORTHEAST CORNER OF RAW WATER PUMP STATION MASONRY WALL
S02	821541.04	728120.95	NORTHEAST CORNER OF TRANSFORMER PAD
S03	821539.65	728187.82	NORTHEAST CORNER OF TOP SLAB OF WET WELL
S04	821547.38	728140.03	NORTHEAST CORNER OF ELECTRICAL EQUIPMENT SLAB

NOTE:

1. SHADE CANOPIES NOT SHOWN FOR CLARITY.

0 10 20 40
1" = 20'

KEYED NOTES

1. RAW WATER PUMP STATION, SEE SHEET M-1.03 FOR DETAILS
2. SRP CANAL TURNOUT STRUCTURE
3. HEADWALL (TYP), SEE SHEET C-1.42 FOR DETAILS
4. RIP-RAP (TYP), SEE SHEET C-1.42 FOR DETAILS

SURVEY NOTES:

1. LOCATIONS, ELEVATIONS AND DIMENSIONS OF EXISTING UTILITIES, STRUCTURES AND OTHER FEATURES ARE SHOWN ACCORDING TO THE BEST INFORMATION AVAILABLE AT THE TIME OF THE PREPARATION OF THESE PLANS, BUT DO NOT PURPORT TO BE ABSOLUTELY CORRECT AND ARE APPROXIMATE. THE CONTRACTOR SHALL BE RESPONSIBLE FOR VERIFYING LOCATIONS, ELEVATIONS AND DIMENSIONS OF ALL EXISTING UTILITIES, STRUCTURES AND OTHER FEATURES AFFECTING THE WORK AND AVOIDING DAMAGE TO SAME. LANDSCAPE IRRIGATION LINES ARE NOT SHOWN. THE CONTRACTOR SHALL BE RESPONSIBLE FOR REPAIRING ANY LANDSCAPE IRRIGATION LINES DAMAGES DURING CONSTRUCTION.
2. THE CONTRACTOR SHALL LOCATE OR HAVE LOCATED ALL EXISTING UNDERGROUND PIPELINES, TELEPHONE AND ELECTRIC CONDUITS, AND STRUCTURES IN ADVANCE OF CONSTRUCTION AND SHALL OBSERVE ALL POSSIBLE PRECAUTIONS TO AVOID DAMAGE TO SAME.
3. CONTRACTOR SHALL CONFIRM IN WRITING SURVEYED INFORMATION CLOSELY MATCHES THE DESIGN DOCUMENTS AND PROVIDE A SIGNED/SEALED SURVEY REPORT PRIOR TO START OF CONSTRUCTION. IF CONTRACTOR'S SURVEY DIFFERS FROM THE DESIGN DOCUMENTS, CONTRACTOR SHALL NOTIFY ENGINEER IN WRITING IMMEDIATELY PRIOR TO START OF CONSTRUCTION.

1620 West Fountainhead Pkwy
Suite 501
Tempe, Arizona 85282
Phone: (480) 893-8860
Improving Arizona's Infrastructure Since 1942
WILSON ENGINEERS

CITY OF CHANDLER
RECLAIMED WATER INTERCONNECT FACILITY

RWIF PARTIAL SITE PLAN – 1

CITY PROJECT NO. WW1901.203
WILSON PROJECT NO. 21007

Design: KP | Drawn: JMJ | Checked: SR
Date: 02/2022 | Wilson Project No.: 21007

Rev#	Date	Description	By

VERIFY SCALES
BAR IS ONE INCH ON ORIGINAL DRAWING
0 1"
IF NOT ONE INCH ON THIS SHEET, ADJUST SCALES ACCORDINGLY

Professional Engineer — CERTIFICATE NO. 30185 — UDAY K. GANDHE — Not Signed 02/28/2022 — ARIZONA U. S. A.

Professional Engineer — CERTIFICATE NO. 41008 — SREERAM RENGARAJ — Not Signed 02/28/2022 — ARIZONA U. S. A.

Sheet No. C–1.02

AGENCY REVIEW

XREFS: XC–SITE; TB–WE–D; C–SITE; XC–YARD PIPING; CP–ROAD; C–GRID; SEAL–UKG; SEAL–SR

G:\PROJECT\21007\CADD\DESIGN\CIVIL\21007C1.02.DWG, 2/25/2022 2:37:17 PM, zveli, 1:2.1887

POINT TABLE			
POINT #	NORTHING	EASTING	DESCRIPTION
S05	821921.65	727820.26	NORTHEAST CORNER OF MEMBRANE FILTRATION SYSTEM FACILITY
S06	821836.13	727749.60	NORTHWEST CORNER OF ACH CHEMICAL FACILITY
S07	821889.17	727702.23	NORTHWEST CORNER OF RWIF ELECTRICAL BUILDING
S08	821837.80	727838.55	SEWER MANHOLE NO. 63
S09	821947.02	727754.25	SEWER MANHOLE NO. 64
S10	821930.34	727664.43	NORTHWEST CORNER OF RWIF BLOWER BUILDING
S11	821929.22	727654.65	NORTHEAST CORNER OF MFS CHEMICAL FACILITY

N 12+00 N 13+00 N 14+00 N 15+00 N 16+00 N 17+00

E 10+00 E 11+00 E 12+00 E 13+00

MATCHLINE SEE PARTIAL PLAN 3 (SHEET C-1.04)

MATCHLINE SEE PARTIAL PLAN 4 (SHEET C-1.05)

S05 S06 S07 S08 S09 S10 S11

SITE PLAN
SCALE = 1"=20'

0 10 20 40
1" = 20'

NOTE:

1. SHADE CANOPIES NOT SHOWN FOR CLARITY.

KEYED NOTES

1. SELF-CLEANING STRAINERS FACILITY, SEE SHEET M-1.23 FOR DETAILS
2. MEMBRANE FILTRATION SYSTEM FACILITY, SEE SHEET M-1.43 FOR DETAILS
3. ACH FACILITY, SEE SHEET M-2.23 FOR DETAILS
4. ELECTRICAL BUILDING, SEE ELECTRICAL SHEETS FOR DETAILS
5. BLOWER BUILDING, SEE SHEET M-1.82 FOR DETAILS
6. MFS CHEMICAL FACILITY, SEE SHEET M-2.00 FOR DETAILS
7. MFS CHEMICAL FACILITY AND BULK SODIUM HYPOCHLORITE FEED FACILITY CHEMICAL PIPES SUPPORTED ON WEST AND NORTH WALLS OF MEMBRANE FILTRATION SYSTEM FACILITY, SEE DETAIL 203 SHEET M-7.02 FOR FLUSH MOUNT PIPE SUPPORT DETAIL
8. CHEMICAL CONTAINMENT TRENCH, SEE DETAIL 301 AND TRENCH CROSS SECTION A SHEET C-7.03
9. BOLLARD (TYP), SEE DETAIL 205 SHEET C-7.02
10. CHEMICAL CONTAINMENT TRENCH, SEE DETAIL 301 AND TRENCH CROSS SECTION B SHEET C-7.03
11. INLINE RAPID MIXER, SEE MECHANICAL SHEETS FOR DETAILS
12. JPCI SERVICES INC., SEWER SHIELD COMPOSITES LLC (EPOXY RESIN REINFORCED WITH FIBERGLASS)

SURVEY NOTES:

1. LOCATIONS, ELEVATIONS AND DIMENSIONS OF EXISTING UTILITIES, STRUCTURES AND OTHER FEATURES ARE SHOWN ACCORDING TO THE BEST INFORMATION AVAILABLE AT THE TIME OF THE PREPARATION OF THESE PLANS, BUT DO NOT PURPORT TO BE ABSOLUTELY CORRECT AND ARE APPROXIMATE. THE CONTRACTOR SHALL BE RESPONSIBLE FOR VERIFYING LOCATIONS, ELEVATIONS AND DIMENSIONS OF ALL EXISTING UTILITIES, STRUCTURES AND OTHER FEATURES AFFECTING THE WORK AND AVOIDING DAMAGE TO SAME. LANDSCAPE IRRIGATION LINES ARE NOT SHOWN. THE CONTRACTOR SHALL BE RESPONSIBLE FOR REPAIRING ANY LANDSCAPE IRRIGATION LINES DAMAGES DURING CONSTRUCTION.
2. THE CONTRACTOR SHALL LOCATE OR HAVE LOCATED ALL EXISTING UNDERGROUND PIPELINES, TELEPHONE AND ELECTRIC CONDUITS, AND STRUCTURES IN ADVANCE OF CONSTRUCTION AND SHALL OBSERVE ALL POSSIBLE PRECAUTIONS TO AVOID DAMAGE TO SAME.
3. CONTRACTOR SHALL CONFIRM IN WRITING SURVEYED INFORMATION CLOSELY MATCHES THE DESIGN DOCUMENTS AND PROVIDE A SIGNED/SEALED SURVEY REPORT PRIOR TO START OF CONSTRUCTION. IF CONTRACTOR'S SURVEY DIFFERS FROM THE DESIGN DOCUMENTS, CONTRACTOR SHALL NOTIFY ENGINEER IN WRITING IMMEDIATELY PRIOR TO START OF CONSTRUCTION.

1620 West Fountainhead Pkwy
Suite 201
Tempe, Arizona 85282
Phone: (480) 893-8860
Improving Arizona's Infrastructure Since 1942
WILSON ENGINEERS

CITY OF CHANDLER
RECLAIMED WATER INTERCONNECT FACILITY

RWIF PARTIAL SITE PLAN - 2

CITY PROJECT NO. WW1901.203
WILSON PROJECT NO. 21007

Design: KP	Drawn: JMJ	Checked: SR
Date: 02/2022	Wilson Project No.: 21007	

Rev#	Date	Description	By

VERIFY SCALES
BAR IS ONE INCH ON ORIGINAL DRAWING
0 1"
IF NOT ONE INCH ON THIS SHEET, ADJUST SCALES ACCORDINGLY

Professional Engineer
CERTIFICATE NO.
30185
UDAY K. GANDHE
Date Signed 02/28/2022
ARIZONA U. S. A.

Professional Engineer
CERTIFICATE NO.
41080
SRIRAM RENGIRAJ
Date Signed 02/28/2022
ARIZONA U. S. A.

Sheet No. C-1.03

AGENCY REVIEW

XREFS: XC-SITE; TB-WF-D; C-SITE; CP-ROAD; C-GRID; SEAL-LMG; SEAL-SR

G:\PROJECT\21007\CADD\DESIGN\CIVIL\21007C1.03.DWG, 2/25/2022 6:02:48 PM, slorentzen, 1:2.1887

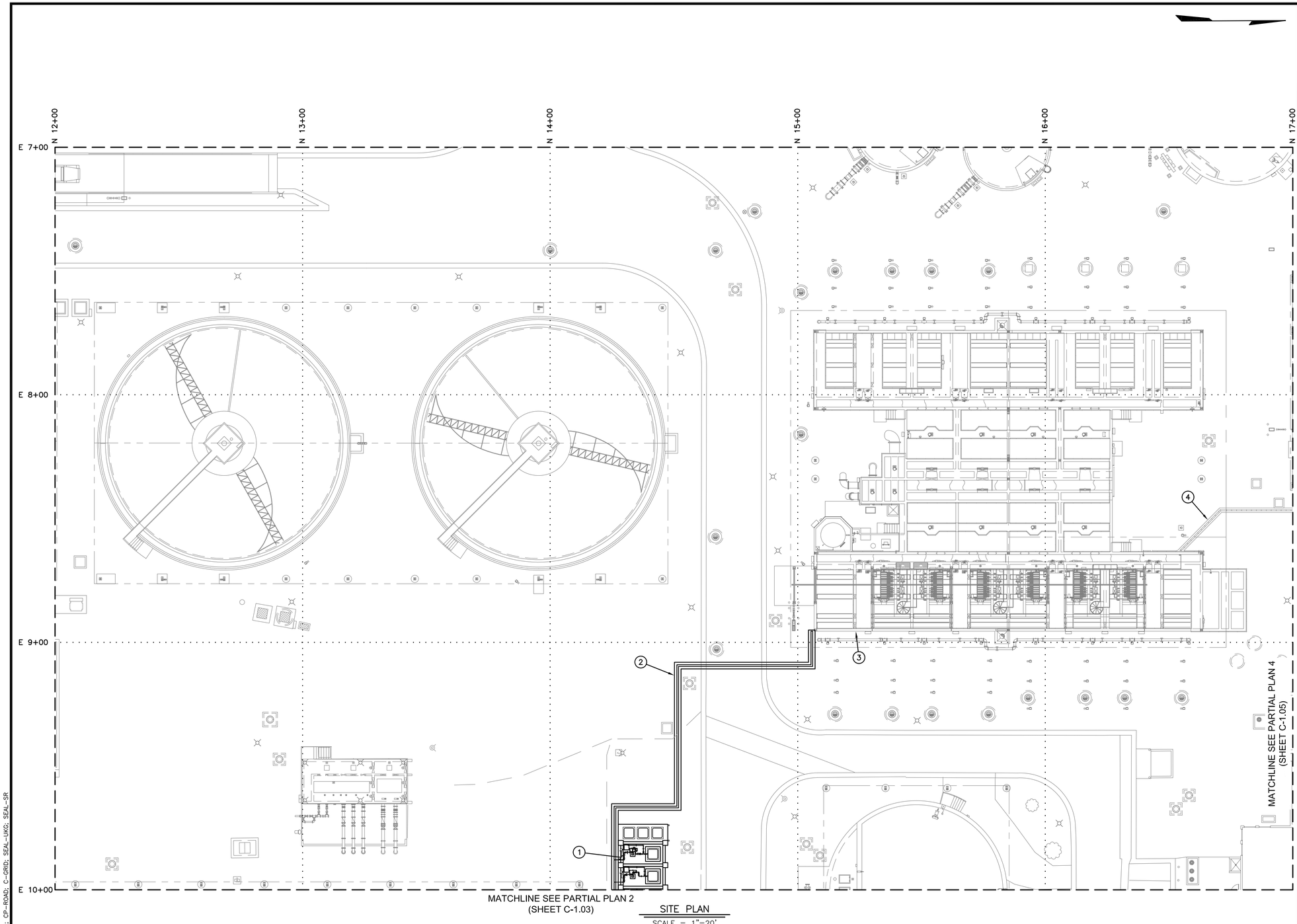

SITE PLAN
SCALE = 1"=20'

NOTE:

1. SHADE CANOPIES NOT SHOWN FOR CLARITY.

0 10 20 40
1" = 20'

KEYED NOTES

1. MFS CHEMICAL FACILITY, SEE SHEET M-2.00 FOR DETAILS
2. CHEMICAL CONTAINMENT TRENCH, SEE DETAIL 301 AND TRENCH CROSS SECTION C SHEET C-7.03
3. 1/4" SODIUM HYPOCHLORITE PIPE SUPPORTED ON DISC FILTER BASIN EAST WALL, SEE DETAIL 203 SHEET M-7.02 FOR FLUSH MOUNT PIPE SUPPORT DETAIL
4. EXISTING CHEMICAL CONTAINMENT TRENCH, SEE DETAIL 301 AND TRENCH CROSS SECTION D SHEET C-7.03

SURVEY NOTES:

1. LOCATIONS, ELEVATIONS AND DIMENSIONS OF EXISTING UTILITIES, STRUCTURES AND OTHER FEATURES ARE SHOWN ACCORDING TO THE BEST INFORMATION AVAILABLE AT THE TIME OF THE PREPARATION OF THESE PLANS, BUT DO NOT PURPORT TO BE ABSOLUTELY CORRECT AND ARE APPROXIMATE. THE CONTRACTOR SHALL BE RESPONSIBLE FOR VERIFYING LOCATIONS, ELEVATIONS AND DIMENSIONS OF ALL EXISTING UTILITIES, STRUCTURES AND OTHER FEATURES AFFECTING THE WORK AND AVOIDING DAMAGE TO SAME. LANDSCAPE IRRIGATION LINES ARE NOT SHOWN. THE CONTRACTOR SHALL BE RESPONSIBLE FOR REPAIRING ANY LANDSCAPE IRRIGATION LINES DAMAGES DURING CONSTRUCTION.
2. THE CONTRACTOR SHALL LOCATE OR HAVE LOCATED ALL EXISTING UNDERGROUND PIPELINES, TELEPHONE AND ELECTRIC CONDUITS, AND STRUCTURES IN ADVANCE OF CONSTRUCTION AND SHALL OBSERVE ALL POSSIBLE PRECAUTIONS TO AVOID DAMAGE TO SAME.
3. CONTRACTOR SHALL CONFIRM IN WRITING SURVEYED INFORMATION CLOSELY MATCHES THE DESIGN DOCUMENTS AND PROVIDE A SIGNED/SEALED SURVEY REPORT PRIOR TO START OF CONSTRUCTION. IF CONTRACTOR'S SURVEY DIFFERS FROM THE DESIGN DOCUMENTS, CONTRACTOR SHALL NOTIFY ENGINEER IN WRITING IMMEDIATELY PRIOR TO START OF CONSTRUCTION.

1620 West Fountainhead Pkwy
Suite 501
Tempe, Arizona 85282
Phone: (480) 893-8860
Improving Arizona's Infrastructure Since 1942
WILSON ENGINEERS

CITY OF CHANDLER
RECLAIMED WATER INTERCONNECT FACILITY

RWIF PARTIAL SITE PLAN - 3

CITY PROJECT NO. WW1901.203
WILSON PROJECT NO. 21007

Design: KP	Drawn: JMJ	Checked: SR
Date: 02/2022	Wilson Project No.: 21007	

Rev#	Date	Description	By

VERIFY SCALES
BAR IS ONE INCH ON ORIGINAL DRAWING
0 1"
IF NOT ONE INCH ON THIS SHEET, ADJUST SCALES ACCORDINGLY

Professional Engineer CERTIFICATE NO. 30185 UDAY K. GANDHE Not Signed 02/18/2022 ARIZONA U. S. A.

Professional Engineer CERTIFICATE NO. 41008 SREERAM RENGARAJ Not Signed 02/18/2022 ARIZONA U. S. A.

Sheet No. C-1.04

AGENCY REVIEW

XREFS: XC-SITE; TB-WE-D; C-SITE; CP-ROAD; C-GRID; SEAL-LKG; SEAL-SR

G:\PROJECT\21007\CADD\DESIGN\CIVIL\21007C1.04.DWG, 2/25/2022 2:35:28 PM, zveli, 1:2.1887

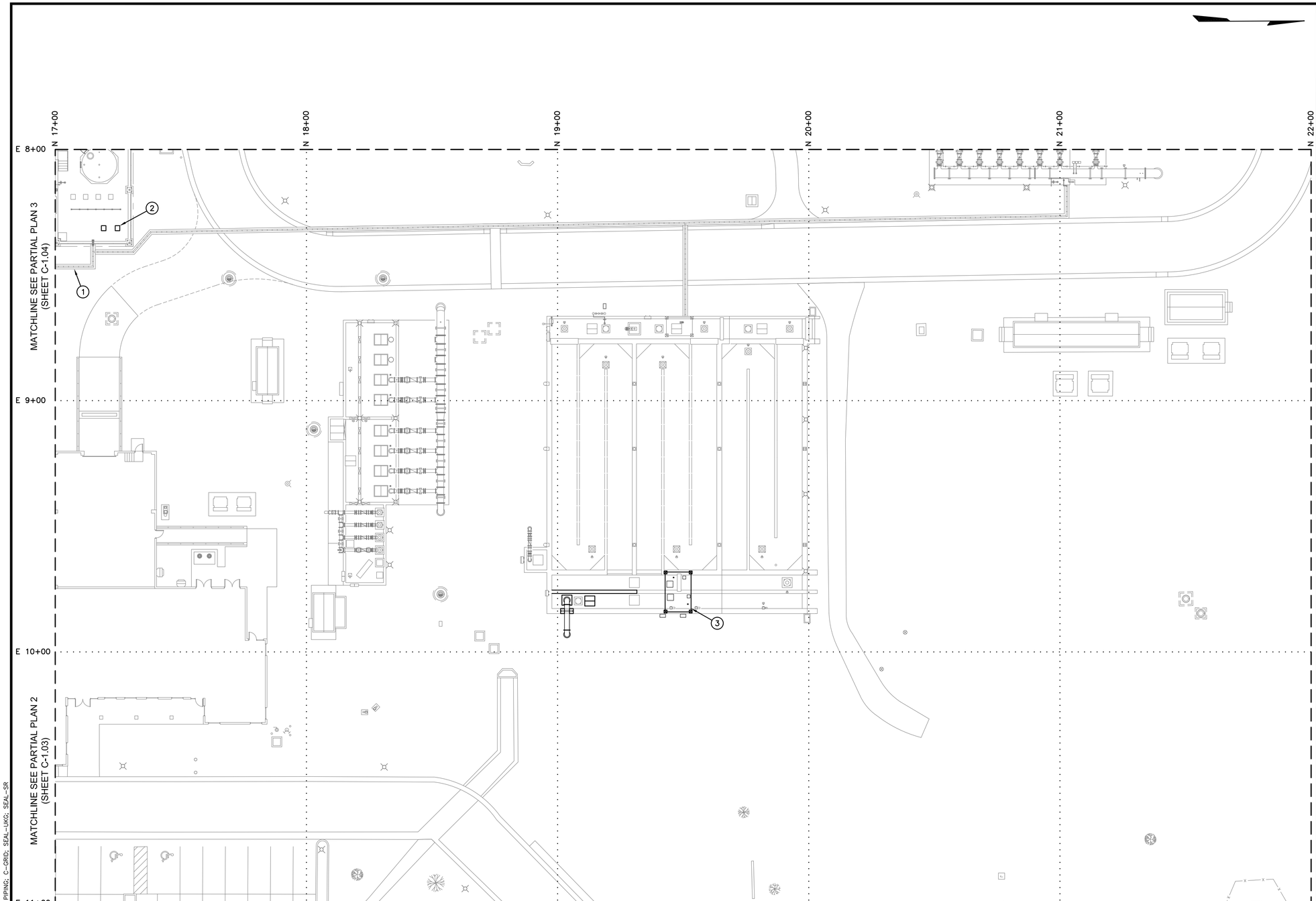

SITE PLAN
SCALE = 1"=20'

NOTE:

1. SHADE CANOPIES NOT SHOWN FOR CLARITY.

0 10 20 40
1" = 20'

KEYED NOTES

1. EXISTING CHEMICAL CONTAINMENT TRENCH, SEE DETAIL 301 AND TRENCH CROSS SECTION D SHEET C-7.03
2. MODIFIED BULK SODIUM HYPOCHLORITE FACILITY, SEE SHEET M-2.31 FOR DETAILS
3. MODIFIED AWRF CHLORINE CONTACT BASIN, SEE SHEET M-1.61 FOR DETAILS

SURVEY NOTES:

1. LOCATIONS, ELEVATIONS AND DIMENSIONS OF EXISTING UTILITIES, STRUCTURES AND OTHER FEATURES ARE SHOWN ACCORDING TO THE BEST INFORMATION AVAILABLE AT THE TIME OF THE PREPARATION OF THESE PLANS, BUT DO NOT PURPORT TO BE ABSOLUTELY CORRECT AND ARE APPROXIMATE. THE CONTRACTOR SHALL BE RESPONSIBLE FOR VERIFYING LOCATIONS, ELEVATIONS AND DIMENSIONS OF ALL EXISTING UTILITIES, STRUCTURES AND OTHER FEATURES AFFECTING THE WORK AND AVOIDING DAMAGE TO SAME. LANDSCAPE IRRIGATION LINES ARE NOT SHOWN. THE CONTRACTOR SHALL BE RESPONSIBLE FOR REPAIRING ANY LANDSCAPE IRRIGATION LINES DAMAGES DURING CONSTRUCTION.
2. THE CONTRACTOR SHALL LOCATE OR HAVE LOCATED ALL EXISTING UNDERGROUND PIPELINES, TELEPHONE AND ELECTRIC CONDUITS, AND STRUCTURES IN ADVANCE OF CONSTRUCTION AND SHALL OBSERVE ALL POSSIBLE PRECAUTIONS TO AVOID DAMAGE TO SAME.
3. CONTRACTOR SHALL CONFIRM IN WRITING SURVEYED INFORMATION CLOSELY MATCHES THE DESIGN DOCUMENTS AND PROVIDE A SIGNED/SEALED SURVEY REPORT PRIOR TO START OF CONSTRUCTION. IF CONTRACTOR'S SURVEY DIFFERS FROM THE DESIGN DOCUMENTS, CONTRACTOR SHALL NOTIFY ENGINEER IN WRITING IMMEDIATELY PRIOR TO START OF CONSTRUCTION.

1620 West Fountainhead Pkwy
Suite 301
Tempe, Arizona 85282
Phone: (480) 893-8860
Improving Arizona's Infrastructure Since 1942
WILSON ENGINEERS

CITY OF CHANDLER
RECLAIMED WATER INTERCONNECT FACILITY

RWIF PARTIAL SITE PLAN – 4

CITY PROJECT NO. WW1901.203
WILSON PROJECT NO. 21007

Design: KP	Drawn: JMJ	Checked: SR
Date: 02/2022	Wilson Project No.: 21007	

Rev#	Date	Description	By

VERIFY SCALES
BAR IS ONE INCH ON ORIGINAL DRAWING
0 1"
IF NOT ONE INCH ON THIS SHEET, ADJUST SCALES ACCORDINGLY

Professional Engineer CERTIFICATE NO. 30185 UDAY K. GANDHE Not Signed 02/28/2022 ARIZONA U. S. A.

Professional Engineer CERTIFICATE NO. 41008 SREERAM RENGARAJ Not Signed 02/28/2022 ARIZONA U. S. A.

Sheet No. C–1.05

AGENCY REVIEW

XREFS: XC–SITE; TB–WE–D; C–SITE; XC–YARD PIPING; C–GRID; SEAL–UKG; SEAL–SR

G:\PROJECT\21007\CADD\DESIGN\CIVIL\21007C1.05.DWG, 2/25/2022 2:39:06 PM, zveli, 1:2.1887

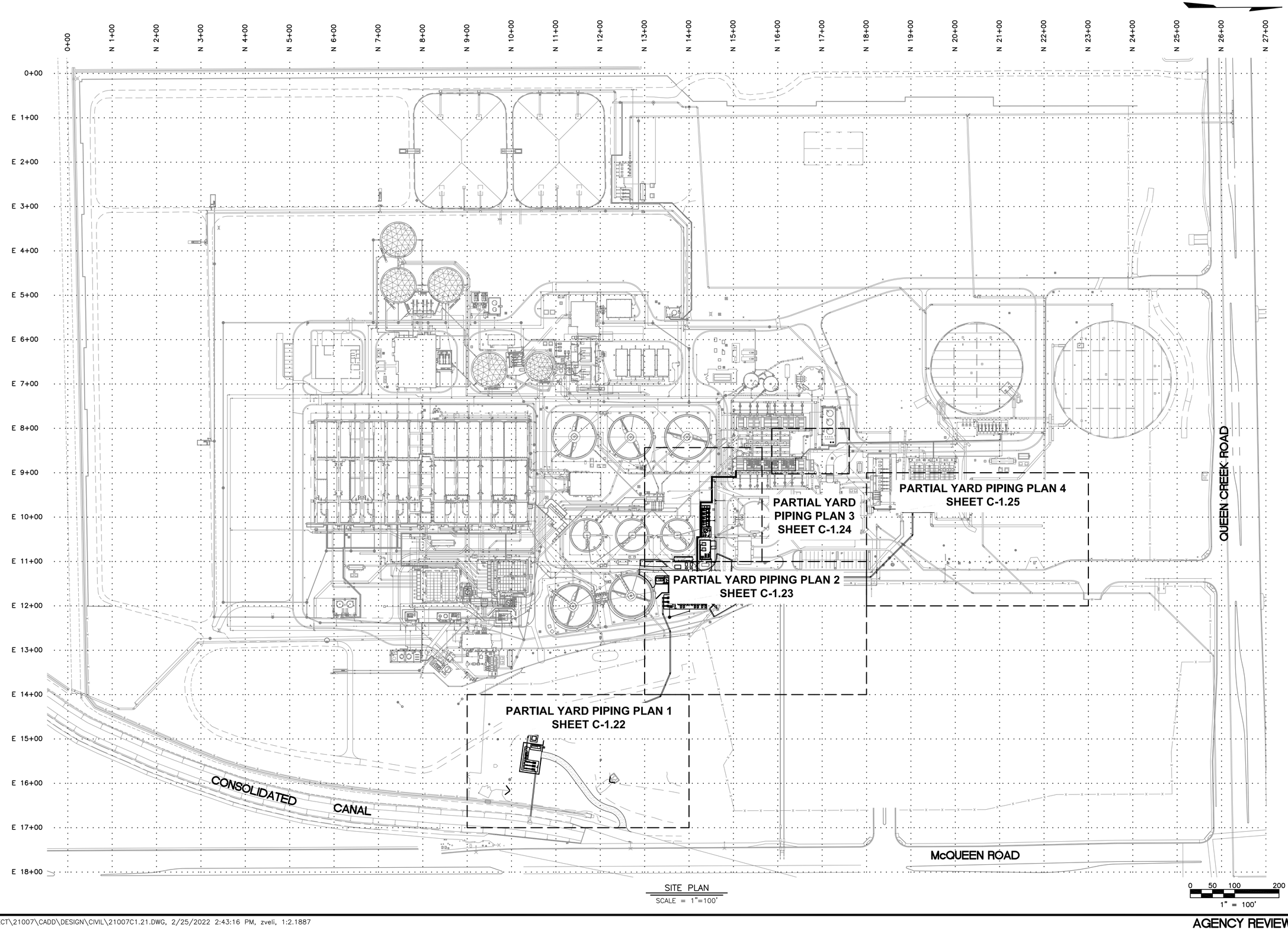

SITE PLAN
SCALE = 1"=100'

0 50 100 200
1" = 100'

XREFS: XC-SITE; TB-WE-D; XC-YARD PIPING; C-YARD PIPING; C-SITE; CP-ROAD; C-GRID; SEAL-UKG; SEAL-SR

G:\PROJECT\21007\CADD\DESIGN\CIVIL\21007C1.21.DWG, 2/25/2022 2:43:16 PM, zveli, 1:2.1887

AGENCY REVIEW

WILSON ENGINEERS
1620 West Fountainhead Pkwy
Suite 501
Tempe, Arizona 85282
Phone: (480) 893-8860
Improving Arizona's Infrastructure Since 1942

CITY OF CHANDLER
RECLAIMED WATER INTERCONNECT FACILITY

RWIF OVERALL YARD PIPING PLAN

CITY PROJECT NO. WW1901.203
WILSON PROJECT NO. 21007

Design: KP	Drawn: JMJ	Checked: SR
Date: 02/2022	Wilson Project No.: 21007	

Rev#	Date	Description	By

VERIFY SCALES
BAR IS ONE INCH ON ORIGINAL DRAWING
0 1"
IF NOT ONE INCH ON THIS SHEET, ADJUST SCALES ACCORDINGLY

Professional Engineer — CERTIFICATE NO. 30185 — UDAY K. GANDHE — Date Signed 02/25/2022 — ARIZONA U.S.A.

Professional Engineer — CERTIFICATE NO. 41008 — SREERAM RENGARAJ — Date Signed 02/25/2022 — ARIZONA U.S.A.

Sheet No. C–1.21

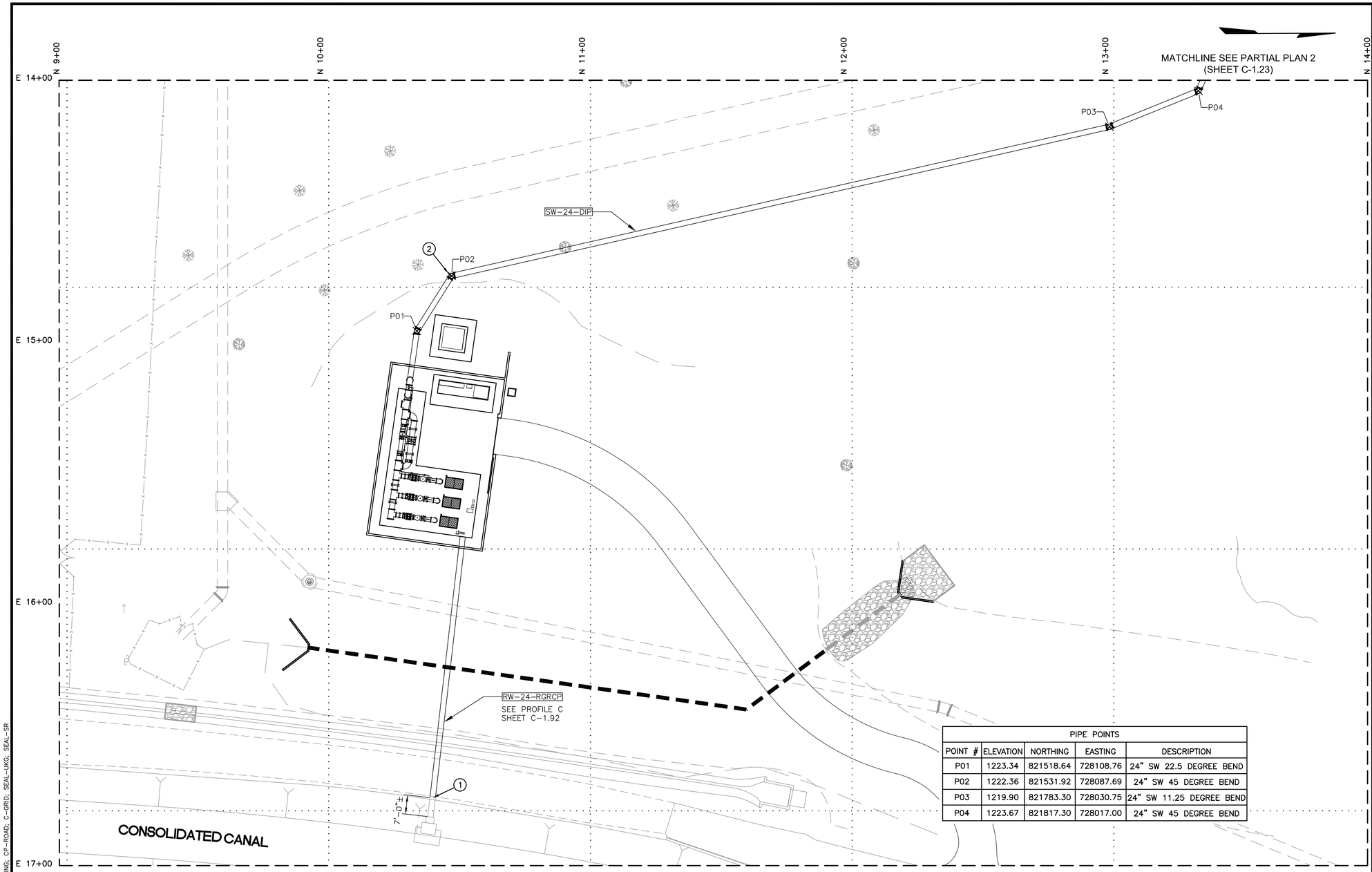

PLAN
SCALE: 1" = 20'

PIPE POINTS				
POINT #	ELEVATION	NORTHING	EASTING	DESCRIPTION
P01	1223.34	821518.64	728108.76	24" SW 22.5 DEGREE BEND
P02	1222.36	821531.92	728087.69	24" SW 45 DEGREE BEND
P03	1219.90	821783.30	728030.75	24" SW 11.25 DEGREE BEND
P04	1223.67	821817.30	728017.00	24" SW 45 DEGREE BEND

KEYED NOTES

1. CONNECT TO SRP CONSOLIDATED CANAL TURNOUT STRUCTURE 24" DIA RGRCP PIPE. LOCATION AND ELEVATION OF SRP CONSOLIDATED CANAL TURNOUT STRUCTURE 24" DIA RGRCP PIPE ARE APPROXIMATE. CONTRACTOR TO FIELD VERIFY. IF CONTRACTOR'S FIELD VERIFICATION DIFFERS FROM THE DESIGN DOCUMENTS, CONTRACTOR SHALL NOTIFY THE ENGINEER IN WRITING IMMEDIATELY PRIOR TO CONNECTING
2. 2" DIA. COMBINATION AIR/VACUUM VALVE

NOTES:

1. ACTUAL NEW PIPE ALIGNMENTS AND DEPTH SHALL BE ADJUSTED IN THE FIELD TO AVOID CONFLICT WITH OTHER UTILITIES. ALL LOCATION ADJUSTMENTS SHALL BE APPROVED BY THE ENGINEER.
2. ALL PIPELINES SHALL MAINTAIN A MINIMUM 4'–0" OF COVER, UNLESS OTHERWISE NOTED.
3. ALL VALVES ON NPW AND POT LINES ARE TO BE INSTALLED WITHIN 3'–0" OF FITTINGS, UNLESS OTHERWISE NOTED.
4. INSTALL NPW VALVE BOXES AND COVERS PER COC STANDARD DETAILS C–406 AND C–317.
5. ELECTRICAL DUCT BANKS VARY IN DIMENSIONS AND DEPTH OF BURIAL, CONTRACTOR TO FIELD VERIFY.
6. ALL NEW MANHOLES SHALL BE 5'–0" IN DIAMETER AND INSTALLED PER MAG STANDARD DETAIL 420, UNLESS OTHERWISE NOTED. ALL NEW MANHOLES SHALL HAVE A COVER AND COLLAR PER COC STANDARD DETAIL C–400 AND C–401, RESPECTIVELY. ALL NEW SEWER MANHOLES SHALL HAVE PVC LINERS. SEE SPECIFICATION SECTION 09910.
7. INSTALL POTABLE WATER VALVE BOXES AND COVERS PER COC STANDARD DETAILS C–307 AND C–317.
8. CONTRACTOR SHALL FIELD VERIFY ALL CONNECTIONS TO EXISTING PIPES AND/OR FACILITIES PRIOR TO CONSTRUCTION.
9. ALL DISIMILAR METALS SHALL HAVE DIELECTRIC ISOLATION FITTINGS PER DETAIL 401 SHEET M–7.04.
10. SHADE CANOPIES NOT SHOWN FOR CLARITY.
11. ALL POTABLE AND NON–POTABLE WATER LINES SHALL BE INSTALLED PER MAG STANDARD DETAIL 404 FOR SEPARATION AND/OR PROTECTION. WHEN A NON–POTABLE WATER MAIN IS ADJACENT OR CROSSES A POTABLE WATER MAIN, THE NON–POTABLE WATER MAIN SHALL BE CONSIDERED A PRESSURE OR FORCE SANITARY SEWER, WHEN A NON–POTABLE WATER MAIN IS ADJENCENT OR CROSSES A SANITARY SEWER, THE NON–POTABLE WATER MAIN SHALL BE CONSIDERED A POTABLE WATER MAIN. PROCESS LINES SHALL BE CONSIDERED AS A PRESSURE OR FORCE SANITARY SEWER AT ALL TIMES.
12. NPW LINES AND POT LINES SHALL HAVE 4'–0" OF MINIMUM COVER. INSTALL FITTINGS AS NECESSARY TO MAINTAIN CLEARANCE AS REQUIRED.
13. THRUST BLOCKS SHALL BE INSTALLED FOR ALL PIPING UP TO 24". RESTRAINED FITTINGS ARE ACCEPTABLE IN AREAS WHERE THRUST BLOCKS CANNOT BE INSTALLED. CONTRACTOR SHALL OBTAIN PRIOR APPROVAL FROM THE ENGINEER FOR SUBSTITUTING RESTRAINED JOINTS FOR THRUST BLOCKS. APPROVAL IS AT THE DISCRETION OF THE ENGINEER.
14. CONNECT TO EXISTING PIPE.
15. THE SITE CONTAINS SEVERAL EXISTING UTILITIES. SOME OF THE NEW PIPING IS PROPOSED IN VERY CLOSE PROXIMITY TO EXISTING PIPING. CONTRACTOR SHALL PROTECT EXISTING PIPING DURING INSTALLATION OF NEW STRUCTURES/PIPING.
16. THRUST RESTRAINTS (INCLUDING THRUST BLOCKS) ARE LOCATED ON ALL EXISTING BURIED PIPING. CONTRACTOR SHALL LOCATE AND PROTECT ALL EXISTING THRUST RESTRAINTS. CONTRACTOR SHALL INSTALL TEMPORARY THRUST RESTRAINTS ON EXISTING PIPING THAT MAY BE IN CONFLICT WITH NEW PIPING AND THEN REINSTALL THRUST RESTRAINTS.
17. NOT ALL VALVES ARE SHOWN ON YARD PIPING SHEETS SEE SPECIFICATIONS AND OTHER SHEETS FOR VALVE INFORMATION.
18. IN AREAS OF NEW PAVEMENT ALL EXISTING VALVE BOXES SHALL BE ADJUSTED OR REMOVED AND REPLACED AS NECESSARY TO MEET COC STANDARD DETAILS C–307 AND C–317.

0 10 20 40
1" = 20'

1620 West Fountainhead Pkwy
Suite 501 85282
Tempe, Arizona
Phone: (480) 893-8860
Improving Arizona's
Infrastructure Since 1942
WILSON ENGINEERS

CITY OF CHANDLER
RECLAIMED WATER INTERCONNECT FACILITY

RWIF PARTIAL YARD PIPING PLAN – 1

CITY PROJECT NO. WW1901.203
WILSON PROJECT NO. 21007

Design: KP	Drawn: JMJ	Checked: SR
Date: 02/2022	Wilson Project No.: 21007	

Rev#	Date	Description	By

VERIFY SCALES
BAR IS ONE INCH ON ORIGINAL DRAWING
0 1"
IF NOT ONE INCH ON THIS SHEET, ADJUST SCALES ACCORDINGLY

Professional Engineer Certificate No. 30185 UDAY K. GANDHE Date Signed 02/28/2022 Arizona U.S.A.

Professional Engineer Certificate No. 41008 SREERAM RENGARAJ Date Signed 02/28/2022 Arizona U.S.A.

Sheet No. C–1.22

XREFS: XC–SITE; TB–WE–D; XC–YARD PIPING; C–SITE; C–YARD PIPING; CP–ROAD; C–GRID; SEAL–UKG; SEAL–SR

G:\PROJECT\21007\CADD\DESIGN\CIVIL\21007C1.22.DWG, 2/25/2022 4:28:11 PM, acantella, 1:2.1887

AGENCY REVIEW

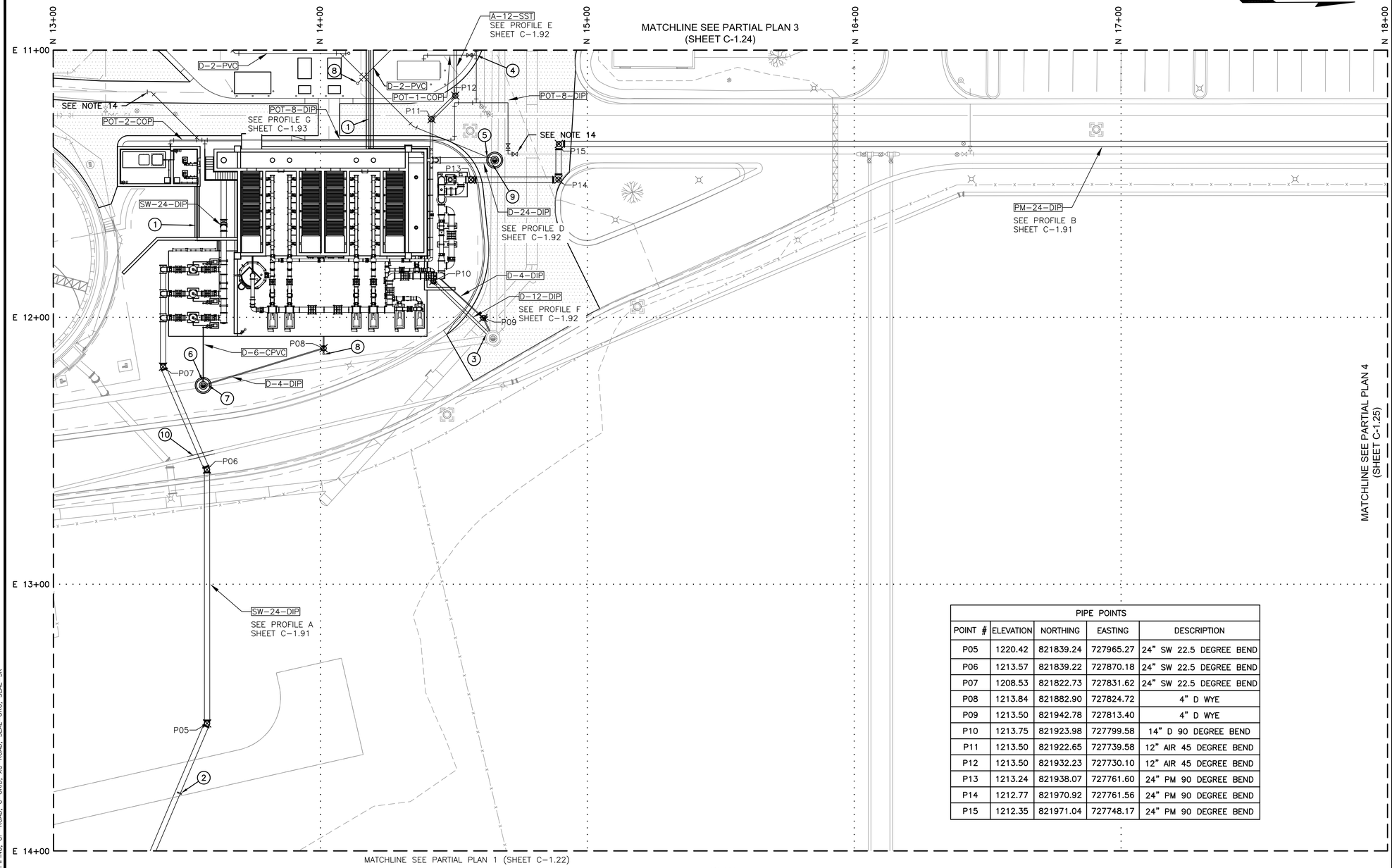

PLAN

SCALE: 1" = 20'

PIPE POINTS				
POINT #	ELEVATION	NORTHING	EASTING	DESCRIPTION
P05	1220.42	821839.24	727965.27	24" SW 22.5 DEGREE BEND
P06	1213.57	821839.22	727870.18	24" SW 22.5 DEGREE BEND
P07	1208.53	821822.73	727831.62	24" SW 22.5 DEGREE BEND
P08	1213.84	821882.90	727824.72	4" D WYE
P09	1213.50	821942.78	727813.40	4" D WYE
P10	1213.75	821923.98	727799.58	14" D 90 DEGREE BEND
P11	1213.50	821922.65	727739.58	12" AIR 45 DEGREE BEND
P12	1213.50	821932.23	727730.10	12" AIR 45 DEGREE BEND
P13	1213.24	821938.07	727761.60	24" PM 90 DEGREE BEND
P14	1212.77	821970.92	727761.56	24" PM 90 DEGREE BEND
P15	1212.35	821971.04	727748.17	24" PM 90 DEGREE BEND

KEYED NOTES

1. CHEMICAL CONTAINMENT TRENCH (TYP)
2. 2" DIA. COMBINATION AIR/VACUUM VALVE
3. 12" DIA DIP MEMBRANE CIP DRAIN PIPE CONNECTION TO SEWER MANHOLE NO. 8
4. 1" DIA COPPER POTABLE WATER PIPE CONNECTION TO 8" DIA POTABLE WATER PIPE
5. 2" DIA PVC AWRF SECONDARY CLARIFIER DRAIN PIPE CONNECTION TO MANHOLE NO. 64
6. 6" DIA PVC SELF-CLEANING STRAINERS BACKWASH DRAIN PIPE CONNECTION TO SEWER MANHOLE NO. 63, SEE DETAIL 203 SHEET C-7.02
7. 4" DIA DIP MEMBRANE TURBIDITY ANALYZER DRAIN PIPE CONNECTION TO SEWER MANHOLE NO. 63, SEE DETAIL 203 SHEET C-7.02
8. PRESSURE CLEAN OUT (TYP), SEE DETAIL 104 SHEET C-7.01
9. 24" DIA DIP MEMBRANE BACKPULSE DRAIN PIPE CONNECTION TO SEWER MANHOLE NO. 64, SEE DETAIL 203 SHEET C-7.02
10. RELOCATE 16" DIA DIP EBP, SEE PIPE PROFILE A SHEET C-1.91 FOR DETAILS.

NOTES:

1. ACTUAL NEW PIPE ALIGNMENTS AND DEPTH SHALL BE ADJUSTED IN THE FIELD TO AVOID CONFLICT WITH OTHER UTILITIES. ALL LOCATION ADJUSTMENTS SHALL BE APPROVED BY THE ENGINEER.
2. ALL PIPELINES SHALL MAINTAIN A MINIMUM 4'–0" OF COVER, UNLESS OTHERWISE NOTED.
3. ALL VALVES ON NPW AND POT LINES ARE TO BE INSTALLED WITHIN 3'–0" OF FITTINGS, UNLESS OTHERWISE NOTED.
4. INSTALL NPW VALVE BOXES AND COVERS PER COC STANDARD DETAILS C–406 AND C–317.
5. ELECTRICAL DUCT BANKS VARY IN DIMENSIONS AND DEPTH OF BURIAL, CONTRACTOR TO FIELD VERIFY.
6. ALL NEW MANHOLES SHALL BE 5'–0" IN DIAMETER AND INSTALLED PER MAG STANDARD DETAIL 420, UNLESS OTHERWISE NOTED. ALL NEW MANHOLES SHALL HAVE A COVER AND COLLAR PER COC STANDARD DETAIL C–400 AND C–401, RESPECTIVELY. ALL NEW SEWER MANHOLES SHALL HAVE PVC LINERS. SEE SPECIFICATION SECTION 09910.
7. INSTALL POTABLE WATER VALVE BOXES AND COVERS PER COC STANDARD DETAILS C–307 AND C–317.
8. CONTRACTOR SHALL FIELD VERIFY ALL CONNECTIONS TO EXISTING PIPES AND/OR FACILITIES PRIOR TO CONSTRUCTION.
9. ALL DISIMILAR METALS SHALL HAVE DIELECTRIC ISOLATION FITTINGS PER DETAIL 401 SHEET M–7.04.
10. SHADE CANOPIES NOT SHOWN FOR CLARITY.
11. ALL POTABLE AND NON–POTABLE WATER LINES SHALL BE INSTALLED PER MAG STANDARD DETAIL 404 FOR SEPARATION AND/OR PROTECTION. WHEN A NON–POTABLE WATER MAIN IS ADJACENT OR CROSSES A POTABLE WATER MAIN, THE NON–POTABLE WATER MAIN SHALL BE CONSIDERED A PRESSURE OR FORCE SANITARY SEWER, WHEN A NON–POTABLE WATER MAIN IS ADJENCENT OR CROSSES A SANITARY SEWER, THE NON–POTABLE WATER MAIN SHALL BE CONSIDERED A POTABLE WATER MAIN. PROCESS LINES SHALL BE CONSIDERED AS A PRESSURE OR FORCE SANITARY SEWER AT ALL TIMES.
12. NPW LINES AND POT LINES SHALL HAVE 4'–0" OF MINIMUM COVER. INSTALL FITTINGS AS NECESSARY TO MAINTAIN CLEARANCE AS REQUIRED.
13. THRUST BLOCKS SHALL BE INSTALLED FOR ALL PIPING UP TO 24". RESTRAINED FITTINGS ARE ACCEPTABLE IN AREAS WHERE THRUST BLOCKS CANNOT BE INSTALLED. CONTRACTOR SHALL OBTAIN PRIOR APPROVAL FROM THE ENGINEER FOR SUBSTITUTING RESTRAINED JOINTS FOR THRUST BLOCKS. APPROVAL IS AT THE DISCRETION OF THE ENGINEER.
14. CONNECT TO EXISTING PIPE.
15. THE SITE CONTAINS SEVERAL EXISTING UTILITIES. SOME OF THE NEW PIPING IS PROPOSED IN VERY CLOSE PROXIMITY TO EXISTING PIPING. CONTRACTOR SHALL PROTECT EXISTING PIPING DURING INSTALLATION OF NEW STRUCTURES/PIPING.
16. THRUST RESTRAINTS (INCLUDING THRUST BLOCKS) ARE LOCATED ON ALL EXISTING BURIED PIPING. CONTRACTOR SHALL LOCATE AND PROTECT ALL EXISTING THRUST RESTRAINTS. CONTRACTOR SHALL INSTALL TEMPORARY THRUST RESTRAINTS ON EXISTING PIPING THAT MAY BE IN CONFLICT WITH NEW PIPING AND THEN REINSTALL THRUST RESTRAINTS.
17. NOT ALL VALVES ARE SHOWN ON YARD PIPING SHEETS SEE SPECIFICATIONS AND OTHER SHEETS FOR VALVE INFORMATION.
18. IN AREAS OF NEW PAVEMENT ALL EXISTING VALVE BOXES SHALL BE ADJUSTED OR REMOVED AND REPLACED AS NECESSARY TO MEET COC STANDARD DETAILS C–307 AND C–317.

0 10 20 40

1" = 20'

1620 West Fountainhead Pkwy
Suite 501
Tempe, Arizona 85282
Phone: (480) 893-8860
Improving Arizona's Infrastructure Since 1942
WILSON ENGINEERS

CITY OF CHANDLER
RECLAIMED WATER INTERCONNECT FACILITY

RWIF PARTIAL YARD PIPING PLAN – 2

CITY PROJECT NO. WW1901.203
WILSON PROJECT NO. 21007

Design: KP | Drawn: JMJ | Checked: SR
Date: 02/2022 | Wilson Project No.: 21007

Rev#	Date	Description	By

VERIFY SCALES
BAR IS ONE INCH ON ORIGINAL DRAWING
0 1"
IF NOT ONE INCH ON THIS SHEET, ADJUST SCALES ACCORDINGLY





Sheet No. C–1.23

AGENCY REVIEW

XREFS: XC–SITE; TB–WE–D; XC–YARD PIPING; C–SITE; C–YARD PIPING; CP–ROAD; C–GRID; XC–ROAD; SEAL–UKG; SEAL–SR

G:\PROJECT\21007\CADD\DESIGN\CIVIL\21007C1.23.DWG, 2/25/2022 4:28:55 PM, acantella, 1:2.1887

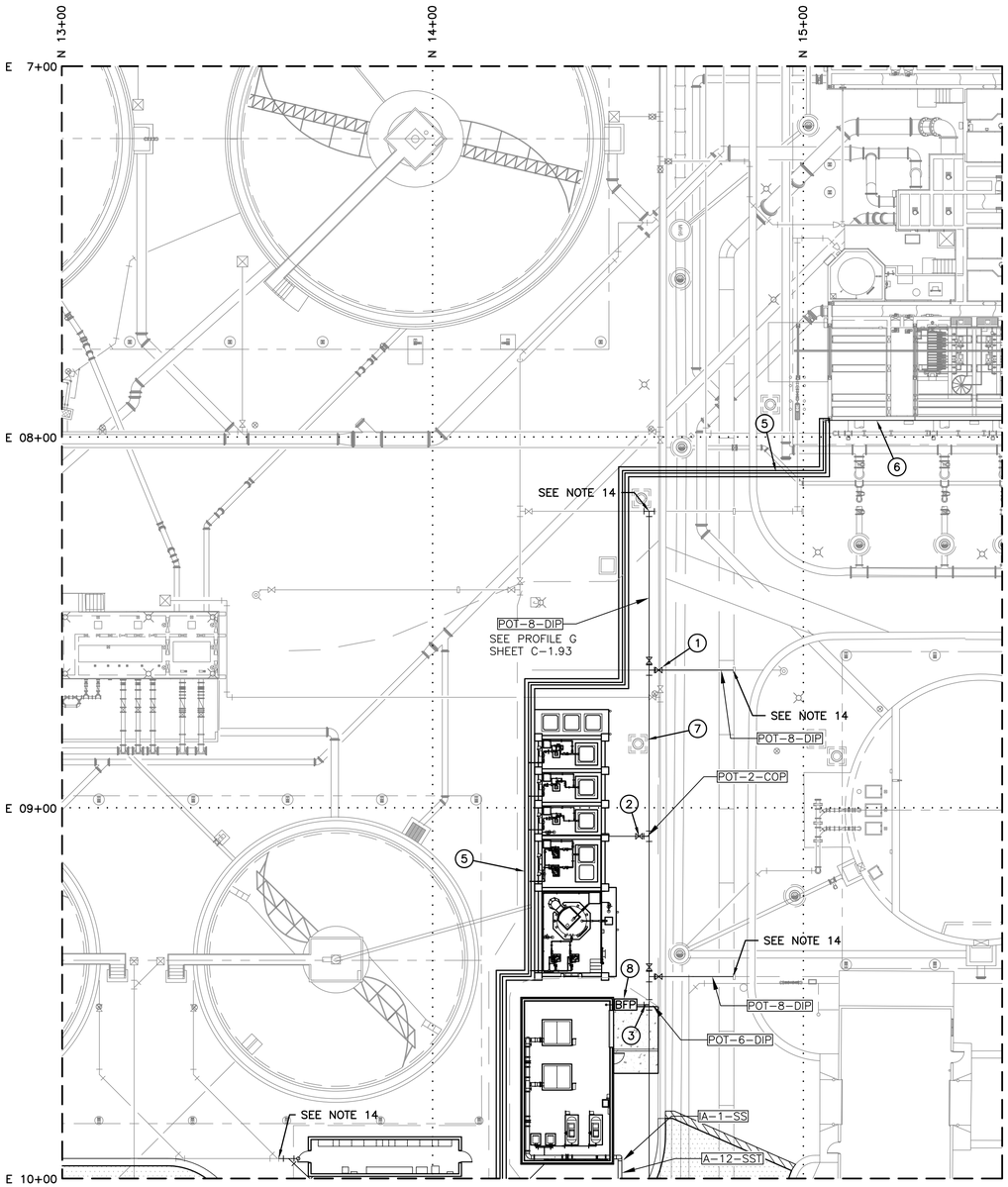

PLAN
SCALE: 1" = 20'

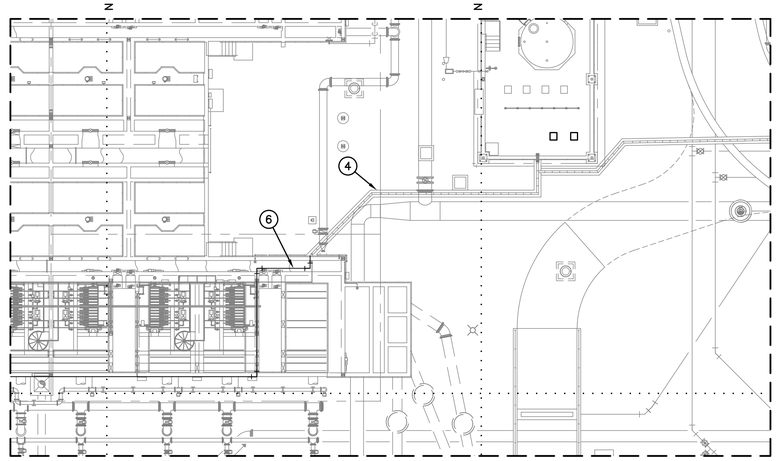

PLAN
SCALE: 1" = 20'

KEYED NOTES

1. 8" DIA GATE VALVE (TYP), SEE DETAIL 101 SHEET C-7.01
2. 2" DIA GATE VALVE, SEE DETAIL 101 SHEET C-7.01
3. 6" DIA DIP FIRE PROTECTION MAIN
4. 1/4" DIA CPVC SODIUM HYPOCHLORITE PIPE IN EXISTING CHEMICAL TRENCH
5. CHEMICAL CONTAINMENT TRENCH (TYP)
6. 1/4" DIA CPVC SODIUM HYPOCHLORITE PIPE, ROUTE THROUGH DISC FILTERS FACILITY
7. RELOCATE NPW LINE AS NEEDED PER MAG DETAIL 404 (TYP)
8. INSTALL FIRE LINE PER COC DETAIL FD-102

NOTES:

1. ACTUAL NEW PIPE ALIGNMENTS AND DEPTH SHALL BE ADJUSTED IN THE FIELD TO AVOID CONFLICT WITH OTHER UTILITIES. ALL LOCATION ADJUSTMENTS SHALL BE APPROVED BY THE ENGINEER.
2. ALL PIPELINES SHALL MAINTAIN A MINIMUM 4'–0" OF COVER, UNLESS OTHERWISE NOTED.
3. ALL VALVES ON NPW AND POT LINES ARE TO BE INSTALLED WITHIN 3'–0" OF FITTINGS, UNLESS OTHERWISE NOTED.
4. INSTALL NPW VALVE BOXES AND COVERS PER COC STANDARD DETAILS C–406 AND C–317.
5. ELECTRICAL DUCT BANKS VARY IN DIMENSIONS AND DEPTH OF BURIAL, CONTRACTOR TO FIELD VERIFY.
6. ALL NEW MANHOLES SHALL BE 5'–0" IN DIAMETER AND INSTALLED PER MAG STANDARD DETAIL 420, UNLESS OTHERWISE NOTED. ALL NEW MANHOLES SHALL HAVE A COVER AND COLLAR PER COC STANDARD DETAIL C–400 AND C–401, RESPECTIVELY. ALL NEW SEWER MANHOLES SHALL HAVE PVC LINERS. SEE SPECIFICATION SECTION 09910.
7. INSTALL POTABLE WATER VALVE BOXES AND COVERS PER COC STANDARD DETAILS C–307 AND C–317.
8. CONTRACTOR SHALL FIELD VERIFY ALL CONNECTIONS TO EXISTING PIPES AND/OR FACILITIES PRIOR TO CONSTRUCTION.
9. ALL DISIMILAR METALS SHALL HAVE DIELECTRIC ISOLATION FITTINGS PER DETAIL 401 SHEET M–7.04.
10. SHADE CANOPIES NOT SHOWN FOR CLARITY.
11. ALL POTABLE AND NON–POTABLE WATER LINES SHALL BE INSTALLED PER MAG STANDARD DETAIL 404 FOR SEPARATION AND/OR PROTECTION. WHEN A NON–POTABLE WATER MAIN IS ADJACENT OR CROSSES A POTABLE WATER MAIN, THE NON–POTABLE WATER MAIN SHALL BE CONSIDERED A PRESSURE OR FORCE SANITARY SEWER, WHEN A NON–POTABLE WATER MAIN IS ADJENCENT OR CROSSES A SANITARY SEWER, THE NON–POTABLE WATER MAIN SHALL BE CONSIDERED A POTABLE WATER MAIN. PROCESS LINES SHALL BE CONSIDERED AS A PRESSURE OR FORCE SANITARY SEWER AT ALL TIMES.
12. NPW LINES AND POT LINES SHALL HAVE 4'–0" OF MINIMUM COVER. INSTALL FITTINGS AS NECESSARY TO MAINTAIN CLEARANCE AS REQUIRED.
13. THRUST BLOCKS SHALL BE INSTALLED FOR ALL PIPING UP TO 24". RESTRAINED FITTINGS ARE ACCEPTABLE IN AREAS WHERE THRUST BLOCKS CANNOT BE INSTALLED. CONTRACTOR SHALL OBTAIN PRIOR APPROVAL FROM THE ENGINEER FOR SUBSTITUTING RESTRAINED JOINTS FOR THRUST BLOCKS. APPROVAL IS AT THE DISCRETION OF THE ENGINEER.
14. CONNECT TO EXISTING PIPE.
15. THE SITE CONTAINS SEVERAL EXISTING UTILITIES. SOME OF THE NEW PIPING IS PROPOSED IN VERY CLOSE PROXIMITY TO EXISTING PIPING. CONTRACTOR SHALL PROTECT EXISTING PIPING DURING INSTALLATION OF NEW STRUCTURES/PIPING.
16. THRUST RESTRAINTS (INCLUDING THRUST BLOCKS) ARE LOCATED ON ALL EXISTING BURIED PIPING. CONTRACTOR SHALL LOCATE AND PROTECT ALL EXISTING THRUST RESTRAINTS. CONTRACTOR SHALL INSTALL TEMPORARY THRUST RESTRAINTS ON EXISTING PIPING THAT MAY BE IN CONFLICT WITH NEW PIPING AND THEN REINSTALL THRUST RESTRAINTS.
17. NOT ALL VALVES ARE SHOWN ON YARD PIPING SHEETS SEE SPECIFICATIONS AND OTHER SHEETS FOR VALVE INFORMATION.
18. IN AREAS OF NEW PAVEMENT ALL EXISTING VALVE BOXES SHALL BE ADJUSTED OR REMOVED AND REPLACED AS NECESSARY TO MEET COC STANDARD DETAILS C–307 AND C–317.

0 10 20 40
1" = 20'

1620 West Fountainhead Pkwy
Suite 501
Tempe, Arizona 85282
Phone: (480) 893-8860
Improving Arizona's Infrastructure Since 1942
WILSON ENGINEERS

CITY OF CHANDLER
RECLAIMED WATER INTERCONNECT FACILITY

RWIF PARTIAL YARD PIPING PLAN – 3

CITY PROJECT NO. WW1901.203
WILSON PROJECT NO. 21007

Design: KP	Drawn: JMJ	Checked: SR
Date: 02/2022	Wilson Project No.: 21007	

Rev#	Date	Description	By

VERIFY SCALES
BAR IS ONE INCH ON ORIGINAL DRAWING
0 1"
IF NOT ONE INCH ON THIS SHEET, ADJUST SCALES ACCORDINGLY

Professional Engineer – Certificate No. 30185 – Uday K. Gandhe – Date Signed 02/28/2022 – Arizona U.S.A.

Professional Engineer – Certificate No. 41008 – Sreeram Rengaraj – Date Signed 02/28/2022 – Arizona U.S.A.

Sheet No. C–1.24

AGENCY REVIEW

XREFS: XC–SITE; TB–WE–D; XC–YARD PIPING; C–SITE; C–YARD PIPING; CP–ROAD; C–GRID; XC–ROAD; SEAL–UKG; SEAL–SR

G:\PROJECT\21007\CADD\DESIGN\CIVIL\21007C1.24.DWG, 2/25/2022 2:40:17 PM, zveli, 1:2.1887

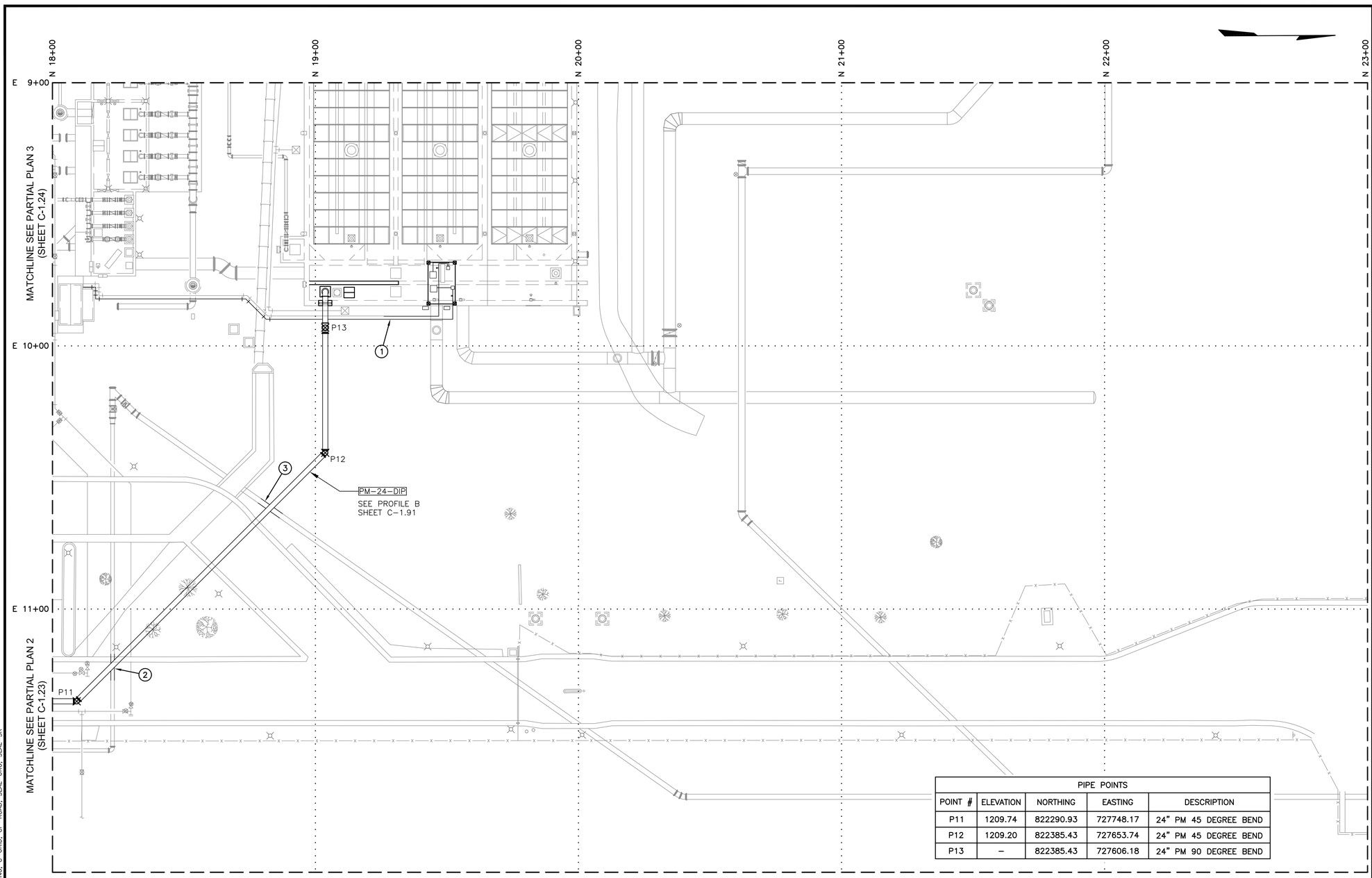

PIPE POINTS				
POINT #	ELEVATION	NORTHING	EASTING	DESCRIPTION
P11	1209.74	822290.93	727748.17	24" PM 45 DEGREE BEND
P12	1209.20	822385.43	727653.74	24" PM 45 DEGREE BEND
P13	–	822385.43	727606.18	24" PM 90 DEGREE BEND

PLAN
SCALE: 1" = 20'

KEYED NOTES

1. 1" DIA PVC CHLORINE SAMPLE PIPE
2. RELOCATE 16" DIA DIP EBP LINE, SEE PIPE PROFILE B SHEET C-1.91 FOR DETAILS.
3. RELOCATE 24" DIA DIP EBP LINE, SEE PIPE PROFILE B SHEET C-1.91 FOR DETAILS.

NOTES:

1. ACTUAL NEW PIPE ALIGNMENTS AND DEPTH SHALL BE ADJUSTED IN THE FIELD TO AVOID CONFLICT WITH OTHER UTILITIES. ALL LOCATION ADJUSTMENTS SHALL BE APPROVED BY THE ENGINEER.
2. ALL PIPELINES SHALL MAINTAIN A MINIMUM 4'–0" OF COVER, UNLESS OTHERWISE NOTED.
3. ALL VALVES ON NPW AND POT LINES ARE TO BE INSTALLED WITHIN 3'–0" OF FITTINGS, UNLESS OTHERWISE NOTED.
4. INSTALL NPW VALVE BOXES AND COVERS PER COC STANDARD DETAILS C–406 AND C–317.
5. ELECTRICAL DUCT BANKS VARY IN DIMENSIONS AND DEPTH OF BURIAL, CONTRACTOR TO FIELD VERIFY.
6. ALL NEW MANHOLES SHALL BE 5'–0" IN DIAMETER AND INSTALLED PER MAG STANDARD DETAIL 420, UNLESS OTHERWISE NOTED. ALL NEW MANHOLES SHALL HAVE A COVER AND COLLAR PER COC STANDARD DETAIL C–400 AND C–401, RESPECTIVELY. ALL NEW SEWER MANHOLES SHALL HAVE PVC LINERS. SEE SPECIFICATION SECTION 09910.
7. INSTALL POTABLE WATER VALVE BOXES AND COVERS PER COC STANDARD DETAILS C–307 AND C–317.
8. CONTRACTOR SHALL FIELD VERIFY ALL CONNECTIONS TO EXISTING PIPES AND/OR FACILITIES PRIOR TO CONSTRUCTION.
9. ALL DISIMILAR METALS SHALL HAVE DIELECTRIC ISOLATION FITTINGS PER DETAIL 401 SHEET M–7.04.
10. SHADE CANOPIES NOT SHOWN FOR CLARITY.
11. ALL POTABLE AND NON–POTABLE WATER LINES SHALL BE INSTALLED PER MAG STANDARD DETAIL 404 FOR SEPARATION AND/OR PROTECTION. WHEN A NON–POTABLE WATER MAIN IS ADJACENT OR CROSSES A POTABLE WATER MAIN, THE NON–POTABLE WATER MAIN SHALL BE CONSIDERED A PRESSURE OR FORCE SANITARY SEWER, WHEN A NON–POTABLE WATER MAIN IS ADJENCENT OR CROSSES A SANITARY SEWER, THE NON–POTABLE WATER MAIN SHALL BE CONSIDERED A POTABLE WATER MAIN. PROCESS LINES SHALL BE CONSIDERED AS A PRESSURE OR FORCE SANITARY SEWER AT ALL TIMES.
12. NPW LINES AND POT LINES SHALL HAVE 4'–0" OF MINIMUM COVER. INSTALL FITTINGS AS NECESSARY TO MAINTAIN CLEARANCE AS REQUIRED.
13. THRUST BLOCKS SHALL BE INSTALLED FOR ALL PIPING UP TO 24". RESTRAINED FITTINGS ARE ACCEPTABLE IN AREAS WHERE THRUST BLOCKS CANNOT BE INSTALLED. CONTRACTOR SHALL OBTAIN PRIOR APPROVAL FROM THE ENGINEER FOR SUBSTITUTING RESTRAINED JOINTS FOR THRUST BLOCKS. APPROVAL IS AT THE DISCRETION OF THE ENGINEER.
14. CONNECT TO EXISTING PIPE.
15. THE SITE CONTAINS SEVERAL EXISTING UTILITIES. SOME OF THE NEW PIPING IS PROPOSED IN VERY CLOSE PROXIMITY TO EXISTING PIPING. CONTRACTOR SHALL PROTECT EXISTING PIPING DURING INSTALLATION OF NEW STRUCTURES/PIPING.
16. THRUST RESTRAINTS (INCLUDING THRUST BLOCKS) ARE LOCATED ON ALL EXISTING BURIED PIPING. CONTRACTOR SHALL LOCATE AND PROTECT ALL EXISTING THRUST RESTRAINTS. CONTRACTOR SHALL INSTALL TEMPORARY THRUST RESTRAINTS ON EXISTING PIPING THAT MAY BE IN CONFLICT WITH NEW PIPING AND THEN REINSTALL THRUST RESTRAINTS.
17. NOT ALL VALVES ARE SHOWN ON YARD PIPING SHEETS SEE SPECIFICATIONS AND OTHER SHEETS FOR VALVE INFORMATION.
18. IN AREAS OF NEW PAVEMENT ALL EXISTING VALVE BOXES SHALL BE ADJUSTED OR REMOVED AND REPLACED AS NECESSARY TO MEET COC STANDARD DETAILS C–307 AND C–317.

0 10 20 40
1" = 20'

1620 West Fountainhead Pkwy
Suite 501
Tempe, Arizona 85282
Phone: (480) 893-8860
Improving Arizona's Infrastructure Since 1942
WILSON ENGINEERS

CITY OF CHANDLER
RECLAIMED WATER INTERCONNECT FACILITY

RWIF PARTIAL YARD PIPING PLAN – 4

CITY PROJECT NO. WW1901.203
WILSON PROJECT NO. 21007

Design: KP	Drawn: JMJ	Checked: SR
Date: 02/2022	Wilson Project No.: 21007	

Rev#	Date	Description	By

VERIFY SCALES
BAR IS ONE INCH ON ORIGINAL DRAWING
0 1"
IF NOT ONE INCH ON THIS SHEET, ADJUST SCALES ACCORDINGLY

Certificate No. 30185 UDAY K. GANDHE Date Signed 02/28/2022 Registered Professional Engineer Civil Arizona U.S.A.

Certificate No. 41008 SREERAM RENGARAJ Date Signed 02/28/2022 Registered Professional Engineer Civil Arizona U.S.A.

Sheet No. C–1.25

AGENCY REVIEW

XREFS: XC–SITE; TB–WE–D; XC–YARD PIPING; C–SITE; C–YARD PIPING; C–GRID; CP–ROAD; SEAL–UKG; SEAL–SR

G:\PROJECT\21007\CADD\DESIGN\CIVIL\21007C1.25.DWG, 2/25/2022 4:30:16 PM, acantella, 1:2.1887

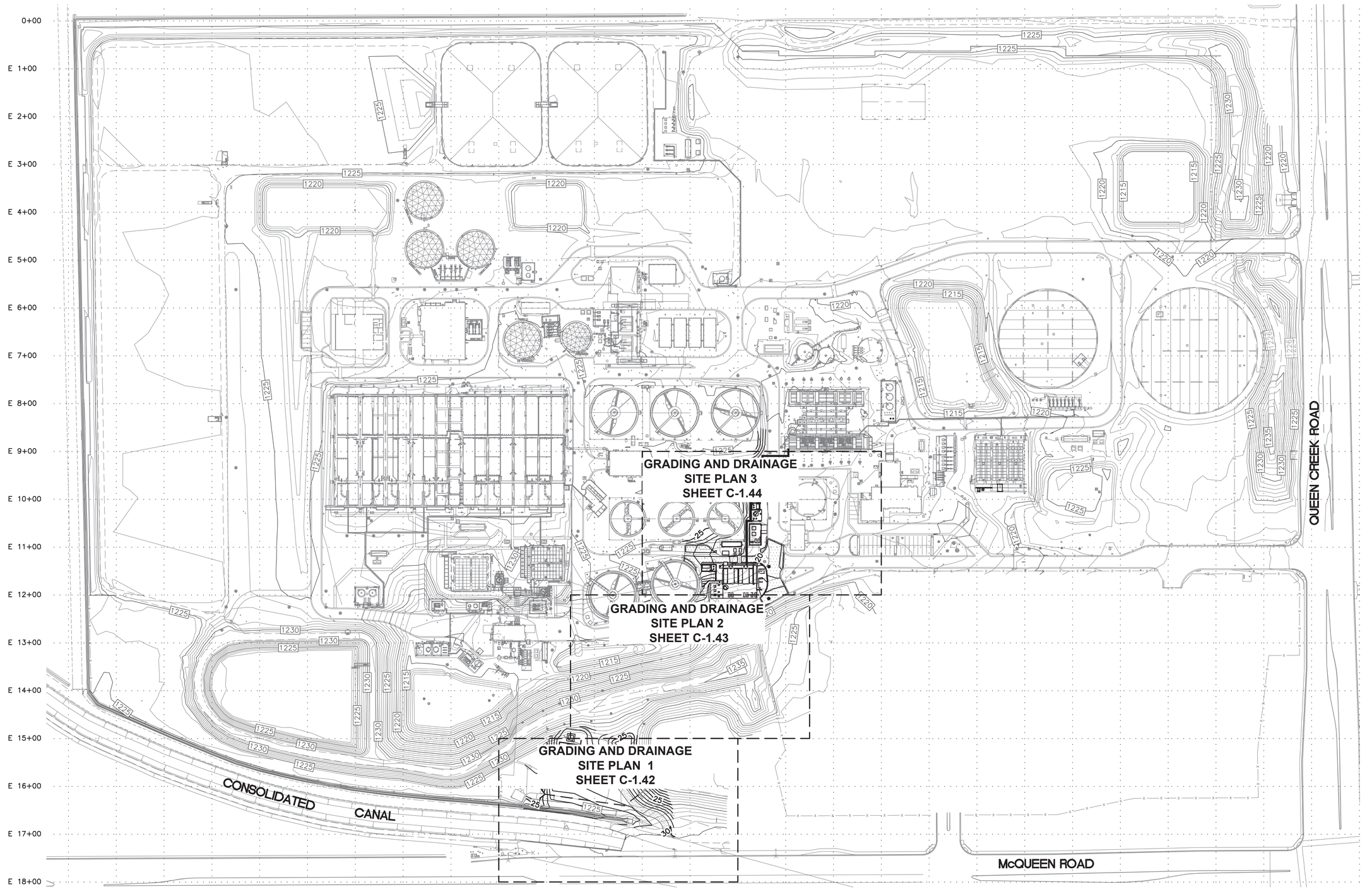

SITE PLAN
SCALE = 1"=100'

0 50 100 200
1" = 100'

XREFS: XC-SITE; C-GRID; TB-WE-D; C-SITE; CP-ROAD; SEAL-UKG; SEAL-SR

G:\PROJECT\21007\CADD\DESIGN\CIVIL\21007C1.41.DWG, 2/25/2022 5:52:58 PM, slorentzen, 1:2.1887

AGENCY REVIEW

1620 West Fountainhead Pkwy
Suite 501
Tempe, Arizona 85282
Phone: (480) 893-8860

WILSON ENGINEERS

Improving Arizona's Infrastructure Since 1942

CITY OF CHANDLER
RECLAIMED WATER INTERCONNECT FACILITY

RWIF GRADING AND DRAINAGE OVERALL SITE PLAN

CITY PROJECT NO. WW1901.203
WILSON PROJECT NO. 21007

Design: DT	Drawn: JMJ	Checked: SR
Date: 02/2022	Wilson Project No.: 21007	

Rev#	Date	Description	By

VERIFY SCALES
BAR IS ONE INCH ON ORIGINAL DRAWING
0 1"
IF NOT ONE INCH ON THIS SHEET, ADJUST SCALES ACCORDINGLY

Professional Engineer
30185
UDAY K. GANDHE
Date Signed 02/28/2022
ARIZONA U. S. A.

Professional Engineer
37356
SCOTT LORENTZEN
Date Signed 02/28/2022
ARIZONA U. S. A.

Sheet No. C-1.41

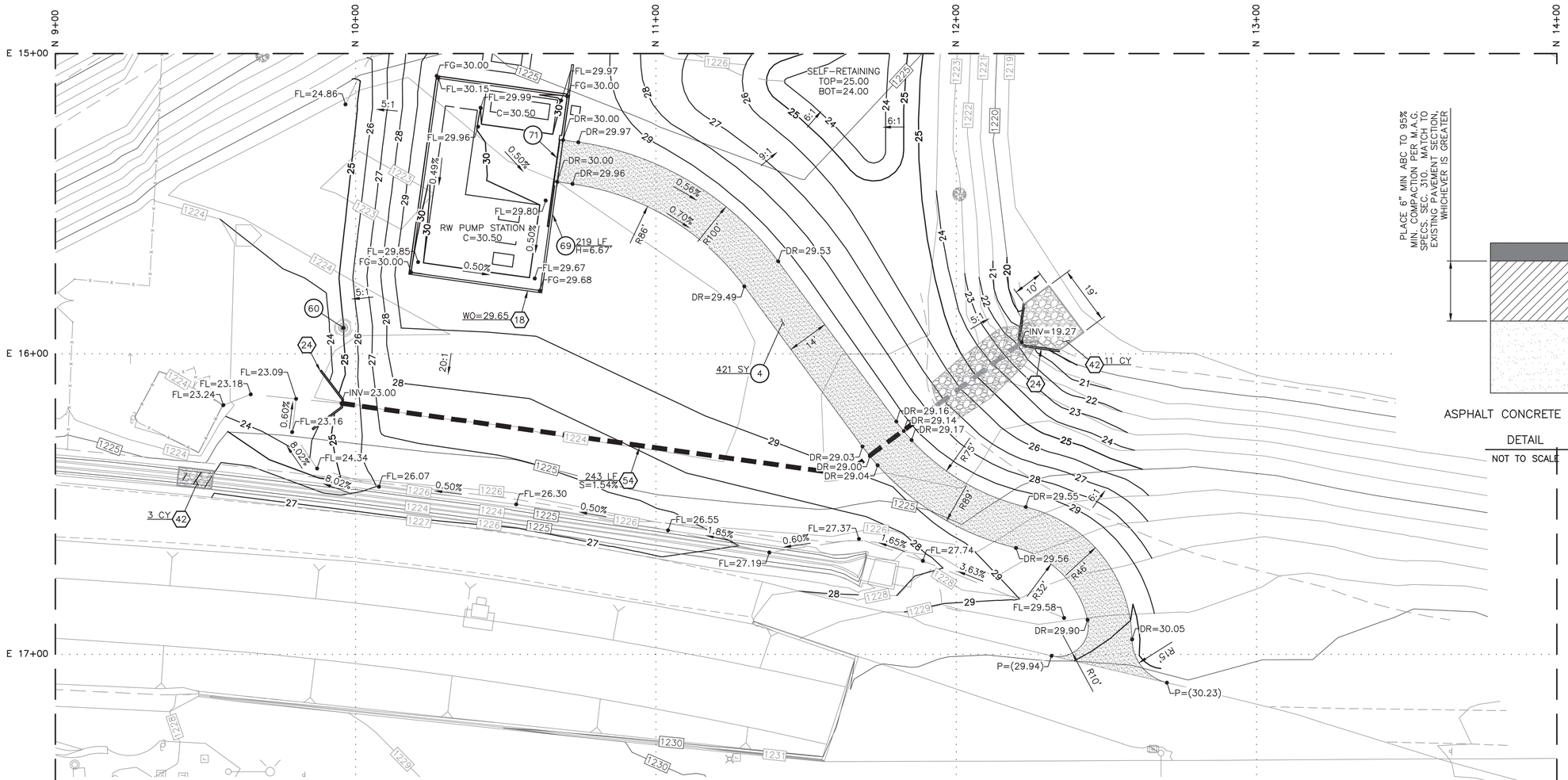

PLACE 6" MIN ABC TO 95% MIN. COMPACTION PER M.A.G. SPECS. SEC. 310. MATCH TO EXISTING PAVEMENT SECTION, WHICHEVER IS GREATER

4" MIN. AC PER SOILS REPORT AND M.A.G. SPECS. SEC. 321. MATCH TO EXISTING PAVEMENT SECTION, WHICHEVER IS GREATER

SCARIFY, MOISTEN AS REQUIRED AND RECOMPACT SUBGRADE TO 95% FOR A MIN. OF 8" AS PER SOILS REPORT*

ASPHALT CONCRETE SECTION

DETAIL 1 / NOT TO SCALE / C-1.42

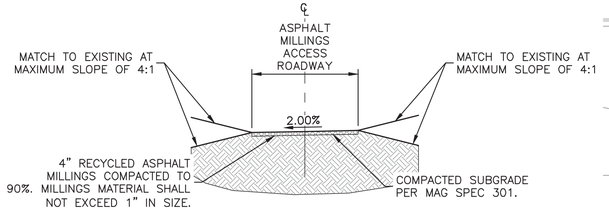

ASPHALT MILLINGS ACCESS ROAD SECTION

DETAIL 2 / NOT TO SCALE / C-1.42

PAVING CONSTRUCTION NOTES

(4) CONSTRUCT RECYCLED ASPHALT MILLINGS ACCESS ROADWAY COMPACTED TO 90% PER DTL. 2 ON SHEET C-1.42. MILLINGS MATERIAL SHALL NOT EXCEED 1" IN SIZE (WIDTH PER PLAN).

(60) ADJUST MANHOLE FRAME & COVER TO FINISH GRADE PER M.A.G. STD. DTL. 422 AND SPEC. SEC. 345. CONSTRUCT CONCRETE COLLAR PER C.O.C. STD. DTL. C-401.

(69) CONSTRUCT SITE WALL PER SECTION 4, SHEET S-6 OF THE STRUCTURAL PLANS. THE HEIGHT OF THE PERIMETER WALL SHALL BE MAINTAINED BETWEEN 7'-6" AND 8'-2" THROUGHOUT THE ENTIRE LENGTH OF THE WALL. WHERE GRADE CAUSES THE PERIMETER WALL HEIGHT TO FALL BELOW OR RISE ABOVE THIS RANGE, THE CONTRACTOR SHALL STEP THE WALL AND ITS FOUNDATION UP OR DOWN 8".

(71) INSTALL SLIDING GATE TO ACCESS FACILITY PER STRUCTURAL DETAILS.

GRADING & DRAINAGE CONSTRUCTION NOTES

(18) INSTALL 6-4"x4" WALL OPENINGS FOR DRAINAGE (3 BLOCKS TURNED SIDEWAYS).

(24) INSTALL "U" TYPE HEADWALL PER M.A.G. STD. DTL. 501-1 MODIFIED FOR 12' WINGWALLS.

(42) INSTALL HAND PLACED ANGULAR NATIVE STONE RIP-RAP (D50-6"), 12" THICK OVER MIRAFI S1000 GEOTEXTILE FABRIC (OR EQUIVALENT) WITH 2 FOOT TURNDOWNS ON ALL EDGES.

(54) INSTALL 18" HDPE HDPE SMOOTH LINED PIPE AT SLOPE PER PLAN. MAINTAIN A MINIMUM COVER OF 2.0 FEET DURING CONSTRUCTION.

LEGEND:

P=50.00	PAVEMENT GRADE	C	CONCRETE
C=50.00	CONCRETE GRADE	GUT	GUTTER
TC=49.00	FINISH GRADE TOP OF CURB	INV	PIPE INVERT ELEVATION
DR=49.00	FINISH GRADE EDGE DIRT ROAD	HWE	HIGH WATER ELEVATION
FG=50.00	FINISHED GRADE		PROPOSED PAVEMENT
FL=50.00	FLOW LINE GRADE		PROPOSED CONCRETE
P=(50.00)	EXISTING PAVEMENT		PROPOSED SAWCUT
2.00% / 4:1	GRADE/SLOPE		PROPOSED RIP-RAP
TRW	TOP OF RETAINING WALL		PROPOSED DECOMPOSED GRANITE
TF	TOP OF FOOTING		EXISTING WATER VALVE
EP	EDGE OF PAVEMENT		EXISTING MANHOLE
VG	VALLEY GUTTER		GRADE BREAK

PLAN

EXISTING FIRE HYDRANT
EXISTING SITE LIGHTING
EXISTING CATCH BASIN
PROPOSED RGRCP
PROPOSED DRYWELL
EXISTING DRYWELL
SECTION VIEW (A / C-1.42)

SCALE: 1" = 20'

NOTE:

THE EXISTING RETENTION AND DRAINAGE FACILITIES ON THIS SITE WILL NOT BE REMOVED FROM SERVICE UNTIL THE PERMANENT RETENTION FACILITIES ARE FUNCTIONAL.

Call at least two full working days before you begin excavation. ARIZONA 811 Arizona Blue Stake, Inc. Dial 8-1-1 or 1-800-STAKE-IT (782-5348) In Maricopa County: (602) 263-1100

WILSON ENGINEERS
1620 West Fountainhead Pkwy
Suite 201
Tempe, Arizona 85282
Phone: (480) 893-8860
Improving Arizona's Infrastructure Since 1942

CITY OF CHANDLER
RECLAIMED WATER INTERCONNECT FACILITY

RWIF GRADING AND DRAINAGE SITE PLAN - 1

CITY PROJECT NO. WW1901.203
WILSON PROJECT NO. 21007

Design: SAL	Rev#	Date	Description	By	
Date: 02/2022					
Drawn: SAL					
Checked: SAL					
Wilson Project No.: 21007					

VERIFY SCALES
BAR IS ONE INCH ON ORIGINAL DRAWING
0 1"
IF NOT ONE INCH ON THIS SHEET, ADJUST SCALES ACCORDINGLY

Professional Engineer — 30185 — UDAY K. GANDHE — Not Valid Without Signature — ARIZONA U.S.A.

Professional Engineer — 37306 — SCOTT LORENTZEN — Not Valid Without Signature — ARIZONA U.S.A.

Sheet No. C-1.42

AGENCY REVIEW

XREFS: TB-WE-D; C-GRID; C-SITE; XC-SITE; CP-ROAD; BASE-GD; SEAL-LUKG; SEAL-SR

G:\PROJECT\21007\CADD\DESIGN\CIVIL\21007C1.42.DWG, 2/25/2022 5:54:44 PM, slorentzen, 1:2.1887

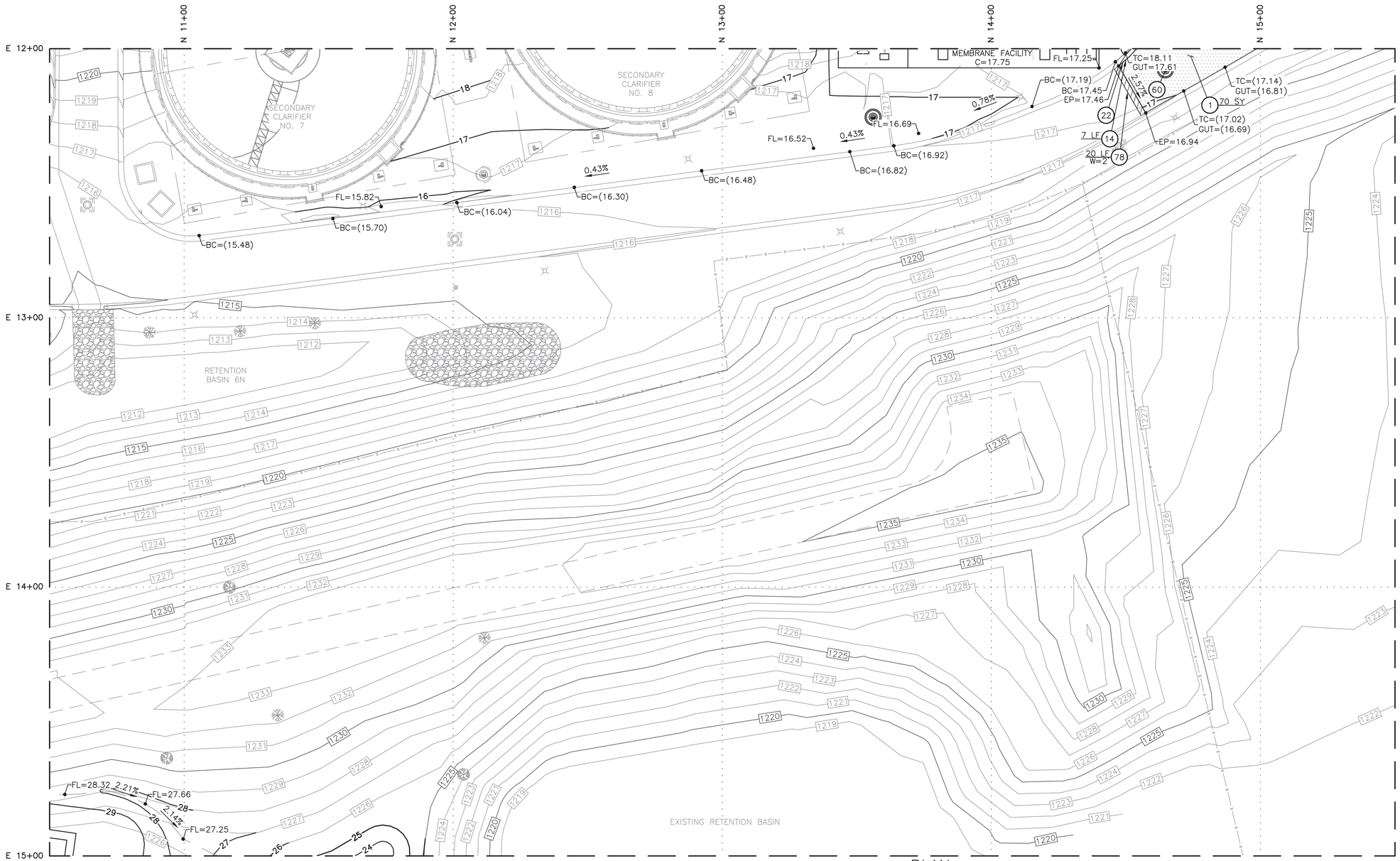

PAVING CONSTRUCTION NOTES

(1) CONSTRUCT A.C. PAVEMENT ON A.B.C. PER DTL. 1 ON SHEET C-1.42.

(14) INSTALL 6" VERTICAL CURB & GUTTER PER M.A.G. STD. DTL. 220 TYPE "A".

(22) CONSTRUCT 5' CURB TRANSITION FROM TYPE "A" TO "C" PER M.A.G. DTL. 221.

(60) ADJUST MANHOLE FRAME & COVER TO FINISH GRADE PER M.A.G. STD. DTL. 422 AND SPEC. SEC. 345. CONSTRUCT CONCRETE COLLAR PER C.O.C. STD. DTL. C-401.

(78) SAWCUT, REMOVE, AND REPLACE EXISTING PAVEMENT. REPLACE PAVEMENT PER DTL. 1 ON SHEET C-1.42, OR MATCH TO EXISTING, WHICHEVER IS GREATER.

LEGEND:

P=50.00	PAVEMENT GRADE	C	CONCRETE
C=50.00	CONCRETE GRADE	GUT	GUTTER
TC=49.00	FINISH GRADE TOP OF CURB	INV	PIPE INVERT ELEVATION
DR=49.00	FINISH GRADE EDGE DIRT ROAD	HWE	HIGH WATER ELEVATION
FG=50.00	FINISHED GRADE		PROPOSED PAVEMENT
FL=50.00	FLOW LINE GRADE		PROPOSED CONCRETE
P=(50.00)	EXISTING PAVEMENT		PROPOSED SAWCUT
2.00% / 4:1	GRADE/SLOPE		PROPOSED RIP-RAP
TRW	TOP OF RETAINING WALL		PROPOSED DECOMPOSED GRANITE
TF	TOP OF FOOTING		EXISTING WATER VALVE
EP	EDGE OF PAVEMENT		EXISTING MANHOLE
VG	VALLEY GUTTER		GRADE BREAK

PLAN

EXISTING FIRE HYDRANT
EXISTING SITE LIGHTING
EXISTING CATCH BASIN
PROPOSED RGRCP
PROPOSED DRYWELL
EXISTING DRYWELL
A C-1.42 SECTION VIEW

SCALE: 1" = 20'

NOTE:

THE EXISTING RETENTION AND DRAINAGE FACILITIES ON THIS SITE WILL NOT BE REMOVED FROM SERVICE UNTIL THE PERMANENT RETENTION FACILITIES ARE FUNCTIONAL.

Call at least two full working days before you begin excavation.
ARIZONA 811 Arizona Blue Stake, Inc.
Dial 8-1-1 or 1-800-STAKE-IT (782-5348)
In Maricopa County: (602) 263-1100

AGENCY REVIEW

WILSON ENGINEERS
1620 West Fountainhead Pkwy
Suite 501
Tempe, Arizona 85282
Phone: (480) 893-8860
Improving Arizona's Infrastructure Since 1942

CITY OF CHANDLER
RECLAIMED WATER INTERCONNECT FACILITY

RWIF GRADING AND DRAINAGE SITE PLAN - 2

CITY PROJECT NO. WW1901.203
WILSON PROJECT NO. 21007

Design: SAL	Drawn: SAL	Checked: SAL
Date: 02/2022	Wilson Project No.: 21007	

Rev#	Date	Description	By

VERIFY SCALES
BAR IS ONE INCH ON ORIGINAL DRAWING
0 1"
IF NOT ONE INCH ON THIS SHEET, ADJUST SCALES ACCORDINGLY

Professional Engineer Certificate No. 30185 UDAY K. GANDHE Date Signed 02/25/2022 ARIZONA U.S.A.

Professional Engineer Certificate No. 37306 SCOTT LORENTZEN Date Signed 02/25/2022 ARIZONA U.S.A.

Sheet No. C-1.43

XREFS: TB-WE-D; C-GRID; C-SITE; XC-SITE; CP-ROAD; BASE-GD; SEAL-UKG; SEAL-SR

G:\PROJECT\21007\CADD\DESIGN\CIVIL\21007C1.43.DWG, 2/25/2022 5:57:47 PM, slorentzen, 1:2.1887

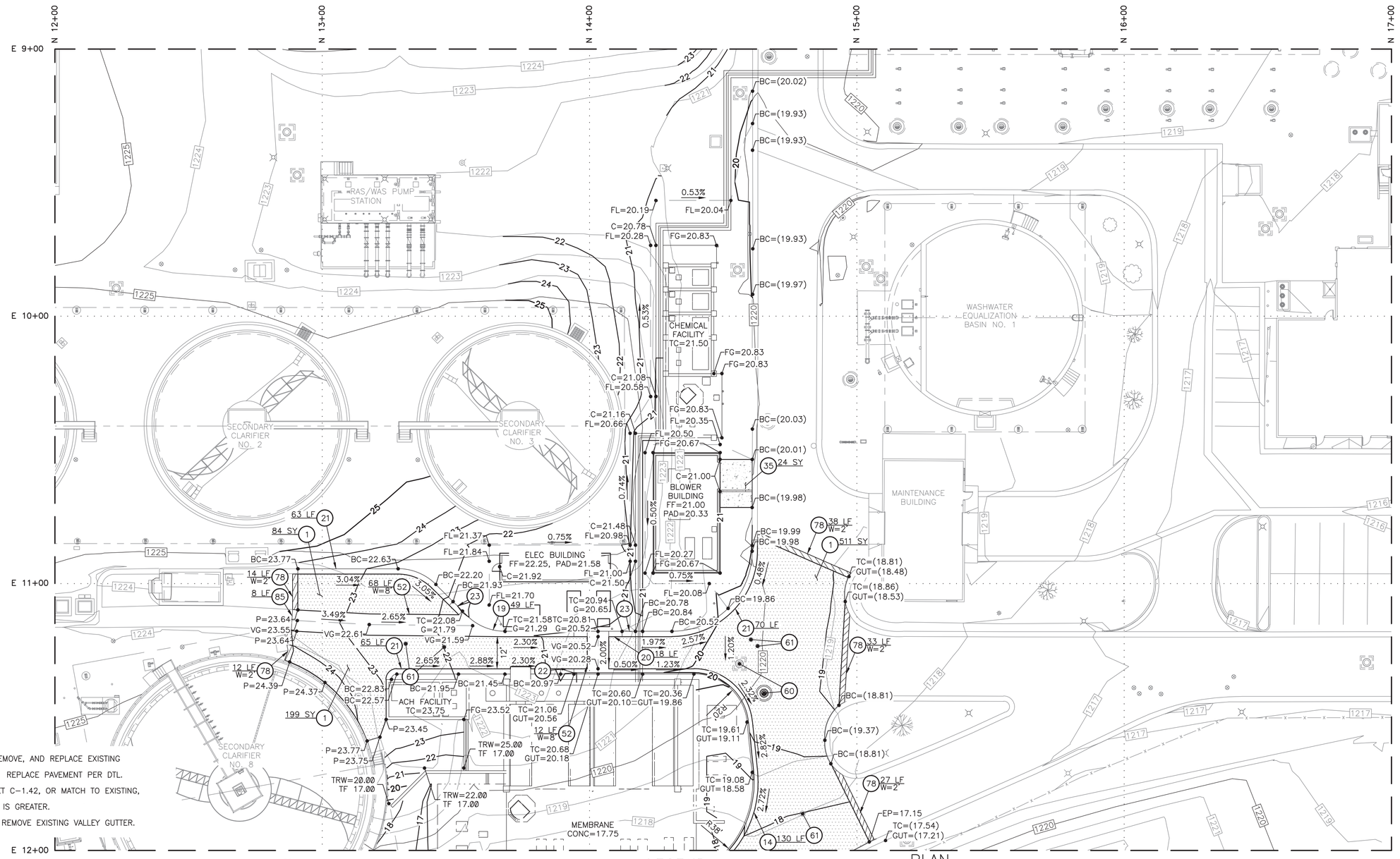

78 SAWCUT, REMOVE, AND REPLACE EXISTING PAVEMENT. REPLACE PAVEMENT PER DTL. 1 ON SHEET C-1.42, OR MATCH TO EXISTING, WHICHEVER IS GREATER.

85 SAWCUT & REMOVE EXISTING VALLEY GUTTER.

PAVING CONSTRUCTION NOTES

1 CONSTRUCT A.C. PAVEMENT ON A.B.C. PER DTL. 1 ON SHEET C-1.42.

14 INSTALL 6" VERTICAL CURB & GUTTER PER M.A.G. STD. DTL. 220 TYPE "A".

19 INSTALL 4" ROLL CURB & GUTTER PER M.A.G. STD. DTL. 220 TYPE "C".

20 INSTALL 3.5" ROLL CURB & GUTTER PER M.A.G. STD. DTL. 220 TYPE "D".

21 INSTALL 24" RIBBON CURB PER M.A.G. STD. DTL. 220 TYPE "B".

22 CONSTRUCT 5' CURB TRANSITION FROM TYPE "A" TO "C" PER M.A.G. DTL. 221.

23 CONSTRUCT 2.5' CURB TERMINATION PER M.A.G. STD. DTL. 222.

35 INSTALL CONCRETE DRIVEWAY PER DETAIL ON ARCHITECTURAL PLANS.

52 INSTALL VALLEY GUTTER PER M.A.G. STD. DTL. 240 MODIFIED FOR WIDTH (WIDTH PER PLAN).

60 ADJUST MANHOLE FRAME & COVER TO FINISH GRADE PER M.A.G. STD. DTL. 422 AND SPEC. SEC. 345. CONSTRUCT CONCRETE COLLAR PER C.O.C. STD. DTL. C-401.

61 ADJUST VALVE, BOX & COVER TO FINISH GRADE PER C.O.C. STD. DTL. C-307.

LEGEND:

P=50.00	PAVEMENT GRADE	C	CONCRETE
C=50.00	CONCRETE GRADE	GUT	GUTTER
TC=49.00	FINISH GRADE TOP OF CURB	INV	PIPE INVERT ELEVATION
DR=49.00	FINISH GRADE EDGE DIRT ROAD	HWE	HIGH WATER ELEVATION
FG=50.00	FINISHED GRADE		PROPOSED PAVEMENT
FL=50.00	FLOW LINE GRADE		PROPOSED CONCRETE
P=(50.00)	EXISTING PAVEMENT		PROPOSED SAWCUT
2.00% / 4:1	GRADE/SLOPE		PROPOSED RIP-RAP
TRW	TOP OF RETAINING WALL		PROPOSED DECOMPOSED GRANITE
TF	TOP OF FOOTING		EXISTING WATER VALVE
EP	EDGE OF PAVEMENT		EXISTING MANHOLE
VG	VALLEY GUTTER		GRADE BREAK

PLAN

EXISTING FIRE HYDRANT
EXISTING SITE LIGHTING
EXISTING CATCH BASIN
PROPOSED RGRCP
PROPOSED DRYWELL
EXISTING DRYWELL
A / C-1.42 SECTION VIEW

20 10 0 10 20 40
SCALE: 1" = 20'

NOTE:

THE EXISTING RETENTION AND DRAINAGE FACILITIES ON THIS SITE WILL NOT BE REMOVED FROM SERVICE UNTIL THE PERMANENT RETENTION FACILITIES ARE FUNCTIONAL.

Call at least two full working days before you begin excavation.
ARIZONA 811 Arizona Blue Stake, Inc.
Dial 8-1-1 or 1-800-STAKE-IT (782-5348)
In Maricopa County: (602) 263-1100

AGENCY REVIEW

XREFS: TB-WE-D; C-GRID; C-SITE; XC-SITE; CP-ROAD; BASE-GD; SEAL-UKG; SEAL-SR

G:\PROJECT\21007\CADD\DESIGN\CIVIL\21007C1.44.DWG, 2/25/2022 5:59:52 PM, slorentzen, 1:2.1887

WILSON ENGINEERS
1620 West Fountainhead Pkwy
Suite 501
Tempe, Arizona 85282
Phone: (480) 893-8860
Improving Arizona's Infrastructure Since 1942

CITY OF CHANDLER
RECLAIMED WATER INTERCONNECT FACILITY

RWIF GRADING AND DRAINAGE SITE PLAN – 3

CITY PROJECT NO. WW1901.203
WILSON PROJECT NO. 21007

Design: SAL	Drawn: SAL	Checked: SAL
Date: 02/2022	Wilson Project No.: 21007	

Rev#	Date	Description	By

VERIFY SCALES
BAR IS ONE INCH ON ORIGINAL DRAWING
0 1"
IF NOT ONE INCH ON THIS SHEET, ADJUST SCALES ACCORDINGLY

CLIFFORD K. GANDHE
30185
UDAY K. GANDHE
Registered Professional Engineer
ARIZONA U.S.A.

SCOTT LORENTZEN
37306
SCOTT LORENTZEN
Registered Professional Engineer
ARIZONA U.S.A.

Sheet No. C-1.44

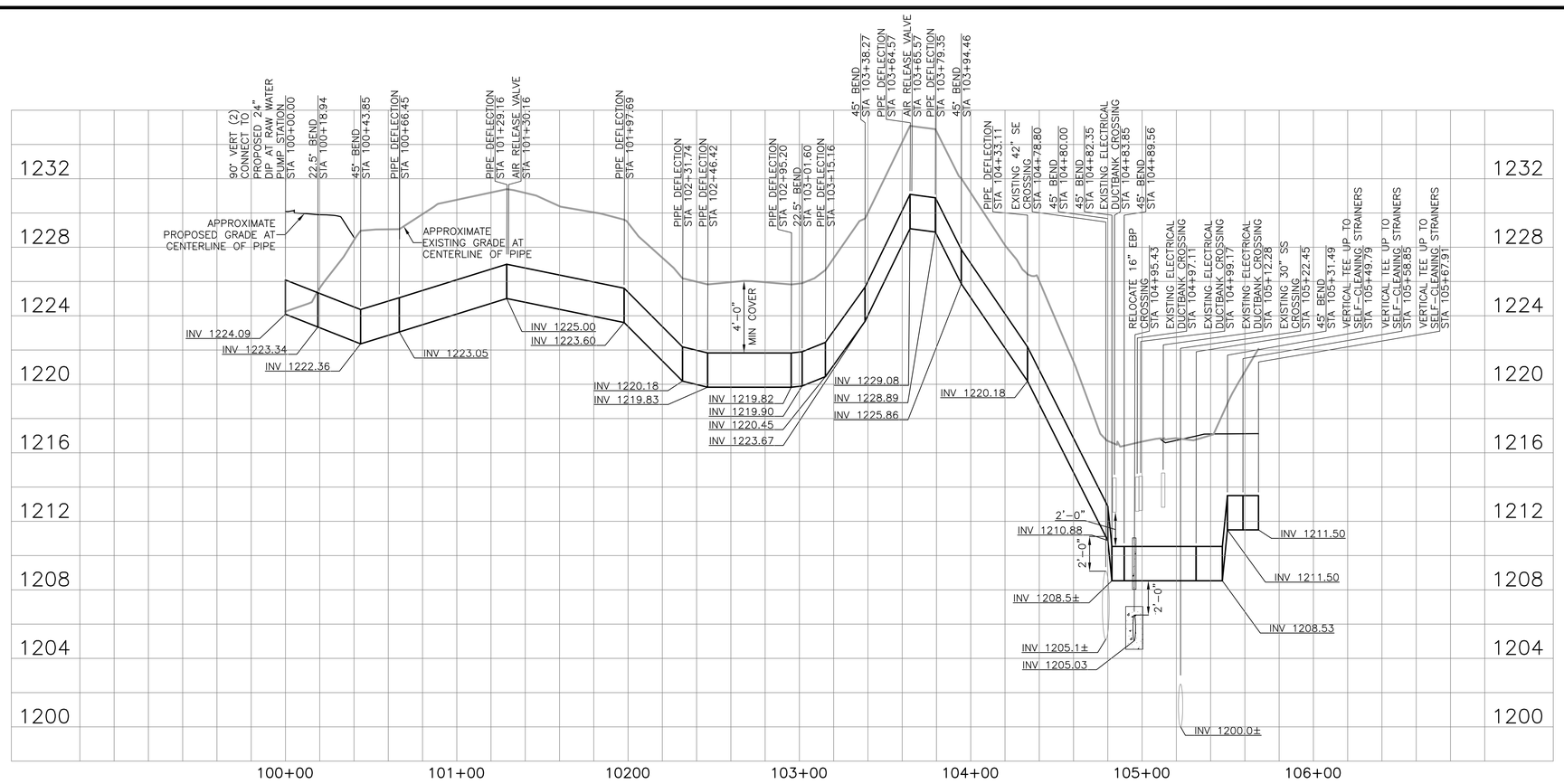

PROFILE A (RWPS FORCE MAIN)

24-DIP

HORT. SCALE: 1"=40'
VERT. SCALE: 1"=4'

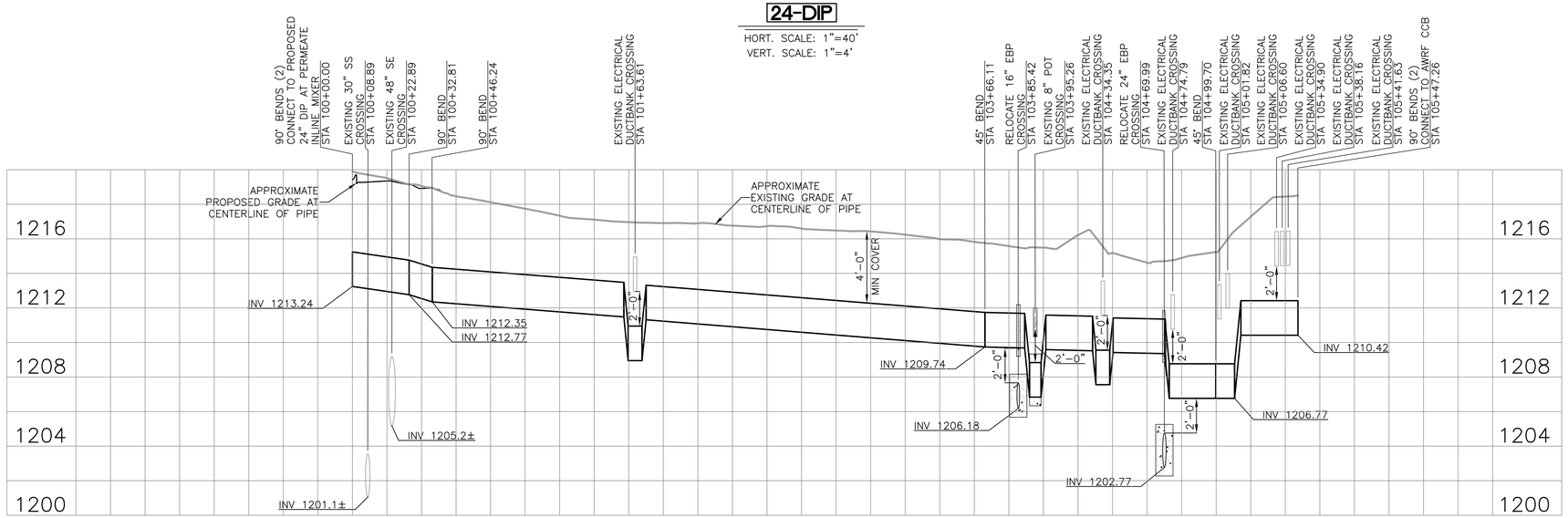

PROFILE B (PERMEATE DISCHARGE)

24-DIP

HORT. SCALE: 1"=40'
VERT. SCALE: 1"=4'

WILSON ENGINEERS
1620 West Fountainhead Pkwy
Suite 501 85282
Tempe, Arizona
Phone: (480) 893-8860
Improving Arizona's Infrastructure Since 1942

CITY OF CHANDLER
RECLAIMED WATER INTERCONNECT FACILITY

RWIF – YARD PIPING PROFILES – 1

CITY PROJECT NO. WW1901.203
WILSON PROJECT NO. 21007

Design: SZ	Drawn: KLC	Checked: SR
Date: 02/2022	Wilson Project No.: 21007	

Rev#	Date	Description	By

VERIFY SCALES
BAR IS ONE INCH ON ORIGINAL DRAWING
0 1"
IF NOT ONE INCH ON THIS SHEET, ADJUST SCALES ACCORDINGLY

Registered Professional Engineer
CERTIFICATE NO. 30185
UDAY K. GANDHE
Date Signed 02/28/2022
ARIZONA U.S.A.

Registered Professional Engineer
CERTIFICATE NO. 41008
SREERAM RENGARAJ
Date Signed 02/28/2022
ARIZONA U.S.A.

Sheet No. C–1.91

SURVEY NOTES:

1. LOCATIONS, ELEVATIONS AND DIMENSIONS OF EXISTING UTILITIES, STRUCTURES AND OTHER FEATURES ARE SHOWN ACCORDING TO THE BEST INFORMATION AVAILABLE AT THE TIME OF THE PREPARATION OF THESE PLANS, BUT DO NOT PURPORT TO BE ABSOLUTELY CORRECT AND ARE APPROXIMATE. THE CONTRACTOR SHALL BE RESPONSIBLE FOR VERIFYING LOCATIONS, ELEVATIONS AND DIMENSIONS OF ALL EXISTING UTILITIES, STRUCTURES AND OTHER FEATURES AFFECTING THE WORK AND AVOIDING DAMAGE TO SAME. LANDSCAPE IRRIGATION LINES ARE NOT SHOWN. THE CONTRACTOR SHALL BE RESPONSIBLE FOR REPAIRING ANY LANDSCAPE IRRIGATION LINES DAMAGES DURING CONSTRUCTION.
2. THE CONTRACTOR SHALL LOCATE OR HAVE LOCATED ALL EXISTING UNDERGROUND PIPELINES, TELEPHONE AND ELECTRIC CONDUITS, AND STRUCTURES IN ADVANCE OF CONSTRUCTION AND SHALL OBSERVE ALL POSSIBLE PRECAUTIONS TO AVOID DAMAGE TO SAME.
3. CONTRACTOR SHALL CONFIRM IN WRITING SURVEYED INFORMATION CLOSELY MATCHES THE DESIGN DOCUMENTS AND PROVIDE A SIGNED/SEALED SURVEY REPORT PRIOR TO START OF CONSTRUCTION. IF CONTRACTOR'S SURVEY DIFFERS FROM THE DESIGN DOCUMENTS, CONTRACTOR SHALL NOTIFY ENGINEER IN WRITING IMMEDIATELY PRIOR TO START OF CONSTRUCTION.

AGENCY REVIEW

XREFS: TB-WE-D, SEAL-UKG, SEAL-SR

G:\PROJECT\21007\CADD\DESIGN\CIVIL\21007C1.91.DWG, 2/25/2022 5:13:54 PM, acantella, 1:2.1887

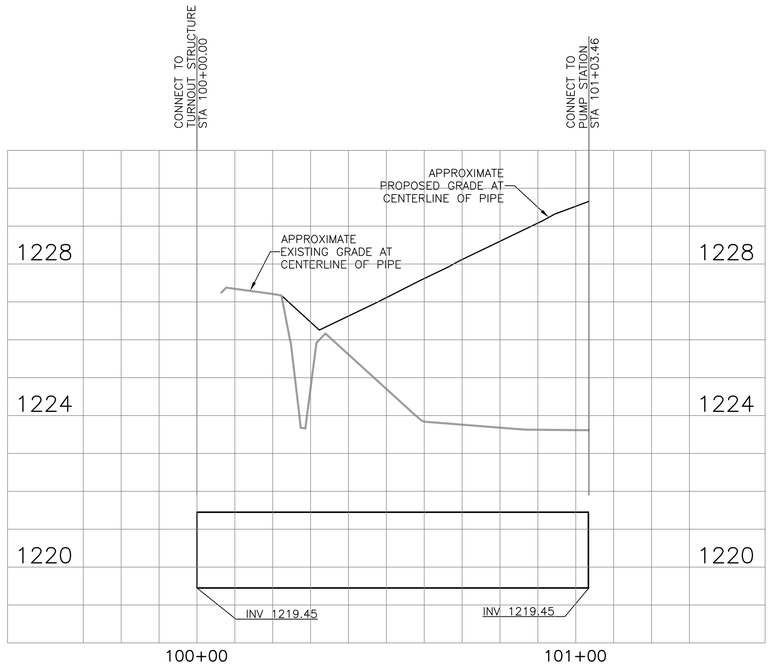

PROFILE C (TURNOUT STRUCTURE RAW WATER PIPE)

24-DIP

HORT. SCALE: 1"=20'
VERT. SCALE: 1"=4'

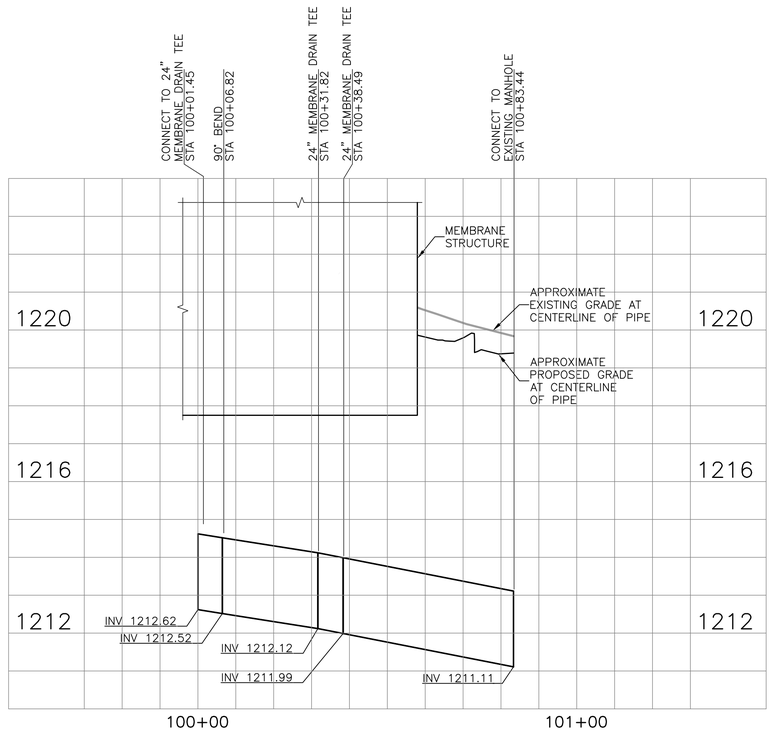

PROFILE D (MEMBRANE DRAIN PIPE)

24-DIP

HORT. SCALE: 1"=20'
VERT. SCALE: 1"=4'

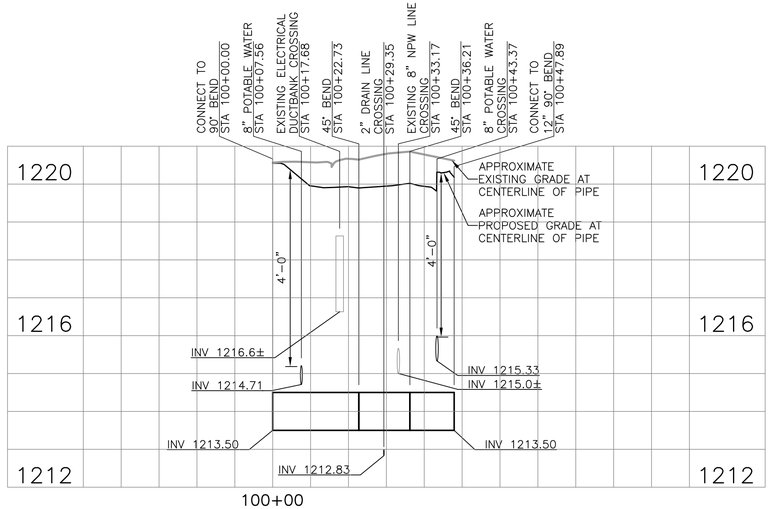

PROFILE E (AIR PIPE)

12-SST

HORT. SCALE: 1"=20'
VERT. SCALE: 1"=4'

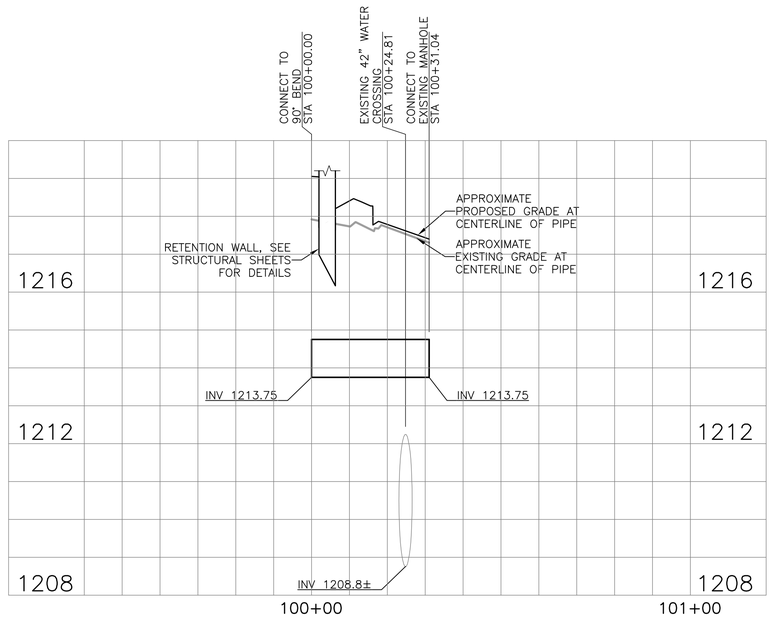

PROFILE F (DRAIN PIPE)

12-DIP

HORT. SCALE: 1"=20'
VERT. SCALE: 1"=4'

SURVEY NOTES:

1. LOCATIONS, ELEVATIONS AND DIMENSIONS OF EXISTING UTILITIES, STRUCTURES AND OTHER FEATURES ARE SHOWN ACCORDING TO THE BEST INFORMATION AVAILABLE AT THE TIME OF THE PREPARATION OF THESE PLANS, BUT DO NOT PURPORT TO BE ABSOLUTELY CORRECT AND ARE APPROXIMATE. THE CONTRACTOR SHALL BE RESPONSIBLE FOR VERIFYING LOCATIONS, ELEVATIONS AND DIMENSIONS OF ALL EXISTING UTILITIES, STRUCTURES AND OTHER FEATURES AFFECTING THE WORK AND AVOIDING DAMAGE TO SAME. LANDSCAPE IRRIGATION LINES ARE NOT SHOWN. THE CONTRACTOR SHALL BE RESPONSIBLE FOR REPAIRING ANY LANDSCAPE IRRIGATION LINES DAMAGES DURING CONSTRUCTION.
2. THE CONTRACTOR SHALL LOCATE OR HAVE LOCATED ALL EXISTING UNDERGROUND PIPELINES, TELEPHONE AND ELECTRIC CONDUITS, AND STRUCTURES IN ADVANCE OF CONSTRUCTION AND SHALL OBSERVE ALL POSSIBLE PRECAUTIONS TO AVOID DAMAGE TO SAME.
3. CONTRACTOR SHALL CONFIRM IN WRITING SURVEYED INFORMATION CLOSELY MATCHES THE DESIGN DOCUMENTS AND PROVIDE A SIGNED/SEALED SURVEY REPORT PRIOR TO START OF CONSTRUCTION. IF CONTRACTOR'S SURVEY DIFFERS FROM THE DESIGN DOCUMENTS, CONTRACTOR SHALL NOTIFY ENGINEER IN WRITING IMMEDIATELY PRIOR TO START OF CONSTRUCTION.

WILSON ENGINEERS
1620 West Fountainhead Pkwy
Suite 501 85282
Tempe, Arizona
Phone: (480) 893-8860
Improving Arizona's Infrastructure Since 1942

CITY OF CHANDLER
RECLAIMED WATER INTERCONNECT FACILITY

RWIF – YARD PIPING PROFILES – 2

CITY PROJECT NO. WW1901.203
WILSON PROJECT NO. 21007

Design: AC	Drawn: KLC	Checked: SR
Date: 02/2022	Wilson Project No.: 21007	

Rev#	Date	Description	By

VERIFY SCALES
BAR IS ONE INCH ON ORIGINAL DRAWING
0 1"
IF NOT ONE INCH ON THIS SHEET, ADJUST SCALES ACCORDINGLY

Professional Engineer Certificate No. 30185 UDAY K. GANDHE Date Signed 02/28/2022 Arizona U.S.A.

Professional Engineer Certificate No. 41008 SREERAM RENGARAJ Date Signed 02/28/2022 Arizona U.S.A.

Sheet No. C–1.92

AGENCY REVIEW

XREFS: TB-WE-D; SEAL-UKG; SEAL-SR

G:\PROJECT\21007\CADD\DESIGN\CIVIL\21007C1.92.DWG, 2/25/2022 4:51:49 PM, acantella, 1:2.1887

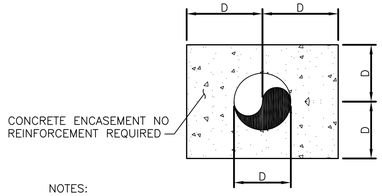

NOTES:

1. D=PIPE OUTSIDE DIAMETER OR 6" MINIMUM WHICH EVER IS GREATER.
2. REINFORCEMENT IS NOT REQUIRED.
3. CLASS "B" CONCRETE 3000 PSI.
4. PIPES PASSING UNDER WALLS SHALL BE WRAPPED IN VISQUEEN AND ENCASED.
5. PIPES SHALL BE LAID SO THAT FITTINGS, FLANGES, JOINTS, ETC. ARE NOT ENCASED.
6. ENCASEMENTS FOR FUTURE PIPES SHALL ENCASE FLANGE BY FLANGE DIP.
7. ENCASEMENT SHALL BE SEPARATED FROM FOOTING BY A MINIMUM OF 6" OF COMPACTED SOIL.
8. CLEAN CUT VERTICAL WALLS OF TRENCH MAY BE USED AS FORMS.
9. ENCASEMENT SHALL NOT BE ALL OR PART OF A THRUST BLOCK.
10. PIPE ENCASEMENTS FOR FUTURE USE SHALL BE CAPPED.

CONCRETE ENCASEMENT

DETAIL	102
NOT TO SCALE	–

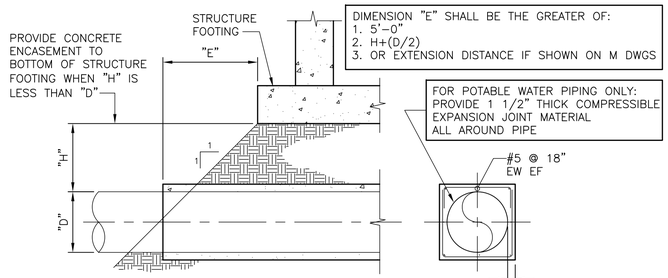

ALL PIPING IS TO BE ENCASED AS FOLLOWS:

ALL PIPE, CONDUIT, ELECTRICAL LINES ETC. WHICH ENCOMPASS AN AREA OF 8", EITHER BY ITSELF, OR THE CO-LOCATION OF SMALLER ELEMENTS EQUALING 8" SHALL BE ENCASED IN CONCRETE WHEN THEY ARE LOCATED LESS THAN 2'-0" BELOW BELOW BOTTOM OF CONCRETE SLAB, FOUNDATION ETC. THIS REQUIREMENT MUST ALSO TAKE INTO ACCOUNT ALL APPLICABLE CODES AND REQUIREMENTS WHERE ENCASEMENT IS NOT ALLOWED BY SAID CODES. WHERE ENCASEMENT IS NOT PERMITTED, ELEMENTS WHICH ARE REGULATED SHALL BE PLACED AS THE CODE REQUIRES FOR THAT PARTICULAR ITEM OR ITEMS. IN THOSE CASES THE ITEM WHICH MAY NOT BE ENCASED SHALL BE PLACED MORE THAN 2'-0" BELOW THE STRUCTURAL CONCRETE.

CONCRETE ENCASEMENT FOR PIPES UNDER STRUCTURES

DETAIL	103
NOT TO SCALE	–

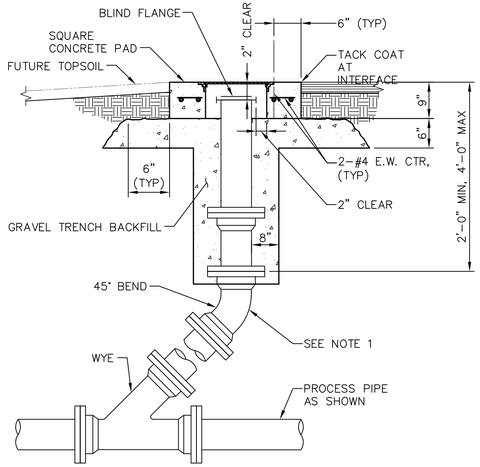

NOTE:
1. SAME SIZE AS PROCESS PIPE UP TO 8" MAX.

PRESSURE CLEANOUT

DETAIL	104
NOT TO SCALE	–

WILSON ENGINEERS
1620 West Fountainhead Pkwy
Suite 501 85282
Tempe, Arizona
Phone: (480) 893-8860
Improving Arizona's Infrastructure Since 1942

CITY OF CHANDLER
RECLAIMED WATER INTERCONNECT FACILITY

CIVIL DETAILS – 1

CITY PROJECT NO. WW1901.203
WILSON PROJECT NO. 21007

Design: HA	Drawn: AJC	Checked: SR
Date: 02/2022	Wilson Project No.: 21007	

Rev#	Date	Description	By

VERIFY SCALES
BAR IS ONE INCH ON ORIGINAL DRAWING
0 1"
IF NOT ONE INCH ON THIS SHEET, ADJUST SCALES ACCORDINGLY

Registered Professional Engineer (Civil) CERTIFICATE NO. 30185 UDAY K. GANDHE Date Signed 02/28/2022 ARIZONA U. S. A.

Registered Professional Engineer (Civil) CERTIFICATE NO. 41008 SREERAM RENGARAJ Date Signed 02/28/2022 ARIZONA U. S. A.

Sheet No. C-7.01

G:\PROJECT\21007\CADD\DESIGN\CIVIL\21007C7.01.DWG, 2/25/2022 4:32:42 PM, acantella, 1:2.1887

AGENCY REVIEW

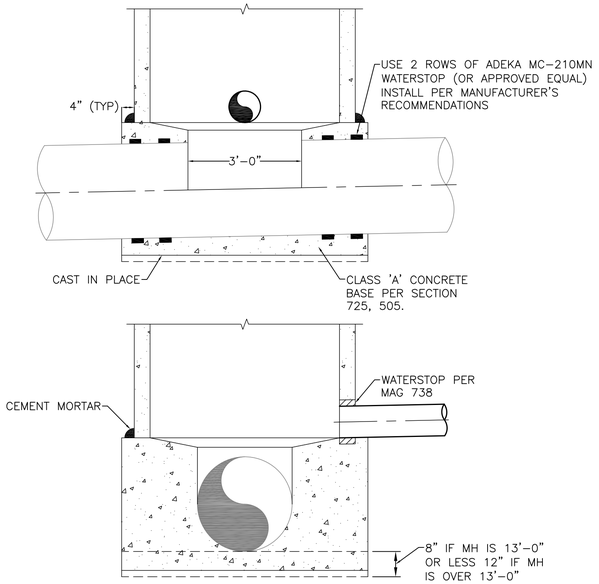

NOTES:
1. CUT OUT EXISTING PIPE TO THE SPRINGLINE.
2. INVERT OF TAP SHALL BE EQUAL TO OR HIGHER THAN THE CROWN OF THE EXISTING SEWER MAIN.

CONNECTION TO EXISTING SEWER MAINS

DETAIL	201
NOT TO SCALE	–

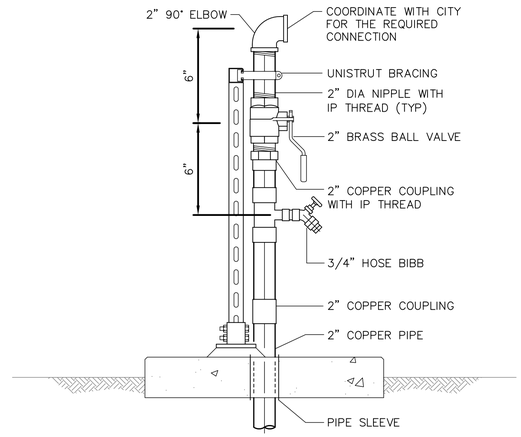

SIDE ELEVATION

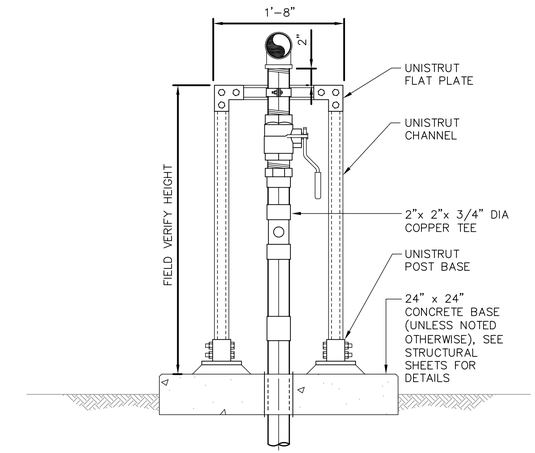

FRONT ELEVATION

POST HYDRANT AND BRACING ASSEMBLY

DETAIL	202
NOT TO SCALE	–

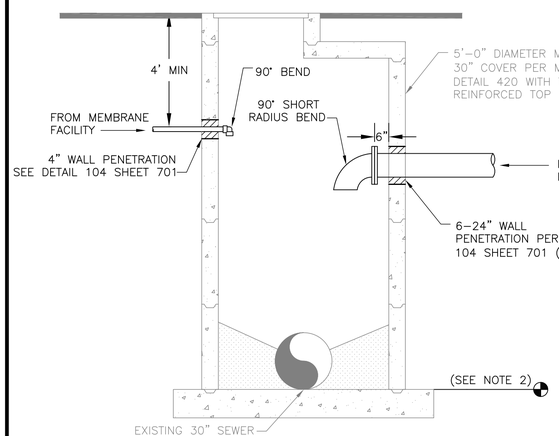

NOTES:
1. CONTRACTOR SHALL FIELD VERIFY 30" SANITARY SEWER INVERT PRIOR TO INSTALLING WASHWATER EQUALIZATION BASIN LINES INTO MANHOLE.
2. INVERT SHALL MATCH EXISTING 30" SANITARY SEWER.
3. FOR ORIENTATION SEE C SHEETS.
4. REFER TO MAG STANDARDS FOR ALL OTHER MANHOLE DETAILS.

MANHOLE PENETRATION

DETAIL	203
NOT TO SCALE	–

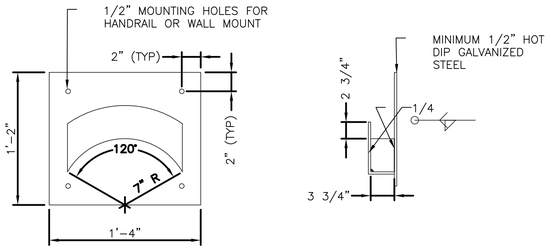

HOSE BIBB HOSE RACK

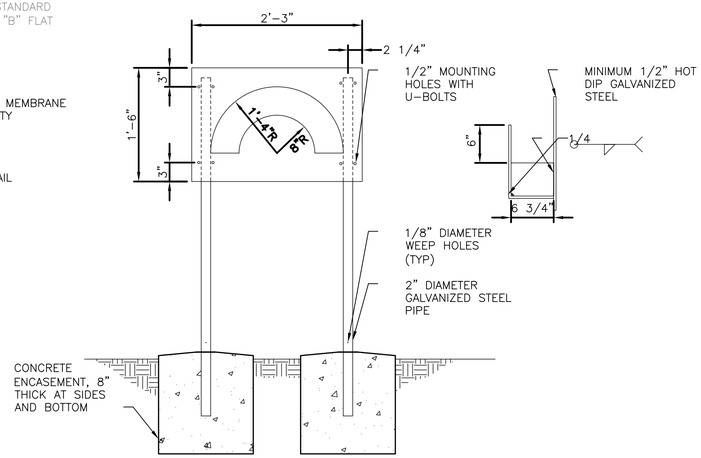

YARD HYDRANT HOSE RACK

DETAIL	204
NOT TO SCALE	–

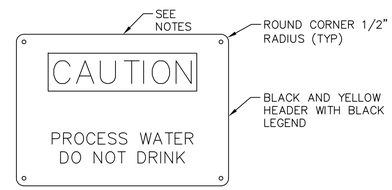

NOTES:
1. SIGN SHALL BE ALUMINUM, RESISTANT TO ULTRAVIOLET DETERIORATION.
2. SIGN SHALL BE 10"x14" AND SHALL CONFORM TO THE SPECIFICATION.
3. SIGN SHALL BE WALL OR HANDRAIL MOUNTED BASED ON LOCATION AND AS CLOSE AS POSSIBLE TO THE PLANT WATER YARD HYDRANT/HOSE BIBB.
4. SIGN SHALL BE MOUNTED TO PERMIT EASY READING.

YARD HYDRANT/HOSE BIBB SIGN DETAIL

DETAIL	205
NOT TO SCALE	–

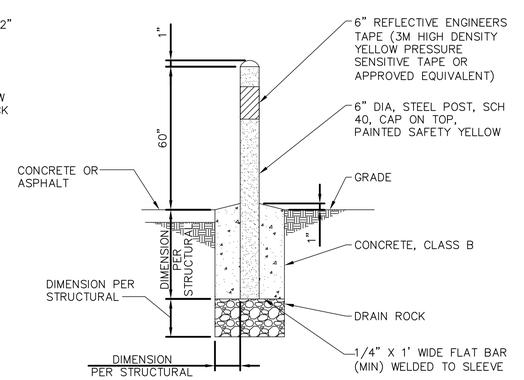

PIPE BOLLARD

DETAIL	206
NOT TO SCALE	–

1620 West Fountainhead Pkwy
Suite 501 85282
Tempe, Arizona
Phone: (480) 893-8860
Improving Arizona's Infrastructure Since 1942
WILSON ENGINEERS

CITY OF CHANDLER
RECLAIMED WATER INTERCONNECT FACILITY

CIVIL DETAILS – 2

CITY PROJECT NO. WW1901.203
WILSON PROJECT NO. 21007

Design: HA	Drawn: AJC	Checked: SR
Date: 02/2022	Wilson Project No.: 21007	

Rev#	Date	Description	By

VERIFY SCALES
BAR IS ONE INCH ON ORIGINAL DRAWING
0 1"
IF NOT ONE INCH ON THIS SHEET, ADJUST SCALES ACCORDINGLY





Sheet No. C-7.02

AGENCY REVIEW

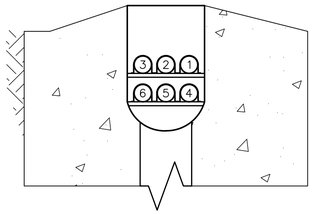

TRENCH SECTION A
NOT TO SCALE

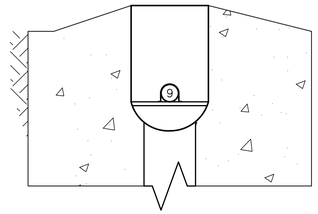

TRENCH SECTION B
NOT TO SCALE

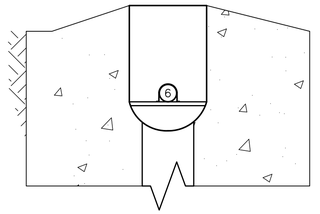

TRENCH SECTION C
NOT TO SCALE

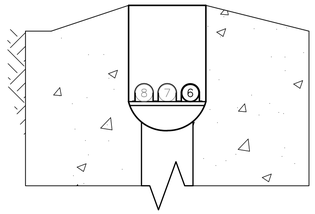

TRENCH SECTION D
NOT TO SCALE

NO.	FROM	TO	CONTENTS	SIZE	MATERIAL
1.	MFS CHEMICAL FACILITY	MFS FACILITY	SODIUM HYPOCHLORITE	1 1/2	SCHEDULE 80 CPVC
2.	MFS CHEMICAL FACILITY	MFS FACILITY	CITRIC ACID	1 1/2	SCHEDULE 80 CPVC
3.	MFS CHEMICAL FACILITY	MFS FACILITY	SULFURIC ACID	1/2	SCHEDULE 80 CPVC
4.	MFS CHEMICAL FACILITY	MFS FACILITY	SODIUM BISULFITE	3/4	SCHEDULE 80 CPVC
5.	MFS CHEMICAL FACILITY	MFS FACILITY	SODIUM HYDROXIDE	1 1/2	SCHEDULE 80 CPVC
6.	MODIFIED BULK SODIUM HYPOCHLORITE FEED FACILITY	MFS FACILITY	SODIUM HYPOCHLORITE	1/4	SCHEDULE 80 CPVC
7.	MODIFIED BULK SODIUM HYPOCHLORITE FEED FACILITY (EXISTING)	AWRF FILTER FACILITY	SODIUM HYPOCHLORITE	1	SCHEDULE 80 CPVC
8.	MODIFIED BULK SODIUM HYPOCHLORITE FEED FACILITY (EXISTING)	AWRF FILTER FACILITY	SODIUM HYPOCHLORITE	1	SCHEDULE 80 CPVC
9.	MFS CHEMICAL FACILITY	SELF-CLEANING STRAINERS	ACH	1/4	SCHEDULE 80 CPVC

TRENCH PIPE SCHEDULE

NOTE:

1. SEE STRUCTURAL SHEETS FOR CHEMICAL PIPING TRENCH DIMENSION DETAILS.

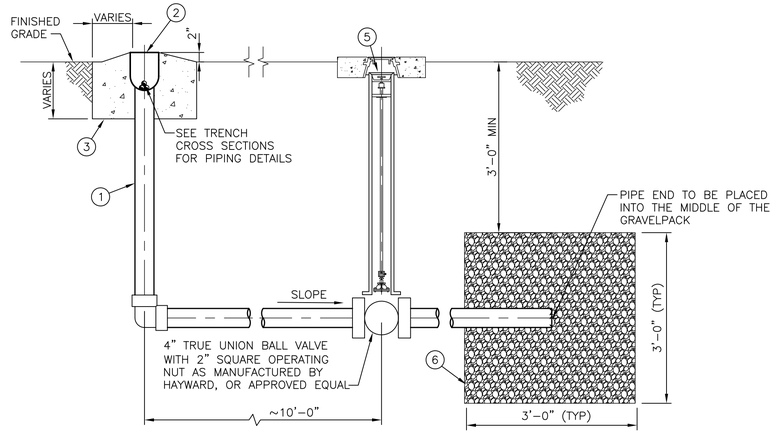

NOTES:

1. TRENCH SHALL BE FIBERGLASS OR PRE-CAST POLYMER CONCRETE UTILIZING VINYL ESTER RESIN.
2. GRATING SHALL BE DUCTILE IRON WITH SOLID SURFACE AND DESIGNED FOR A CLASS 'D' LOAD PER DIN 19580. GRATING SHALL ATTACH TO TRENCH UTILIZING STAINLESS STEEL LOCK DOWN BOLTS.
3. TRENCH SHALL SLOPE AT 0.5% (MINIMUM) TOWARD DRAIN LINES. SLOPE MAY BE ACCOMPLISHED BY NATURAL GRADE OR BY USE OF SLOPED TRENCHES. AT NO POINT SHALL THE INVERT OF THE TRENCH BE LESS THAN 7 INCHES BELOW SOLID GRATE.
4. MANUFACTURER SHALL BE ACO OR EQUAL. CHEMICAL TRENCH SYSTEM LAND LAY DRAWINGS TO BE SUBMITTED TO ENGINEER FOR APPROVAL.
5. PROVIDE TELESCOPING EXPANSION JOINT WITH 6" TRAVEL WITH EPDM O-RINGS MANUFACTURED BY GF PIPING SYSTEMS OR EQUAL. INSTALL EXPANSION JOINTS EVERY 100' MINIMUM, AT BENDS, AT PENETRATIONS AND AS NEEDED.
6. PROVIDE UNISTRUT PIPE SUPPORTS, MODEL P7000 SERIES OR EQUAL ON SIDES AND/OR BOTTOM OF TRENCH AT 5'-0" INTERVALS. PROVIDE AT LEAST 1" CLEAR PATH ALONG BOTTOM OF TRENCH TO ALLOW FOR DRAINAGE.

DETAIL 301
NOT TO SCALE -

KEYED NOTES

1. 4" SCHEDULE 80 CPVC DRAIN LINE
2. PRECAST CHEMICAL TRENCH WITH COVER AS SPECIFIED IN DETAILS 1 NOTES
3. TRENCH TO BE CAST INTO CONCRETE, EXTENT OF CONCRETE TO BE DETERMINED BY TRENCH MANUFACTURER BASED ON LOADING CLASS C PER DIN 19580
4. TRENCH DRAINLINE AND GRAVEL PACK TO BE PLACED AT 100' (MAXIMUM) INTERVALS LOCATIONS TO BE APPROVED BY ENGINEER
5. INSTALL VALVE BOX AND COVER PER CHANDLER STANDARD DETAIL C-307
6. GRAVEL PACK SHALL CONTAIN ROCK MATERIAL NO LESS THAN 1" DIA AND NO GREATER THAN 3" IN DIA

1620 West Fountainhead Pkwy
Suite 501 85282
Tempe, Arizona
Phone: (480) 893-8860
Improving Arizona's Infrastructure Since 1942
WILSON ENGINEERS

CITY OF CHANDLER
RECLAIMED WATER INTERCONNECT FACILITY

CIVIL DETAILS - 3

CITY PROJECT NO. WW1901.203
WILSON PROJECT NO. 21007

Design: KP	Drawn: JMJ	Checked: SR
Date: 02/2022	Wilson Project No.: 21007	

Rev#	Date	Description	By

VERIFY SCALES
BAR IS ONE INCH ON ORIGINAL DRAWING
0 1"
IF NOT ONE INCH ON THIS SHEET, ADJUST SCALES ACCORDINGLY

Professional Engineer CERTIFICATE NO. 30185 UDAY K. GANDHE State of ARIZONA U. S. A.

Professional Engineer CERTIFICATE NO. 41008 SREERAM RENGARAJ State of ARIZONA U. S. A.

Sheet No. C-7.03

G:\PROJECT\21007\CADD\DESIGN\CIVIL\21007C7.03.DWG, 2/25/2022 4:31:21 PM, acantella, 1:2.1887

AGENCY REVIEW

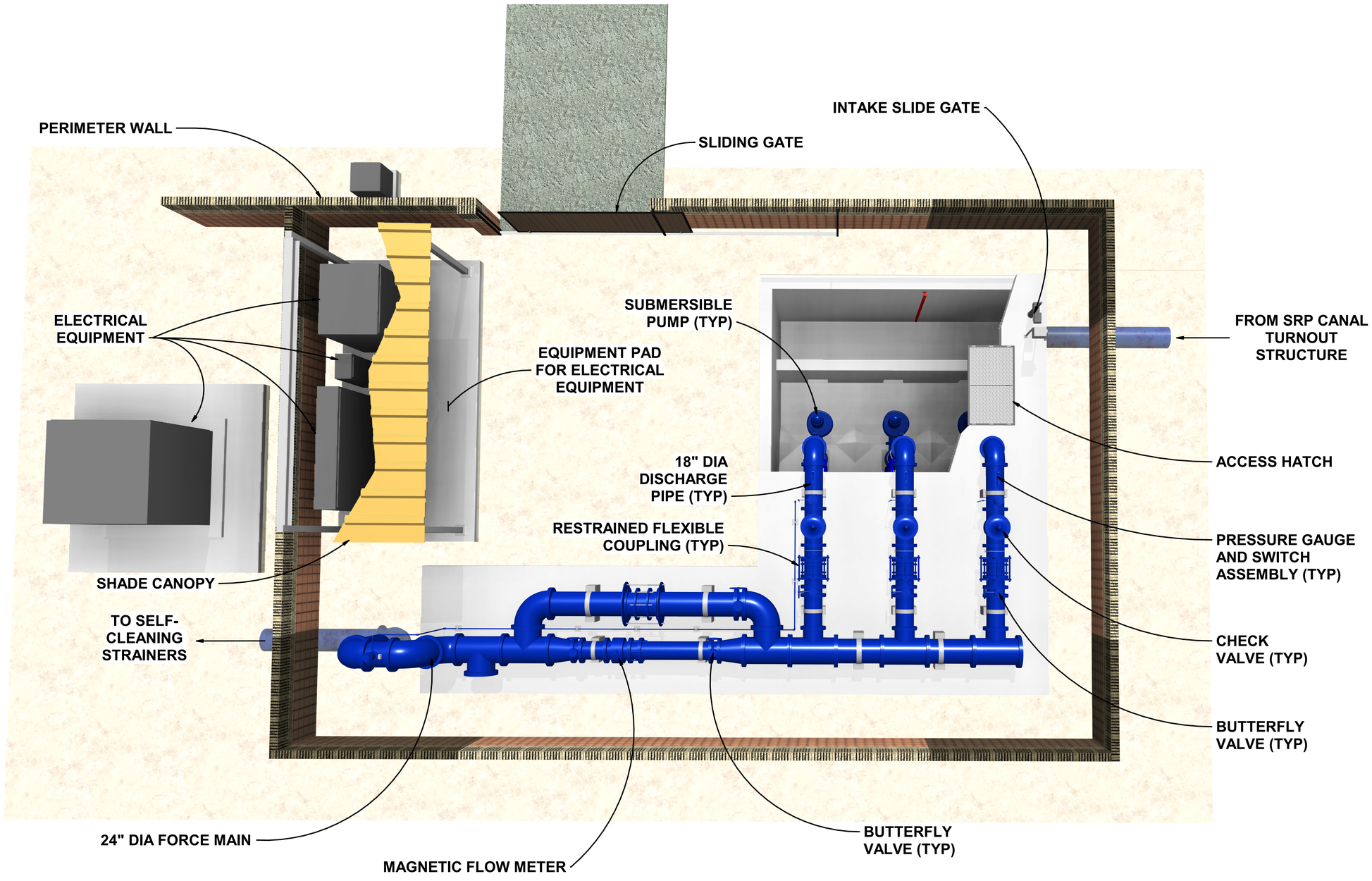

NOTES:

1. ELECTRICAL EQUIPMENT AND SHADE CANOPY PARTIALLY SHOWN FOR CLARITY.
2. TOP OF WET WELL PARTIALLY SHOWN FOR CLARITY.

1620 West Fountainhead Pkwy
Suite 501
Tempe, Arizona 85282
Phone: (480) 893-8860

Improving Arizona's Infrastructure Since 1942

WILSON ENGINEERS

CITY OF CHANDLER
RECLAIMED WATER INTERCONNECT FACILITY

RAW WATER PUMP STATION RENDERING - 1

CITY PROJECT NO. WW1901.203
WILSON PROJECT NO. 21007

Design: KP	Drawn: JMJ	Checked: SR
Date: 02/2022	Wilson Project No. 21007	

Rev#	Date	Description	By

VERIFY SCALES
BAR IS ONE INCH ON ORIGINAL DRAWING
0 1"
IF NOT ONE INCH ON THIS SHEET, ADJUST SCALES ACCORDINGLY

Registered Professional Engineer (Civil) CERTIFICATE NO. 30185 UDAY K. GANDHE Date Signed 02/28/2022 ARIZONA U. S. A.

Registered Professional Engineer (Civil) CERTIFICATE NO. 41008 SHEEKAM RENGARAJ Date Signed 02/28/2022 ARIZONA U. S. A.

Sheet No. M-1.01

2/28/2022 4:40:45 PM G:\PROJECT_Revit\05 Chandler Airport WRF\21007\5.0 Raw Water Pump Station.rvt

AGENCY REVIEW

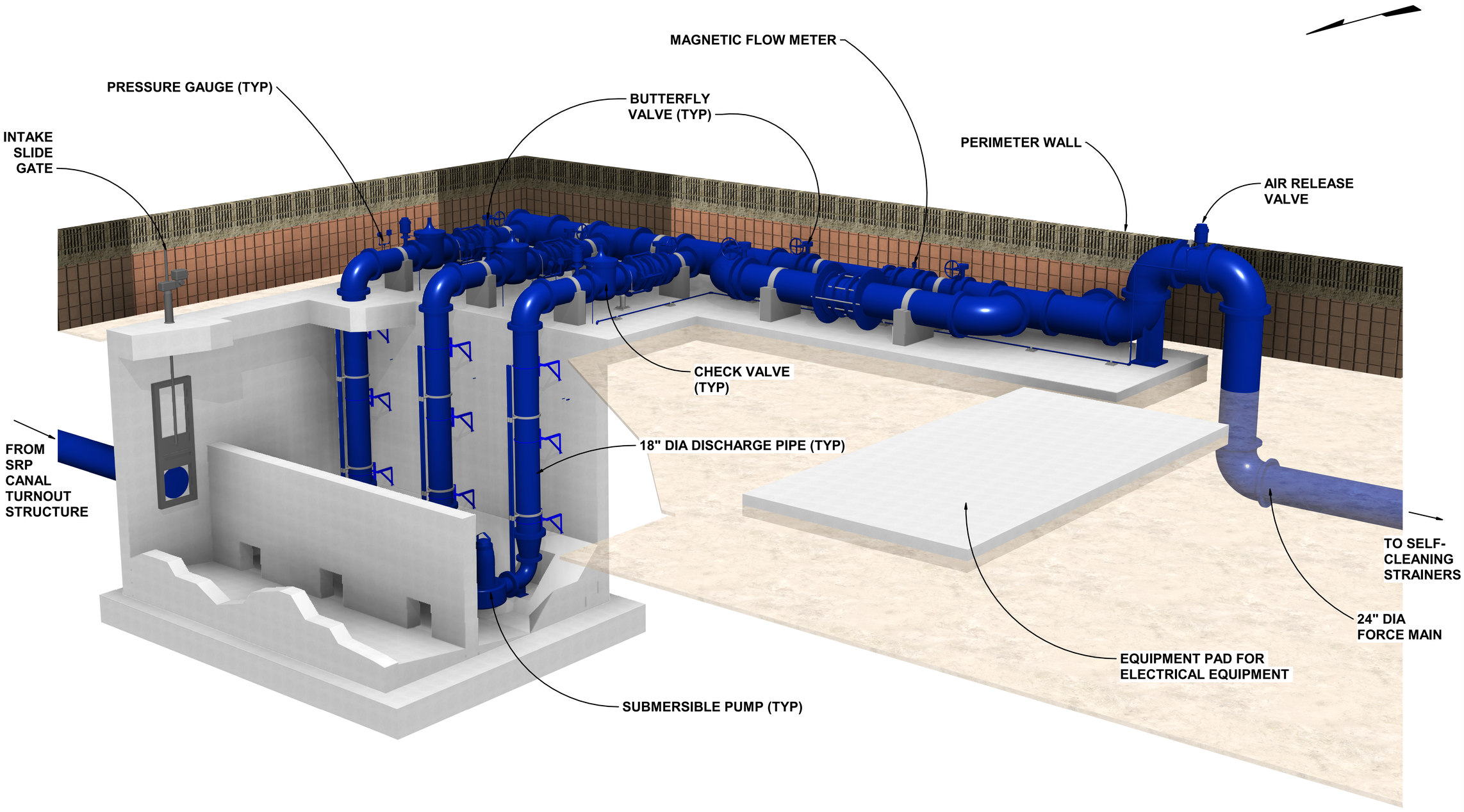

NOTES:

1. PERIMETER WALL PARTIALLY SHOWN FOR CLARITY.
2. ELECTRICAL EQUIPMENT AND SHADE CANOPY NOT SHOWN FOR CLARITY.
3. WET WELL WALLS PARTIALLY SHOWN FOR CLARITY.

1620 West Fountainhead Pkwy
Suite 501
Tempe, Arizona 85282
Phone: (480) 893-8860

Improving Arizona's Infrastructure Since 1942

WILSON ENGINEERS

CITY OF CHANDLER
RECLAIMED WATER INTERCONNECT FACILITY

RAW WATER PUMP STATION RENDERING - 2

CITY PROJECT NO.WW1901.203
WILSON PROJECT NO. 21007

Design: **KP** Date: **02/2022** | Drawn: **JMJ** Wilson Project No. **21007** | Checked: **SR**

Rev#	Date	Description	By

VERIFY SCALES
BAR IS ONE INCH ON ORIGINAL DRAWING
0 1"
IF NOT ONE INCH ON THIS SHEET, ADJUST SCALES ACCORDINGLY

Registered Professional Engineer (Civil)
CERTIFICATE NO
30185
UDAY K. GANDHE
Date Signed: 03/28/2022

Registered Professional Engineer (Civil)
CERTIFICATE NO
41008
SREERAM RENGARAJ
Date Signed: 03/28/2022

Sheet No. **M-1.02**

2/25/2022 10:47:56 AM \\phxss01\Data\PROJECT_Revit\05 Chandler Airport WRF\21007\5.0 Raw Water Pump Station.rvt

AGENCY REVIEW

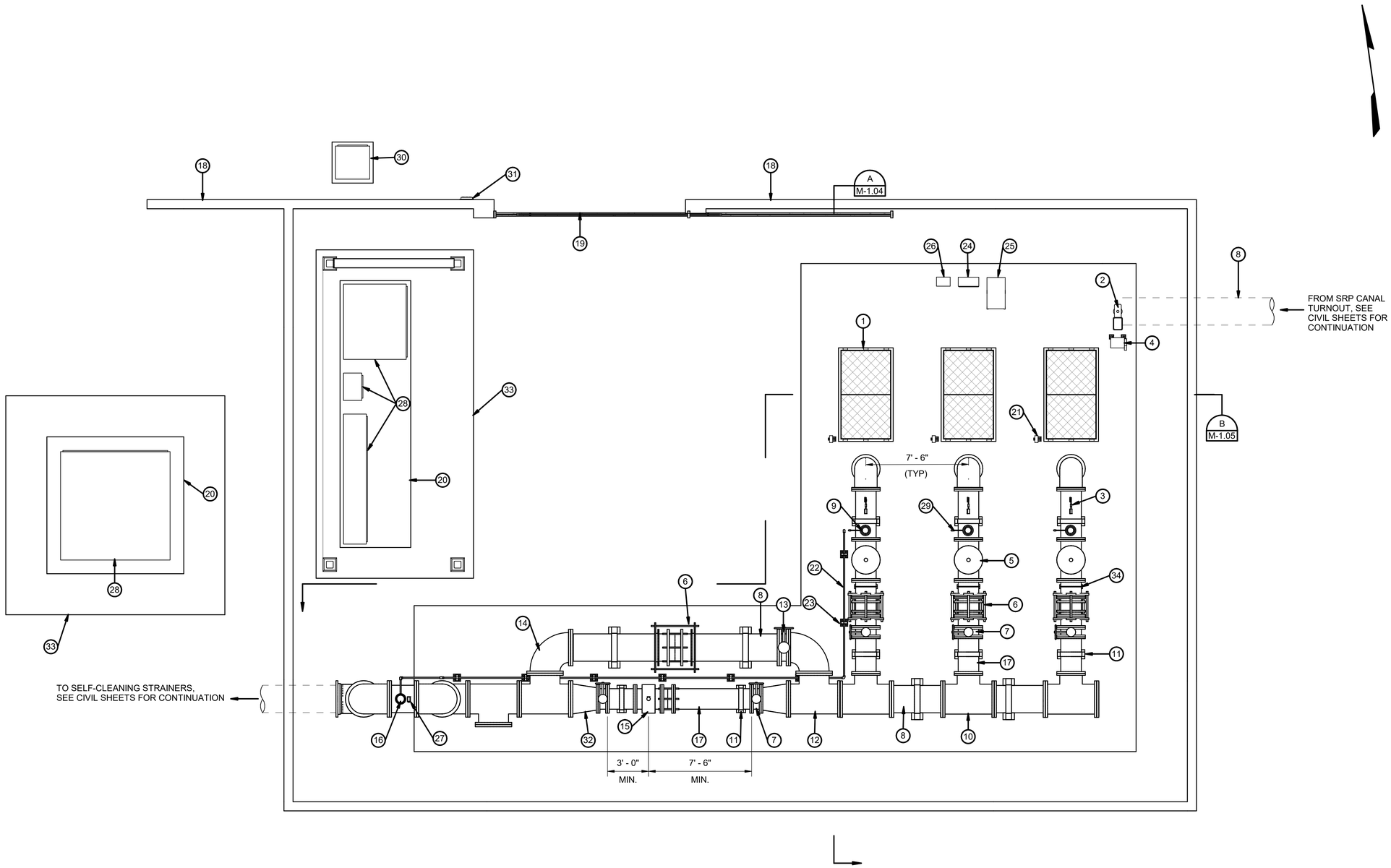

UPPER PLAN

1/4" = 1'-0"

NOTE:

1. SHADE CANOPY ABOVE ELECTRICAL EQUIPMENT NOT SHOWN FOR CLARITY, SEE STRUCTURAL SHEETS FOR DETAILS.

KEYED NOTES

1. 3'-6"W X 6'-6"L ACCESS HATCH (TYP)
2. 2'-0"W X 2'-0"H SLIDE GATE WITH MOTORIZED ACTUATOR, SEE ELECTRICAL SHEETS FOR DETAILS
3. PRESSURE GAUGE AND SWITCH ASSEMBLY (TYP), SEE DETAIL 302 SHEET M-7.03
4. INLET SLIDE GATE ACTUATOR DISCONNECT SWITCH, SEE ELECTRICAL SHEETS FOR DETAILS
5. 18" DIA SWING CHECK VALVE (TYP)
6. RESTRAINED FLEXIBLE COUPLING (TYP), SEE DETAIL 304 SHEET M-7.03
7. 18" DIA BUTTERFLY VALVE (TYP)
8. 24" RGRCP RAW WATER PIPE
9. 3" DIA COMBINATION AIR/VACUUM VALVE (TYP), SEE DETAIL 403 SHEET M-7.04
10. 18" X 24" TEE (TYP)
11. CONCRETE PIPE SUPPORT (TYP), SEE STRUCTURAL SHEETS FOR DETAILS
12. 24" X 24" TEE (TYP)
13. 24" DIA BUTTERFLY VALVE
14. 24" DIA 90 DEGREE BEND (TYP)
15. 18" DIA MAGNETIC FLOW METER
16. 4" DIA COMBINATION AIR/VACUUM VALVE, SEE DETAIL 502 SHEET M-7.05
17. 18" DIA DIP RAW WATER PIPE
18. PERIMETER 6'-0" HIGH MASONRY WALL, SEE ARCHITECTURAL SHEETS FOR DETAILS
19. ROLLING GATE, SEE ARCHITECTURAL SHEETS FOR DETAILS
20. ELECTRICAL EQUIPMENT PAD, SEE STRUCTURAL SHEETS FOR DETAILS
21. SUBMERSIBLE PUMP EMERGENCY STOP (TYP), SEE ELECTRICAL SHEETS FOR DETAILS
22. 1" DIA COMBINATION AIR/VACUUM VALVE DRAIN LINE
23. PIPE SUPPORT, SEE DETAIL 702 SHEET M-7.07
24. LEVEL INDICATOR TRANSMITTER, SEE ELECTRICAL SHEETS FOR DETAILS
25. LEVEL LOCAL CONTROL PANEL, SEE ELECTRICAL SHEETS FOR DETAILS
26. TURBIDITY ANALYZER, SEE ELECTRICAL SHEETS FOR DETAILS
27. FLOW SWITCH, SEE ELECTRICAL SHEETS FOR DETAILS
28. ELECTRICAL EQUIPMENT, SEE ELECTRICAL SHEETS FOR DETAILS
29. 1/2" DIA COMBINATION AIR/VACUUM VALVE DRAIN LINE (TYP)
30. PORTABLE GENERATOR CONNECTION CABINET, SEE ELECTRICAL SHEETS FOR DETAILS
31. ROLLING GATE KEY PAD
32. 24" X 18" ECCENTRIC REDUCER (TYP)
33. CONCRETE PAD ON GRADE, SEE STRUCTURAL SHEETS FOR DETAILS
34. ADJUSTABLE PIPE SUPPORT, SEE DETAIL 404 SHEET M-7.04

1620 West Fountainhead Pkwy
Suite 501
Tempe, Arizona 85282
Phone: (480) 893-8860

Improving Arizona's Infrastructure Since 1942

WILSON ENGINEERS

CITY OF CHANDLER
RECLAIMED WATER INTERCONNECT FACILITY

RAW WATER PUMP STATION
UPPER PLAN VIEW

CITY PROJECT NO. WW1901.203
WILSON PROJECT NO. 21007

Design: KP	Drawn: JMJ	Checked: SR
Date: 02/2022	Wilson Project No. 21007	

Rev#	Date	Description	By

VERIFY SCALES
BAR IS ONE INCH ON ORIGINAL DRAWING
0 1"
IF NOT ONE INCH ON THIS SHEET, ADJUST SCALES ACCORDINGLY

Registered Professional Engineer (Civil)
CERTIFICATE NO. 30185
UDAY K. GANDHE
Date Signed 02/28/2022
ARIZONA U. S. A.

Registered Professional Engineer (Civil)
CERTIFICATE NO. 41008
SHEEKAM RENGHRAJ
Date Signed 02/28/2022
ARIZONA U. S. A.

Sheet No. M-1.03

2/25/2022 3:07:16 PM G:\PROJECT_Revit\05 Chandler Airport WRF\21007\5.0 Raw Water Pump Station.rvt

AGENCY REVIEW

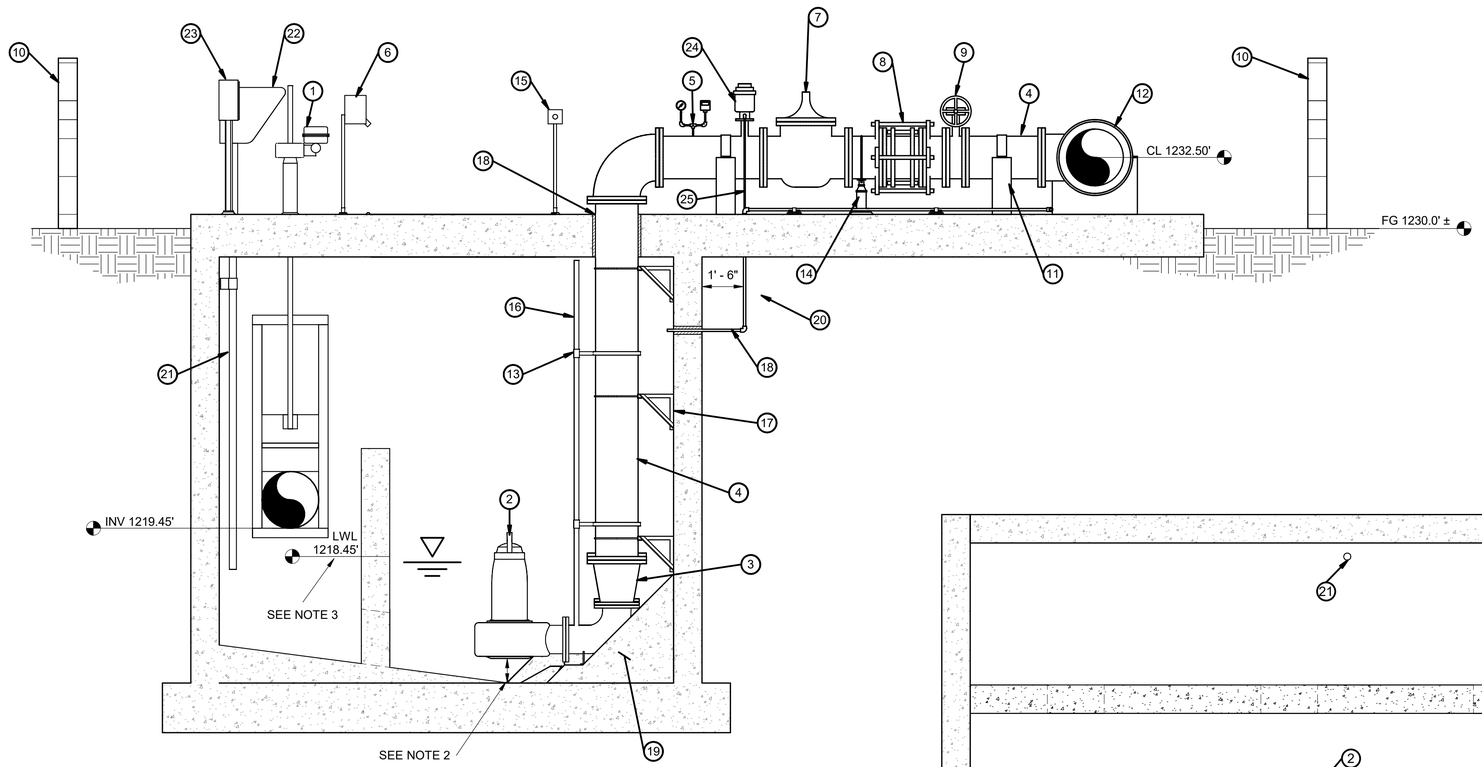

SECTION A M-1.03
3/8" = 1'-0"

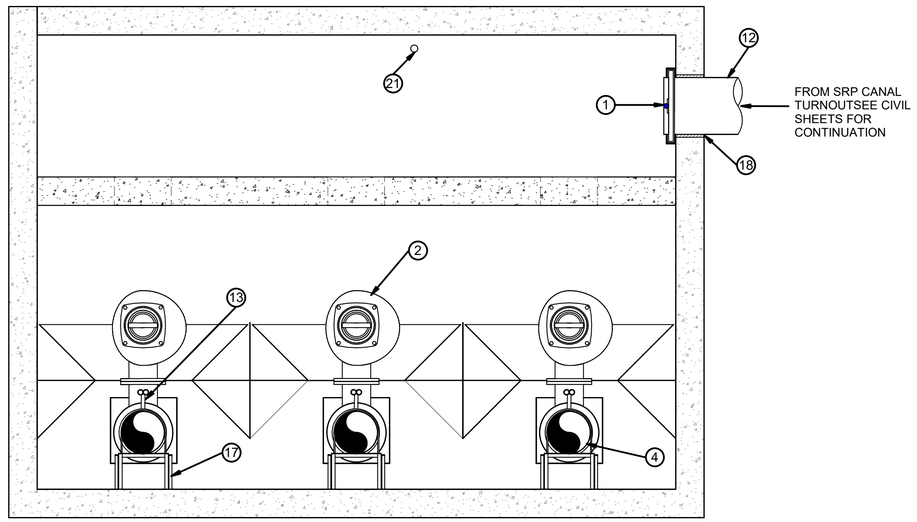

LOWER PLAN
3/8" = 1'-0"

KEYED NOTES

1. 2'-0" X 2'-0" SLIDE GATE WITH MOTORIZED ACTUATOR, SEE ELECTRICAL SHEETS FOR DETAILS
2. SUBMERSIBLE PUMP (TYP)
3. 18" x 12" REDUCER
4. 18" DIA DIP RAW WATER PIPE
5. PRESSURE GAUGE AND SWITCH ASSEMBLY, SEE DETAIL 302 SHEET M-7.03
6. INLET SLIDE GATE ACTUATOR DISCONNECT SWITCH, SEE ELECTRICAL SHEETS FOR DETAILS
7. 18" DIA SWING CHECK VALVE (TYP)
8. RESTRAINED FLEXIBLE COUPLING (TYP), SEE DETAIL 304 SHEET M-7.03
9. 18" DIA BUTTERFLY VALVE (TYP)
10. PERIMETER 6'-0" HIGH CMU WALL SEE ARCHITECTURAL SHEETS FOR DETAILS
11. CONCRETE PIPE SUPPORT (TYP), SEE STRUCTURAL SHEETS FOR DETAILS
12. 24" DIA RGRCP RAW WATER PIPE
13. GUIDE RAIL SUPPORT PER PUMP MANUFACTURER (TYP)
14. ADJUSTABLE PIPE SUPPORT, SEE DETAIL 404 SHEET M-7.04
15. SUBMERSIBLE PUMP EMERGENCY STOP, SEE ELECTRICAL SHEETS FOR DETAILS
16. PUMP GUIDE RAIL
17. STAINLESS STEEL VERTICAL PIPE SUPPORT (TYP), SEE DETAIL 505 SHEET M-7.05
18. 24" DIA RCP CONNECTION, SEE DETAIL 306 SHEET M-7.03
19. CONCRETE FILL SLOPE, EXTENT OF SLOPE AND FILLETS PER PUMP MANUFACTURER RECOMMENDATIONS, SEE STRUCTURAL SHEETS FOR DETAILS
20. 1" DIA COMBINATION AIR/VACUUM VALVE DRAIN LINE
21. TURBIDITY ANALYZER, SEE ELECTRICAL SHEETS FOR DETAILS
22. LEVEL LOCAL CONTROL PANEL. SEE ELECTRICAL SHEETS FOR DETAILS
23. TURBIDITY ANALYZER PANEL, SEE ELECTRICAL SHEETS FOR DETAILS
24. 3" DIA COMBINATION AIR/VACUUM VALVE (TYP), SEE DETAIL 403 SHEET M-7.04
25. 1/2" DIA COMBINATION AIR/VACUUM VALVE DRAIN LINE

NOTES:

1. PERIMETER WALL HIDDEN FOR CLARITY.
2. ELEVATION AS RECOMMENEDED BY PUMP MANUFACTURER.
3. LOW LEVEL SHUT OFF ELEVATION PER PUMP MANUFACUTURER'S RECOMMENDATIONS.

1620 West Fountainhead Pkwy
Suite 501
Tempe, Arizona 85282
Phone: (480) 893-8860

Improving Arizona's Infrastructure Since 1942

WILSON ENGINEERS

CITY OF CHANDLER
RECLAIMED WATER INTERCONNECT FACILITY

RAW WATER PUMP STATION PLAN, SECTION AND DETAILS - 1

CITY PROJECT NO. WW1901.203
WILSON PROJECT NO. 21007

Design: **KP** Date: **02/2022**
Drawn: **JMJ** Checked: **SR**
Wilson Project No. **21007**

Rev#	Date	Description	By

VERIFY SCALES
BAR IS ONE INCH ON ORIGINAL DRAWING
0 1"
IF NOT ONE INCH ON THIS SHEET, ADJUST SCALES ACCORDINGLY

Registered Professional Engineer
30185
UDAY K. GANDHE
Date Signed 02/28/2022
ARIZONA U.S.A.

Registered Professional Engineer
CERTIFICATE NO.
41086
PREMRAM RENGHRAJ
Date Signed 02/28/2022
ARIZONA U.S.A.

Sheet No. **M-1.04**

AGENCY REVIEW

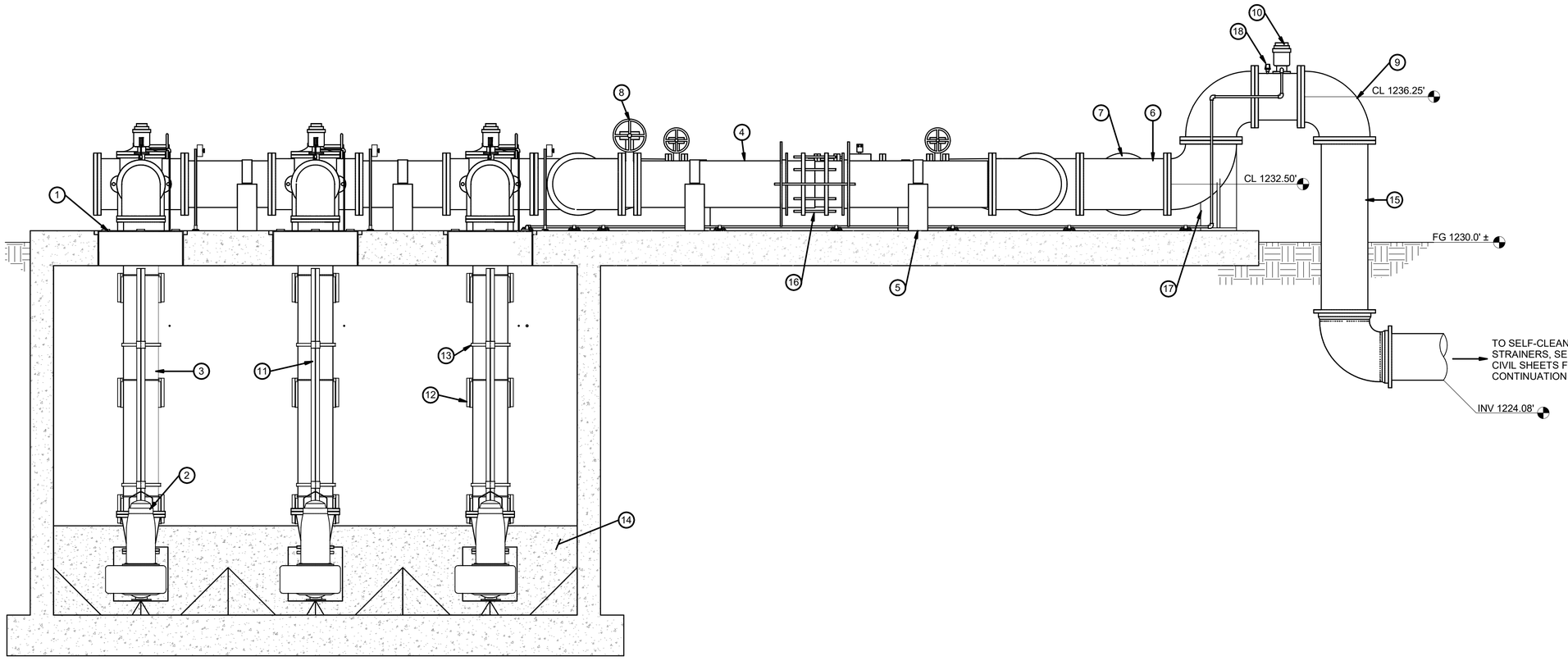

SECTION B M-1.03
3/8" = 1'-0"

NOTE:

1. PERIMETER WALL NOT SHOWN FOR CLARITY.

KEYED NOTES

1. 3'-6" W X 6'-6" L ACCESS HATCH (TYP)
2. SUBMERSIBLE PUMP (TYP)
3. 18" DIA DIP RAW WATER PIPE
4. 24" DIA DIP RAW WATER PIPE
5. CONCRETE PIPE SUPPORT (TYP), SEE STRUCTURAL SHEETS FOR DETAILS
6. 24" X 24" TEE (TYP)
7. BLIND FLANGE (TYP)
8. 24" DIA BUTTERFLY VALVE
9. 24" DIA DIP 90 DEGREE BEND (TYP)
10. 4" DIA COMBINATION AIR/VACUUM VALVE (TYP), SEE DETAIL 502 SHEET M-7.05
11. PUMP GUIDE RAIL
12. STAINLESS STEEL VERTICAL PIPE SUPPORT (TYP), SEE DETAIL 505 SHEET M-7.05
13. GUIDE RAIL SUPPORT PER PUMP MANUFACTURER (TYP)
14. CONCRETE FILL SLOPE, EXTENT OF SLOPE AND FILLETS PER PUMP MANUFACTURER RECOMMENDATIONS, SEE STRUCTURAL SHEETS FOR DETAILS
15. 24" DIA DIP MJ X FL SPOOL PIECE
16. RESTRAINED FLEXIBLE COUPLING, SEE DETAIL 304 SHEET M-7.03
17. PIPE SUPPORT (TYP), SEE DETAIL 303 SHEET M-7.03
18. FLOW SWITCH, SEE ELECTRICAL SHEETS FOR DETAILS

1620 West Fountainhead Pkwy
Suite 501
Tempe, Arizona 85282
Phone: (480) 893-8860
Improving Arizona's Infrastructure Since 1942

WILSON ENGINEERS

CITY OF CHANDLER
RECLAIMED WATER INTERCONNECT FACILITY

RAW WATER PUMP STATION SECTION AND DETAILS - 2

CITY PROJECT NO. WW1901.203
WILSON PROJECT NO. 21007

Design: **KP** | Drawn: **JMJ** | Checked: **SR**
Date: **02/2022** | Wilson Project No. **21007**

Rev#	Date	Description	By

VERIFY SCALES
BAR IS ONE INCH ON ORIGINAL DRAWING
0 1"
IF NOT ONE INCH ON THIS SHEET, ADJUST SCALES ACCORDINGLY

Registered Professional Engineer — CERTIFICATE NO. — Date Signed: 02/28/2022 — ARIZONA U. S. A.
30185
UDAY K. GANDHE

Registered Professional Engineer — CERTIFICATE NO. — Date Signed: 02/28/2022 — ARIZONA U. S. A.
41080
SRIRAM RENGARAJ

Sheet No. **M-1.05**

AGENCY REVIEW

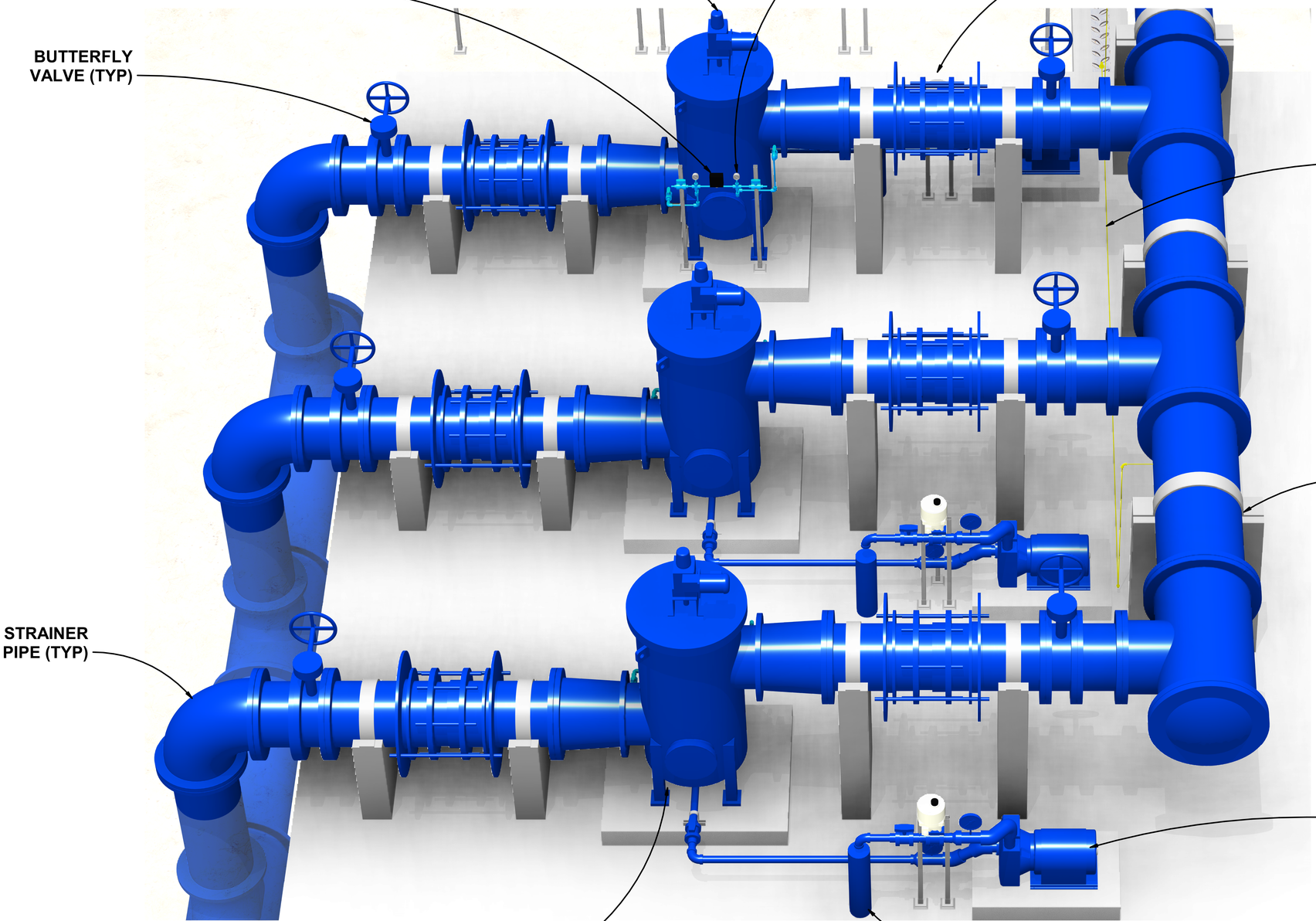

NOTE:

1. SHADE CANOPY NOT SHOWN FOR CLARITY.

1620 West Fountainhead Pkwy
Suite 501
Tempe, Arizona 85282
Phone: (480) 893-8860

Improving Arizona's Infrastructure Since 1942

WILSON ENGINEERS

CITY OF CHANDLER
RECLAIMED WATER INTERCONNECT FACILITY

SELF-CLEANING STRAINERS RENDERING - 1

CITY PROJECT NO.WW1901.203
WILSON PROJECT NO. 21007

Design: **KP** | Drawn: **JMJ** | Checked: **SR**
Date: **02/2022** | Wilson Project No. **21007**

Rev#	Date	Description	By

VERIFY SCALES

BAR IS ONE INCH ON ORIGINAL DRAWING

0 1"

IF NOT ONE INCH ON THIS SHEET, ADJUST SCALES ACCORDINGLY

Registered Professional Engineer
30185
UDAY K. GANDHE
Date signed 02/28/2022
ARIZONA U. S. A.

Registered Professional Engineer (Civil)
CERTIFICATE
SRIRAM RENGARAJ
Date signed 02/28/2022
ARIZONA U. S. A.

Sheet No. **M-1.21**

2/25/2022 4:04:17 PM \\phxss01\Data\PROJECT_Revit\05 Chandler Airport WRF\21007\1.0 Membrane Structure.rvt

AGENCY REVIEW

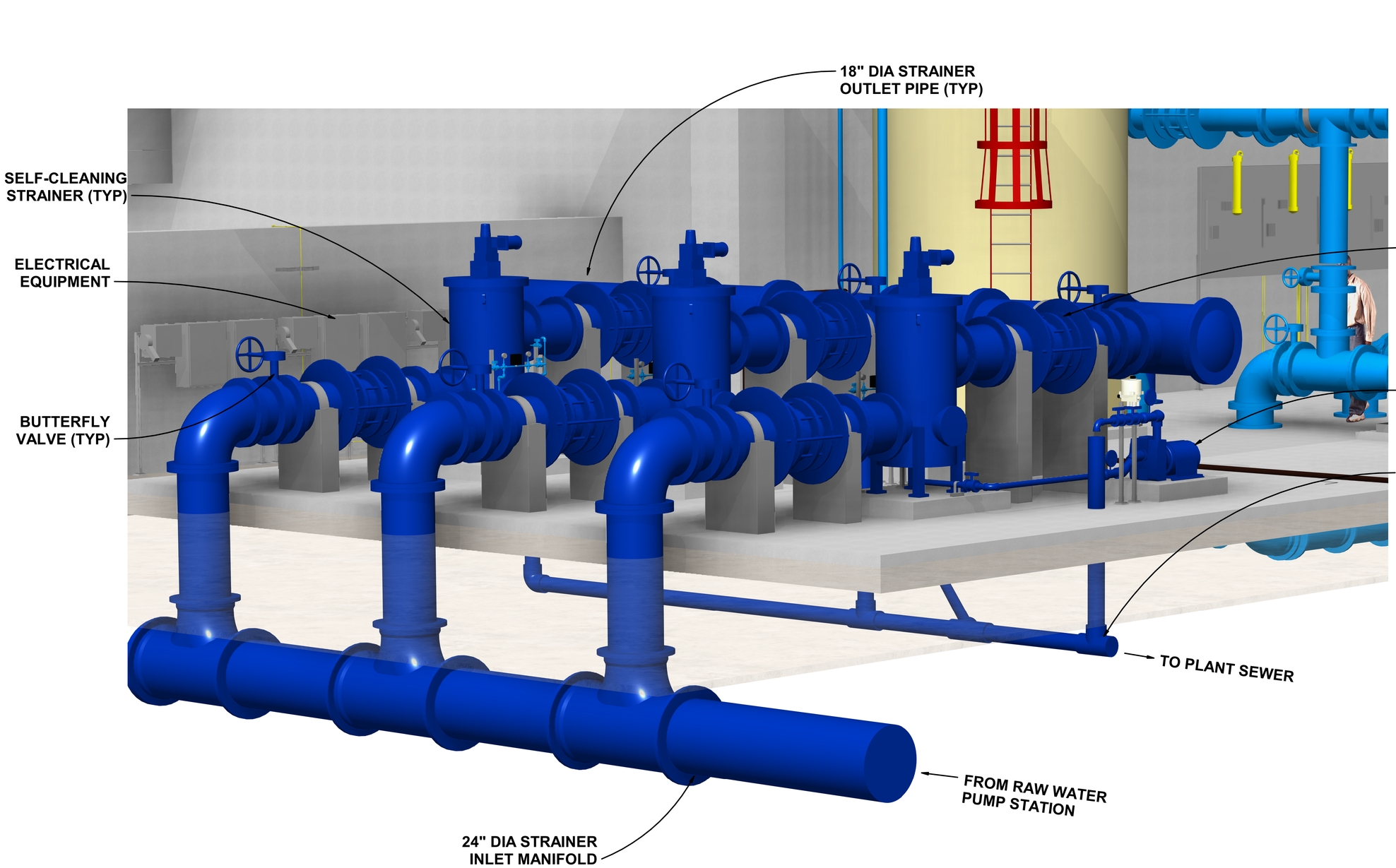

NOTE:

1. SHADE CANOPY NOT SHOWN FOR CLARITY.

1620 West Fountainhead Pkwy
Suite 501
Tempe, Arizona 85282
Phone: (480) 893-8860

Improving Arizona's
Infrastructure Since 1942

WILSON ENGINEERS

CITY OF CHANDLER
RECLAIMED WATER INTERCONNECT FACILITY

SELF-CLEANING STRAINERS RENDERING - 2

CITY PROJECT NO. WW1901.203
WILSON PROJECT NO. 21007

Design: **KP** | Drawn: **JMJ** | Checked: **SR**
Date: **02/2022** | Wilson Project No. **21007**

Rev#	Date	Description	By

VERIFY SCALES
BAR IS ONE INCH ON ORIGINAL DRAWING
0 1"
IF NOT ONE INCH ON THIS SHEET, ADJUST SCALES ACCORDINGLY

Registered Professional Engineer (Civil)
30185
UDAY K. GANDHE
Date Signed 02/28/2022
ARIZONA U. S. A.

Registered Professional Engineers (Civil)
41044
SREERAM RENGARAJ
Date Signed 02/28/2022
ARIZONA U. S. A.

Sheet No. **M-1.22**

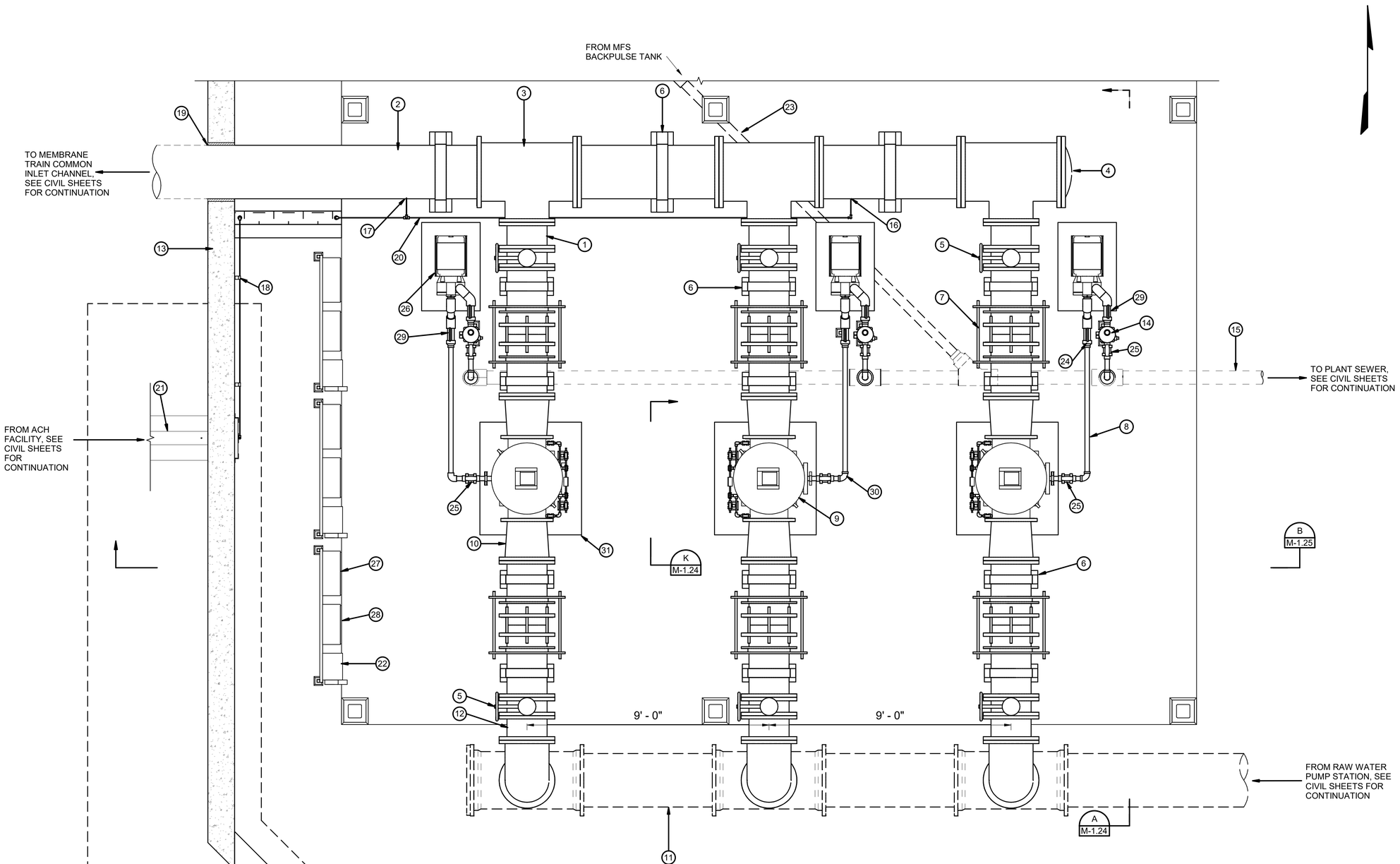

STRAINERS OVERALL PLAN

1/2" = 1'-0"

NOTE:

1. SHADE CANOPY NOT SHOWN FOR CLARITY.

KEYED NOTES

1. 18" DIA DIP STRAINER OUTLET PIPE
2. 24" DIA DIP STRAINER OUTLET MANIFOLD
3. 18" X 24" TEE (TYP)
4. BLIND FLANGE (TYP)
5. 18" DIA BUTTERFLY VALVE (TYP)
6. CONCRETE PIPE SUPPORT (TYP), SEE STRUCTURAL SHEETS FOR DETAL
7. 18" DIA RESTRAINED FLEXIBLE COUPLING (TYP), SEE DETAIL 304 SHEET M-7.03
8. 2" DIA CPVC SELF-CLEANING STRAINERS BACKWASH DRAIN PIPE
9. SELF-CLEANING STRAINER (TYP)
10. 18" X 16" REDUCER (TYP)
11. 24" DIA DIP STRAINER INLET MANIFOLD
12. 18" DIA DIP STRAINER INLET PIPE
13. RETAINING WALL, SEE STRUCTURAL SHEETS FOR DETAILS
14. 2" DIA ELECTRICALLY ACTUATED BALL VALVE (TYP)
15. 6" DIA CPVC COMMON BACKWASH DRAIN PIPE
16. 1" DIA CPVC CHEMICAL PIPE AND INJECTION QUILL - ACH COAGULANT DOSAGE POINT NO. 1, SEE DETAIL 605 SHEET M-7.06
17. 1" DIA CPVC CHEMICAL PIPE AND INJECTION QUILL - ACH COAGULANT DOSAGE POINT NO. 2, SEE DETAIL 605 SHEET M-7.06
18. FLUSH MOUNT PIPE SUPPORT (TYP), DETAIL 203 SHEET M-7.02
19. PIPE PENETRATION, SEE DETAIL 103 SHEET M-7.01
20. 1/4" DIA CPVC ACH PIPE
21. ACH CHEMICAL CONTAINMENT TRENCH (TYP) SEE CIVIL SHEETS FOR DETAILS
22. SELF CLEANING STRAINER DISCONNECT SWITCH (TYP), SEE ELECTRICAL SHEETS FOR DETAILS
23. 4" DIA CPVC MFS BACKPULSE TANK DRAIN PIPE
24. 3" X 2" REDUCER
25. 2" DIA BALL VALVE (TYP)
26. BACKWASH ASSIST PUMP (TYP)
27. VENDOR SUPPLIED CONTROL PANEL (TYP), SEE ELECTRICAL SHEETS FOR DETAILS
28. MOTOR CONTROL PANEL (TYP), SEE ELECTRICAL SHEETS FOR DETAILS
29. PRESSURE GAUGE (TYP), SEE DETAIL 406 SHEET M-7.04
30. 2" DIA CPVC 90 DEGREE BEND (TYP)
31. CONCRETE EQUIPMENT PAD (TYP), SEE STRUCTURAL SHEETS FOR DETAILS

1620 West Fountainhead Pkwy
Suite 501
Tempe, Arizona 85282
Phone: (480) 893-8860

Improving Arizona's Infrastructure Since 1942

WILSON ENGINEERS

CITY OF CHANDLER
RECLAIMED WATER INTERCONNECT FACILITY

SELF-CLEANING STRAINERS OVERALL PLAN

CITY PROJECT NO. WW1901.203
WILSON PROJECT NO. 21007

Design: KP	Drawn: JMJ	Checked: SR
Date: 02/2022	Wilson Project No. 21007	

Rev#	Date	Description	By

VERIFY SCALES

BAR IS ONE INCH ON ORIGINAL DRAWING

0 1"

IF NOT ONE INCH ON THIS SHEET, ADJUST SCALES ACCORDINGLY

Registered Professional Engineer (Civil) CERTIFICATE NO. 30185 UDAY K. GANDHE Date Signed 02/28/2022 ARIZONA U.S.A.

Registered Professional Engineer (Civil) CERTIFICATE NO. 41684 SREERAM RENGARAJ Date Signed 02/28/2022 ARIZONA U.S.A.

Sheet No. **M-1.23**

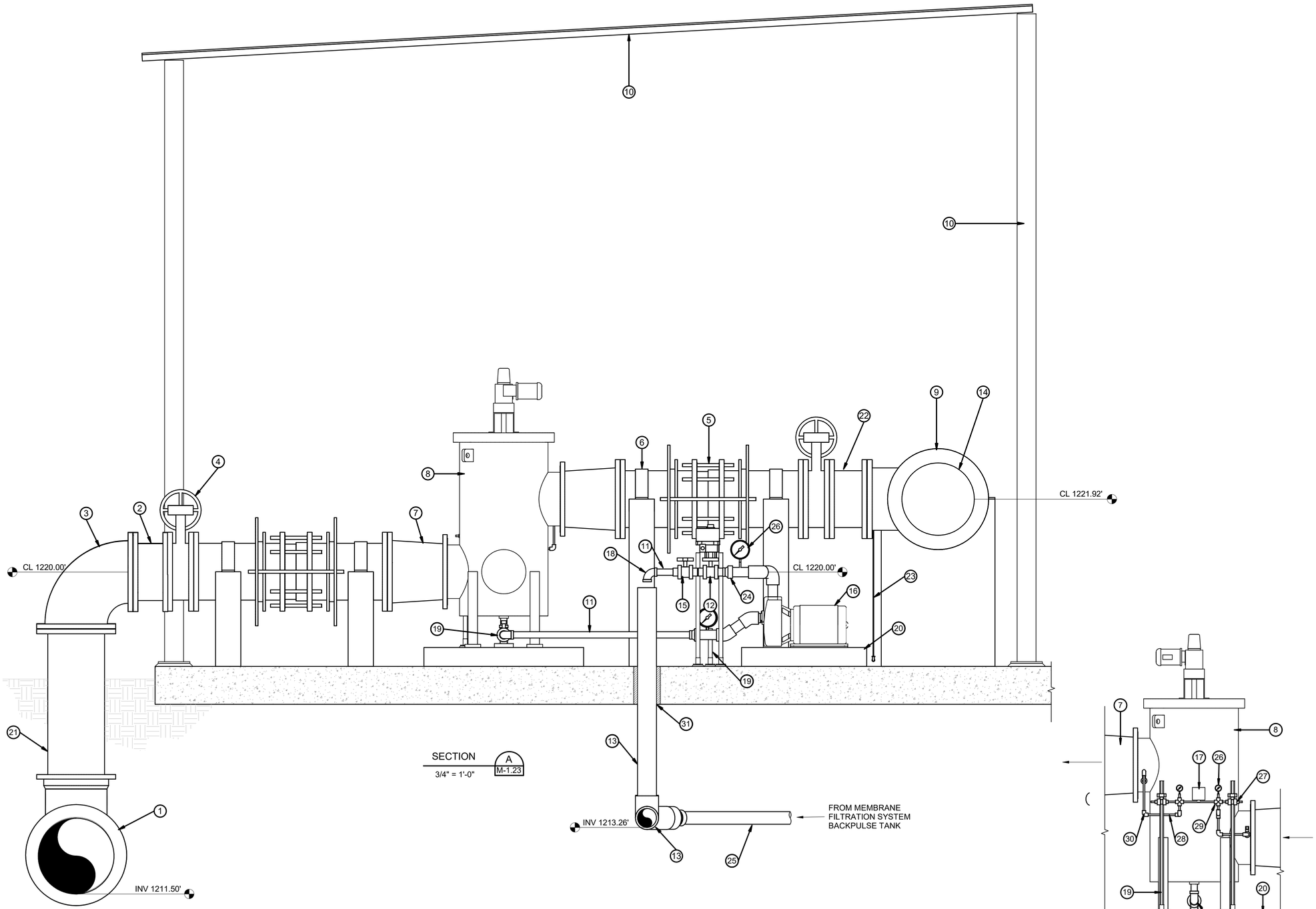

SECTION A M-1.23
3/4" = 1'-0"

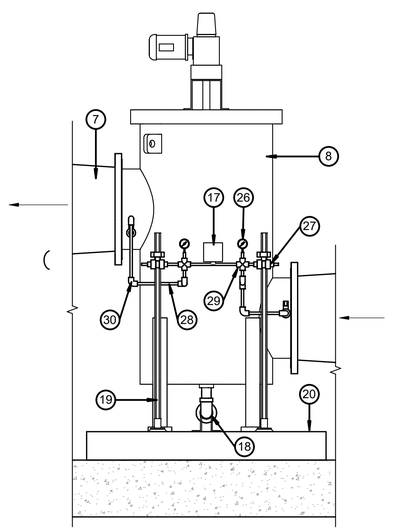

SECTION K M-1.23
3/4" = 1'-0"

KEYED NOTES

1. 24" DIA DIP STRAINER INLET MANIFOLD
2. 18" DIA DIP STRAINER INLET PIPE
3. 24" DIA DIP FL X FL 90 DEGREE BEND
4. 18" DIA BUTTERFLY VALVE (TYP)
5. 18" DIA RESTRAINED FLEXIBLE COUPLING (TYP), SEE DETAIL 304 SHEET M-7.03
6. CONCRETE PIPE SUPPORT (TYP), SEE STRUCTURAL SHEETS FOR DETAIL
7. 18" x 16" REDUCER (TYP)
8. SELF-CLEANING STRAINER
9. 24" DIA DIP STRAINER OUTLET MANIFOLD
10. SHADE CANOPY, SEE STRUCTURAL SHEETS FOR DETAILS
11. 2" DIA CPVC SELF-CLEANING STRAINERS BACKWASH DRAIN PIPE
12. 2" DIA ELECTRICALLY ACTUATED BALL VALVE
13. 6" DIA CPVC BACKWASH DRAIN PIPE
14. BLIND FLANGE
15. 2" DIA BALL VALVE
16. BACKWASH ASSIST PUMP
17. DIFFERENTIAL PRESSURE SWITCH
18. 2" DIA CPVC 90 DEGREE BEND (TYP)
19. UNISTRUT PIPE SUPPORT (TYP), SEE DETAIL 703 SHEET M-7.07
20. CONCRETE EQUIPMENT PAD (TYP), SEE STRUCTURAL SHEETS FOR DETAILS
21. 24" DIA DIP MJ X FL SPOOL PIECE
22. 18" DIA DIP STRAINER OUTLET PIPE
23. 1/4" DIA CPVC ACH PIPE
24. 3" X 2" REDUCER
25. 4" DIA CPVC MFS BACKPULSE TANK DRAIN PIPE
26. PRESSURE GAUGE (TYP), SEE DETAIL 406 SHEET M-7.04
27. 1/2" DIA BALL VALVE (TYP)
28. 1/2" DIA COPPER PIPE
29. 1/2" DIA CROSS TEE (TYP)
30. 1/2" DIA COPPER 90 DEGREE BEND (TYP)
31. PIPE PENETRATION, SEE DETAIL 103 SHEET M-7.01

1620 West Fountainhead Pkwy
Suite 501
Tempe, Arizona 85282
Phone: (480) 893-8860

Improving Arizona's Infrastructure Since 1942

WILSON ENGINEERS

CITY OF CHANDLER
RECLAIMED WATER INTERCONNECT FACILITY

SELF-CLEANING STRAINERS SECTION AND DETAILS - 1

CITY PROJECT NO. WW1901.203
WILSON PROJECT NO. 21007

Design: KP	Drawn: JMJ	Checked: SR
Date: 02/2022	Wilson Project No. 21007	

Rev#	Date	Description	By

VERIFY SCALES
BAR IS ONE INCH ON ORIGINAL DRAWING
0 1"
IF NOT ONE INCH ON THIS SHEET, ADJUST SCALES ACCORDINGLY

Registered Professional Engineer (Civil) CERTIFICATE NO. 30185 UDAY K. GANDHE Date Signed 02/28/2022 ARIZONA U.S.A.

Registered Professional Engineer (Civil) CERTIFICATE NO. 41004 SREERAM RENGARAJ Date Signed 02/28/2022 ARIZONA U.S.A.

Sheet No. **M-1.24**

2/25/2022 4:17:07 PM \\phxss01\Data\PROJECT_Revit\05 Chandler Airport WRF\21007\1.0 Membrane Structure.rvt

AGENCY REVIEW

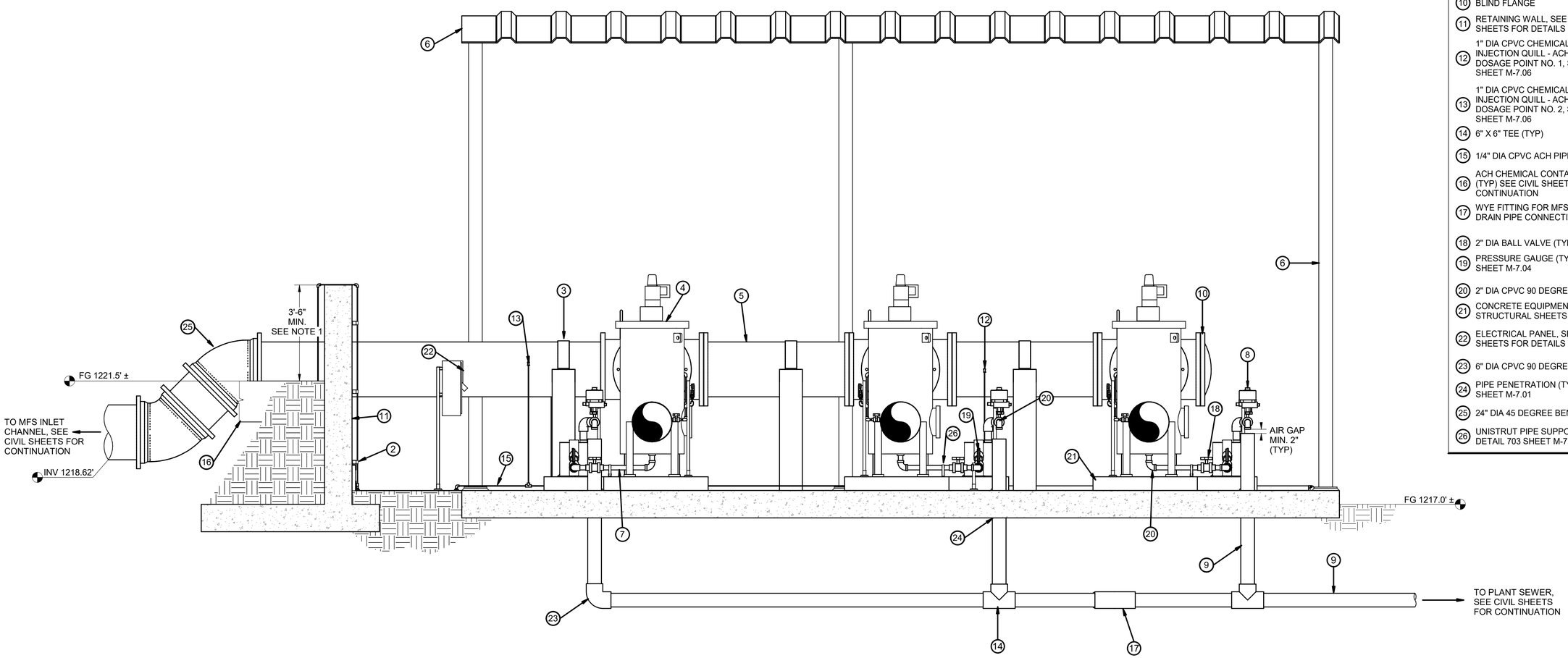

SECTION B M-1.23
1/2" = 1'-0"

NOTE:
1. SEE STRUCTURAL AND CIVIL SHEETS FOR DETAILS.

KEYED NOTES

1. 18" DIA DIP STRAINER INLET PIPE
2. FLUSH MOUNT PIPE SUPPORT (TYP), DETAIL 203 SHEET M-7.02
3. CONCRETE PIPE SUPPORT (TYP), SEE STRUCTURAL SHEETS FOR DETAILS
4. SELF-CLEANING STRAINER (TYP)
5. 24" DIA DIP STRAINER OUTLET MANIFOLD
6. SHADE CANOPY, SEE STRUCTURAL SHEETS FOR DETAILS
7. 2" DIA CPVC SELF-CLEANING STRAINERS BACKWASH DRAIN PIPE
8. 2" DIA ELECTRICALLY ACTUATED BALL VALVE
9. 6" DIA CPVC BACKWASH DRAIN PIPE
10. BLIND FLANGE
11. RETAINING WALL, SEE STRUCTURAL SHEETS FOR DETAILS
12. 1" DIA CPVC CHEMICAL PIPE AND INJECTION QUILL - ACH COAGULANT DOSAGE POINT NO. 1, SEE DETAIL 605 SHEET M-7.06
13. 1" DIA CPVC CHEMICAL PIPE AND INJECTION QUILL - ACH COAGULANT DOSAGE POINT NO. 2, SEE DETAIL 605 SHEET M-7.06
14. 6" X 6" TEE (TYP)
15. 1/4" DIA CPVC ACH PIPE
16. ACH CHEMICAL CONTAINMENT TRENCH (TYP) SEE CIVIL SHEETS FOR CONTINUATION
17. WYE FITTING FOR MFS BACKPULSE TANK DRAIN PIPE CONNECTION
18. 2" DIA BALL VALVE (TYP)
19. PRESSURE GAUGE (TYP), SEE DETAIL 406 SHEET M-7.04
20. 2" DIA CPVC 90 DEGREE BEND (TYP)
21. CONCRETE EQUIPMENT PAD (TYP), SEE STRUCTURAL SHEETS FOR DETAILS
22. ELECTRICAL PANEL, SEE ELECTRICAL SHEETS FOR DETAILS
23. 6" DIA CPVC 90 DEGREE BEND
24. PIPE PENETRATION (TYP), SEE DETAIL 103 SHEET M-7.01
25. 24" DIA 45 DEGREE BEND (TYP)
26. UNISTRUT PIPE SUPPORT (TYP), SEE DETAIL 703 SHEET M-7.07

1620 West Fountainhead Pkwy
Suite 501
Tempe, Arizona 85282
Phone: (480) 893-8860

Improving Arizona's Infrastructure Since 1942

WILSON ENGINEERS

CITY OF CHANDLER
RECLAIMED WATER INTERCONNECT FACILITY

SELF-CLEANING STRAINERS SECTION AND DETAILS - 2

CITY PROJECT NO. WW1901.203
WILSON PROJECT NO.

Design: KP	Drawn: JMJ	Checked: SR
Date: 02/2022	Wilson Project No.	

Rev#	Date	Description	By

VERIFY SCALES
BAR IS ONE INCH ON ORIGINAL DRAWING
0 1"
IF NOT ONE INCH ON THIS SHEET, ADJUST SCALES ACCORDINGLY

Registered Professional Engineer (Civil) CERTIFICATE NO. 30185 UDAY K. GANDHE Date Signed 02/28/2022 ARIZONA U.S.A.

Registered Professional Engineer (Civil) CERTIFICATE NO. 41044 SREERAM RENGARAJ Date Signed 02/28/2022 ARIZONA U.S.A.

Sheet No. **M-1.25**

2/25/2022 4:05:30 PM \\phxss01\Data\PROJECT_Revit\05 Chandler Airport WRF\21007\1.0 Membrane Structure.rvt

AGENCY REVIEW

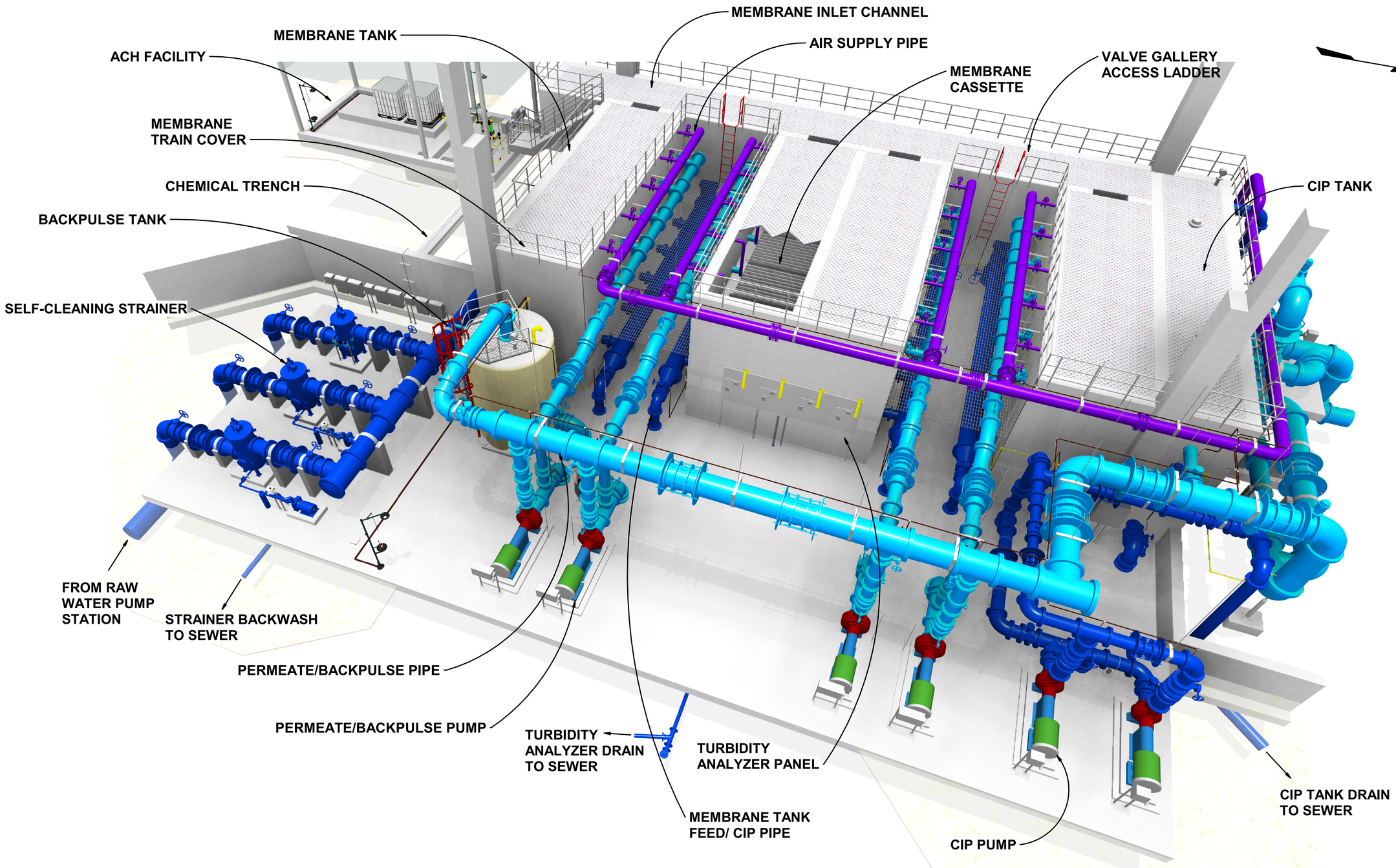

NOTE:

1. CANOPY NOT SHOWN FOR CLARITY.

1620 West Fountainhead Pkwy
Suite 501
Tempe, Arizona 85282
Phone: (480) 893-8860

Improving Arizona's Infrastructure Since 1942

WILSON ENGINEERS

CITY OF CHANDLER
RECLAIMED WATER INTERCONNECT FACILITY

MEMBRANE FACILITY OVERALL PLAN RENDERING - 1

CITY PROJECT NO. WW1901.203
WILSON PROJECT NO. 21007

Design: SZ	Drawn: JMJ	Checked: SR
Date: 02/2022	Wilson Project No. 21007	

Rev#	Date	Description	By

VERIFY SCALES
BAR IS ONE INCH ON ORIGINAL DRAWING
0 1"
IF NOT ONE INCH ON THIS SHEET, ADJUST SCALES ACCORDINGLY

Registered Professional Engineer (Civil) CERTIFICATE NO. 30185 UDAY K. GANDHE Date Signed 02/28/2022 ARIZONA U.S.A.

Registered Professional Engineer (Civil) CERTIFICATE NO. 41684 SREERAM RENGARAJ Date Signed 02/28/2022 ARIZONA U.S.A.

Sheet No. M-1.41

2/25/2022 3:52:12 PM \\phxss01\Data\PROJECT_Revit\05 Chandler Airport WRF\21007\1.0 Membrane Structure.rvt

AGENCY REVIEW

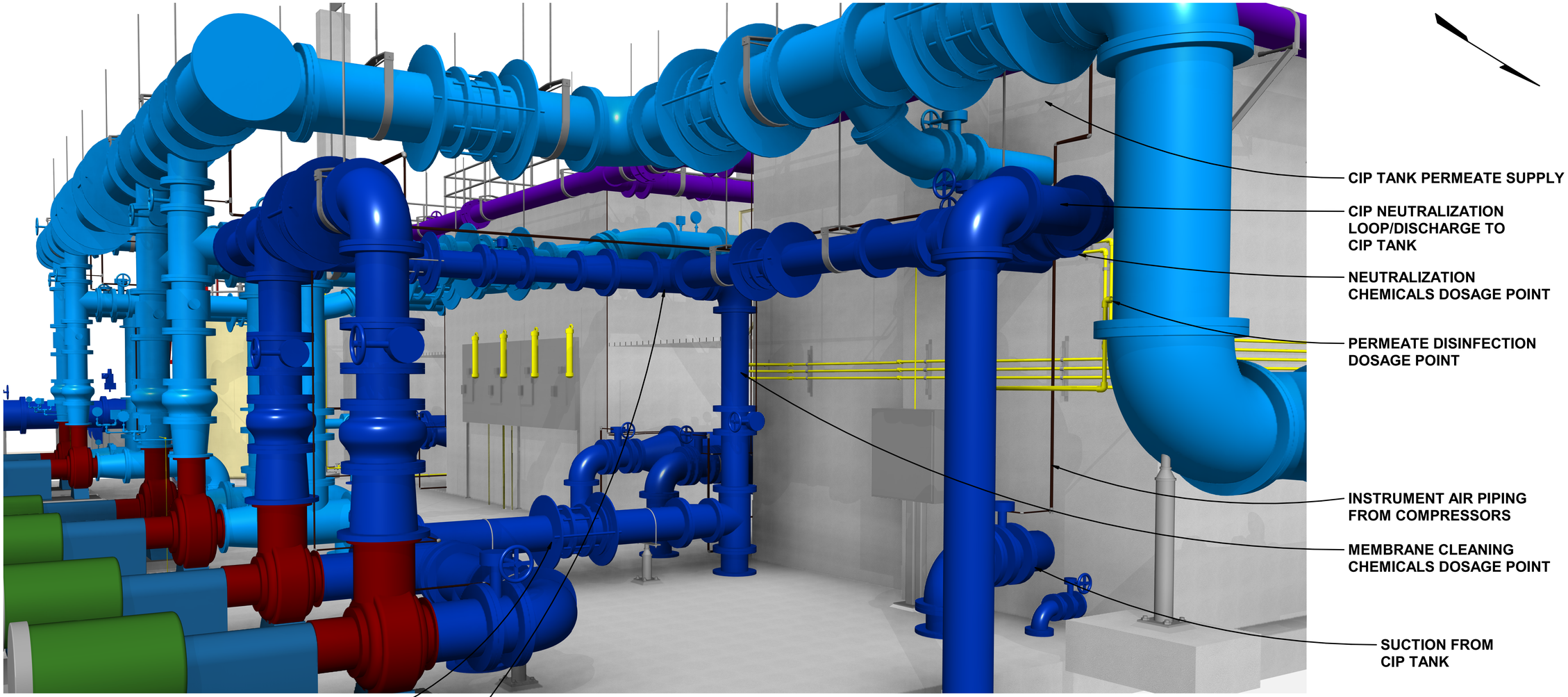

CIP SYSTEM SECTION

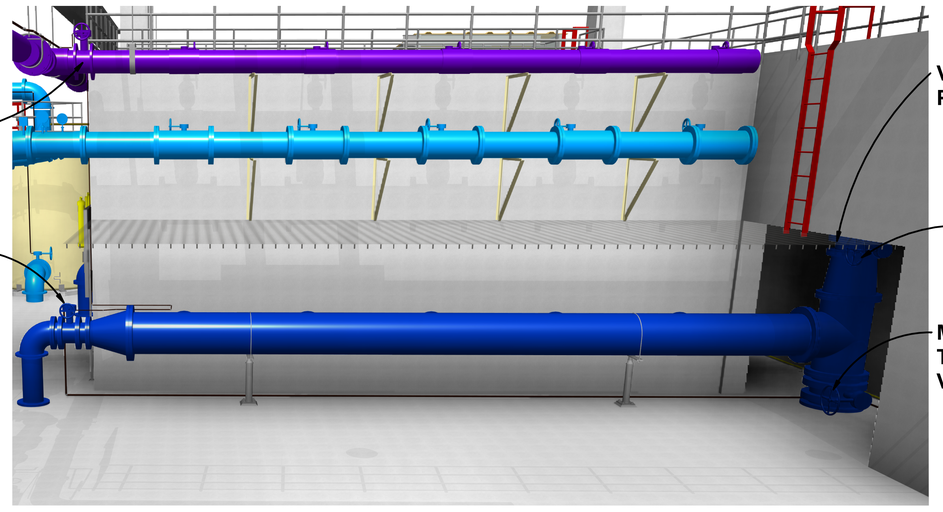

VALVE GALLERY SECTION

NOTES:

1. CANOPY NOT SHOWN FOR CLARITY.
2. RETAINING WALL NOT SHOWN FOR CLARITY.

1620 West Fountainhead Pkwy
Suite 501
Tempe, Arizona 85282
Phone: (480) 893-8860

Improving Arizona's Infrastructure Since 1942

WILSON ENGINEERS

CITY OF CHANDLER
RECLAIMED WATER INTERCONNECT FACILITY

MEMBRANE FACILITY RENDERING - 2

CITY PROJECT NO. WW1901.203
WILSON PROJECT NO. 21007

Design: SZ | Drawn: JMJ | Checked: SR
Date: 02/2022 | Wilson Project No. 21007

Rev#	Date	Description	By

VERIFY SCALES
BAR IS ONE INCH ON ORIGINAL DRAWING
0 1"
IF NOT ONE INCH ON THIS SHEET, ADJUST SCALES ACCORDINGLY

Registered Professional Engineer (Civil) CERTIFICATE NO. 30185 UDAY K. GANDHE Date Signed 02/28/2022 ARIZONA U.S.A.

Registered Professional Engineer (Civil) CERTIFICATE NO. 41084 SREERAM RENGARAJ Date Signed 02/28/2022 ARIZONA U.S.A.

Sheet No. M-1.42

2/25/2022 3:16:46 PM \\phxss01\Data\PROJECT_Revit\05 Chandler Airport WRF\21007\1.0 Membrane Structure.rvt

AGENCY REVIEW

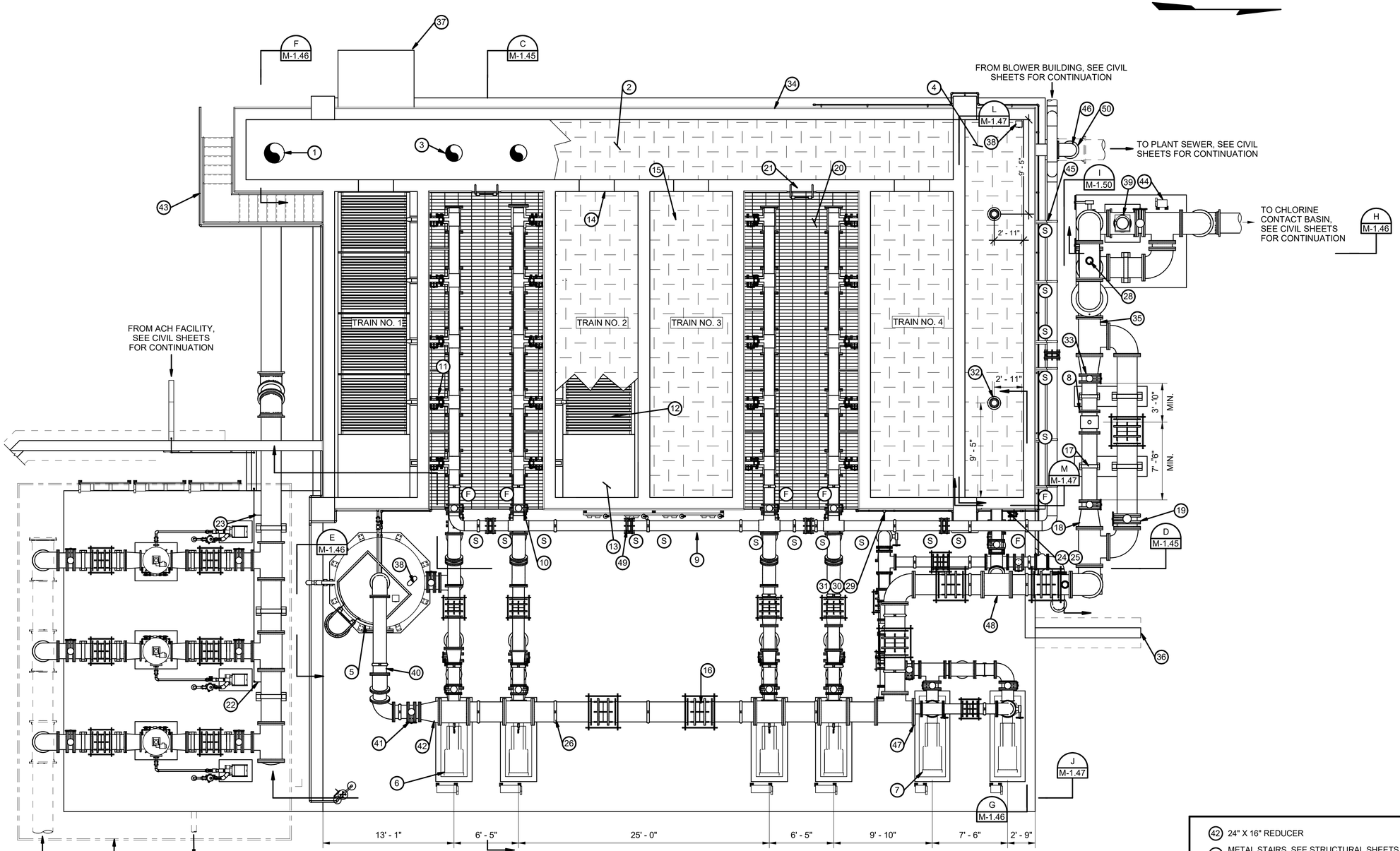

OVERALL PLAN EL. 1235.00

3/16" = 1'-0"

NOTES:

1. CANOPY NOT SHOWN FOR CLARITY.
2. MEMBRANE COVERS AND INLET CHANNEL COVER PARTIALLY SHOWN FOR CLARITY.
3. SEE SHEET M-1.50 FOR MEMBRANE FACILITY INSTRUMENT AIR PIPING TO FLOW CONTROL VALVES. INSTRUMENT AIR PIPING NOT SHOWN FOR CLARITY.
4. CONTRACTOR TO COORDINATE LOCATIONS OF HANGING PIPE SUPPORTS WITH CANOPY SUPPORT BEAMS, SEE STRUCTURAL SHEETS.

NOTE:

(F): FIXED SUPPORT

(S): SLIDING SUPPORT

KEYED NOTES

1. 24" DIA DIP COMMON FEED CHANNEL INLET
2. MEMBRANE TRAIN COMMON INLET CHANNEL
3. 24" DIA DIP MEMBRANE FEED (TYP)
4. CIP TANK
5. FRP BACKPULSE SUPPLY TANK
6. PERMEATE/BACKPULSE PUMP (TYP)
7. CIP PUMP (TYP)
8. 18" DIA FLOW METER
9. 12" DIA SS PROCESS AIR SUPPLY PIPE (TYP)
10. 12" DIA BUTTERFLY VALVE (TYP)
11. 4" DIA BUTTERFLY VALVE (TYP)
12. MEMBRANE CASSETTE (TYP)
13. FUTURE MEMBRANE CASSETTE SPACE (TYP)
14. MEMBRANE TANK OVERFLOW (TYP)
15. EXTRUDED METAL FLAT PANEL COVER (TYP)
16. RESTRAINED FLEXIBLE COUPLING (TYP), SEE DETAIL 304 SHEET M-7.03
17. CONCRETE PIPE SUPPORT (TYP), SEE STRUCTURAL SHEETS FOR DETAILS
18. 24" X 18" ECCENTRIC REDUCER (TYP)
19. 24" DIA BUTTERFLY VALVE (TYP)
20. VALVE GALLERY ACCESS PLATFORM (TYP)
21. VALVE GALLERY ACCESS LADDER (TYP)
22. 1" DIA CHEMICAL PIPE AND INJECTION QUILL - ACH COAGULANT DOSAGE POINT NO. 1, SEE DETAIL 605 SHEET M-7.06
23. 1" DIA CHEMICAL PIPE AND INJECTION QUILL - ACH COAGULANT DOSAGE POINT NO. 2, SEE DETAIL 605 SHEET M-7.06
24. 1" DIA CHEMICAL PIPE AND INJECTION QUILL - SODIUM HYDROXIDE DOSAGE POINT, SEE DETAIL 605 SHEET M-7.06
25. 1" DIA CHEMICAL PIPE AND INJECTION QUILL - SODIUM BISULFITE DOSAGE POINT, SEE DETAIL 605 SHEET M-7.06
26. HANGING PIPE SUPPORT, SEE DETAIL 503 SHEET M-7.05 (TYP)
27. SELF-CLEANING STRAINERS, SEE SHEET M-1.23 FOR DETAILS
28. 4" DIA COMBINATION AIR/VACCUM RELEASE VALVE (TYP), SEE DETAIL 502 SHEET M-7.05
29. 1" DIA CHEMICAL PIPE AND INJECTION QUILL - SODIUM HYPOCHLORITE DOSAGE POINT, SEE DETAIL 605 SHEET M-7.06
30. 1" DIA CHEMICAL PIPE AND INJECTION QUILL - CITRIC ACID DOSAGE POINT, SEE DETAIL 605 SHEET M-7.06
31. 1" DIA CHEMICAL PIPE AND INJECTION QUILL - SULFURIC ACID DOSAGE POINT, SEE DETAIL 605 SHEET M-7.06
32. PROVIDE FLAT PANEL MODIFIED TO ACCOMODATE 12" DIA EXHAUST FAN (TYP), SEE DETAIL 406, SHEET M-7.04
33. 18" DIA BUTTERFLY VALVE (TYP)
34. THREE-RAIL, ALUMINUM SIDE-MOUNTED REMOVABLE HANDRAIL, SEE DETAIL 701 SHEET M-7.07
35. 24" X 24" TEE (TYP)
36. RETAINING WALL, SEE STRUCTURAL SHEETS FOR DETAILS
37. MEMBRANE CASSETTE DROP-OFF PAD, SEE STRUCTURAL SHEETS FOR DETAILS
38. LEVEL INDICATOR TRANSMITTER (TYP), SEE ELECTRICAL SHEETS FOR DETAILS
39. INLINE RAPID MIXER
40. 16" DIA DIP BACKPULSE TANK FILL PIPE
41. 16" DIA BUTTERFLY VALVE
42. 24" X 16" REDUCER
43. METAL STAIRS, SEE STRUCTURAL SHEETS FOR DETAILS
44. INLINE MIXER DISCONNECT SWITCH, SEE ELECTRICAL SHEETS FOR DETAILS
45. WALL MOUNTED PIPE SUPPORT (TYP), SEE DETAIL 202 SHEET M-7.02
46. 14" DIA DIP CIP TANK OVERFLOW
47. 24" DIA DIP BLIND FLANGE FOR TEMPORARY CONNECTION DURING COMMISSIONING
48. 24" X 24" X 12" DIA TEE
49. RESTRAINED RUBBER EXPANSION JOINT, SEE DETAIL 301 SHEET M-7.03
50. 24" X 14" TEE

1620 West Fountainhead Pkwy
Suite 501
Tempe, Arizona 85282
Phone: (480) 893-8860

Improving Arizona's Infrastructure Since 1942

WILSON ENGINEERS

CITY OF CHANDLER
RECLAIMED WATER INTERCONNECT FACILITY

MEMBRANE FACILITY OVERALL PLAN

CITY PROJECT NO.WW1901.203
WILSON PROJECT NO. 21007

Design: **SZ** Date: **02/2022** | Drawn: **JMJ** | Checked: **SR** | Wilson Project No. **21007**

Rev#	Date	Description	By

VERIFY SCALES

BAR IS ONE INCH ON ORIGINAL DRAWING

0 — 1"

IF NOT ONE INCH ON THIS SHEET, ADJUST SCALES ACCORDINGLY

Registered Professional Engineer — Certified — 30185 UDAY K. GANDHE — Date Signed 02/28/2022 — ARIZONA U. S. A.

Registered Professional Engineer — CERTIFICATE NO. 41040 — SREERAM RENGARAJ — Date Signed 02/28/2022 — ARIZONA U. S. A.

Sheet No. **M-1.43**

2/25/2022 4:38:52 PM \\phxss01\Data\PROJECT_Revit\05 Chandler Airport WRF\21007\1.0 Membrane Structure.rvt

AGENCY REVIEW

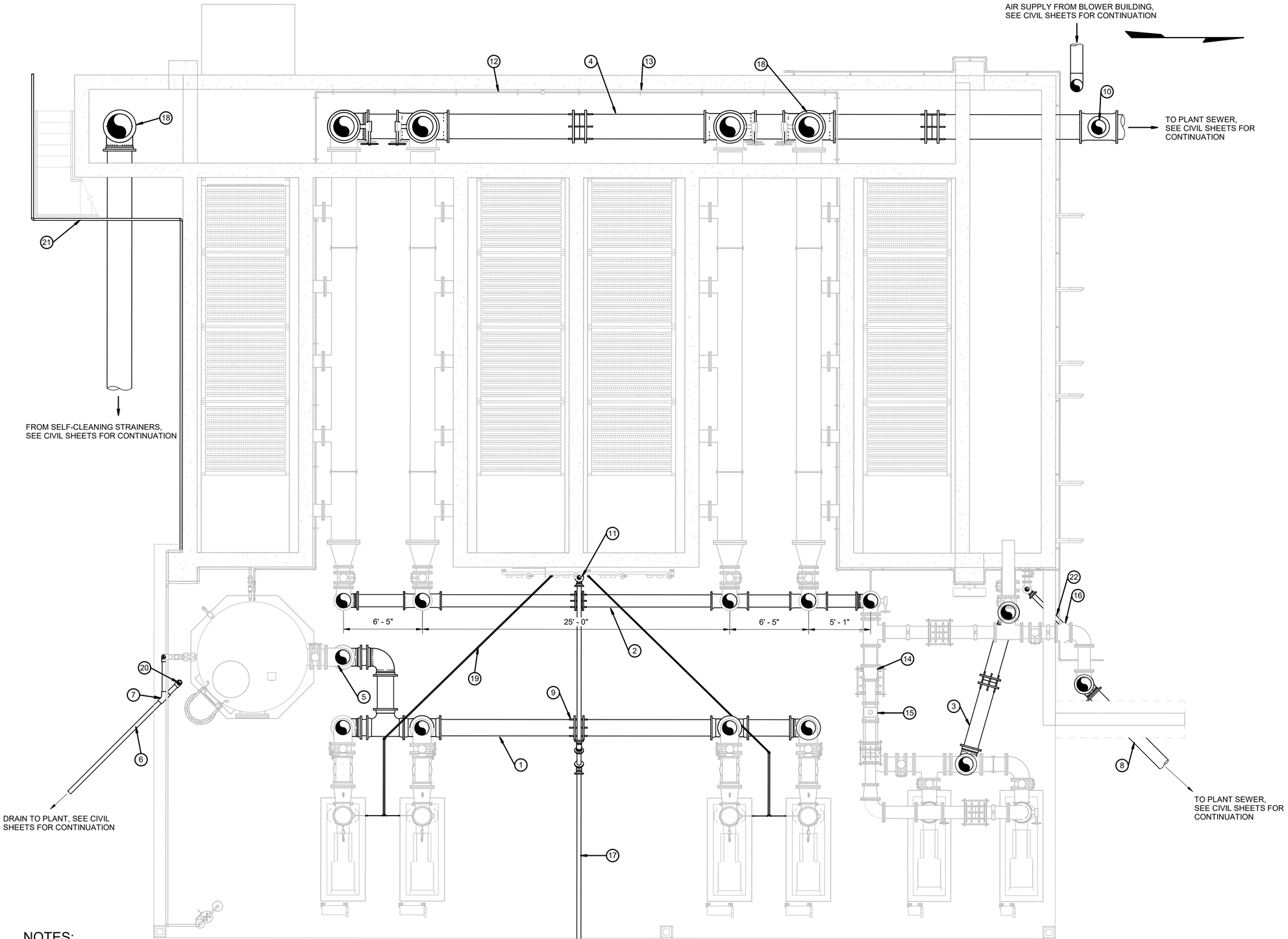

LOWER PLAN EL. 1224.00

1/4" = 1'-0"

NOTES:

1. CANOPY NOT SHOWN FOR CLARITY.
2. MEMBRANE COVERS AND INLET CHANNEL COVER NOT SHOWN FOR CLARITY.
3. PIPING SUSPENDED FROM CANOPY NOT SHOWN FOR CLARITY.
4. BELOW GRADE PIPING SHOWN IN BOLD FOR CLARITY.
5. SEE SHEET M-1.50 FOR MEMBRANE FACILITY INSTRUMENT AIR PIPING TO FLOW CONTROL VALVES. INSTRUMENT AIR PIPING NOT SHOWN FOR CLARITY.
6. PIPING BENEATH STRUCTURES TO BE CONCRETE ENCASED, PER DETAIL 103, SHEET C-7.01

KEYED NOTES

1. 16" DIA DIP BACKPULSE SUPPLY SUCTION MANIFOLD
2. 12" DIA DIP CIP MANIFOLD
3. 12" DIA DIP SUCTION PIPE FROM CIP TANK
4. 24" DIA DIP MEMBRANE TANK DRAIN MANIFOLD
5. 16" DIA DIP SUCTION PIPE FROM BACKPULSE SUPPLY TANK
6. 4" DIA CPVC BACKPULSE TANK DRAIN PIPE
7. 4" X 4" WYE FITTING
8. 12" DIA DIP CIP TANK DRAIN TO SEWER
9. RESTRAINED FLEXIBLE COUPLING FOR BELOW GRADE DIP, SEE SPECIFICATIONS (TYP)
10. 24" X 14" DIA TEE
11. FLOOR DRAIN, SEE DETAIL 704, SHEET M-7.07
12. FIELD ROUTE 1" DIA CPVC SODIUM HYPOCHLORITE LINE FLOOR-MOUNTED TO BACKPULSE TANK
13. FLOOR MOUNTED PIPE SUPPORT (TYP), SEE DETAIL 702, SHEET M-7.07
14. 12" X 10" X DIA DIP REDUCER (TYP)
15. 10" DIA MAGNETIC FLOW METER
16. 12" DIA CHECK VALVE
17. 4" DIA DIP FROM TURBIDITY ANALYZER PANEL DRAIN
18. PIPE PENETRATION (TYP), SEE DETAIL 105 SHEET M-7.01
19. ROUTE TWO 1/4" DIA PTFE SAMPLE LINES THROUGH 1" DIA CPVC, FROM PUMP DISCHARGE TO TURBIDITY ANALYZER PANEL (TYP)
20. PRESSURE CLEAN OUT (TYP), SEE DETAIL 104 SHEET C-7.01
21. 2" DIA COPPER POTABLE WATER PIPE, SEE CIVIL SHEETS FOR CONTINUATION
22. 4" DIA DIP CIP TANK DRAIN LINE, SEE CIVIL SHEETS FOR CONTINUATION

1620 West Fountainhead Pkwy
Suite 501
Tempe, Arizona 85282
Phone: (480) 893-8860

Improving Arizona's Infrastructure Since 1942

WILSON ENGINEERS

CITY OF CHANDLER
RECLAIMED WATER INTERCONNECT FACILITY

MEMBRANE FACILITY LOWER PLAN

CITY PROJECT NO. WW1901.203
WILSON PROJECT NO. 21007

Design: SZ	Drawn: JMJ	Checked: SR
Date: 02/2022	Wilson Project No. 21007	

Rev#	Date	Description	By

VERIFY SCALES

BAR IS ONE INCH ON ORIGINAL DRAWING

0 1"

IF NOT ONE INCH ON THIS SHEET, ADJUST SCALES ACCORDINGLY

Registered Professional Engineer (Civil) CERTIFICATE NO. 30185 UDAY K. GANDHE Date Signed 02/28/2022 ARIZONA U. S. A.

Registered Professional Engineer (Civil) CERTIFICATE NO. 41844 SREERAM RENGARAJ Date Signed 02/28/2022 ARIZONA U. S. A.

Sheet No. **M-1.44**

2/25/2022 4:42:35 PM \\phxss01\Data\PROJECT_Revit\05 Chandler Airport WRF\21007\1.0 Membrane Structure.rvt

AGENCY REVIEW

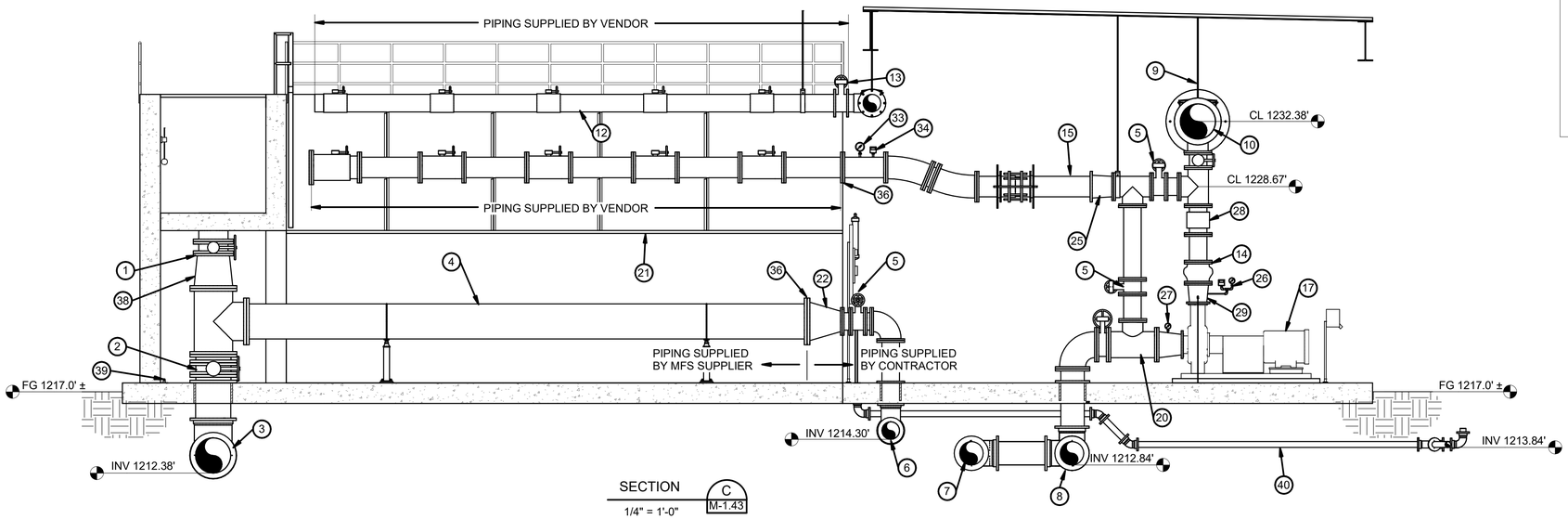

SECTION C M-1.43
1/4" = 1'-0"

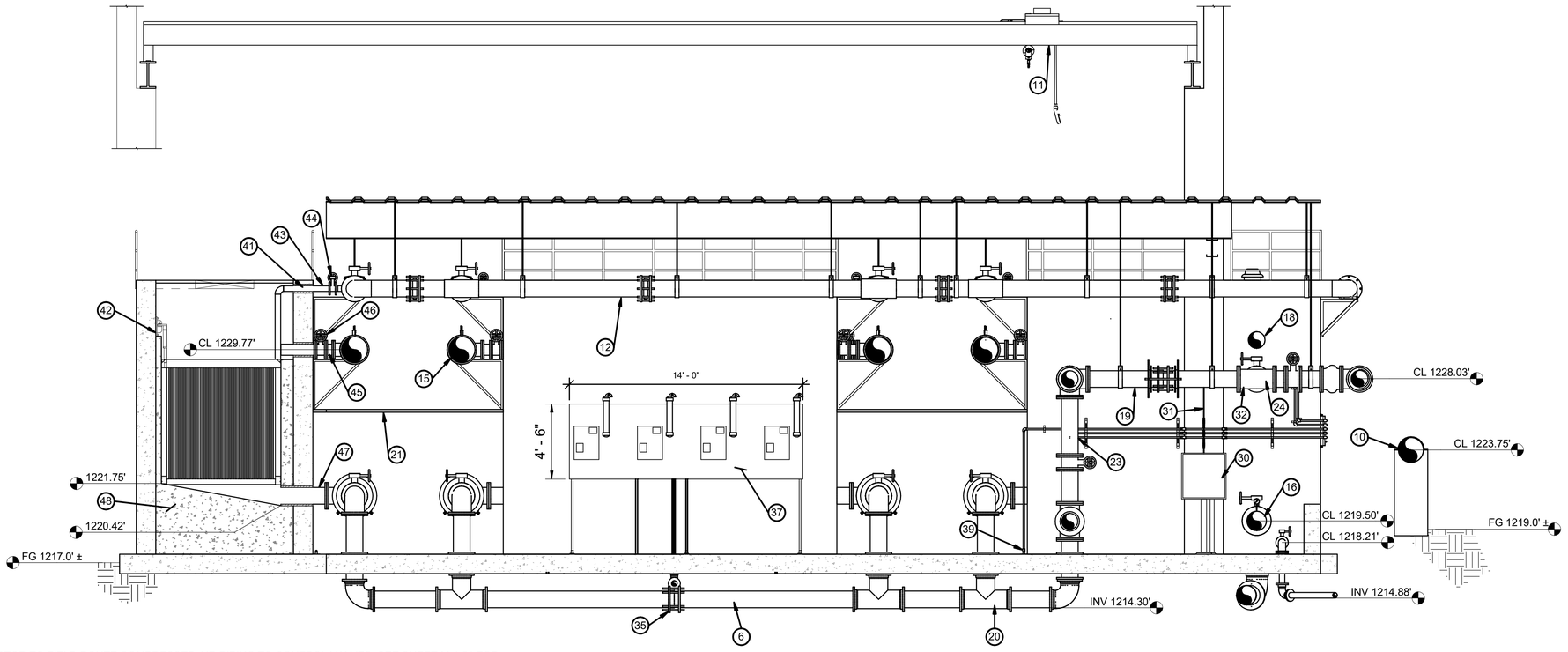

SECTION D M-1.43
1/4" = 1'-0"

NOTES:

1. CONTRACTOR TO FIELD ROUTE COMPRESSED AIR PIPING TO CONTROL VALVES. SEE SHEET M-1.51 FOR ISOMETRIC DIAGRAM. INSTRUMENT AIR PIPING NOT SHOWN FOR CLARITY.
2. PIPING BENEATH STRUCTURES TO BE CONCRETE ENCASED, PER DETAIL 103, SHEET C-7.01
3. CONTRACTOR TO COORDINATE LOCATIONS OF HANGING PIPE SUPPORTS IN THE FIELD WITH CANOPY SUPPORT BEAMS, SEE STRUCTURAL SHEETS.

KEYED NOTES

1. 20" DIA MEMBRANE TRAIN INLET BUTTERFLY VALVE
2. 24" DIA MEMBRANE TANK DRAIN BUTTERFLY VALVE
3. 24" DIA DIP MEMBANE TANK DRAIN MANIFOLD
4. 24" DIA 304 SS MEMBRANE TANK INLET/DRAIN MANIFOLD
5. 12" DIA BUTTERFLY VALVE
6. 12" DIA DIP CIP MANIFOLD
7. 16" DIA DIP SUCTION FROM BACKPULSE SUPPLY TANK
8. 16" DIA DIP PERMEATE PUMP SUCTION MANIFOLD
9. HANGING PIPE SUPPORT, SEE DETAIL 503 SHEET M-7.05
10. 24" DIA DIP COMMON PERMEATE MANIFOLD
11. 5-TON BRIDGE CRANE, SEE S-SHEETS FOR DETAILS
12. 12" DIA SS PROCESS AIR SUPPLY PIPE
13. 12" DIA BUTTERFLY VALVE
14. 12" DIA CHECK VALVE
15. 14" DIA DIP PERMEATE/BACKPULSE PIPE (TYP)
16. 14" DIA DIP SUCTION FROM CIP TANK
17. PERMEATE/BACKPULSE PUMP
18. 12" DIA DIP CIP TANK FILL PIPE FROM PERMEATE MANIFOLD
19. 12" DIA DIP CIP NEUTRALIZATION LOOP FROM MEMBRANE TRAIN
20. 14" X 12" TEE (TYP)
21. VALVE GALLERY ACCESS PLATFORM
22. 24" X 12" REDUCER
23. MEMBRANE CLEANING CHEMICALS DOSAGE POINT
24. NEUTRALIZATION CHEMICALS DOSAGE POINT
25. 14" X 12" REDUCER
26. DISCHARGE PRESSURE GAUGE AND SWITCH ASSEMBLY, SEE DETAIL 302 SHEET M-7.03
27. SUCTION PRESSURE GAUGE, SEE DETAIL 402 SHEET M-7.04
28. 12" DIA FLOW METER
29. 12" X 10" REDUCER
30. PH/CHLORINE ANALYZER PANEL, SEE DETAIL 2 SHEET M-1.50 AND INSTRUMENTATION SHEETS FOR DETAILS
31. 1/2" DIA SAMPLE LINE
32. SAMPLE CONNECTION, SEE DETAIL 602 SHEET M-7.06
33. PRESSURE INDICATOR TRANSMITTER, SEE ELECTRICAL SHEETS FOR DETAILS
34. PRESSURE SWITCH, SEE DETAIL 302 SHEET M-7.03
35. RESTRAINED FLEXIBLE COUPLING FOR BELOW GRADE DIP, SEE SPECIFICATIONS (TYP)
36. ISOLATING JOINT FLANGE KIT AT ALL CONNECTIONS WITH DISSIMILAR MATERIALS (TYP), SEE DETAIL 401 SHEET M-7.04
37. VENDOR-SUPPLIED TURBIDITY ANALYZER PANEL, SEE DETAIL 1 SHEET M-1.50 AND INSTRUMENTATION SHEETS FOR DETAILS
38. 24" X 20" DIA REDUCER (TYP)
39. 1" DIA CPVC SODIUM HYPOCHLORITE TO BACKPULSE TANK, SEE SHEET M-1.44 FOR ROUTING
40. 4" DIA CPVC DRAIN FROM TURBIDITY ANALYZER PANEL
41. PIPE PENTRATION (TYP), SEE DETAIL 105, SHEET M-7.01
42. CASSETE MOUNTING BRACKET, SEE STRUCTURAL SHEETS FOR DETAILS
43. 4" DIA SS AIR PIPE (TYP)
44. 4" DIA MANUAL BUTTERFLY VALVE (TYP)
45. 8" DIA SS PERMEATE PIPE (TYP)
46. 8" DIA MANUAL BUTTERFLY VALVE (TYP)
47. 12" DIA SS MEMBRANE TANK FEED PIPE (TYP)
48. MEMBRANE TANK GROUT, SEE STRUCTURAL SHEETS FOR DETAILS

1620 West Fountainhead Pkwy
Suite 501
Tempe, Arizona 85282
Phone: (480) 893-8860

Improving Arizona's Infrastructure Since 1942

WILSON ENGINEERS

CITY OF CHANDLER
RECLAIMED WATER INTERCONNECT FACILITY

MEMBRANE FACILITY SECTION AND DETAILS - 1

CITY PROJECT NO. WW1901.203
WILSON PROJECT NO. 21007

Design: SZ	Drawn: JMJ	Checked: SR
Date: 02/2022	Wilson Project No. 21007	

Rev#	Date	Description	By

VERIFY SCALES
BAR IS ONE INCH ON ORIGINAL DRAWING
0 1"
IF NOT ONE INCH ON THIS SHEET, ADJUST SCALES ACCORDINGLY

Registered Professional Engineer CERTIFICATE NO. 30185 UDAY K. GANDHE Date Signed 02/28/2022 ARIZONA U.S.A.

Registered Professional Engineer CERTIFICATE NO. 41000 SREERAM RENGARAJ Date Signed 02/28/2022 ARIZONA U.S.A.

Sheet No. **M-1.45**

AGENCY REVIEW

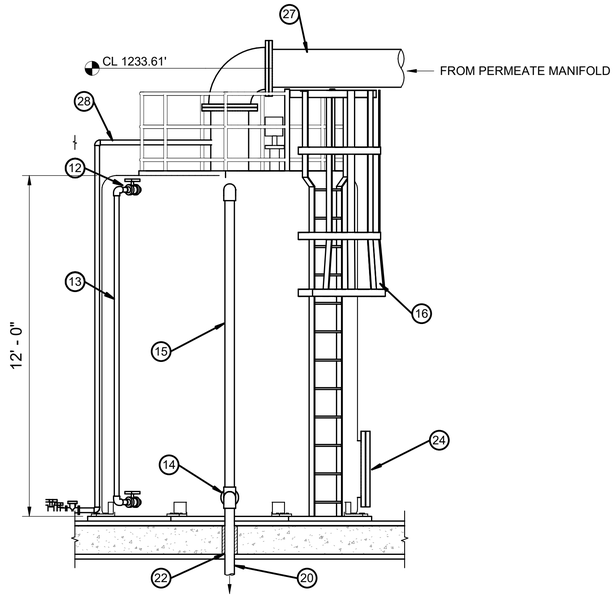

SECTION E M-1.43
3/8" = 1'-0"

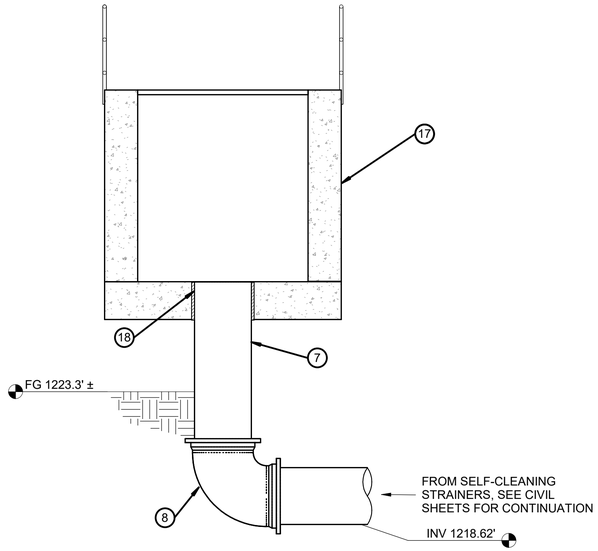

SECTION F M-1.43
3/8" = 1'-0"

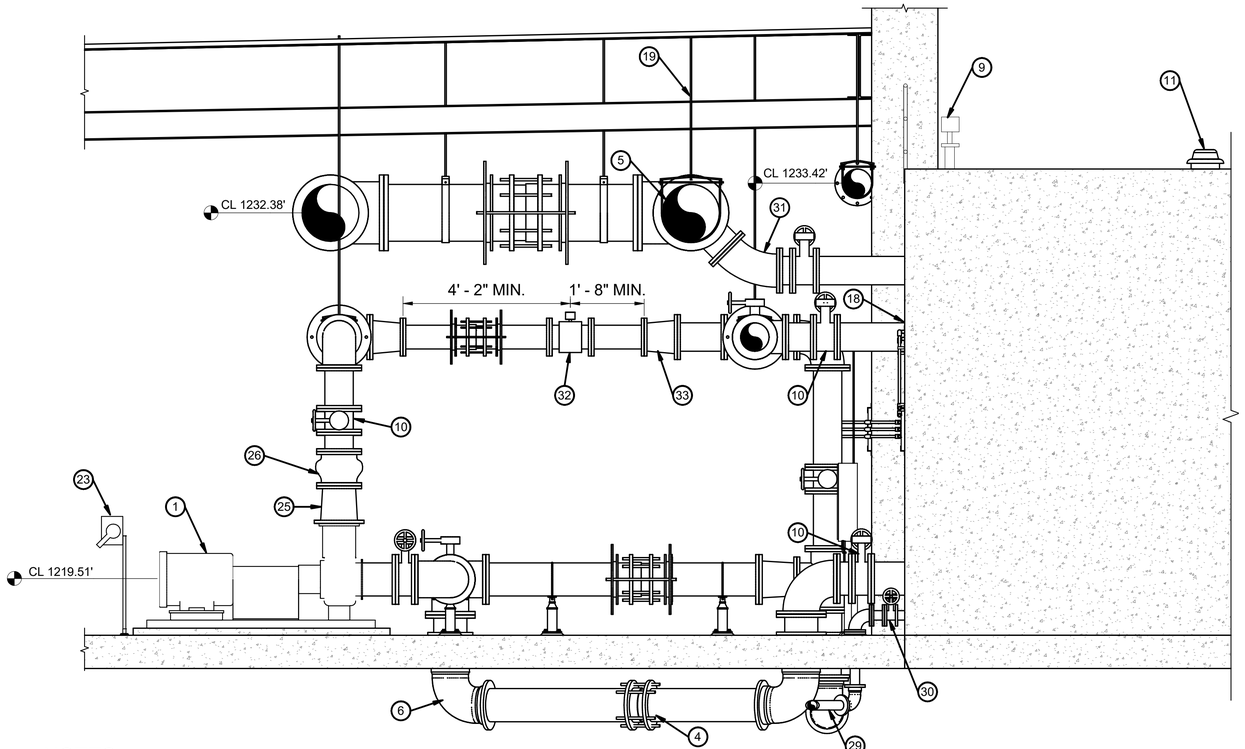

SECTION G M-1.43
3/8" = 1'-0"

NOTES:

1. PIPING BENEATH STRUCTURES TO BE CONCRETE ENCASED, PER DETAIL 103, SHEET C-7.01.
2. CONTRACTOR TO COORDINATE LOCATIONS OF HANGING PIPE SUPPORTS IN FIELD WITH CANOPY SUPPORT BEAMS, SEE STRUCTURAL SHEETS.

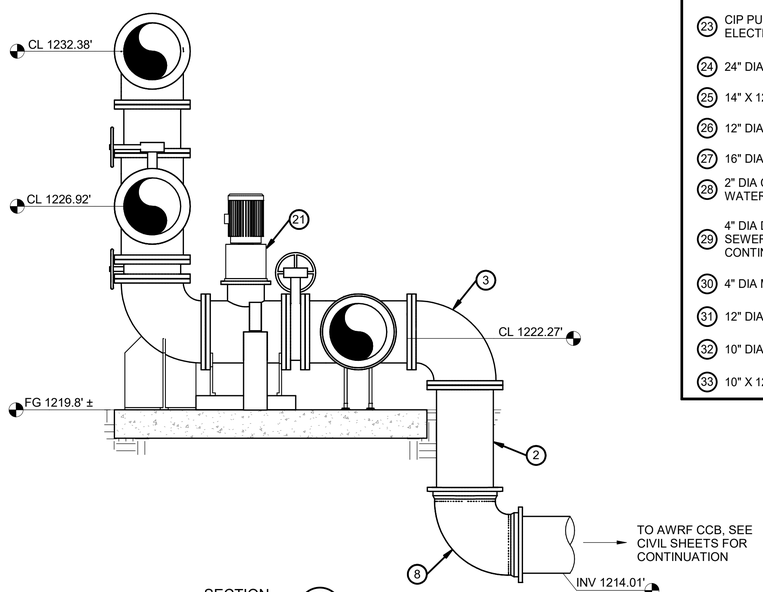

SECTION H M-1.43
3/8" = 1'-0"

KEYED NOTES

1. CIP PUMP
2. 24" DIA DIP FL X MJ SPOOL PIECE
3. 90 DEGREE BEND (TYP)
4. RESTRAINED FLEXIBLE COUPLING FOR BELOW GRADE DIP, SEE SPECIFICATIONS (TYP)
5. 24" DIA DIP COMMON PERMEATE MANIFOLD
6. 14" DIA DIP MJ X MJ 90 DEGREE BEND (TYP)
7. 24" DIA DIP MJ X PE SPOOL PIECE
8. 24" DIA DIP MJ X MJ 90 DEGREE BEND
9. LEVEL INDICATOR TRANSMITTER, SEE ELECTRICAL SHEETS FOR DETAILS
10. 12" DIA BUTTERFLY VALVE (TYP)
11. 12" DIA EXHAUST FAN (TYP), SEE DETAIL 205, SHEET M-7.02
12. 2" DIA CPVC BALL VALVE (TYP)
13. CLEAR PVC TANK LEVEL GAUGE
14. 4" DIA CPVC BALL VALVE
15. 4" DIA CPVC TANK OVERFLOW PIPE
16. FRP GUARDRAIL AND LADDER
17. MEMBRANE TRAIN COMMON INLET CHANNEL, SEE STRUCTURAL SHEETS FOR DETAILS
18. PIPE PENTRATION, SEE DETAIL 105 SHEET M-7.01
19. HANGING PIPE SUPPORT, SEE DETAIL 503 SHEET M-7.05
20. 4" DIA BACKPULSE TANK DRAIN PIPE
21. INLINE RAPID MIXER
22. PIPE PENETRATION, SEE DETAIL 103 SHEET M-7.01
23. CIP PUMP DISCONNECT SWITCH (TYP), SEE ELECTRICAL SHEETS FOR DETAILS
24. 24" DIA SIDE MANWAY WITH BLIND FLANGE
25. 14" X 12" REDUCER (TYP)
26. 12" DIA CHECK VALVE (TYP)
27. 16" DIA DIP BACKPULSE TANK FILL PIPE
28. 2" DIA COPPER PIPE FROM PLANT POTABLE WATER LOOP
29. 4" DIA DIP CIP TANK DRAIN TO PLANT SEWER, SEE CIVIL SHEETS FOR CONTINUATION
30. 4" DIA MANUAL BUTTERFLY VALVE
31. 12" DIA 45 DEG. BEND
32. 10" DIA MAGNETIC FLOW METER
33. 10" X 12" CONCENTRIC REDUCER (TYP)

1620 West Fountainhead Pkwy
Suite 501
Tempe, Arizona 85282
Phone: (480) 893-8860
Improving Arizona's
Infrastructure Since 1942

WILSON ENGINEERS

CITY OF CHANDLER
RECLAIMED WATER INTERCONNECT FACILITY

MEMBRANE FACILITY SECTION AND DETAILS - 2

CITY PROJECT NO. WW1901.203
WILSON PROJECT NO. 21007

Design: SZ	Drawn: JMJ	Checked: SR
Date: 02/2022	Wilson Project No. 21007	

Rev#	Date	Description	By

VERIFY SCALES
BAR IS ONE INCH ON ORIGINAL DRAWING
0 1"
IF NOT ONE INCH ON THIS SHEET, ADJUST SCALES ACCORDINGLY

Registered Professional Engineer, Civil
30185
UDAY K. GANDHE
Date Signed 02/28/2022
ARIZONA U. S. A.

Registered Professional Engineer, Civil
CERTIFICATE NO.
SREERAM RENGARAJ
Date Signed 02/28/2022
ARIZONA U. S. A.

Sheet No. **M-1.46**

2/25/2022 4:39:01 PM \\phxss01\Data\PROJECT_Revit\05 Chandler Airport WRF\21007\1.0 Membrane Structure.rvt

AGENCY REVIEW

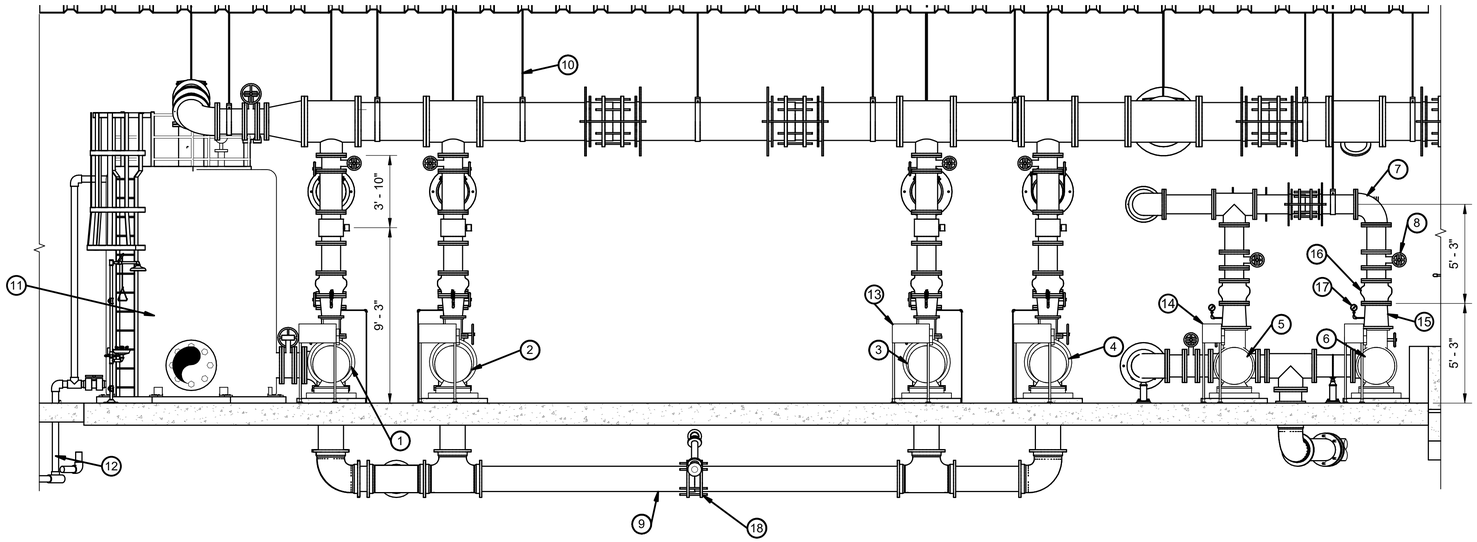

SECTION J
1/4" = 1'-0"
M-1.43

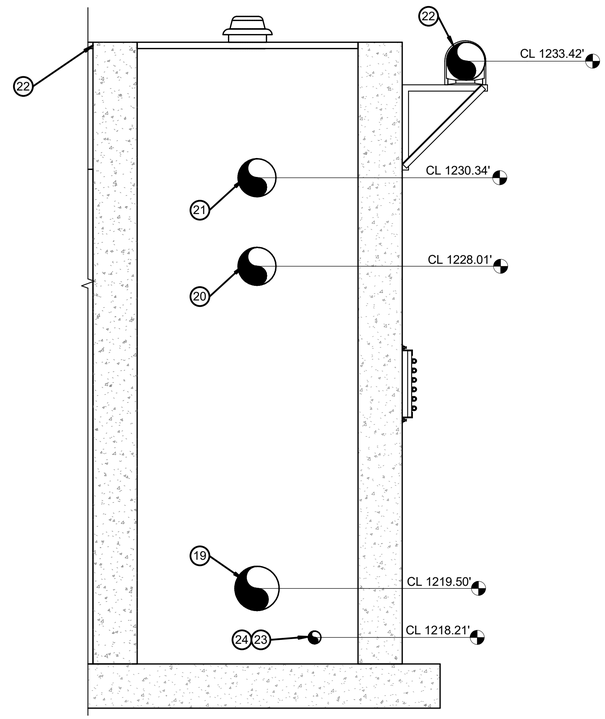

SECTION M
1/2" = 1'-0"
M-1.43

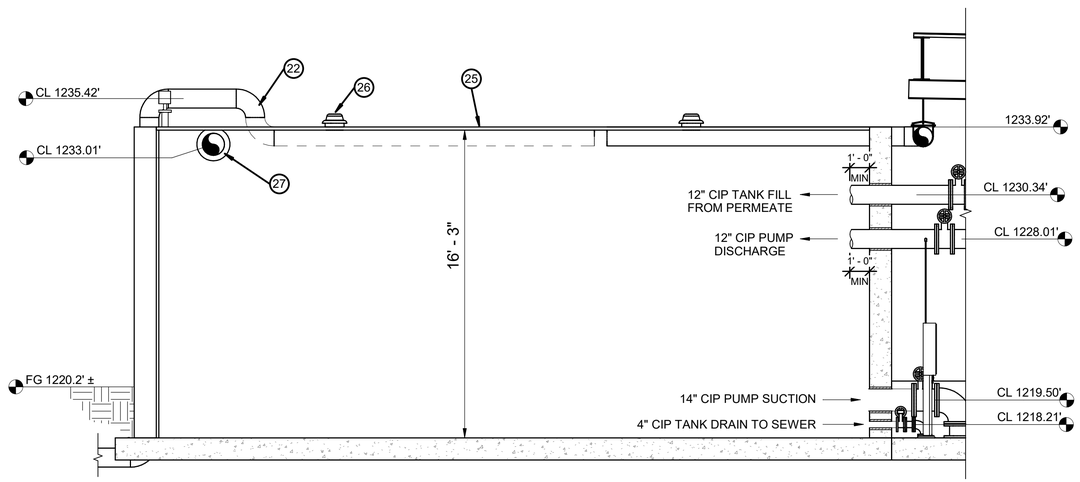

SECTION L
1/4" = 1'-0"
M-1.43

KEYED NOTES

1. MEMBRANE TRAIN NO. 1 PERMEATE/BACKPULSE PUMP
2. MEMBRANE TRAIN NO. 2 PERMEATE/BACKPULSE PUMP
3. MEMBRANE TRAIN NO. 3 PERMEATE/BACKPULSE PUMP
4. MEMBRANE TRAIN NO. 4 PERMEATE/BACKPULSE PUMP
5. CIP PUMP NO. 1
6. CIP PUMP NO. 2
7. 12" DIA DIP CIP NEUTRALIZATION TO MEMBRANE TRAIN
8. 12" DIA BUTTERFLY VALVE (TYP)
9. 16" DIA BACKPULSE SUCTION MANIFOLD
10. HANGING PIPE SUPPORT, SEE DETAIL 503 SHEET M-7.05
11. FRP BACKPULSE SUPPLY TANK, SEE SHEET M-1.48 FOR DETAILS
12. 4" DIA DIP BACKPULSE TANK DRAIN PIPE
13. PERMEATE/BACKPULSE PUMP DISCONNECT SWITCH (TYP) SEE ELECTRICAL SHEETS FOR DETAILS
14. CIP PUMP DISCONNECT SWITCH (TYP), SEE ELECTRICAL SHEETS FOR DETAILS
15. 14" X 12" REDUCER
16. 12" DIA CHECK VALVE (TYP)
17. PRESSURE GAUGE (TYP) SEE DETAIL 402 SHEET M-7.05
18. RESTRAINED FLEXIBLE COUPLING FOR BELOW GRADE DIP, SEE SPECIFICATIONS (TYP)
19. 14" CIP PUMP SUCTION
20. 12" CIP PUMP DISCHARGE
21. 12" CIP TANK FILL FROM PERMEATE
22. 12" SS AIR SUPPLY HEADER
23. 4" DIA CIP TANK DRAIN TO SEWER
24. PIPE PENETRATION (TYP), SEE DETAIL 105, SHEET M-7.01
25. EXTRUDED METAL FLAT PANEL COVER (TYP)
26. PROVIDE FLAT PANEL MODIFIED TO ACCOMODATE 12" DIA EXHAUST FAN (TYP), SEE DETAIL 406, SHEET M-7.04
27. 14" DIP CIP TANK OVERFLOW TO SEWER

NOTES:

1. PIPING BENEATH STRUCTURES TO BE CONCRETE ENCASED, PER DETAIL 103, SHEET C-7.01
2. CONTRACTOR TO COORDINATE LOCATIONS OF HANGING PIPE SUPPORTS IN FIELD WITH CANOPY SUPPORT BEAMS, SEE STRUCTURAL SHEETS.

1620 West Fountainhead Pkwy
Suite 501
Tempe, Arizona 85282
Phone: (480) 893-8860

Improving Arizona's Infrastructure Since 1942

WILSON ENGINEERS

CITY OF CHANDLER
RECLAIMED WATER INTERCONNECT FACILITY

MEMBRANE FACILITY SECTION AND DETAILS - 3

CITY PROJECT NO. WW1901.203
WILSON PROJECT NO. 21007

Design: **SZ** | Drawn: **JMJ** | Checked: **SR**
Date: **02/2022** | Wilson Project No. **21007**

Rev#	Date	Description	By

VERIFY SCALES
BAR IS ONE INCH ON ORIGINAL DRAWING
0 — 1"
IF NOT ONE INCH ON THIS SHEET, ADJUST SCALES ACCORDINGLY

Registered Professional Engineer — Certificate No. 30185 — UDAY K. GANDHE — Date Signed 02/28/2022 — ARIZONA U. S. A.

Registered Professional Engineer — Certificate No. 31044 — SREERAM RENGARAJ — Date Signed 02/28/2022 — ARIZONA U. S. A.

Sheet No. **M-1.47**

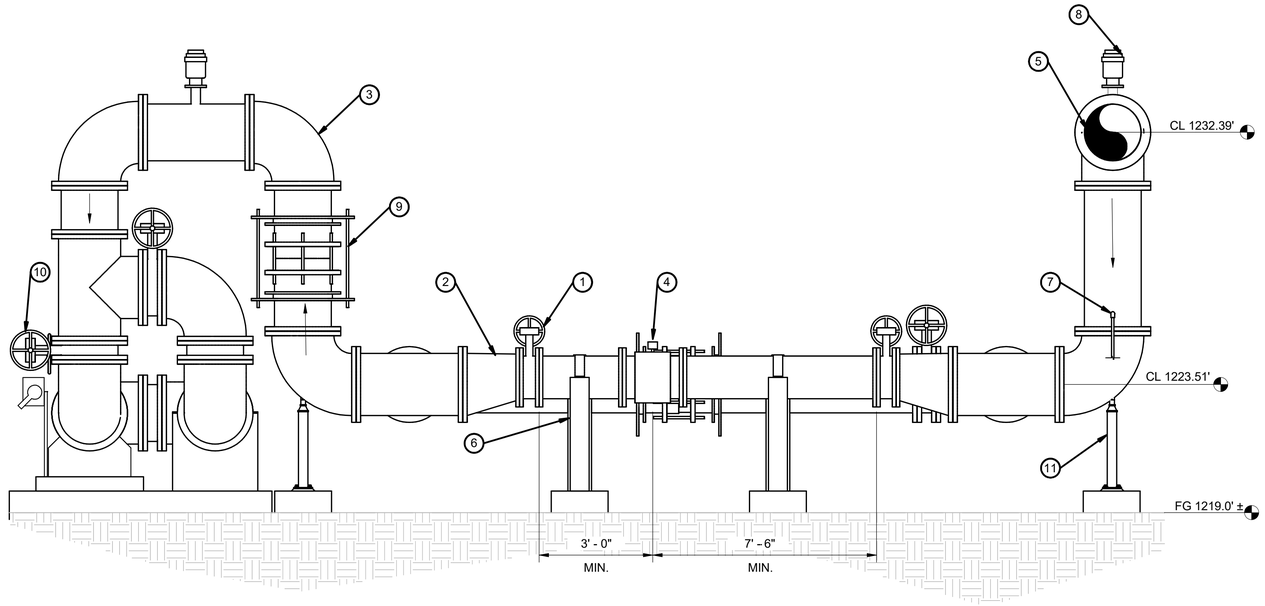

SECTION I M-1.43
3/8" = 1'-0"

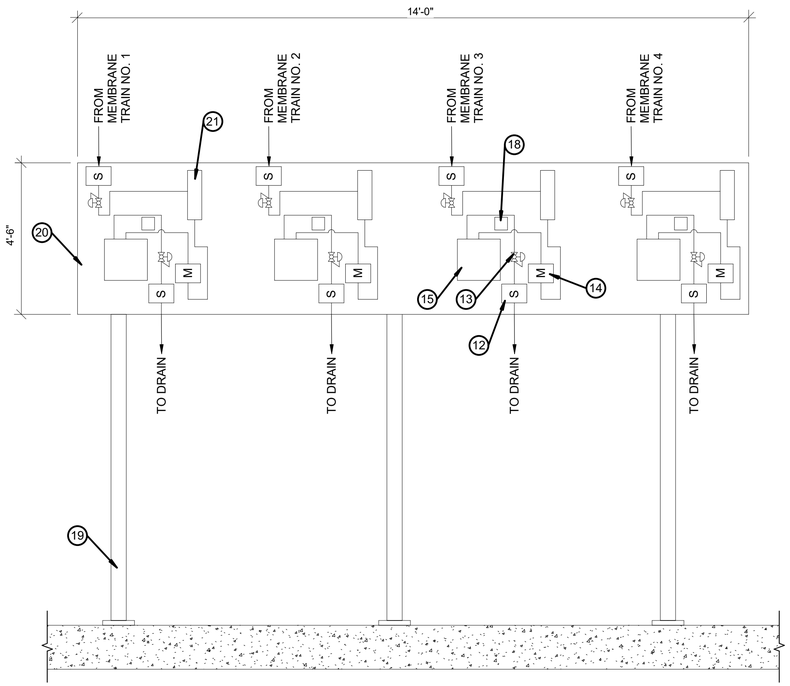

TURBIDITY ANALYZER

DETAIL 1 M-1.48
1" = 1'-0"

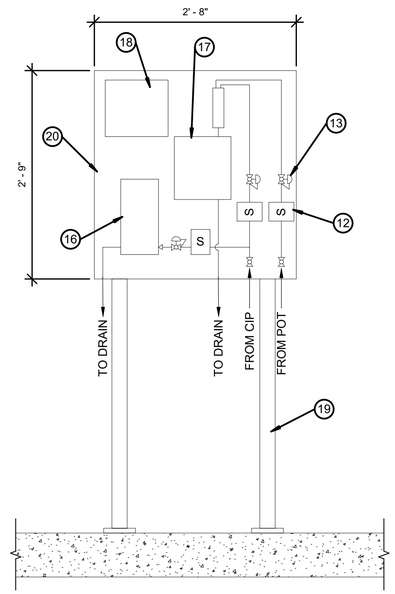

pH/CHLORINE ANALYZER

DETAIL 2 M-1.48
1" = 1'-0"

KEYED NOTES

1. 18" DIA BUTTERFLY VALVE (TYP)
2. 24" X 18" DIA ECCENTRIC REDUCER (TYP)
3. 90 DEGREE BEND (TYP)
4. 18" DIA MAGNETIC FLOW METER
5. 24" DIA COMMON PERMEATE MANIFOLD
6. CONCRETE PIPE SUPPORT, SEE STRUCTURAL SHEETS FOR DETAILS
7. 1" DIA SODIUM HYPOCHLORITE DOSAGE POINT, SEE DETAIL 603 SHEET M-7.06
8. 4" DIA COMBINATION AIR/VACUUM RELEASE VALVE (TYP), SEE DETAIL 502 SHEET M-7.05
9. RESTRAINED FLEXIBLE COUPLING (TYP), SEE DETAIL 304 SHEET M-7.03
10. 24" DIA BUTTERFLY VALVE (TYP)
11. PIPE SUPPORT (TYP), SEE DETAIL 303 SHEET M-7.03
12. SOLENOID VALVE (TYP)
13. FLOW CONTROL VALVE(TYP)
14. FLOW METER (TYP)
15. TURBIDITY ANALYZER
16. PH ANALYZER
17. CHLORINE ANALYZER
18. ANALYZER TRANSMITTER (TYP)
19. EQUIPMENT UNISTRUT, SEE DETAIL 704, SHEET M07.07 (TYP)
20. SEE INSTUMENTATION SHEETS FOR DETAILS
21. DEGASSING COLUMN

1620 West Fountainhead Pkwy
Suite 501
Tempe, Arizona 85282
Phone: (480) 893-8860

Improving Arizona's Infrastructure Since 1942

WILSON ENGINEERS

CITY OF CHANDLER
RECLAIMED WATER INTERCONNECT FACILITY

MEMBRANE FACILITY SECTIONS AND DETAILS - 4

CITY PROJECT NO. WW1901.203
WILSON PROJECT NO. 21007

Design: SZ	Drawn: JMJ	Checked: SR
Date: 02/2022	Wilson Project No. 21007	

Rev#	Date	Description	By

VERIFY SCALES
BAR IS ONE INCH ON ORIGINAL DRAWING
0 1"
IF NOT ONE INCH ON THIS SHEET, ADJUST SCALES ACCORDINGLY

Registered Professional Engineer (Civil) CERTIFICATE NO. 30185 UDAY K. GANDHE Date Signed 02/28/2022 ARIZONA U. S. A.

Registered Professional Engineer (Civil) CERTIFICATE NO. 31084 SREERAM RENGARAJ Date Signed 02/28/2022 ARIZONA U. S. A.

Sheet No. **M-1.48**

2/25/2022 4:39:04 PM \\phxss01\Data\PROJECT_Revit\05 Chandler Airport WRF\21007\1.0 Membrane Structure.rvt

AGENCY REVIEW

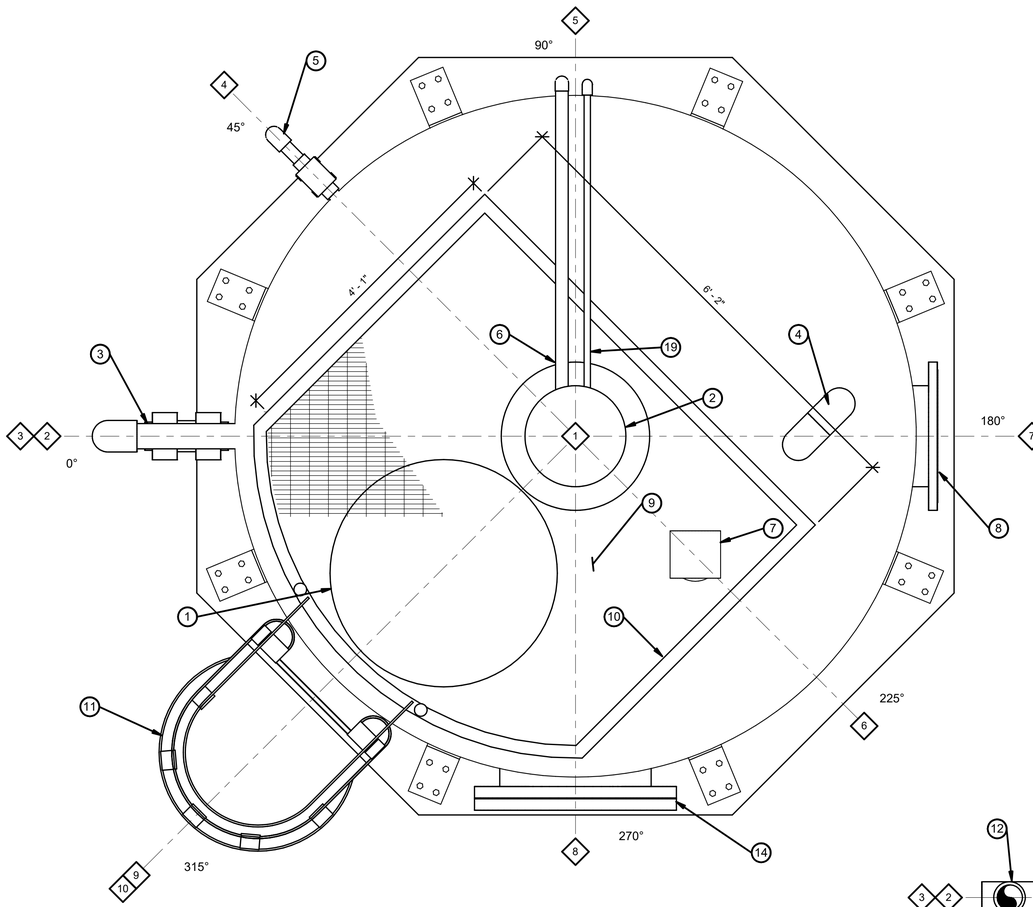

BACKPULSE TANK TOP ORIENTATION DIAGRAM

DETAIL A
1" = 1'-0"
M-1.49

DESCRIPTION	POSITION	SIZE (DIA)	CL EL*
FILL LINE	1	16"	-
OVERFLOW OUTLET	2	4"	11'-6"
TANK DRAIN	3	4"	8"
TANK LEVEL GAUGE	4	2"	-
POTABLE WATER LINE	5	2"	13'-2"
LEVEL SENSOR	6	3"	-
SUCTION OUTLET	7	16"	1'-8"
SIDE MANWAY	8	24"	1'-8"
LADDER	9	-	-
ROOF MANWAY	10	36"	-

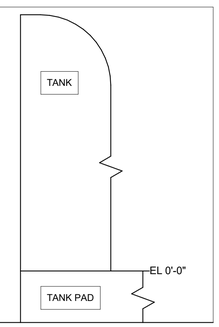

*℄ HEIGHT IS FROM TOP OF TANK PAD

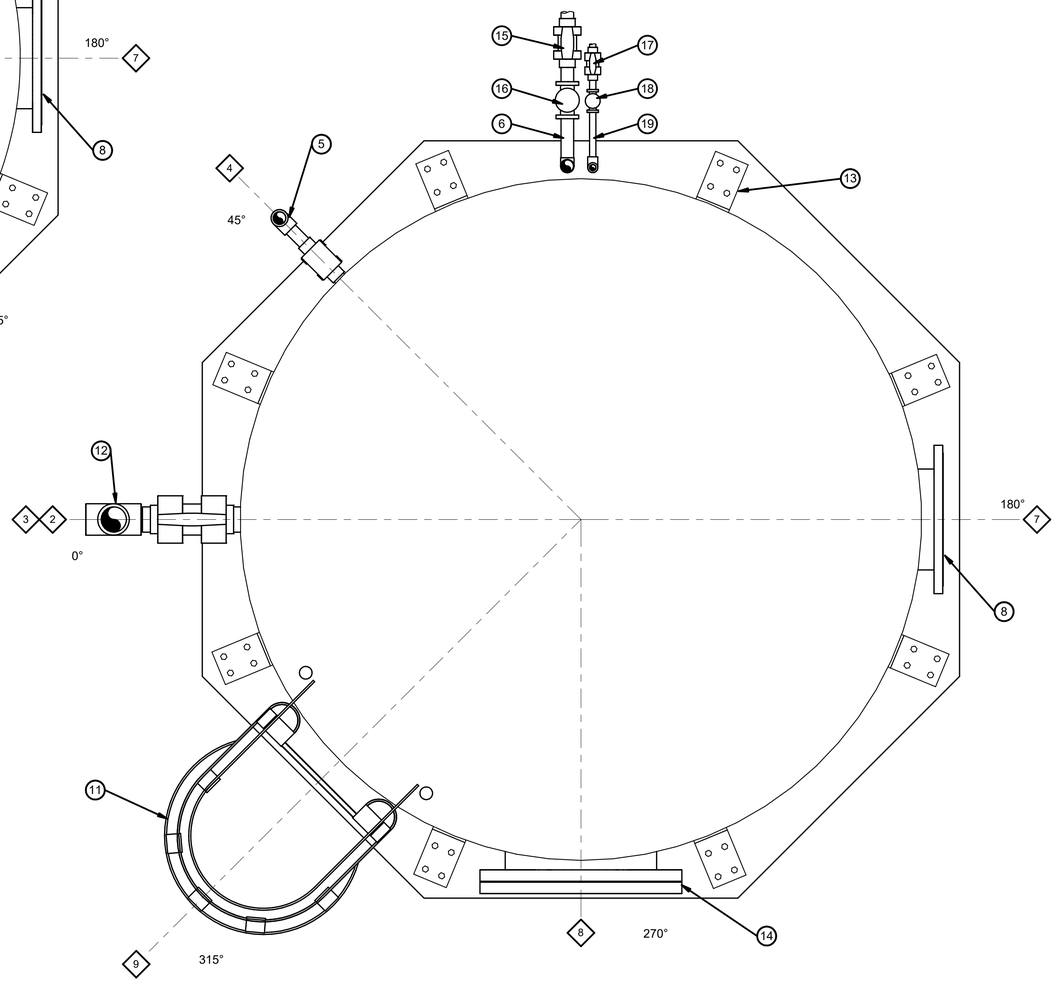

BACKPULSE TANK TOP LOWER DIAGRAM

DETAIL B
1" = 1'-0"
M-1.49

KEYED NOTES

1. 36" DIA MANWAY WITH BLIND FLANGE USE 316 SS NUTS AND BOLTS
2. 16" DIA DIP BACKPULSE TANK FILL PORT, SEE DETAIL A SHEET M-1.49
3. 4" DIA PVC OVERFLOW PORT
4. 4" DIA PVC GOOSENECK TANK VENT, SEE DETAIL 205 SHEET M-7.02
5. 2" DIA CLEAR PVC TANK LEVEL GAUGE
6. 2" DIA COPPER POTABLE WATER PIPE
7. 3" DIA PORT FOR LEVEL SENSOR
8. 16" DIA SUCTION TRANSFER PORT, SEE DETAIL A SHEET M-1.49
9. REMOVABLE FRP GRATING ABOVE 36" DIA MANWAY
10. FRP GUARDRAIL
11. LADDER WITH SAFETY CAGE AS REQUIRED TO MEET OSHA STANDARDS, SEE DETAIL B, SHEET M-1.49
12. 4" DIA PVC DRAIN PORT, SEE DETAIL A SHEET M-1.49
13. TANK TIE DOWN (TYP), SEE STRUCTURAL SHEETS FOR DETAILS
14. 24" DIA SIDE MANWAY WITH BLIND FLANGE USE 316 SEE NUTS AND BOLTS
15. 2" DIA CPVC BALL VALVE
16. 2" DIA CPVC CHECK VALVE
17. 1" DIA CPVC BALL VALVE
18. 1" DIA CPVC CHECK VALVE
19. 1" DIA CPVC SODIUM HYPOCHLORITE PIPE

1620 West Fountainhead Pkwy
Suite 501
Tempe, Arizona 85282
Phone: (480) 893-8860

Improving Arizona's Infrastructure Since 1942

WILSON ENGINEERS

CITY OF CHANDLER
RECLAIMED WATER INTERCONNECT FACILITY

MEMBRANE FACILITY BACKPULSE TANK ORIENTATION PLAN AND DETAILS

CITY PROJECT NO.WW1901.203
WILSON PROJECT NO. 21007

Design: SZ
Date: 02/2022
Drawn: JMJ
Wilson Project No. 21007
Checked: SR

Rev#	Date	Description	By

VERIFY SCALES
BAR IS ONE INCH ON ORIGINAL DRAWING
0 1"
IF NOT ONE INCH ON THIS SHEET, ADJUST SCALES ACCORDINGLY

Registered Professional Engineer (Civil)
30185
UDAY K. GANDHE
Date Signed 02/28/2022
ARIZONA U. S. A.

Registered Professional Engineer (Civil)
CERTIFICATE NO.
41644
SREERAM RENGARAJ
Date Signed 02/28/2022
ARIZONA U. S. A.

Sheet No. **M-1.49**

AGENCY REVIEW

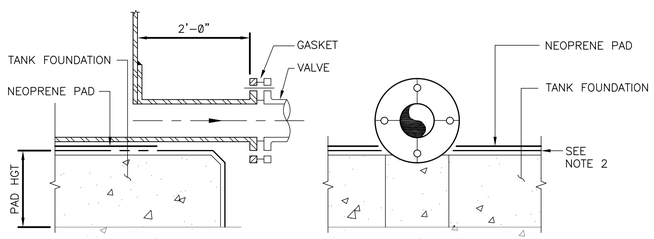

FLANGED DRAIN

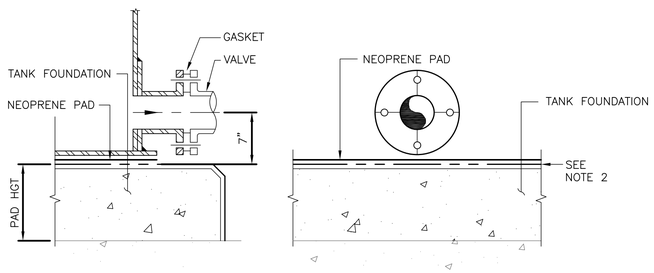

INTEGRALLY FLANGED TRANSFER FEED

DETAIL	A
NOT TO SCALE	–

NOTE:
1. TANK FOUNDATION AND CONTAINMENT AREA FLOOR TO BE CHEMICAL COATED, SEE SPECIFICATIONS FOR DETAILS.
2. NEOPRENE PAD 1/2" THICK TO BE PLACED UNDERNEATH ENTIRE FRP TANK AND ON TOP OF CONCRETE TANK PAD.

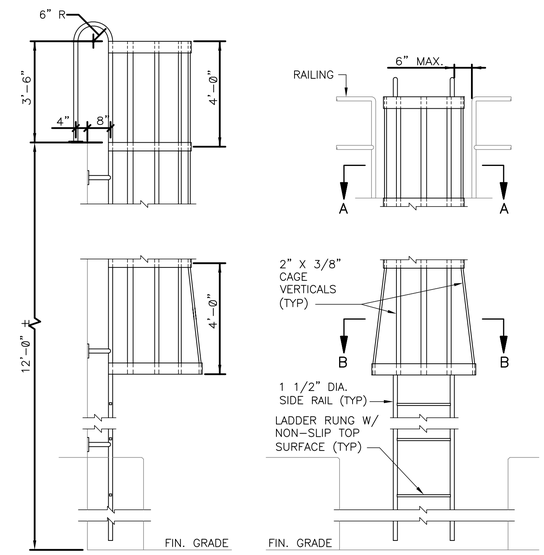

LADDER WITH CAGE ELEVATIONS

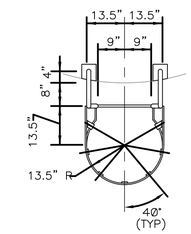

SECTION A–A

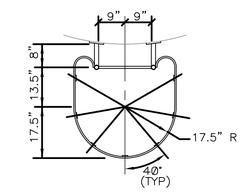

SECTION B–B

PLANS

DETAIL	B
NOT TO SCALE	–

GENERAL LADDER NOTES:

1. PROVIDE SHOP FABRICATED LADDERS PER SPECIFICATIONS.
2. PROVIDE CAGE ON LADDERS AS REQUIRED TO MEET OSHA STANDARDS.

WILSON ENGINEERS
1620 West Fountainhead Pkwy
Suite 501
Tempe, Arizona 85282
Phone: (480) 893-8860
Improving Arizona's Infrastructure Since 1942

CITY OF CHANDLER
RECLAIMED WATER INTERCONNECT FACILITY

MEMBRANE FACILITY
BACKPULSE TANK DETAILS
CITY PROJECT NO. WW1901.203
WILSON PROJECT NO. 21007

Design: SZ	Drawn: JMJ	Checked: SR
Date: 02/2022	Wilson Project No.: 21007	

Rev#	Date	Description	By

VERIFY SCALES
BAR IS ONE INCH ON ORIGINAL DRAWING
0 1"
IF NOT ONE INCH ON THIS SHEET, ADJUST SCALES ACCORDINGLY

Registered Professional Engineer (Civil) CERTIFICATE NO. 30185 UDAY K. GANDHE Date Signed 02/28/2022 ARIZONA U.S.A.

Registered Professional Engineer (Civil) CERTIFICATE NO. 41008 SREERAM RENGARAJ Date Signed 02/28/2022 ARIZONA U.S.A.

Sheet No. M–1.50

XREFS: 21007 M149.1; 21007 M149.2; TB-WE-D; SEAL-UKG; SEAL-SR

G:\PROJECT\21007\CADD\DESIGN\MECHANICAL\21007 M-1.50.DWG, 2/25/2022 3:11:36 PM, ckilday, 1:2.19

AGENCY REVIEW

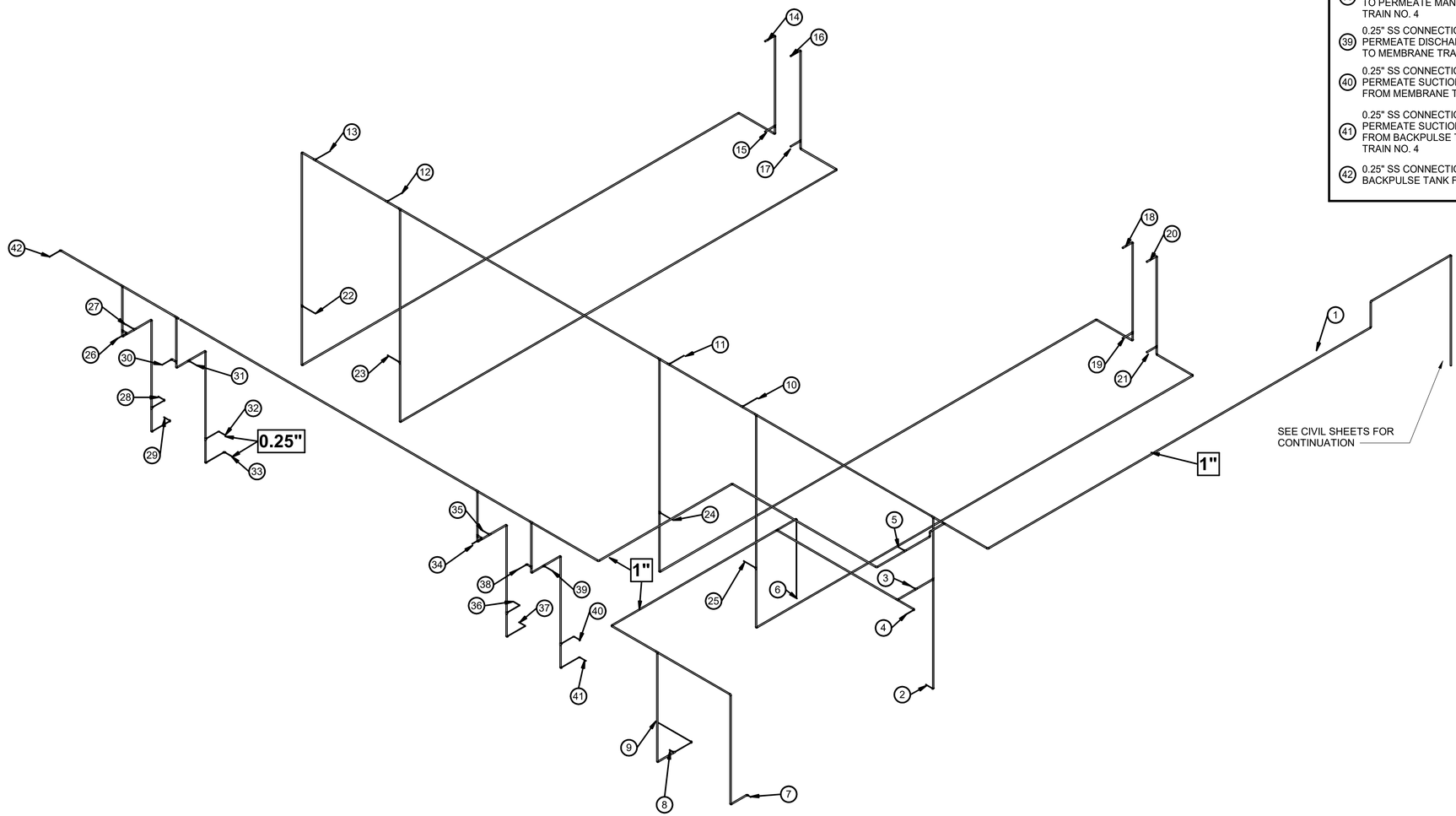

ISOMETRIC - INSTRUMENT AIR FOR CONTROL VALVES

DETAIL A M-1.51

1/4" = 1'-0"

NOTE:

1. MEMBRANE FACILITY CONTROL VALVES ARE ACTUATED BY INSTRUMENT AIR FROM AIR COMPRESSORS. CONTRACTOR TO FIELD ROUTE COMPRESSED AIR PIPING TO CONTROL VALVES.

KEYED NOTES

1. 1" DIA SS COMPRESSED AIR HEADER
2. 0.25" SS CONNECTION TO 14" DIA CIP SUCTION ISOLATION VALVE
3. 0.25" SS CONNECTION TO 12" DIA CIP DISCHARGE TO CIP TANK ISOLATION VALVE
4. 0.25" SS CONNECTION TO 12" DIA CIP DISCHARGE TO SEWER ISOLATION VALVE
5. 0.25" SS CONNECTION TO 12" DIA CIP TANK FILL FROM PERMEATE ISOLATION VALVE
6. 0.25" SS CONNECTION TO 12" DIA CIP DISCHARGE INTERCHANGE VALVE
7. 0.25" SS CONNECTION TO 12" DIA CIP PUMP NO. 2 SUCTION ISOLATION VALVE
8. 0.25" SS CONNECTION TO 12" DIA CIP PUMP NO. 1 SUCTION ISOLATION VALVE
9. 0.25" SS CONNECTION TO 12" DIA CIP SUCTION INTERCHANGE VALVE
10. 0.25" SS CONNECTION TO 12" DIA AIR SCOUR ISOLATION VALVE FOR MEMBRANE TRAIN NO. 4
11. 0.25" SS CONNECTION TO 12" DIA AIR SCOUR ISOLATION VALVE FOR MEMBRANE TRAIN NO. 3
12. 0.25" SS CONNECTION TO 12" DIA AIR SCOUR ISOLATION VALVE FOR MEMBRANE TRAIN NO. 2
13. 0.25" SS CONNECTION TO 12" DIA AIR SCOUR ISOLATION VALVE FOR MEMBRANE TRAIN NO. 1
14. 0.25" SS CONNECTION TO 20" DIA MEMBRANE TRAIN NO. 1 FEED VALVE
15. 0.25" SS CONNECTION TO 24" DIA MEMBRANE TRAIN NO. 1 DRAIN VALVE
16. 0.25" SS CONNECTION TO 20" DIA MEMBRANE TRAIN NO. 2 FEED VALVE
17. 0.25" SS CONNECTION TO 24" DIA MEMBRANE TRAIN NO. 2 DRAIN VALVE
18. 0.25" SS CONNECTION TO 20" DIA MEMBRANE TRAIN NO. 3 FEED VALVE
19. 0.25" SS CONNECTION TO 24" DIA MEMBRANE TRAIN NO. 3 DRAIN VALVE
20. 0.25" SS CONNECTION TO 20" DIA MEMBRANE TRAIN NO. 4 FEED VALVE
21. 0.25" SS CONNECTION TO 24" DIA MEMBRANE TRAIN NO. 4 DRAIN VALVE
22. 0.25" SS CONNECTION TO 12" DIA CIP SUPPLY VALVE FOR MEMBRANE TRAIN NO. 1
23. 0.25" SS CONNECTION TO 12" DIA CIP SUPPLY VALVE FOR MEMBRANE TRAIN NO. 2
24. 0.25" SS CONNECTION TO 12" DIA CIP SUPPLY VALVE FOR MEMBRANE TRAIN NO. 3
25. 0.25" SS CONNECTION TO 12" DIA CIP SUPPLY VALVE FOR MEMBRANE TRAIN NO. 4
26. 0.25" SS CONNECTION TO 12" DIA PERMEATE DISCHARGE ISOLATION VALVE TO PERMEATE MANIFOLD FOR MEMBRANE TRAIN NO. 1
27. 0.25" SS CONNECTION TO 14" DIA PERMEATE DISCHARGE ISOLATION VALVE TO MEMBRANE TRAIN NO. 1
28. 0.25" SS CONNECTION TO 14" DIA PERMEATE SUCTION ISOLATION VALVE FROM MEMBRANE TRAIN NO. 1
29. 0.25" SS CONNECTION TO 16" DIA PERMEATE SUCTION ISOLATION VALVE FROM BACKPULSE TANK FOR MEMBRANE TRAIN NO. 1
30. 0.25" SS CONNECTION TO 12" DIA PERMEATE DISCHARGE ISOLATION VALVE TO PERMEATE MANIFOLD FOR MEMBRANE TRAIN NO. 2
31. 0.25" SS CONNECTION TO 14" DIA PERMEATE DISCHARGE ISOLATION VALVE TO MEMBRANE TRAIN NO. 2
32. 0.25" SS CONNECTION TO 14" DIA PERMEATE SUCTION ISOLATION VALVE FROM MEMBRANE TRAIN NO. 2
33. 0.25" SS CONNECTION TO 16" DIA PERMEATE SUCTION ISOLATION VALVE FROM BACKPULSE TANK FOR MEMBRANE TRAIN NO. 2
34. 0.25" SS CONNECTION TO 12" DIA PERMEATE DISCHARGE ISOLATION VALVE TO PERMEATE MANIFOLD FOR MEMBRANE TRAIN NO. 3
35. 0.25" SS CONNECTION TO 14" DIA PERMEATE DISCHARGE ISOLATION VALVE TO MEMBRANE TRAIN NO. 3
36. 0.25" SS CONNECTION TO 14" DIA PERMEATE SUCTION ISOLATION VALVE FROM MEMBRANE TRAIN NO. 3
37. 0.25" SS CONNECTION TO 16" DIA PERMEATE SUCTION ISOLATION VALVE FROM BACKPULSE TANK FOR MEMBRANE TRAIN NO. 3
38. 0.25" SS CONNECTION TO 12" DIA PERMEATE DISCHARGE ISOLATION VALVE TO PERMEATE MANIFOLD FOR MEMBRANE TRAIN NO. 4
39. 0.25" SS CONNECTION TO 14" DIA PERMEATE DISCHARGE ISOLATION VALVE TO MEMBRANE TRAIN NO. 4
40. 0.25" SS CONNECTION TO 14" DIA PERMEATE SUCTION ISOLATION VALVE FROM MEMBRANE TRAIN NO. 4
41. 0.25" SS CONNECTION TO 16" DIA PERMEATE SUCTION ISOLATION VALVE FROM BACKPULSE TANK FOR MEMBRANE TRAIN NO. 4
42. 0.25" SS CONNECTION TO 12" DIA BACKPULSE TANK FILL ISOLATION VALVE

WILSON ENGINEERS
1620 West Fountainhead Pkwy
Suite 501
Tempe, Arizona 85282
Phone: (480) 893-8860
Improving Arizona's Infrastructure Since 1942

CITY OF CHANDLER
RECLAIMED WATER INTERCONNECT FACILITY

MEMBRANE FACILITY SECTION AND DETAILS - 5

CITY PROJECT NO. WW1901.203
WILSON PROJECT NO. 21007

Design: **SZ** Date: **02/2022** | Drawn: **JMJ** Wilson Project No. **21007** | Checked: **SR**

Rev#	Date	Description	By

VERIFY SCALES
BAR IS ONE INCH ON ORIGINAL DRAWING
0 — 1"
IF NOT ONE INCH ON THIS SHEET, ADJUST SCALES ACCORDINGLY

Registered Professional Engineer — Civil — 30185 — UDAY K. GANDHE — Date Signed 02/28/2022 — ARIZONA U.S.A.

Registered Professional Engineer — Civil — 41084 — SREERAM RENGHRAJ — Date Signed 02/28/2022 — ARIZONA U.S.A.

Sheet No. **M-1.51**

AGENCY REVIEW

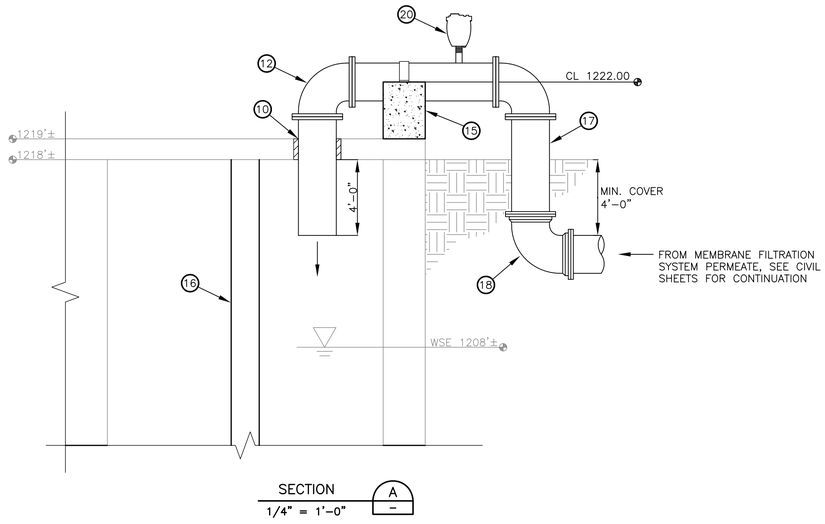

SECTION
1/4" = 1'-0"
A

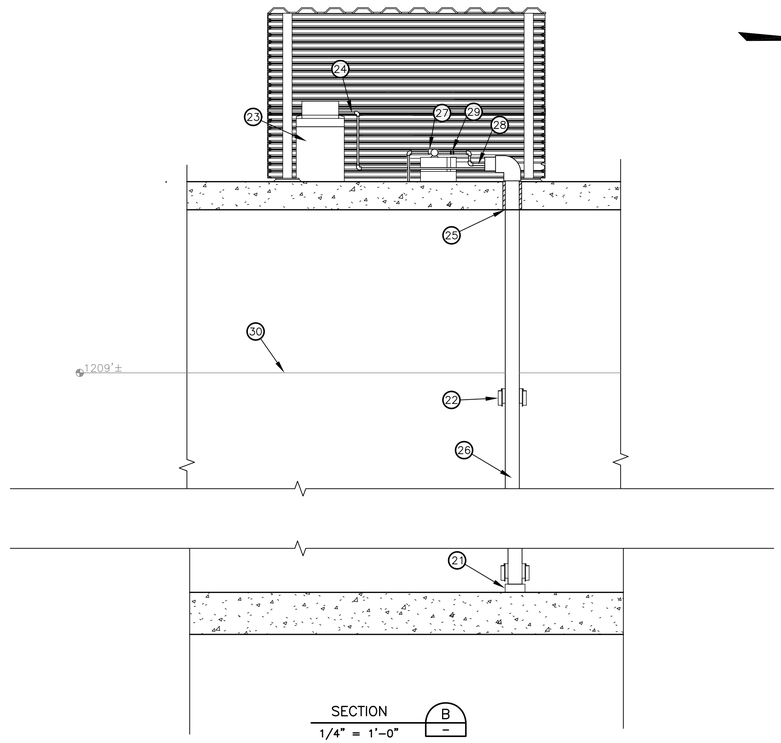

SECTION
1/4" = 1'-0"
B

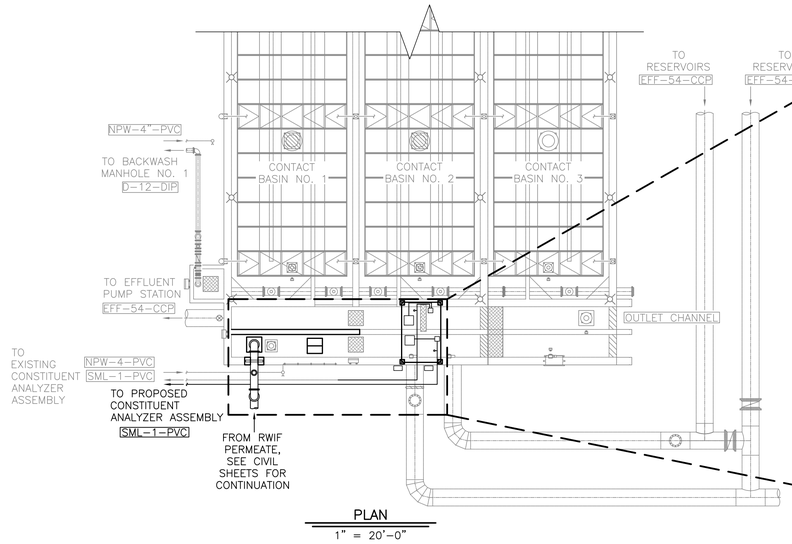

PLAN
1" = 20'-0"

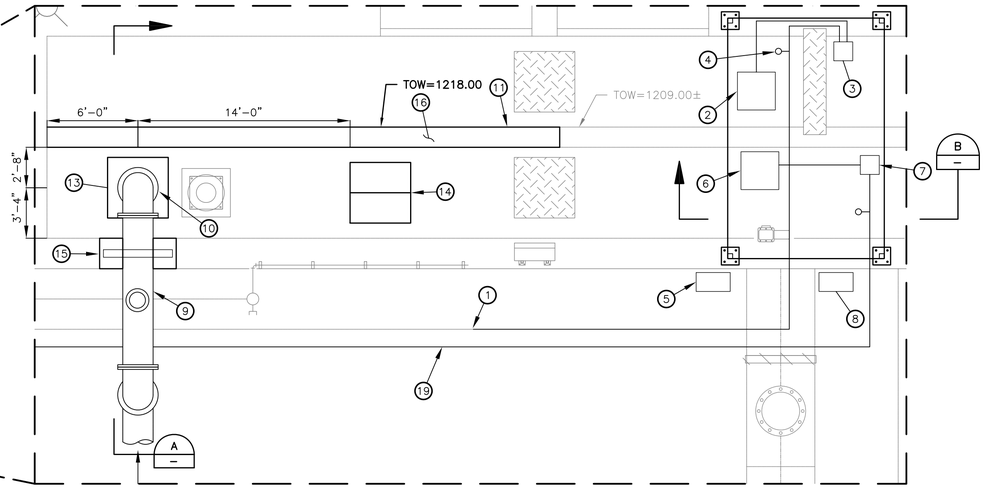

PLAN
1" = 5'-0"

NOTE:
1. SHADE CANOPY ABOVE SAMPLER NOT SHOWN FOR CLARITY, SEE STRUCTURAL SHEETS FOR DETAILS.

KEYED NOTES

1. CONNECT THE 1" PVC PIPELINE TO THE EXISTING CHLORINE ANALYZER ASSEMBLY LOCATED AT THE EPS PRE-FABRICATED ELECTRICAL ENCLOSURE
2. COMPOSITE SAMPLER RELOCATED FROM EXISTING LOCATION
3. CHLORINE CONTACT BASIN OUTLET CHANNEL SAMPLE PUMP NO. 2 RELOCATED FROM EXISTING LOCATION
4. 1/2" DIA PVC SAMPLE LINE WITH BALL VALVE (TYP)
5. CHLORINE ANALYZER SAMPLE PUMP CONTROL PANEL RELOCATED FROM EXISTING LOCATION
6. AWRF & RWIF BLENDED EFFLUENT COMPOSITE SAMPLER, SEE DETAIL B THIS SHEET
7. AWRF & RWIF BLENDED EFFULENT SAMPLE PUMP
8. CHLORINE ANALYZER SAMPLE PUMP CONTROL PANEL
9. 24" DIA DIP PERMEATE PIPE FROM RWIF MEMBRANE FILTRATION SYSTEM PERMEATE
10. PIPE PENETRATION, SEE DETAIL 104 SHEET M-7.01
11. PROPOSED PARTITION WALL, SEE STRUCTURAL SHEETS FOR DETAILS
12. 24" DIA DIP FL X FL DIP 90 DEGREE BEND (TYP)
13. CONCRETE INFILL, SEE STRUCTURAL SHEETS FOR DETAILS
14. 4'-0" X 4'-0" DOUBLE LEAF ALUMINUM ACCESS HATCH
15. CONCRETE PIPE SUPPORT, SEE STRUCTURAL SHEETS FOR DETAILS
16. CONCRETE WALL EXTENDED FROM TOP OF EXISTING BAFFLE WALL TO BOTTOM OF EXISTING SLAB, SEE STRUCTURAL SHEETS FOR DETAILS
17. 24" DIA DIP FL X MJ SPOOL PIECE
18. 24" DIA DIP MJ X MJ DIP 90 DEGREE BEND
19. ROUTE 1" DIA PVC PIPE TO NEW CHLORINE ANALYZER ASSEMBLY LOCATED AT THE EDS PRE-FABRICATED ELECTRICAL ENCLOSURE
20. 4" DIA COMBINATION AIR/VACUUM RELEASE VALVE, SEE DETAIL 502 SHEET M-7.05
21. FLANGED END ANCHORED TO FLOOR WITH SST WEDGE ANCHORS, MIN 2 1/2" EMBEDMENT
22. 6" PIPE STILLING WELL TO HAVE 3 COLUMNS OF 1/2" DIAMETER HOLES (5" ON CENTER)
23. INSTALL CCB AUTOSAMPLER AND ANCILLARY EQUIPMENT
24. 3/4" SAMPLE LINE
25. PIPE PENETRATION WITH SEAL, SEE DETAIL 104, SHEET M-7.01
26. VERTICAL PIPE SUPPORT, SEE DETAIL 505, SHEET M-7.05
27. INSTALL SAMPLE PUMP
28. SAMPLE LINE SUCTION FROM STILLING WELL
29. SAMPLE LINE SUCTIONBALL VALVE
30. TOP OF EXISTING WEIR

1620 West Fountainhead Pkwy
Suite 501 85282
Tempe, Arizona
Phone: (480) 893-8860
Improving Arizona's Infrastructure Since 1942
WILSON ENGINEERS

CITY OF CHANDLER
RECLAIMED WATER INTERCONNECT FACILITY
AWRF MODIFIED CHLORINE CONTACT BASIN – PLAN AND SECTION
CITY PROJECT NO. WW1901.203
WILSON PROJECT NO. 21007

Design: KP	Drawn: JMJ	Checked: SR
Date: 02/2022	Wilson Project No.: 21007	

Rev#	Date	Description	By

VERIFY SCALES
BAR IS ONE INCH ON ORIGINAL DRAWING
0 1"
IF NOT ONE INCH ON THIS SHEET, ADJUST SCALES ACCORDINGLY





Sheet No. **M-1.61**

AGENCY REVIEW

XREFS: TB-WE-D; 21007 M171; 21007 M161; SEAL-UKG; SEAL-SR

G:\PROJECT\21007\CADD\DESIGN\MECHANICAL\21007 M-1.61.DWG, 2/25/2022 2:30:56 PM, acantella, 1:2.188679

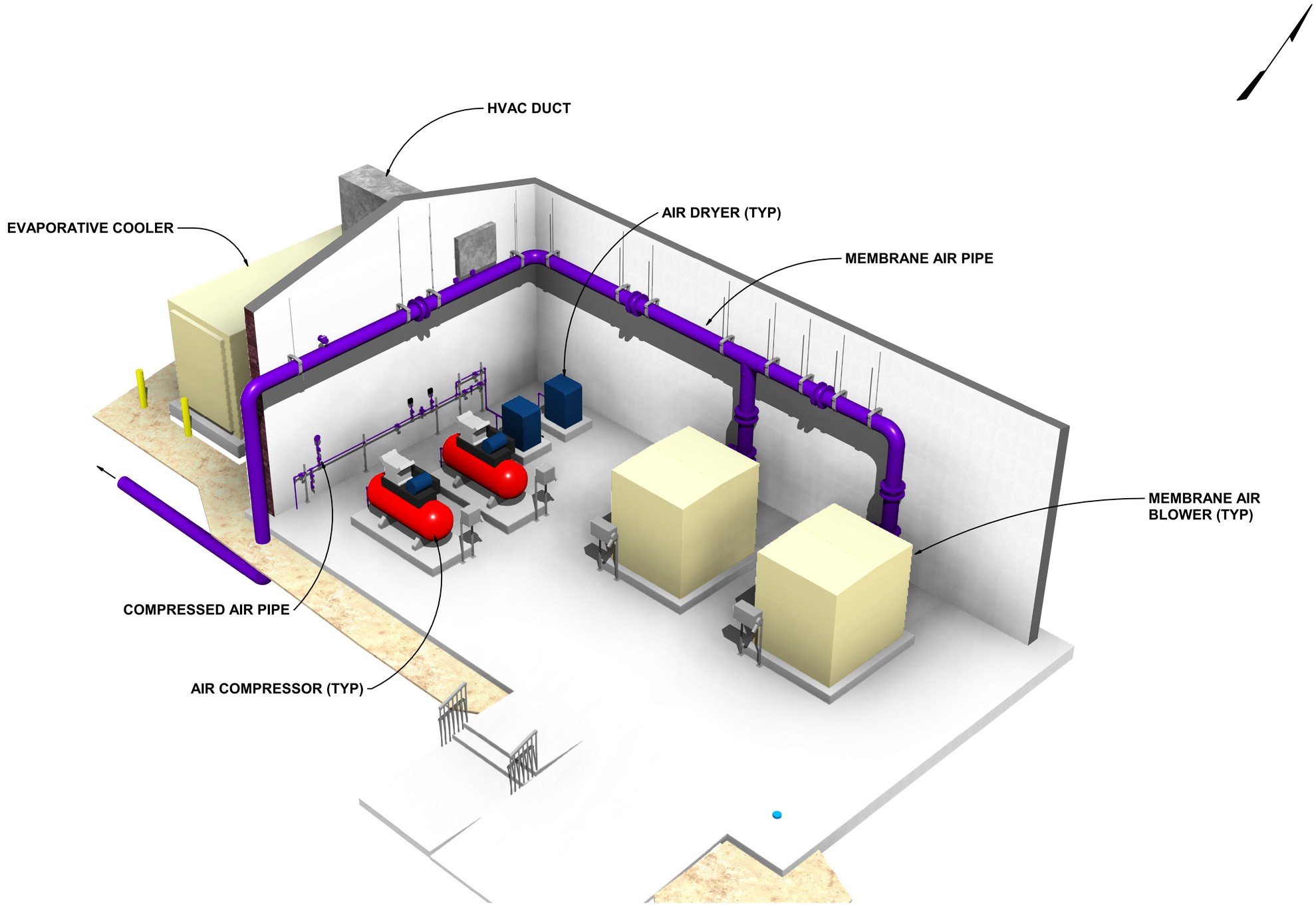

1620 West Fountainhead Pkwy
Suite 501
Tempe, Arizona 85282
Phone: (480) 893-8860

Improving Arizona's Infrastructure Since 1942

WILSON ENGINEERS

CITY OF CHANDLER
RECLAIMED WATER INTERCONNECT FACILITY

RWIF BLOWER BUILDING RENDERING

CITY PROJECT NO. WW1901.203
WILSON PROJECT NO. 21007

Design: KP	Drawn: JMJ	Checked: SR
Date: 02/2022	Wilson Project No. 21007	

Rev#	Date	Description	By

VERIFY SCALES
BAR IS ONE INCH ON ORIGINAL DRAWING
0 1"
IF NOT ONE INCH ON THIS SHEET, ADJUST SCALES ACCORDINGLY

Registered Professional Engineer (Civil)
CERTIFICATE NO. 30185
UDAY K. GANDHE
Date Signed 02/28/2022
ARIZONA U. S. A.

Registered Professional Engineer (Civil)
CERTIFICATE NO. 41008
SHEEKAM RENGHRAJ
Date Signed 02/28/2022
ARIZONA U. S. A.

Sheet No. M-1.81

2/25/2022 3:05:25 PM G:\PROJECT_Revit\05 Chandler Airport WRF\21007\3.0 Blower Building.rvt

AGENCY REVIEW

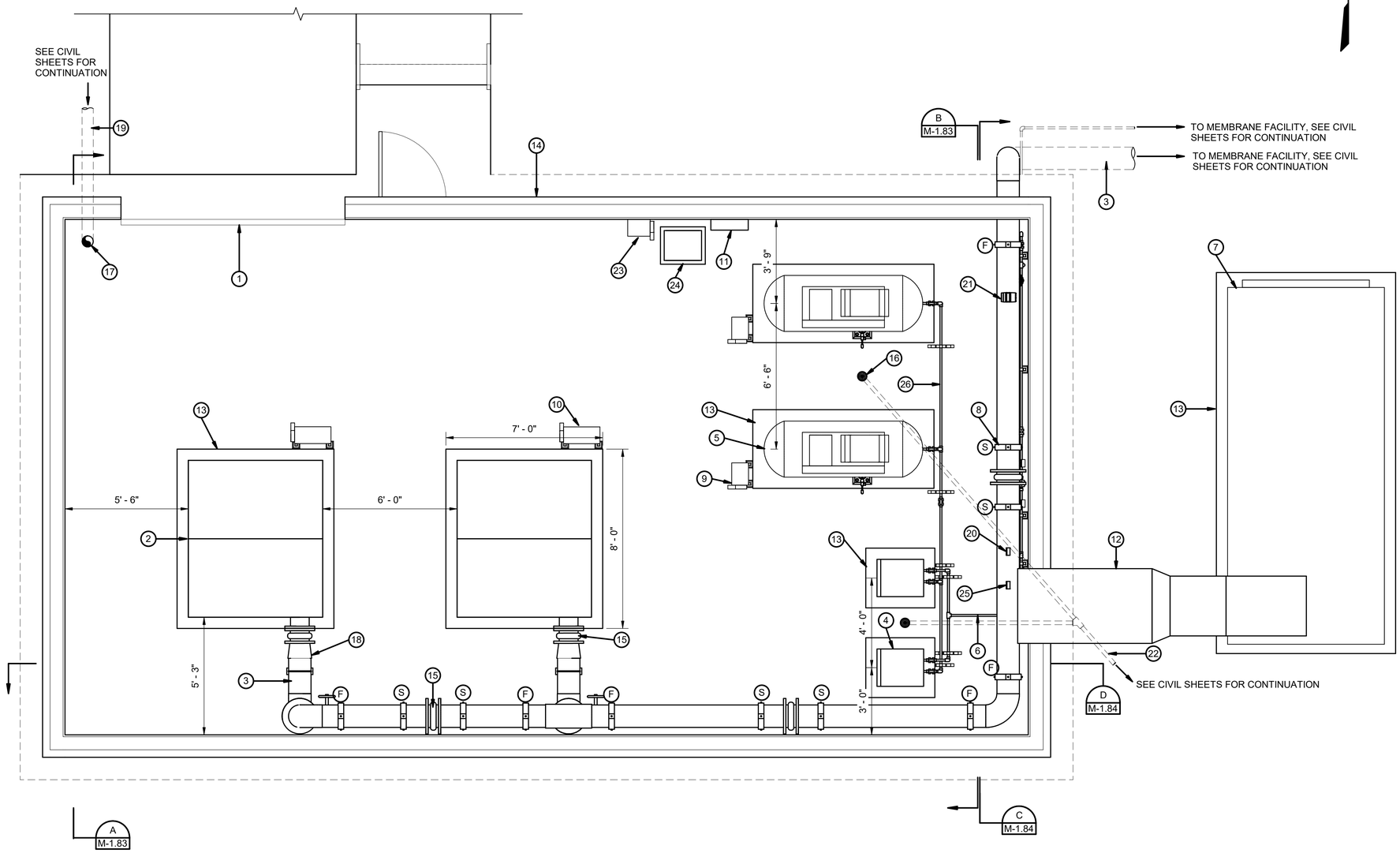

OVERALL PLAN

3/8" = 1'-0"

NOTE:

(F): FIXED SUPPORT

(S): SLIDING SUPPORT

KEYED NOTES

1. 10'-0" x 10'-0" ROLL UP DOOR
2. POSITIVE DISPLACEMENT BLOWER (TYP)
3. 12" DIA INSULATED SCH 10 SS PROCESS AIR SUPPLY PIPE
4. AIR DRYER (TYP)
5. AIR COMPRESSOR (TYP)
6. 1" DIA STAINLESS STEEL COMPRESSED AIR PIPE
7. EVAPORATIVE COOLER UNIT, SEE HVAC SHEETS FOR DETAILS
8. HANGING PIPE SUPPORT (TYP), SEE DETAIL 503 SHEET M-7.05
9. AIR COMPRESSOR DISCONNECT SWITCH (TYP), SEE ELECTRICAL SHEETS FOR DETAILS
10. POSITIVE DISPLACEMENT BLOWER DISCONNECT SWITCH (TYP), SEE ELECTRICAL SHEETS FOR DETAILS
11. LIGHTING PANEL, SEE ELECTRICAL SHEETS FOR DETAILS
12. HVAC DUCT, SEE HVAC SHEETS FOR DETAILS
13. EQUIPMENT PAD (TYP), SEE STRUCTURAL SHEETS FOR DETAILS
14. PRE-FABRICATED BUILDING, SEE ARCHITECTURAL SHEETS FOR DETAILS
15. RUBBER EXPANSION JOINT (TYP), SEE DETAIL 301 SHEET M-7.03
16. FLOOR DRAIN (TYP), SEE DETAIL 704 SHEET M-7.07
17. FIRE RISER, SEE ARCHITECTURAL SHEETS FOR DETAILS
18. 10" X 12" REDUCER (TYP)
19. 6" DIA FIRE PROTECTION MAIN
20. PRESSURE INDICATING TRANSMITTER
21. THERMAL MASS FLOW METER, SEE DETAIL 604 SHEET M-7.06
22. 2" DIA PVC DRAIN PIPE
23. DISCONNECT SWITCH, SEE ELECTRICAL SHEETS FOR DETAILS
24. TRANSFORMER, SEE ELECTRICAL SHEETS FOR DETAILS
25. FLOW SWITCH, SEE ELECTRICAL SHEETS FOR DETAILS
26. 1" DIA COPPER COMPRESSED AIR PIPE

1620 West Fountainhead Pkwy
Suite 501
Tempe, Arizona 85282
Phone: (480) 893-8860

Improving Arizona's Infrastructure Since 1942

WILSON ENGINEERS

CITY OF CHANDLER
RECLAIMED WATER INTERCONNECT FACILITY

RWIF BLOWER BUILDING OVERALL PLAN

CITY PROJECT NO. WW1901203
WILSON PROJECT NO. 21007

Design: KP	Drawn: JMJ	Checked: SR
Date: 02/2022	Wilson Project No. 21007	

Rev#	Date	Description	By

VERIFY SCALES

BAR IS ONE INCH ON ORIGINAL DRAWING

0 1"

IF NOT ONE INCH ON THIS SHEET, ADJUST SCALES ACCORDINGLY

Registered Professional Engineer
30185
UDAY K. GANDHE
Date Signed 02/28/2022
ARIZONA U.S.A.

Registered Professional Engineer
41084
PRAVEEN RENGARAJ
CERTIFICATE NO.
Date Signed 02/28/2022
ARIZONA U.S.A.

Sheet No. M-1.82

AGENCY REVIEW

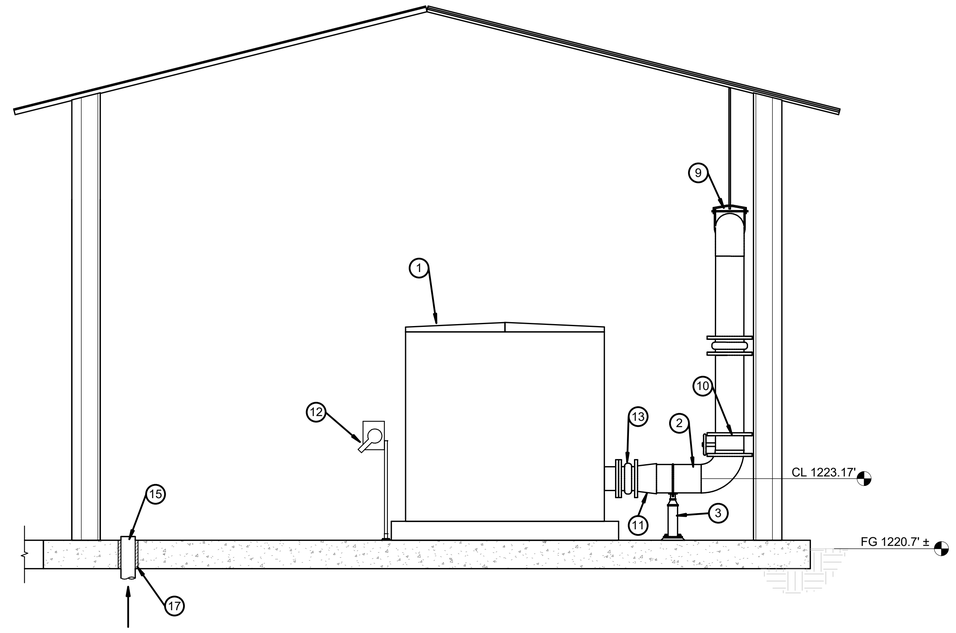

SECTION A
3/8" = 1'-0"
M-1.82

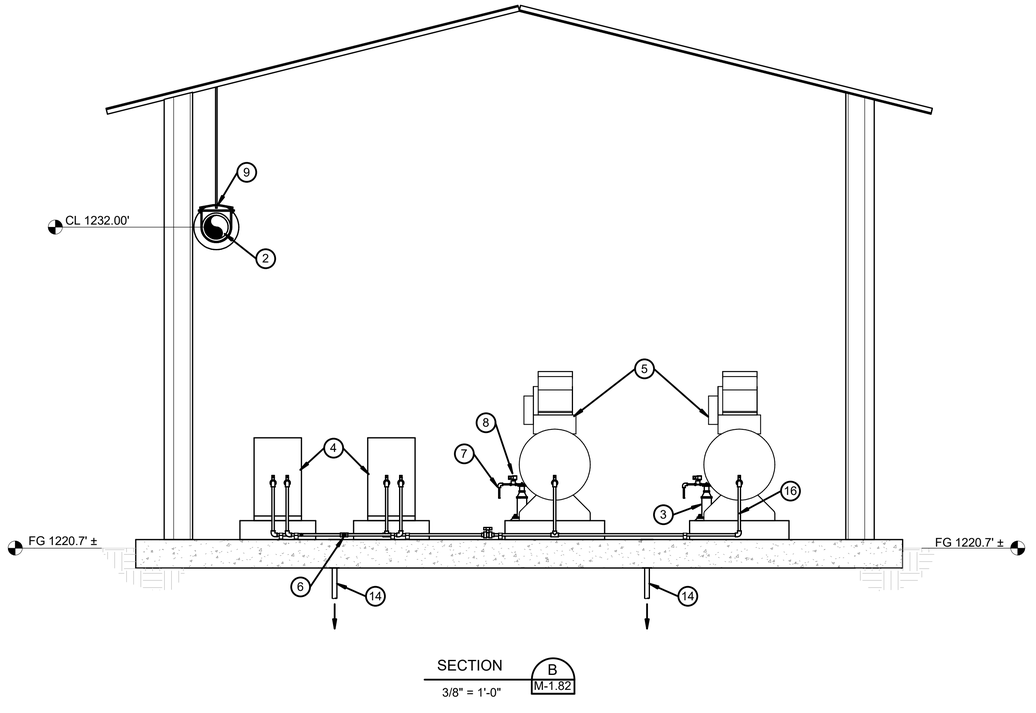

SECTION B
3/8" = 1'-0"
M-1.82

KEYED NOTES

1. POSITIVE DISPLACEMENT BLOWER (TYP)
2. 12" DIA INSULATED SCH 10 SS PROCESS AIR SUPPLY PIPE
3. ADJUSTABLE PIPE SUPPORT (TYP), SEE DETAIL 404 SHEET M-7.04
4. AIR DRYER (TYP)
5. AIR COMPRESSOR (TYP)
6. 1" DIA STAINLESS STEEL COMPRESSED AIR PIPE
7. 1/2" DIA AIR COMPRESSOR DRAIN PIPE (TYP)
8. 1/2" DIA SOLENOID VALVE (TYP)
9. HANGING PIPE SUPPORT (TYP), SEE DETAIL 503 SHEET M-7.05
10. 12" DIA BUTTERFLY VALVE (TYP)
11. 10" X 12" REDUCER
12. POSITIVE DISPLACEMENT BLOWER DISCONNECT SWITCH, SEE ELECTRICAL SHEETS FOR DETAILS
13. RESTRAINED RUBBER EXPANSION JOINT (TYP), SEE DETAIL 301 SHEET M-7.03
14. 2" DIA PVC DRAIN PIPE
15. 6" DIA FIRE PROTECTION MAIN
16. 1" DIA COPPER COMPRESSED AIR PIPE
17. PIPE PENETRATION (TYP), SEE DETAIL 106 SHEET M-7.01

1620 West Fountainhead Pkwy
Suite 501
Tempe, Arizona 85282
Phone: (480) 893-8860

Improving Arizona's Infrastructure Since 1942

WILSON ENGINEERS

CITY OF CHANDLER
RECLAIMED WATER INTERCONNECT FACILITY

RWIF BLOWER BUILDING
SECTION AND DETAILS - 1

CITY PROJECT NO. WW1901.203
WILSON PROJECT NO. 21007

Design: KP	Drawn: JMJ	Checked: SR
Date: 02/2022	Wilson Project No. 21007	

Rev#	Date	Description	By

VERIFY SCALES
BAR IS ONE INCH ON ORIGINAL DRAWING
0 1"
IF NOT ONE INCH ON THIS SHEET, ADJUST SCALES ACCORDINGLY

Registered Professional Engineer
30185
UDAY K. GANDHE
Date signed 02/28/2022
ARIZONA U.S.A.

Registered Professional Engineer
41084
PRAVEEN RAM RENGARAJ
Date signed 02/28/2022
ARIZONA U.S.A.

Sheet No. **M-1.83**

2/25/2022 4:37:45 PM \\phxss01\Data\PROJECT_Revit\05 Chandler Airport WRF\21007\3.0 Blower Building.rvt

AGENCY REVIEW

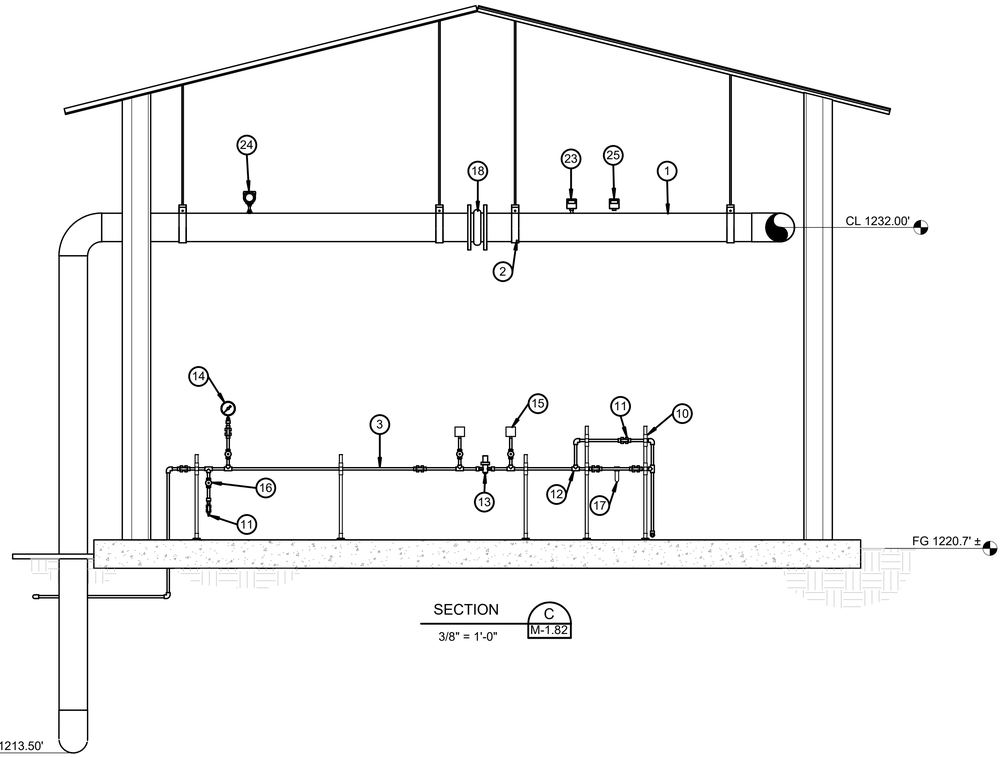

SECTION C
3/8" = 1'-0"
M-1.82

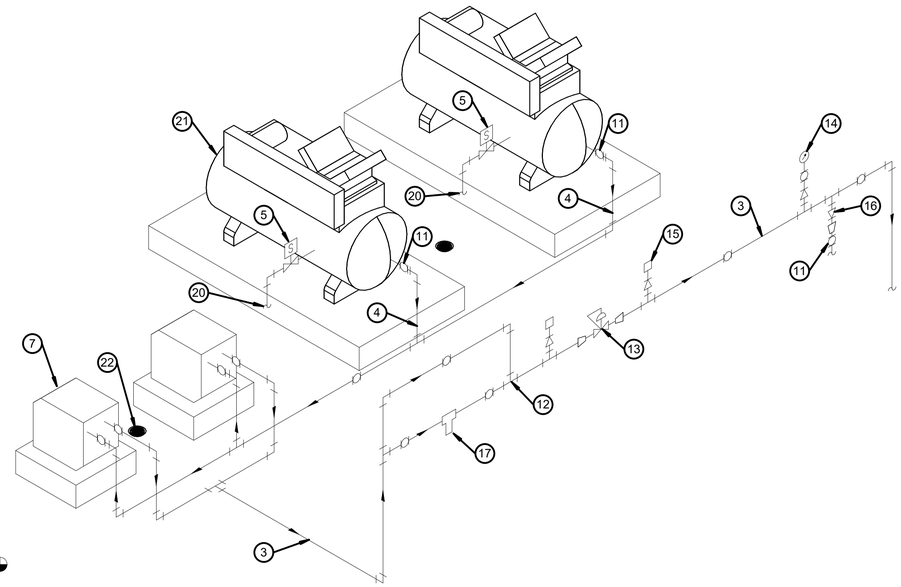

DETAIL A
NOT TO SCALE
M-1.84

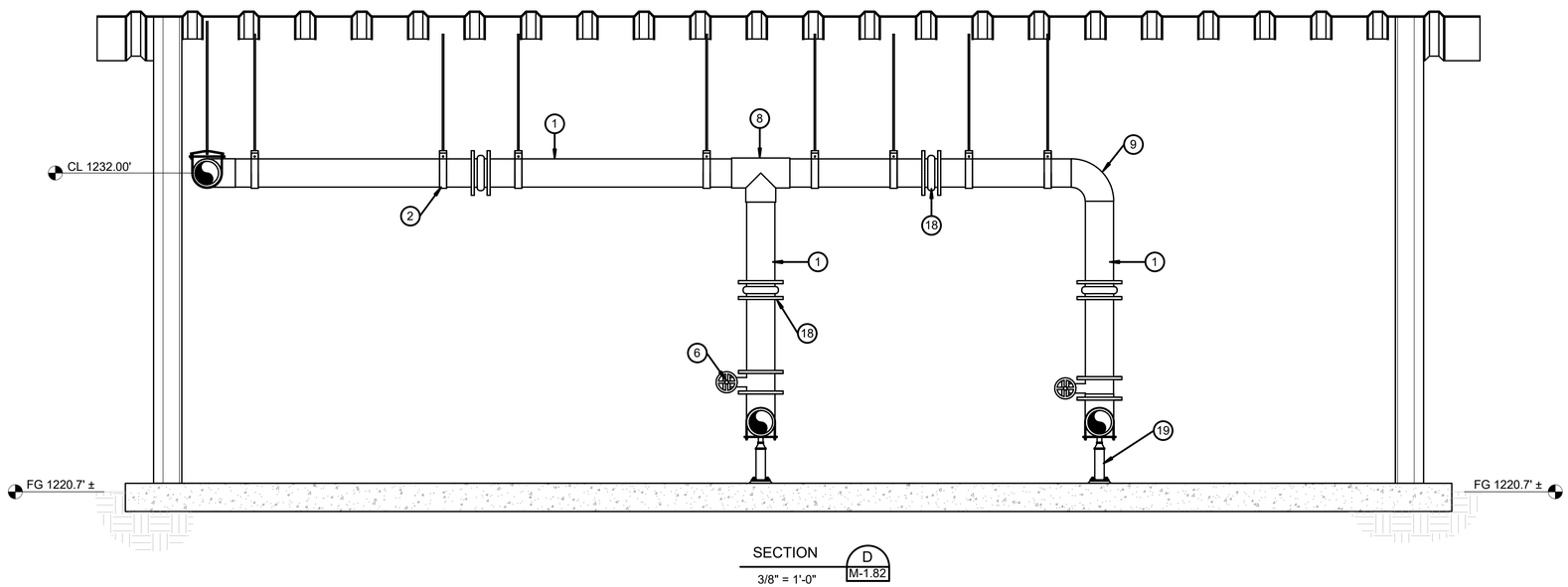

SECTION D
3/8" = 1'-0"
M-1.82

KEYED NOTES

1. 12" DIA INSULATED SCH 10 SS PROCESS AIR SUPPLY PIPE
2. HANGING PIPE SUPPORT (TYP), SEE DETAIL 503 SHEET M-7.05
3. 1" DIA STAINLESS STEEL COMPRESSED AIR PIPE
4. 1" DIA COPPER COMPRESSED AIR PIPE
5. 1/2" DIA AIR SOLENOID VALVE (TYP)
6. 12" DIA BUTTERFLY VALVE (TYP)
7. AIR DRYER (TYP)
8. 12" x 12" x 12" TEE
9. 12" DIA 90 DEGREE BEND (TYP)
10. PIPE SUPPORT (TYP) SEE DETAIL 405 SHEET M-7.04
11. 1" DIA BALL VALVE (TYP)
12. 1" x 1" TEE (TYP)
13. 1" DIA AIR PRESSURE REGULATOR
14. PRESSURE GAUGE, SEE DETAIL 406 SHEET M-7.04
15. 1" DIA PRESSURE GAUGE AND SWITCH (TYP), SEE DETAIL 302 SHEET M-7.03
16. 1" DIA CHECK VALVE
17. COALESCING FILTER
18. RESTRAINED RUBBER EXPANSION JOINT (TYP), SEE DETAIL 301 SHEET M-7.03
19. ADUSTABLE PIPE SUPPORT (TYP), SEE DETAIL 404 SHEET M-7.04. PIPE SUPPORTS ADDED TO SECTION FOR CLARITY
20. AIR COMPRESSOR DRAIN PIPE (TYP)
21. AIR COMPRESSOR (TYP)
22. FLOOR DRAIN (TYP), SEE DETAIL 704 SHEET M-7.07
23. PRESSURE INDICATOR TRANSMITTER
24. THERMAL MASS FLOW METER
25. FLOW SWITCH, SEE ELECTRICAL SHEETS FOR DETAILS

1620 West Fountainhead Pkwy
Suite 501
Tempe, Arizona 85282
Phone: (480) 893-8860

Improving Arizona's Infrastructure Since 1942

WILSON ENGINEERS

CITY OF CHANDLER
RECLAIMED WATER INTERCONNECT FACILITY

RWIF BLOWER BUILDING
SECTION AND DETAILS - 2

CITY PROJECT NO. WW1901203
WILSON PROJECT NO. 21007

Design: KP	Drawn: JMJ	Checked: SR
Date: 02/2022	Wilson Project No. 21007	

Rev#	Date	Description	By

VERIFY SCALES
BAR IS ONE INCH ON ORIGINAL DRAWING
0 1"
IF NOT ONE INCH ON THIS SHEET, ADJUST SCALES ACCORDINGLY

Registered Professional Engineer
CERTIFICATE NO.
30185
UDAY K. GANDHE
Date Signed 02/28/2022
ARIZONA U. S. A.

Registered Professional Engineer
CERTIFICATE NO.
41086
PRAKAM RENGHAJ
Date Signed 02/28/2022
ARIZONA U. S. A.

Sheet No. M-1.84

AGENCY REVIEW

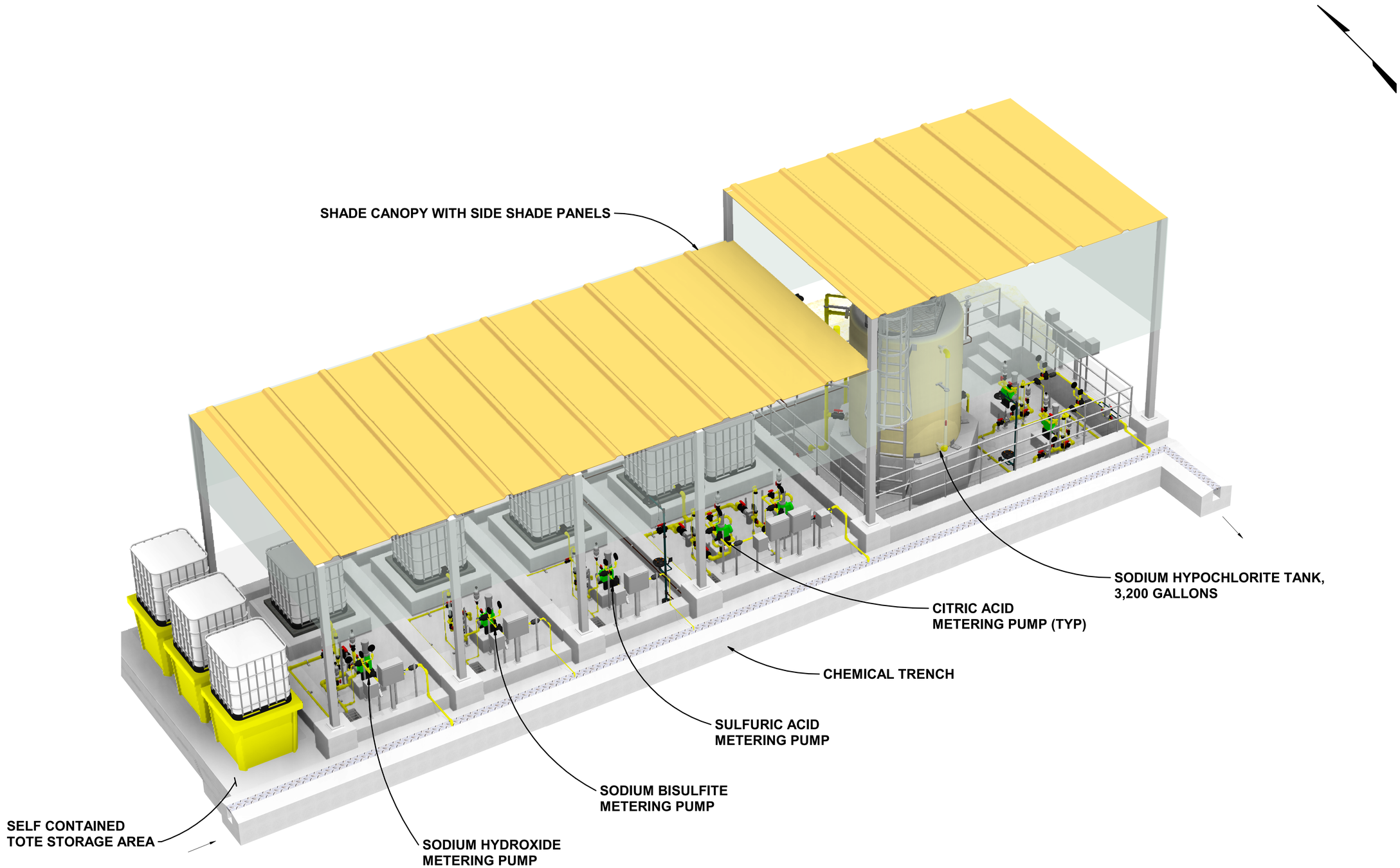

NOTE:

1. CHEMICAL STORAGE TOTES SHOWN FOR ILLUSTRATION PURPOSES ONLY. CHEMICAL STORAGE TOTES ARE NOT INCLUDED IN CONTRACT DESIGN AGREEMENT.

WILSON ENGINEERS
1620 West Fountainhead Pkwy
Suite 501
Tempe, Arizona 85282
Phone: (480) 893-8860
Improving Arizona's Infrastructure Since 1942

CITY OF CHANDLER
RECLAIMED WATER INTERCONNECT FACILITY

MFS CHEMICAL FACILITY RENDERING - 1

CITY PROJECT NO. WW1901.203
WILSON PROJECT NO. 21007

Design: KP	Drawn: JMJ	Checked: SR
Date: 02/2022	Wilson Project No. 21007	

Rev#	Date	Description	By

VERIFY SCALES
BAR IS ONE INCH ON ORIGINAL DRAWING
0 1"
IF NOT ONE INCH ON THIS SHEET, ADJUST SCALES ACCORDINGLY

Registered Professional Engineer (Civil)
CERTIFICATE NO. 30185
UDAY K. GANDHE
Date Signed 02/28/2022
ARIZONA U.S.A.

Registered Professional Engineer (Civil)
CERTIFICATE NO. 41008
SREERAM KENGARAJ
Date Signed 02/28/2022
ARIZONA U.S.A.

Sheet No. M-2.00

2/25/2022 4:32:55 PM \\phxss01\Data\PROJECT_Revit\05 Chandler Airport WRF\21007\2.0 MFS Chemical Facility.rvt
AGENCY REVIEW

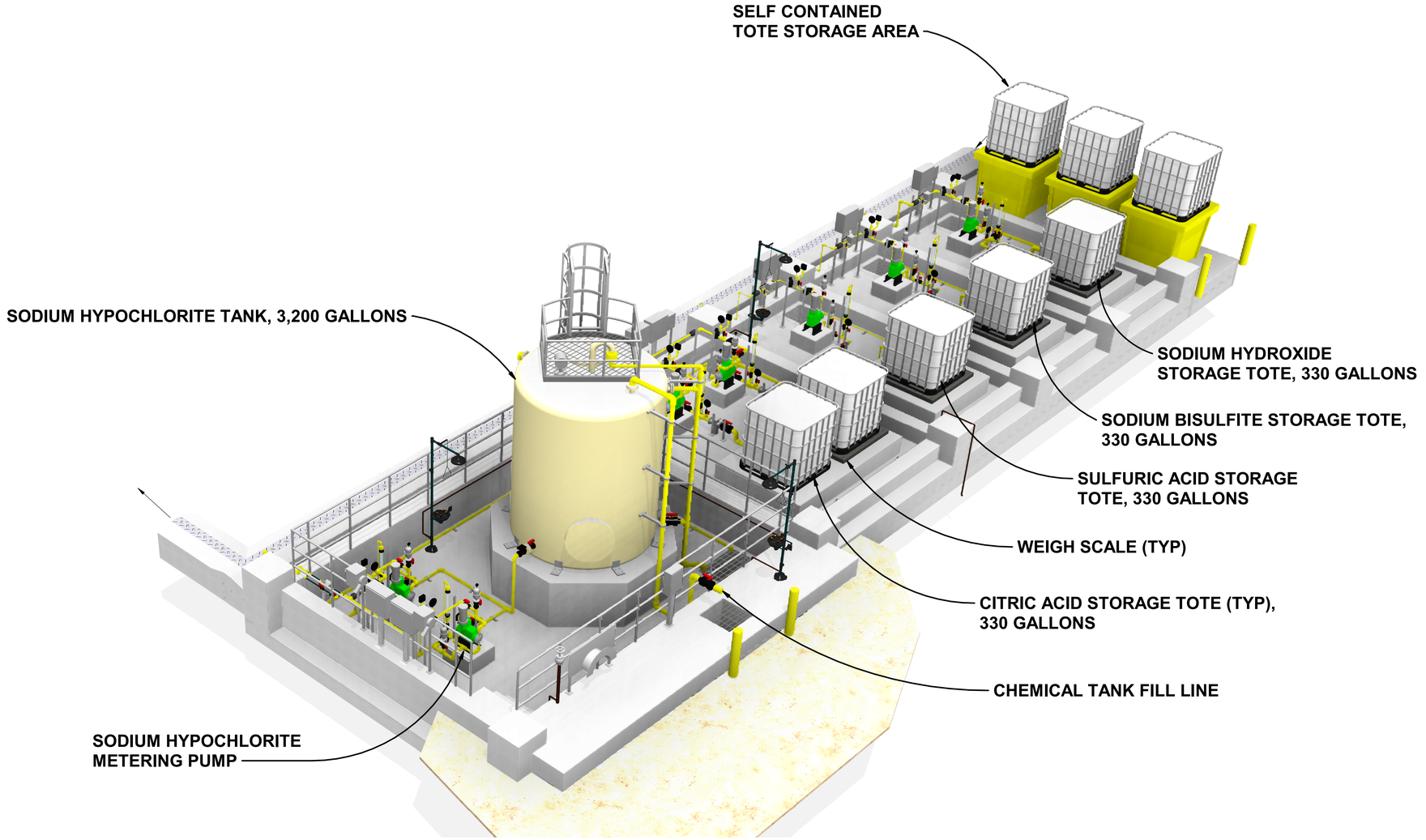

NOTES:

1. SHADE CANOPY NOT SHOWN FOR CLARITY.
2. CHEMICAL STORAGE TOTES SHOWN FOR ILLUSTRATION PURPOSES ONLY. CHEMICAL STORAGE TOTES ARE NOT INCLUDED IN CONTRACT DESIGN AGREEMENT.

1620 West Fountainhead Pkwy
Suite 501
Tempe, Arizona 85282
Phone: (480) 893-8860

Improving Arizona's
Infrastructure Since 1942

WILSON ENGINEERS

CITY OF CHANDLER
RECLAIMED WATER INTERCONNECT FACILITY

MFS CHEMICAL FACILITY
RENDERING - 2

CITY PROJECT NO. WW1901.203
WILSON PROJECT NO. 21007

Design: **KP** Date: **02/2022**
Drawn: **JMJ** Wilson Project No. **21007**
Checked: **SR**

Rev#	Date	Description	By

VERIFY SCALES
BAR IS ONE INCH ON ORIGINAL DRAWING
0 1"
IF NOT ONE INCH ON THIS SHEET, ADJUST SCALES ACCORDINGLY

Registered Professional Engineer (Civil)
30185
UDAY K. GANDHE
Date signed 02/28/2022
ARIZONA U.S.A.

Registered Professional Engineer (Civil)
CERTIFICATE NO.
41086
PRAKASH RENGARAJ
Date signed 02/28/2022
ARIZONA U.S.A.

Sheet No. **M-2.01**

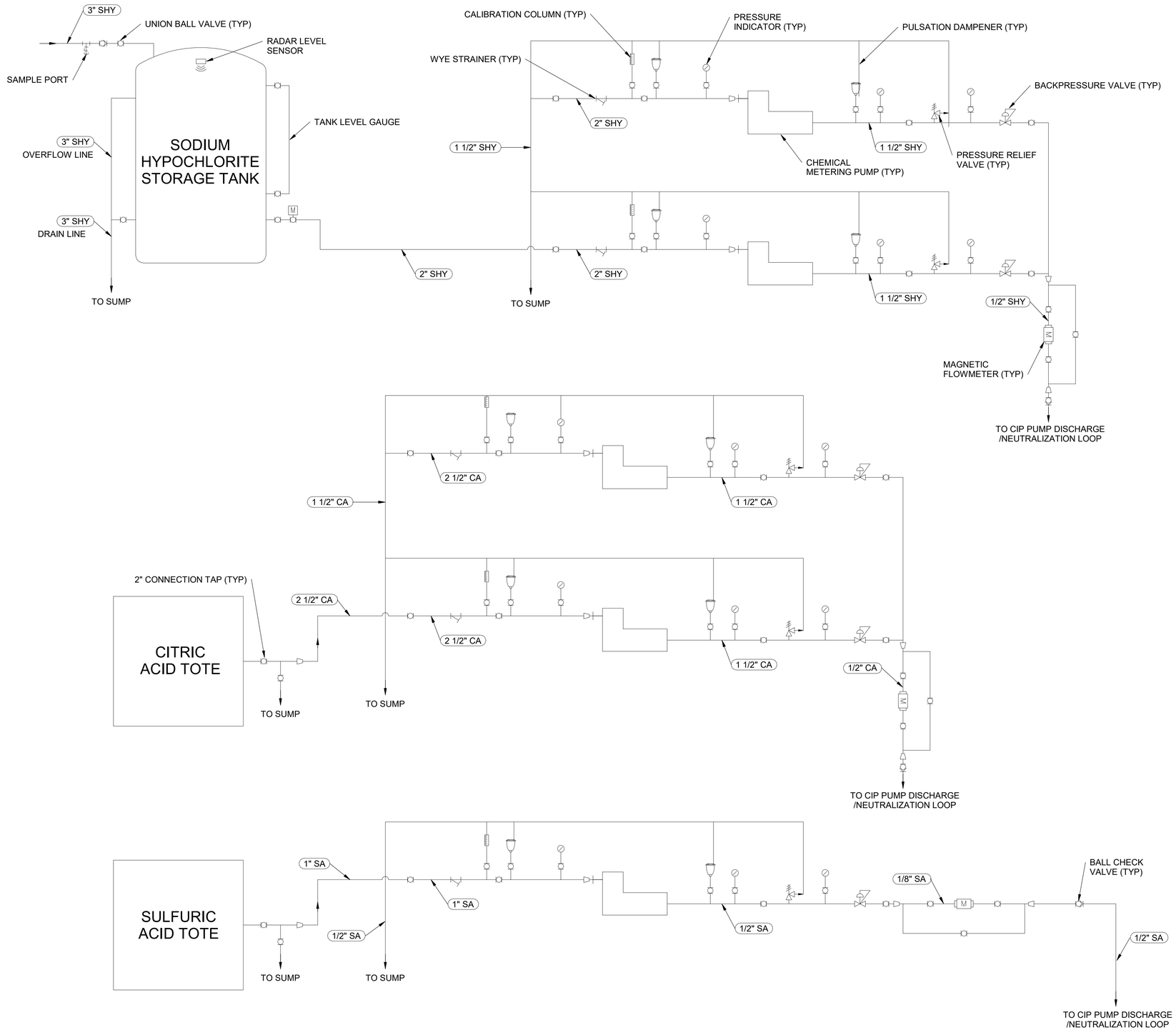

NOTES:

1. CONTRACTOR TO REFER TO DIAPHRAGM METERING PUMP MANUFACTURER FOR PULSATION DAMPENER INSTALLATION DISTANCE FROM PUMP SUCTION AND DISCHARGE.
2. CONTRACTOR TO REFER TO DIAPHRAGM METERING PUMP MANUFACTURER FOR CHANGES IN PIPE DIAMETER IN RESPECT TO DISTANCE FROM PUMP SUCTION AND DISCHARGE.
3. CHEMICAL STORAGE TOTES SHOWN FOR ILLUSTRATION PURPOSES ONLY. CHEMICAL STORAGE TOTES ARE NOT INCLUDED IN CONTRACT DESIGN AGREEMENT.

1620 West Fountainhead Pkwy
Suite 501
Tempe, Arizona 85282
Phone: (480) 893-8860

Improving Arizona's Infrastructure Since 1942

WILSON ENGINEERS

CITY OF CHANDLER
RECLAIMED WATER INTERCONNECT FACILITY

MFS - CHEMICAL FACILITY FLOW SCHEMATIC - 1

CITY PROJECT NO.WW1901.203
WILSON PROJECT NO.

Design: **Designer** Drawn: **Author** Checked: **Checker**
Date: **02/2022** Wilson Project No.

Rev#	Date	Description	By

VERIFY SCALES
BAR IS ONE INCH ON ORIGINAL DRAWING
0 1"
IF NOT ONE INCH ON THIS SHEET, ADJUST SCALES ACCORDINGLY

Professional Engineer Certification
30185
UDAY K. GANDHE
Date Signed 02/28/2022
ARIZONA U.S.A.

Professional Engineer Certificate
41080
PRAM PRENGINKAJ
Date Signed 02/28/2022
ARIZONA U.S.A.

Sheet No. **M-2.02**

AGENCY REVIEW

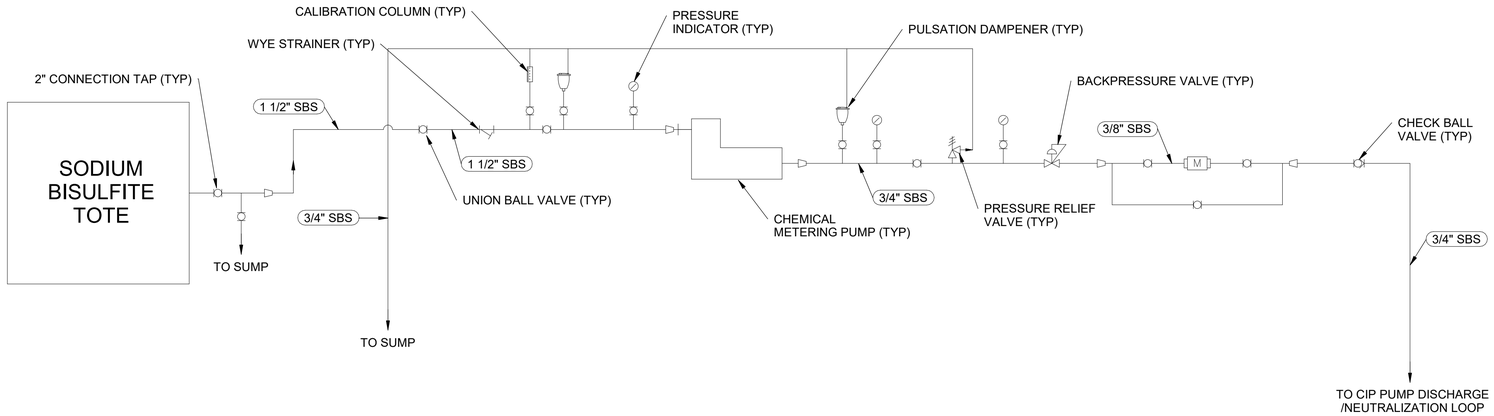

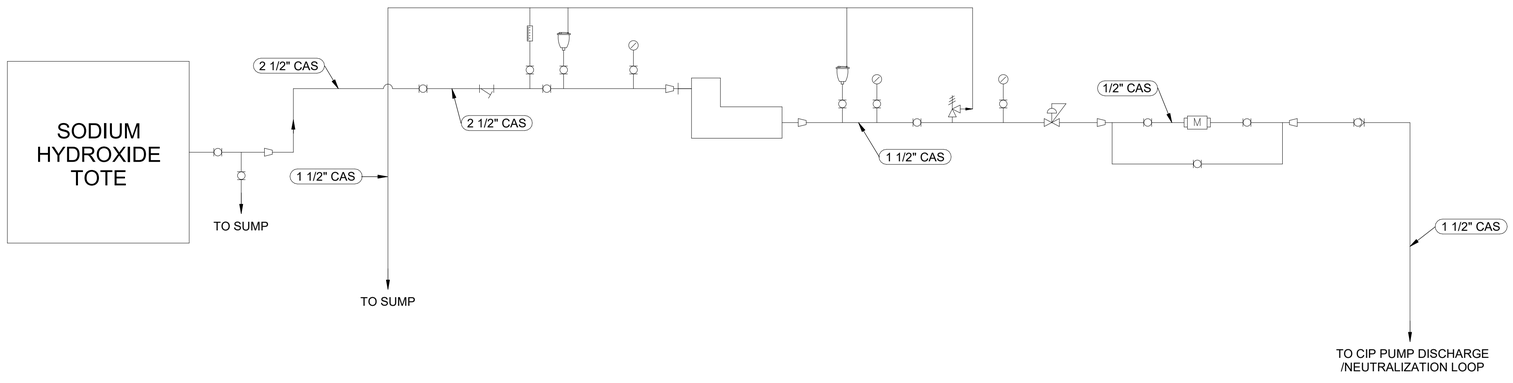

NOTES:

1. CONTRACTOR TO REFER TO DIAPHRAGM METERING PUMP MANUFACTURER FOR PULSATION DAMPENER INSTALLATION DISTANCE FROM PUMP SUCTION AND DISCHARGE.
2. CONTRACTOR TO REFER TO DIAPHRAGM METERING PUMP MANUFACTURER FOR CHANGES IN PIPE DIAMETER IN RESPECT TO DISTANCE FROM PUMP SUCTION AND DISCHARGE.
3. CHEMICAL STORAGE TOTES SHOWN FOR ILLUSTRATION PURPOSES ONLY. CHEMICAL STORAGE TOTES ARE NOT INCLUDED IN CONTRACT DESIGN AGREEMENT.

WILSON ENGINEERS
1620 West Fountainhead Pkwy
Suite 501
Tempe, Arizona 85282
Phone: (480) 893-8860
Improving Arizona's Infrastructure Since 1942

CITY OF CHANDLER
RECLAIMED WATER INTERCONNECT FACILITY

MFS - CHEMICAL FACILITY FLOW SCHEMATIC - 2

CITY PROJECT NO. WW1901.203
WILSON PROJECT NO. 21007

Design: HA	Drawn: KLC	Checked: SR
Date: 02/2022	Wilson Project No. 21007	

Rev#	Date	Description	By

VERIFY SCALES
BAR IS ONE INCH ON ORIGINAL DRAWING
0 1"
IF NOT ONE INCH ON THIS SHEET, ADJUST SCALES ACCORDINGLY

Registered Professional Engineer (Civil) CERTIFICATE NO. 30185 UDAY K. GANDHE Date Signed 02/28/2022 ARIZONA U.S.A.

Registered Professional Engineer (Civil) CERTIFICATE NO. 41008 SREERAM RENGARAJ Date Signed 02/28/2022 ARIZONA U.S.A.

Sheet No. **M-2.03**

2/28/2022 4:02:35 PM G:\PROJECT_Revit\05 Chandler Airport WRF\21007\2.0 MFS Chemical Facility.rvt

AGENCY REVIEW

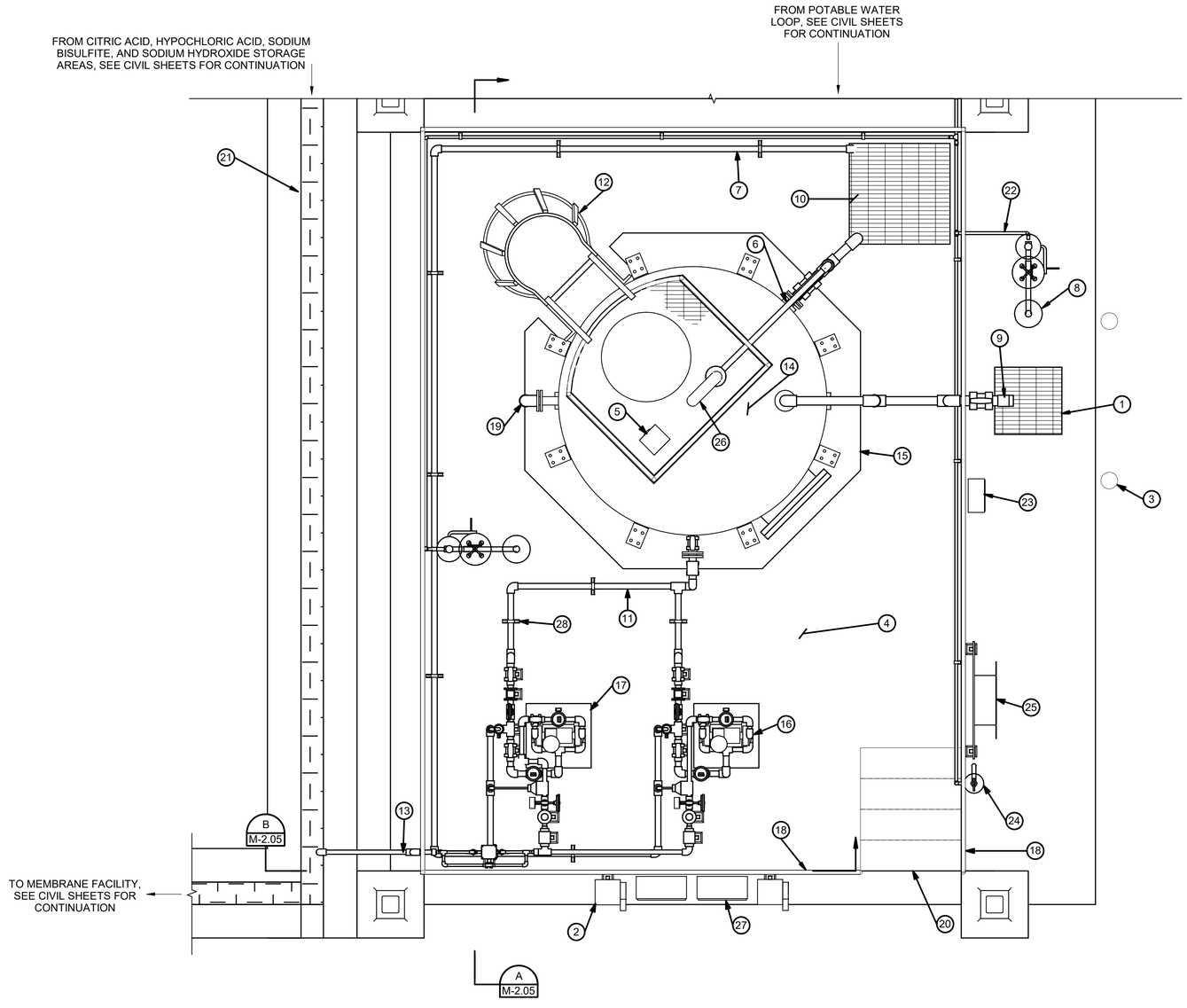

SODIUM HYPOCHLORITE FACILITY PLAN

1/2" = 1'-0"

NOTE:

1. SHADE CANOPY AND SIDE SHADE PANELS NOT SHOWN FOR CLARITY, SEE STRUCTURAL SHEETS FOR CANOPY DETAILS.

KEYED NOTES

1. CHEMICAL TANK FILL LINE SUMP WITH FRP GRATING, SEE STRUCTURAL SHEETS FOR DETAILS
2. SODIUM HYPOCHLORITE DIAPHRAGM METERING PUMP DISCONNECT SWITCH, SEE ELECTRICAL SHEETS FOR DETAILS (TYP)
3. BOLLARD (TYP), SEE CIVIL SHEETS FOR DETAILS
4. SODIUM HYPOCHLORITE STORAGE CONTAINMENT AREA
5. RADAR LEVEL SENSOR, SEE ELECTRICAL SHEETS FOR DETAILS
6. 3" DIA CPVC TANK OVERFLOW LINE
7. 1 1/2" DIA CPVC SODIUM HYPOCHLORITE PUMP DRAIN LINE
8. EMERGENCY EYEWASH/SHOWER STATION (TYP), SEE DETAIL 601 SHEET M-7.06
9. 3" DIA TANK FILL LINE WITH DRY DISCONNECT ADAPTORS AND SAMPLE TAP
10. CONTAINMENT AREA SUMP WITH FRP GRATING, SEE STRUCTURAL SHEETS FOR DETAILS
11. 2" DIA CPVC SODIUM HYPOCHLORITE FEED LINE TO DIAPHRAGM METERING PUMPS. PROVIDE 0.5 PERCENT DOWNWARD SLOPE FROM ELEVATION SHOWN AT TANK TO THE DIAPHRAGM METERING PUMPS
12. FRP ACCESS LADDER
13. 1 1/2" DIA CPVC SODIUM HYPOCHLORITE PUMP DISCHARGE LINE
14. 3,200 GALLON FRP TANK (8'-0" DIA)
15. FRP TANK CONCRETE PAD, SEE STRUCTURAL SHEETS FOR DETAILS
16. SODIUM HYPOCHLORITE DIAPHRAGM METERING PUMP (TYP)
17. EQUIPMENT PAD, SEE STRUCTURAL SHEETS FOR DETAILS
18. ALUMINUM GUARDRAIL, SEE DETAIL 701 SHEET M-7.07
19. TANK LEVEL GAUGE
20. CONCRETE STAIRS, SEE STRUCTURAL SHEETS FOR DETAILS
21. CHEMICAL TRENCH, SEE CIVIL SHEETS FOR DETAILS
22. 2" DIA COPPER POTABLE WATER PIPE
23. UNLOADING AREA LOCAL CONTROL PANEL, SEE ELECTRICAL SHEETS FOR DETAILS
24. YARD HYDRANT (TYP), SEE CIVIL SHEETS FOR DETAILS
25. HOSE RACK (TYP), SEE CIVIL SHEETS FOR DETAILS
26. 4" DIA TANK AIR VENT, SEE DETAIL 204 SHEET M-7.02
27. SODIUM HYPOCHLORITE DIAPHRAGM METERING PUMP LOCAL CONTROL PANEL, SEE ELECTRICAL SHEETS FOR DETAILS (TYP)
28. FLOOR PIPE SUPPORT (TYP), SEE DETAIL 702 SHEET M-7.07

1620 West Fountainhead Pkwy
Suite 501
Tempe, Arizona 85282
Phone: (480) 893-8860

Improving Arizona's Infrastructure Since 1942

WILSON ENGINEERS

CITY OF CHANDLER
RECLAIMED WATER INTERCONNECT FACILITY

MFS - SODIUM HYPOCHLORITE FACILITY OVERALL PLAN

CITY PROJECT NO. WW1901.203
WILSON PROJECT NO. 21007

Design: KP	Drawn: JMJ	Checked: SR
Date: 02/2022	Wilson Project No. 21007	

Rev#	Date	Description	By

VERIFY SCALES

BAR IS ONE INCH ON ORIGINAL DRAWING

0 1"

IF NOT ONE INCH ON THIS SHEET, ADJUST SCALES ACCORDINGLY

Registered Professional Engineer (Civil)
CERTIFICATE NO. 30185
UDAY K. GANDHE
Date Signed 02/28/2022
ARIZONA U.S.A.

Registered Professional Engineer (Civil)
CERTIFICATE NO. 41008
SREERAM RENGARAJ
Date Signed 02/28/2022
ARIZONA U.S.A.

Sheet No. **M-2.04**

2/25/2022 4:33:14 PM \\phxss01\Data\PROJECT_Revit\05 Chandler Airport WRF\21007\2.0 MFS Chemical Facility.rvt

AGENCY REVIEW

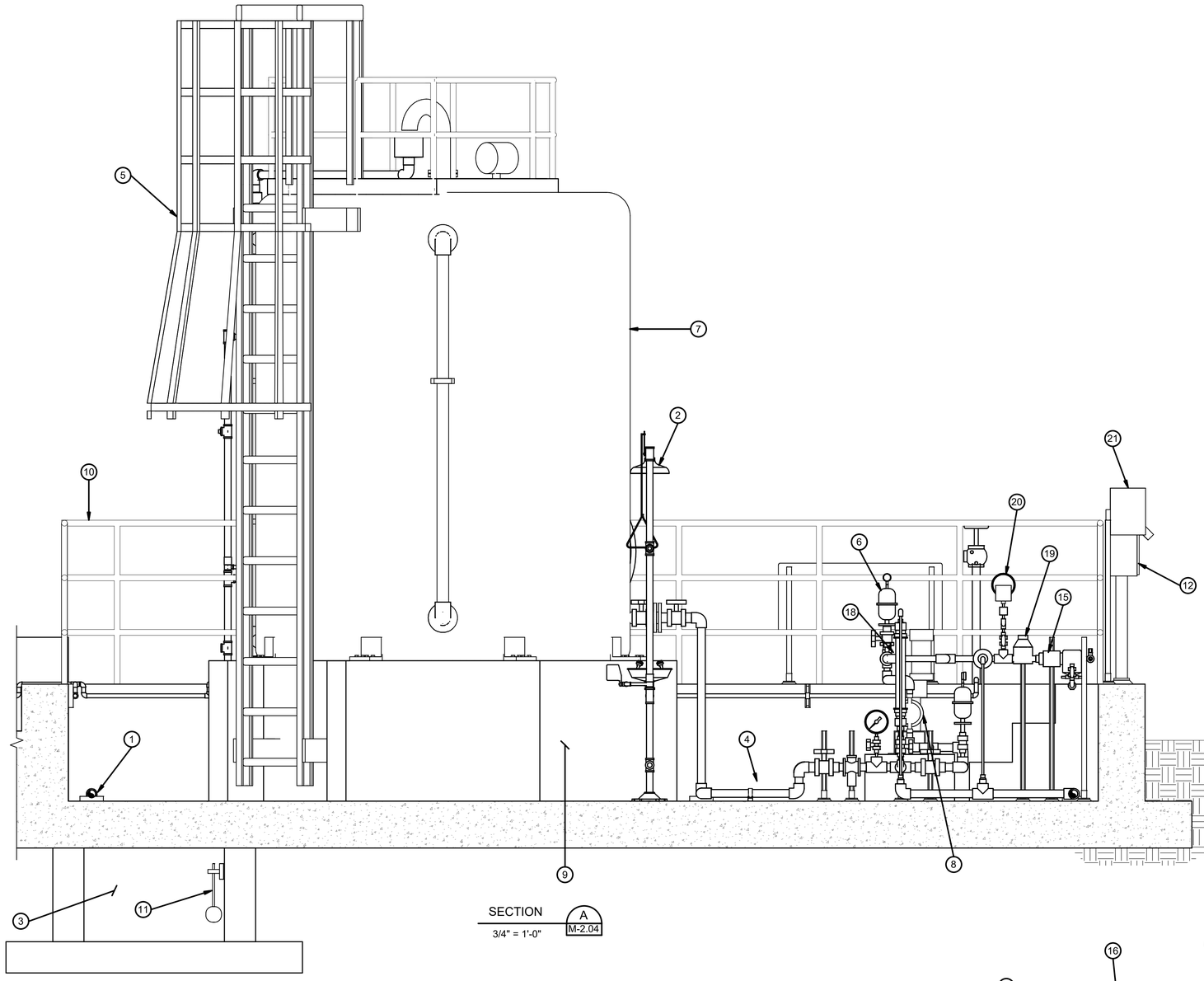

SECTION A M-2.04
3/4" = 1'-0"

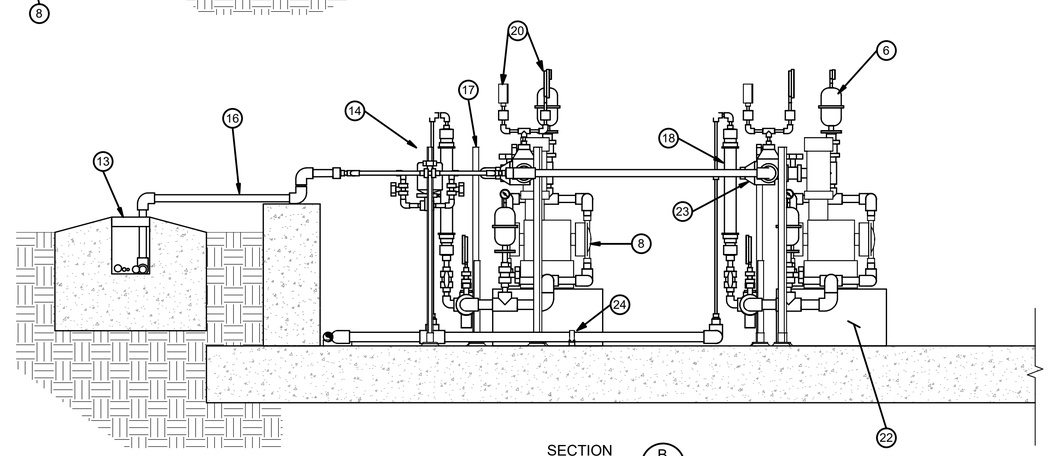

SECTION B M-2.04
3/4" = 1'-0"

KEYED NOTES

1. 1 1/2" DIA CPVC SODIUM HYPOCHLORITE PUMP DRAIN LINE
2. EMERGENCY EYEWASH/SHOWER STATION (TYP), SEE DETAIL 601 SHEET M-7.06
3. CONTAINMENT AREA SUMP WITH FRP GRATING, SEE STRUCTURAL SHEETS FOR DETAIL
4. 2" DIA CPVC SODIUM HYPOCHLORITE FEED LINE TO DIAPHRAGM METERING PUMPS. PROVIDE 0.5 PERCENT DOWNWARD SLOPE FROM ELEVATIONS SHOWN AT TANK TO THE DIAPHRAGM METERING PUMPS
5. ACCESS LADDER WITH CAGE
6. PULSATION DAMPENER (TYP)
7. 3,200 GALLON FRP TANK (8'-0" DIA)
8. SODIUM HYPOCHLORITE DIAPHRAGM METERING PUMP (TYP)
9. FRP TANK CONCRETE PAD, SEE STRUCTURAL SHEETS FOR DETAILS
10. ALUMINUM GUARDRAIL, SEE DETAIL 701 SHEET M-7.07
11. FLOAT SWITCH (TYP), SEE ELECTRICAL SHEETS FOR DETAILS
12. SODIUM HYPOCHLORITE DIAPHRAGM METERING PUMP LOCAL CONTROL PANEL, SEE ELECTRICAL SHEETS FOR DETAILS
13. CHEMICAL TRENCH, SEE CIVIL SHEETS FOR DETAILS
14. 1/2" DIA MAGNETIC FLOW METER
15. 1 1/2" DIA CHECK VALVE (TYP)
16. 1 1/2" DIA CPVC SODIUM HYPOCHLORITE PUMP DISCHARGE LINE
17. PIPE SUPPORT (TYP), SEE DETAIL 506 SHEET M-7.05
18. CALIBRATION COLUMN (TYP)
19. PRESSURE REGULATING VALVE (TYP)
20. PRESSURE GAUGE AND SWITCH ASSEMBLY (TYP), SEE DETAIL 302 SHEET M-7.03
21. SODIUM HYPOCHLORITE DIAPHRAGM METERING PUMP DISCONNECT SWITCH, SEE ELECTRICAL SHEETS FOR DETAILS
22. EQUIPMENT PAD, SEE STRUCTURAL SHEETS FOR DETAILS
23. PRESSURE RELIEF VALVE (TYP)
24. FLOOR PIPE SUPPORT (TYP), SEE DETAIL 702 SHEET M-7.07

NOTE:

1. SHADE CANOPY AND SIDE SHADE PANELS NOT SHOWN FOR CLARITY, SEE STRUCTURAL SHEETS FOR CANOPY DETAILS.

1620 West Fountainhead Pkwy
Suite 501
Tempe, Arizona 85282
Phone: (480) 893-8860

Improving Arizona's Infrastructure Since 1942

WILSON ENGINEERS

CITY OF CHANDLER
RECLAIMED WATER INTERCONNECT FACILITY

MFS - SODIUM HYPOCHLORITE FACILITY SECTION AND DETAILS

CITY PROJECT NO. WW1901.203
WILSON PROJECT NO. 21007

Design: KP	Drawn: JMJ	Checked: SR
Date: 02/2022	Wilson Project No. 21007	

Rev#	Date	Description	By

VERIFY SCALES
BAR IS ONE INCH ON ORIGINAL DRAWING
0 1"
IF NOT ONE INCH ON THIS SHEET, ADJUST SCALES ACCORDINGLY

Registered Professional Engineer (Civil) CERTIFICATE NO. 30185 UDAY K. GANDHE Date Signed 02/28/2022 ARIZONA U. S. A.

Registered Professional Engineer (Civil) CERTIFICATE NO. 41008 SREERAM RENGARAJ Date Signed 02/28/2022 ARIZONA U. S. A.

Sheet No. **M-2.05**

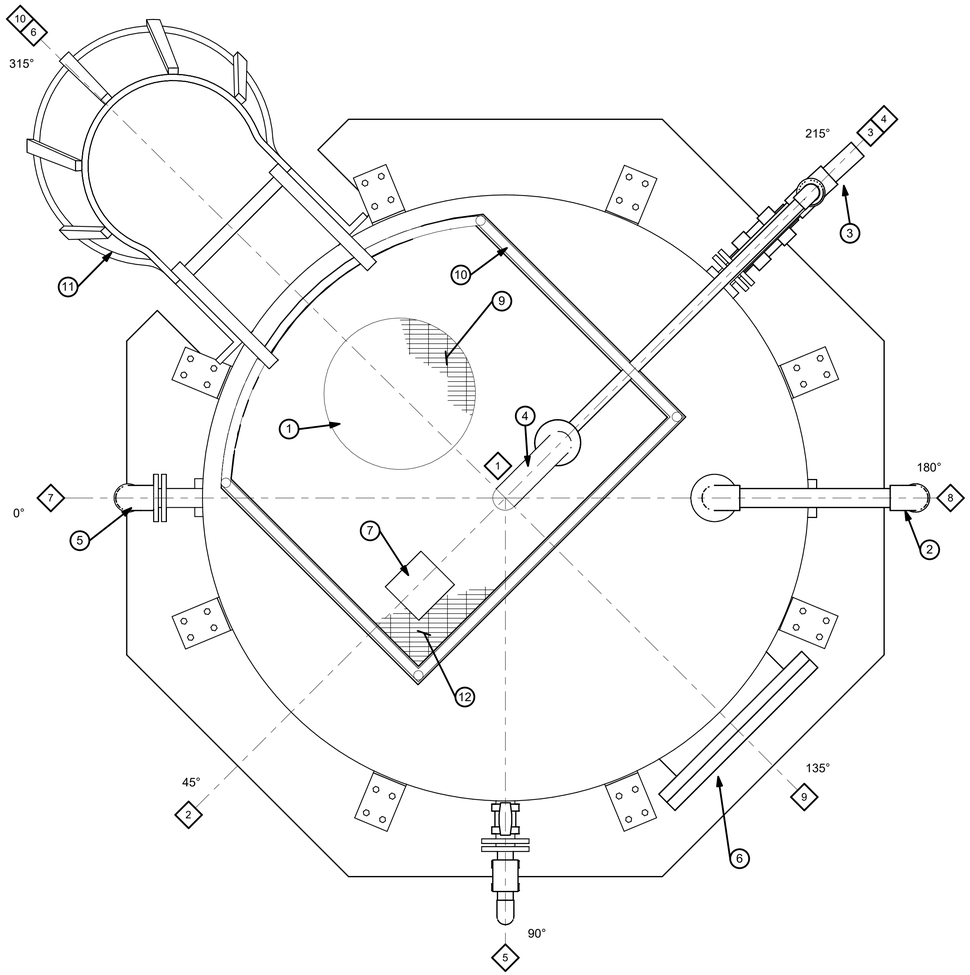

SODIUM HYPOCHLORITE TANK TOP ORIENTATION DIAGRAM

DETAIL A M-2.06
1" = 1'-0"

SODIUM HYPOCHLORITE TANK			
DESCRIPTION	POSITION	SIZE (DIA)	CL EL*
VENT	1	4"	-
LEVEL SENSOR	2	3"	-
OVERFLOW OUTLET	3	3"	6'-0"
TANK DRAIN	4	3"	6"
FEED LINE	5	2"	6"
ROOF MANWAY	6	24"	-
TANK LEVEL GAUGE	7	2"	6'-0"/6"
FILL LINE	8	3"	10'-9"
SIDE MANWAY	9	24"	10"
LADDER	10	-	-

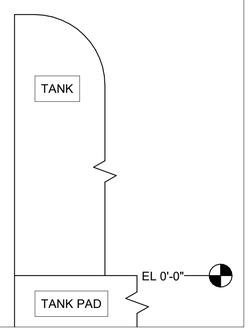

*℄ HEIGHT IS FROM TOP OF TANK PAD

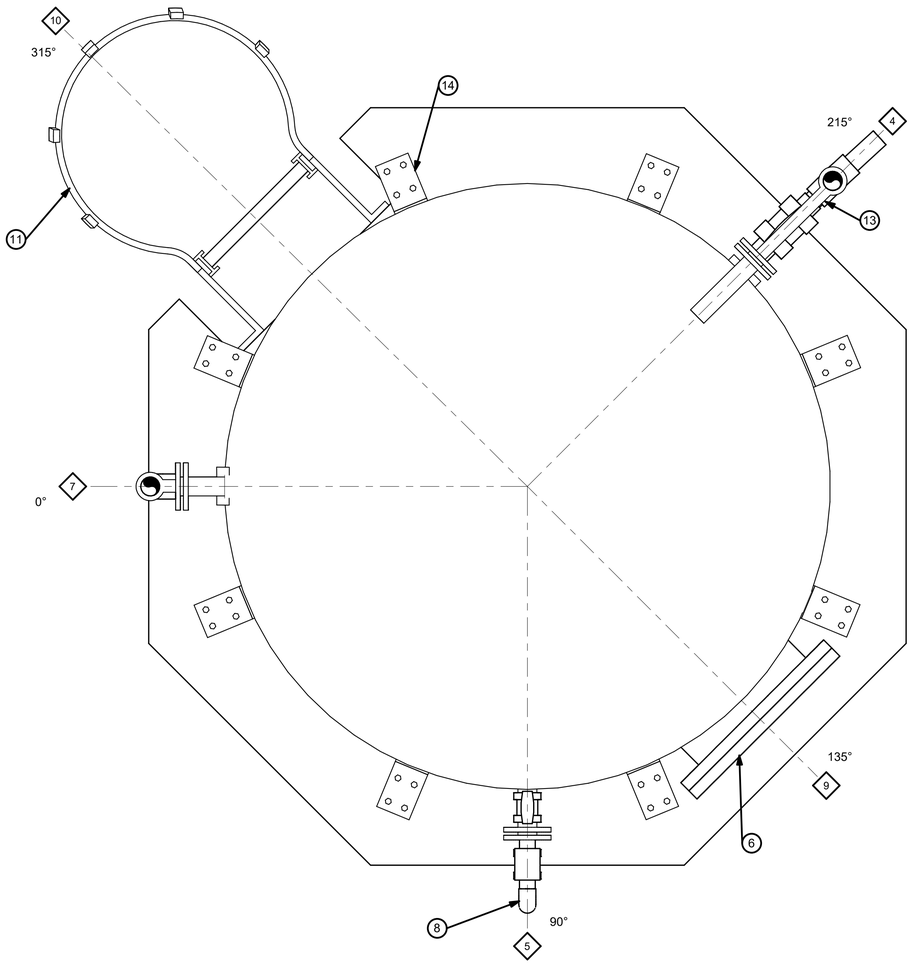

SODIUM HYPOCHLORITE TANK TOP LOWER DIAGRAM

DETAIL B M-2.06
1" = 1'-0"

KEYED NOTES

1. 24" DIA ROOF MANWAY WITH BLIND FLANGE USE 316 SS NUTS AND BOLTS
2. 3" DIA CPVC TANK FILL PORT, SEE DETAIL A SHEET M-2.07
3. 3" DIA PVC OVERFLOW PORT
4. 4" DIA CPVC GOOSENECK TANK VENT, SEE DETAIL 205 SHEET M-7.02
5. 2" DIA CPVC TANK LEVEL GAUGE
6. 24" DIA SIDE MANWAY WITH BLIND FLANGE USE 316 SEE NUTS AND BOLTS
7. 3" DIA CPVC PORT FOR LEVEL SENSOR
8. 2" DIA CPVC SODIUM HYPOCHLORITE SUCTION PORT
9. REMOVABLE FRP GRATING ABOVE 24" DIA MANWAY
10. FRP GUARDRAIL
11. LADDER WITH SAFETY CAGE AS REQUIRED TO MEET OSHA STANDARDS, SEE DETAIL B, SHEET M-2.07
12. FRP GRATING
13. 3" DIA CPVC DRAIN PORT
14. TANK TIE DOWN (TYP), SEE STRUCTURAL SHEETS FOR DETAILS

1620 West Fountainhead Pkwy
Suite 501
Tempe, Arizona 85282
Phone: (480) 893-8860

Improving Arizona's Infrastructure Since 1942

WILSON ENGINEERS

CITY OF CHANDLER
RECLAIMED WATER INTERCONNECT FACILITY

MFS - SODIUM HYPOCHLORITE TANK ORIENTATION PLAN AND DETAILS

CITY PROJECT NO. WW1901.203
WILSON PROJECT NO. 21007

Design: KP | Drawn: JMJ | Checked: SR
Date: 02/2022 | Wilson Project No. 21007

Rev#	Date	Description	By

VERIFY SCALES
BAR IS ONE INCH ON ORIGINAL DRAWING
0 1"
IF NOT ONE INCH ON THIS SHEET, ADJUST SCALES ACCORDINGLY

Registered Professional Engineer (Civil) CERTIFICATE NO. 30185 UDAY K. GANDHE Date Signed 02/28/2022 ARIZONA U. S. A.

Registered Professional Engineer (Civil) CERTIFICATE NO. 41008 SHEERAM RENGARAJ Date Signed 02/28/2022 ARIZONA U. S. A.

Sheet No. M-2.06

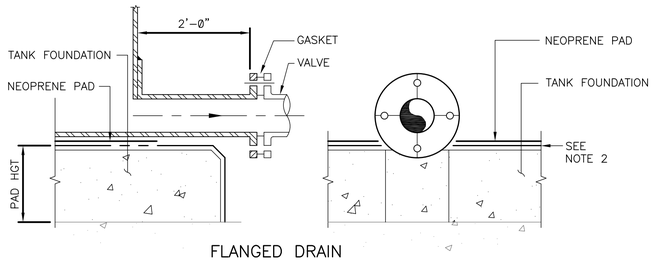

FLANGED DRAIN

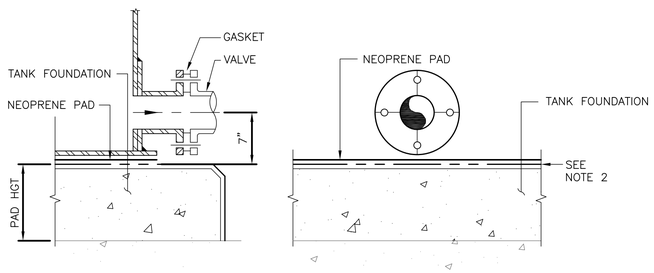

INTEGRALLY FLANGED TRANSFER FEED

NOTE:
1. TANK FOUNDATION AND CONTAINMENT AREA FLOOR TO BE CHEMICAL COATED, SEE SPECIFICATIONS FOR DETAILS.

2. NEOPRENE PAD 1/2" THICK TO BE PLACED UNDERNEATH ENTIRE FRP TANK AND ON TOP OF CONCRETE TANK PAD.

DETAIL	A
NOT TO SCALE	–

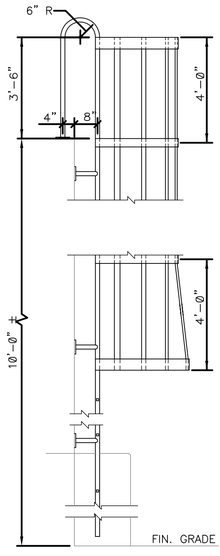

LADDER WITH CAGE ELEVATIONS

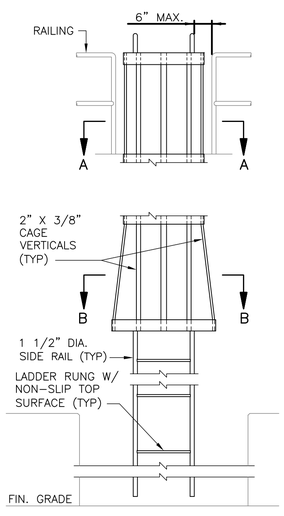

PLANS

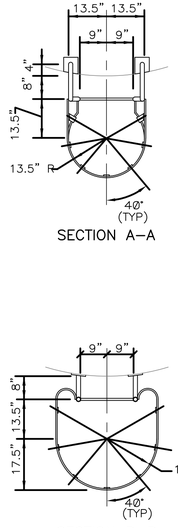

GENERAL LADDER NOTES:

1. PROVIDE SHOP FABRICATED LADDERS PER SPECIFICATIONS.

2. PROVIDE CAGE ON LADDERS AS REQUIRED TO MEET OSHA STANDARDS.

DETAIL	B
NOT TO SCALE	–

WILSON ENGINEERS
1620 West Fountainhead Pkwy
Suite 501
Tempe, Arizona 85282
Phone: (480) 893-8860
Improving Arizona's Infrastructure Since 1942

CITY OF CHANDLER
RECLAIMED WATER INTERCONNECT FACILITY

MFS – SODIUM HYPOCHLORITE TANK DETAILS

CITY PROJECT NO. WW1901.203
WILSON PROJECT NO. 21007

Design: SZ	Drawn: JMJ	Checked: SR
Date: 02/2022	Wilson Project No.: 21007	

Rev#	Date	Description	By
R	02/2022	Review Submittal	

VERIFY SCALES
BAR IS ONE INCH ON ORIGINAL DRAWING
0 1"
IF NOT ONE INCH ON THIS SHEET, ADJUST SCALES ACCORDINGLY





Sheet No. **M–2.07**

AGENCY REVIEW

XREFS: 21007 M149.1; 21007 M149.2; TB-WE-D; SEAL-UKG; SEAL-SR
G:\PROJECT\21007\CADD\DESIGN\MECHANICAL\21007 M-2.07.DWG, 2/25/2022 3:16:10 PM, ckilday, 1:2.19

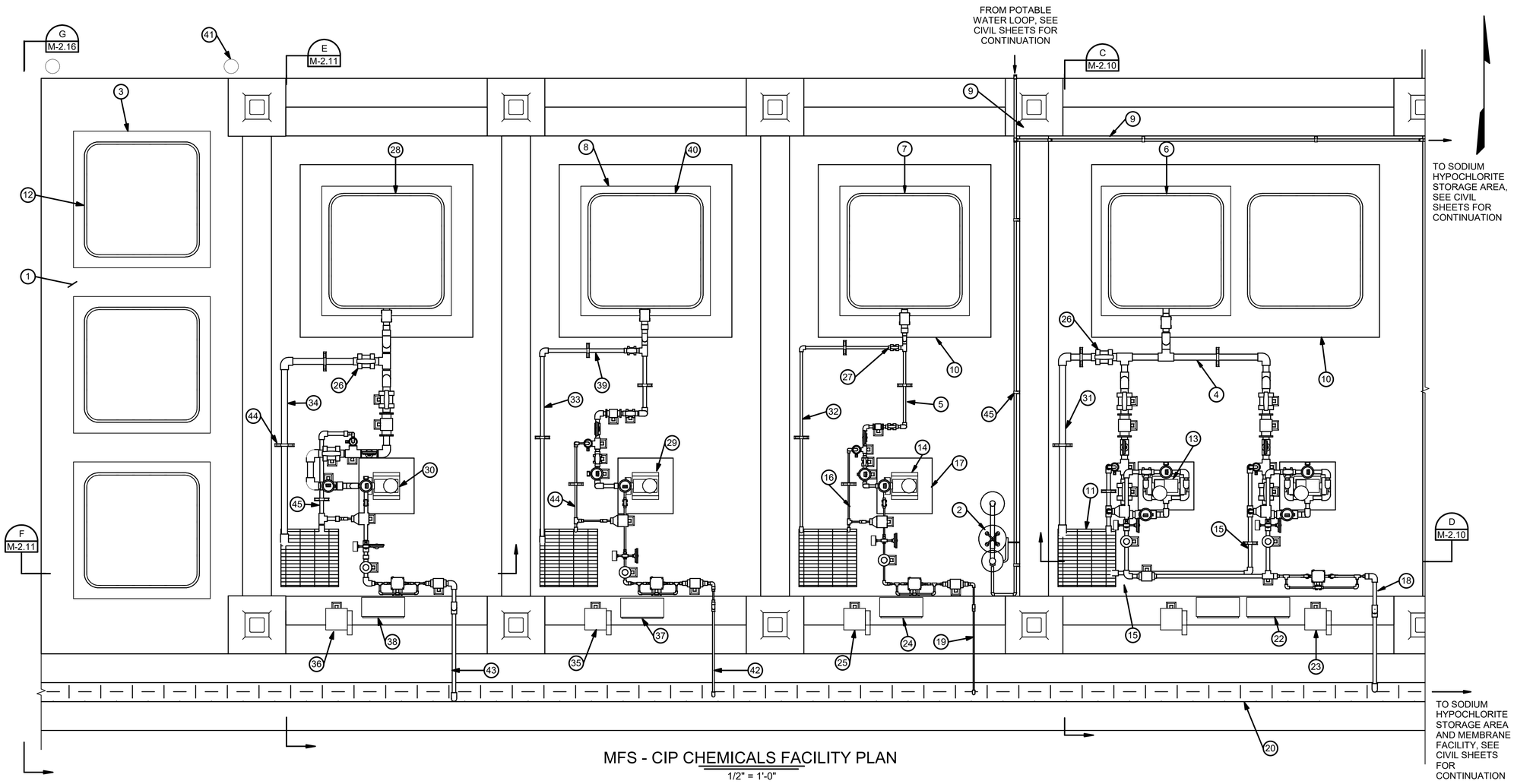

MFS - CIP CHEMICALS FACILITY PLAN

1/2" = 1'-0"

KEYED NOTES

1. SELF CONTAINED TOTE STORAGE AREA
2. EMERGENCY EYEWASH/SHOWER STATION (TYP), SEE DETAIL 601 SHEET M-7.06
3. IBC SPILL PALLET WITH MINIMUM SPILL CAPACITY OF 330 GALLONS, MODEL 5460-YE AS MANUFACTURED BY GRAINGER, OR APPROVED EQUAL
4. 2 1/2" DIA CPVC CITRIC ACID FEED LINE
5. 1" DIA CPVC SULFURIC ACID FEED LINE
6. CITRIC ACID STORAGE TOTE, 330 GALLONS (TYP)
7. SULFURIC ACID STORAGE TOTE, 330 GALLONS
8. TOTE WEIGH SCALE (TYP)
9. 2" DIA COPPER POTABLE WATER PIPE
10. STORAGE TOTE CONCRETE PAD (TYP), SEE STRUCTURAL SHEETS FOR DETAILS
11. CONTAINMENT AREA SUMP WITH FRP GRATING (TYP), SEE STRUCTURAL SHEETS FOR DETAILS
12. SPARE CHEMICAL STORAGE TOTE, 330 GALLONS (TYP)
13. CITRIC ACID DIAPHRAGM METERING PUMP (TYP)
14. SULFURIC ACID DIAPHRAGM METERING PUMP
15. 1 1/2" DIA CPVC CITRIC ACID PUMP DRAIN LINE
16. 1/2" DIA CPVC SULFURIC ACID PUMP DRAIN LINE
17. EQUIPMENT PAD, SEE STRUCTURAL SHEETS FOR DETAILS
18. 1 1/2" DIA CPVC CITRIC ACID PUMP DISCHARGE LINE
19. 1/2" DIA CPVC SULFURIC ACID PUMP DISCHARGE LINE
20. CHEMICAL TRENCH, SEE CIVIL SHEETS FOR DETAILS
21. FUTURE CHEMICAL STORAGE TOTE (TYP)
22. CITRIC ACID DIAPHRAGM METERING PUMP LOCAL CONTROL PANEL (TYP), SEE ELECTRICAL SHEETS FOR DETAILS
23. CITRIC ACID DIAPHRAGM METERING PUMP DISCONNECT SWITCH (TYP), SEE ELECTRICAL SHEETS FOR DETAILS
24. SULFURIC ACID DIAPHRAGM METERING PUMP LOCAL CONTROL PANEL, SEE ELECTRICAL SHEETS FOR DETAILS
25. SULFURIC ACID DIAPHRAGM METERING PUMP DISCONNECT SWITCH, SEE ELECTRICAL SHEETS FOR DETAILS
26. 2 1/2" DIA UNION BALL VALVE (TYP)
27. 1" DIA UNION BALL VALVE (TYP)
28. SODIUM HYDROXIDE STORAGE TOTE, 330 GALLONS
29. SODIUM BISULFITE DIAPHRAGM METERING PUMP
30. SODIUM HYDROXIDE DIAPHRAGM METERING PUMP
31. 2 1/2" DIA CPVC CITRIC ACID STORAGE TOTE DRAIN LINE
32. 1" DIA CPVC SULFURIC ACID STORAGE TOTE DRAIN LINE
33. 1 1/2" DIA CPVC SODIUM BISULFITE STORAGE TOTE DRAIN LINE
34. 2 1/2" DIA CPVC SODIUM HYDROXIDE STORAGE TOTE DRAIN LINE
35. SODIUM BISULFITE DIAPHRAGM METERING PUMP DISCONNECT SWITCH, SEE ELECTRICAL SHEETS FOR DETAILS
36. SODIUM HYDROXIDE DIAPHRAGM METERING PUMP DISCONNECT SWITCH, SEE ELECTRICAL SHEETS FOR DETAILS
37. SODIUM BISULFITE DIAPHRAGM METERING PUMP LOCAL CONTROL PANEL, SEE ELECTRICAL SHEETS FOR DETAILS
38. SODIUM HYDROXIDE DIAPHRAGM METERING PUMP LOCAL CONTROL PANEL, SEE ELECTRICAL SHEETS FOR DETAILS
39. 1 1/2" DIA UNION BALL VALVE
40. SODIUM BISULFITE STORAGE TOTE, 330 GALLONS
41. BOLLARD (TYP), SEE CIVIL SHEETS FOR DETAILS
42. 3/4" DIA CPVC SODIUM BISULFITE PUMP DISCHARGE LINE
43. 1 1/2" DIA CPVC SODIUM HYDROXIDE PUMP DISCHARGE LINE
44. 3/4" DIA CPVC SODIUM BISULFITE PUMP DRAIN LINE
45. 1 1/2" DIA CPVC SODIUM HYDROXIDE PUMP DRAIN LINE
46. FLOOR PIPE SUPPORT (TYP), SEE DETAIL 702 SHEET M-7.07
47. FLUSH MOUNT PIPE SUPPORT (TYP), SEE DETAIL 203 SHEET M-7.02

NOTES:

1. SHADE CANOPY AND SIDE SHADE PANELS NOT SHOWN FOR CLARITY, SEE STRUCTURAL SHEETS FOR CANOPY DETAILS.

2. CHEMICAL STORAGE TOTES SHOWN FOR ILLUSTRATION PURPOSES ONLY. CHEMICAL STORAGE TOTES ARE NOT INCLUDED IN CONTRACT DESIGN AGREEMENT.

WILSON ENGINEERS
1620 West Fountainhead Pkwy
Suite 501
Tempe, Arizona 85282
Phone: (480) 893-8860
Improving Arizona's Infrastructure Since 1942

CITY OF CHANDLER
RECLAIMED WATER INTERCONNECT FACILITY

MFS - CIP CHEMICALS FACILITY
OVERALL PLAN

CITY PROJECT NO.WW1901.203
WILSON PROJECT NO. 21007

Design: KP | Drawn: JMJ | Checked: SR
Date: 02/2022 | Wilson Project No. 21007

Rev#	Date	Description	By

VERIFY SCALES
BAR IS ONE INCH ON ORIGINAL DRAWING
0 1"
IF NOT ONE INCH ON THIS SHEET, ADJUST SCALES ACCORDINGLY

Registered Professional Engineer
30185
UDAY K. GANDHE
Date Signed 02/28/2022
ARIZONA U. S. A.

Registered Professional Engineer
41084
PREM KENGRAJ
Date Signed 02/28/2022
ARIZONA U. S. A.

Sheet No. **M-2.10**

AGENCY REVIEW

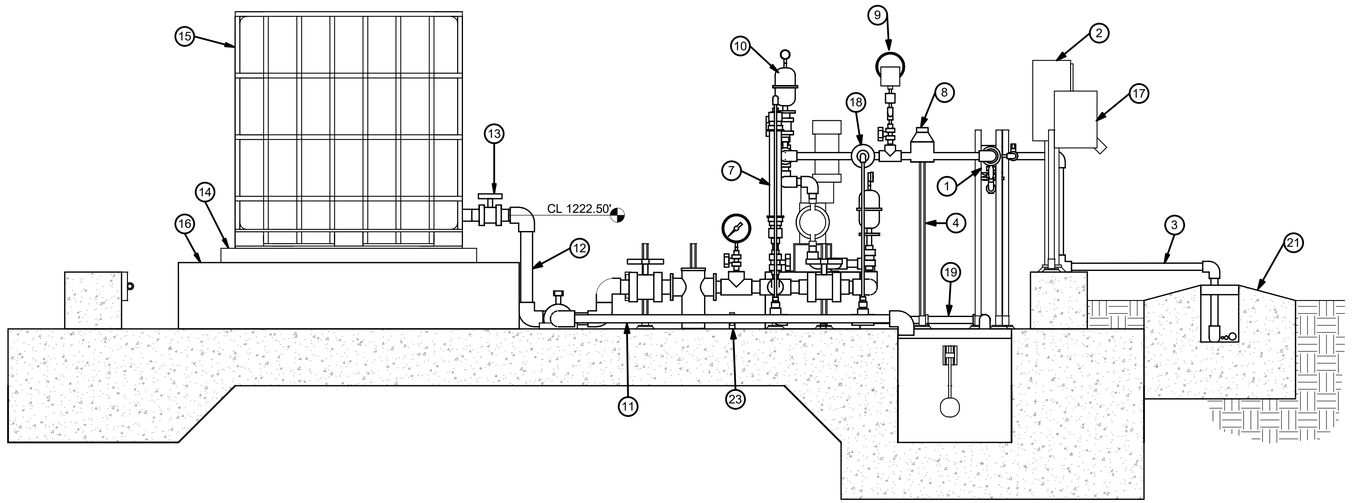

SECTION C
3/4" = 1'-0"
M-2.10

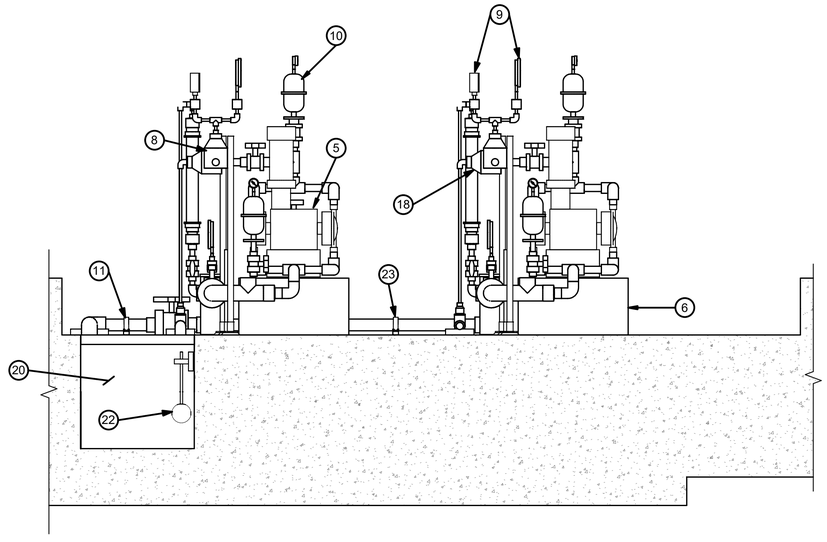

SECTION D
3/4" = 1'-0"
M-2.10

NOTES:

1. SHADE CANOPY AND SIDE SHADE PANELS NOT SHOWN FOR CLARITY, SEE STRUCTURAL SHEETS FOR CANOPY DETAILS.
2. CHEMICAL STORAGE TOTES SHOWN FOR ILLUSTRATION PURPOSES ONLY. CHEMICAL STORAGE TOTES ARE NOT INCLUDED IN CONTRACT DESIGN AGREEMENT.

KEYED NOTES

1. 1/2" DIA MAGNETIC FLOW METER
2. CITRIC ACID DIAPHRAGM METERING PUMP LOCAL CONTROL PANEL, SEE ELECTRICAL SHEETS FOR DETAILS
3. 1 1/2" DIA CPVC CITRIC ACID PUMP DISCHARGE LINE
4. PIPE SUPPORT (TYP), SEE DETAIL 506 SHEET M-7.05
5. CITRIC ACID DIAPHRAGM METERING PUMP (TYP)
6. EQUIPMENT PAD (TYP), SEE STRUCTURAL SHEETS FOR DETAILS
7. CALIBRATION COLUMN (TYP)
8. PRESSURE REGULATING VALVE (TYP)
9. PRESSURE GAUGE AND SWITCH ASSEMBLY (TYP), SEE DETAIL 302 SHEET M-7.03
10. PULSATION DAMPENER (TYP)
11. 2 1/2" DIA CITRIC ACID STORAGE TOTE DRAIN LINE
12. 2 1/2" DIA CPVC CITRIC ACID FEED LINE
13. ZERO LEAKAGE COUPLING AND BALL VALVE
14. TOTE WEIGH SCALE
15. CITRIC ACID STORAGE TOTE, 330 GALLONS
16. STORAGE TOTE CONCRETE PAD, SEE STRUCTURAL SHEETS FOR DETAILS
17. CITRIC ACID DIAPHRAGM METERING PUMP DISCONNECT SWITCH, SEE ELECTRICAL SHEETS FOR DETAILS
18. PRESSURE RELIEF VALVE (TYP)
19. 1 1/2" DIA CPVC CITRIC ACID PUMP DRAIN LINE
20. FEED AREA SUMP WITH FRP GRATING, SEE STRUCTURAL SHEETS FOR DETAILS
21. CHEMICAL TRENCH, SEE CIVIL SHEETS FOR DETAILS
22. FLOAT SWITCH (TYP), SEE ELECTRICAL SHEETS FOR DETAILS
23. FLOOR PIPE SUPPORT (TYP), SEE DETAIL 702 SHEET M-7.07

1620 West Fountainhead Pkwy
Suite 501
Tempe, Arizona 85282
Phone: (480) 893-8860

Improving Arizona's Infrastructure Since 1942

WILSON ENGINEERS

CITY OF CHANDLER
RECLAIMED WATER INTERCONNECT FACILITY

MFS - CIP CHEMICALS FACILITY
SECTIONS - 1

CITY PROJECT NO. WW1901.203
WILSON PROJECT NO. 21007

Design: KP	Drawn: JMJ	Checked: SR
Date: 02/2022	Wilson Project No. 21007	

Rev#	Date	Description	By

VERIFY SCALES
BAR IS ONE INCH ON ORIGINAL DRAWING
0 1"
IF NOT ONE INCH ON THIS SHEET, ADJUST SCALES ACCORDINGLY

Registered Professional Engineer (Civil) — 30185 UDAY K. GANDHE — Date Signed 02/28/2022 — ARIZONA U.S.A.

Registered Professional Engineer (Civil) — 41084 PREMKUMAR KENGARAJ — Date Signed 02/28/2022 — ARIZONA U.S.A.

Sheet No. **M-2.11**

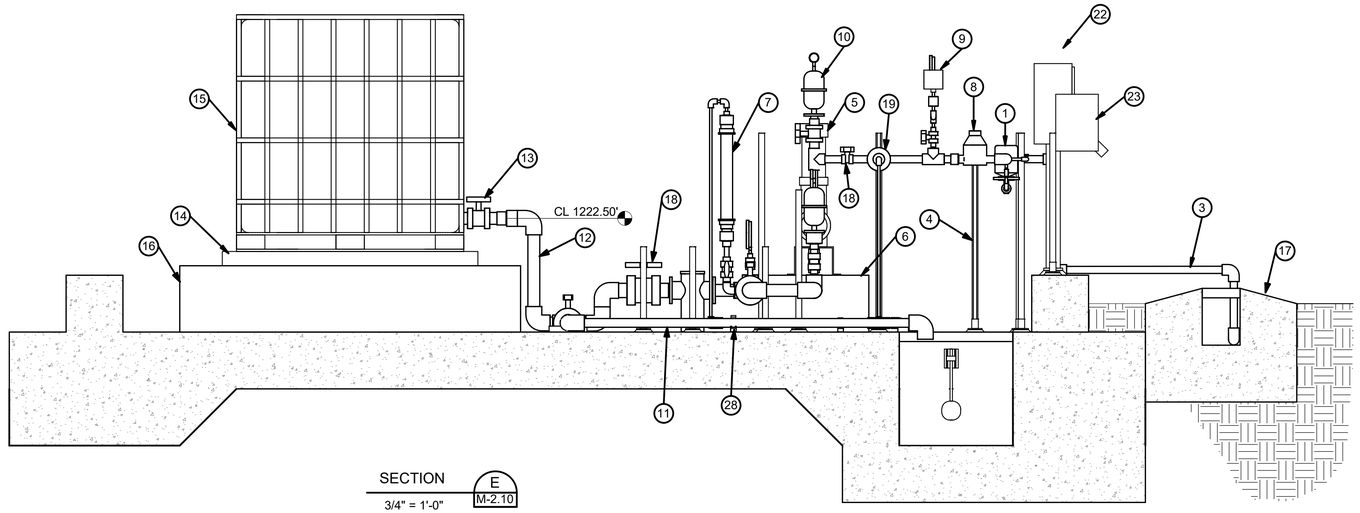

SECTION E
3/4" = 1'-0"
M-2.10

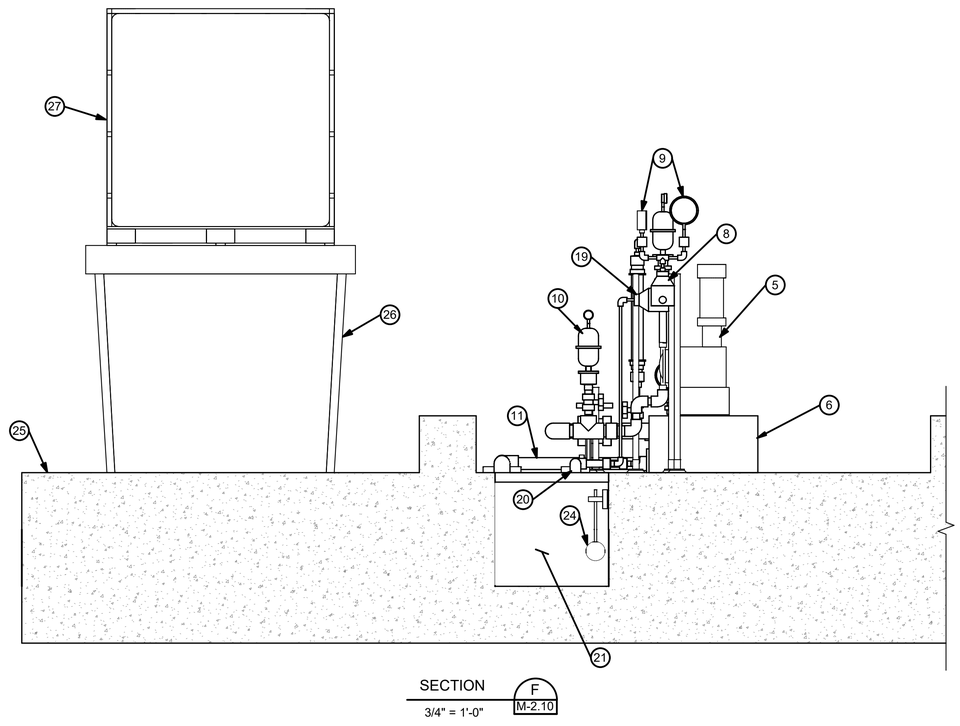

SECTION F
3/4" = 1'-0"
M-2.10

NOTES:

1. SHADE CANOPY AND SIDE SHADE PANELS NOT SHOWN FOR CLARITY, SEE STRUCTURAL SHEETS FOR CANOPY DETAILS.
2. EQUIPMENT AND PIPE LOCATIONS SHOWN ON THIS SHEET ARE TYPICAL FOR THE CONTAINMENT AND FEED AREAS OF SULFURIC ACID, SODIUM BISULFITE, AND SODIUM HYDROXIDE. PLEASE REFER TO SHEETS M-2.02 AND M-2.03 FOR PIPE SIZING OF EACH CHEMICAL.
3. CHEMICAL STORAGE TOTES SHOWN FOR ILLUSTRATION PURPOSES ONLY. CHEMICAL STORAGE TOTES ARE NOT INCLUDED IN CONTRACT DESIGN AGREEMENT.

KEYED NOTES

1. 1/8" DIA MAGNETIC FLOW METER
2. 1/2" DIA CHECK VALVE
3. 1/2" DIA CPVC SULFURIC ACID PUMP DISCHARGE LINE
4. PIPE SUPPORT (TYP), SEE DETAIL 506 SHEET M-7.05
5. SULFURIC ACID DIAPHRAGM METERING PUMP
6. EQUIPMENT PAD, SEE STRUCTURAL SHEETS FOR DETAILS
7. CALIBRATION COLUMN
8. PRESSURE REGULATING VALVE
9. PRESSURE GAUGE AND SWITCH ASSEMBLY (TYP), SEE DETAIL 302 SHEET M-7.03
10. PULSATION DAMPENER (TYP)
11. 1" DIA CPVC SULFURIC ACID STORAGE TOTE DRAIN LINE
12. 1" DIA CPVC SULFURIC ACID FEED LINE
13. ZERO LEAKAGE COUPLING AND BALL VALVE
14. TOTE WEIGH SCALE
15. SULFURIC ACID STORAGE TOTE, 330 GALLONS
16. STORAGE TOTE CONCRETE PAD, SEE STRUCTURAL SHEETS FOR DETAILS
17. CHEMICAL TRENCH, SEE CIVIL SHEETS FOR DETAILS
18. 1" DIA UNION BALL VALVE (TYP)
19. PRESSURE RELIEF VALVE
20. 1" DIA CPVC SULFURIC ACID PUMP DRAIN LINE
21. FEED AREA SUMP WITH FRP GRATING, SEE STRUCTURAL SHEETS FOR DETAILS
22. SULFURIC ACID DIAPHRAGM METERING PUMP LOCAL CONTROL PANEL, SEE ELECTRICAL SHEETS FOR DETAILS
23. SULFURIC ACID DIAPHRAGM METERING PUMP DISCONNECT SWITCH, SEE ELECTRICAL SHEETS FOR DETAILS
24. FLOAT SWITCH (TYP), SEE ELECTRICAL SHEETS FOR DETAILS
25. SELF CONTAINED TOTE STORAGE AREA, SEE STRUCTURAL SHEETS FOR DETAILS
26. IBC SPILL PALLET WITH MINIMUM SPILL CAPACITY OF 330 GALLONS, MODEL 5460-YE AS MANUFACTURED BY GRAINGER, OR APPROVED EQUAL
27. SPARE CHEMICAL STORAGE TOTE, 330 GALLONS
28. FLOOR PIPE SUPPORT (TYP), SEE DETAIL 702 SHEET M-7.07

1620 West Fountainhead Pkwy
Suite 501
Tempe, Arizona 85282
Phone: (480) 893-8860
Improving Arizona's Infrastructure Since 1942

WILSON ENGINEERS

CITY OF CHANDLER
RECLAIMED WATER INTERCONNECT FACILITY

MFS - CIP CHEMICALS FACILITY SECTIONS - 2

CITY PROJECT NO. WW1901.203
WILSON PROJECT NO. 21007

Design: **KP** | Drawn: **JMJ** | Checked: **SR**
Date: **02/2022** | Wilson Project No. **21007**

Rev#	Date	Description	By

VERIFY SCALES
BAR IS ONE INCH ON ORIGINAL DRAWING
0 1"
IF NOT ONE INCH ON THIS SHEET, ADJUST SCALES ACCORDINGLY

Registered Professional Engineer (Civil) — 30185 UDAY K. GANDHE — Date signed 02/28/2022 — ARIZONA U.S.A.

Registered Professional Engineer (Civil) — CERTIFICATE NO. 41008 — JOSEPH KENSINGER — Date signed 02/28/2022 — ARIZONA U.S.A.

Sheet No. **M-2.12**

AGENCY REVIEW

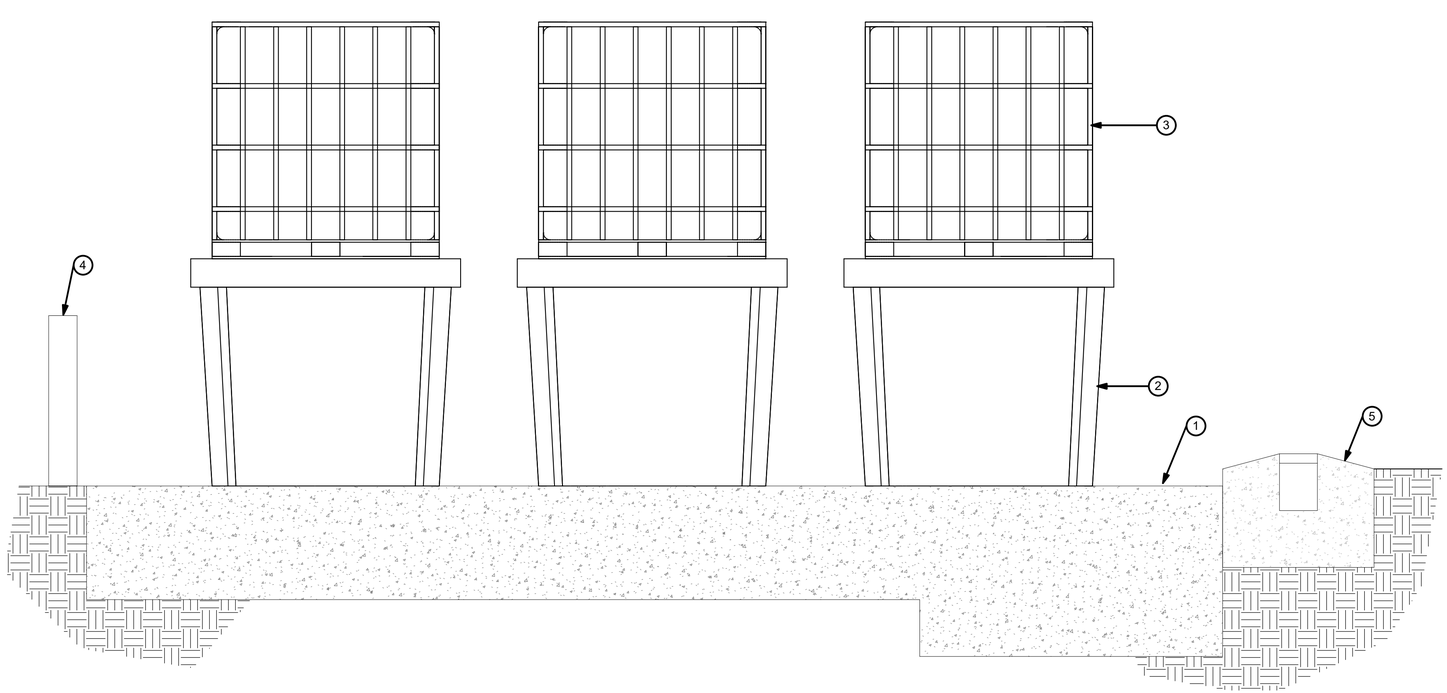

SECTION G M-2.10
3/4" = 1'-0"

KEYED NOTES

1. SELF CONTAINED TOTE STORAGE AREA, SEE STRUCTURAL SHEETS FOR DETAILS
2. IBC SPILL PALLET WITH MINIMUM SPILL CAPACITY OF 330 GALLONS, MODEL 5460-YE AS MANUFACTURED BY GRAINGER, OR APPROVED EQUAL
3. SPARE CHEMICAL STORAGE TOTE, 330 GALLONS
4. BOLLARD, SEE CIVIL SHEETS FOR DETAILS
5. CHEMICAL TRENCH, SEE CIVIL SHEETS FOR DETAILS

NOTES:

1. SHADE CANOPY AND SIDE SHADE PANELS NOT SHOWN FOR CLARITY, SEE STRUCTURAL SHEETS FOR CANOPY DETAILS.
2. CHEMICAL STORAGE TOTES SHOWN FOR ILLUSTRATION PURPOSES ONLY. CHEMICAL STORAGE TOTES ARE NOT INCLUDED IN CONTRACT DESIGN AGREEMENT.

1620 West Fountainhead Pkwy
Suite 501
Tempe, Arizona 85282
Phone: (480) 893-8860

Improving Arizona's Infrastructure Since 1942

WILSON ENGINEERS

CITY OF CHANDLER
RECLAIMED WATER INTERCONNECT FACILITY

MFS - SELF CONTAINED TOTE STORAGE AREA SECTION

CITY PROJECT NO. WW1901.203
WILSON PROJECT NO. 21007

Design: **KP** | Drawn: **JMJ** | Checked: **SR**
Date: **02/2022** | Wilson Project No. **21007**

Rev#	Date	Description	By

VERIFY SCALES
BAR IS ONE INCH ON ORIGINAL DRAWING
0 1"
IF NOT ONE INCH ON THIS SHEET, ADJUST SCALES ACCORDINGLY

Registered Professional Engineer (Civil)
CERTIFICATE NO. 30185
UDAY K. GANDHE
Date Signed 02/28/2022
ARIZONA U. S. A.

Registered Professional Engineer (Civil)
CERTIFICATE NO. 41008
SHEEKAM RENGARAJ
Date Signed 02/28/2022
ARIZONA U. S. A.

Sheet No. **M-2.16**

2/25/2022 4:36:14 PM \\phxss01\Data\PROJECT_Revit\05 Chandler Airport WRF\21007\2.0 MFS Chemical Facility.rvt

AGENCY REVIEW

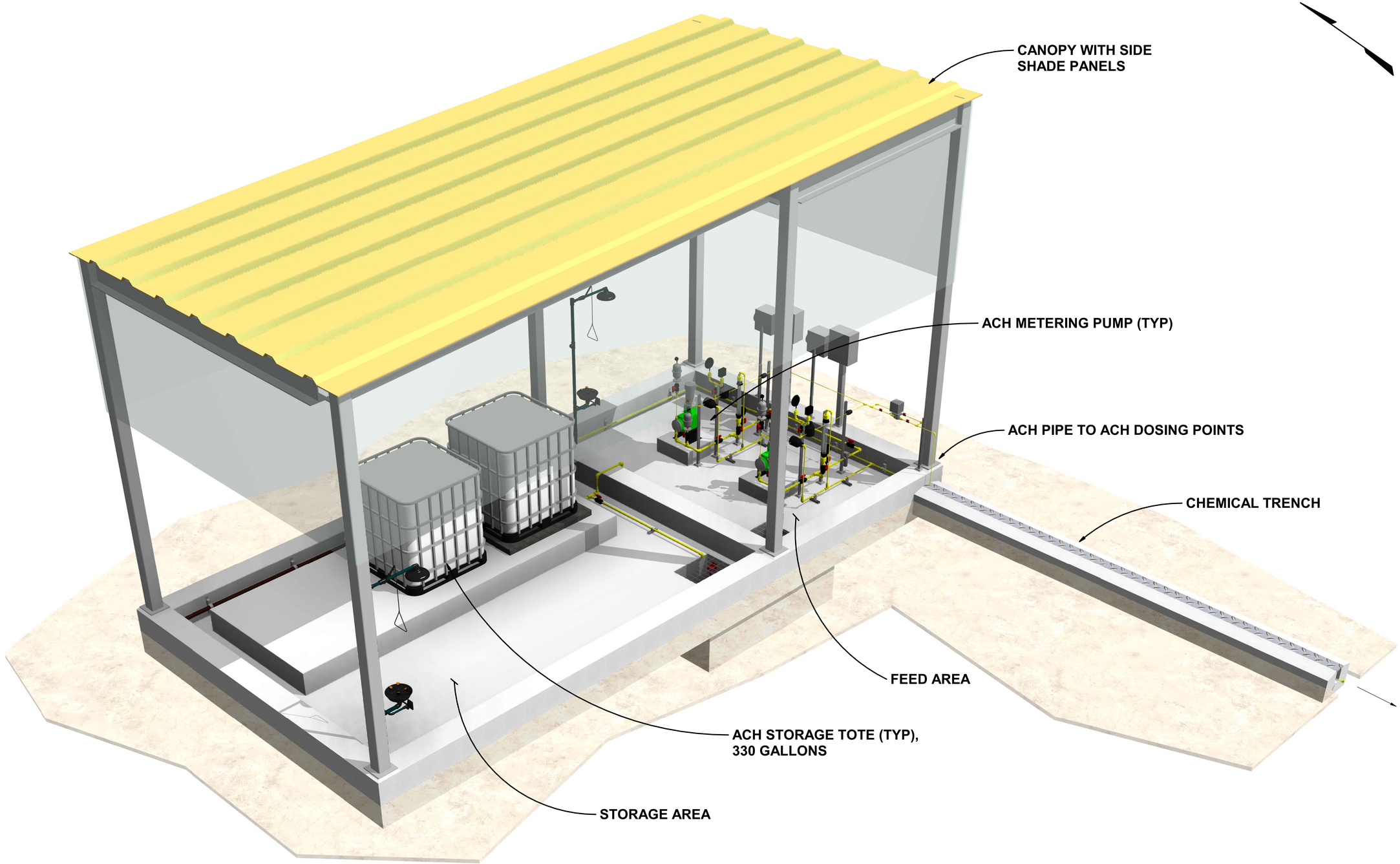

NOTE:

1. CHEMICAL STORAGE TOTES SHOWN FOR ILLUSTRATION PURPOSES ONLY. CHEMICAL STORAGE TOTES ARE NOT INCLUDED IN CONTRACT DESIGN AGREEMENT.

WILSON ENGINEERS
1620 West Fountainhead Pkwy
Suite 501
Tempe, Arizona 85282
Phone: (480) 893-8860
Improving Arizona's Infrastructure Since 1942

CITY OF CHANDLER
RECLAIMED WATER INTERCONNECT FACILITY

ACH FACILITY RENDERING

CITY PROJECT NO. WW1901.203
WILSON PROJECT NO. 21007

Design: KP
Date: 11/2021
Drawn: AJC
Wilson Project No. 21007
Checked: SR

Rev#	Date	Description	By

VERIFY SCALES
BAR IS ONE INCH ON ORIGINAL DRAWING
0 1"
IF NOT ONE INCH ON THIS SHEET, ADJUST SCALES ACCORDINGLY

Professional Engineer Certificate No. 30185 UDAY K. GANDHE State of Arizona U.S.A. Date Signed 02/28/2022

Professional Engineer Certificate No. 41086 SRIRAM RENGARAJ State of Arizona U.S.A. Date Signed 02/28/2022

Sheet No. **M-2.21**

AGENCY REVIEW

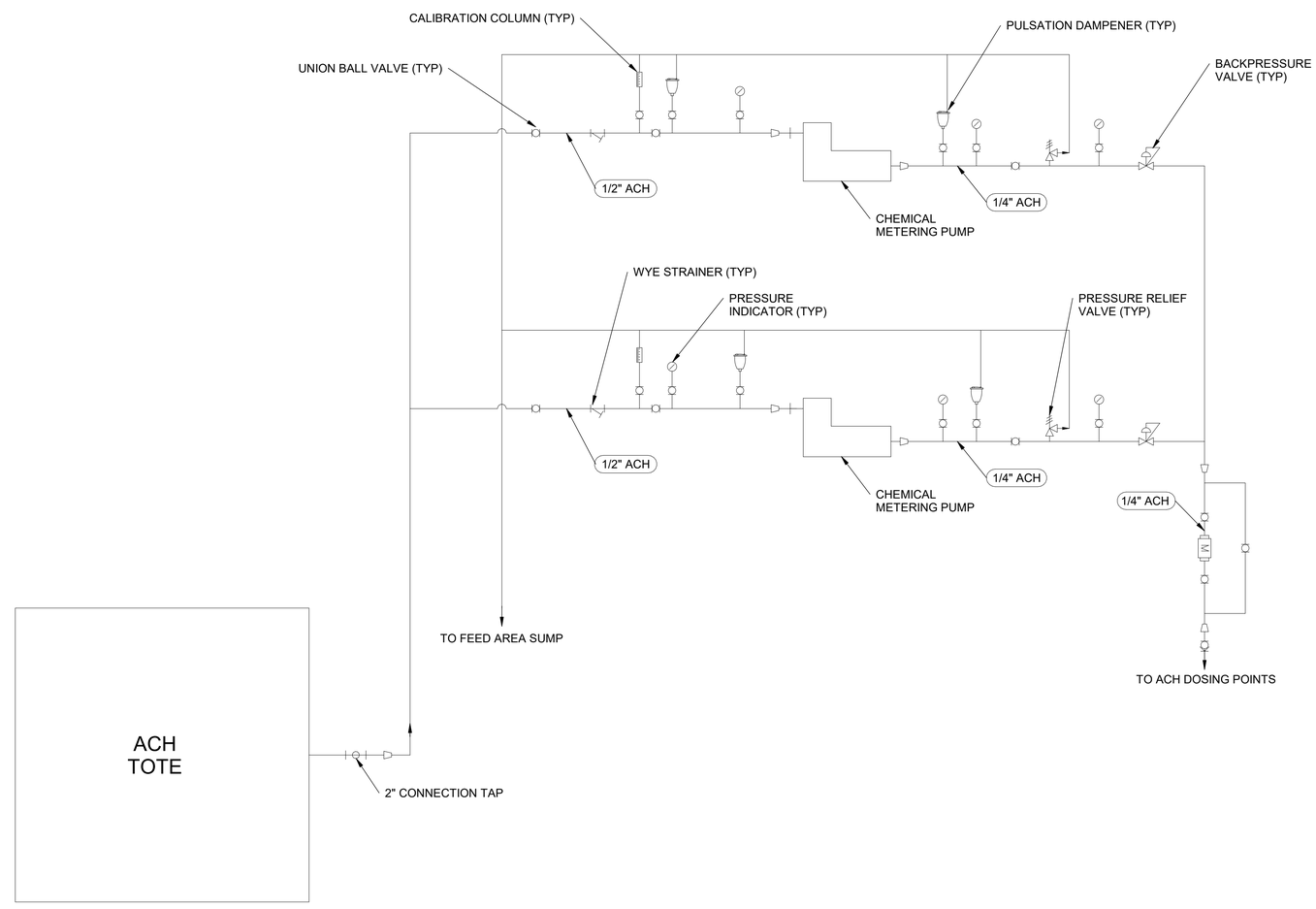

NOTES:

1. CONTRACTOR TO REFER TO DIAPHRAGM METERING PUMP MANUFACTURER FOR PULSATION DAMPENER INSTALLATION DISTANCE FROM PUMP SUCTION AND DISCHARGE.
2. CONTRACTOR TO REFER TO DIAPHRAGM METERING PUMP MANUFACTURER FOR CHANGES IN PIPE DIAMETER IN RESPECT TO DISTANCE FROM PUMP SUCTION AND DISCHARGE.
3. CHEMICAL STORAGE TOTES SHOWN FOR ILLUSTRATION PURPOSES ONLY. CHEMICAL STORAGE TOTES ARE NOT INCLUDED IN CONTRACT DESIGN AGREEMENT.

WILSON ENGINEERS
1620 West Fountainhead Pkwy
Suite 501
Tempe, Arizona 85282
Phone: (480) 893-8860
Improving Arizona's Infrastructure Since 1942

CITY OF CHANDLER
RECLAIMED WATER INTERCONNECT FACILITY

ACH FACILITY
FLOW SCHEMATIC

CITY PROJECT NO. WW1901.203
WILSON PROJECT NO.

Design: Designer | Drawn: Author | Checked: Checker
Date: 11/2021 | Wilson Project No.

Rev#	Date	Description	By

VERIFY SCALES
BAR IS ONE INCH ON ORIGINAL DRAWING
0 1"
IF NOT ONE INCH ON THIS SHEET, ADJUST SCALES ACCORDINGLY

Registered Professional Engineer (Civil)
CERTIFICATE NO. 30185
UDAY K. GANDHE
Date Signed 02/28/2022
ARIZONA U. S. A.

Registered Professional Engineer (Civil)
CERTIFICATE NO. 41008
SREERAM RENGHRAJ
Date Signed 02/28/2022
ARIZONA U. S. A.

Sheet No. M-2.22

2/25/2022 3:03:47 PM G:\PROJECT_Revit\05 Chandler Airport WRF\21007\8.0 ACH Facility.rvt

AGENCY REVIEW

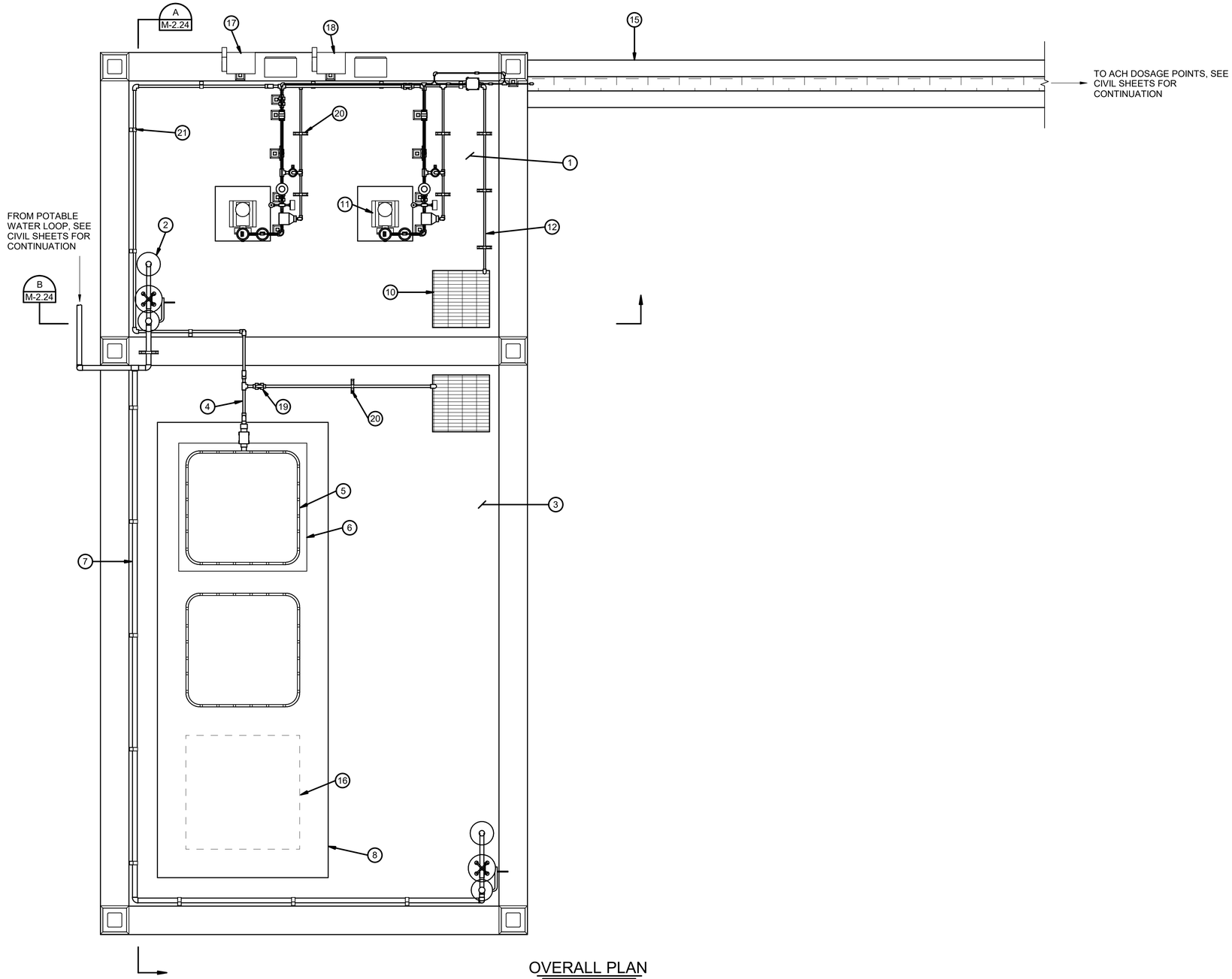

OVERALL PLAN
1/2" = 1'-0"

KEYED NOTES

1. FEED AREA
2. EMERGENCY EYEWASH/SHOWER STATION (TYP), SEE DETAIL 601 SHEET M-7.06
3. CONTAINMENT AREA
4. 1/2" DIA CPVC ACH FEED LINE
5. ACH STORAGE TOTE, 300 GALLONS
6. TOTE WEIGH SCALE
7. 2" DIA COPPER POTABLE WATER PIPE
8. STORAGE TOTE CONCRETE PAD, SEE STRUCTURAL SHEETS FOR DETAILS
9. CONTAINMENT AREA SUMP WITH FRP GRATING, SEE STRUCTURAL SHEETS FOR DETAILS
10. FEED AREA SUMP WITH FRP GRATING, SEE STRUCTURAL SHEETS FOR DETAILS
11. ACH DIAPHRAGM METERING PUMP (TYP)
12. 1/4" DIA CPVC ACH PUMP DRAIN LINE
13. EQUIPMENT PAD, SEE STRUCTURAL SHEETS FOR DETAILS
14. 1/4" DIA ACH PUMP DISCHARGE LINE
15. CHEMICAL TRENCH, SEE CIVIL SHEETS FOR DETAILS
16. FUTURE CHEMICAL STORAGE TOTE (TYP)
17. ACH DIAGRAM METERING PUMP LOCAL CONTROL PANEL (TYP), SEE ELECTRICAL SHEETS FOR DETAILS
18. ACH DIAGRAM METERING PUMP DISCONNECT SWITCH (TYP), SEE ELECTRICAL SHEETS FOR DETAILS
19. 1/2" DIA BALL VALVE
20. FLOOR PIPE SUPPORT (TYP), SEE DETAIL 702 SHEET M-7.07
21. FLUSH MOUNT PIPE SUPPORT (TYP), DETAIL 203 SHEET M-7.02

NOTES:

1. SHADE CANOPY NOT SHOWN FOR CLARITY.
2. CHEMICAL STORAGE TOTES SHOWN FOR ILLUSTRATION PURPOSES ONLY. CHEMICAL STORAGE TOTES ARE NOT INCLUDED IN CONTRACT DESIGN AGREEMENT.

1620 West Fountainhead Pkwy
Suite 501
Tempe, Arizona 85282
Phone: (480) 893-8860

Improving Arizona's Infrastructure Since 1942

WILSON ENGINEERS

CITY OF CHANDLER
RECLAIMED WATER INTERCONNECT FACILITY

ACH FACILITY
OVERALL PLAN

CITY PROJECT NO. WW1901.203
WILSON PROJECT NO. 21007

Design: KP	Drawn: AJC	Checked: SR
Date: 11/2021	Wilson Project No. 21007	

Rev#	Date	Description	By

VERIFY SCALES
BAR IS ONE INCH ON ORIGINAL DRAWING
0 1"
IF NOT ONE INCH ON THIS SHEET, ADJUST SCALES ACCORDINGLY

Registered Professional Engineer (Civil)
CERTIFICATE NO. 30185
UDAY K. GANDHE
Date Signed 02/28/2022
ARIZONA U. S. A.

Registered Professional Engineer (Civil)
CERTIFICATE NO. 41008
SREERAM RENGARAJ
Date Signed 02/28/2022
ARIZONA U. S. A.

Sheet No. M-2.23

2/25/2022 3:03:48 PM G:\PROJECT_Revit\05 Chandler Airport WRF\21007\8.0 ACH Facility.rvt

AGENCY REVIEW

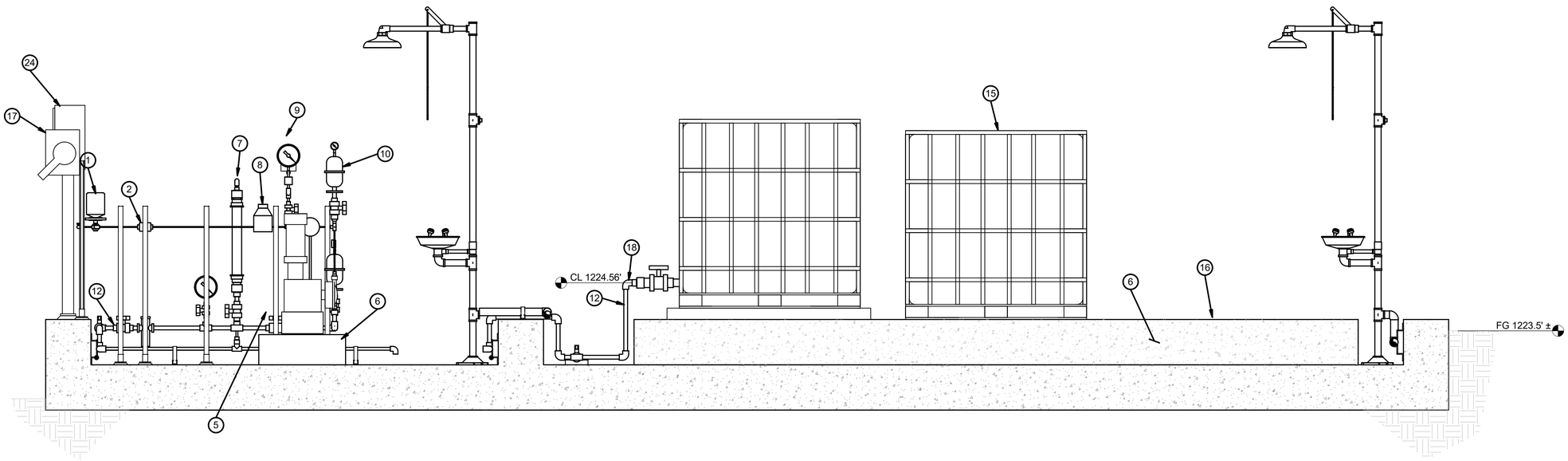

SECTION A M-2.23
3/4" = 1'-0"

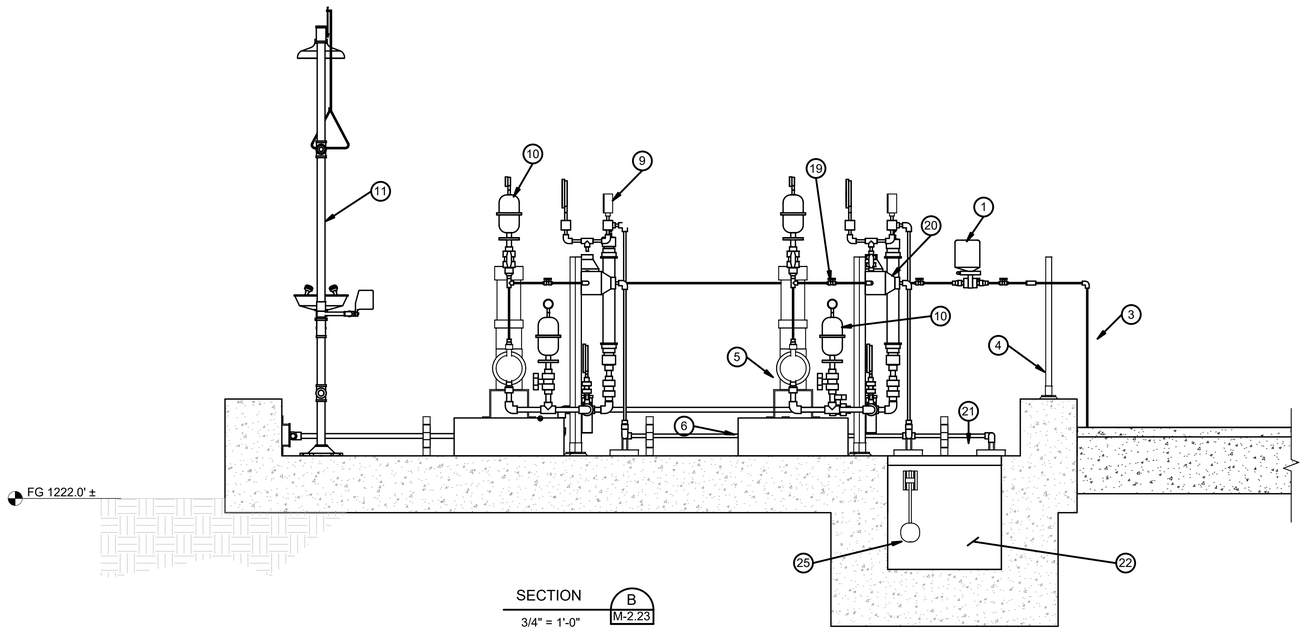

SECTION B M-2.23
3/4" = 1'-0"

NOTE:

1. SHADE CANOPY AND SIDE SHADE PANELS NOT SHOWN FOR CLARITY, SEE STRUCTURAL SHEETS FOR CANOPY DETAILS.
2. CHEMICAL STORAGE TOTES SHOWN FOR ILLUSTRATION PURPOSES ONLY. CHEMICAL STORAGE TOTES ARE NOT INCLUDED IN CONTRACT DESIGN AGREEMENT.

KEYED NOTES

1. 1/4" DIA MAGNETIC FLOWMETER
2. 1/4" DIA CHECK VALVE
3. 1/4" DIA CPVC ACH PUMP DISCHARGE LINE
4. PIPE SUPPORT (TYP), SEE DETAIL 506 SHEET M-7.05
5. ACH DIAPHRAGM METERING PUMP
6. EQUIPMENT PAD, SEE STRUCTURAL SHEETS FOR DETAILS
7. CALIBRATION COLUMN (TYP)
8. PRESSURE REGULATING VALVE
9. PRESSURE GAUGE AND SWITCH ASSEMBLY (TYP), SEE DETAIL 302 SHEET M-7.03
10. PULSATION DAMPENER (TYP)
11. EMERGENCY EYEWASH/SHOWER STATION (TYP), SEE DETAIL 601 SHEET M-7.06
12. 1/2" DIA CPVC ACH FEED LINE
13. 2" TOTE CONNECTION TAP WITH ZERO LEAKAGE COUPLING AND BALL VALVE
14. TOTE WEIGH SCALE
15. ACH STORAGE TOTE, 300 GALLON (TYP)
16. SPARE ACH STORAGE TOTE, 300 GALLON
17. ACH DIAPHRAGM METERING PUMP DISCONNECT SWITCH, SEE ELECTRICAL SHEETS FOR DETAILS
18. 2" X 1/2" REDUCER
19. 1/4" DIA BALL VALVE
20. PRESSURE RELIEF VALVE (TYP)
21. 1/4" DIA CPVC SODIUM BISULFITE PUMP DRAIN LINE
22. FEED AREA SUMP WITH FRP GRATING, SEE STRUCTURAL SHEETS FOR DETAILS
23. CHEMICAL TRENCH, SEE CIVIL SHEETS FOR DETAILS
24. ACH DIAPHRAGM METERING PUMP LOCAL CONTROL PANEL, SEE ELECTRICAL SHEETS FOR DETAILS
25. FLOAT SWITCH (TYP), SEE ELECTRICAL SHEETS FOR DETAILS

1620 West Fountainhead Pkwy
Suite 501
Tempe, Arizona 85282
Phone: (480) 893-8860

Improving Arizona's Infrastructure Since 1942

WILSON ENGINEERS

CITY OF CHANDLER
RECLAIMED WATER INTERCONNECT FACILITY

ACH FACILITY SECTIONS

CITY PROJECT NO. WW1901.203
WILSON PROJECT NO. 21007

Design: KP	Drawn: AJC	Checked: SR
Date: 11/2021	Wilson Project No. 21007	

Rev#	Date	Description	By

VERIFY SCALES
BAR IS ONE INCH ON ORIGINAL DRAWING
0 1"
IF NOT ONE INCH ON THIS SHEET, ADJUST SCALES ACCORDINGLY

Registered Professional Engineer (Civil) CERTIFICATE NO. 30185 UDAY K. GANDHE Date Signed 02/28/2022 ARIZONA U. S. A.

Registered Professional Engineer (Civil) CERTIFICATE NO. 41008 SREERAM RENGARAJ Date Signed 02/28/2022 ARIZONA U. S. A.

Sheet No. M-2.24

2/25/2022 3:03:49 PM G:\PROJECT_Revit\05 Chandler Airport WRF\21007\8.0 ACH Facility.rvt

AGENCY REVIEW

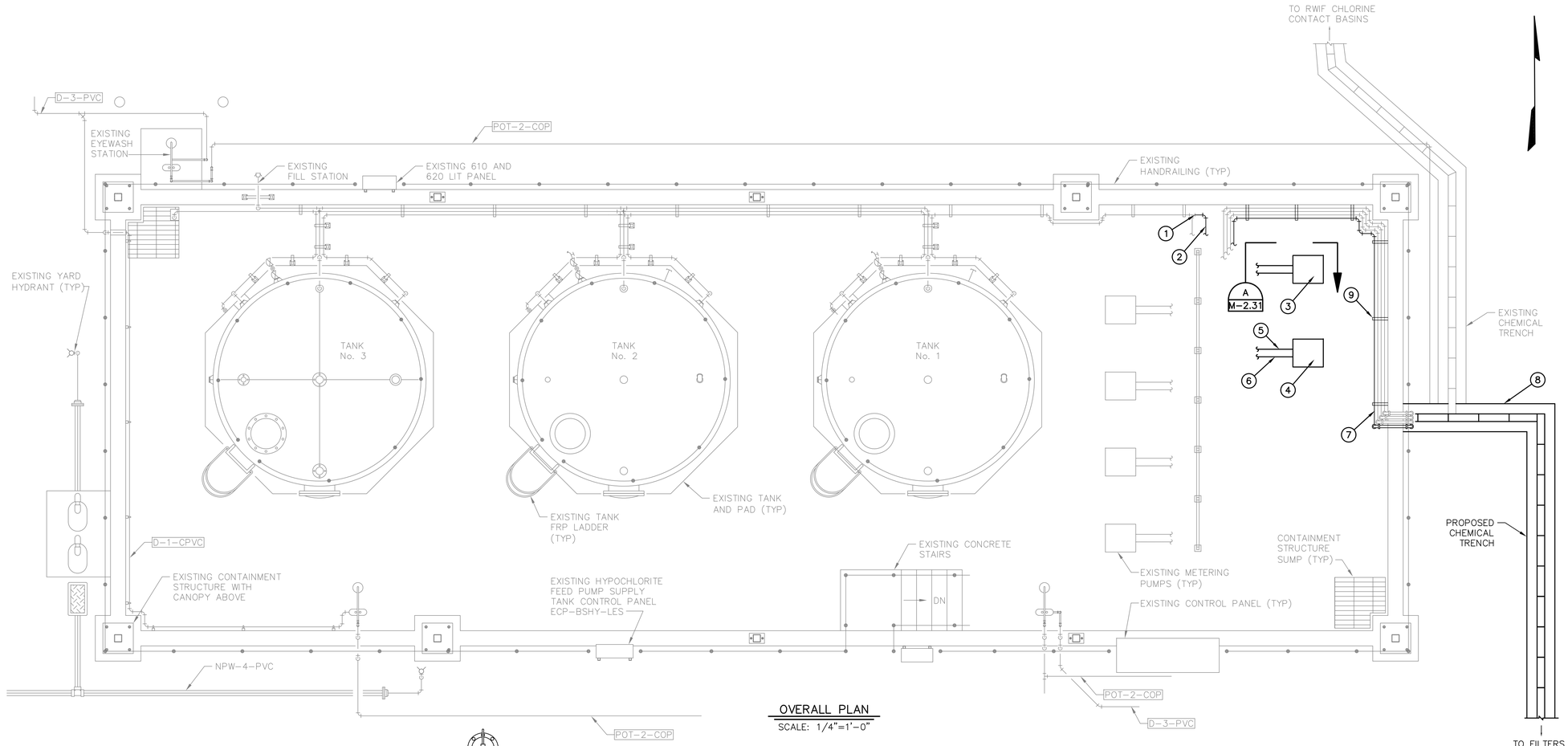

OVERALL PLAN
SCALE: 1/4"=1'-0"

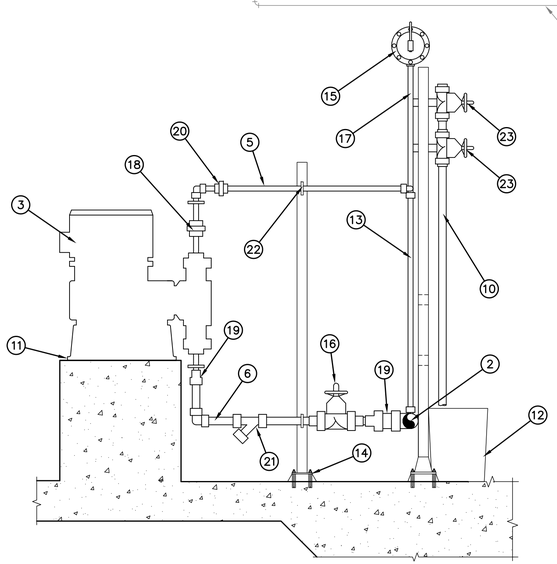

SECTION A M-2.31
SCALE: 3/4"=1'-0"

KEYED NOTES

1. CONNECTION TO EXISTING 3" SODIUM HYPOCHLORITE FEED LINE
2. 3" SODIUM HYPOCHLORITE FEED LINE
3. SODIUM HYPOCHLORITE DIAPHRAGM METERING PUMP (TYP), INSTALLATION IS SIMILAR FOR BOTH PUMPS
4. EQUIPMENT PAD, SEE STRUCTURAL SHEETS FOR DETAILS
5. 1/4" DIA PUMP DISCHARGE LINE (TYP)
6. 1/4" DIA SODIUM HYPOCHLORITE PUMP FEED LINE (TYP)
7. 1/4" DIA SODIUM HYPOCHLORITE LINE TO RWIF MEMBRANE FACILITY
8. EXISTING CHEMICAL TRENCH USED TO ROUTE SODIUM HYPOCHLORITE PIPE TO RWIF MEMBRANE FACILITY
9. NEW FITTING FOR FOUR DISCHARGE LINES ALONG THE CONTAINMENT WALL
10. 1" DIA PUMP DRAIN LINE
11. ANCHOR METERING PUMPS TO CONCRETE BASE PER MANUFACTURER'S RECOMMENDATION
12. 5 GALLON BUCKET
13. 1/4" PRESSURE RELIEF LINE TO THE 3" FEED LINE
14. UNISTRUT POST BASE WITH NON-SHRINK GROUT (TYP)
15. PULSATION DAMPENER
16. UNION DIAPHRAGM VALVE (TYP)
17. ALL VALVES AND FITTINGS NOT SHOWN FOR CLARITY
18. UNION FITTING
19. REDUCER (TYP)
20. TRUE UNION BALL CHECK VALVE
21. STRAINER AS SUPPLIED BY THE PUMP MANUFACTURER
22. PIPE SUPPORT, SEE DETAIL 506 SHEET M-7.05
23. UNION DIAPHRAGM VALVE FOR DRAIN LINE, INSTALLED AT THE BACK OF PIPE RACK

1620 West Fountainhead Pkwy
Suite 501 85282
Tempe, Arizona
Phone: (480) 893-8860
Improving Arizona's Infrastructure Since 1942
WILSON ENGINEERS

CITY OF CHANDLER
RECLAIMED WATER INTERCONNECT FACILITY

MODIFIED BULK SODIUM HYPOCHLORITE FACILITY PLAN AND SECTION

CITY PROJECT NO. WW1901.203
WILSON PROJECT NO. 21007

Design: HA	Drawn: JMJ	Checked: SR
Date: 02/2022	Wilson Project No.: 21007	

Rev#	Date	Description	By

VERIFY SCALES
BAR IS ONE INCH ON ORIGINAL DRAWING
0 1"
IF NOT ONE INCH ON THIS SHEET, ADJUST SCALES ACCORDINGLY

Registered Professional Engineer (Civil) CERTIFICATE NO. 30185 UDAY K. GANDHE Date Signed 02/28/2022 ARIZONA U.S.A.

Registered Professional Engineer (Civil) CERTIFICATE NO. 41008 SREERAM RENGARAJ Date Signed 02/28/2022 ARIZONA U.S.A.

0 2 4 8
1/4" = 1'-0"

Sheet No. M-2.31

AGENCY REVIEW

XREFS: TB-WE-D; BSHF BUILDING; SEAL-UKG; SEAL-SR

G:\PROJECT\21007\CADD\DESIGN\MECHANICAL\21007 M-2.31.DWG, 2/25/2022 2:28:21 PM, acantella, 1:2.1887

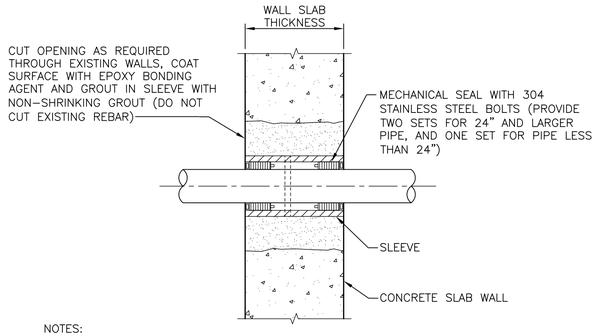

NOTES:

1. SLEEVE DIAMETER SHALL BE PER MODULAR CASING SEAL MANUFACTURER.
2. 6" DIAMETER SLEEVES AND SMALLER SHALL BE SCHEDULE 40 304 STAINLESS STEEL PIPE.
3. 8" DIAMETER SLEEVES AND LARGER SHALL BE 1/4" THICK 304 STAINLESS STEEL PIPE.
4. SLEEVE SHALL BE HOT-DIP GALVANIZED AFTER FABRICATION.
5. SLEEVES FOR ELECTRICAL CONDUIT SHALL BE SCHEDULE 80 PVC.
6. FOR EXISTING CONCRETE OR MASONRY WALLS, CORE DRILL WALL OPENING IN LIEU OF WALL SLEEVE.
7. FOR STRUCTURAL REINFORCEMENT AROUND PIPING. SEE STRUCTURAL DETAIL SHEET.

SLEEVE – INSTALLATION THROUGH EXISTING WALLS AND FLOOR SLABS DRY CONDITIONS

DETAIL	101
NOT TO SCALE	–

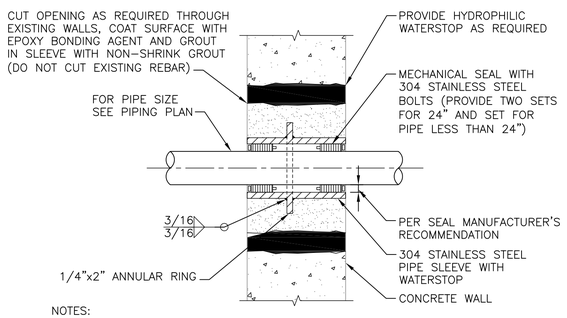

NOTES:

1. SLEEVE DIAMETER SHALL BE MECHANICAL SEAL PER MANUFACTURER.
2. FOR NEW CONSTRUCTION, SLEEVES SHALL BE CAST INTO WALL. BLOCKOUTS AND SUBSEQUENT GROUTING IN SLEEVES WILL NOT BE PERMITTED UNLESS A KEYED WATERSTOP JOINT IS PROVIDED.
3. FOR STRUCTURAL REINFORCEMENT AROUND PIPING SEE STRUCTURAL DETAIL SHEET.
4. 6" DIAMETER SLEEVES AND SMALLER SHALL BE 304 STAINLESS STEEL PIPE.
5. 8" DIAMETER SLEEVES AND LARGER SHALL BE 1/4" THICK 304 STAINLESS STEEL PIPE.
6. SLEEVE SHALL BE 304 STAINLESS STEEL.

SLEEVE – INSTALLATION THROUGH EXISTING WALLS AND FLOOR SLABS WET CONDITIONS

DETAIL	104
NOT TO SCALE	–

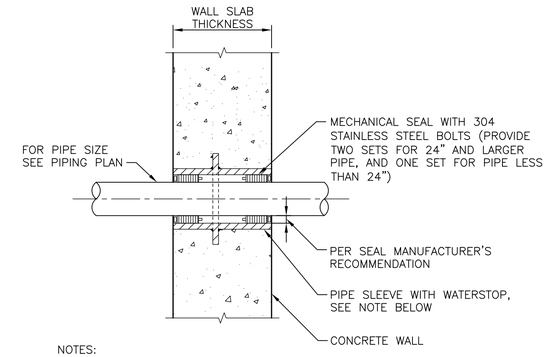

NOTES:

1. FOR STRUCTURAL REINFORCEMENT AROUND PIPING SEE STRUCTURAL DETAIL SHEET.
2. SLEEVE DIAMETER SHALL BE PER MECHANICAL SEAL MANUFACTURER.
3. 6" DIAMETER SLEEVES AND SMALLER SHALL BE SCHEDULE 40 304 STAINLESS STEEL PIPE.
4. 8" DIAMETER SLEEVES AND LARGER SHALL BE 1/4" THICK 304 STAINLESS STEEL PIPE.
5. SLEEVE SHALL BE 304 STAINLESS STEEL.

SLEEVE – INSTALLATION THROUGH NEW WALLS AND FLOOR SLABS WET CONDITIONS

DETAIL	102
NOT TO SCALE	–

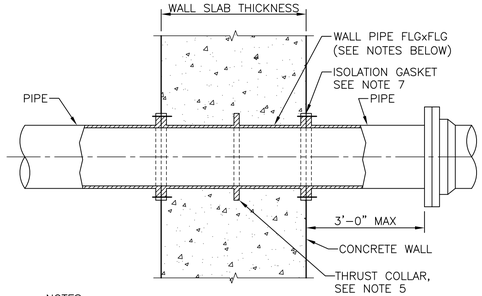

NOTES:

1. WALL PIPE IS TO SET FLUSH WITH WALL UNLESS OTHERWISE NOTED.
2. FLANGES SHOULD BE DRILLED AND TAPPED FOR STUDS.
3. WALL PIPE SHALL BE THRUST COLLAR WALL PIPE FABRICATED FROM CENTRIFUGALLY CAST DUCTILE IRON AS MANUFACTURED BY AMERICAN DUCTILE IRON PIPE COMPANY, OR EQUAL.
4. JOINTS SHALL BE FULLY RESTRAINED UNLESS OTHER WISE NOTED.
5. WALL PIPE SHALL BE CAPABLE OF RESISTING THRUST.
6. PIPE SHALL BE INSTALLED STRAIGHT WITHOUT HORIZONTAL OR VERTICAL OFFSET. DO NOT USE JOINT ANGULAR DEFLECTION TO MAKE UP FOR MISALIGNED PIPE.
7. DIELECTRIC ISOLATION GASKET AS REQUIRED
8. WALL PIPE CAN BE MJ-FLG, MJ-MJ, FLG-GLG (ABOVE), MJ-PE AND FLG-PE FOR PIPES 12" DIAMETER AND SMALLER.
9. FOR PIPES LARGER THAN 12", WALL PIPE CAN BE SAME COMBINATIONS AS ABOVE, EXCEPT WITH PE/FST IN PLACE OF MJ.

TYPICAL WALL SLAB FITTING

DETAIL	105
NOT TO SCALE	–

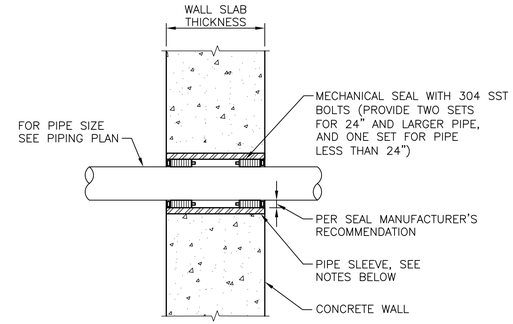

NOTES:

1. FOR STRUCTURAL REINFORCEMENT AROUND PIPING SEE STRUCTURAL DETAIL SHEETS.
2. SLEEVE DIAMETER SHALL BE PER MECHANICAL SEAL MANUFACTURER.
3. 6" DIAMETER SLEEVES AND SMALLER SHALL BE SCHEDULE 40 304 STAINLESS STEEL PIPE.
4. 8" DIAMETER SLEEVES AND LARGER SHALL BE 1/4" THICK 304 STAINLESS STEEL PIPE.
5. SLEEVE SHALL BE 304 STAINLESS STEEL.

SLEEVE – INSTALLATION THROUGH NEW WALLS AND FLOOR SLABS DRY CONDITIONS

DETAIL	103
NOT TO SCALE	–

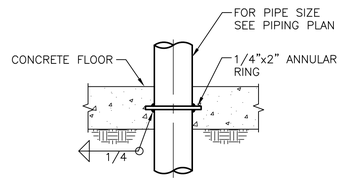

NOTES:

1. FOR STRUCTURAL REINFORCEMENT AROUND PIPING SEE STRUCTURAL DETAIL SHEET.
2. IF FORMING IS REQUIRED TO POUR FLOOR SLAB DO NOT USE THIS DETAIL. USE DETAIL 106 THIS SHEET.

FLOOR SLAB PIPE PENETRATION

DETAIL	106
NOT TO SCALE	–

1620 West Fountainhead Pkwy
Suite 501 85282
Tempe, Arizona
Phone: (480) 893-8860
Improving Arizona's Infrastructure Since 1942
WILSON ENGINEERS

CITY OF CHANDLER
RECLAIMED WATER INTERCONNECT FACILITY

TYPICAL DETAILS – 1

CITY PROJECT NO. WW1901.203
WILSON PROJECT NO. 21007

Design: HA	Drawn: AJC	Checked: SR
Date: 02/2022	Wilson Project No.: 21007	

Rev#	Date	Description	By

VERIFY SCALES
BAR IS ONE INCH ON ORIGINAL DRAWING
0 1"
IF NOT ONE INCH ON THIS SHEET, ADJUST SCALES ACCORDINGLY

Registered Professional Engineer
CERTIFICATE NO.
30185
UDAY K. GANDHE
Date Signed 02/28/2022
ARIZONA U. S. A.

Registered Professional Engineer
CERTIFICATE NO.
41008
SREERAM RENGARAJ
Date Signed 02/28/2022
ARIZONA U. S. A.

Sheet No. M-7.01

G:\PROJECT\21007\CADD\DESIGN\MECHANICAL\21007 M-7.01.DWG, 2/25/2022 2:29:08 PM, acantella, 1:2.1887

AGENCY REVIEW

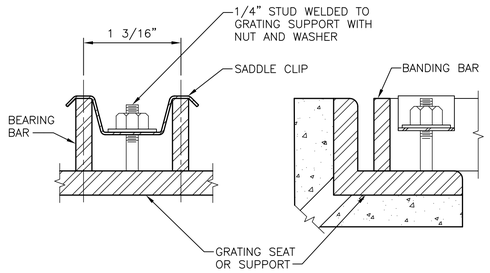

NOTES:

1. PROVIDE 4 CLIPS PER GRATING PANEL, APPROXIMATELY 4" FROM PANEL CORNERS. MAXIMUM CLIP SPACING AT 36" ON CENTER.
2. STUD, NUT, WASHER AND CLIP TO BE THE SAME MATERIAL AS THE GRATING EXCEPT FOR ALUMINUM USE SST.
3. AT FRP GRATING USE 1/4" FRP ALL TREAD BOLTS AND ADHESIVE ANCHORS AS APPROPRIATE.

GRATING ANCHOR

DETAIL	201
NOT TO SCALE	–

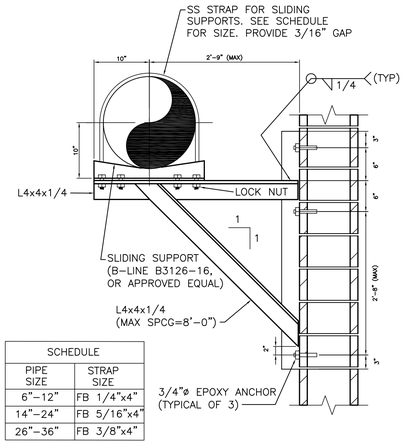

SCHEDULE	
PIPE SIZE	STRAP SIZE
6"–12"	FB 1/4"x4"
14"–24"	FB 5/16"x4"
26"–36"	FB 3/8"x4"

SLIDING WALL MOUNTED PIPE SUPPORT

DETAIL	202
NOT TO SCALE	–

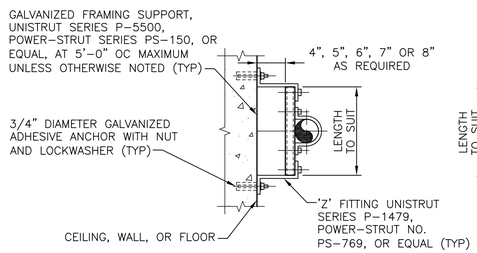

EXTENDED MOUNT

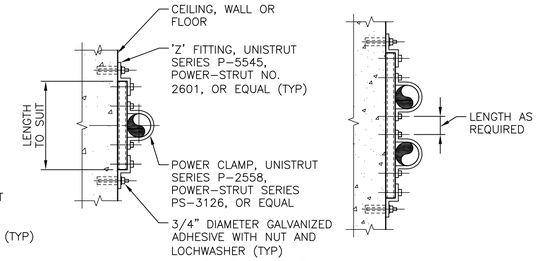

FLUSH MOUNT

PIPE SUPPORT

DETAIL	203
NOT TO SCALE	–

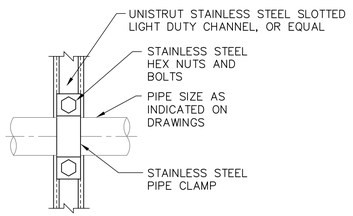

PLAN

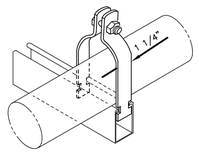

ISO

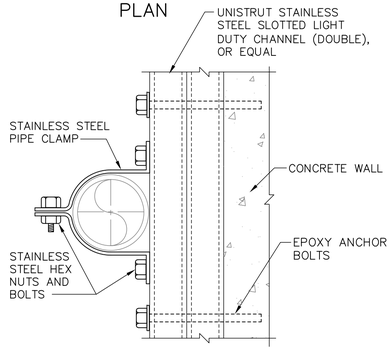

SECTION

(HORIZONTAL WALL STRAP SUPPORT FOR CHEMICAL PIPING)

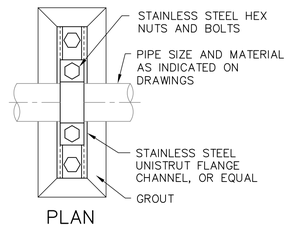

PLAN

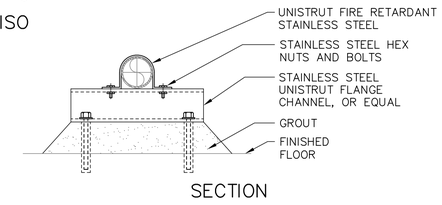

SECTION

NOTE:
FOR MULTIPLE FLOOR PIPES, EXTEND UNISTRUT CHANNEL AND PROVIDE REASONABLE SPACING BETWEEN STRAPS. GROUT SHALL BE EXPANDED AS WELL AS PROPER NUMBER OF ANCHOR BOLTS TO STABILIZE SUPPORT.

(FLOOR AND BOTTOM MOUNTED PIPE SUPPORTS FOR CHEMICAL PIPING)

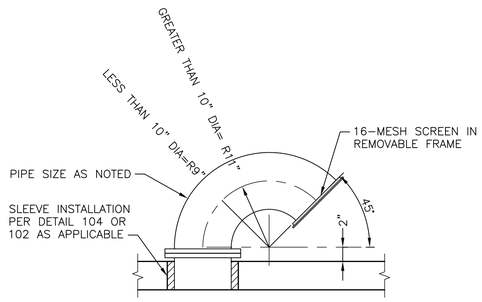

GOOSENECK

DETAIL	204
NOT TO SCALE	–

FLUSH MOUNT PIPE SUPPORT

DETAIL	205
NOT TO SCALE	–

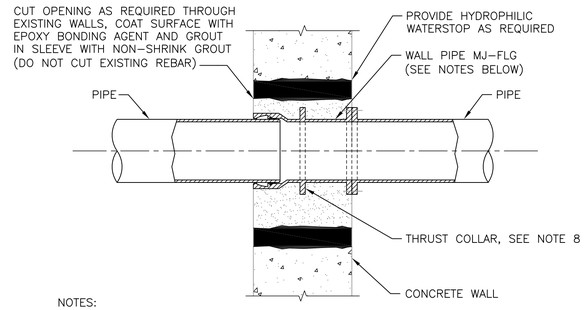

NOTES:

1. WALL PIPE CAN BE MJ–FLG (ABOVE), MJ–MJ, FLG–FLG, MJ–PE, AND FLG–PE FOR PIPES 12" DIAMETER AND SMALLER.
2. FOR PIPES LARGER THAN 12", WALL PIPE CAN BE SAME COMBINATIONS AS ABOVE, EXCEPT WITH PE/FST IN PLACE OF MJ.
3. WALL PIPE IS TO SET FLUSH WITH WALL UNLESS OTHERWISE NOTED.
4. FLANGES AND MJ SHOULD BE DRILLED AND TAPPED FOR STUDS.
5. WALL PIPE SHALL BE THRUST COLLAR WALL PIPE FABRICATED FROM CENTRIFUGALLY CAST DUCTILE IRON AS MANUFACTURED BY AMERICAN DUCTILE IRON PIPE COMPANY, OR EQUAL.
6. FOR STRUCTURAL REINFORCEMENT AROUND PIPING SEE STRUCTURAL DETAIL SHEETS
7. JOINTS SHALL BE FULLY RESTRAINED UNLESS OTHER WISE NOTED.
8. WALL PIPE SHALL BE CAPABLE OF RESISTING THRUST.
9. PIPE SHALL BE INSTALLED STRAIGHT WITHOUT HORIZONTAL OR VERTICAL OFFSET. DO NOT USE JOINT ANGULAR DEFLECTION TO MAKE UP FOR MISALIGNED PIPE.

TYPICAL WALL SLAB FITTING – INSTALLATION THROUGH EXISTING WALLS AND FLOOR SLABS WET CONDITIONS

DETAIL	206
NOT TO SCALE	–

1620 West Fountainhead Pkwy
Suite 501
Tempe, Arizona 85282
Phone: (480) 893-8860
Improving Arizona's Infrastructure Since 1942
WILSON ENGINEERS

CITY OF CHANDLER
RECLAIMED WATER INTERCONNECT FACILITY

TYPICAL DETAILS – 2

CITY PROJECT NO. WW1901.203
WILSON PROJECT NO. 21007

Design: HA	Drawn: AJC	Checked: SR
Date: 02/2022	Wilson Project No.: 21007	

Rev#	Date	Description	By

VERIFY SCALES
BAR IS ONE INCH ON ORIGINAL DRAWING
0 1"
IF NOT ONE INCH ON THIS SHEET, ADJUST SCALES ACCORDINGLY

Registered Professional Engineer (Civil) CERTIFICATE NO. 30185 UDAY K. GANDHE Date Signed 02/28/2022 ARIZONA U. S. A.

Registered Professional Engineer (Civil) CERTIFICATE NO. 41008 SREERAM RENGARAJ Date Signed 02/28/2022 ARIZONA U. S. A.

Sheet No. M–7.02

G:\PROJECT\21007\CADD\DESIGN\MECHANICAL\21007 M–7.02.DWG, 2/25/2022 2:20:12 PM, acantella, 1:2.1887

AGENCY REVIEW

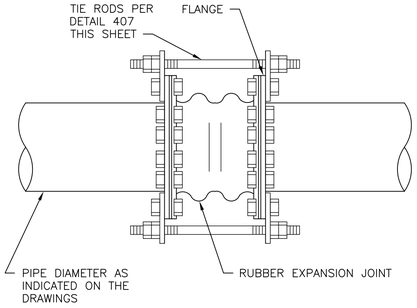

RESTRAINED RUBBER EXPANSION JOINTS

DETAIL	301
NOT TO SCALE	–

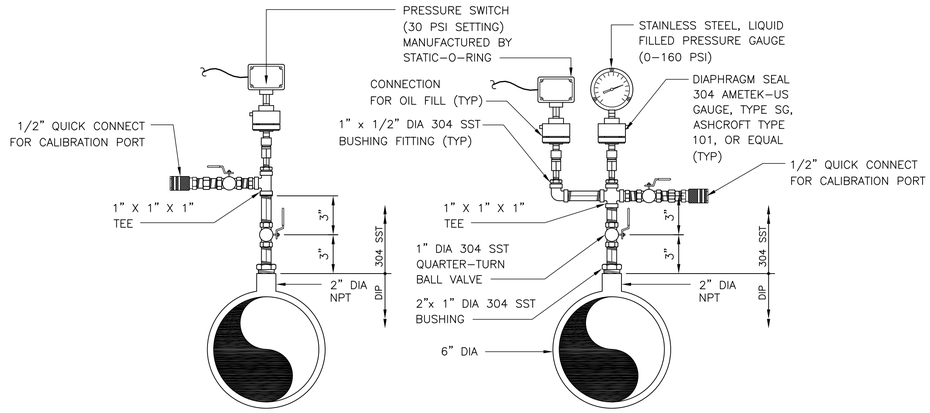

NOTE:
1. PROVIDE BALL VALVE, NOT CORPORATION STOPS.
2. SADDLE TAPS ARE NOT ALLOWED.
3. CORPORATION STOP NOT ALLOWED.
4. GALVANIZED NOT ACCEPTED.

PRESSURE GAUGE AND SWITCH ASSEMBLY

DETAIL	302
NOT TO SCALE	–

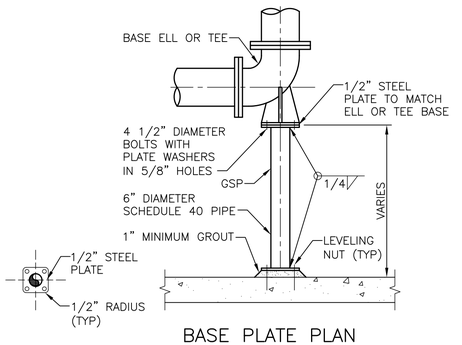

BASE PLATE PLAN

DETAIL	303
NOT TO SCALE	–

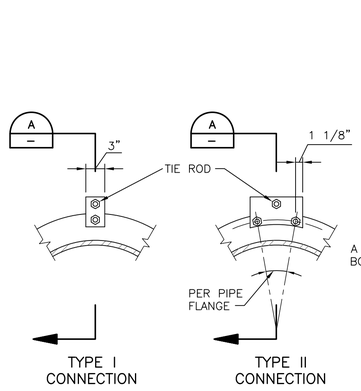

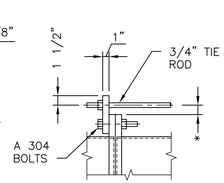

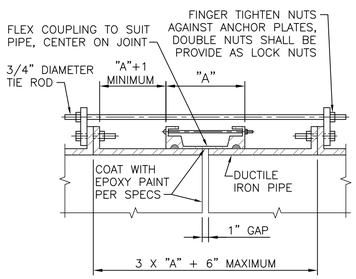

NOTES:

1. ALL EXPOSED FLEXIBLE COUPLINGS SHALL HAVE TIE RODS UNLESS SPECIFICALLY INDICATED OTHERWISE ON THE DRAWINGS.
2. PIPE THRUST SHALL BE BASED ON TEST PRESSURE.
3. PIPE THRUST = 0.7854 x D^2 x TEST PRESSURE, WHERE D IS PIPE OD.
4. MINIMUM TIE ROD YIELD 48,000 PSI.
5. FOR THRUSTS GREATER THAN 30,000 POUNDS, ADD ONE 3/4 INCH DIAMETER ROD FOR EVERY 6,000 POUNDS INCREASE IN THRUST.
6. CONTRACTOR MAY USE ONE INCH DIAMETER ROD FOR THRUSTS GREATER THAN 30,000 POUNDS. NUMBER OF ONE INCH RODS = NUMBER OF 3/4 INCH RODS x 0.5625. ROUND OFF TO THE NEXT LARGER NUMBER.
7. ALL ROD CONNECTIONS SHALL BE TYPE II FOR THRUSTS GREATER THAN 30,000 POUNDS.
8. GRIND ALL CORNERS SMOOTH.

* AS REQUIRED TO CLEAR FLEXIBLE COUPLING (1 1/2" MAXIMUM).

ROD SCHEDULE FOR DIP		
PIPE THRUST SEE NOTE 2	TYPE OF CONNECTION	NO RODS
0–6,000#	I	2
6,001–12,000#	II	2
12,001–18,000#	II	3
18,001–24,000#	II	4
24,001–30,000#	II	5

SECTION A – NOT TO SCALE

DUCTILE IRON PIPE FLEXIBLE COUPLING TIE DOWN

DETAIL	304
NOT TO SCALE	–

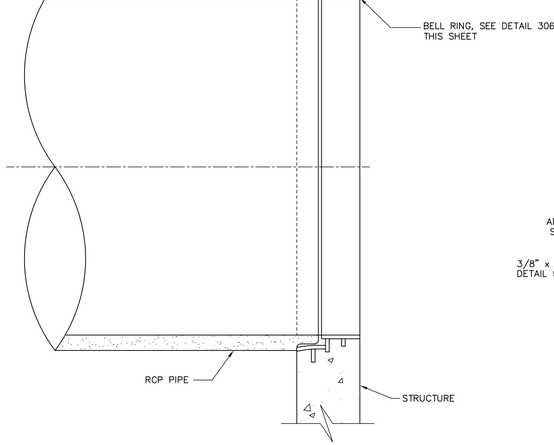

RCP FLEXIBLE CONNECTION AT WALL PENETRATION

DETAIL	305
NOT TO SCALE	–

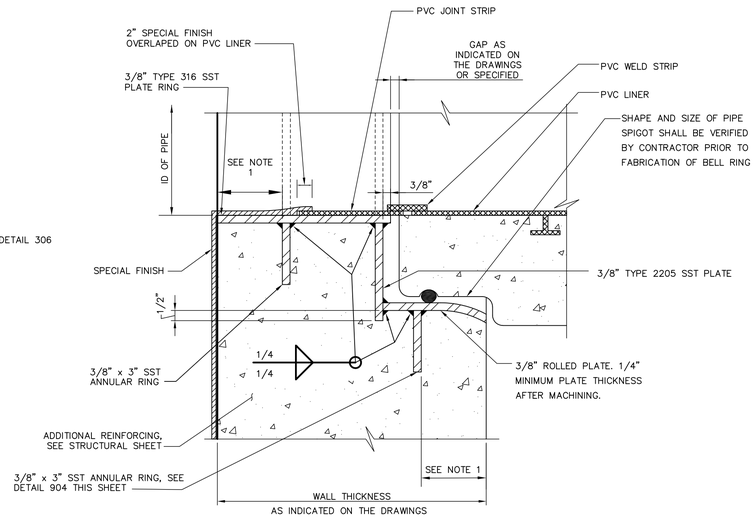

NOTES:

1. SEE STRUCTURAL DRAWING FOR REINFORCING AROUND OPENING TO DETERMINE REQUIRED DIMENSION.
2. INSTALL ANNULAR RINGS PARALLEL TO FACE OF WALL AFTER ACCOUNTING FOR SLOPE OF PIPE. INSTALL BELL RING INSERT PERPENDICULAR TO CENTERLINE OF PIPE.
3. GRIND SMOOTH ALL METAL EDGES AND ALL SURFACES IN PIPE SEATING AREA.
4. BELL RING SHALL HAVE SPIDER BRACING INSTALLED AT POINT OF MANUFACTURE.
5. BELL RING MATERIAL TO BE TYPE 316 SS.
6. CONTRACTOR TO COORDINATE WITH RCP MANUFACTURER ON REQUIRED CONNECTION.
7. STAINLESS STEEL BELL RING SHALL BE PREPARED FOR SPECIAL FINISH BY BLASTING TO 3-6 MIL PROFILE W/50-60 GRIT SANDPAPER
8. PVC LINER SHALL BE PREPARED FOR SPECIAL FINISH BY REMOVING ALL GLOSS WITH A 60 GRIT SANDPAPER AND CLEANING WITH SOLVENT

SST BELL RING INSERT FOR 24" DIA CONCRETE PIPE

DETAIL	306
NOT TO SCALE	–

1620 West Fountainhead Pkwy
Suite 501 85282
Tempe, Arizona
Phone: (480) 893-8860
Improving Arizona's Infrastructure Since 1942
WILSON ENGINEERS

CITY OF CHANDLER
RECLAIMED WATER INTERCONNECT FACILITY

TYPICAL DETAILS – 3

CITY PROJECT NO. WW1901.203
WILSON PROJECT NO. 21007

Design: HA	Drawn: AJC	Checked: SR
Date: 02/2022	Wilson Project No.: 21007	

Rev#	Date	Description	By

VERIFY SCALES
BAR IS ONE INCH ON ORIGINAL DRAWING
0 1"
IF NOT ONE INCH ON THIS SHEET, ADJUST SCALES ACCORDINGLY





Sheet No. M–7.03

AGENCY REVIEW

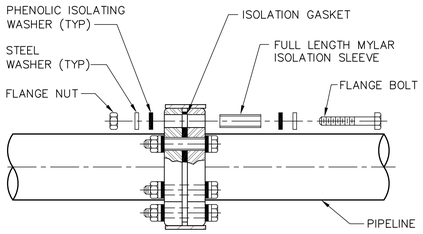

DIELECTRIC ISOLATING JOINT FLANGE KIT

DETAIL	401
NOT TO SCALE	–

ADJUSTABLE PIPE SADDLE SUPPORT SCHEDULE DIMENSIONS IN INCHES					
SIZE OF SUPPORTED PIPE**	PIPE SIZE "A"	PIPE SIZE "B"	"C"	D MINIMUM	D MAXIMUM
2–1/2*	2–1/2	1–1/2	12	8	13
3	2–1/2	1–1/2	12	8–1/2	13–1/2
3–1/2	2–1/2	1–1/2	12	8–1/2	13–1/2"
4	3	2–1/2	12	9–1/2	14
6	3	2–1/2	12	10–1/2	15–1/2
8	3	2–1/2	12	11–1/2	16–1/2
10	3	2–1/2	12	13–1/2	18–1/2
12	3	2–1/2	12	15	19–1/2
14	4	3	12	16–1/2	20–1/2
16	4	3	12	17–1/2	22–1/2
18	6	3–1/2	14	19–1/2	24
20	6	3–1/2	14	21	25–1/2
24	6	4	14	23–1/2	28–1/2
30	6	4	14	27	31–1/2
32	6	4	14	28–1/2	32–1/2
36	6	4	14	30–1/2	34–1/2

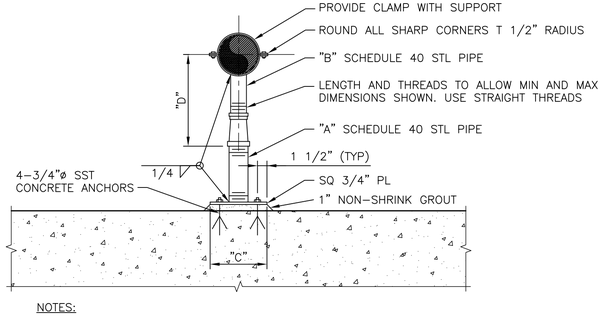

NOTES:

1. HOT DIP GALVANIZE AFTER FABRICATION.
2. * = USE 2–1/2" SUPPORTS FOR PIPES LESS THEN 2–1/2"ø.
3. ** = NOMINAL PIPE SIZE.

ADJUSTABLE PIPE SADDLE SUPPORT

DETAIL	404
NOT TO SCALE	–

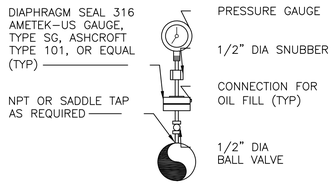

PRESSURE GAUGE ASSEMBLY

DETAIL	402
NOT TO SCALE	–

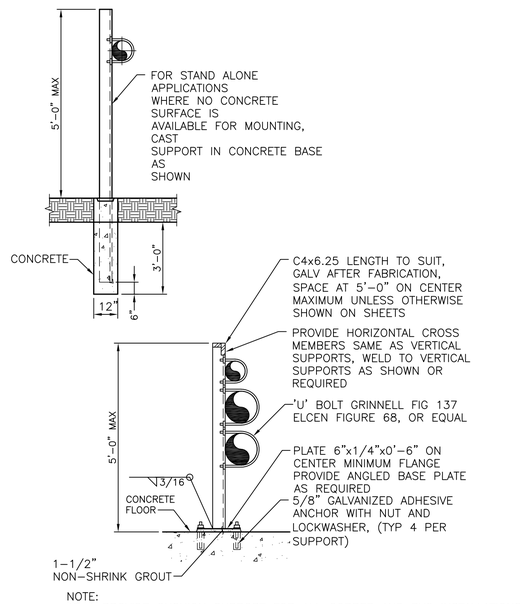

NOTE:
AB 1. PROVIDE CUSHION SUPPORT FOR ALL COPPER AND PVC INSTALLATIONS.

SINGLE AND MULTIPLE PIPE SUPPORT STANDS

DETAIL	405
SCALE: 3/8"=1'–0"	–

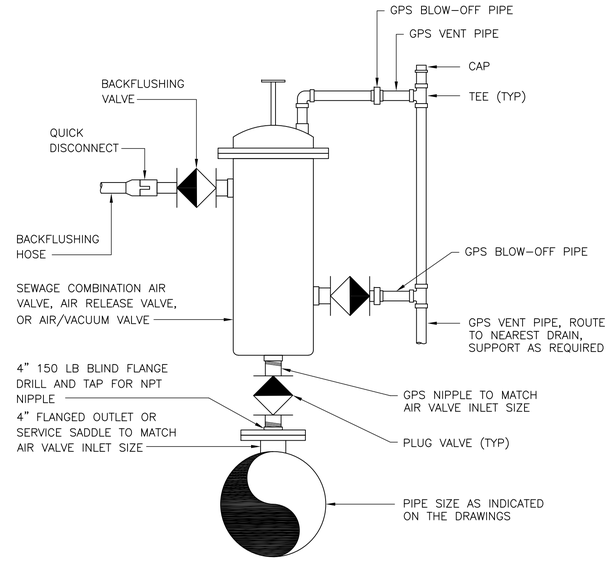

AIR VALVE 3" AND SMALLER VALVE ASSEMBLY

DETAIL	403
NOT TO SCALE	–

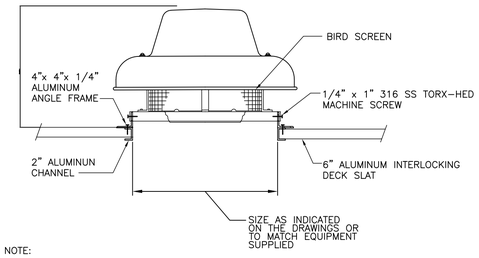

NOTE:

1. COORDINATE REQD HEIGHT ABOVE DECK WITH EQUIPMENT MFR.

EXHAUST VENT FOR ALUMINUM SLAT

DETAIL	405
NOT TO SCALE	–

WILSON ENGINEERS
1620 West Fountainhead Pkwy
Suite 501 85282
Tempe, Arizona
Phone: (480) 893–8860
Improving Arizona's Infrastructure Since 1942

CITY OF CHANDLER
RECLAIMED WATER INTERCONNECT FACILITY

TYPICAL DETAILS – 4

CITY PROJECT NO. WW1901.203
WILSON PROJECT NO. 21007

Design: HA	Drawn: AJC	Checked: SR
Date: 02/2022	Wilson Project No.: 21007	

Rev#	Date	Description	By

VERIFY SCALES
BAR IS ONE INCH ON ORIGINAL DRAWING
0 1"
IF NOT ONE INCH ON THIS SHEET, ADJUST SCALES ACCORDINGLY

Registered Professional Engineer
CERTIFICATE NO.
30185
UDAY K. GANDHE
Date Signed 02/28/2022
ARIZONA U. S. A.

Registered Professional Engineer
CERTIFICATE NO.
41008
SREERAM RENGARAJ
Date Signed 02/28/2022
ARIZONA U. S. A.

Sheet No. **M–7.04**

AGENCY REVIEW

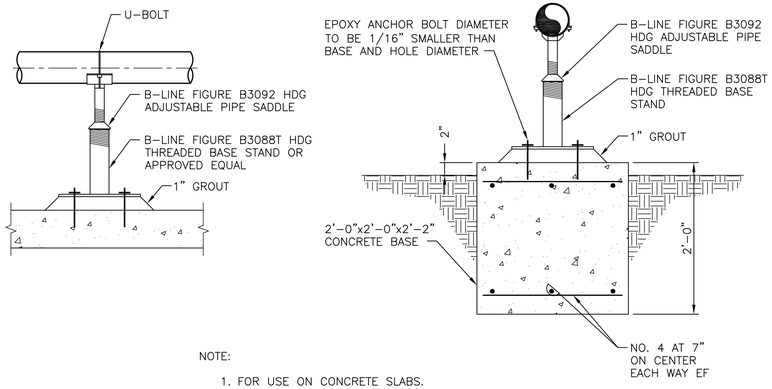

NOTE:

1. FOR USE ON CONCRETE SLABS.

ADJUSTABLE PIPE SUPPORT

DETAIL	501
NOT TO SCALE	–

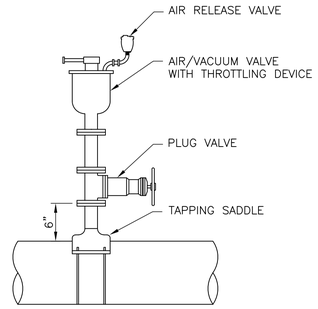

AIR AND VACUUM VALVE

DETAIL	502
NOT TO SCALE	–

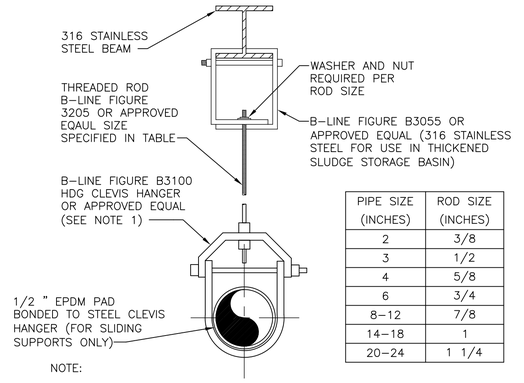

PIPE SIZE (INCHES)	ROD SIZE (INCHES)
2	3/8
3	1/2
4	5/8
6	3/4
8–12	7/8
14–18	1
20–24	1 1/4

NOTE:

1. FOR DUCTILE IRON PIPE USE B-LINE FIGURE B3102 AND FOR STAINLESS STEEL PIPE USE B-LINE FIGURE B3105 OR APPROVED EQUAL.

ATTACHMENT PIPE HANGER FOR BEAMS UP TO 24" DIAMETER

DETAIL	503
NOT TO SCALE	–

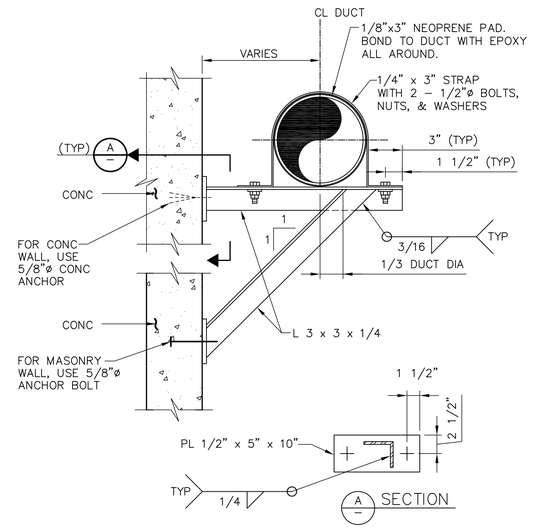

NOTES:

1. ALL METAL SHAPES SHALL BE TYPE 304 SST UNLESS OTHERWISE INDICATED ON THE DRAWINGS.
2. ALL BOLTS, NUTS, WASHERS, AND CONNECTIONS SHALL BE TYPE 304 SST.
3. SEE DRAWINGS FOR THE SIZE OF DUCT.
4. SHALL APPLY TO ALL RECTANGULAR DUCTS AND ALL ROUND DUCTS 18" AND LARGER.

WALL MOUNT SUPPORT

DETAIL	504
NOT TO SCALE	–

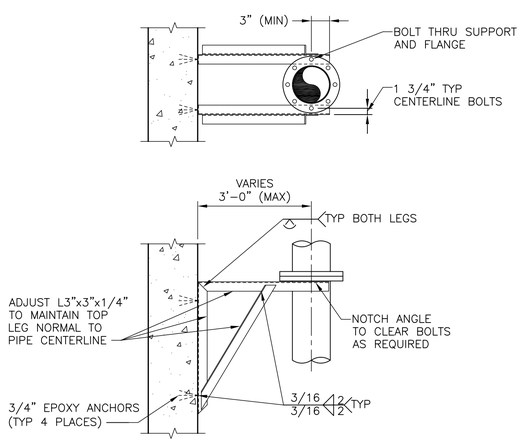

RISER PIPE SUPPORT (PIPE DIAMETER GREATER THAN 1'–0")

NOTES:

1. HOT–DIP GALVANIZE SUPPORT AFTER FABRICATION
2. 316 SS FOR SUBMERGED CONDITIONS (RAW WATER PUMP STATION WET WELL AND CHLORINE CONTACT BASIN)

DETAIL	505
NOT TO SCALE	–

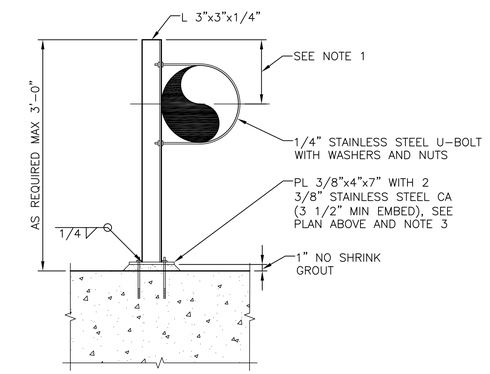

NOTES:

1. DIMENSION SHALL BE 1" CLEAR BEYOND EDGE OF NUT.
2. SUPPORT SHALL BE HOT DIP GALVANIZED OR FABRICATED FROM FRP WHEN INDICATED ON PLANS.
3. BASE PLATE CAN ALSO BE WELDED TO STEEL MEMBERS.

PIPE SUPPORT

DETAIL	506
NOT TO SCALE	–

1620 West Fountainhead Pkwy
Suite 501 85282
Tempe, Arizona
Phone: (480) 893-8860
Improving Arizona's Infrastructure Since 1942
WILSON ENGINEERS

CITY OF CHANDLER
RECLAIMED WATER INTERCONNECT FACILITY

TYPICAL DETAILS – 5

CITY PROJECT NO. WW1901.203
WILSON PROJECT NO. 21007

Design: HA	Drawn: AJC	Checked: SR
Date: 02/2022	Wilson Project No.: 21007	

Rev#	Date	Description	By

VERIFY SCALES
BAR IS ONE INCH ON ORIGINAL DRAWING
0 1"
IF NOT ONE INCH ON THIS SHEET, ADJUST SCALES ACCORDINGLY

Registered Professional Engineer – Certificate No. 30185 – Uday K. Gandhe – Date Signed 02/28/2022 – Arizona U.S.A.

Registered Professional Engineer – Certificate No. 41008 – Sreeram Rengaraj – Date Signed 02/28/2022 – Arizona U.S.A.

Sheet No. M–7.05

AGENCY REVIEW

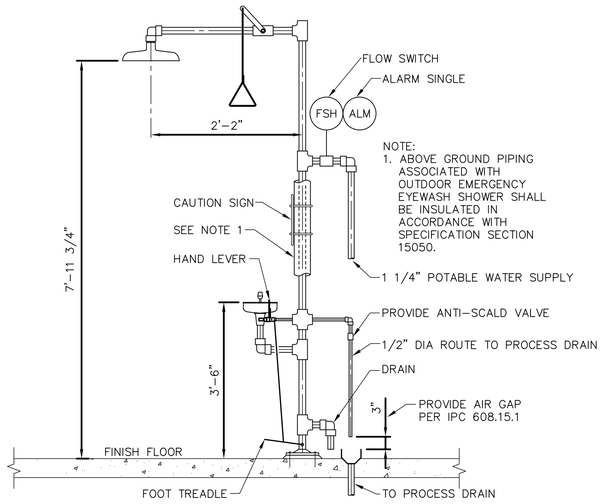

NOTE:

1. ABOVE GROUND SUPPLY PIPE IS INSULATED.
2. PROVIDE P-TRAP IF DRAIN CONNECTS TO SANITARY SEWER.

EMERGENCY EYEWASH/SHOWER STATION

DETAIL	601
NOT TO SCALE	–

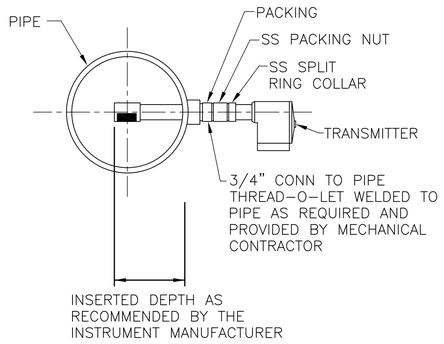

NOTES:

1. THERMAL MASS FLOW ELEMENT/PRESSURE TRANSMITTER ORIENTATION MAY DIFFER FROM THAT SHOWN. SEE MECHANICAL DRAWINGS FOR LOCATIONS AND ORIENTATION
2. ALL STRUCTURAL STEEL AND COMPONENTS SHALL BE 316 SS
3. ALL ANCHORING AND MOUNTING HARDWARE SHALL BE 316 SS

THERMAL MASS FLOWMETER AND PRESSURE TRANSMITTER MOUNTING

DETAIL	604
NOT TO SCALE	–

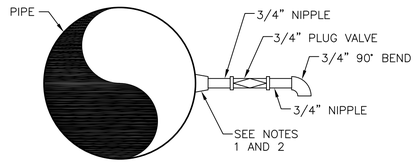

NOTES:

1. FOR DUCTILE IRON PIPE – DRILL AND TAP, USE BRASS NIPPLES AND BALL VALVE.
2. FOR STEEL – WELD 3/4" COUPLING FOR CONNECTION, USE STAINLESS STEEL NIPPLE AND STAINLESS STEEL VALVE.

SAMPLE CONNECTION

DETAIL	602
NOT TO SCALE	–

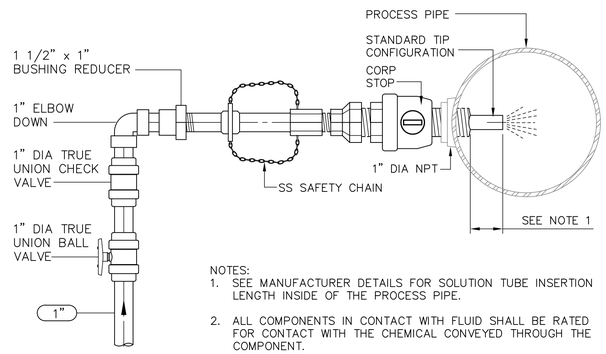

NOTES:

1. SEE MANUFACTURER DETAILS FOR SOLUTION TUBE INSERTION LENGTH INSIDE OF THE PROCESS PIPE.
2. ALL COMPONENTS IN CONTACT WITH FLUID SHALL BE RATED FOR CONTACT WITH THE CHEMICAL CONVEYED THROUGH THE COMPONENT.
3. PROVIDE SAF-T-FLO MODEL NO. EB-159-B-9-(LENGTH)-O-01 OR APPROVED EQUAL.

CHEMICAL INJECTION QUILL CONNECTION

DETAIL	605
NOT TO SCALE	–

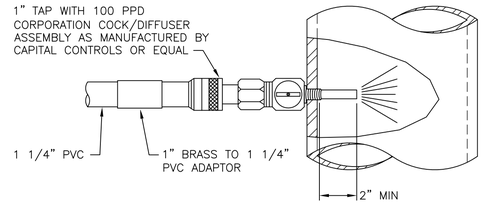

NOTE:

1. SOLUTION TUBE LENGTH SHOULD BE A MAXIMUM OF 1/3 THE INSIDE DIAMETER OF THE PIPE OR AS PER DRAWING.

CHLORINE DIFFUSER CONNECTION

DETAIL	603
NOT TO SCALE	–

WILSON ENGINEERS
1620 West Fountainhead Pkwy
Suite 501 85282
Tempe, Arizona
Phone: (480) 893-8860
Improving Arizona's Infrastructure Since 1942

CITY OF CHANDLER
RECLAIMED WATER INTERCONNECT FACILITY

TYPICAL DETAILS – 6

CITY PROJECT NO. WW1901.203
WILSON PROJECT NO. 21007

Design: HA	Drawn: AJC	Checked: SR
Date: 02/2022	Wilson Project No.: 21007	

Rev#	Date	Description	By

VERIFY SCALES
BAR IS ONE INCH ON ORIGINAL DRAWING
0 1"
IF NOT ONE INCH ON THIS SHEET, ADJUST SCALES ACCORDINGLY

Registered Professional Engineer (Civil) CERTIFICATE NO. 30185 UDAY K. GANDHE Date Signed 02/14/2022 ARIZONA U. S. A.

Registered Professional Engineer (Civil) CERTIFICATE NO. 41008 SREERAM RENGARAJ Date Signed 02/14/2022 ARIZONA U. S. A.

Sheet No. **M-7.06**

G:\PROJECT\21007\CADD\DESIGN\MECHANICAL\21007 M-7.06.DWG, 2/25/2022 2:24:01 PM, acantella, 1:2.1887

AGENCY REVIEW

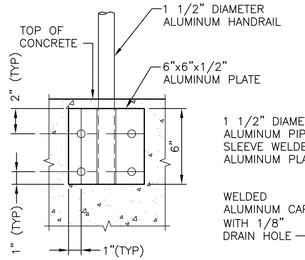

SIDE MOUNTED POST

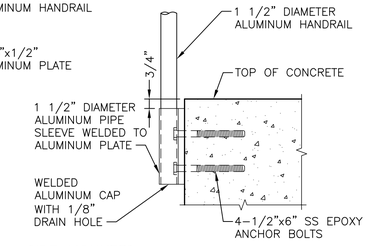

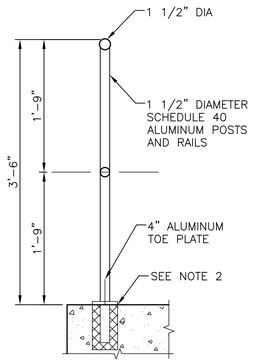

TWO-RAIL ALUMINUM GUARD

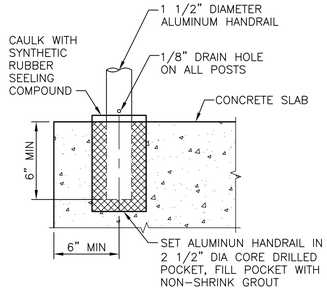

EMBEDDED POST

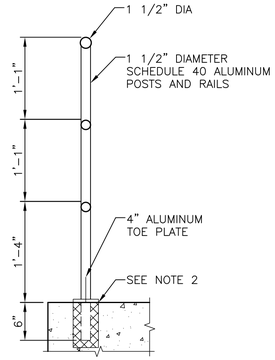

THREE-RAIL ALUMINUM GUARD

NOTES:

1. MAXIMUM POST SPACING 6'-0".
2. USE EMBEDDED OR SIDE MOUNT BASED ON LOCATIONS OF RAILINGS SHOWN ON PLANS.
3. USE EPOXY ANCHORS IN ALL EXISTING CONCRETE AND NEW CONCRETE.

ALUMINUM GUARDRAIL

DETAIL	701
NOT TO SCALE	–

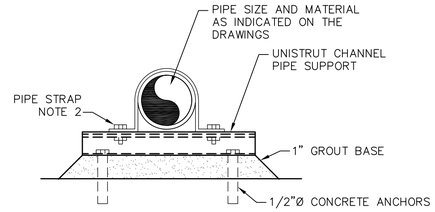

NOTE:

1. CHANNELS SHALL BE HOT DIPPED GALVANIZED UNLESS NOTED OTHERWISE.
2. BOLTS & CHANNEL NUTS SHALL BE STAINLESS STEEL HARDWARE AND NON-STAINLESS STEEL CHANNEL AND STRAPS UNLESS OTHERWISE NOTED.

FLOOR PIPE SUPPORT

DETAIL	702
NOT TO SCALE	–

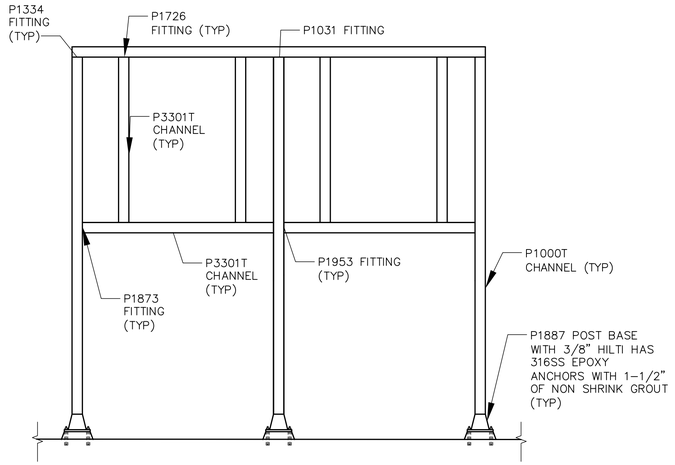

NOTES:

1. FRAMING SHALL BE UNISTRUT OR APPROVED EQUAL UNLESS OTHERWISE SPECIFIED.
2. FRAMING PIPE CLAMPS SHALL BE UNISTRUT 2558 OR APPROVED EQUAL UNLESS OTHERWISE SPECIFIED.

TYPICAL UNISTRUT PIPEWORK STAND DETAIL

DETAIL	703
NOT TO SCALE	–

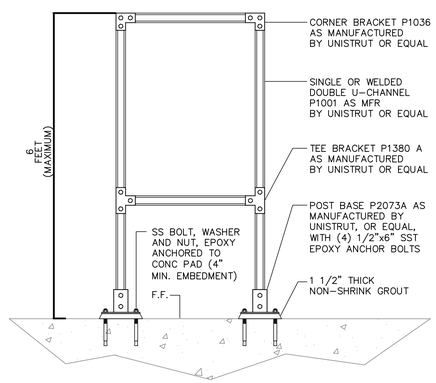

NOTES:

1. DO NOT ATTACH TO BUILDINGS.
2. IN CORROSIVE AREAS USE STAINLESS STEEL STRUT OR FRP.

EQUIPMENT UNISTRUT FRAME SUPPORT

DETAIL	704
NOT TO SCALE	–

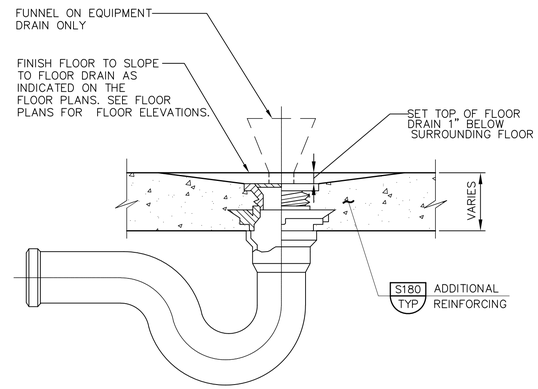

NOTE:

1. PROVIDE 12" RADIUS SLOPE TO EQUIPMENT DRAINS WHERE FLOOR DOES NOT SLOPE TO DRAIN.

FLOOR DRAIN OR EQUIPMENT DRAIN WITH TRAP

DETAIL	705
NOT TO SCALE	–

1620 West Fountainhead Pkwy
Suite 501 85282
Tempe, Arizona
Phone: (480) 893-8860
Improving Arizona's Infrastructure Since 1942
WILSON ENGINEERS

CITY OF CHANDLER
RECLAIMED WATER INTERCONNECT FACILITY

TYPICAL DETAILS - 7

CITY PROJECT NO. WW1901.203
WILSON PROJECT NO. 21007

Design: HA	Drawn: AJC	Checked: SR
Date: 02/2022	Wilson Project No.: 21007	

Rev#	Date	Description	By

VERIFY SCALES
BAR IS ONE INCH ON ORIGINAL DRAWING
0 1"
IF NOT ONE INCH ON THIS SHEET, ADJUST SCALES ACCORDINGLY

Registered Professional Engineer (Civil) CERTIFICATE NO. 30185 UDAY K. GANDHE Date Signed 02/18/2022 ARIZONA U.S.A.

Registered Professional Engineer (Civil) CERTIFICATE NO. 41008 SREERAM RENGARAJ Date Signed 02/18/2022 ARIZONA U.S.A.

Sheet No. M-7.07

AGENCY REVIEW

STRUCTURAL DESIGN PARAMETERS

1.01 DESCRIPTION:
- A. ALL CONSTRUCTION SHALL COMPLY WITH THE BUILDING CODE AND OTHER APPLICABLE CODES AND STANDARDS.

1.02 COORDINATION:
- A. BUILDING CODE: 2018 EDITION OF THE INTERNATIONAL BUILDING CODE (IBC 2018) AS ADOPTED AND AMENDED BY THE CITY OF CHANDLER.
- B. COMPLY WITH ACI 350-06 " CODE REQUIREMENTS FOR ENVIRONMENTAL ENGINEERING CONCRETE STRUCTURES."

1.03 QUALITY ASSURANCE:
- A. REFERENCE STANDARDS FOR DESIGN LOADS AND LOAD COMBINATIONS: BUILDING CODE, ASCE 7-16.

2.01 DESIGN CRITERIA:
- A. SUPERIMPOSED DEAD LOADS
  1. ROOF FRAMING = 25 PSF
- B. LIVE LOADS
  1. ROOF FRAMING = 20 PSF (MIN)
  2. STAIRS = 100 PSF
  3. HEAVY STORAGE AREAS = 250 PSF
  4. MAINTENANCE PLATFORMS = 150 PSF
- C. RISK CATEGORY III
- D. WIND LOAD PARAMETERS
  1. EXPOSURE CATEGORY = C
  2. BASIC DESIGN WIND SPEED = 108 MPH
  3. ALLOWABLE STRESS DESIGN WIND SPEED = 85 MPH
  4. INTERNAL PRESSURE COEFFICIENTS (GC(PI)) = ± 0.18
- E. SEISMIC LOAD PARAMETERS
  1. STRUCTURAL RISK CATEGORY = III
  2. SEISMIC IMPORTANCE FACTOR, Ie = 1.25
  3. SPECTRAL RESPONSE ACCELERATION PARAMETERS:
     - i. Ss = 0.178 g
     - ii. S1 = 0.065 g
     - iii. S(DS) = 0.189 g
     - iv. S(D1) = 0.103 g
  4. SITE CLASS = D
  5. SEISMIC DESIGN CATEGORY = B

GENERAL STRUCTURAL NOTES

1.01 DESCRIPTION:
- A. THE STRUCTURAL DRAWINGS SHOW THE COMPLETED PROJECT. THEY DO NOT INCLUDE COMPONENTS THAT MAY BE NECESSARY FOR CONSTRUCTION SAFETY. THE CONTRACTOR IS RESPONSIBLE FOR SAFETY IN AND AROUND THE JOB SITE DURING CONSTRUCTION.
- B. GENERAL NOTES AND TYPICAL DETAILS APPLY EVEN THOUGH NOT SPECIFICALLY REFERENCED ON STRUCTURAL DRAWINGS, UNLESS NOTED OTHERWISE.

1.02 COORDINATION:
- A. DETAILS ON THE STRUCTURAL DRAWINGS ARE TYPICAL. VERIFY ALL SITE DIMENSIONS, ELEVATIONS, AND SLOPES WITH THE ARCHITECTURAL, CIVIL, AND GRADING DRAWINGS. STRUCTURAL DIMENSIONS CONTROLLED BY OR RELATED TO MECHANICAL OR ELECTRICAL EQUIPMENT SHALL ALSO BE VERIFIED BY THE CONTRACTOR PRIOR TO CONSTRUCTION.
- B. MECHANICAL AND ELECTRICAL EQUIPMENT SUPPORTS, ANCHORAGES, OPENINGS, RECESSES AND REVEALS NOT SHOWN ON THE STRUCTURAL DRAWINGS BUT REQUIRED BY OTHER CONTRACT DRAWINGS SHALL BE PROVIDED PRIOR TO PLACING CONCRETE. STRUCTURAL DRAWINGS SHALL BE USED IN COORDINATION WITH MECHANICAL, ELECTRICAL, AND CIVIL DRAWINGS AND SHOP DRAWINGS PROVIDED BY MANUFACTURERS OF EQUIPMENT.

2.01 SHOP ACTIONS:
- A. VERIFY ALL NEW AND EXISTING DIMENSIONS AND CONDITIONS PRIOR TO STARTING WORK. NOTIFY THE ENGINEER OF ANY DISCREPANCIES OR INCONSISTENCIES.

3.01 FIELD EXECUTION:
- A. STRUCTURES HAVE BEEN DESIGNED FOR OPERATIONAL LOADS ON THE COMPLETED STRUCTURES. DURING CONSTRUCTION, THE STRUCTURES SHALL BE PROTECTED BY BRACING AND BALANCING WHEREVER EXCESSIVE CONSTRUCTION LOADS MAY OCCUR.

SPECIAL INSPECTION

1.01 DESCRIPTION:
- A. THE OWNER OR THE REGISTERED DESIGN PROFESSIONAL ACTING AS THE OWNER'S AGENT SHALL EMPLOY ONE OR MORE SPECIAL STRUCTURAL INSPECTORS IN ACCORDANCE WITH THE APPLICABLE BUILDING CODE.

1.02 CONTRACTOR'S RESPONSIBILITIES:
- A. IT IS THE CONTRACTOR'S RESPONSIBILITY TO INSPECT ALL STRUCTURAL WORK FOR CONFORMANCE WITH THE CONTRACT DOCUMENTS. ANY STRUCTURAL INSPECTION PROVIDED BY OTHERS DOES NOT RELIEVE HIM OF HIS RESPONSIBILITY. ANY STRUCTURAL DEVIATIONS FROM THE CONTRACT DOCUMENTS THAT ARE FOUND AT A LATER DATE AND ARE DECLARED TO BE SIGNIFICANT BY THE STRUCTURAL ENGINEER SHALL BE CORRECTED BY THE CONTRACTOR AT HIS OWN EXPENSE AND WITH ALL DISPATCH.
- B. THE STRUCTURAL INSPECTOR IS NOT AUTHORIZED TO STOP OR DELAY THE WORK. IF THE CONTRACTOR ELECTS TO CONTINUE WITH CERTAIN WORK AFTER BEING NOTIFIED BY THE STRUCTURAL INSPECTOR THAT SUCH WORK IS UNACCEPTABLE, HE DOES SO AT HIS OWN RESPONSIBILITY AND RISKS CORRECTING THE WORK AT A LESS OPPORTUNE TIME.
- C. THE CONTRACTOR IS RESPONSIBLE FOR PROVIDING ADEQUATE FACILITIES FOR THE STRUCTURAL INSPECTOR TO INSPECT THE WORK SAFELY AND EFFICIENTLY. TWENTY-FOUR (24) HOUR NOTICE IS REQUIRED FOR INSPECTION.
- D. WORK MUST BE COMPLETED AT TIME OF INSPECTION. CONTRACTOR SHALL BEAR THE EXPENSE OF ANY ADDITIONAL INSPECTION THAT MAY OCCUR BECAUSE OF INCOMPLETE OR INCORRECT WORK.

1.03 INSPECTOR'S RESPONSIBILITIES:
- A. THE STRUCTURAL INSPECTOR IS NOT INSPECTING FOR ANY OSHA COMPLIANCE OR FOR ANY TEMPORARY CONSTRUCTION, SUCH AS BRACING.
- B. THE STRUCTURAL INSPECTOR IS NOT AUTHORIZED TO DIRECT OR APPROVE ANY CHANGES FROM THE CONTRACT DOCUMENTS. IF THE CONTRACTOR WISHES TO QUESTION THE STRUCTURAL INSPECTOR'S INTERPRETATION OF THE CONTRACT DOCUMENTS, HE MAY DO SO DIRECTLY WITH THE STRUCTURAL ENGINEER.

2.01 SHOP ACTIONS:
- A. SHOP FABRICATION WORK IS SUBJECT TO SPECIAL INSPECTION UNLESS THE FABRICATOR IS REGISTERED AND APPROVED TO PERFORM WORK WITHOUT SPECIAL INSPECTION.

3.01 REQUIRED VERIFICATION AND INSPECTIONS
- A. THE FOLLOWING ITEMS REQUIRE SPECIAL INSPECTION.

INSPECTION OF SOILS (RE:2018 IBC TABLE 1705.6)

INSPECTION ITEM	FREQUENCY OF INSPECTION
1. SOIL STABILITY, PREPARATION AND EXCAVATION	PERIODIC
2. MATERIALS USED AND PLACEMENT	CONTINUOUS

INSPECTION OF STEEL CONSTRUCTION (RE:AISC 360-16 CHAPTER N SECTION N.5, N5.4-1, N5.4-2 N5.6-1, N5.6-2, N5.6-3, N6)

INSPECTION ITEM	FREQUENCY OF INSPECTION
A. WELDING OF STRUCTURAL STEEL:	
1. COMPLETE AND PARTIAL PENETRATION GROOVE WELDS	CONTINUOUS
2. MULTI-PASS FILLET WELDS	CONTINUOUS
3. SINGLE-PASS FILLET WELDS > 5/16"	CONTINUOUS
4. SINGLE-PASS FILLET WELDS < 5/16"	PERIODIC
B. STRUCTURAL STEEL FRAMING:	CONTINUOUS
1. COMPLIANCE WITH CONSTRUCTION DOCUMENT DETAILS AND SPECIFICATIONS	PERIODIC
2. MATERIALS INDENTIFICATION	PERIODIC

INSPECTION OF STEEL CONSTRUCTION OTHER THAN STRUCTURAL (RE:2018 IBC 1705.2)

INSPECTION ITEM	FREQUENCY OF INSPECTION
A. MATERIAL VERIFICATION OF COLD-FORMED STEEL DECK:	
1. IDENTIFICATION MARKINGS TO CONFORM TO ATSM STANDARDS SPECIFIED IN THE APPROVED CONSTRUCTION DOCUMENTS	PERIODIC
2. MANUFACTURER'S CERTIFIED TEST REPORTS	PERIODIC
B. INSPECTION OF WELDING AND/OR OTHER FORMS OF ATTACHMENT OF COLD FORMED STEEL DECK:	
1. FLOOR AND ROOF DECK WELDS OR OTHER ATTACHMENT	PERIODIC

INSPECTION OF CONCRETE CONSTRUCTION (RE:2018 IBC TABLE 1705.3)

INSPECTION ITEM	FREQUENCY OF INSPECTION
A. STRUCTURAL CAST-IN-PLACE CONCRETE:	
1. REINFORCING STEEL MATERIALS AND PLACEMENT	PERIODIC
2. BOLTS INSTALLED IN CONCRETE PRIOR TO AND DURING CONCRETE PLACEMENT	CONTINUOUS
3. VERIFY USE OF REQUIRED MIX DESIGN	PERIODIC
4. SAMPLING OF FRESH CONCRETE	CONTINUOUS
5. CONCRETE AND SHOTCRETE PLACEMENT TECHNIQUE	CONTINUOUS
6. MAINTENANCE OF SPECIFIED CURING TEMPERATURE AND TECHNIQUES	PERIODIC
7. FORMWORK FOR SHAPE, LOCATION, AND DIMENSIONS	PERIODIC
B. PRECAST CONCRETE:	
1. ERECTION OF PRECAST CONCRETE MEMBERS	PERIODIC
2. CONNECTION OF PRECAST MEMBERS	PERIODIC
C. REINFORCING STEEL:	
1. VERIFICATION OF WELDABILITY OF REINFORCING STEEL OTHER THAN ASTM A706	PERIODIC
2. REINFORCING STEEL RESISTING FLEXURAL AND AXIAL FORCES IN INTERMEDIATE AND SPECIAL MOMENT FRAMES, AND BOUNDARY ELEMENTS OF SPECIAL STRUCTURAL WALLS OF CONCRETE AND SHEAR REINFORCEMENT	CONTINUOUS
3. SHEAR REINFORCEMENT	CONTINUOUS
4. OTHER REINFORCING STEEL	PERIODIC

INSPECTION OF LEVEL C MASONRY CONSTRUCTION (RE: TMS 402/602-16 TABLES 3 AND 4)

INSPECTION ITEM	FREQUENCY OF INSPECTION
A. STRUCTURAL REINFORCED MASONRY:	
1. PROPORTIONS OF SITE-PREPARED MORTAR	PERIODIC
2. PLACEMENT OF MASONRY UNITS AND CONSTRUCTION OF MORTAR JOINTS	PERIODIC
3. LOCATION/PLACEMENT OF REINFORCEMENT, CONNECTORS, AND ANCHORAGES	CONTINUOUS
4. SIZE AND LOCATION OF STRUCTURAL ELEMENTS	PERIODIC
5. TYPE, SIZE, AND LOCATION OF ANCHORS INCLUDING ANCHORAGE OF MASONRY TO STRUCTURAL MEMBERS, FRAMES OR OTHER CONSTRUCTION	CONTINUOUS
6. REINFORCEMENT SIZE, GRADE, AND TYPE	PERIODIC
7. WELDING OF REINFORCING BARS	CONTINUOUS
8. PREPARATION, CONSTRUCTION AND PROTECTION OF MASONRY DURING COLD WEATHER OR HOT WEATHER	PERIODIC
9. GROUT SPACE IS CLEAN	CONTINUOUS
10. GROUT PLACEMENT	CONTINUOUS
11. OBSERVE PREPARATION OF REQUIRED GROUT SPECIMENS, MORTAR SPECIMENS, AND/OR PRISMS	CONTINUOUS
12. VERIFY COMPLIANCE WITH THE REQUIRED INSPECTION PROVISIONS OF THE CONSTRUCTION DOCUMENTS AND THE APPROVED SUBMITTALS	PERIODIC

INSPECTION OF POST-INSTALLED ANCHORS AND DOWELS (RE: PRODUCT ICC-ES EVALUATION REPORT)

INSPECTION ITEM	FREQUENCY OF INSPECTION
A. ADHESIVE ANCHORS AND REINFORCEMENT DOWELS:	
1. VERIFY DRILL BIT TYPE AND SIZE	CONTINUOUS
2. HOLE DEPTH AND CLEANING PROCEDURE	CONTINUOUS
3. PRODUCT DESCRIPTION INCLUDING NAME, ROD TYPE, DIAMETER, AND LENGTH	CONTINUOUS
4. ADHESIVE EXPIRATION DATE	CONTINUOUS
5. PROPER INSTALLATION TECHNIQUE FOR ADHESIVE ANCHORS	CONTINUOUS

1. "PERIODIC" SPECIAL INSPECTION: THE PART-TIME OR INTERMITTENT OBSERVATION OF WORK REQUIRING SPECIAL INSPECTION BY AN APPROVED SPECIAL INSPECTOR WHO IS PRESENT IN THE AREA WHERE THE WORK HAS BEEN OR IS BEING PERFORMED AND AT THE COMPLETION OF WORK. 2018 IBC CHAPTER 2 "SPECIAL INSPECTIONS"
2. "CONTINUOUS" SPECIAL INSPECTION - THE FULL-TIME OBSERVATION OF WORK REQUIRING SPECIAL INSPECTION BY AN APPROVED SPECIAL INSPECTOR WHO IS PRESENT IN THE AREA WHERE THE WORK IS BEING PERFORMED. 2018 IBC CHAPTER 2 "SPECIAL INSPECTIONS"
3. ITEMS NOT SHOWN MAY REQUIRE CONTINUOUS OR PERIODIC SPECIAL STRUCTURAL INSPECTION AT THE DISCRETION OF THE ENGINEER OF RECORD. ITEMS LISTED MAY REQUIRE ALTERNATE FREQUENCIES OF INSPECTION OTHER THAN SHOWN ABOVE UNDER DIRECTION OF THE ENGINEER OF RECORD.
4. WELDING OF REINFORCING STEEL NOT ACCEPTABLE UNLESS DIRECTED BY THE ENGINEER OF RECORD.
5. VERIFY SOILS INSPECTION REQUIREMENTS WITH PROJECT SOILS ENGINEER/CONSULTANT AS OUTLINED IN SOILS REPORT AND PROJECT SPECIFICATIONS.

SHOP DRAWINGS

1.01 DESCRIPTION:
- A. SHOP DRAWINGS ARE DETAILED DRAWINGS OR OTHER INFORMATION CREATED TO DESCRIBE PRODUCTS OR PARTS OF THE WORK TO BE INSTALLED.
- B. SEE OTHER SECTIONS OF CONTRACT DOCUMENTS INCLUDING NOTES, PLANS, SECTIONS, AND DETAILS, AND SPECIFICATIONS FOR DESCRIPTIONS ABOUT WORK, PRODUCTS, AND DATA REQUIRED FOR SUBMITTALS.

1.02 COORDINATION:
- A. ELEMENTS REQUIRED TO BE SHOWN IN THE SHOP DRAWINGS SHALL BE REDRAWN BY THE PARTY PREPARING THE SHOP DRAWINGS. SHOP DRAWINGS COPIED FROM THE CONTRACT STRUCTURAL DRAWINGS WILL BE REJECTED.
- B. THE PROGRAM/PROJECT MANAGER WILL REVIEW SHOP DRAWINGS FOR COMPLIANCE WITH THE GENERAL DESIGN INTENT OF THE STRUCTURE AND REQUIREMENTS OF THE CONTRACT DOCUMENTS.
- C. IF A SHOP DRAWING OR OTHER SUBMITTAL CONTAINS VARIATIONS FROM THE CONTRACT DRAWINGS, NOTIFY THE PROGRAM/PROJECT MANAGER IN WRITING DESCRIBING THE EXTENT AND REASON FOR THE VARIATION, AND CLEARLY IDENTIFY ALL ITEMS INVOLVED. REVIEW OF VARIATIONS DOES NOT GUARANTEE THAT THE VARIATIONS WILL BE ACCEPTABLE.
- D. RE-SUBMITTED SHEETS SHALL CLEARLY IDENTIFY ADDED OR CORRECTED INFORMATION AND THE ITEMS INVOLVED BY CLOUDING AROUND ADDED OR CHANGED INFORMATION.

1.03 QUALITY ASSURANCE:
- A. BEFORE SUBMITTING A SHOP DRAWING OR ANY RELATED MATERIAL FOR REVIEW, THE CONTRACTOR SHALL REVIEW, APPROVE, AND SO STAMP EACH SUBMISSION FOR CONFORMANCE WITH MEANS, METHODS, TECHNIQUES, SEQUENCES, AND OPERATIONS OF CONSTRUCTION, AND WITH SAFETY PRECAUTIONS AND PROGRAMS INCIDENTAL THERETO, ALL OF WHICH ARE THE SOLE RESPONSIBILITY OF THE CONTRACTOR.
- B. IT IS THE CONTRACTOR'S RESPONSIBILITY TO CHECK SHOP DRAWINGS, AND COORDINATE SUBMITTAL INFORMATION AND CONTRACT INTERFACES PRIOR TO SUBMITTING TO THE PROGRAM/PROJECT MANAGER.
- C. SHOP DRAWINGS WILL BE RETURNED FOR RE-SUBMITTAL IF A CURSORY REVIEW SHOWS MAJOR ERRORS WHICH SHOULD HAVE BEEN FOUND BY THE CONTRACTOR'S CHECKING. MATERIAL NOT CALLED FOR OR WHICH HAS NOT BEEN APPROVED BY THE CONTRACTOR AND BEAR THEIR STAMP WILL BE RETURNED WITHOUT COMMENT.
- D. WORK DONE PRIOR TO OR WITHOUT SHOP DRAWING REVIEW AND APPROVAL BY THE PROGRAM/PROJECT MANAGER IS PERFORMED AT THE CONTRACTOR'S OWN RISK AND RESPONSIBILITY.
- E. DIMENSION CHECKING AND CHECKING OF DESIGN CHANGES PROPOSED BY THE CONTRACTOR WITHOUT PRIOR CONSULTATION WITH THE ENGINEER SHALL BE CHECKED ONLY IF THE CONTRACTOR WISHES THEM TO BE CHECKED AT THEIR OWN COST.
- F. ENGINEERING SUBMITTED FOR REVIEW SHALL BE APPROPRIATELY SEALED. FULL RESPONSIBILITY FOR SUCH ENGINEERING RESTS WITH THE PERSON SEALING THE DESIGN.

1620 West Fountainhead Pkwy
Suite 501
Tempe, Arizona 85282
Phone: (480) 893-8860

Improving Arizona's Infrastructure Since 1942

WILSON ENGINEERS

CITY OF CHANDLER
WATER RECLAMATION FACILITY
STRUCTURAL

GENERAL STRUCTURAL NOTES 1

CITY PROJECT NO.WW1901.203
WILSON PROJECT NO. 21007

Design: SJN	Drawn: MWK	Checked: TFW		
Date: 02/2022	Wilson Project No. 21007			
Rev#	Date	Description		By

VERIFY SCALES
BAR IS ONE INCH ON ORIGINAL DRAWING
0 1"
IF NOT ONE INCH ON THIS SHEET, ADJUST SCALES ACCORDINGLY

Registered Professional Engineer
CERTIFICATE NO.
35234
TIM F. WONG
Date Signed 2/24/2022
ARIZONA, U.S.A.

GANNETT FLEMING

Sheet No. S-1

AGENCY REVIEW

DEFERRED SUBMITTALS

1.01 DESCRIPTION:
- A. DEFERRED SUBMITTALS ARE THOSE PORTIONS OF THE DESIGN THAT ARE NOT SUBMITTED AT THE TIME OF PERMIT APPLICATION BUT WILL BE SUBMITTED TO THE BUILDING OFFICIAL WITHIN A SPECIFIC TIME. DEFERRAL OF ANY SUBMITTAL ITEMS IS SUBJECT TO APPROVAL BY THE BUILDING OFFICIAL.
- B. THE CONTRACTOR SHALL INCLUDE IN HIS BID ALL TIME AND EFFORT REQUIRED TO OBTAIN A BUILDING DEPARTMENT REVIEW AND PERMIT FOR DEFERRED STRUCTURAL ITEMS. THE CONTRACTOR SHALL ALSO INCLUDE IN HIS BID ALL TIME AND EFFORT TO SECURE CALCULATIONS AND DRAWINGS APPROPRIATELY SEALED BY AN ENGINEER FOR DEFERRED ITEMS REQUIRING DESIGN.

1.02 SUBMITTALS:
- A. DOCUMENTS FOR DEFERRED SUBMITTALS SHALL BE SUBMITTED TO THE DESIGN PROFESSIONAL IN RESPONSIBLE CHARGE FOR REVIEW PRIOR TO THEM BEING FORWARDED TO THE BUILDING OFFICIAL. THE DESIGN PROFESSIONAL WILL REVIEW THE SUBMITTAL DOCUMENTS FOR GENERAL CONFORMANCE WITH THE DESIGN INTENT FOR THE STRUCTURE OR FACILITY.
- B. SUBMITTALS OF ENGINEERING DESIGN PROVIDED BY OTHERS SHALL HAVE DRAWINGS AND CALCULATIONS APPROPRIATELY SIGNED AND SEALED BY AN ENGINEER REGISTERED IN THE STATE OF ARIZONA.
- C. IN ALL CASES THE COMPONENTS MUST BE DESIGNED AND MANUFACTURED BY A FABRICATOR APPROVED BY THE GOVERNING BODY HAVING JURISDICTION.
- D. SUBMITTALS SHALL INCLUDE KEY PLANS, SECTIONS, AND DETAILS REQUIRED FOR CONSTRUCTION.

2.01 SHOP FABRICATION:
- A. THE FOLLOWING ITEMS ARE DEFERRED SUBMITTAL ITEMS.
  1. MISCELLANEOUS PIPE SUPPORTS
  2. METAL STAIRS, HANDRAILS AND GUARDRAILS
  3. ALL GRATING, ALUMINUM COVERS & CHECKER PLATES
  4. ACCESS HATCHES

3.01 FIELD EXECUTION:
- A. FIELD INSTALLATION OF DEFERRED STRUCTURAL ITEMS IS SUBJECT TO SPECIAL STRUCTURAL INSPECTION.
- B. SHOP FABRICATION OF DEFERRED STRUCTURAL ITEMS MAY ALSO BE SUBJECT TO SPECIAL STRUCTURAL INSPECTION, UNLESS NOTED OTHERWISE.

FOUNDATIONS

1.01 DESCRIPTION:
- A. PERFORM ALL WORK IN ACCORDANCE WITH THE BUILDING CODE SOILS AND FOUNDATION REQUIREMENTS, CONTRACT DOCUMENTS, AND GEOTECHNICAL INVESTIGATION REPORT.

1.02 COORDINATION:
- A. PERFORM ALL WORK IN ACCORDANCE WITH THE SOILS REPORT BY R.A.M.M. & ASSOCIATES, PROJECT NO. G27733 DATED FEBUARY 3, 2022
- B. FOUNDATION DESIGN IS BASED ON THE FOLLOWING PROPERTIES:
  1. SOIL CLASSIFICATION = CLAYEY TO SILTY SAND
  2. VERTICAL (GRAVITY) NEW BEARING PRESSURE = 1500 PSF AT 1'-6" BELOW NATURAL GRADE; 2000 PSI AT 2'-0" BELOW NATURAL GRADE; 3000 PSI AT 3'-0" BELOW NATURAL GRADE.
  3. LATERAL AT-REST PRESSURES = 55 PSF/FT
  4. LATERAL ACTIVE PRESSURES = 35 PSF/FT
  5. LATERAL PASSIVE PRESSURES = 250 PSF/FT
  6. BASE FRICTION COEFFICIENT = 0.45
- C. UNLESS OTHERWISE SHOWN, ON ALL STRUCTURAL DRAWINGS THE FINISH GRADE AROUND STRUCTURES IS SHOWN THUS ⩘⩘⩘ INDICATING EITHER GROUND SURFACE, TOP OF CONCRETE SLAB, OR A.C. PAVEMENT. FOR DETAILS OR FINISH SURFACES, SEE CIVIL SITE DRAWINGS. PROVIDE CONCRETE ENCASEMENT FOR ALL UNDERGROUND PIPES BENEATH STRUCTURES.

2.01 PLACE FOUNDATION CONCRETE ONLY ON UNDISTURBED NATIVE SOILS FOR DEPTHS GREATER THAN 10'-0" DEEP AND AT LEAST 2'-0" BELOW THE LOWEST ADJACENT FINISHED GRADE, WHICHEVER IS LOWER. FOR AT-GRADE STRUCTURES, PLACE FOUNDATIONS ON CLEAN, FIRM BEARING MATERIAL FOR SPREAD FOUNDATIONS AT LEAST 1'-6" BELOW LOWEST ADJACENT FINISHED GRADE AND MAT FOUNDATIONS FOUNDED ON AT LEAST 1'-0" BELOW FINISHED GRADE. VERIFY THE SUITABILITY OF THE BEARING MATERIAL WITH THE SOILS CONSULTANT BEFORE PLACING FOUNDATIONS.

2.02 CONTROLLED LOW STRENGTH MATERIAL (CLSM):
- A. CLSM SHALL BE USED AS AN UNREINFORCED FILL MATERIAL TO REPLACE EXCAVATED SOIL INCLUDING UNDER STRUCTURE FOUNDATIONS AND AS SHOWN ON DRAWINGS.
- B. PROPORTIONS: CEMENT CONTENT = 94 LBS/CU YD (+/- 5%); SLUMP = 7 INCHES (+/- 1 INCH); COMPRESSIVE STRENGTH AT 28 DAYS = 75 PSI (+/-25 PSI/ 10 PSI).

3.01 PLACEMENT:
- A. PLACE DOWELS AND ANCHOR BOLTS BEFORE POURING CONCRETE. USE TEMPLATES TO ENSURE PROPER PLACEMENT.
- B. CENTER FOUNDATIONS UNDER COLUMNS AND WALLS UNLESS NOTED OTHERWISE.

CONCRETE

1.01 DESCRIPTION:
- A. THIS SECTION INCLUDES REQUIREMENTS FOR MATERIALS, PROPORTIONING, AND INSTALLATION OF CONCRETE (RE: ACI 301-05, ACI 350-06). PROVIDE NORMAL WEIGHT CONCRETE (144PCF WET).

1.02 COORDINATION:
- A. INSTALL JOINTS, WATERSTOPS, AND SEALANTS IN CONCRETE WHERE APPLICABLE IN ACCORDANCE WITH OTHER SECTIONS OF THE GENERAL STRUCTURAL NOTES, PLANS, AND PROJECT SPECIFICATIONS.
- B. PATCHING OF CONCRETE SHALL BE CONSIDERED STRUCTURAL. SEE STRUCTURAL CONCRETE REPAIR SECTION OF THE GENERAL STRUCTURAL NOTES.
- C. MECHANICAL AND ELECTRICAL EQUIPMENT SUPPORTS, ANCHORAGES, OPENINGS, RECESSES AND REVEALS NOT SHOWN ON THE STRUCTURAL DRAWINGS BUT REQUIRED BY OTHER CONTRACT DRAWINGS SHALL BE PROVIDED PRIOR TO PLACING CONCRETE.

1.03 SUBMITTALS:
- A. SUBMIT THE FOLLOWING TO THE ENGINEER FOR REVIEW PRIOR TO PLACEMENT OF CONCRETE. INDICATE FOR EACH MIX DESIGN THE LOCATION ON THE PROJECT WHERE IT WILL BE USED. PREPARE OR CERTIFY SUBMITTALS TO CONFORM TO ACI CODES BY AN INDEPENDENT TESTING LABORATORY PRIORY TO SUBMITTING TO ENGINEER.
  1. CONCRETE MIX PROPORTIONS AND CHARACTERISTICS
  2. COMPRESSIVE STRENGTH TESTING DATA
  3. MATERIALS DATA FOR CEMENTITIOUS MATERIALS, AGGREGATES, ADMIXTURES, AND WATER AND ICE.
  4. JOINT LOCATIONS IF DIFFERENT THAN SHOWN ON DRAWINGS.

1.04 QUALITY ASSURANCE:
- A. PRODUCE AND DELIVER CONCRETE IN ACCORDANCE WITH THE STANDARD SPECIFICATIONS IN ACI 301 AND TOLERANCES OF ACI 117. PLACE CONCRETE IN ACCORDANCE WITH ACI 304. CONDUCT HOT WEATHER AND COLD WEATHER CONCRETING IN ACCORDANCE WITH ACI 305 AND ACI 306 RESPECTIVELY.

2.01 MIX WATER:
- A. USE POTABLE WATER FREE FROM MATERIALS THAT ARE DELETERIOUS TO CONCRETE OR STEEL (ASTM C1602).

2.02 CEMENTITIOUS MATERIALS:
- A. PORTLAND CEMENT: CONFORM TO ASTM C 150, TYPE II, EXCEPT FOR MASS CONCRETE PROVIDE TYPE IV CEMENT OR ADDITIVES OR OTHER PROVISIONS TO REDUCE THE HEAT OF HYDRATION.
- B. FLY ASH: ACCEPTABLE FOR USE IN MIX DESIGN IF COMPLIANT WITH REQUIREMENTS OF CONTRACT DOCUMENTS AND THE MAX RATIO OF FLY ASH TO TOTAL CEMENT AND FLY ASH DOES NOT EXCEED 20 PERCENT BY WEIGHT. CONFORM TO ASTM C 618, TYPE F. DO NOT USE FLYASH IN COLORED CONCRETE WITHOUT WRITTEN APPROVAL.

2.03 AGGREGATE:
- A. PROVIDE A SINGLE SIZE OR A GRADATION OF AGGREGATE WITH THE MAXIMUM SIZE AS SHOWN ON THE MIX DESIGN PROPORTIONS BELOW. DO NOT USE AGGREGATES CONTAINING SOLUBLE SALTS OR OTHER SUBSTANCES SUCH AS IRON SULFIDES, PYRITE, MARCASITE, OCHRE, OR OTHER MATERIALS THAT MAY CAUSE STAINS ON EXPOSED CONCRETE SURFACES.
- B. UNLESS NOTED OTHERWISE, AGGREGATE SHALL BE NORMAL WEIGHT CONFORMING TO ASTM C33.

2.04 ADMIXTURES:
- A. SUBMIT ALL ADMIXTURES TO THE ENGINEER FOR REVIEW. DO NOT USE ADMIXTURES CONTAINING CALCIUM CHLORIDE. ADMIXTURES AND COMBINATIONS OF ADMIXTURES SHALL BE THE SAME AS THOSE USED IN THE FIELD OR TRIAL TEST DATA SUBMITTED.
- B. AIR ENTRAINING ADMIXTURE (ASTM C260): DO NOT USE CONTENT OF ENTRAINED AIR GREATER THAN THAT SUBMITTED IN TEST DATA FOR REVIEW. ALLOWABLE TOLERANCE FOR AIR CONTENT AT THE POINT OF DELIVERY IS +/ -1.5 PERCENT.
- C. SUPERPLASTICIZERS (HIGH RANGE WATER REDUCERS) AND WATER REDUCERS: COMPLY WITH ASTM C494 TYPE A AND TYPE F. FOR PLANT-ADDED SUPERPLASTICIZERS, MIXES THAT ARRIVE ON SITE WITH A SLUMP OF 5" OR LESS WILL NOT BE ACCEPTED. FOR SITE-ADDED SUPERPLASTICIZERS, THE MIX SHALL BE SLUMPED AT THE JOB SITE PRIOR TO THE ADDITION OF SUPERPLASTICIZERS. PROVIDE COMPUTER BATCH RECORDS IF SUPERPLASTICIZERS ARE USED. DO NOT ADD ADDITIONAL SUPERPLASTICIZERS ON SITE.
- D. SHRINKAGE REDUCING ADMIXTURE:
  1. USE IN ALL CONCRETE TOPPINGS FOR STAIR TREADS AND LANDINGS.
  2. PROVIDE ADMIXTURE THAT REDUCES CONCRETE DRYING SHRINKAGE BY 41 TO 62 PERCENT WHEN TESTED PER ASTM C157 WITHOUT REDUCING CONCRETE 28-DAY STRENGTH AND THAT IS COMPATIBLE WITH OTHER ADMIXTURES USED INCLUDING THOSE FOR AIR-ENTRAINMENT.

2.05 SLUMP:
TOLERANCE FOR SPECIFIED SLUMP IS +/-1 INCH BEFORE THE ADDITION OF SUPERPLASTICIZERS/WATER REDUCERS PER ACI 117. MAX SLUMP WITH SUPERPLASTICIZERS IS 8 INCHES. WATER MAY BE ADDED ON SITE FOR SLUMP ADJUSTMENT PROVIDED THE TOTAL AMOUNT ADDED IS MAINTAINED WITHIN THE WATER/CEMENTITIOUS RATIO AND SLUMP LIMITS SPECIFIED. DO NOT ADD WATER IF SUPERPLASTICIZERS HAVE BEEN ADDED.

2.06 MIX DESIGN PROPORTIONS (NORMAL WT CONCRETE U.N.O.)
- A. PROVIDE COMPUTERIZED BATCH RECORDS WITH ALL LOAD LOCATION.

LOCATION	MIN 28 DAY COMPR. STRENGTH	MAX W/CM RATIO	SLUMP	% AIR	MAX AGG SIZE
SIDEWALKS, CURBS, GUTTERS, CONCRETE FILL, PIPE ENCASEMENTS	3000 PSI	0.50	4"	1.5	1"
CAST-IN-PLACE REINFORCED CONCRETE	4000 PSI	0.40	4"	4.5	1"

2.07 NON-SHRINK GROUT:
- A. USE PLASTIC OR STIFF (DRY PACK), NON-METALLIC NON-SHRINK GROUT WITH MINIMUM 7,000 PSI COMPRESSIVE STRENGTH AT 28 DAYS. CONFORM TO THE REQUIREMENTS OF CRD-C 621 CORPS OF ENGINEERS FOR NON-SHRINK GROUT.
- B. SATURATE THE AREA WITH POTABLE WATER FOR 24 HOURS IMMEDIATELY PRIOR TO APPLICATION OF THE GROUT PER THE MANUFACTURER'S RECOMMENDATIONS. WET CURE AND APPLY CURING COMPOUNDS TO EXPOSED GROUT SURFACES.
- C. USE BASF CONSTRUCTION GROUT, EUCO DRY PACK GROUT, OR EQUAL.

2.08 NON-SHRINK EPOXY GROUT:
- A. USE POURABLE, NON-SHRINK, 100% SOLIDS FORMULA WITH MINIMUM 5000 PSI COMPRESSIVE STRENGTH AT 24 HOURS.
- B. ROUGHEN CONCRETE SURFACE AND EXPOSE AGGREGATE. APPLY TO CLEAN, DRY SURFACE PER MANUFACTURER'S RECOMMENDATIONS.
- C. USE BASF MASTERFLOW 648 CP, EUCO E3-F OR EQUAL.

3.01 CONCRETE PLACING:
- A. DO NOT PLACE CONCRETE IN CONTACT WITH ALUMINUM.
- B. DO NOT ADD WATER ON SITE OR AFTER SUPERPLASTICIZERS HAVE BEEN ADDED.
- C. THE MAXIMUM FREE DROP OF ANY CONCRETE IS 6'-0" WITHOUT A TREMI PIPE TO PREVENT SEGREGATION. DEPOSIT CONCRETE AS NEAR AS POSSIBLE TO ITS FINAL POSITION. DO NOT USE ANY PRACTICES THAT WILL CAUSE SEGREGATION SUCH AS (BUT NOT LIMITED TO) VIBRATING TO TRAVEL CONCRETE.
- D. MECHANICALLY VIBRATE ALL CONCRETE, EXCEPT THAT SLABS ON GRADE NEED BE VIBRATED ONLY AROUND UNDER-FLOOR DUCTS AND OTHER ITEMS EMBEDDED IN THE SLAB. REVIBRATE TOPS OF COLUMNS, CAISSONS (DRILLED PIERS), AND THE TOP 5 FEET OF WALLS (OVER 10 FEET IN HEIGHT).
- E. DO NOT CAST WALLS OR GRADE BEAMS IN A SINGLE POUR IN LENGTHS OVER 40 FEET. WAIT 48 HOURS BETWEEN ADJACENT CONCRETE CASTINGS.
- F. WAIT 28 DAYS MINIMUM AFTER CONCRETE HAS BEEN PLACED BEFORE SAND BLASTING, WATER BLASTING OR OTHER SURFACE TREATMENT.
- G. DO NOT PLACE CONCRETE IN STANDING WATER

3.02 FINISHING:
- A. PROVIDE FINISHES ON FORMED SURFACES PER ACI 301 AND FORMED SURFACE IRREGULARITIES PER ACI 117 AS FOLLOWS.
  1. ROUGH FORM FINISH: SURFACES NOT EXPOSED TO PUBLIC VIEW. PATCH TIE HOLES, LEAVE TEXTURE IMPARTED BY FORM, REMOVE FINS GREATER THAN 1/2 INCH IN HEIGHT.
  2. SMOOTH FORM FINISH: SURFACES EXPOSED TO PUBLIC VIEW. REMOVE FINS GREATER THAN 1/8 INCH IN HEIGHT.
  3. SURFACES EXPOSED TO VIEW: CLASS B SURFACE WITH ABRUPT IRREGULARITIES LESS THAN 1/4 INCH.
- B. THE USE OF WATER OR "SPRINKLING" AS AN AID TO FINISHING UNFORMED SURFACES IS NOT ACCEPTABLE.
- C. PROVIDE 3/4" X 3/4" CHAMFERS AT ALL EXPOSED CORNERS OF SLABS, WALLS, COLUMNS AND BEAMS.

3.03 CURING:
- A. CURE CONCRETE PER ACI 350-06 AND ACI 301 FOR 7 DAYS AFTER PLACEMENT. WHERE USED, ALL CURING COMPOUNDS SHALL HAVE A FUGITIVE DIE. ALL CURING COMPOUNDS SHALL BE COMPATIBLE WITH FUTURE TOPPINGS, PAINT, WATERPROOFING AND FINISHES. APPLY TWO HEAVY COATS OF CURING COMPOUND USING A HIGH PRESSURE AIRLESS SPRAYER. APPLY THE SECOND COAT 90 DEGREES TO THE FIRST. CLEAN ALL NOZZLES AFTER EACH USE.
- B. ALL CONCRETE SURFACES IN CONTACT WITH POTABLE WATER OR WATER THROUGHOUT TREATMENT TO BE POTABLE SHALL BE CONTINUOUSLY MOIST CURED OR CURING COMPOUNDS SHALL BE ANSI/NSF-61 CERTIFIED.
- C. ALL CONCRETE SURFACES NOT IN CONTACT WITH POTABLE WATER OR THE PROCESS OF TREATMENT FOR POTABLE WATER SHALL MEET THE MOISTURE RETENTION REQUIREMENTS OF ASTM C-309, TYPE 1-D AT COVERAGE RATE SPECIFIED, AND PASS VOC REQUIREMENTS.
- D. COLUMNS, WALLS, GRADE BEAMS, AND FOUNDATIONS: START CURING IMMEDIATELY UPON THE REMOVAL OF FORMS AND THE COMPLETION OF FINISHING WORK. THE TOPS OF SPREAD FOUNDATIONS WILL REQUIRE CURING COMPOUND.
- E. SLAB AND CAST-IN-PLACE FINISHED CONCRETE: START CURING IMMEDIATELY ONCE THE CONCRETE IS SET ENOUGH TO WALK ON WITHOUT HARMING THE FINISH.

3.04 CONCRETE REPAIR OR DEMOLITION:
- A. ALL PATCHING OF CONCRETE SHALL BE CONSIDERED STRUCTURAL. NOTIFY ENGINEER ON A CASE BY CASE BASIS.
- B. WHEN DRILLING, CHIPPING, SAWCUTTING, OR CORING INTO CONCRETE, GPR, X-RAY OR FERROSCAN EXISTING CONCRETE TO LOCATE REINFORCING. DO NOT CUT, NICK, OR OTHERWISE DAMAGE EXISTING REINFORCING.

REINFORCING STEEL

1.01 DESCRIPTION:
- A. THIS SECTION COVERS THE REQUIREMENTS FOR MATERIALS, DETAILING, AND INSTALLATION OF REINFORCING STEEL (RE: ACI 301-05, ACI 350-06).

1.02 COORDINATION:
- A. PLACE REINFORCEMENT IN CONFORMANCE WITH ACI DETAILING MANUAL ACI SP-66.
- B. DO NOT DAMAGE OR DISRUPT REINFORCING BARS OR CONNECTORS FROM THEIR PROPER LOCATION BY THE PLACEMENT OF EMBEDDED PIPING OR CONDUIT. PROVIDE CLEARANCE BETWEEN REINFORCEMENT AND EMBEDDED PIPING AND CONDUIT AT ALL TIMES.

1.03 SUBMITTALS:
- A. SUBMIT PLACING DRAWINGS PER ACI DETAILING MANUAL, ACI SP-66. INCLUDE ELEVATIONS SHOWING REINFORCING AT ALL CONCRETE WALLS AND FOUNDATIONS.
- B. SUBMIT ICC EVALUATION REPORTS OR OTHER APPROVED EVALUATIONS REPORTS AND LOCATIONS OF REINFORCEMENT CONNECTORS (MECHANICAL COUPLERS, ETC) AND REBAR TERMINATORS.

1.04 QUALITY ASSURANCE:
- A. TOLERANCES FOR FABRICATION, PLACEMENT, BAR BENDS, STANDARD HOOKS AND LAP SPLICES FOR REINFORCEMENT SHALL CONFORM TO ACI 117, SECTION 2 AND CRSI STANDARDS.

2.01 REINFORCEMENT MATERIALS:
- A. REINFORCING STEEL SHALL BE DEFORMED EXCEPT SPIRALS, AND WELDED PLAIN WIRE FABRIC.
- B. REINFORCING STEEL SHALL CONFORM TO THE FOLLOWING STANDARDS.
  1. #3 BARS AND LARGER - ASTM A 615, GRADE 60
  2. STIRRUPS AND COLUMN TIES - ASTM A 615, GRADE 60
  3. STEEL WIRE - ASTM A 82
  4. WELDED PLAIN (SMOOTH) WIRE FABRIC - ASTM A 185
  5. WELDABLE REINFORCING STEEL - ASTM A 706
  6. REBAR TERMINATORS - ASTM A 576

2.02 REINFORCEMENT CONNECTORS:
- A. REINFORCEMENT CONNECTORS ARE ACCESSORIES INCLUDING MECHANICAL BUTT SPLICES, FORM SAVERS, COUPLERS, AND TERMINATORS.
- B. TENSION, AND COMPRESSION AS REQUIRED, SPLICE CAPACITY OF CONNECTORS MUST EXCEED 125% OF THE YIELD STRENGTH (FY) OF THE REINFORCING BAR IN ACCORDANCE WITH ACI 318. INSTALL PER THE ICC REPORT AND MANUFACTURER'S RECOMMENDATIONS.
- C. SPECIAL INSPECTION WILL INCLUDE RANDOM TORQUE TESTING OF COUPLERS BEFORE AND AFTER INSTALLATION IN FORMS. IF ANY COUPLER DOES NOT PASS THE TORQUE TEST, ALL COUPLERS WILL BE TORQUED BY AN INDEPENDENT TESTING LAB AT THE CONTRACTOR'S EXPENSE. COUPLERS USED IN COLUMNS SHALL NOT BE LONGER THAN 8" OR HAVE A DIAMETER LARGER THAN 2.5 INCHES.
- D. REBAR TERMINATORS SHALL BE OF SUFFICIENT DIAMETER AND WIDTH TO BE CAPABLE OF DEVELOPING THE SPECIFIED YIELD STRENGTH OF THE REBAR. CONNECTION OF THE REBAR TERMINATORS TO THE REINFORCING STEEL SHALL BE CAPABLE OF DEVELOPING THE TENSION SPLICE CAPACITY FOR CONNECTORS.

GANNETT FLEMING

WILSON ENGINEERS
1620 West Fountainhead Pkwy
Suite 501
Tempe, Arizona 85282
Phone: (480) 893-8860
Improving Arizona's Infrastructure Since 1942

CITY OF CHANDLER
WATER RECLAMATION FACILITY
STRUCTURAL

GENERAL STRUCTURAL NOTES 2

CITY PROJECT NO.WW1901.203
WILSON PROJECT NO. 21007

Design: SJN	Drawn: MWK	Checked: TFW
Date: 02/2022	Wilson Project No. 21007	

Rev#	Date	Description	By

VERIFY SCALES
BAR IS ONE INCH ON ORIGINAL DRAWING
0 1"
IF NOT ONE INCH ON THIS SHEET, ADJUST SCALES ACCORDINGLY

Registered Professional Engineer
CERTIFICATE NO.
35234
TIM F. WONG
Date Signed 2/24/2022
ARIZONA, U.S.A.

Sheet No. S-2

AGENCY REVIEW

REINFORCING STEEL (CONTINUED)

3.01 PLACEMENT:
- A. SECURELY TIE ALL REINFORCING AND EMBEDDED ITEMS IN POSITION BEFORE PLACING CONCRETE OR GROUT. DO NOT STAB OR SHOVE INTO FRESHLY PLACED CONCRETE.
- B. TIE COLUMN CAGES TO FORMS AND SQUARE BEFORE PLACING CONCRETE. ALL CAGES AND FORMS SHALL BE SQUARED UP PLUMB AND CENTERLINE LOCATIONS OF ALL COLUMNS SHALL BE CHECKED BEFORE PLACING CONCRETE.

3.02 SLAB REINFORCEMENT (MIN), UNLESS NOTED OTHERWISE ON DRAWINGS:
- A. THE MINIMUM QUANTITY OF REINFORCEMENT IN SLABS SHALL BE AS SHOWN BELOW.

SLAB THICKNESS	REINFORCEMENT
6" SLAB	#3 @ 9" OR #4 @ 16"
8" SLAB	#3 @ 7" OR #4 @ 12"
10" SLAB	#4 @ 10"

- B. EDGE BARS: THE EDGES OF ALL SLABS SHALL BE REINFORCED WITH 2 #5 BARS CONTINUOUS.
- C. ALL OPENINGS IN SLABS SHALL HAVE 2 #5 BARS PARALLEL TO ALL EDGES, EXTENDING 2'-0" BEYOND EACH CORNER.
- D. SLAB REINFORCEMENT SHALL NOT BE CUT AT PLUMBING OR OTHER OPENINGS. SPREAD REINFORCEMENT AROUND OPENINGS.
- E. SUPPORT SLAB TOP REINFORCEMENT ON HIGH CHAIRS. USE #5 BARS AS SUPPORT BARS WHERE REQUIRED. ALL BARS AND CHAIRS MUST BE SECURELY TIED TOGETHER. PROVIDE SUFFICIENT SUPPORT TO MAINTAIN CONCRETE PROTECTION AS SPECIFIED. USE NON-FERROUS CHAIRS WHERE RUST STAINS ARE UNACCEPTABLE.

3.03 REINFORCEMENT (MIN), UNLESS NOTED OTHERWISE ON DRAWINGS:
- A. THE MINIMUM QUANTITY OF REINFORCEMENT IN WALLS SHALL BE AS SHOWN BELOW.

WALL THICKNESS	REINFORCEMENT (EACH FACE)
6"	#4 @ 18" VERT, #3 @ 7" HORIZ
8"	#4 @ 16" VERT, #4 @ 9" HORIZ
10"	#4 @ 14" VERT, #4 @ 8" HORIZ
12"	#5 @ 12" VERT, #5 @ 12" HORIZ

- B. PROVIDE 2 #5 BARS AT ALL WALL CORNERS AND ENDS, UNLESS NOTED OTHERWISE.
- C. ALL OPENINGS IN WALLS SHALL HAVE 2 #5 BARS PARALLEL TO ALL EDGES, EXTENDING 2'-0" BEYOND CORNERS.

3.04 COLUMN REINFORCEMENT:
- A. HOOKS ON COLUMN TIES SHALL BE 135 DEGREES. PROVIDE 90 DEGREE HOOKS AT TERMINATION OF COLUMN. HOOK VERTICAL REINFORCEMENT INTO SLAB OR BEAMS.

3.05 BEAM REINFORCEMENT:
- A. STIRRUP SUPPORT BARS SHALL BE PROVIDED BETWEEN ENDS OF TOP BARS AS REQUIRED. SUPPORT BARS SHALL BE #6 MINIMUM.

3.06 COVER:
- A. MINIMUM CONCRETE COVERAGE FOR REINFORCING BARS (TO FACE OF BAR INCLUDING PRIMARY REINFORCEMENT, STIRRUPS, TIES, AND SPIRALS) UNLESS NOTED OTHERWISE ON DRAWINGS.
- B. CAST-IN-PLACE CONCRETE (NON-PRESTRESSED)
  1. CONCRETE CAST AGAINST AND PERMANENTLY EXPOSED TO EARTH: ALL BARS - 3"
  2. CONCRETE CAST AGAINST FORMS AND PERMANENTLY EXPOSED TO EARTH OR WEATHER: #3 THRU #18 BARS - 2"
  3. CONCRETE NOT EXPOSED TO EARTH OR WEATHER:
     - i. SLABS, WALLS, JOISTS #3 THRU #18 BARS - 2"
     - ii. BEAMS, COLUMNS PRIMARY REINF, TIES, STIRRUPS, SPIRALS - 2"

3.07 SPLICES:
- A. ALL REINFORCEMENT IS CONTINUOUS AND MUST BE LAPPED WITH A FULL TENSION LAP OR TERMINATED WITH A 90 DEGREE STANDARD HOOK, UNLESS NOTED OTHERWISE ON DRAWINGS.
- B. ALL WALL REINFORCEMENT AT CORNERS, INTERSECTIONS, AND JUNCTIONS SHALL BE CONTINUOUS AND LAPPED OR TERMINATED IN A 90 DEGREE STANDARD HOOK.
- C. ALL RADIAL WALLS SHALL HAVE STAGGERED SPLICES WITH NO MORE THAN 1/3 OF THE REINFORCEMENT SPLICED AT ANY LOCATION.
- D. SPLICE REINFORCING BARS ONLY AT APPROVED LOCATIONS. SPLICE BOTTOM BARS OVER SUPPORTS AND TOP BARS AT MID-SPAN ONLY, UNLESS NOTED OTHERWISE ON DRAWINGS.
- E. DOWEL ALL VERTICAL REINFORCEMENT TO FOUNDATIONS, UNLESS NOTED OTHERWISE ON DRAWINGS. ALL DOWELS SHALL BE THE SAME SIZE AND SPACING AS THE REINFORCEMENT THAT IT IS SPLICED WITH, UNLESS NOTED OTHERWISE ON DRAWINGS.

3.08 LAP SPLICE LENGTHS:
- A. TOP BARS ARE CONSIDERED HORIZONTAL BARS LOCATED WHERE 12 INCHES OR MORE OF FRESH CONCRETE WILL BE PLACED BELOW THE BAR.
- B. LAP WELDED WIRE FABRIC TWO FULL SQUARES.
- C. ALL LAP SPLICES ARE CLASS 'B' SPLICES, UNLESS NOTED OTHERWISE ON DRAWINGS.
- D. MINIMUM LAPS SPLICE LENGTHS FOR CLASS 'B' LAPS AND FOR BARS WITH CONCRETE COVER OF AT LEAST ONE BAR DIAMETER ARE GIVEN IN THE FOLLOWING SCHEDULE, UNLESS NOTED OTHERWISE ON DRAWINGS.

REINFORCEMENT LAP SPLICE AND EMBEDMENT LENGTH (f'c ≥ 4000 PSI)							
BAR SIZE NO.	METRIC BAR SIZE NO.	BAR SPACING	MIN LAP LENGTH (IN)		MIN EMBEDMENT LENGTH (IN)		
			TOP BARS	OTHER BARS	STRAIGHT BARS		WITH STANDARD HOOK
			CLASS B	CLASS B	TOP BARS	OTHER BARS	
REQUIREMENTS FOR SLABS & WALLS**							
#3	#10	≥ 3db	24	19	19	15	7
#4	#13		32	25	25	19	10
#5	#16		40	31	31	24	12
#6	#19		48	37	37	29	15
#7	#22		70	54	54	42	17
#8	#25		80	62	62	48	19
#9	#29		91	70	70	54	22
#10	#32		102	79	79	61	24
#11	#36		113	87	87	67	27
REQUIREMENTS FOR BEAMS AND COLUMNS							
#3 THRU #7	#10 THRU #22	≥ 2db	SAME AS SLABS AND WALLS ABOVE				
#8	#25	2 db OR LESS	121	93	93	71	19
#9	#29		136	105	105	61	22
#10	#32		153	118	118	91	24
#11	#36		170	131	131	181	27

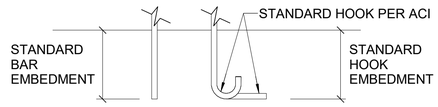

** FOR BAR CLEAR SPACING LESS THAN 3 BAR DIAMETER, ADD 50%

3.09 WELDING:
- A. DO NOT WELD REINFORCING STEEL EXCEPT WHERE SUCH WELDING HAS BEEN SUBMITTED TO THE OWNER'S AGENT FOR REVIEW BY THE STRUCTURAL ENGINEER.
- B. WELDING WILL NOT BE ACCEPTED AS A SUBSTITUTE FOR TIE WIRES OR TO AID IN SUPPORTING REINFORCING STEEL.
- C. WELD REINFORCING BARS IN CONFORMANCE WITH AWS D1.4 USING ELECTRODE E8018-X.
- D. SUBMIT WELDER CERTIFICATIONS AND WELDING PROCEDURES PER AWS D1.4.

CONSTRUCTION JOINTS

1.01 LOCATION OF ALL CONSTRUCTION JOINTS SHALL BE AS SHOWN ON THE DRAWINGS OR APPROVED BY THE ENGINEER. SUBMIT CONSTRUCTION JOINT LOCATIONS NOT SHOWN ON THE STRUCTURAL DRAWINGS TO THE ENGINEER FOR REVIEW.

1.02 PROVIDE AND INSTALL POLYVINYLCHLORIDE (PVC), THERMOPLASTIC VULCANIZATE WATERSTOP (TPV) AND HYDROPHILIC VINYLESTER WATERSTOPS WHERE SHOWN ON DRAWINGS AND AT ALL CONSTRUCTION JOINTS IN WATERBEARING, AND PARTIALLY AND FULLY UNDERGROUND SLABS AND WALLS (INCLUDING ELEVATOR AND ESCALATOR PITS, AND CHEMICAL CONTAINMENT AREAS). WATERSTOPS ARE NOT REQUIRED IN WALLS AND SLABS WHEN THERE IS WATER ON BOTH SIDES UNLESS NOTED OTHERWISE.

1.03 PROVIDE AND INSTALL PREFORMED JOINT MATERIAL IN EXPANSION AND ISOLATION JOINTS WHERE NOTED ON DRAWINGS. PROVIDE ELASTOMERIC JOINT SEALANT AND ALL NECESSARY ACCESSORIES SUCH AS BACKER ROD AND BOND BREAKER TAP WHERE EXPANSION JOINT IS TO BE SUBMERGED FOR ANY AMOUNT OF TIME OR WHERE NOTED ON DRAWINGS AS "CAULK AND SEAL".

1.04 SUBMIT THE FOLLOWING PRIOR TO START OF WORK:
- A. LAYOUT OF CONSTRUCTION AND EXPANSION JOINTS
- B. MANUFACTURER'S PRODUCT SPECIFICATIONS AND INSTALLATION INSTRUCTIONS FOR WATERSTOPS AND JOINT FILLER MATERIAL AND ACCESSORIES.

2.01 PROVIDE WATERSTOPS AND JOINT SEALANT SUITABLE FOR THEIR CONDITION OF USE SUCH AS MOVEMENT AND/OR CHEMICAL ATTACK (FOR EXAMPLE, WATER CONTAMINATED WITH SOLVENTS AND HYDROCARBONS).

2.02 PROVIDE PREFORMED JOINT FILLER IN ACCORDANCE WITH ASTM D 1752 TYPE I (FOAM RUBBER) OR TYPE II (CORK) AT INTERIOR EXPANSION JOINTS AND AS NOTED ON DRAWINGS. PROVIDE PREFORMED BITUMINOUS JOINT FILLER IN ACCORDANCE WITH ASTM D 1751 FOR EXTERIOR ISOLATION JOINTS AND AS NOTED ON DRAWINGS.

3.01 ALL CONSTRUCTION JOINTS SHALL BE THOROUGHLY CLEANED FOR BOND. CAULK AND SEAL JOINTS PER JOB SPECIFICATIONS AND WHERE NOTED ON DRAWINGS.

3.02 SEE TYPICAL DETAILS FOR INSTALLATION OF CONSTRUCTION JOINTS AND WATERSTOPS IN NEW CONSTRUCTION AND BETWEEN EXISTING AND NEW CONSTRUCTION.

3.03 FOR NON-WATERBEARING SLABS-ON-GRADE, PLACE JOINTS IN 12" SLAB ON GRADE AT 20'-0" MAXIMUM OR IN RATIOS NOT TO EXCEED 2:1. TIMING OF JOINT SAWING IS CRITICAL. JOINTS SHOULD BE SAWN AS SOON AS THE CONCRETE IS HARD ENOUGH THAT THE SAWING DOES NOT RAVEL JOINT EDGES OR DISLODGE COURSE AGGREGATE PARTICLES. PROVIDE SAWCUTS IN A RECTANGULAR PATTERN AS SHOWN ON PLANS. WHERE A PATTERN IS NOT SHOWN, SAWCUT ON COLUMN LINES, AT EQUAL SPACES BETWEEN COLUMN LINES TO PRODUCE THE MAXIMUM SPACING, AND AT ALL RE-ENTRANT CORNERS AND SLAB CHANGES. PROVIDE ISOLATION JOINTS IN A DIAMOND PATTERN AROUND COLUMNS. SUBMIT JOINT LAYOUT PLAN PRIOR TO STARTING WORK.

MASONRY CONSTRUCTION

1.01 DESCRIPTION:
- A. THIS SECTION INCLUDES THE REQUIREMENTS FOR MATERIAL PROPORTIONING, AND REQUIREMENTS FOR INSTALLATION OF MASONRY CONSTRUCTION.

1.02 SUBMITTALS:
- A. MASONRY SHOP DRAWINGS SHALL INCLUDE THE FOLLOWING ITEMS:
  1. COMPLETE LAYOUT OF MASONRY WALLS INCLUDING MODULAR PLANNING AND SPECIAL SHAPES. SHOW DETAILS FOR EACH CONDITION ENCOUNTERED. PROVIDE PLANS AND ELEVATIONS DRAWN AT 1/4-INCH SCALE AND DETAILS DRAWN AT 1 1/2 INCH SCALE. SHOW ITEMS REQUIRED TO BE BUILT INTO MASONRY.
  2. MASONRY CONTROL JOINT LOCATIONS AND DETAILS.
  3. LOCATION, EXTENT AND CONFIGURATION OF EMBEDDED AND PENETRATING ITEMS TO BE BUILT INTO THE UNIT MASONRY.
  4. DRAWINGS FOR FABRICATION, BENDING AND PLACEMENT OF REINFORCING BARS. INCLUDING BAR SCHEDULES, BAR DIAGRAMS, STIRRUP SPACING, LATERAL TIES AND OTHER ITEMS REQUIRED FOR FABRICATION AND PLACEMENT OF MASONRY REINFORCING.

1.03 QUALITY ASSURANCE:
- A. MINIMUM 28-DAY COMPRESSIVE STRENGTH OF EACH WYTHE OF CONCRETE MASONRY, f'm = 2000 PSI.

2.01 MATERIALS:
- A. LOAD BEARING HOLLOW CONCRETE MASONRY UNITS: NORMAL WEIGHT WITH COMPRESSIVE STRENGTH OF 1900 PSI ON THE NET AREA. UNITS SHALL CONFORM TO ASTM C-90.
- B. GROUT: 2000 PSI, MINIMUM 28 DAY COMPRESSIVE STRENGTH. MECHANICALLY VIBRATE GROUT IMMEDIATELY AFTER POURING AND AGAIN AFTER NO LATER THAN 20 MINUTES FOR RECONSOLIDATION. GROUT SHALL CONFORM TO ASTM C 476 AND ACI-530-11 BUILDING CODE. MIX GROUT FOR AT LEAST FIVE MINUTES AND UNTIL MIX HAS BEEN ATTAINED.GROUT SHALL HAVE SUFFICIENT WATER ADDED TO PRODUCE A CONSISTENCY FOR POURING WITHOUT SEGREGATION (8" TO 11" SLUMP). USE GROUT WITHIN 1 1/2 HOURS AFTER ADDING WATER TO THE MIX.
- C. MORTAR SHALL BE PORTLAND CEMENT-LIME TYPE S CONFORMING TO ASTM C 270, WITH A MINIMUM AVERAGE 28 DAY COMPRESSIVE STRENGTH OF 1800 PSI AND MAXIMUM AIR CONTENT OF 12%. DO NOT USE MASONRY CEMENT IN MORTAR. THE MIXTURE OF CEMENTITIOUS MATERIAL, AGGREGATE, AND WATER SHALL CONFORM TO THE FOLLOWING PROPORTIONS BY VOLUME:
  1. 1 PART PORTLAND CEMENT OR BLENDED CEMENT CONFORMING TO ASTM C 150 AND ASTM C515 RESPECTIVELY.
  2. 1/4 TO 1/2 PARTS HYDRATED LIME OR LIME PUTTY CONFORMING TO ASTM C 207.
  3. VOLUME OF AGGREGATE, MEASURED IN DAMP LOOSE CONDITION, EQUAL TO 2 1/4 TO 3 TIMES THE SUM OF THE VOLUMES OF THE ABOVE CEMENTITIOUS MATERIALS.

2.02 MINIMUM WALL VERTICAL REINFORCEMENT:
- A. PROVIDE CONTINUOUS FULL HEIGHT VERTICAL REINFORCING IN CENTER OF GROUTED VERTICAL CELLS AS SHOWN ON PLANS. PROVIDE MINIMUM VERTICAL REINFORCEMENT OF (1) #5 AT 32" ON CENTER, UNLESS NOTED OTHERWISE ON DRAWINGS.
- B. FOR OPENINGS 16" AND GREATER, PROVIDE 1 #5 WITHIN 16" OF EACH SIDE OF OPENINGS. EXTEND REINF SAME LENGTH AS ADJACENT WALL REINFORCEMENT. OPENINGS SMALLER THAN 16" ONLY NEED ADDITIONAL REINFORCEMENT IF TYPICAL REINFORCEMENT IS DISRUPTED.
- C. PROVIDE (3) #5 AT CORNERS, (4) #5 AT INTERSECTIONS (1) #5 EACH SIDE OF MOVEMENT JOINTS, AND (1) #5 AT WALL ENDS.

2.03 MINIMUM WALL HORIZONTAL REINFORCEMENT (UNLESS NOTED OTHERWISE ON DRAWINGS):
- A. PROVIDE 8" DEEP CONTINUOUS GROUTED BOND BEAMS WITH: PROVIDE (2) #5 AT SLAB ON GRADE (SOG), (2) #5 BARS AT WALL MIDHEIGHT (8'-0" MAX ABOVE FINISHED FLOOR), ROOF DIAPHRAGM CONNECTION, AND (2) #5 AT TOP OF PARAPETS. EXTEND REINFORCING THROUGH EXPANSION AND CONTROL JOINTS, WRAPPING BARS WITH TWO-LAYERS OF 1/8" THICK BOND BREAKING TAPE 2'-0" BOTH SIDES OF JOINT. DO NOT SPLICE BOND BEAM REINFORCING WITHIN 6'-0" OF AN EXPANSION OR CONTROL JOINT. PROVIDE BOND BEAM TYPE BLOCK FOR ALL HORIZONTAL REINFORCING.
- B. JOINT REINFORCEMENT: PROVIDE GALVANIZED LADDER TYPE #9 JOINT REINFORCING AT 16" VERTICAL SPACING OF CROSS WIRES AT 16" SPACING DO NOT USE TRUSS TYPE JOINT REINFORCING. CONFORM TO ASTM A951
- C. AT PITCHED ROOF LINES, BOND BEAM SHALL BE STEPPED TO MATCH THE WALL/DIAPHRAGM JUNCTION.
- D. PROVIDE (1) #5 BAR ABOVE AND BELOW ALL OPENINGS WITH ENDS EXTENDING 24" PAST THE OPENING. UNLESS OTHERWISE NOTED ON DRAWING OR BY LINTEL DETAILS OR LINTEL SCHEDULE.

2.04 SPLICES:
- A. REBAR LAP SPLICES

BAR SIZE	LAP LENGTH
#3	16"
#4	36"
#5	45"
#6	54"

- B. LAP JOINT REINFORCING 12" MINIMUM AT SPLICES. SPLICES SHALL CONTAIN AT LEAST ONE CROSS WIRE OF EACH PIECE OF REINFORCEMENT IN THE LAPPED DISTANCE.

2.05 JOINTS:
- A. SEE PLANS FOR MASONRY CONTROL JOINTS (MCJ) LOCATIONS. SPACE MASONRY CONTROL JOINTS 24'-0" ON CENTER UNLESS SHOWN OTHERWISE. LOCATE CONTROL JOINTS NO MORE THAN 12'-0" FROM WALL CORNERS. LOCATE CONTROL JOINTS AT VERTICAL INTERFACES OF CHANGES IN WALL HEIGHT OR WALL THICKNESS UNLESS SHOWN DIFFERENT ON DRAWINGS.
- B. EXPANSION JOINTS, CONTROL JOINTS, AND CONTINUOUS VERTICAL MORTAR JOINTS, SHALL BE AT LEAST 16" AWAY FROM BEARING PLATES AND OPENINGS OF JAMBS.

1620 West Fountainhead Pkwy
Suite 501
Tempe, Arizona 85282
Phone: (480) 893-8860

WILSON ENGINEERS

Improving Arizona's Infrastructure Since 1942

CITY OF CHANDLER
WATER RECLAMATION FACILITY
STRUCTURAL

GENERAL STRUCTURAL NOTES 3

CITY PROJECT NO.WW1901.203
WILSON PROJECT NO. 21007

Design: SJN	Drawn: MWK	Checked: TFW
Date: 02/2022	Wilson Project No. 21007	

Rev#	Date	Description	By

VERIFY SCALES
BAR IS ONE INCH ON ORIGINAL DRAWING
0 1"
IF NOT ONE INCH ON THIS SHEET, ADJUST SCALES ACCORDINGLY



GANNETT FLEMING

Sheet No. S-3

AGENCY REVIEW

MASONRY CONSTRUCTION (CONTINUED)

3.01 MASONRY UNIT PLACEMENT:
- A. LAY UNITS IN RUNNING BOND. CORNERS SHALL BE STANDARD BOND WITH OVERLAPPING UNITS.
- B. MAXIMUM GROUT LIFT WITHOUT CLEAN-OUTS AND INSPECTION OF CLEANOUTS SHALL BE 5'-4".
- C. PROVIDE LINTEL TYPE BLOCKS AT THE BOTTOM OF LINTELS. PROVIDE DOUBLE OPEN END HALF WEB HEIGHT BLOCK FOR REMAINDER OF LINTEL DEPTH. PLACE ALL BLOCKS OF LINTEL IN RUNNING BOND THROUGHOUT SPAN AND AT JAMBS.
- D. CONCRETE MASONRY UNITS SHALL NOT BE WETTED.

3.02 REINFORCING PLACEMENT:
- A. PROVIDE REINFORCEMENT BAR POSITIONER ON ALL VERTICAL REINFORCING AT EACH END OF BAR AND AT 4'-0" MAXIMUM VERTICAL SPACING USING SINGLE WIRE LOOP TYPE TIES AS MANUFACTURED BY HOHMANN AND BARNARD INC PRODUCTS COMPANY OR APPROVED ALTERNATE.
- B. REINFORCING SHALL BE CLEAR OF MASONRY FACE SHELLS AND OTHER REINFORCING NOT SPLICED: 1/4" FOR FINE GROUT AND 1/2" FOR COURSE GROUT.

3.03 GROUT PLACEMENT:
- A. PRIOR TO GROUTING, CLEAN OUT SPACES TO BE FILLED WITH GROUT. REMOVE MORTAR PROJECTIONS GREATER THAN 1/2 INCH, MORTAR DROPPINGS AND OTHER FOREIGN MATERIAL. SPACES DESIGNATED TO BE GROUTED SHALL BE FILLED COMPLETELY WITH GROUT AND THE GROUT SHALL BE CONFINED TO THOSE SPECIFIC SPACES. REMOVE DEBRIS FROM BOTTOM OF MASONRY CELLS PRIOR TO GROUTING.
- B. GROUT SOLID WALLS IN CONTACT WITH EARTH (RETAINING WALLS, STEM WALLS, ETC.) AND AS NOTED ON DRAWINGS. GROUTED MASONRY SHALL BE CONSTRUCTED IN SUCH A MANNER THAT ALL ELEMENTS OF THE MASONRY ACT TOGETHER AS A STRUCTURAL ELEMENT.
- C. THE GROUTING OF ANY SECTION OF WALL SHALL BE COMPLETED IN ONE DAY WITH NO INTERRUPTIONS GREATER THAN ONE HOUR.
- D. BETWEEN GROUT POURS, A HORIZONTAL CONSTRUCTION JOINT SHALL BE FORMED BY STOPPING ALL WYTHES AT THE SAME ELEVATION AND WITH THE GROUT STOPPING A MINIMUM OF 1 1/2 INCHES BELOW A MORTAR JOINT, EXCEPT AT THE TOP OF THE WALL. WHERE BOND BEAMS OCCUR, THE GROUT POUR SHALL BE STOPPED A MINIMUM OF 1/2 INCH BELOW THE TOP OF THE MASONRY.
- E. CELLS AND SPACES CONTAINING REINFORCEMENT, ANCHOR BOLTS, OR HEADED ANCHOR STUDS (HAS) SHALL BE FILLED WITH GROUT. EMBEDS SHALL BE TIED OR FIXED IN PLACE PRIOR TO GROUTING.
- F. GROUT SHALL BE CONSOLIDATED BY MECHANICAL VIBRATION DURING PLACEMENT BEFORE LOSS OF PLASTICITY IN A MANNER TO FILL THE GROUT SPACE. GROUT POURS GREATER THAN 12 INCHES IN HEIGHT WILL BE RECONSOLIDATED BY MECHANICAL VIBRATION TO MINIMIZE VOIDS. GROUT POURS 12 INCHES OR LESS IN HEIGHT SHALL BE MECHANICALLY VIBRATED OR PUDDLED AND RODDED WITH SMOOTH BAR WITH ROUNDED END. VIBRATORS SHALL BE 120V, 60 HERTZ. BATTERY POWERED VIBRATORS ARE PROHIBITED.
- G. PROVIDE CONTINUOUS WIRE LATH GROUT BARRIERS AT TOP AND BOTTOM OF BOND BEAMS IN PARTIALLY GROUTED WALLS TO PREVENT GROUT FROM FLOWING UP AND OUT OF CELLS.
- H. BEAM POCKETS SHALL BE GROUTED FULL WITH NON-SHRINK GROUT AFTER ALL WELDS/CONNECTION HAVE BEEN STRUCTURALLY INSPECTED.

3.04 EMBEDDED ITEMS:
- A. WHERE MASONRY ENCOMPASSES STEEL BEAMS PROVIDE DOVETAIL ANCHORS AT 16 INCHES ON CENTER.
- B. HOLES IN MASONRY UNITS SHALL BE DRILLED. HOLES MADE BY CHIPPING WILL NOT BE ACCEPTED.
- C. MINIMUM EMBEDMENT OF BOLTS IN MASONRY OR GROUT PERPENDICULAR TO THE PLANE OF THE WALL SHALL BE 6" WITH A HEAD AT THE EMBEDDED END OR 5" WITH A 3" HOOK AT THE EMBEDDED END. MINIMUM EMBEDMENT OF BOLTS PROJECTING VERTICAL OUT OF THE TOP OF MASONRY WALL SHALL BE 8" WITH A HEAD BOLT AT THE EMBEDDED END OR 5" WITH A 3" HOOK AT THE EMBEDDED END.
- D. PROVIDE DOVETAIL ANCHORS AT 16 INCHES o.c. WHEN NEW MASONRY WALLS ABUT WITH NEW CONCRETE WALLS AND COLUMNS.
- E. WHERE DRAWING CALL FOR THE USE OF SPLIT-FACE TYPE BLOCK OR FLUTED TYPE BLOCK THE CONTRACTOR SHALL CHIP OFF AND GRIND SMOOTH SPLIT-FACE AND CHIPPED SURFACE AREAS SO THAT FACE MOUNTED STEEL EMBED PLATES WILL BE INSTALLED FLUSH TO BLOCK SURFACE. CONTRACTOR MAY BE REQUIRED TO SUPPLY ADDITIONAL STEEL SPACER PLATES OF DIFFERENT THICKNESS TO ALIGN EMBEDS.

STRUCTURAL STEEL

1.01 DESCRIPTION:
- A. THIS SECTION COVERS THE REQUIREMENTS FOR MATERIALS AND INSTALLATION OF STRUCTURAL STEEL.

1.02 SUBMITTALS:
- A. SUBMIT SHOP DRAWINGS FOR ENGINEER'S REVIEW. FABRICATE ONLY FROM REVIEWED DRAWINGS.

1.03 QUALITY ASSURANCE:
- A. STEEL CONSTRUCTION SHALL CONFORM TO THE SPECIFICATIONS AND STANDARDS AS CONTAINED IN THE LATEST EDITION OF THE AMERICAN INSTITUTE OF STEEL CONSTRUCTION (AISC) MANUAL, INCLUDING THE COMMENTARY AND SUPPLEMENTS THERETO, AS ISSUED.

2.01 MATERIALS SHALL CONFORM WITH THE FOLLOWING STANDARDS, UNLESS NOTED OTHERWISE ON DRAWINGS:
- A. W-SHAPES - ASTM A992, FY=50 KSI
- B. PLATES FOR W-SHAPE MEMBERS AND STRUCTURAL TUBES - ASTM A572 GR 50
- C. OTHER ROLLED SECTIONS (ANGLES, CHANNELS, PLATES, ETC.) - ASTM A36, FY=36 KSI
- D. WHERE NOTED 50 KSI ON DRAWINGS - ASTM A572, FY=50 KSI
- E. STEEL PIPE - ASTM A53, GR. B, FY=35 KSI
- F. STRUCTURAL PIPES (HSS) - ASTM A500, GR. C, FY=46 KSI
- G. STRUCTURAL RECTANGULAR (HSS) - ASTM A500, GR C, FY=50 KSI
- H. STRUCTURAL BOLTS U.N.O. - ASTM A325 (TYPE N CONNECTION)
- I. ANCHOR BOLTS - ASTM F1554, GRADE 36
- J. WELDING RODS - E-70XX SERIES LOW HYDROGEN.

2.02 FINISHES:
- A. STEEL COMPLETELY ENCASED IN CONCRETE SHALL NOT BE PAINTED AND AT THE TIME THE CONCRETE IS PLACED, SHALL BE CLEAN AND FREE FROM ANY SUBSTANCE THAT MIGHT IMPAIR THE BOND BETWEEN THE STEEL AND CONCRETE.
- B. SEE STEEL SPECIFICATIONS FOR PRIME COATING OF ALL STEEL MEMBERS AND PAINTING SPECIFICATIONS FOR PAINTING STEEL.

3.01 WELDING:
- A. WELDING SHALL CONFORM TO AMERICAN WELDING SOCIETY (AWS) STRUCTURAL WELDING CODE FOR STEEL, AWS D1.1.
- B. ALL WELDERS SHALL HOLD VALID CERTIFICATES ISSUED BY AN ACCEPTED TESTING AGENCY WITHIN THE LAST 12 MONTHS. IF ANY CERTIFICATE IS MORE THAN 12 MONTHS OLD SUBMIT DETAILS OF COMPANY QUALITY CONTROL PROGRAM.
- C. ALL WELDERS SHALL SUBMIT PREQUALIFIED WELDING AND WELDING PROCEDURES TO BE AVAILABLE ON PREMISES FOR REVIEW.
- D. WELDS INDICATED WITH A SHOP WELD SYMBOL MAY BE MADE IN THE FIELD ONLY WHEN SUCH WELDING HAS BEEN SUBMITTED TO THE ENGINEER FOR REVIEW.
- E. PERFORM ULTRA-SONIC TESTS ON ALL FULL PENETRATION WELDS.
- F. GRIND SMOOTH ALL EXPOSED WELDS AND CUT EDGES. FINAL APPROVAL IS BY THE ENGINEER.
- G. ALL WELDING SHALL BE BY EITHER THE SHIELDED METAL ARC WELDING (SMAW) METHOD OR SHALL CONFORM TO AWS CODE FOR ARC AND GAS WELDING CONSTRUCTION. PROVIDE MINIMUM WELD SIZES PER AISC SPECIFICATIONS FOR GENERAL PROVISIONS FOR CONNECTIONS, JOINTS AND FASTENERS UNLESS SHOWN OTHERWISE ON DRAWINGS.

3.02 BOLTING:
- A. WHEN LONG SLOTTED HOLES ARE SPECIFIED BY DETAILS AND/OR NOTES ON DRAWINGS, THE CONTRACTOR SHALL SUPPLY PLATE WASHERS AS REQUIRED BY AISC SPECIFICATIONS.

STAINLESS STEEL

1.01 EXPOSED STRUCTURAL STEEL, INCLUDING STEEL CONNECTIONS, SHALL BE STAINLESS STEEL AS NOTED ON THE DRAWINGS. ALL EMBEDDED STEEL COMPONENTS OF A STAINLESS STEEL CONNECTION SHALL ALSO BE STAINLESS STEEL.

2.01 STAINLESS STEEL MEMBERS AND MEMBER COMPONENTS SHALL CONFORM TO THE FOLLOWING ASTM SPECIFICATIONS:
- A. PLATES, SHEETS, AND STRIPS - ASTM A240
- B. BAR AND SHAPES - ASTM A276
- C. BOLTS - ASTM F593
- D. NUTS - ASTM F594
- E. WASHERS - ASTM A320
- F. DEFORMED AND PLAIN BARS FOR CONCRETE REINFORCEMENT - ASTM A955

3.01 WELDING OF STAINLESS STEEL COMPONENTS SHALL CONFORM TO AWS D1.6.

POST-INSTALLED ANCHORS AND DOWELS

1.01 DESCRIPTION:
- A. THIS SECTION COVERS THE REQUIREMENTS FOR MATERIALS AND INSTALLATION OF POST-INSTALLED ADHESIVE ANCHORS, DOWELS AND MECHANICAL ANCHORS IN CONCRETE AND MASONRY CONSTRUCTION.
- B. DO NOT USE POST-INSTALLED ADHESIVE ANCHOR OR DOWELS SYSTEMS TO RESIST GRAVITY LOADS IN FIRE RATED CONSTRUCTION.
- C. POST INSTALLED ANCHORS AND DOWELS SHALL ONLY BE USED WHERE SPECIFIED ON THE CONSTRUCTION DOCUMENTS. THE CONTRACTOR SHALL OBTAIN WRITTEN APPROVAL FROM THE ENGINEER OF RECORD PRIOR TO INSTALLING ANY STRUCTURAL POST INSTALLED ANCHORS OR DOWELS THAT MAY BE USED TO REPLACE MISSING OR MISPLACED CAST-IN-PLACE ANCHORS OR DOWELS.

1.02 QUALITY ASSURANCE:
- A. PROVIDE SPECIAL INSPECTION IN ACCORDANCE WITH THE APPLICABLE ICC-ES REPORT, THE BUILDING CODE, AND THE GENERAL STRUCTURAL NOTES.

2.01 ANCHORS RODS, BOLTS, AND SLEEVES:
- A. SUBMERGED, EXTERIOR, OR BURIED CONDITIONS: PROVIDE ASTM F593 AISI TYPE 316 STAINLESS STEEL ANCHOR BOLTS WITH ASTM F594 STAINLESS STEEL NUTS.
- B. INTERIOR CONDITIONS: PROVIDE ASTM A307 CARBON STEEL ANCHOR RODS UNLESS NOTED OTHERWISE.

2.02 MECHANICAL ANCHORS FOR GROUT FILLED MASONRY (CMU):
- A. KWIK BOLT 3 EXPANSION ANCHOR BY HILTI (ICC-ES REPORT #ESR-1385), (STAINLESS STEEL BODY FOR EXTERIOR OR DAMP EXPOSURE).
- B. WEDGE-ALL ANCHOR BY SIMPSON (ICC-ES REPORT #ESR-1396), (STAINLESS STEEL BODY FOR EXTERIOR OR DAMP EXPOSURE).
- C. OR APPROVED EQUAL.

2.03 MECHANICAL ANCHORS FOR CONCRETE:
- A. KWIK BOLT TZ EXPANSION ANCHOR BY HILTI (ICC-ES REPORT #ESR-1917) (USE STAINLESS STEEL ANCHORS FOR EXTERIOR OR DAMP EXPOSURE)
- B. STRONG-BOLT 2 (USE STAINLESS STEEL ANCHORS FOR EXTERIOR OR DAMP EXPOSURE) WEDGE ANCHOR BY SIMPSON (ICC-ES REPORT #ESR-3037)
- C. OR APPROVED EQUAL.

2.04 ADHESIVES FOR ANCHORS AND DOWELS IN GROUT FILL MASONRY (CMU):
- A. HIT HY 200 BY HILTI (ICC-ES REPORT #ESR-3963).
- B. SET-XP ADHESIVE ANCHOR SYSTEM BY SIMPSON (IAPMO ER 265).
- C. OR APPROVED EQUAL.

2.05 ADHESIVES FOR ANCHORS AND DOWELS IN CONCRETE:
- A. HIT-RE 500 V3 BY HILTI (ICC-ES REPORT #ESR-3814).
- B. SET-3G BY SIMPSON (ICC-ES REPORT #ESR-4057).
- C. OR APPROVED EQUAL.

3.01 FIELD INSTALLATION:
- A. INSTALL ANCHORS ONLY AFTER CONCRETE HAS REACHED ITS MINIMUM SPECIFIED STRENGTH.
- B. LOCATE ANCHORS TO AVOID DAMAGE TO REINFORCEMENT. USE GROUND PENETRATING RADAR (GPR) CONCRETE TO LOCATE THE EXISTING REINFORCING. MARK REINFORCING LOCATIONS ON THE CONCRETE SURFACE. COORDINATE LOCATIONS OF HOLES TO BE DRILLED WITH MARKS TO CLEAR THE EXISTING REINFORCING.
- C. INSTALL ANCHORS IN ACCORDANCE WITH MANUFACTURER'S PUBLISHED INSTALLATION INSTRUCTIONS.
- D. CLEAN DRILLED HOLES USING WIRE BRUSH AND COMPRESSED AIR AS REQUIRED TO REMOVE PARTICULATE DEBRIS AND TO ACHIEVE A DUST FREE SURFACE.
- E. TORQUE ADHESIVE ANCHORS UPON INSTALLING BASE MATERIAL, BUT ONLY AFTER ADHESIVE IS FULLY CURED AND LOAD TEST HAVE BEEN PERFORMED.

METAL DECK

1.01 DESCRIPTION:
- A. THIS SECTION DESCRIBES STEEL DECKING AS SHOWN ON THE DRAWINGS. SEE DRAWINGS FOR EXTENT, ORIENTATION, TYPE AND THICKNESS OF DECK REQUIRED.

1.02 COORDINATION:
- A. PROVIDE FIRE-STOP BETWEEN DECK AND MASONRY OR CONCRETE SURFACE AT ALL FIRE RATED ASSEMBLIES.
- B. FOR INSULATING CONCRETE MATERIALS, SEE CONCRETE SECTION OF GENERAL STRUCTURAL NOTES.
- C. PROVIDE METAL PROFILE CLOSURES AT DECK FLUTES AT PERPENDICULAR SUPPORTS.

1.03 SUBMITTALS:
- A. SHOP DRAWINGS SHALL SHOW THE ERECTION PROCEDURE AND DETAILS, THE ICC-EVALUATION SERVICE REPORT NUMBER, SECTION PROPERTIES, AND DIAPHRAGM SHEAR FURNISHED AND SHALL BE SUBMITTED FOR REVIEW PRIOR TO FABRICATION.

2.01 TYPE "N" ROOF DECK
- A. ALL SHEETS TO BE 20 GAGE, 3" DEEP, AND 24" WIDE PER IAPMO ER 2018 OR EQUAL. NARROWER CLOSURE STRIPS SHALL NOT BE LESS THAN 1'-6" WIDE AND SHALL BE FASTENED TO ADJACENT FULL SHEET WITH TYPICAL SIDE SEAM ATTACHMENT.
- B. PROVIDE STEEL DECK CONFORMING TO ASTM A 653, SS GRADE 50 (MIN) WITH GALVANIZED COATING DESIGNATION G60.
- C. MINIMUM DECK PROPERTIES ARE AS FOLLOWS:
  1. YIELD STRENGTH, Fy = 50 KSI
  2. POSITIVE BENDING EFFECTIVE SECTION MODULUS (DECK TOP IN COMPR) a. +Sx = 0.443 IN^3/FT
  3. NEGATIVE BENDING EFFECTIVE SECTION MODULUS (DECK BOTTOM IN COMPR) a. -Sx = 0.531 IN^3/FT
  4. DEFLECTION a. Id = 0.907 IN^4/FT
- D. FASTEN TO STRUCTURAL FRAMING WITH HILTI X-ENP-19 L15 AS PER ESR-2197 AT:
  1. ALL FLUTES AT TRANSVERSE SUPPORTS AND
  2. ALL STEEL MEMBERS PARALLEL TO FLUTES @ 12"o.c.
- E. FASTEN SIDE-LAPS WITH HILTI KWIK-FLEX 1/4-14 x 1" AT 12"o.c.
- F. FASTEN DECK WITH 3/4" PUDDLE WELD (1/2 FUSION AREA) TO:
  1. ALL TRANSVERSE SUPPORTS (JOISTS, BEAMS, ANGLES, PLATES, ETC.) FOUR WELDS PER SHEET = WELD EACH SIDE OF SEAM AND AT TWO INTERMEDIATE FLUTES.
  2. ALL STEEL PARALLEL TO FLUTES AT 12"o.c.
  3. EACH FLUTE AND AT 6"o.c. AT OPENING EDGES
  4. STANDING SEAM SIDE LAPS 1-1/2" LONG TOP SEAM WELD OR BUTTON PUNCH WITH PIERCING TOOL AT 12"o.c.

2.02 TYPE "B" FORMLOK ROOF DECK
- A. ALL SHEETS TO BE 20 GAGE, 1-1/2" DEEP, AND 36" WIDE PER IAPMO ER 2018 OR EQUAL. NARROWER CLOSURE STRIPS SHALL NOT BE LESS THAN 1'-6" WIDE AND SHALL BE FASTENED TO ADJACENT FULL SHEET WITH TYPICAL SIDE SEAM ATTACHMENT.
- B. PROVIDE STEEL DECK CONFORMING TO ASTM A 653, SS GRADE 50 (MIN) WITH GALVANIZED COATING DESIGNATION G60.
- C. MINIMUM DECK PROPERTIES ARE AS FOLLOWS:
  1. YIELD STRENGTH, Fy = 50 KSI
  2. POSITIVE BENDING EFFECTIVE SECTION MODULUS (DECK TOP IN COMPR) a. +Sx = 0.230 IN^3/FT
  3. NEGATIVE BENDING EFFECTIVE SECTION MODULUS (DECK BOTTOM IN COMPR) a. -Sx = 0.237 IN^3/FT
  4. DEFLECTION a. Id = 0.219 IN^4/FT
- D. FASTEN TO STRUCTURAL FRAMING WITH HILTI X-HSN 24 AS PER ESR 2197 AT:
  1. ALL FLUTES AT TRANSVERSE SUPPORTS AND
  2. ALL STEEL MEMBERS PARALLEL TO FLUTES @ 12"o.c.
- E. FASTEN SIDE-LAPS WITH HILTI KWIK-FLEX 1/4-14 x 1" AT 12"o.c.
- F. FASTEN DECK WITH 3/4"DIA PUDDLE WELD (1/2 FUSION AREA) TO:
  1. ALL TRANSVERSE SUPPORTS (JOISTS, BEAMS, ANGLES, PLATES, ETC.) 6 WELDS PER SHEET = WELD ONE SIDE OF SEAM AND AT ALL INTERMEDIATE FLUTES.
  2. ALL STEEL PARALLEL TO FLUTES AT 18"o.c.
  3. EACH FLUTE AND AT 6"o.c. AT OPENING EDGES
  4. STANDING SEAM SIDE LAPS BUTTON PUNCH WITH PIERCING TOOL AT 24"o.c.

GANNETT FLEMING

WILSON ENGINEERS
1620 West Fountainhead Pkwy
Suite 501
Tempe, Arizona 85282
Phone: (480) 893-8860
Improving Arizona's Infrastructure Since 1942

CITY OF CHANDLER
WATER RECLAMATION FACILITY
STRUCTURAL

GENERAL STRUCTURAL NOTES 4

CITY PROJECT NO.WW1901.203
WILSON PROJECT NO. 21007

Design: SJN	Drawn: MWK	Checked: TFW
Date: 02/2022	Wilson Project No. 21007	

Rev#	Date	Description	By

VERIFY SCALES
BAR IS ONE INCH ON ORIGINAL DRAWING
0 1"
IF NOT ONE INCH ON THIS SHEET, ADJUST SCALES ACCORDINGLY

Registered Professional Engineer
CERTIFICATE NO.
35234
TIM F. WONG
Date Signed 2/24/2022
ARIZONA, U.S.A.

Sheet No. S-4

AGENCY REVIEW

GRATING AND COVER PANELS

1.01 GENERAL:
- A. PROVIDE AND INSTALL GRATING SYSTEMS WHERE NOTED ON STRUCTURAL, PROCESS, OR MECHANICAL DRAWINGS COMPLETE WITH COVER PANELS AS NOTED ON DRAWINGS AND ALL NECESSARY ACCESSORIES INCLUDING, BUT NOT LIMITED TO, EMBEDDED EDGE ANGLES, MID-SUPPORT CLIPS, AND ANCHORAGES AT SUPPORTS. PROVIDE REQUIRED SEPARATION (BEARING PADS ETC.) BETWEEN NON-COMPATIBLE MATERIALS. COORDINATE CUTOUTS AS REQUIRED FOR PIPING AND EQUIPMENT PER MECHANICAL DRAWINGS.

1.02 SUBMITTALS:
- A. SUBMIT SHOP DRAWINGS AND CALCULATIONS FOR THE GRATING AND THEIR RESPECTIVE ATTACHMENTS TO THE ENGINEER FOR REVIEW. THE DRAWINGS AND CALCULATIONS SUBMITTED FOR REVIEW SHALL BEAR THE SEAL AND SIGNATURE OF A PROFESSIONAL STRUCTURAL/CIVIL ENGINEER REGISTERED IN THE STATE IN WHICH THE SUBMITTED ITEMS WILL BE INSTALLED.

1.03 QUALITY ASSURANCE:
- A. PROVIDE SIZES, ANCHORING DETAILS, FABRICATION TOLERANCES IN ACCORDANCE WITH THE LATEST EDITION OF NAAMM METAL BAR GRATING MANUAL (ANSI/NAAMM MBG 531).
- B. PROVIDE NON-SKID TRAFFIC SURFACE THAT CONFORMS TO FEDERAL SPECIFICATION RR-G-1602A.
- C. LIMIT THE WEIGHT OF INDIVIDUAL GRATING AND COVER PANEL UNITS DESIGNATED AS REMOVABLE TO 75 POUNDS.
- D. USE ANCHORAGE DEVICES AND FASTENERS TO SECURE ALL GRATING TO SUPPORT ELEMENTS OR PREPARED OPENINGS, AS RECOMMENDED BY THE MANUFACTURER. PROVIDE REMOVABLE FASTENERS FOR GRATING AND COVER PANELS THAT ARE REMOVABLE.

2.01 STEEL MATERIAL:
- A. STEEL GRATING SHALL BE GALVANIZED CARBON STEEL BEARING BARS AND CROSS BARS WELDED TOGETHER. CROSS BARS MAY BE ROUND OR TWISTED. PROVIDE LOAD TYPE BANDING (WELD EACH BEARING BAR TO BAND BAR) CONTINUOUS ALONG EDGES AND CUTOUTS.
  1. GRATING BEARING BARS, CROSS BARS, AND BAND BARS SHALL CONFORM TO ASTM A 1011/A COMMERCIAL STEEL, TYPE 2.
  2. HOT-DIP GALVANIZE GRATING AFTER FABRICATION IN CONFORMANCE WITH ASTM A 123/A GRADE 45 (COATING NOT LESS THAN 1.8OZ/SQFT).
     - i. MAXIMUM STEEL FIBER STRESS: 18,000 PSI (UNDER LIVE LOADS).

2.02 ALUMINUM MATERIAL:
- A. PROVIDE ALLOY 6061-T6 OR ALLOY 6063-T6 CONFORMING TO ASTM B221. PROVIDE SWAGE-LOCKED CROSS BARS.
- B. WHERE ALUMINUM IS IN CONTACT WITH CONCRETE OR MASONRY SURFACES, CONTACT SURFACES SHALL BE COATED WITH HEAVY ALKALI-RESISTANT BITUMINOUS PAINT.
- C. MAXIMUM ALUMINUM FIBER STRESS: 12,000 PSI (UNDER LIVE LOADS)

2.03 FRP MATERIAL:
- A. PREMIUM GRADE, FIRE RETARDANT VINYLESTER RESIN WITH GLASS REINFORCEMENT CONSTRUCTED BY THE PULTRUSION METHOD. CONFORM FIRE RESISTANCE PROPERTIES TO ASTM E-84.
  1. ASTM D-635, SELF-EXTINGUISHING. ALL HARDWARE USED SHALL BE TYPE 316 STAINLESS STEEL.

2.04 GRATING
- A. SHALL BE DESIGNED FOR THE FOLLOWING MINIMUM LOADING REQUIREMENTS IN ACCORDANCE WITH THE BUILDING CODE. THE FOLLOWING LOADING CONDITIONS NEED NOT BE APPLIED SIMULTANEOUSLY:
- B. UNIFORMLY DISTRIBUTED LIVE LOAD - 300 PSF (WITH NO LIMIT ON DEFLECTION).
- C. CONCENTRATED LIVE LOAD - 3000 LBS ON 2.5FT X 2.5FT AREA (WITH NO LIMIT ON DEFLECTION).
- D. MAXIMUM DEFLECTION UNDER UNIFORMLY DISTRIBUTED LIVE LOAD OF 100 PSF OR CONCENTRATED LIVE LOAD OF 1000 LBS ON 1.0FT X 1.0FT AREA: 1/4" MAX OR SPAN/240, WHICHEVER IS LESS

3.01 FIELD EXECUTION:
- A. ALL GRATING SHALL BE PERMANENTLY INSTALLED BY FIELD WELDING TO ALL END BEARING AND INTERMEDIATE SUPPORTS UNLESS NOTED OTHERWISE AS REMOVABLE ON DRAWINGS. SECURE REMOVABLE GRATING TO END BEARING AND INTERMEDIATE SUPPORTS USING REMOVABLE DEVICES AND FASTENERS AS RECOMMENDED BY THE MANUFACTURER.
- B. ALL COVER PANELS SHALL BE INSTALLED AS REMOVABLE.

PRE-ENGINEERED METAL BUILDING

1.01 DESCRIPTION:
- A. THIS SECTION COVERS THE REQUIREMENTS FOR DESIGN, MATERIALS, PROPORTIONING, AND INSTALLATION OF PRE-ENGINEERED BUILDING SYSTEMS AND COMPONENTS.
- B. THE MANUFACTURER SHALL BE RESPONSIBLE FOR THE ENTIRE DESIGN OF THE PRIMARY FORCE RESISTING SYSTEM, WALLS, ROOF, FASCIAS, SUPPORT, BRACING, LATERAL ANALYSIS, ANCHORAGE TO THE FOUNDATION, AND ALL RELATED WORK. ALL JOINTS IN FLOORS, WALLS, AND ROOFS SHALL BE WEATHERPROOF.
- C. STEEL PURLIN TYPE AND SPACING AND ROOFING SELECTION (STEEL DECK OR OTHER MATERIAL) SHALL BE THE OPTION OF THE PRE-ENGINEERED BUILDING MANUFACTURER WITH APPROVAL OF THE ENGINEER.

1.02 COORDINATION:
- A. PURLINS AND OTHER ROOF FRAMING SHALL BE ABLE TO ACCOMMODATE ROOF OPENINGS, SKYLIGHTS, ETC. SHOWN ON DRAWINGS AND REQUIRED FOR HVAC DUCTS AND PIPING. COORDINATE WITH OTHER DISCIPLINES.
- B. COORDINATE OPENINGS, PENETRATIONS, AND NECESSARY EQUIPMENT SUPPORT WITH OTHER CONTRACT DOCUMENTS AND EQUIPMENT PURCHASED. PRE-ENGINEERED BUILDING MANUFACTURER SHALL DESIGN AND SUPPLY ALL REQUIRED SUBFRAMING FOR OPENINGS, INCLUDING FRAMING TO SUPPORT THE WEIGHT OF THE EQUIPMENT.
- C. PRE-ENGINEERED BUILDING MANUFACTURER SHALL DESIGN THE CANOPY ROOF AT THE BLOWER BUILDING TO SUPPORT ALL DEAD AND LIVE LOADS ASSOCIATED WITH THE MONORAIL CRANE. SEE SPECIFICATIONS FOR MORE INFORMATION ON THE MONORAIL CRANE. SEE ARCHITECTURAL AND MECHANICAL DRAWINGS FOR LOCATION AND RUN. CONTRACTOR SHALL COORDINATE MONORAIL MANUFACTURER REQUIREMENTS WITH THE PRE-ENGINEERED BUILDING MANUFACTURER.
- D. FOUNDATIONS HAVE BEEN DESIGNED BASED UPON GENERAL ASSUMPTIONS AND ARE SHOWN ON STRUCTURAL DRAWINGS. THE GENERAL CONTRACTOR SHALL VERIFY THE ACTUAL LOADS WITH THE PRE-ENGINEERED BUILDING MANUFACTURER AND SHALL HAVE THE FOUNDATION DESIGN CHECKED AND REDESIGNED IF REQUIRED. DRAWINGS AND CALCULATIONS FOR THE FOUNDATION REVIEW AND REDESIGN (IF REQUIRED) SHALL BE SEALED BY A PROFESSIONAL STRUCTURAL/CIVIL ENGINEER REGISTERED IN THE STATE IN WHICH THE SUBMITTED ITEMS WILL BE INSTALLED AND SHALL BE SUBMITTED FOR REVIEW PRIOR TO CONSTRUCTION.

1.03 SUBMITTALS:
- A. SUBMIT DESIGN CALCULATIONS AND DRAWINGS SEALED BY A PROFESSIONAL STRUCTURAL/CIVIL ENGINEER REGISTERED IN THE STATE IN WHICH THE SUBMITTED ITEMS WILL BE INSTALLED AND SHALL BE SUBMITTED FOR REVIEW PRIOR TO CONSTRUCTION. DRAWINGS SHALL SHOW ALL INFORMATION INCLUDING, BUT NOT LIMITED TO, DIMENSIONS, MEMBER SIZES AND PROPERTIES, FRAMING PLANS, CONNECTIONS AND OTHERS SECTIONS AND PERTINENT DETAILS. FABRICATE FROM REVIEWED DRAWINGS.
- B. SUBMITTAL DOCUMENTS SHALL INCLUDE DESIGN CALCULATIONS, DRAWINGS, AND ALL REACTIONS IMPARTED TO THE PRIMARY STRUCTURE FOUNDATION CORRELATED TO LOAD COMBINATIONS USED AND MANUFACTURER'S RECOMMENDED DESIGN AND DETAILS OF ANCHORAGE TO THE PRIMARY STRUCTURE.

1.04 QUALITY ASSURANCE:
- A. THE ENTIRE SYSTEM, INCLUDING THE PRIMARY FORCE RESISTING SYSTEM AND SECONDARY COMPONENTS AND CLADDING, SHALL BE DESIGNED IN ACCORDANCE WITH THE BUILDING CODE.
- B. THE PRE-ENGINEERED BUILDING SHALL BE DESIGNED TO SUPPORT SELF WEIGHT PLUS SUPERIMPOSED DEAD, LIVE, WIND, SEISMIC LOADING WHICHEVER COMBINATION PRODUCES THE MOST SEVERE CONDITIONS, IN ACCORDANCE WITH THE LATEST RECOMMENDATIONS OF THE METAL BUILDING MANUFACTURERS ASSOCIATION AND ASCE 7 MINIMUM DESIGN

2.01 MATERIALS:
- A. STEEL PURLIN TYPE AND SPACING AND STEEL DECK SELECTION SHALL BE THE OPTION OF THE PRE-ENGINEERED BUILDING MANUFACTURER WITH APPROVAL OF THE ENGINEER.

2.02 BASIS FOR DESIGN
- A. DEAD LOAD = (SELFWEIGHT AS DETERMINED BY MANUFACTURER AND SHALL INCLUDE BUT NOT BE LIMITED TO THE SELF WEIGHT OF ROOFING SYSTEM, PURLINS, INSULATION, SPRINKLERS AND THE STRUCTURAL FRAME)
- B. SUPERIMPOSED DEAD LOAD = 25 PSF (THIS LOAD SHALL NOT BE USED TO RESIST ANY UPLIFT FORCES)
  1. CEILING UNDERHUNG EQUIPMENT DEAD LOAD = 300 LBS AT HANGER SPACED AT MAXIMUM OF 5'-0"o.c. EACH WAY ON ROOF FRAMING MEMBERS.
  2. ELECTRICAL BUILDING: SUPERIMPOSED DEAD LOAD SUPPORTED BY CEILING SHALL BE = 100 PSF
- C. WIND = (SEE STRUCTURAL DESIGN PARAMETERS)
- D. SEISMIC = (SEE STRUCTURAL DESIGN PARAMETERS)
- E. DEFLECTION CRITERIA:
  1. LATERAL DRIFT: H/200 MAX AT EAVE LINE OR 3/4" MAX.
  2. COLD-FORMED METAL ROOFING AND SIDING, TOTAL LOAD DEFLECTION-L/60
  3. SECONDARY ROOF STRUCTURAL MEMBERS SUPPORTING METAL ROOFING, LIVE LOAD DEFLECTION-L/150
  4. SECONDARY WALL MEMBERS SUPPORTING METAL SIDING, DESIGN WIND LOAD DEFLECTION-L/90
  5. PRIMARY STRUCTURAL ROOF MEMBERS,
     - i. W DEFLECTION -L/180
     - ii. LIVE LOAD DEFLECTION-L/180

GUARDRAILS AND HANDRAILS

1.01 DESCRIPTION:
- A. PROVIDE AND INSTALL GUARDRAIL AND HANDRAIL SYSTEM COMPLETE WITH VERTICAL POSTS, TOP RAIL, INTERMEDIATE RAILS, HANDRAILS, TOE BOARD ("KICK PLATE"), AND BASE CONNECTION COMPONENTS AND ACCESSORIES INCLUDING, BUT NOT LIMITED TO, EMBEDDED SLEEVES OR ANCHORED PLATES.
- B. DESIGN SHALL COMPLY WITH LOCAL LIFE SAFETY AND BUILDING CODE REQUIREMENTS.
- C. FIELD WELDING OF GUARDRAIL AND HANDRAIL SYSTEM SHALL NOT BE ALLOWED UNLESS APPROVED BY THE ENGINEER.

1.02 SUBMITTALS:
- A. SUBMIT DRAWINGS AND CALCULATIONS FOR GUARDRAILS, AND THEIR RESPECTIVE ATTACHMENTS TO THE PROJECT MANAGER FOR REVIEW BY THE ENGINEER. THE DRAWINGS AND CALCULATIONS SUBMITTED FOR REVIEW SHALL BEAR THE SEAL OF A PROFESSIONAL STRUCTURAL/CIVIL ENGINEER REGISTERED IN THE STATE IN WHICH THE SUBMITTED ITEMS WILL BE INSTALLED.

1.03 QUALITY ASSURANCE:
- A. PROVIDE GUARDRAIL WITH HANDRAIL, TOEBOARD, INTERMEDIATE RAILS, AND EXTENSIONS AS SHOWN ON PLANS. PROVIDE HANDRAIL GRASPABILITY, CONTINUITY, EXTENSIONS, AND CLEARANCE IN ACCORDANCE WITH THE BUILDING CODE, AND WITH THE LATEST ADDITION OF NAAMM PIPE RAILING SYSTEM MANUAL (ANSI/NAAMM AMP 521).

1.04 MATERIAL:
- A. FRP PREMIUM GRADE, FIRE RETARDANT VINYLESTER RESIN WITH GLASS REINFORCEMENT CONSTRUCTED BY THE PULTRUSION METHOD. FIRE RESISTANCE PROPERTIES SHALL CONFORM ASTM E-84 (LESS THAN 25) AND ASTM D-635, SELF-EXTINGUISHING. ALL HARDWARE USED SHALL BE TYPE 316 STAINLESS STEEL.
- B. ALUMINUM PIPE (6061-T6) --------- Fy =35KSI AND Fb = 24KSI
- C. CARBON STEEL (A53-TYPE F)---------Fy = 25KSI Fb =18KSI

2.01 LOADING REQUIREMENTS:
- A. ATTACHMENTS AND ATTACHMENT DEVICES ARE CONSIDERED PART OF THE GUARDRAIL AND HANDRAIL SYSTEM AND MUST BE ABLE TO TRANSFER THE FOLLOWING MINIMUM LOADING REQUIREMENTS TO THE PRIMARY STRUCTURE.
  1. LINEARLY DISTRIBUTED LIVE LOAD OF 50 PLF APPLIED IN ANY DIRECTION AT THE TOP.
  2. CONCENTRATED LIVE LOAD OF 200 LBS APPLIED IN ANY DIRECTION AT ANY POINT ALONG THE TOP.
- B. DESIGN COMPONENTS OF THE GUARDRAIL SYSTEM SUCH AS INTERMEDIATE RAILS, BALUSTERS, AND PANEL FILLERS FOR THE FOLLOWING MINIMUM LOADING REQUIREMENTS IN ACCORDANCE WITH THE BUILDING CODE THIS LOADING NEED NOT APPLY SIMULTANEOUSLY WITH OTHER LIVE LOADS MENTIONED ABOVE.
  1. CONCENTRATED LIVE LOAD OF 50 LBS ON AN EQUIVALENT AREA OF 1FT X 1FT INCLUDING OPENINGS AND SPACE BETWEEN RAILS.

GANNETT FLEMING

1620 West Fountainhead Pkwy
Suite 501
Tempe, Arizona 85282
Phone: (480) 893-8860

Improving Arizona's Infrastructure Since 1942

WILSON ENGINEERS

CITY OF CHANDLER
WATER RECLAMATION FACILITY
STRUCTURAL

GENERAL STRUCTURAL NOTES 5

CITY PROJECT NO.WW1901.203
WILSON PROJECT NO. 21007

Design: SJN	Drawn: MWK	Checked: TFW
Date: 02/2022	Wilson Project No. 21007	

Rev#	Date	Description	By

VERIFY SCALES
BAR IS ONE INCH ON ORIGINAL DRAWING
0 1"
IF NOT ONE INCH ON THIS SHEET, ADJUST SCALES ACCORDINGLY

Registered Professional Engineer
CERTIFICATE NO.
35234
TIM F. WONG
Date Signed 2/24/2022
ARIZONA, U.S.A.

Sheet No. S-5

AGENCY REVIEW

*AB	ANCHOR BOLT(S)
@	(USE ONLY FOR SPACING)
A.F.F.	ABOVE FINISHED FLOOR
ABC	AGGREGATE BASE COURSE
ACI	AMERICAN CONCRETE INSTITUTE
AISC	AMERICAN INSTITUTE OF STEEL CONSTRUCTION
ALT	ALTERNATE
ALUM	ALUMINUM
APPROX	APPROXIMATELY
ARCH	ARCHITECT OR ARCHITECTURAL DOCUMENTS
ASTM	AMERICAN SOCIETY OF TESTING MATERIAL
AVG	AVERAGE
AWS	AMERICAN WELDING SOCIETY
*BM	BEAM
*BOTT	BOTTOM
BLDG	BUILDING
BLK	BLOCK
BRG	BEARING
BTWN	BETWEEN
*CIP	CAST IN PLACE
*COL	COLUMN
*CONC	CONCRETE
*CONSTR	CONSTRUCTION
C/C	CENTER TO CENTER
CALC	CALCULATIONS
CHKD PL	CHECKERED PLATE
CJ	CONTROL JOINT OR CONSTRUCTION JOINT
CL	CENTERLINE
CLG	CEILING
CLR	CLEAR
CMU	CONCRETE MASONRY UNIT
CONN	CONNECTION
CONT	CONTINUE OR CONTINUOUS
DBL	DOUBLE
DEMO	DEMOLITION
DEPR	DEPRESSION
DIA	DIAMETER
DIAG	DIAGONAL
DIM	DIMENSION
DL	DEAD LOAD
DN	DOWN
DP	DEEP OR DEPTH
DTL	DETAIL
DWG(S)	DRAWING(S)
DWL(S)	DOWEL(S)
*ELEC	ELECTRICAL
*EXP	EXPANSION
E (PSI)	MODULES OF ELASTICITY
EA	EACH
EF	EACH FACE
EJ	EXPANSION JOINT
EL	ELEVATION
EMBED	EMBEDMENT
EOD	EDGE OF DECK
EOS	EDGE OF SLAB
EQ	EQUAL
EQUIP	EQUIPMENT
ES	EACH SIDE
EW	EACH WAY
EXT	EXTERIOR
*FLR	FLOOR
FDN	FOUNDATION
FF	FAR FACE
FIN	FINISH(ED)
FLG	FLANGE
FRMG	FRAMING
FRP	FIBERGLASS REINFORCED PLASTIC
FS	FAR SIDE
FT	FOOT, FEET
FTG	FOOTING
FY	YIELD STRESS OF STEEL
GA	GAGE OR GAUGE
GALV	GALVANIZED
GSN	GENERAL STRUCTURAL NOTES
H.P.	HIGH POINT
HAS	HEADED ANCHOR STUD
HK	HOOK
HORIZ	HORIZONTAL
HS	HIGH STRENGTH
HSS	HOLLOW STRUCTURAL SECTION
HT	HEIGHT
I (IN)4	MOMENT OF INERTIA
I.F.	INSIDE FACE
ICBO	INTERNATIONAL COUNCIL OF BUILDING OFFICIALS
ID	INSIDE DIAMETER
IN	INCH
INFO	INFORMATION
INT	INTERIOR
JT	JOINT
K	KIP = 1,000 LBS
L.P.	LOW POINT
LBS	POUNDS
LG	LONG
LL	LIVE LOAD
LLH	LONG LEG HORIZONTAL
LLV	LONG LEG VERTICAL
LWC	LIGHT WEIGHT CONCRETE
*MEZZ	MEZZANINE
M.O.	MASONRY OPENING
MAINT	MAINTENANCE
MAS	MASONRY
MATL	MATERIAL
MAX	MAXIMUM
MECH	MECHANICAL
MFR	MANUFACTURER
MID	MIDDLE
MIN	MINIMUM
MISC	MISCELLANEOUS
MPE	MECHANICAL, PLUMBING AND ELECTRICAL
MTL	METAL
NAMM	NATIONAL ASSOCIATION OF ARCHITECTURAL METAL MANUFACTURERS
NF	NEAR FACE
NIC	NOT IN CONTRACT
NO, #	NUMBER
NS	NEAR SIDE
NTS	NOT TO SCALE
*OPNG	OPENING
o.c.	ON CENTER (LOWERCASE)
O.F.	OUTSIDE FACE
OD	OUTSIDE DIAMETER
OH	OVERHANG
OPP	OPPOSITE
OPP HD	OPPOSITE HAND
*PC	PRECAST (PC DOUBLE TEE, PC INVERTED TEE BEAM, ETC)
PCF	POUNDS PER CUBIC FOOT
PCI	PRESTRESSED CONCRETE INSITUTE
PEN	PENETRATION
PERP	PERPENDICULAR
PL	PLATE OR PROPERTY LINE
PLF	POUNDS PER LINEAR FOOT
PP	PANEL POINT OR PARTIAL PENETRATION
PRELIM	PRELIMINARY
PROJ	PROJECTION
PSF	POUNDS PER SQUARE FOOT
PSI	POUNDS PER SQUARE INCH
PT, P/T	POST-TENSIONED
*R	RISER (STAIR)
R.O.	ROUGH OPENING
R/W	REINFORCED WITH
RAD, R	RADIUS
REINF	REINFORCED OR REINFORCING
REQ'D	REQUIRED
RTU	ROOF TOP UNIT
*SCHED	SCHEDULE
*SOG	SLAB ON GRADE
*STL	STEEL
*STRUC	STRUCTURE OR STRUCTURAL
S.S.	STAINLESS STEEL
SGC	SAND, GRAVEL, COBBLES
SHT	SHEET
SIM	SIMILAR
SJI	STEEL JOIST INSTITUTE
SPA	SPACES
SPEC	SPECIFICATION
SQ	SQUARE
STD	STANDARD
STIFF	STIFFENER
SYMM	SYMMETRICAL
*T	TREAD (STAIR)
*TOC	TOP OF CONCRETE
*TOS	TOF OF STEEL
*TOW	TOP OF WALL
T&B	TOP AND BOTTOM
THK	THICK OR THICKNESS
TL	TOTAL LOAD
TOG	TOP OF GROUT
TYP	TYPICAL
U/S	UNDERSIDE
UBC	UNIFORM BUILDING CODE
UNO	UNLESS NOTED OTHERWISE
UT	ULTRASONIC TESTING
VERT	VERTICAL
w/	WITH (LOWERCASE)
w/o	WITHOUT (LOWERCASE)
WD	WOOD
WF	WIDE FLANGE
WP	WORK POINT
WWF	WELDED WIRE FABRIC
X-BRACE	CROSS BRACING
X-STRONG	EXTRA STRONG
XX-STRONG	DOUBLE EXTRA STRONG
#	NUMBER
%	PERCENT
&	AND
@	AT

1620 West Fountainhead Pkwy
Suite 501
Tempe, Arizona 85282
Phone: (480) 893-8860

Improving Arizona's
Infrastructure Since 1942

WILSON ENGINEERS

CITY OF CHANDLER
WATER RECLAMATION FACILITY
STRUCTURAL

ABBREVIATIONS

CITY PROJECT NO.WW1901.203
WILSON PROJECT NO. 21007

Design: SJN	Drawn: MWK	Checked: TFW
Date: 02/2022	Wilson Project No. 21007	

Rev#	Date	Description	By

VERIFY SCALES
BAR IS ONE INCH ON ORIGINAL DRAWING
0 1"
IF NOT ONE INCH ON THIS SHEET, ADJUST SCALES ACCORDINGLY



GANNETT FLEMING

Sheet No. S-6

AGENCY REVIEW

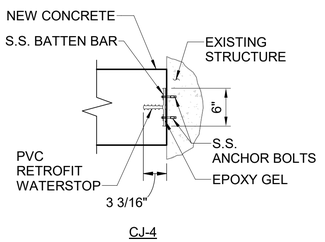

CJ-4

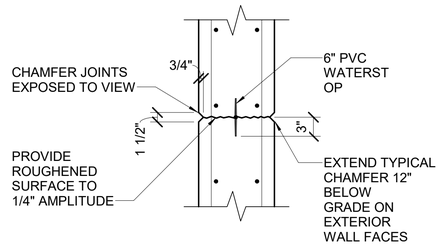

VERTICAL CJ-3 (w/ WATERSTOP)
VERTICAL CJ-3A (w/o WATERSTOP)
(PLAN VIEW)

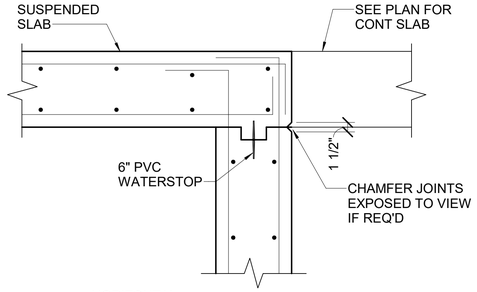

HORIZONTAL
CJ-2B

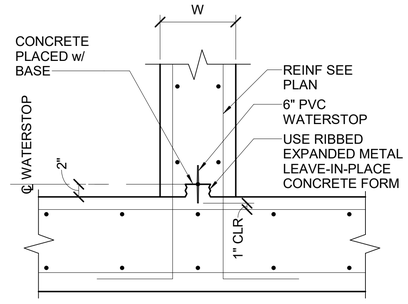

HORIZONTAL
CJ-2A

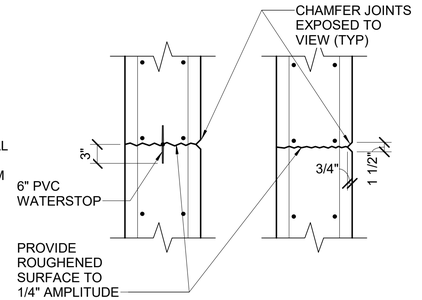

HORIZONTAL CJ-2 HORIZONTAL CJ-1

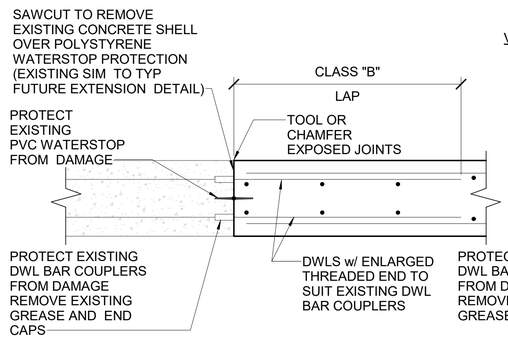

CJ-7 AT EXISTING CONCRETE HAVING PROVISION
FOR FUTURE EXTENSION w/ WATERSTOP

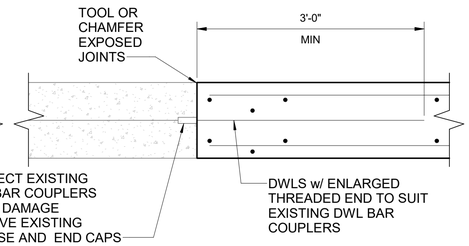

CJ-7A AT EXISTING CONCRETE HAVING PROVISION
FOR FUTURE EXTENSION w/o WATERSTOP

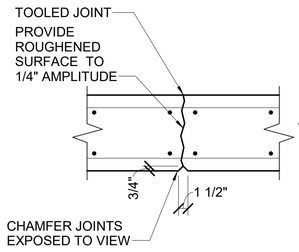

ELEVATED SLAB
CJ-6

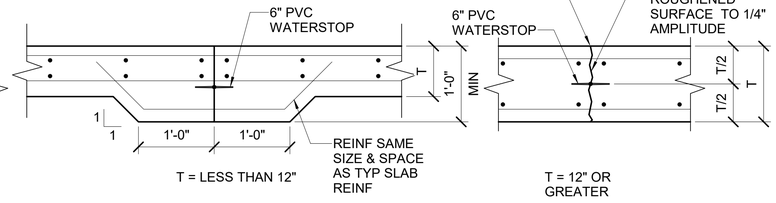

SLAB-ON-GRADE CJ-5 (w/ WATERSTOP)
SLAB-ON-GRADE CJ-5A
(w/o WATERSTOP)

NOTES:
1.) CONTINUE ALL REINFORCEMENT BARS THRU JOINTS
2.) ALL WALL VERTICAL CONSTRUCTION JOINTS TO BE CJ-3 UNO
3.) CONSTRUCTION JOINTS SHALL NOT OCCUR WITHIN THE MINIMUM LENGTH OF LAPS FOR SPLICES OF REINFORCEMENT SEE GENERAL STRUCTURAL NOTES FOR LAP SPLICE REQUIREMENTS

TYPICAL CONSTRUCTION JOINT DETAILS

DETAIL 1 / S-10

N.T.S.

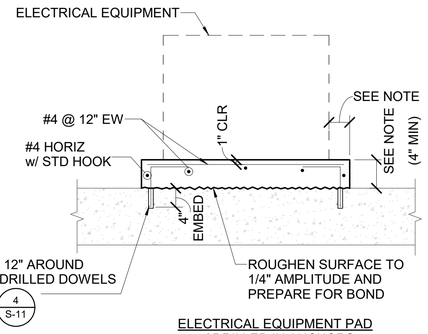

ELECTRICAL EQUIPMENT PAD
w/ DRILLED IN ANCHORS

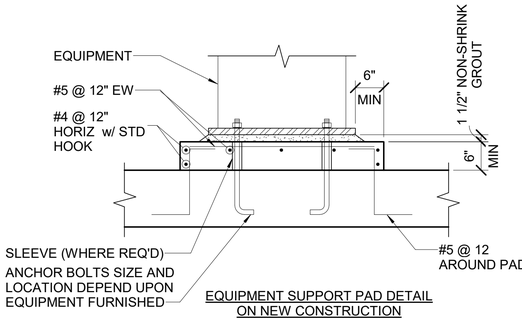

EQUIPMENT SUPPORT PAD DETAIL
ON NEW CONSTRUCTION

NOTES:
1. PROVIDE 1 1/2" NON-SHRINK GROUT UNLESS GREATER THICKNESS IS REQUIRED BY THE EQUIPMENT MANUFACTURER. REQUIREMENTS, AND WITH THE BUILDING CODE.
2. DIMENSION ELECTRICAL EQUIPMENT PADS IN CONFORMANCE WITH THE ELECTRICAL DRAWINGS, EQUIPMENT REQUIREMENTS, AND WITH THE BUILDING CODE.
3. PROVIDE CRACK CONTROL JOINTS IN EQUIPMENT PADS AS FOLLOWS.
   A. TO MATCH JOINTS IN BASE SLAB.
   B. AT SPACING NOT TO EXCEED PAD THICKNESS x 30
   C. TO DIVIDE PAD INTO RECTANGULAR PANELS WITH ASPECT RATIO NOT EXCEEDING 2:1

DETAIL 2 / S-10

N.T.S.

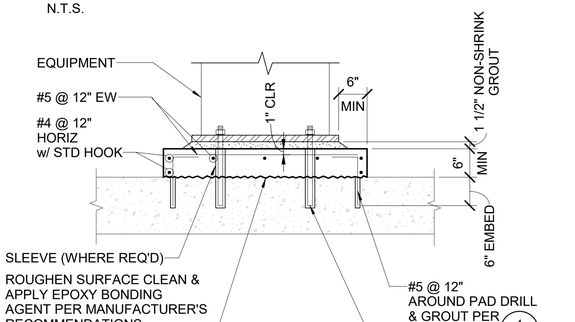

MECHANICAL EQUIPMENT
SUPPORT PAD w/ DRILLED IN
ANCHORS

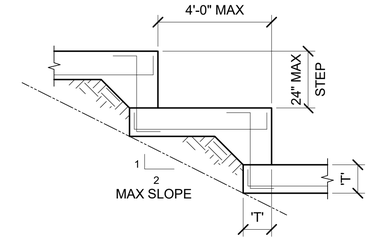

TYPE NO. 1

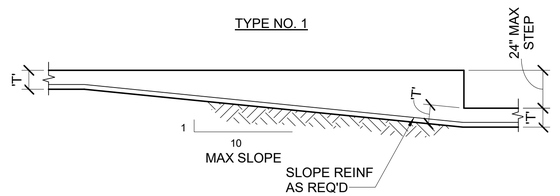

NOTE: 'T' DEPTH OF STRIP FOOTING, SEE PLAN

TYPICAL STEPPED FOOTING (WALLS)

TYPE NO. 2

DETAIL 3 / S-10

N.T.S.

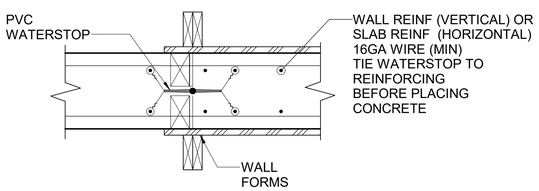

PVC WATERSTOP INSTALLATION DETAIL

DETAIL 4 / S-10

N.T.S.

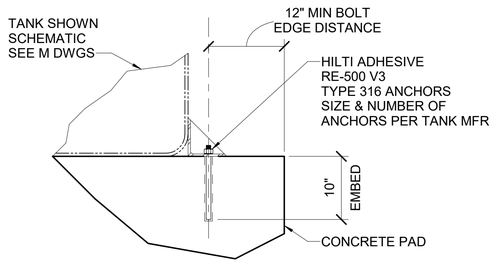

TANK ANCHORAGE TO PAD

DETAIL 5 / S-10

1" = 1'-0"

1620 West Fountainhead Pkwy
Suite 501
Tempe, Arizona 85282
Phone: (480) 893-8860

Improving Arizona's Infrastructure Since 1942

WILSON ENGINEERS

CITY OF CHANDLER
WATER RECLAMATION FACILITY
STRUCTURAL

TYPICAL DETAILS 1

CITY PROJECT NO.WW1901.203
WILSON PROJECT NO. 21007

Design: SJN	Drawn: MWK	Checked: TFW
Date: 02/2022	Wilson Project No. 21007	

Rev#	Date	Description	By

VERIFY SCALES
BAR IS ONE INCH ON ORIGINAL DRAWING
0 1"
IF NOT ONE INCH ON THIS SHEET, ADJUST SCALES ACCORDINGLY

Registered Professional Engineer
CERTIFICATE NO.
35234
TIM F. WONG
Date Signed 2/24/2022
ARIZONA, U.S.A.

GANNETT FLEMING

Sheet No. S-10

AGENCY REVIEW

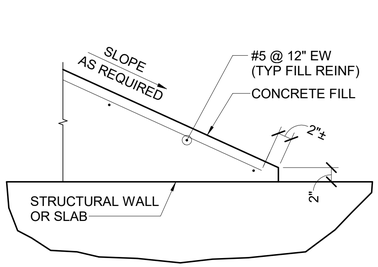

WIDE ANGLE CONCRETE FILL TERMINATION

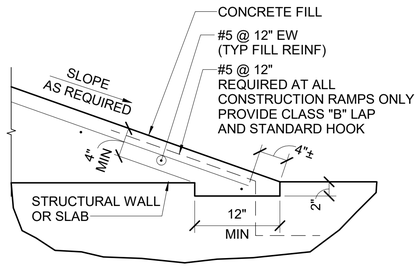

NARROW ANGLE CONCRETE FILL TERMINATION

CONCRETE FILL TERMINATION DETAILS

DETAIL 1 / S-11

N.T.S.

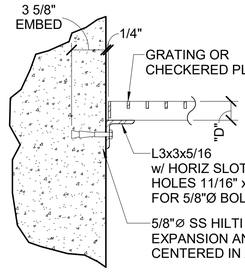

EDGE ANGLE
AT WALL

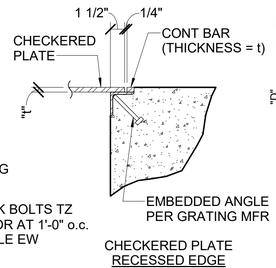

CHECKERED PLATE
RECESSED EDGE

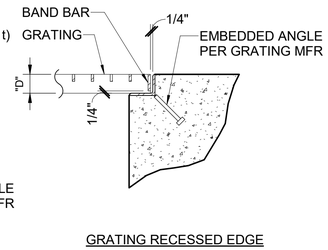

GRATING RECESSED EDGE

GRATING AND CHECKERED PLATE SUPPORT NOTES:
1. ALL NOTES AND DIMENSIONS ARE TYPICAL FOR SIMILAR CONDITIONS.
2. ALL SUPPORTS SHALL BE SAME AS GRATING OR CHECKERED PLATE MATERIALS, WHERE SUPPORTS ARE EMBEDDED IN CONCRETE, SURFACE IN CONTACT WITH CONCRETE SHALL RECEIVE COATING PER SPECIFICATIONS
3. EMBEDDED ANGLES SHALL BE FUSION WELDED AT CORNERS FULL LENGTH OF CONTACT AND FULL THICKNESS OF MATERIAL

GRATING AND CHECKERED PLATE
SUPPORT DETAILS

DETAIL 2 / S-11

N.T.S.

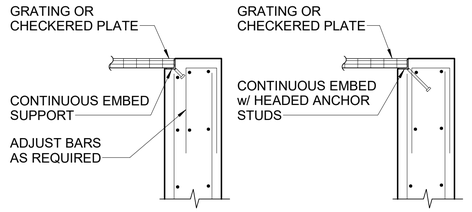

WALL REINFORCEMENT AT
CONTINUOUS EMBED

WALL REINFORCEMENT AT
INTERMITTENT EMBEDS

GRATING AND CHECKERED
PLATE SUPPORT DETAILS

DETAIL 3 / S-11

N.T.S.

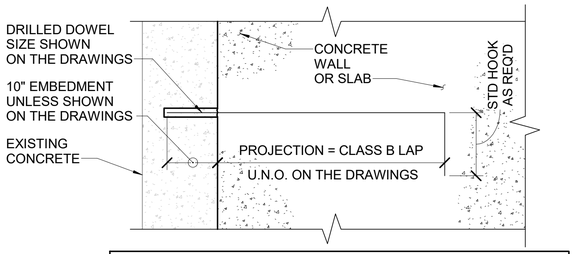

DRILLED DOWEL NOTES
1. USE ROTARY PERCUSSION DRILL TO AVOID CUTTING EXISTING REINFORCING BARS. DO NOT USE CORE DRILL.
2. DRILL HOLE DIAMETER OF SIZE PER ADHESIVE MANUFACTURER'S INSTRUCTIONS AND ICC-ES REPORT.
3. THOROUGHLY CLEAN HOLE AND INSTALL DWLS PER ADHESIVE MANUFACTURER'S INSTRUCTIONS AND ICC-ES REPORT.
4. ADHESIVE SHALL BE HILTI HIT-RE 500 V3 (ICC REPORT ESR 3814) OR APPROVED EQUAL DRILLED IN DOWEL
5. DO NOT CUT EXISTING REINFORCING.

TYPICAL POST-INSTALLED
REINFORCEMENT

DETAIL 4 / S-11

N.T.S.

NOTE:
INTERRUPTED REINFORCING BARS IN WALLS, SLAB ON GRADE & SUSPENDED SLABS CLOSEST TO CONCRETE SURFACES SHALL HAVE FULL SPAN LENGTH EXTRA REINFORCING EQUIVALENT TO THE AREA OF INTERRUPTED BARS, PLACE 1/2 THE NUMBER OF BARS ON EACH SIDE OF OPENING TOP & BOTTOM (SIZE TO MATCH TOP & BOTTOM REINFORCING)

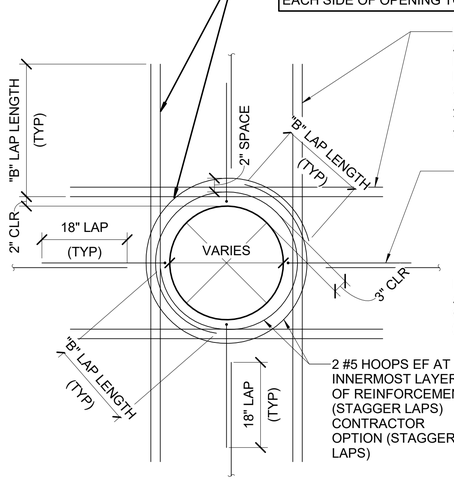

CIRCULAR
OPENING

TYPICAL OPENING
REINFORCING DETAILS

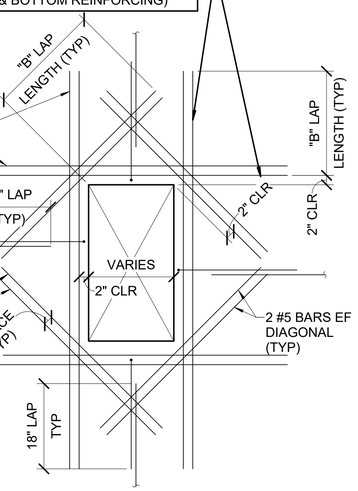

RECTANGULAR
OPENING

DETAIL 5 / S-11

N.T.S.

GANNETT FLEMING

1620 West Fountainhead Pkwy
Suite 501
Tempe, Arizona 85282
Phone: (480) 893-8860

Improving Arizona's
Infrastructure Since 1942

WILSON ENGINEERS

CITY OF CHANDLER
WATER RECLAMATION FACILITY
STRUCTURAL

TYPICAL DETAILS 2

CITY PROJECT NO.WW1901.203
WILSON PROJECT NO. 21007

Design: SJN	Drawn: MWK	Checked: TFW
Date: 02/2022	Wilson Project No. 21007	

Rev#	Date	Description	By

VERIFY SCALES
BAR IS ONE INCH ON ORIGINAL DRAWING
0 1"
IF NOT ONE INCH ON THIS SHEET, ADJUST SCALES ACCORDINGLY

Registered Professional Engineer
CERTIFICATE NO.
35234
TIM F. WONG
Date Signed 2/24/2022
ARIZONA, U.S.A.

Sheet No. S-11

AGENCY REVIEW

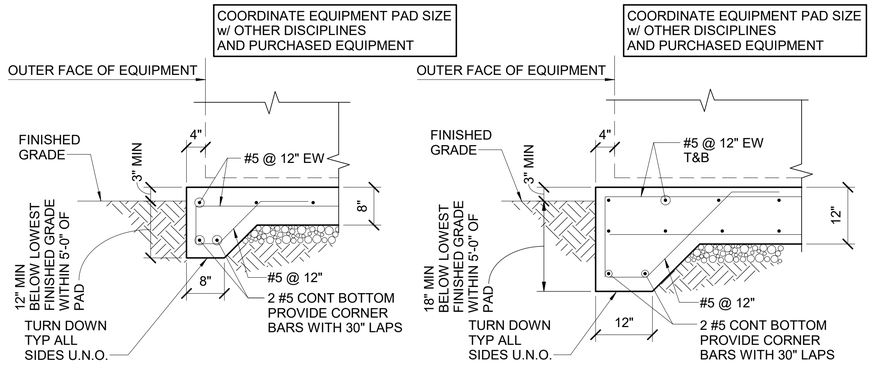

DETAIL 1 S-12

N.T.S.

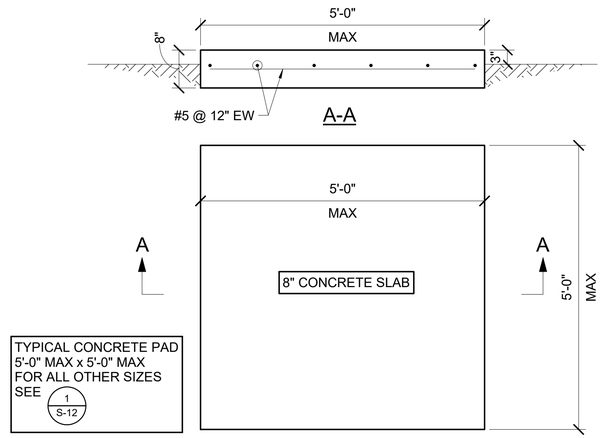

CONCRETE PAD ON GRADE

DETAIL 2 S-12

N.T.S.

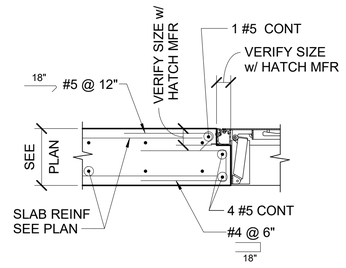

HATCH OPENING AT SLAB

DETAIL 3 S-12

N.T.S

NOTE: 1. DO NOT PROVIDE A TOE PLATE FOR 6" HIGH GUARDRAIL PROVIDE ONE RAIL AT THE TOP OF THE 6" HIGH HANDRAIL.

POST w/ EMBEDDED PIPE SLEEVE

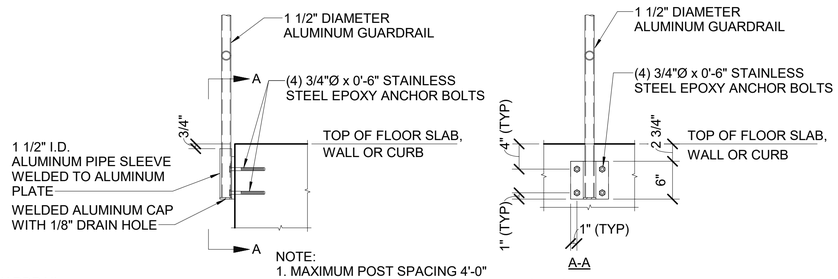

A-A

NOTE:
1. MAXIMUM POST SPACING 4'-0"
2. USE EMBEDDED OR SIDE MOUNT BASED ON LOCATIONS OF RAILINGS SHOWN ON PLANS.
3. USE HILTI HIT-RE 500 V3 ANCHORAGE SYSTEM IN ALL EXISTING CONCRETE AND NEW CONCRETE.
4. CONNECTION OF POSTS AND ANCHORAGE TO CONCRETE PER GUARDRAIL MANUFACTURER.

POST w/ SIDE MOUNTED PIPE SLEEVE

ALUMINUM GUARDRAIL (3 RAIL) MOUNTING DETAILS POST BASE/SIDE CONNECTION

DETAIL 4 S-12

1" = 1'-0"

GUARDRAIL/HANDRAIL NOTES:

1.) GUARDRAILS ARE TO PROTECT OPENINGS OR SIDES OF FLOORS & BASINS.

2.) HANDRAILS ARE A SPECIAL FORM OF GUARDRAIL, WITH DIFFERENT REQUIREMENTS USED AT STAIRS AND RAMPS.

3.) GUARDRAIL MATERIAL (I.E.. S.S., ALUM, FRP) SHALL BE AS SPECIFIED OR AS INDICATED ON THE DRAWINGS.

4.) PLACE CENTER OF GUARDRAIL 6" FROM EDGE OF CONCRETE UNLESS OTHERWISE NOTED ON THE DRAWINGS.
ALL GUARDRAIL SHALL BE FIXED UNLESS OTHERWISE INDICATED ON THE DRAWINGS.

5.) PLACE GUARDRAIL POSTS OPPOSITE EACH OTHER WHERE RAILINGS ARE PARALLEL.

6.) PROVIDE SLIP JOINT AT 24'-0" MAX CENTERS FOR EXPANSION OF RAILS & KICKPLATE LOCATE RAIL JOINT AT FACE OF POST. GAP AT TIME OF INSTALLATION SHALL BE BASED ON TEMPERATURE OF GUARDRAIL (3/8" GAP AT 25°F, 0" AT 100°f).
AT CONCRETE EXPANSION JOINTS, PROVIDE MIN OF 1" GAP IN SLIP JOINTS, BUT NOT LESS THAN CONCRETE EXPANSION JOINT. INSERT SLEEVES SHALL BE LONG ENOUGH TO ALLOW FOR FULL RANGE OF MOVEMENT.

7.) KICKPLATE MAY BE EXTRUDED OR BENT PLATE & SHALL BE ATTACHED WITH S.S. BOLTS IN 5/16" x 3/4" SLOTTED HOLES. BLOT KICKPLATE TO POST WITH BOTTOM 1/4" CLEAR FROM SURFACE. FOR SIDE MOUNTED GUARDRAIL, PROVIDE STANDARD SPACER BLOCK BETWEEN POST & KICKPLATE TO MAINTAIN 1/4" MAX CLEAR SPACING. PROVIDE KICKPLATE AT ALL PLACES WHERE DROP FROM ONE LEVEL TO ANOTHER EXCEEDS 4'-0" & WHERE INDICATED ON THE DRAWINGS. HAND TIGHTEN & CENTER PUNCH BOLT TO LOCK SPLICES SHALL ACCOMMODATE EXPANSION PER NOTE 6. OMIT KICKPLATE WHERE GUARDRAIL IS MOUNTED ON 4" CURB INSTALL KICKPLATE IN ALL OTHER LOCATIONS.

8.) MATERIAL FOR SPLICE PLATE AND KICKPLATE CHANNEL SHALL BE OF THE SAME MATERIAL AS THE GUARDRAIL.

9.) FOR GUARDRAIL MOUNTED TO BEAM OR STAIR STRINGERS, PROVIDE MANUFACTURES REINFORCED CONNECTIONS FROM PIPE POST TO PLATE. PLATE & REINFORCING INSERTS SHALL BE ALUMINUM OR S.S..

10.) SINGLE RAIL HANDRAIL AT WALL, ABOVE STAIR, SHALL BE MOUNTED AT 3'-0" HIGH, MATCHING PROFILE OF TOP RAIL ON OPPOSITE SIDE OF STAIR.

1620 West Fountainhead Pkwy
Suite 501
Tempe, Arizona 85282
Phone: (480) 893-8860

Improving Arizona's Infrastructure Since 1942

WILSON ENGINEERS

CITY OF CHANDLER
WATER RECLAMATION FACILITY
STRUCTURAL

TYPICAL DETAILS 3

CITY PROJECT NO.WW1901.203
WILSON PROJECT NO. 21007

Design: SJN	Drawn: MWK	Checked: TFW
Date: 02/2022	Wilson Project No. 21007	

Rev#	Date	Description	By

VERIFY SCALES
BAR IS ONE INCH ON ORIGINAL DRAWING
0 1"
IF NOT ONE INCH ON THIS SHEET, ADJUST SCALES ACCORDINGLY



GANNETT FLEMING

Sheet No. S-12

AGENCY REVIEW

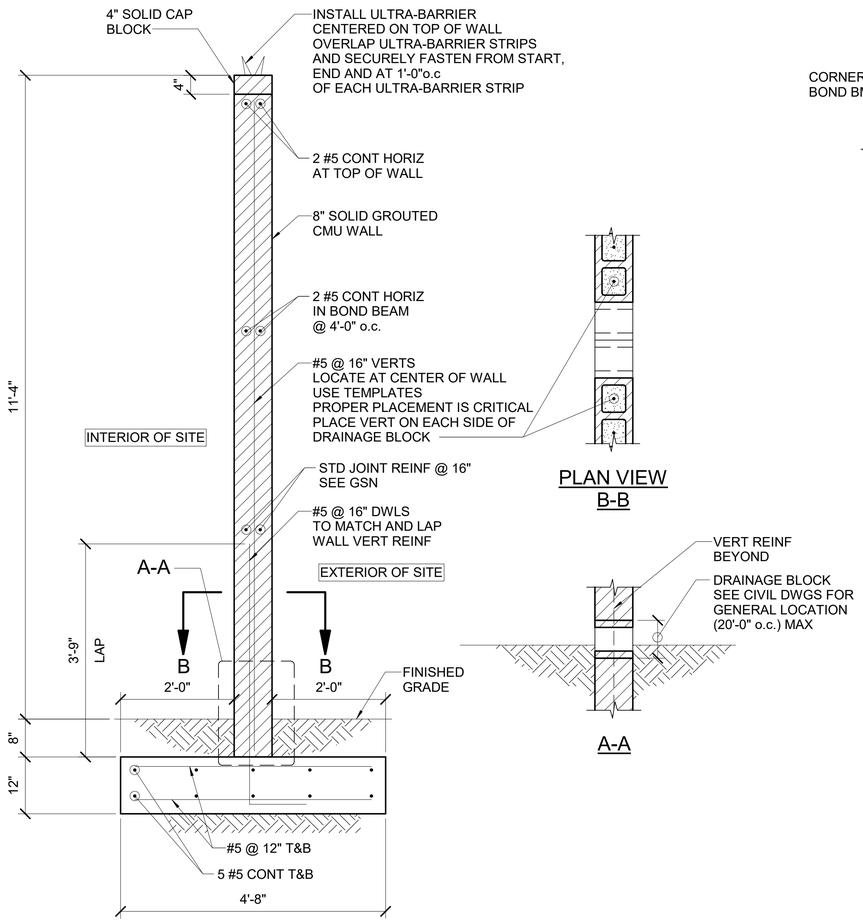

TYPICAL CMU SITE WALL

DETAIL 1 / S-13

3/4" = 1'-0"

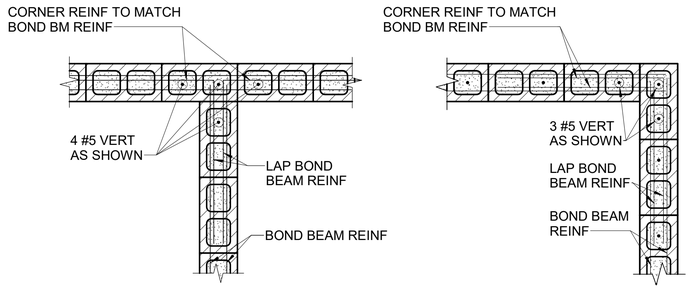

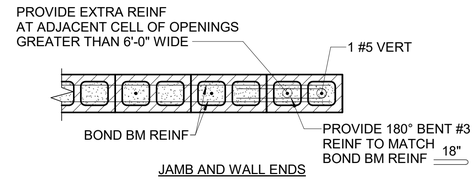

NOTES:
1. GROUT ALL MASONRY WALLS SOLID
2. PROVIDE MINIMUM #5 @ 48" VERT REINF AT CENTER OF WALL PROVIDE DWLS TO MATCH AT BASE OF WALL
3. IN ADDITION TO JOINT REINFORCING-PROVIDE 2 #5 CONT IN BOND BEAMS 8'-0" ABOVE FINISHED FLOOR AND AT THE TOP OF WALL
4. LAP REINFORCING 48 BAR DIAMETERS AT SPLICES

PLAN VIEW
TYPICAL CMU WALL REINFORCING

DETAIL 2 / S-13

N.T.S.

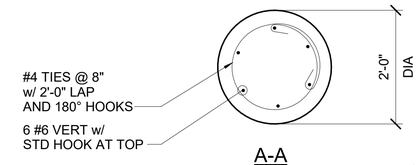

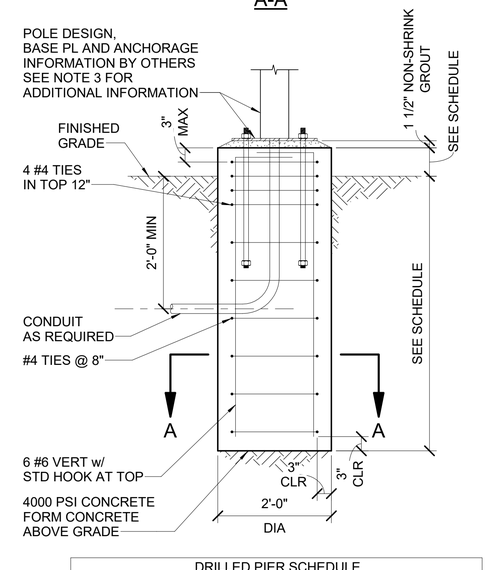

DRILLED PIER SCHEDULE			
DESCRIPTION	DEPTH OF PIER	ABOVE GRADE HEIGHT	HEIGHT
LIGHT POLE	6'-0"	3'-0"	15'-0" MAX HEIGHT

NOTES:
1. THIS DRAWING IS ONLY FOR THE CONCRETE DESIGN AND REINFORCEMENT BASED ON POLE MOUNTING HEIGHT OF 15'-0" MAX. IF A TALLER POLE IS REQUIRED, THE SIZE OF THE BASE AND REBAR SHALL BE REDESIGNED.
2. CONTRACTOR SHALL SUBMIT DESIGN AND DRAWINGS OF LIGHTING POLE AND ITS ANCHORAGE TO FOUNDATION SEALED BY A STRUCTURAL ENGINEER REGISTERED IN ARIZONA.

DRILLED PIER

DETAIL 3 / S-13

3/4" = 1'-0"

1620 West Fountainhead Pkwy
Suite 501
Tempe, Arizona 85282
Phone: (480) 893-8860
Improving Arizona's Infrastructure Since 1942

WILSON ENGINEERS

CITY OF CHANDLER
WATER RECLAMATION FACILITY
STRUCTURAL

TYPICAL DETAILS 4

CITY PROJECT NO.WW1901.203
WILSON PROJECT NO. 21007

Design: SJN	Drawn: MWK	Checked: TFW			
Date: 02/2022	Wilson Project No. 21007				
Rev#	Date	Description	By		

VERIFY SCALES
BAR IS ONE INCH ON ORIGINAL DRAWING
0 1"
IF NOT ONE INCH ON THIS SHEET, ADJUST SCALES ACCORDINGLY



Sheet No. S-13

GANNETT FLEMING

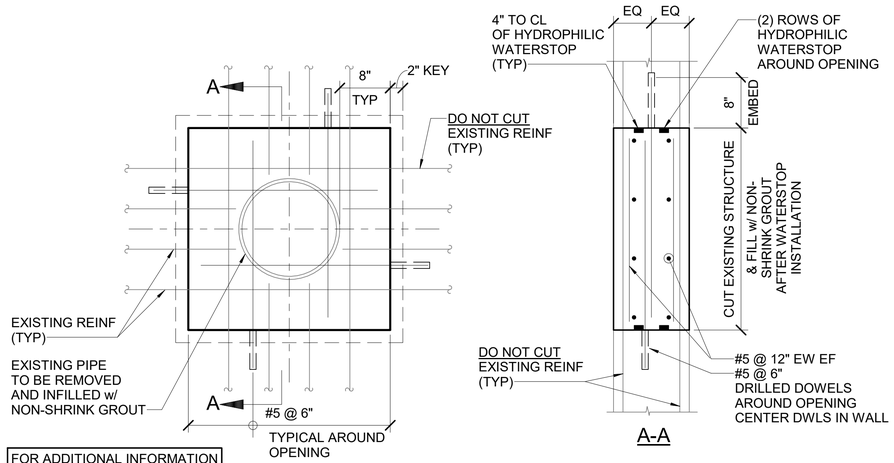

FOR ADDITIONAL INFORMATION
FOR CONCRETE CUTTING
SEE 3 / S-14

TYPICAL PIPE PENETRATION INFILL AT
EXISTING CONCRETE WALL/FLOORS

DETAIL 1 / S-14

1" = 1'-0"

EXPOSED REINFORCEMENT REPAIR PROCEDURES

1. REMOVE EXISTING CONCRETE (DIMPLE) AROUND REINFORCEMENT TO A DIAMETER OF 2.5 TIMES THE REBAR DIAMETER (1-1/2 -INCH DIAMETER MINIMUM) AND A MINIMUM DEPTH OF 1-INCH. DIMPLE SIDES SHALL BE NEAR PERPENDICULAR TO EXPOSED SURFACE FACE.
2. REMOVE/ TORCH CUT THE EXPOSED REINFORCING END TO THE BOTTOM OF DIMPLE.
3. ROUGHEN AND CLEAN DIMPLE SURFACE TO A MINIMUM SURFACE PROFILE OF +/- 1/16 INCH.
4. COAT END OF EXPOSED REINFORCEMENT WITH SIKA ARMATEC 110 EPOCEM. SIKA ARMATEC REQUIRES TWO COATS WITH A DRYING PERIOD IN-BETWEEN COATS. SEE PRODUCT LITERATURE FOR ADDITIONAL INFORMATION.
5. AFTER SECOND COAT OF SIKA ARMATEC HAS DRIED, FILL DIMPLE USING A REPAIR MORTAR SUCH AS SIKATOP 122 PLUS - HORIZONTAL. SIKATOP 123 PLUS VERTICAL AND OVERHEAD.

SURFACE PROTECTION PROCEDURES:

6. SEE OVERALL SECTION FOR EXTENT OF COATING. CONCRETE SURFACES SHALL BE CLEAN AND FREE FROM ANY DUST, LAITANCE, GREASE, AND ALL BOND-INHIBITING MATERIALS.
7. APPLY TWO COATS OF SIKAGARD 62 TO THE SURFACE OF THE CONCRETE. SEE PRODUCT LITERATURE FOR ADDITIONAL INFORMATION.

NOTES:
REFERENCE PRODUCT LITERATURE FOR SURFACE PREPARATIONS, MIXING PROCEDURE, POT LIFE, APPLICATION PROCEDURES, AND ANY ADDITIONAL INFORMATION. ANY PRODUCT SUBSTITUTIONS SHALL BE SUBMITTED TO THE ENGINEER FOR APPROVAL. PRODUCTS SHALL BE APPROVED FOR CONTACT WITH POTABLE WATER.

EXPOSED REINF REPAIR PROCEDURE DETAIL

DETAIL 2 / S-14

N.T.S.

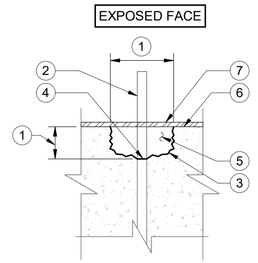

DIMPLE SECTION

SEE EXPOSED REINFORCEMENT REPAIR PROCEDURES FOR KEYNOTES

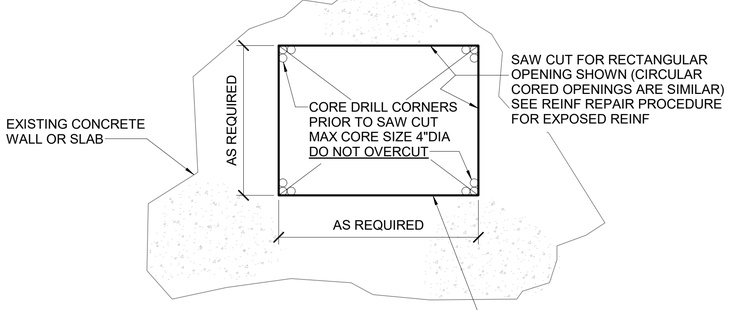

NOTES:

1. SIZES AND LOCATIONS OF ALL OPENINGS MUST BE APPROVED BY ENGINEER PRIOR TO BEGINNING CUTTING OPERATION.
2. REPAIR AND EXTEND EXISTING CONCRETE LINERS AND COATINGS TO MATCH EXISTING CONSTRUCTION.
3. RECTANGULAR OPENING IS SHOWN. PROVIDE SIMILAR PROCEDURE FOR CORED CIRCULAR OPENINGS.

OPENING IN EXISTING
CONCRETE WALL OR SLAB

DETAIL 3 / S-14

N.T.S.

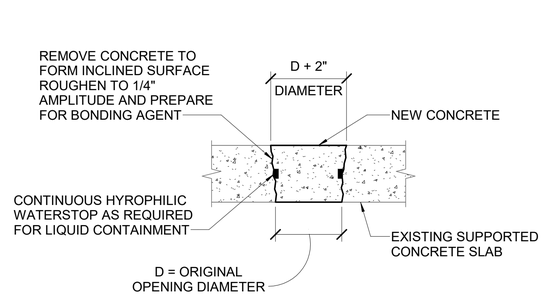

CONCRETE INFILL FOR CIRCULAR OPENING IN
SUPPORTED SLAB/WALL LESS THAN
OR EQUAL TO 12" DIAMETER

DETAIL 4 / S-14

3/4" = 1'-0"

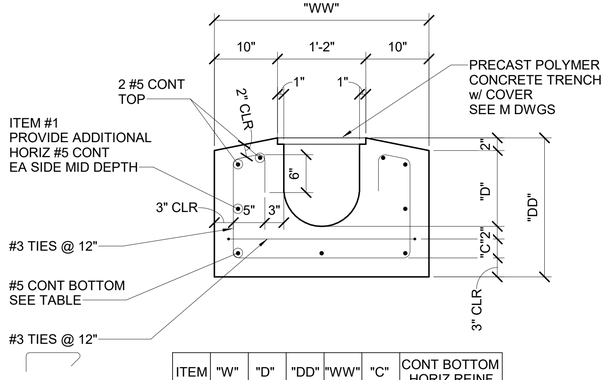

ITEM	"W"	"D"	"DD"	"WW"	"C"	CONT BOTTOM HORIZ REINF
#1	24"	22"	33"	44"	6"	(4) #5 CONT
#2	12"	12"	20"	32"	3"	(3) #5 CONT
#3	8"	12"	20"	20"	3"	(3) #5 CONT

CHEMICAL PIPING TRENCH

SEE M DWGS FOR LOCATION

DETAIL 5 / S-14

1" = 1'-0"

GANNETT FLEMING

1620 West Fountainhead Pkwy
Suite 501
Tempe, Arizona 85282
Phone: (480) 893-8860
Improving Arizona's
Infrastructure Since 1942

WILSON ENGINEERS

CITY OF CHANDLER
WATER RECLAMATION FACILITY
STRUCTURAL

TYPICAL DETAILS 5

CITY PROJECT NO.WW1901.203
WILSON PROJECT NO. 21007

Design: SJN	Drawn: MWK	Checked: TFW
Date: 02/2022	Wilson Project No. 21007	

Rev#	Date	Description	By

VERIFY SCALES
BAR IS ONE INCH ON ORIGINAL DRAWING
0 1"
IF NOT ONE INCH ON THIS SHEET, ADJUST SCALES ACCORDINGLY

Registered Professional Engineer
CERTIFICATE NO.
35234
TIM F. WONG
Date Signed 2/24/2022
ARIZONA, U.S.A.

Sheet No. S-14

AGENCY REVIEW

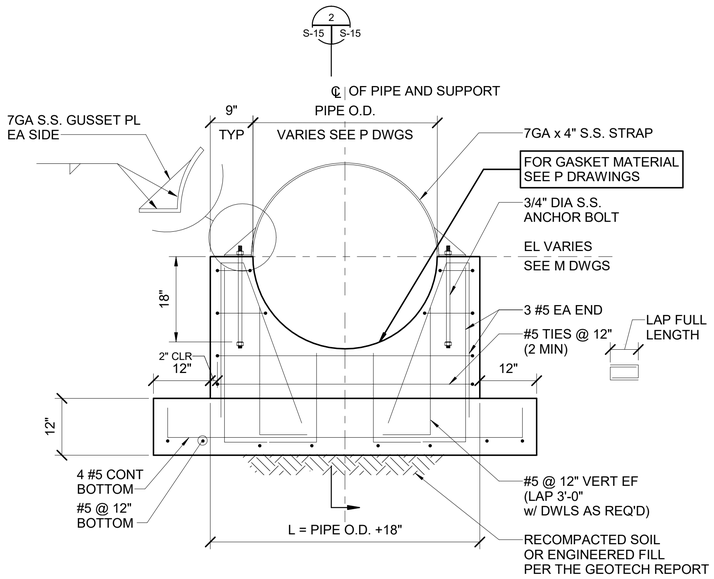

NOTE: SUPPORT TO BE 12" THICK UNLESS OTHERWISE NOTED

PIPE SUPPORT DETAIL

DETAIL 1 / S-15

3/4" = 1'-0"

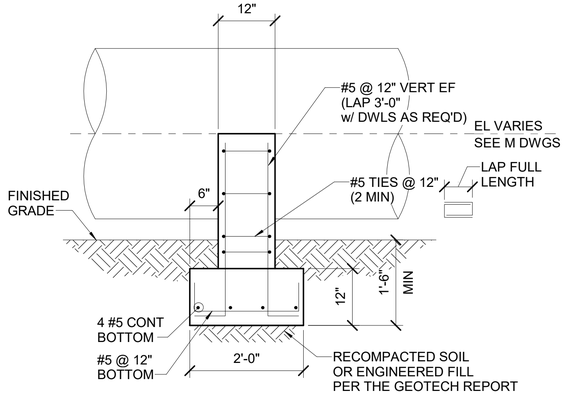

PIPE SUPPORT DETAIL

DETAIL 2 / S-15

3/4" = 1'-0"

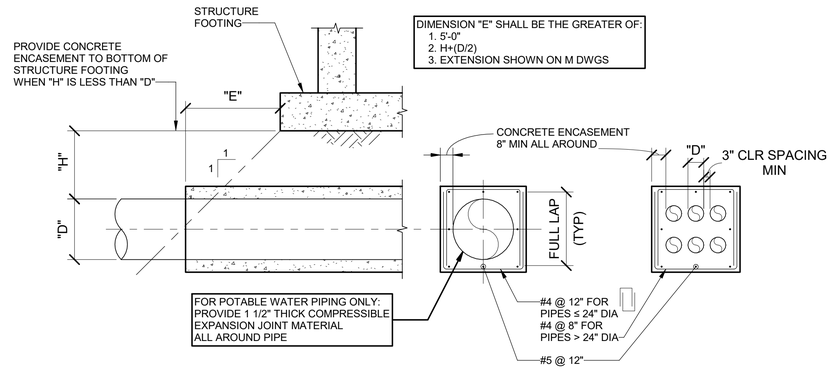

NOTES:
1. ALL PIPES, CONDUITS, ELECTRICAL LINES ETC. ARE TO BE ENCASED AS FOLLOWS:
   A. ELEMENTS WHICH ENCOMPASS A DIAMETER OF 8" EITHER BY ITSELF OR THE CO-LOCATION OF SMALLER ELEMENTS STACKED IN MULTIPLE LAYERS EQUALING 8" IN DIAMETER
   B. ELEMENTS WHEN THEY ARE LOCATED LESS THAN 2'-0" BELOW BOTTOM OF CONCRETE SLAB, FOUNDATION ETC.
2. THIS REQUIREMENT MUST TAKE INTO ACCOUNT ALL APPLICABLE CODES AND REQUIREMENTS WHERE ENCASEMENT IS NOT ALLOWED BY SAID CODES.
   A. WHERE ENCASEMENT IS NOT PERMITTED, ELEMENTS WHICH ARE REGULATED SHALL BE PLACED AS THE CODE REQUIRES FOR THAT PARTICULAR ITEM OR ITEMS. IN THOSE CASES THE ITEM WHICH MAY NOT BE ENCASED SHALL BE PLACED MORE THAN 2'-0" BELOW THE STRUCTURAL CONCRETE.
3. FOR POTABLE WATER PIPING ONLY PROVIDE 1 1/2" THICK COMPRESSIBLE EXPANSION JOINT MATERIAL ALL AROUND PIPE

REINFORCED CONCRETE PIPE
ENCASEMENT UNDER STRUCTURES

DETAIL 3 / S-15

1/4" = 1'-0"

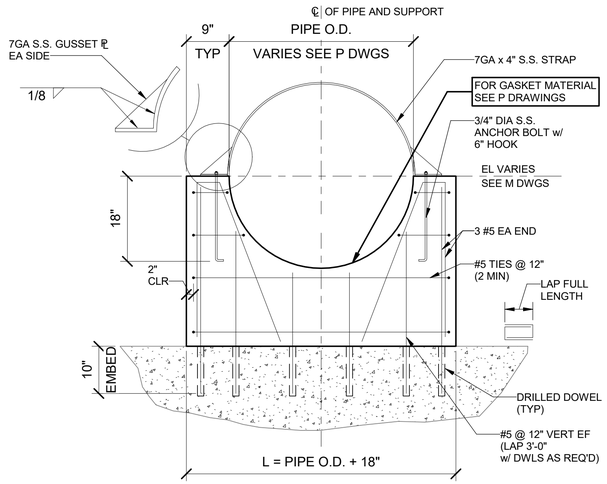

NOTE: SUPPORT TO BE 12" THICK UNLESS OTHERWISE NOTED.

PIPE SUPPORT DETAIL

DETAIL 4 / S-15

3/4" = 1'-0"

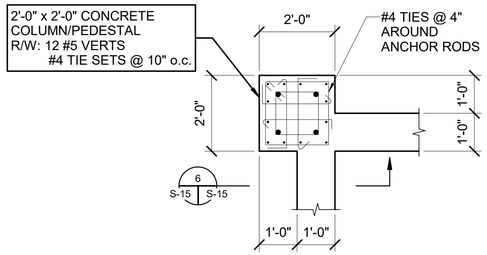

PLAN VIEW
PEDESTAL REINFORCING

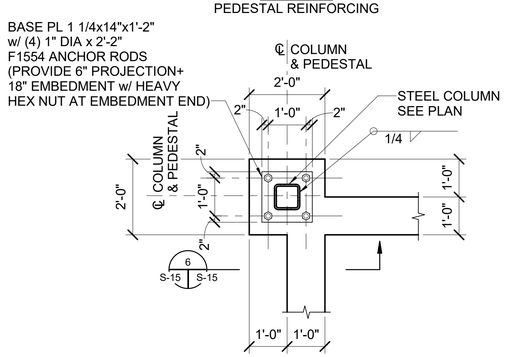

PLAN VIEW
COLUMN BASE PLATE

NOTE:
LOCATION OF ANCHOR RODS
IS CRITICAL USE TEMPLATES.
DRILL & EPOXY IS NOT AN OPTION
MIS-LOCATED ANCHOR RODS WILL
REQUIRE REMOVAL & REPLACEMENT
OF PILASTER AND SOME WALL.

DETAIL 5 / S-15

1/2" = 1'-0"

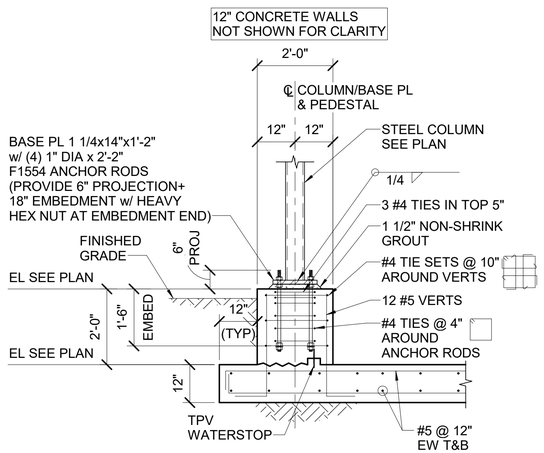

NOTE:
LOCATION OF ANCHOR RODS
IS CRITICAL USE TEMPLATES.
DRILL & EPOXY IS NOT AN OPTION
MIS-LOCATED ANCHOR RODS WILL
REQUIRE REMOVAL & REPLACEMENT
OF PILASTER AND SOME WALL.

DETAIL 6 / S-15

1/2" = 1'-0"

1620 West Fountainhead Pkwy
Suite 501
Tempe, Arizona 85282
Phone: (480) 893-8860

Improving Arizona's Infrastructure Since 1942

WILSON ENGINEERS

CITY OF CHANDLER
WATER RECLAMATION FACILITY
STRUCTURAL

TYPICAL DETAILS 6

CITY PROJECT NO.WW1901.203
WILSON PROJECT NO. 21007

Design: SJN	Drawn: MWK	Checked: TFW
Date: 02/2022	Wilson Project No. 21007	

Rev#	Date	Description	By

VERIFY SCALES
BAR IS ONE INCH ON ORIGINAL DRAWING
0 1"
IF NOT ONE INCH ON THIS SHEET, ADJUST SCALES ACCORDINGLY

Registered Professional Engineer
CERTIFICATE NO.
35234
TIM F. WONG
Date Signed 2/24/2022
ARIZONA, U.S.A.

GANNETT FLEMING

Sheet No. S-15

2/24/2022 4:02:32 PM BIM 360://068680-Wilson_Chandler-RWIF/068680_Doc_Model_S_Central_R20.rvt

AGENCY REVIEW

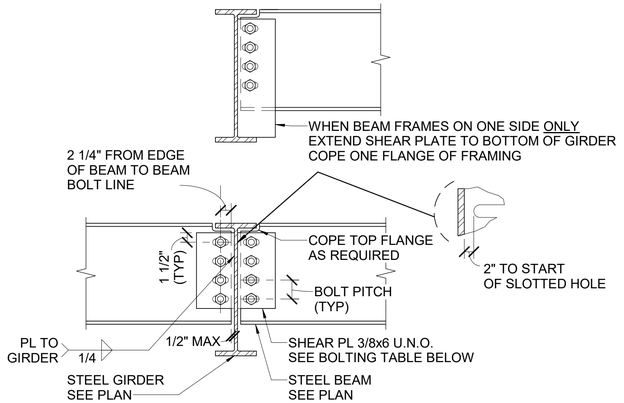

ALL HOLES IN SHEAR PLATE TO BE LONG SLOTTED HOLES

SINGLE SHEAR PLATE BOLTING TABLE									
DEPTH OF BEAM	8"	10"	12"	14"	16"	18"	21"	24"	27"
NO. 1" DIA A325N BOLTS	2	2	3	3	4	5	6	7	7

TYPICAL BEAM TO GIRDER
CONNECTION (UNO)

DETAIL 1 / S-16

1" = 1'-0"

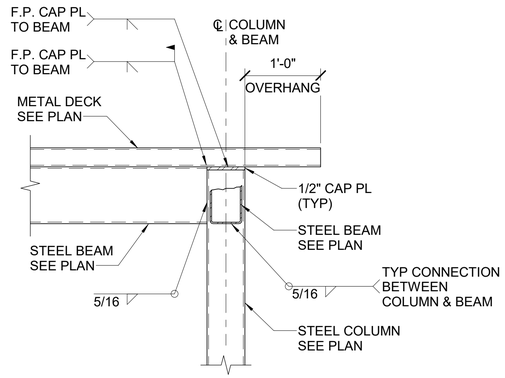

TYPICAL HSS BEAM TO COLUMN
CONNECTION (UNO)

DETAIL 2 / S-16

1" = 1'-0"

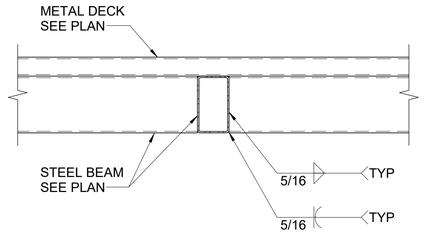

TYPICAL HSS BEAM TO BEAM
CONNECTION (UNO)

DETAIL 3 / S-16

1" = 1'-0"

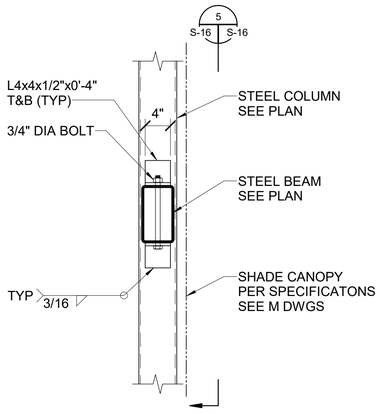

SHADE CANOPY CONNECTION

DETAIL 4 / S-16

1" = 1'-0"

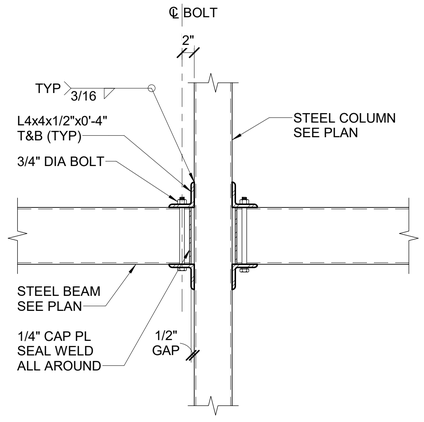

SHADE CANOPY CONNECTION

DETAIL 5 / S-16

1" = 1'-0"

1620 West Fountainhead Pkwy
Suite 501
Tempe, Arizona 85282
Phone: (480) 893-8860

Improving Arizona's
Infrastructure Since 1942

WILSON ENGINEERS

CITY OF CHANDLER
WATER RECLAMATION FACILITY
STRUCTURAL

TYPICAL DETAILS 7

CITY PROJECT NO.WW1901.203
WILSON PROJECT NO. 21007

Design:SJN	Drawn: MWK	Checked:TFW
Date: 02/2022	Wilson Project No. 21007	

Rev#	Date	Description	By

VERIFY SCALES
BAR IS ONE INCH ON ORIGINAL DRAWING
0 1"
IF NOT ONE INCH ON THIS SHEET, ADJUST SCALES ACCORDINGLY



GANNETT FLEMING

Sheet No. S-16

AGENCY REVIEW

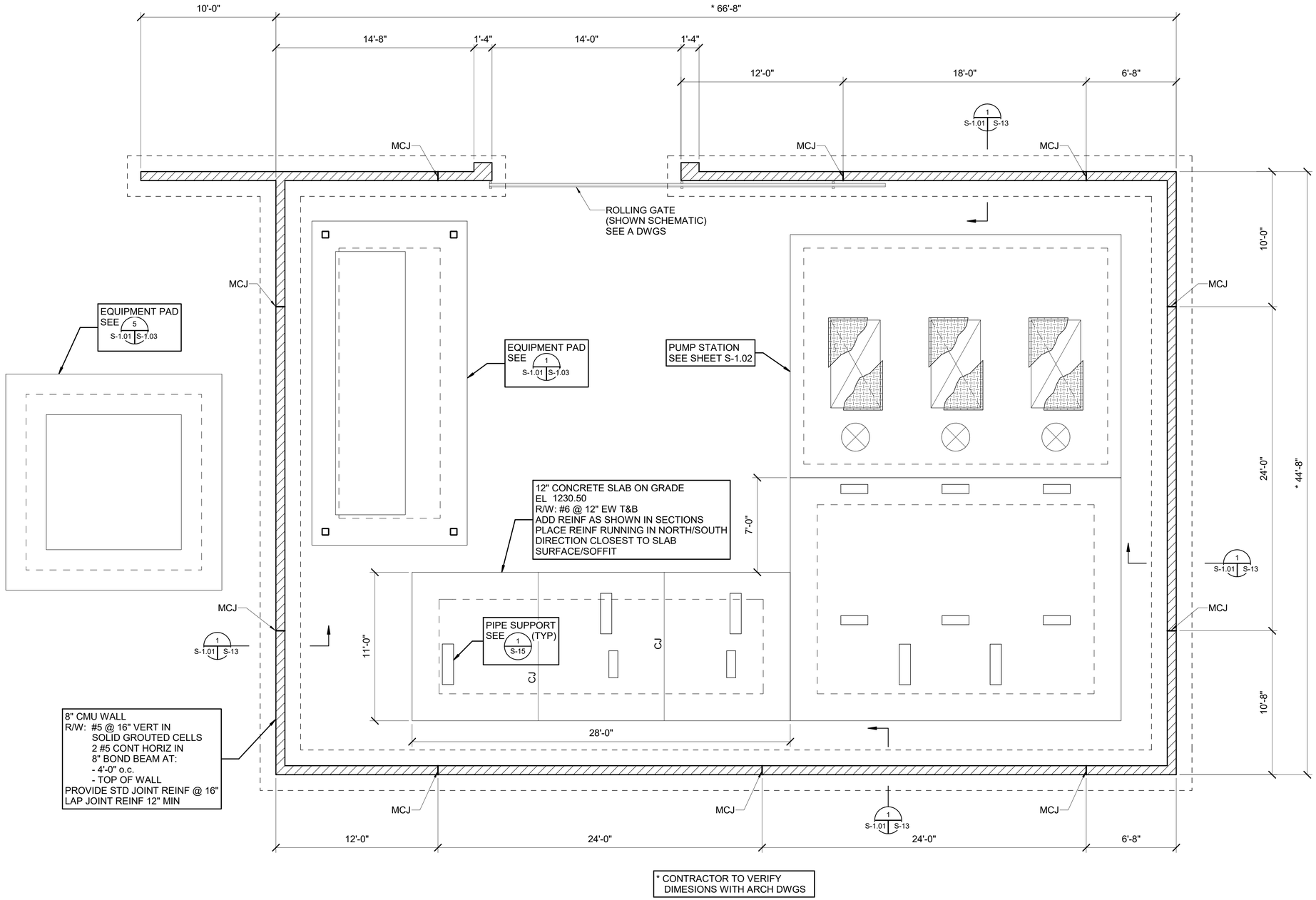

* CONTRACTOR TO VERIFY DIMESIONS WITH ARCH DWGS

PUMP STATION OVERALL PLAN

1/4" = 1'-0"

WILSON ENGINEERS
1620 West Fountainhead Pkwy
Suite 501
Tempe, Arizona 85282
Phone: (480) 893-8860
Improving Arizona's Infrastructure Since 1942

CITY OF CHANDLER
WATER RECLAMATION FACILITY
STRUCTURAL
RAW WATER PUMP STATION
OVERALL PLAN

CITY PROJECT NO.WW1901.203
WILSON PROJECT NO. 21007

Design:SJN	Drawn: MWK	Checked: TFW
Date: 02/2022	Wilson Project No. 21007	

Rev#	Date	Description	By

VERIFY SCALES
BAR IS ONE INCH ON ORIGINAL DRAWING
0 1"
IF NOT ONE INCH ON THIS SHEET, ADJUST SCALES ACCORDINGLY

Registered Professional Engineer
CERTIFICATE NO.
35234
TIM F. WONG
Date Signed 2/24/2022
ARIZONA, U.S.A.

GANNETT FLEMING

Sheet No. S-1.01

AGENCY REVIEW

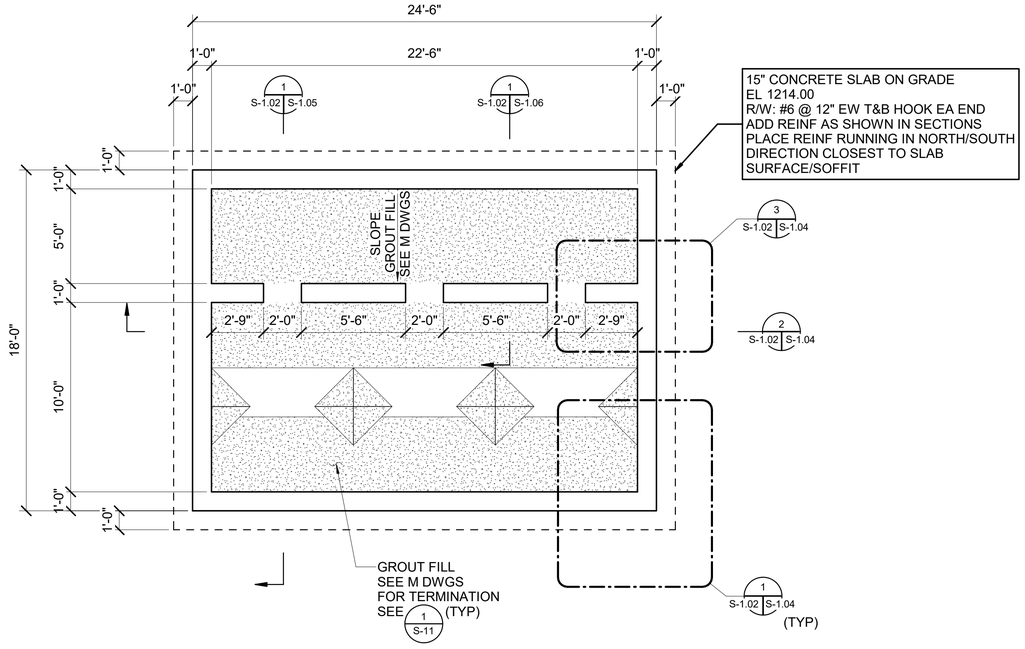

PUMP STATION LOWER PLAN

1/4" = 1'-0"

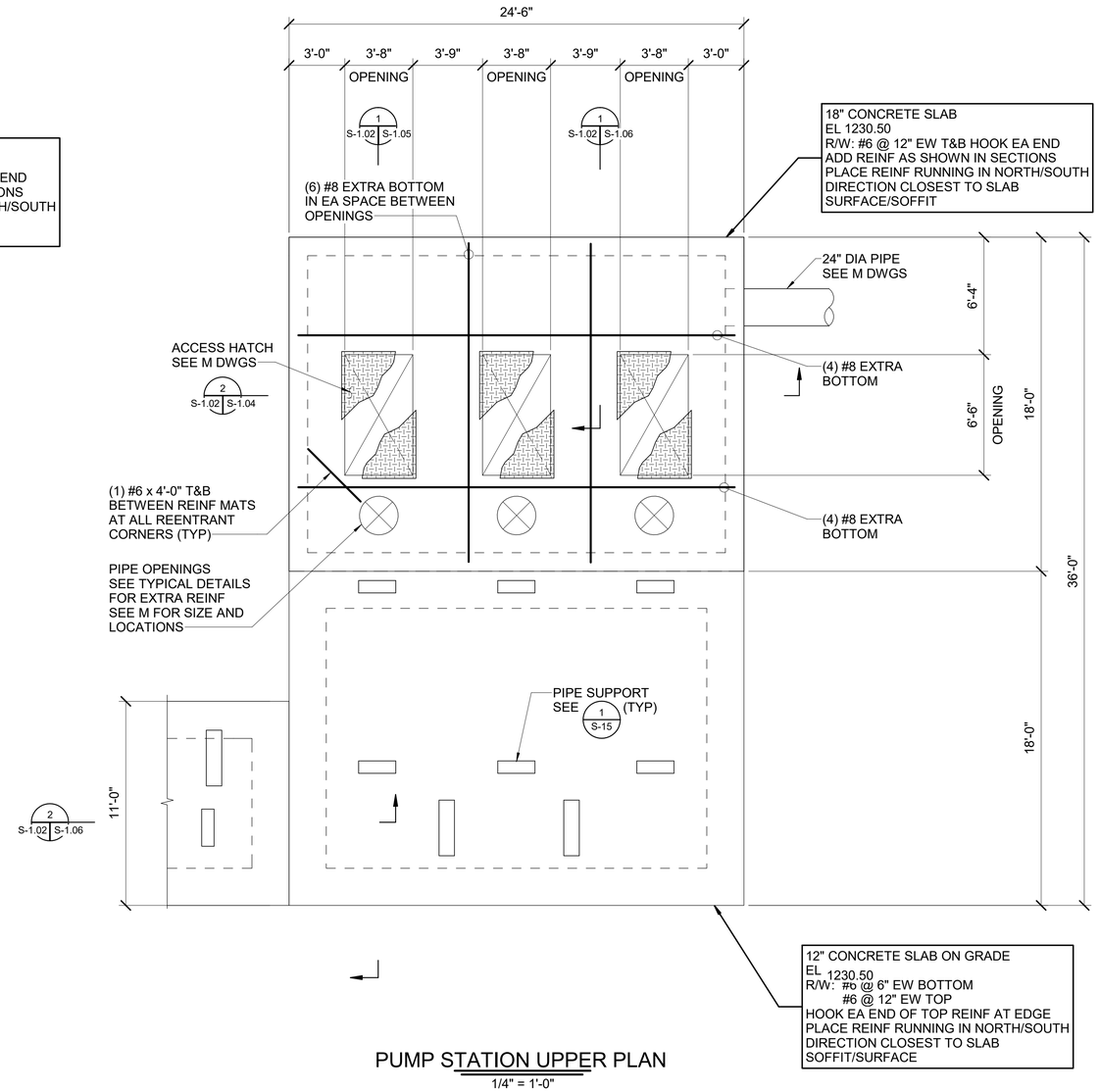

PUMP STATION UPPER PLAN

1/4" = 1'-0"

1620 West Fountainhead Pkwy
Suite 501
Tempe, Arizona 85282
Phone: (480) 893-8860

Improving Arizona's
Infrastructure Since 1942

WILSON ENGINEERS

CITY OF CHANDLER
WATER RECLAMATION FACILITY
STRUCTURAL
RAW WATER PUMP STATION
UPPER AND LOWER PLANS

CITY PROJECT NO.WW1901.203
WILSON PROJECT NO. 21007

Design: SJN	Drawn: MWK	Checked: TFW
Date: 02/2022	Wilson Project No. 21007	

Rev#	Date	Description	By

VERIFY SCALES

BAR IS ONE INCH ON ORIGINAL DRAWING

0 1"

IF NOT ONE INCH ON THIS SHEET, ADJUST SCALES ACCORDINGLY



Sheet No. S-1.02

GANNETT FLEMING

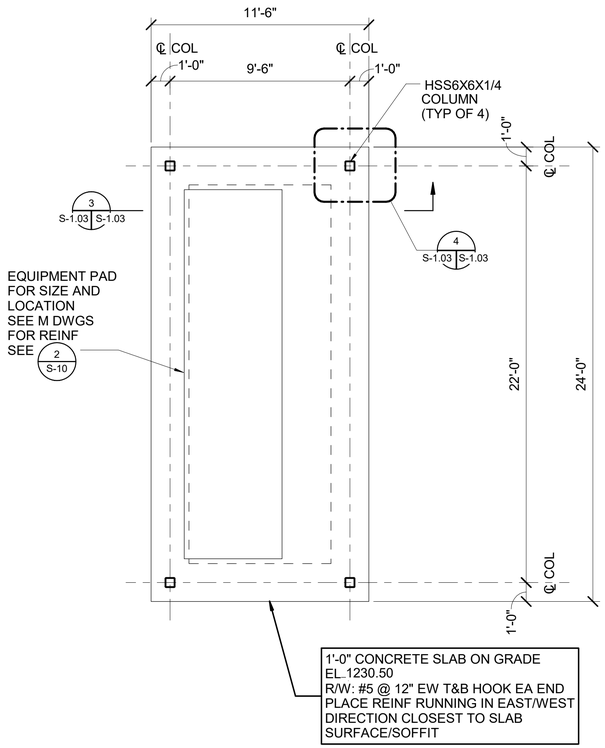

ELECTRICAL PAD
FOUNDATION PLAN

DETAIL 1 / S-1.03

1/4" = 1'-0"

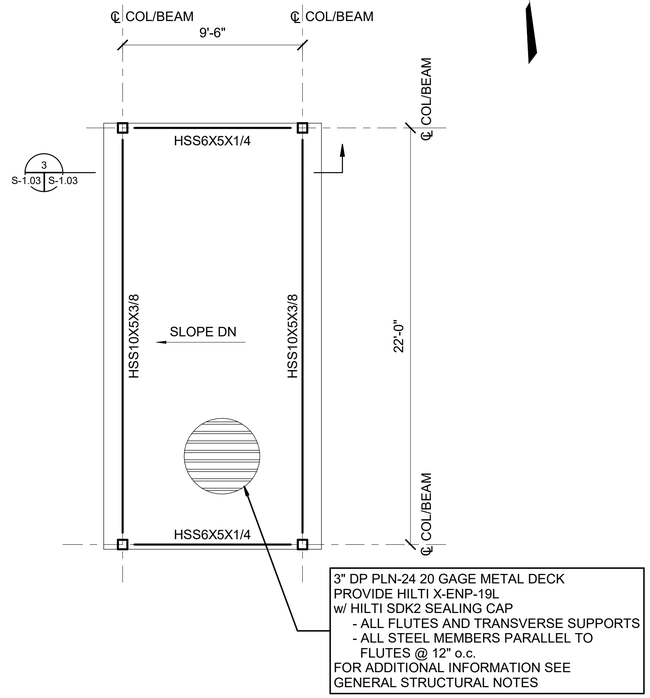

ELECTRICAL CANOPY
FRAMING PLAN

DETAIL 2 / S-1.03

1/4" = 1'-0"

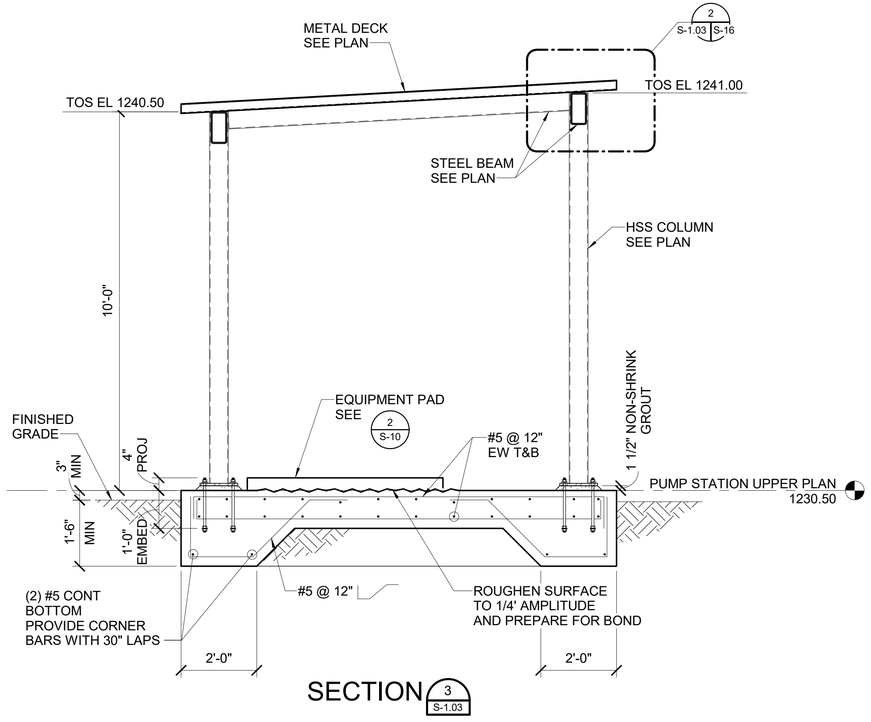

SECTION 3 / S-1.03

1/2" = 1'-0"

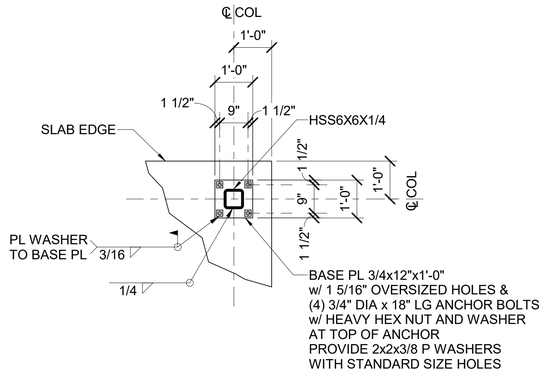

DETAIL 4 / S-1.03

1/2" = 1'-0"

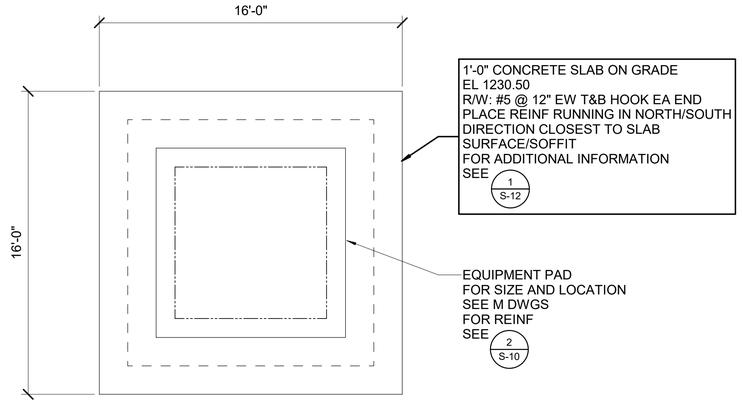

TRANSFORMER
FOUNDATION PLAN

DETAIL 5 / S-1.03

1/4" = 1'-0"

1620 West Fountainhead Pkwy
Suite 501
Tempe, Arizona 85282
Phone: (480) 893-8860
Improving Arizona's
Infrastructure Since 1942

WILSON ENGINEERS

CITY OF CHANDLER
WATER RECLAMATION FACILITY
STRUCTURAL
RAW WATER PUMP STATION
EQUIPMENT PLANS AND SECTIONS

CITY PROJECT NO.WW1901.203
WILSON PROJECT NO. 21007

Design: SJN	Drawn: MWK	Checked: TFW
Date: 02/2022	Wilson Project No. 21007	

Rev#	Date	Description	By

VERIFY SCALES
BAR IS ONE INCH ON ORIGINAL DRAWING
0 1"
IF NOT ONE INCH ON THIS SHEET, ADJUST SCALES ACCORDINGLY



Sheet No. S-1.03

GANNETT FLEMING

AGENCY REVIEW

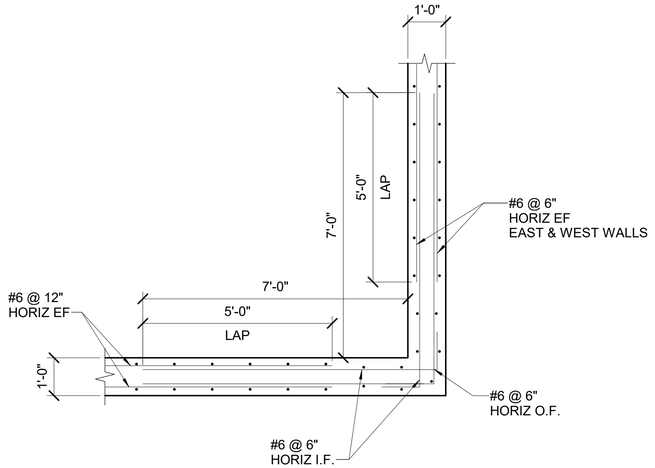

DETAIL 1 / S-1.04

1/2" = 1'-0"

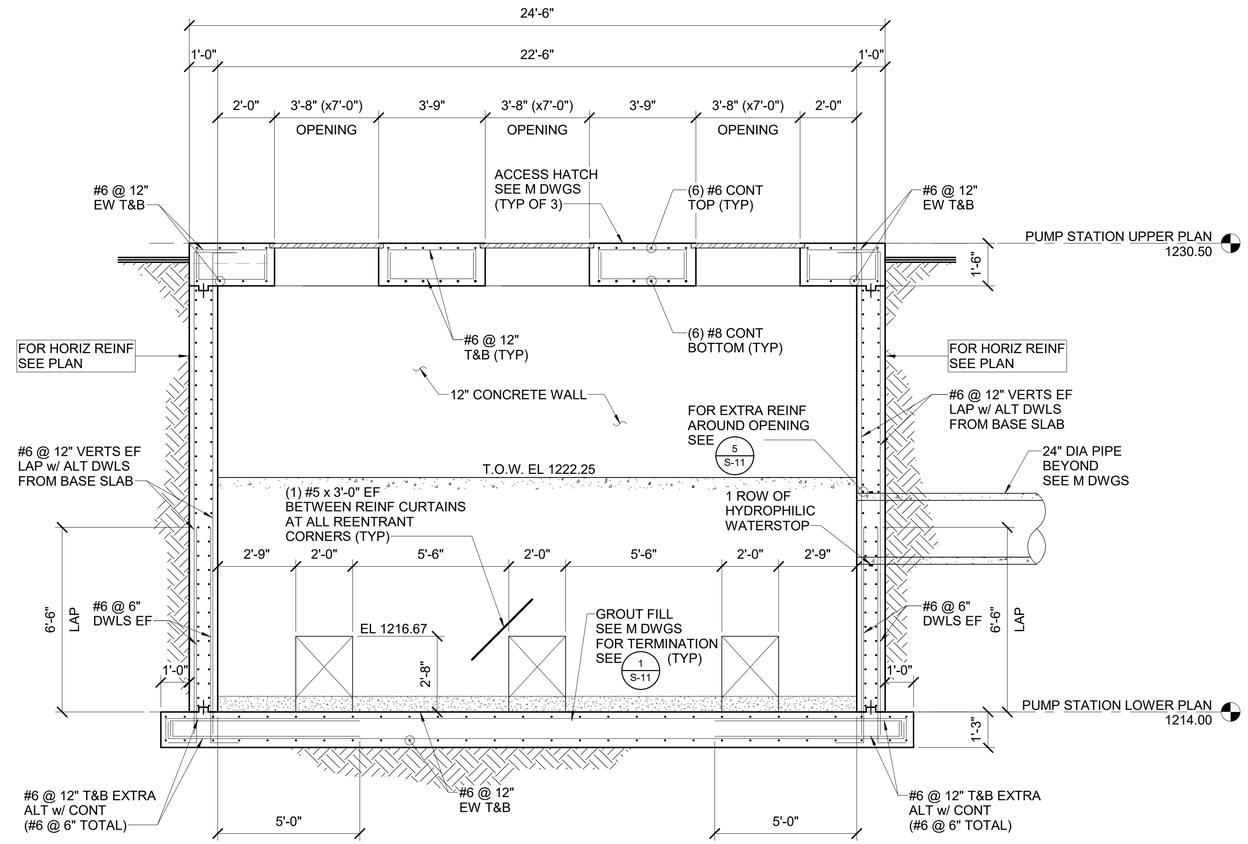

SECTION 2 / S-1.02

3/8" = 1'-0"

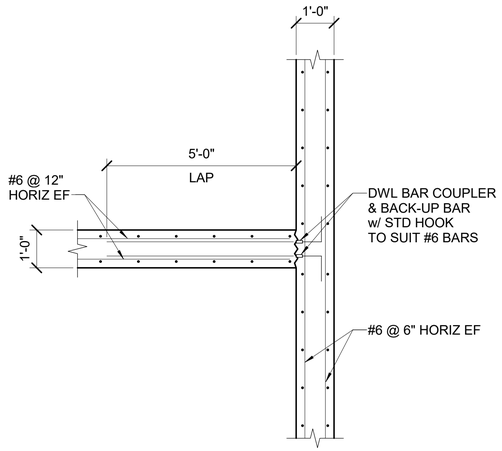

DETAIL 3 / S-1.04

1/2" = 1'-0"

1620 West Fountainhead Pkwy
Suite 501
Tempe, Arizona 85282
Phone: (480) 893-8860

Improving Arizona's
Infrastructure Since 1942

WILSON ENGINEERS

CITY OF CHANDLER
WATER RECLAMATION FACILITY
STRUCTURAL
RAW WATER PUMP STATION
SECTIONS AND DETAILS 1

CITY PROJECT NO. WW1901.203
WILSON PROJECT NO. 21007

Design: SJN	Drawn: MWK	Checked: TFW
Date: 02/2022	Wilson Project No. 21007	

Rev#	Date	Description	By

VERIFY SCALES
BAR IS ONE INCH ON ORIGINAL DRAWING
0 1"
IF NOT ONE INCH ON THIS SHEET, ADJUST SCALES ACCORDINGLY



Sheet No. S-1.04

GANNETT FLEMING

AGENCY REVIEW

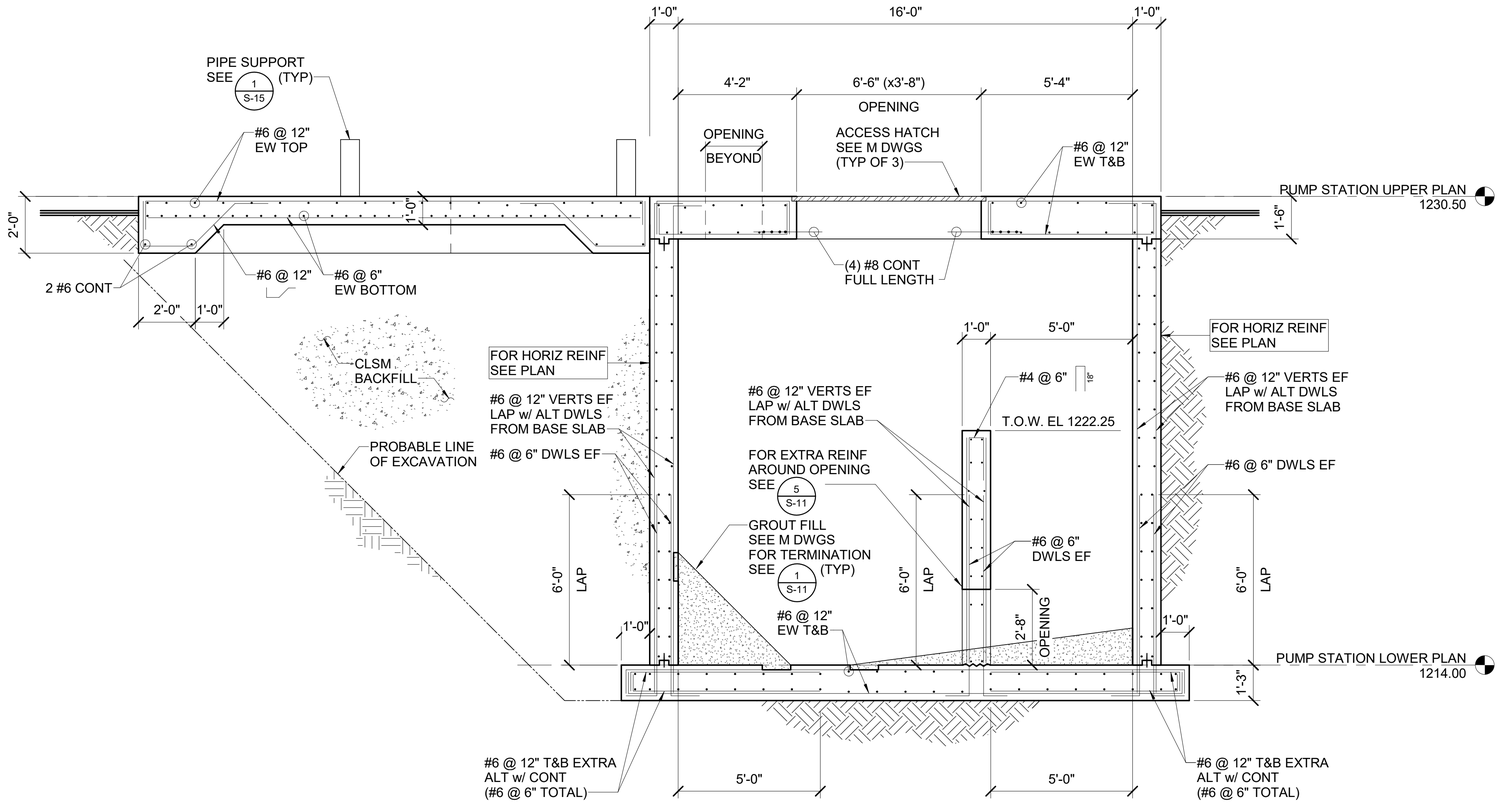

SECTION 1 S-1.02

3/8" = 1'-0"

1620 West Fountainhead Pkwy
Suite 501
Tempe, Arizona 85282
Phone: (480) 893-8860

Improving Arizona's Infrastructure Since 1942

WILSON ENGINEERS

CITY OF CHANDLER
WATER RECLAMATION FACILITY
STRUCTURAL
RAW WATER PUMP STATION
SECTIONS AND DETAILS 2

CITY PROJECT NO. WW1901.203
WILSON PROJECT NO. 21007

Design: SJN	Drawn: MWK	Checked: TFW
Date: 02/2022	Wilson Project No. 21007	

Rev#	Date	Description	By

VERIFY SCALES

BAR IS ONE INCH ON ORIGINAL DRAWING

0 1"

IF NOT ONE INCH ON THIS SHEET, ADJUST SCALES ACCORDINGLY

Registered Professional Engineer
CERTIFICATE NO.
35234
TIM F. WONG
Date Signed 2/24/2022
ARIZONA, U.S.A.

GANNETT FLEMING

Sheet No. S-1.05

AGENCY REVIEW

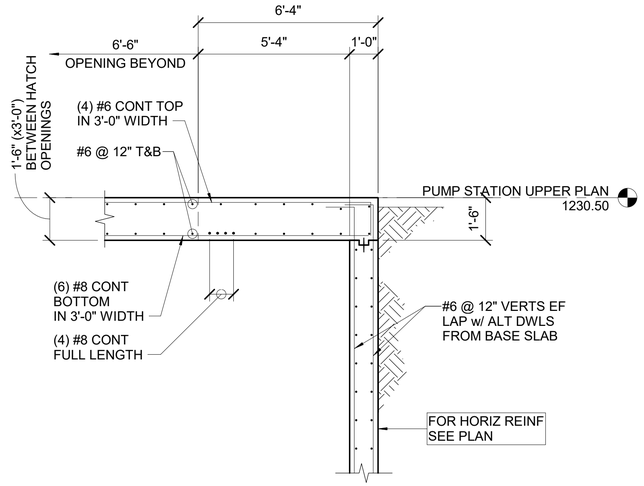

SECTION 1 S-1.02

3/8" = 1'-0"

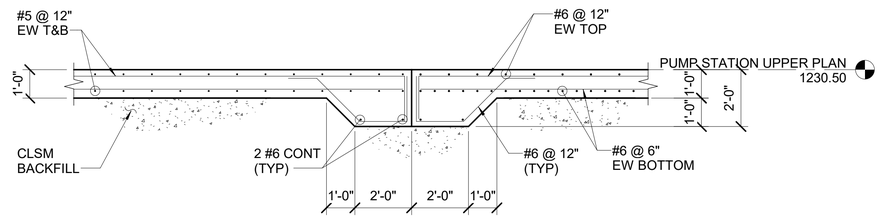

SECTION 2 S-1.02

3/8" = 1'-0"

1620 West Fountainhead Pkwy
Suite 501
Tempe, Arizona 85282
Phone: (480) 893-8860

Improving Arizona's
Infrastructure Since 1942

WILSON ENGINEERS

CITY OF CHANDLER
WATER RECLAMATION FACILITY
STRUCTURAL
RAW WATER PUMP STATION
SECTIONS AND DETAILS 3

CITY PROJECT NO. WW1901.203
WILSON PROJECT NO.

Design: SJN	Drawn: MWK	Checked: TFW
Date: 02/2022	Wilson Project No.	

Rev#	Date	Description	By

VERIFY SCALES
BAR IS ONE INCH ON ORIGINAL DRAWING
0 1"
IF NOT ONE INCH ON THIS SHEET, ADJUST SCALES ACCORDINGLY

Registered Professional Engineer
CERTIFICATE NO.
35234
TIM F. WONG
Date Signed 2/24/2022
ARIZONA, U.S.A.

Sheet No. S-1.06

GANNETT FLEMING

AGENCY REVIEW

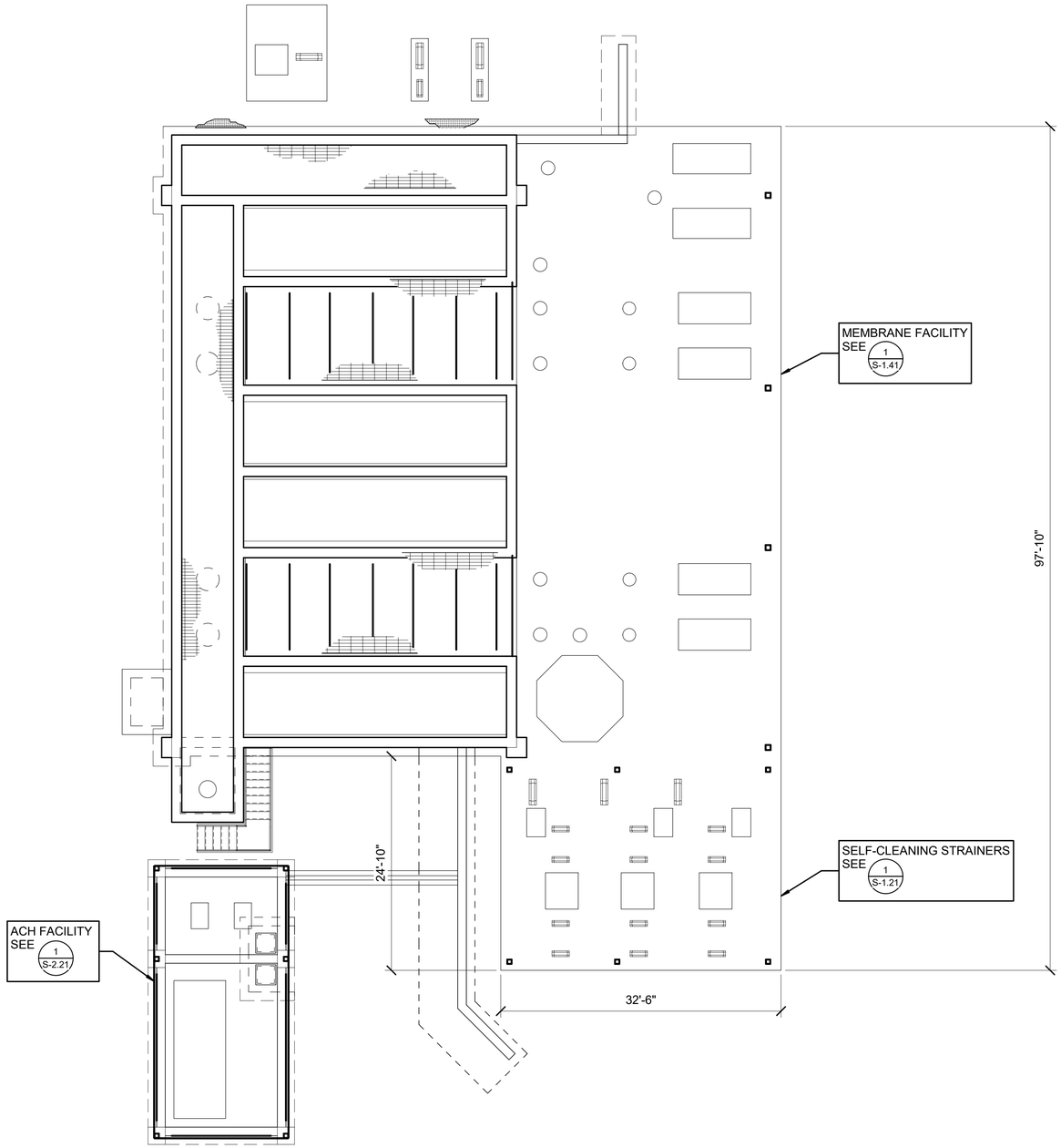

MEMBRANE FACILITY OVERALL PLAN

1/8" = 1'-0"

WILSON ENGINEERS

1620 West Fountainhead Pkwy
Suite 501
Tempe, Arizona 85282
Phone: (480) 893-8860

Improving Arizona's
Infrastructure Since 1942

CITY OF CHANDLER
WATER RECLAMATION FACILITY
STRUCTURAL
MEMBRANE FACILITY AND SELF-CLEANING STRAINERS OVERALL PLAN

CITY PROJECT NO. WW1901.203
WILSON PROJECT NO. 21007

Design: SJN	Drawn: MWK	Checked: TFW
Date: 02/2022	Wilson Project No. 21007	

Rev#	Date	Description	By

VERIFY SCALES

BAR IS ONE INCH ON ORIGINAL DRAWING

0 1"

IF NOT ONE INCH ON THIS SHEET, ADJUST SCALES ACCORDINGLY



GANNETT FLEMING

Sheet No. S-1.20

AGENCY REVIEW

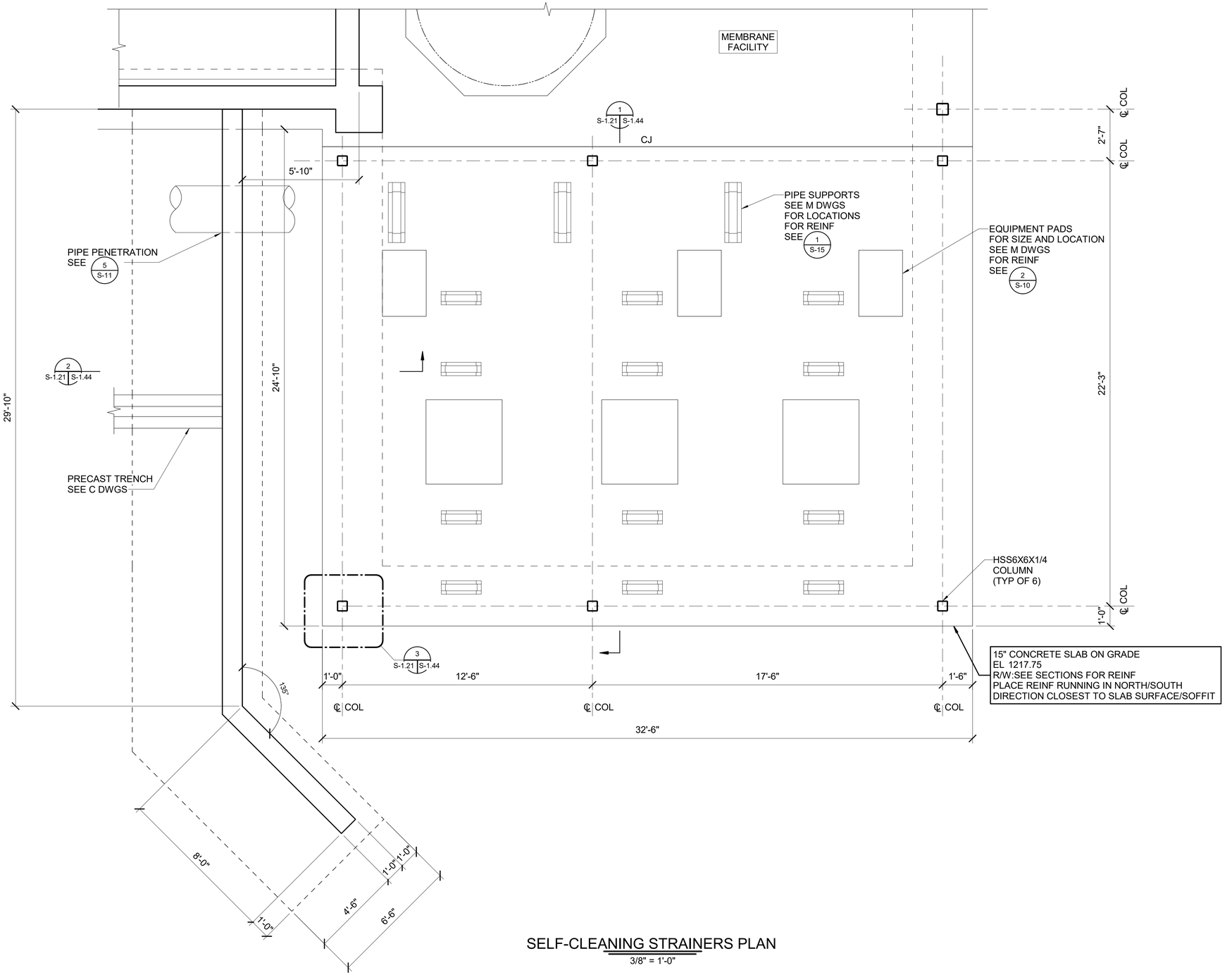

SELF-CLEANING STRAINERS PLAN

3/8" = 1'-0"

1620 West Fountainhead Pkwy
Suite 501
Tempe, Arizona 85282
Phone: (480) 893-8860

Improving Arizona's Infrastructure Since 1942

WILSON ENGINEERS

CITY OF CHANDLER
WATER RECLAMATION FACILITY
STRUCTURAL
SELF-CLEANING STRAINERS
LOWER PLAN

CITY PROJECT NO.WW1901.203
WILSON PROJECT NO. 21007

Design: SJN	Drawn: MWK	Checked: TFW
Date: 02/2022	Wilson Project No. 21007	

Rev#	Date	Description	By

VERIFY SCALES

BAR IS ONE INCH ON ORIGINAL DRAWING

0 1"

IF NOT ONE INCH ON THIS SHEET, ADJUST SCALES ACCORDINGLY

Registered Professional Engineer
CERTIFICATE NO.
35234
TIM F. WONG
Date Signed 2/24/2022
ARIZONA, U.S.A.

GANNETT FLEMING

Sheet No. S-1.21

AGENCY REVIEW

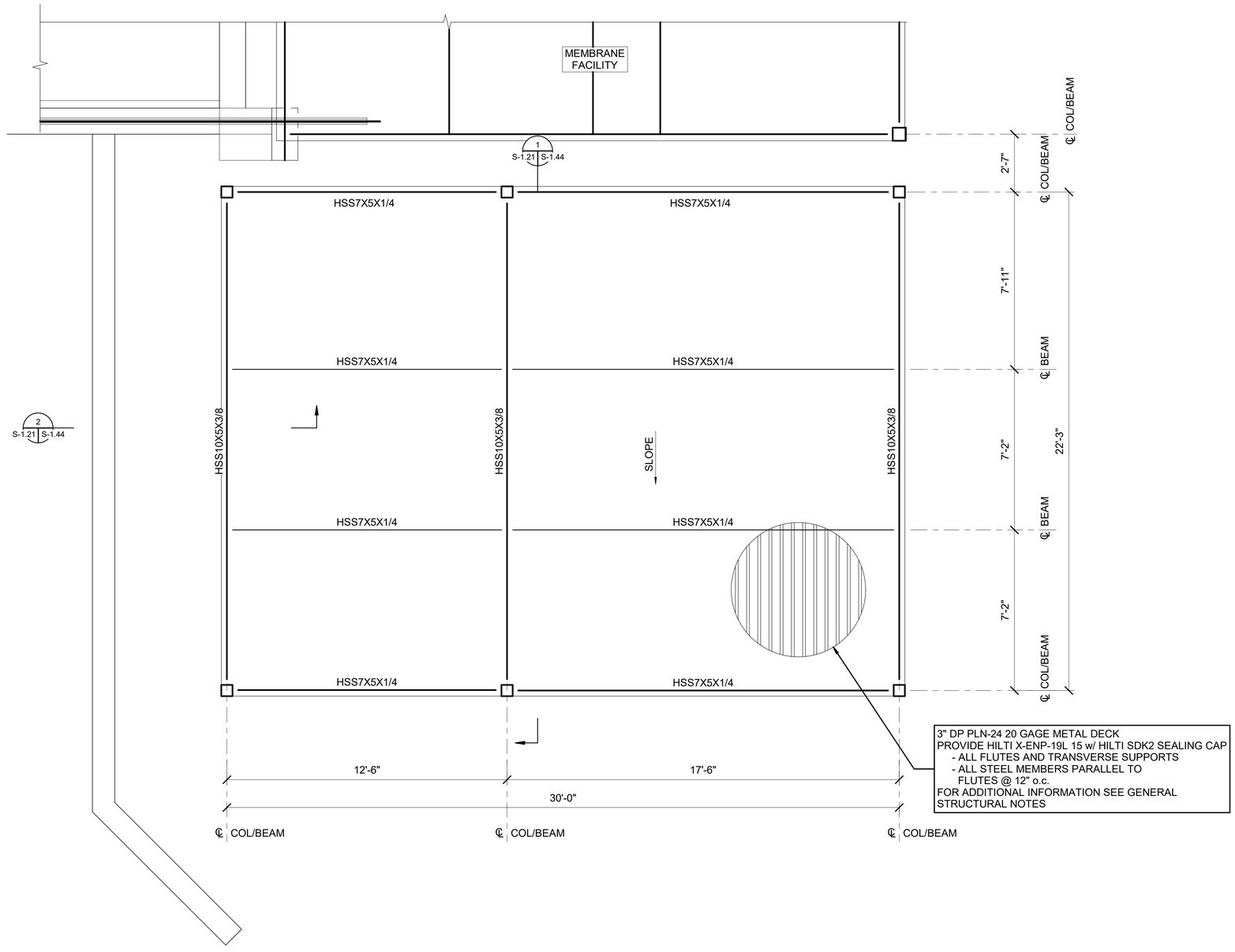

SELF-CLEANING STRAINERS CANOPY PLAN

3/8" = 1'-0"

1620 West Fountainhead Pkwy
Suite 501
Tempe, Arizona 85282
Phone: (480) 893-8860

Improving Arizona's Infrastructure Since 1942

WILSON ENGINEERS

CITY OF CHANDLER
WATER RECLAMATION FACILITY
STRUCTURAL
SELF-CLEANING STRAINERS
CANOPY PLAN

CITY PROJECT NO.WW1901.203
WILSON PROJECT NO. 21007

Design: SJN | Drawn: MWK | Checked: TFW
Date: 02/2022 | Wilson Project No. 21007

Rev#	Date	Description	By

VERIFY SCALES
BAR IS ONE INCH ON ORIGINAL DRAWING
0 1"
IF NOT ONE INCH ON THIS SHEET, ADJUST SCALES ACCORDINGLY



GANNETT FLEMING

Sheet No. S-1.22

AGENCY REVIEW

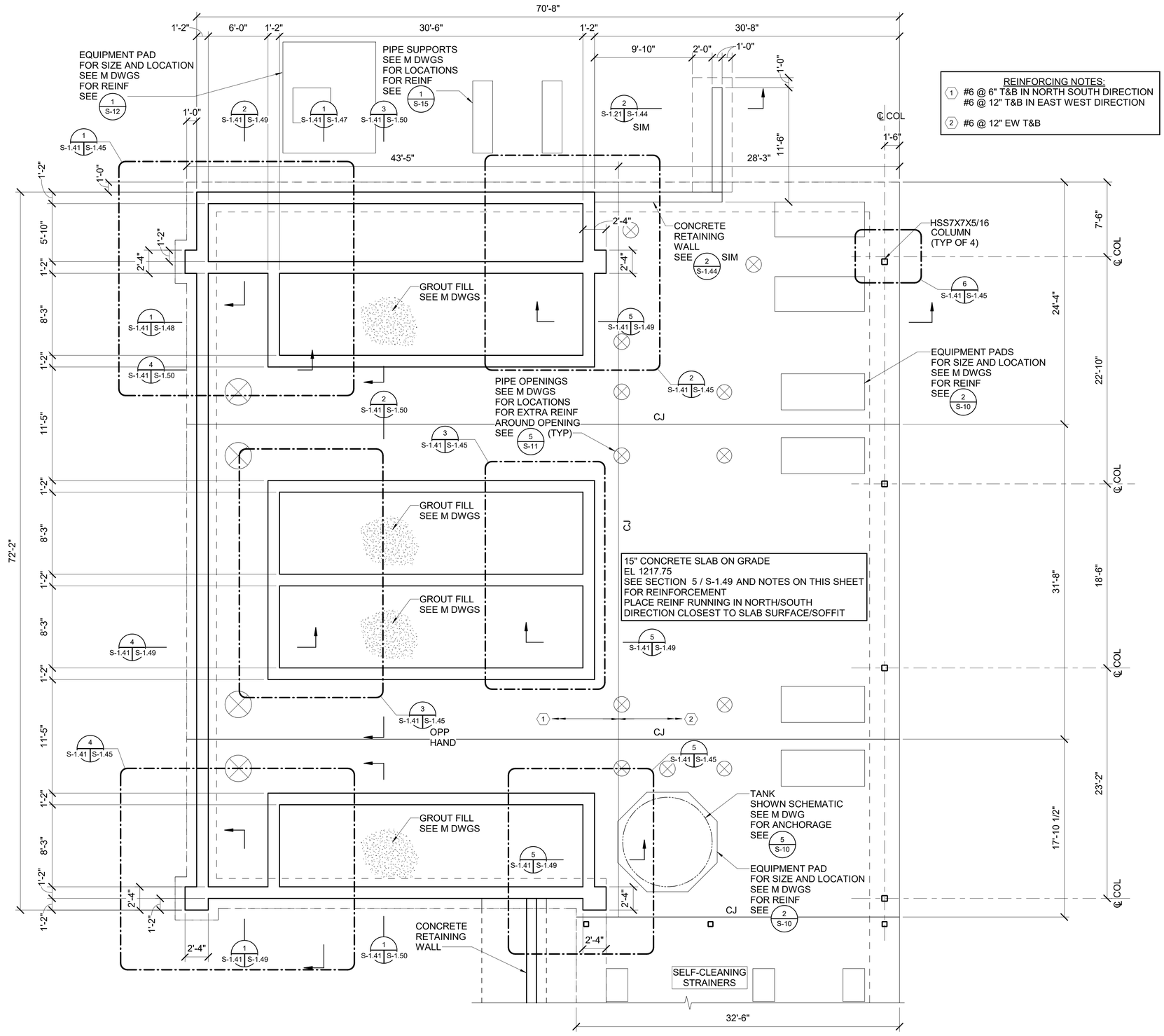

MEMBRANE FACILITY LOWER PLAN

3/16" = 1'-0"

GANNETT FLEMING

WILSON ENGINEERS

1620 West Fountainhead Pkwy
Suite 501
Tempe, Arizona 85282
Phone: (480) 893-8860

Improving Arizona's Infrastructure Since 1942

CITY OF CHANDLER
WATER RECLAMATION FACILITY
STRUCTURAL
MEMBRANE FACILITY
LOWER PLAN

CITY PROJECT NO. WW1901.203
WILSON PROJECT NO. 21007

Design: SJN	Drawn: MWK	Checked: TFW
Date: 02/2022	Wilson Project No. 21007	

Rev#	Date	Description	By

VERIFY SCALES

BAR IS ONE INCH ON ORIGINAL DRAWING

0 1"

IF NOT ONE INCH ON THIS SHEET, ADJUST SCALES ACCORDINGLY

Registered Professional Engineer
CERTIFICATE NO.
35234
TIM F. WONG
Date Signed 2/24/2022
ARIZONA, U. S. A.

Sheet No. S-1.41

AGENCY REVIEW

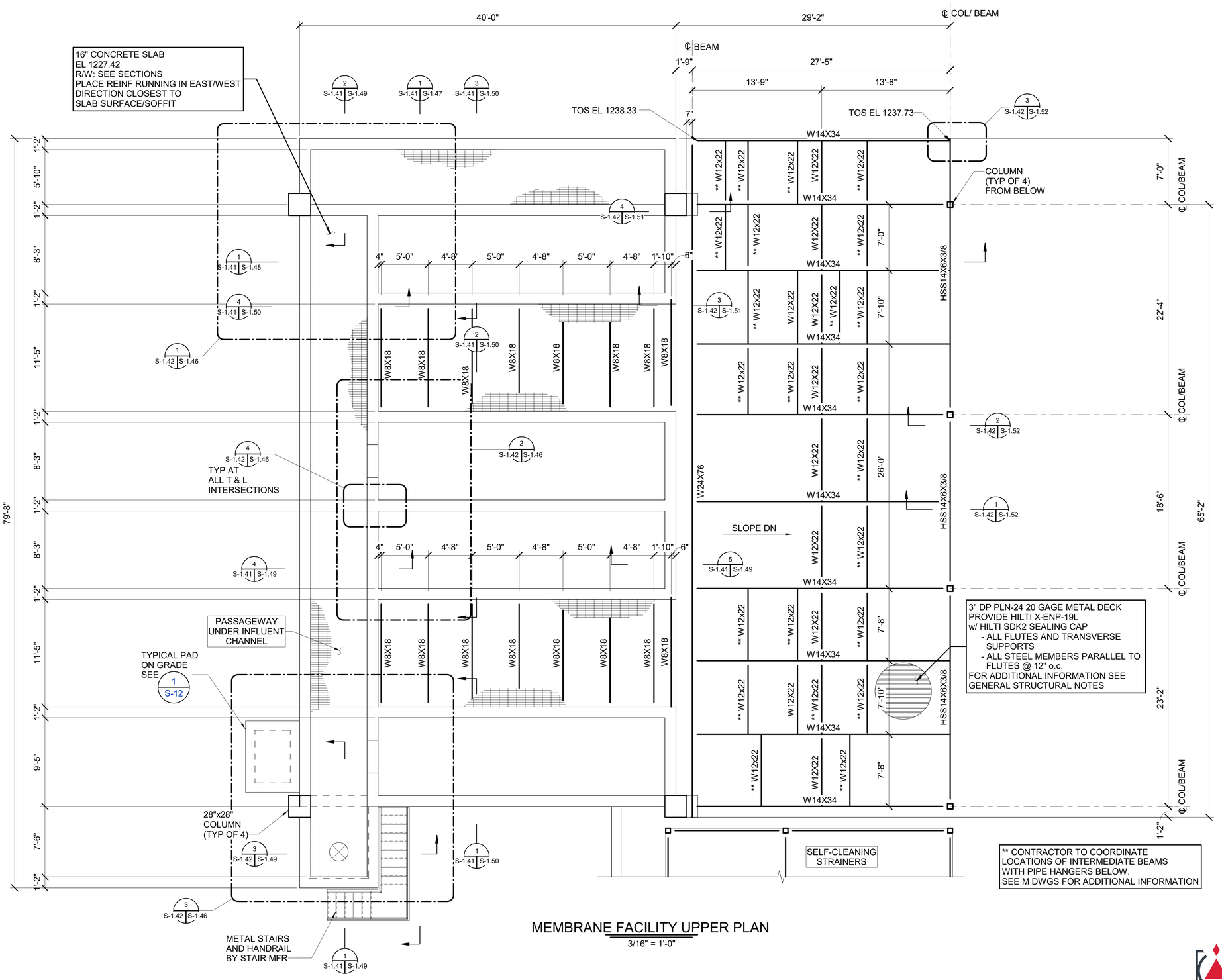

MEMBRANE FACILITY UPPER PLAN

3/16" = 1'-0"

1620 West Fountainhead Pkwy
Suite 501
Tempe, Arizona 85282
Phone: (480) 893-8860

Improving Arizona's
Infrastructure Since 1942

WILSON ENGINEERS

CITY OF CHANDLER
WATER RECLAMATION FACILITY
STRUCTURAL
MEMBRANE FACILITY
UPPER PLANS

CITY PROJECT NO.WW1901.203
WILSON PROJECT NO. 21007

Design: SJN	Drawn: MWK	Checked: TFW
Date: 02/2022	Wilson Project No. 21007	

Rev#	Date	Description	By

VERIFY SCALES

BAR IS ONE INCH ON ORIGINAL DRAWING

0 1"

IF NOT ONE INCH ON THIS SHEET, ADJUST SCALES ACCORDINGLY

Registered Professional Engineer
CERTIFICATE NO. 35234
TIM F. WONG
Date Signed 2/24/2022
ARIZONA, U. S. A.

GANNETT FLEMING

Sheet No. S-1.42

AGENCY REVIEW

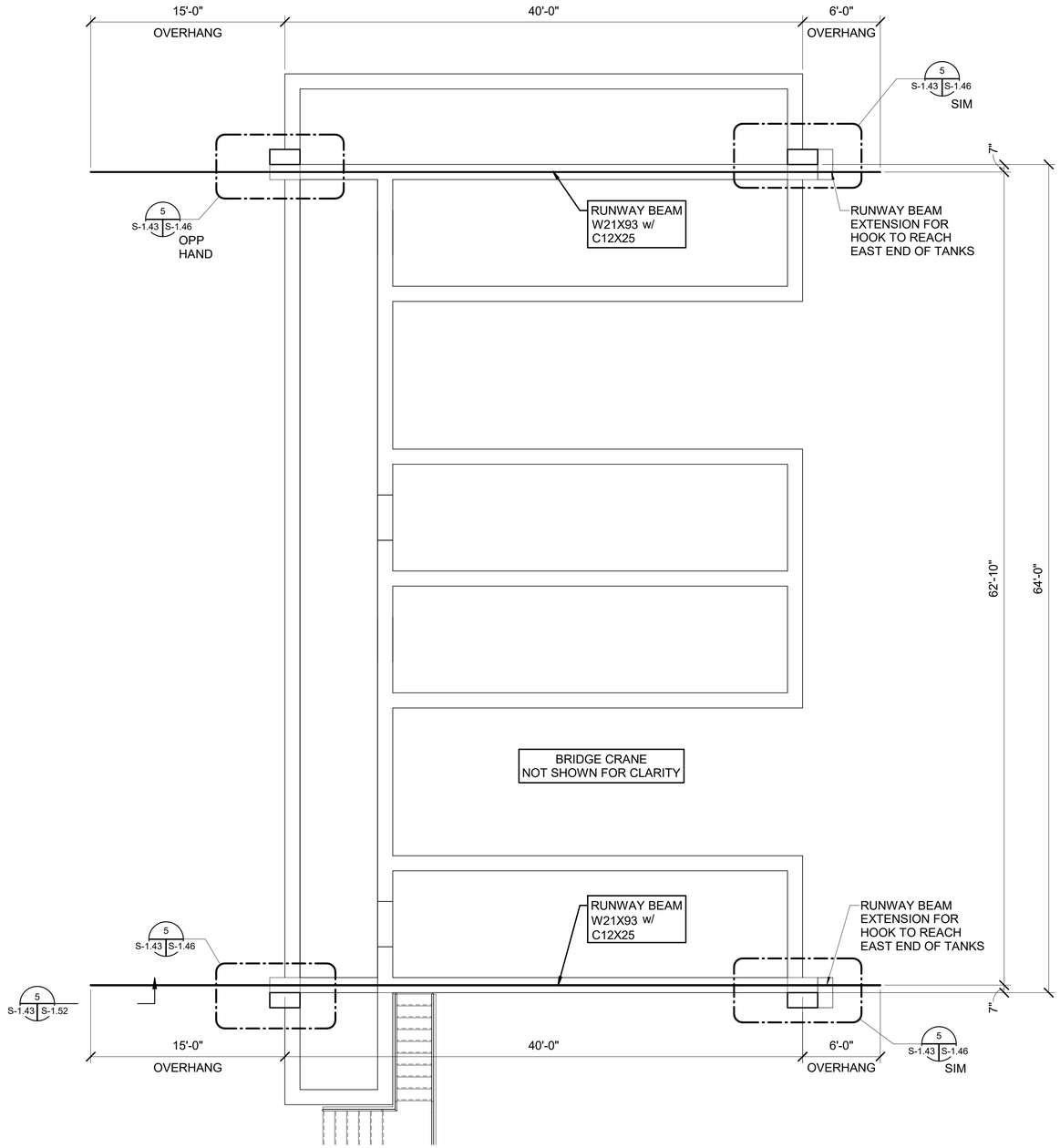

CRANE FRAMING PLAN

3/16" = 1'-0"

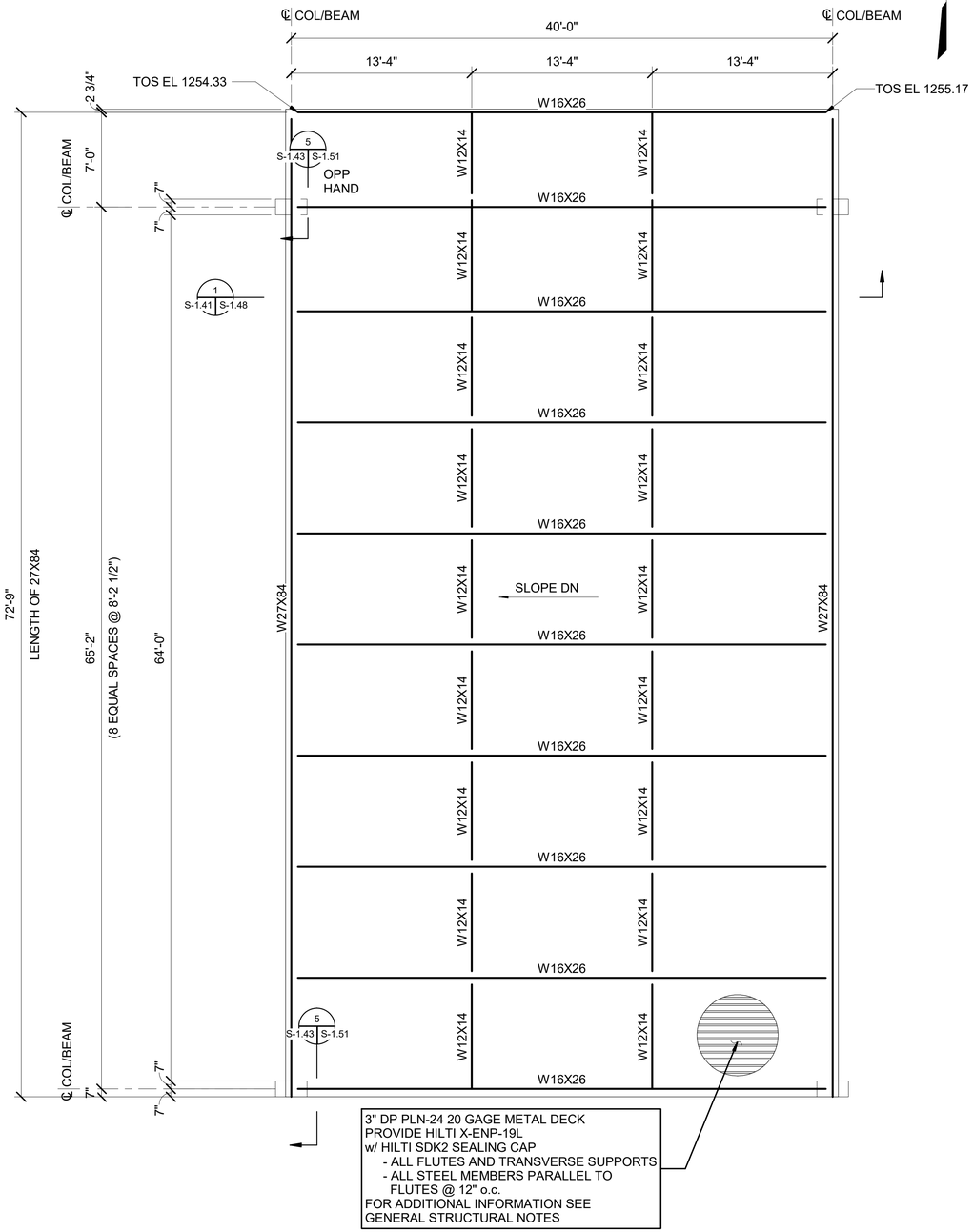

MEMBRANE FACILITY CANOPY PLAN

3/16" = 1'-0"

GANNETT FLEMING

1620 West Fountainhead Pkwy
Suite 501
Tempe, Arizona 85282
Phone: (480) 893-8860

Improving Arizona's
Infrastructure Since 1942

WILSON ENGINEERS

CITY OF CHANDLER
WATER RECLAMATION FACILITY
STRUCTURAL
MEMBRANE FACILITY
CANOPY PLAN

CITY PROJECT NO.WW1901.203
WILSON PROJECT NO. 21007

Design: SJN	Drawn: MWK	Checked: TFW
Date: 02/2022	Wilson Project No. 21007	

Rev#	Date	Description	By

VERIFY SCALES
BAR IS ONE INCH ON ORIGINAL DRAWING
0 1"
IF NOT ONE INCH ON THIS SHEET, ADJUST SCALES ACCORDINGLY

Registered Professional Engineer
CERTIFICATE NO. (Structural)
35234
TIM F. WONG
Date Signed 2/24/2022
ARIZONA, U. S. A.

Sheet No. S-1.43

AGENCY REVIEW

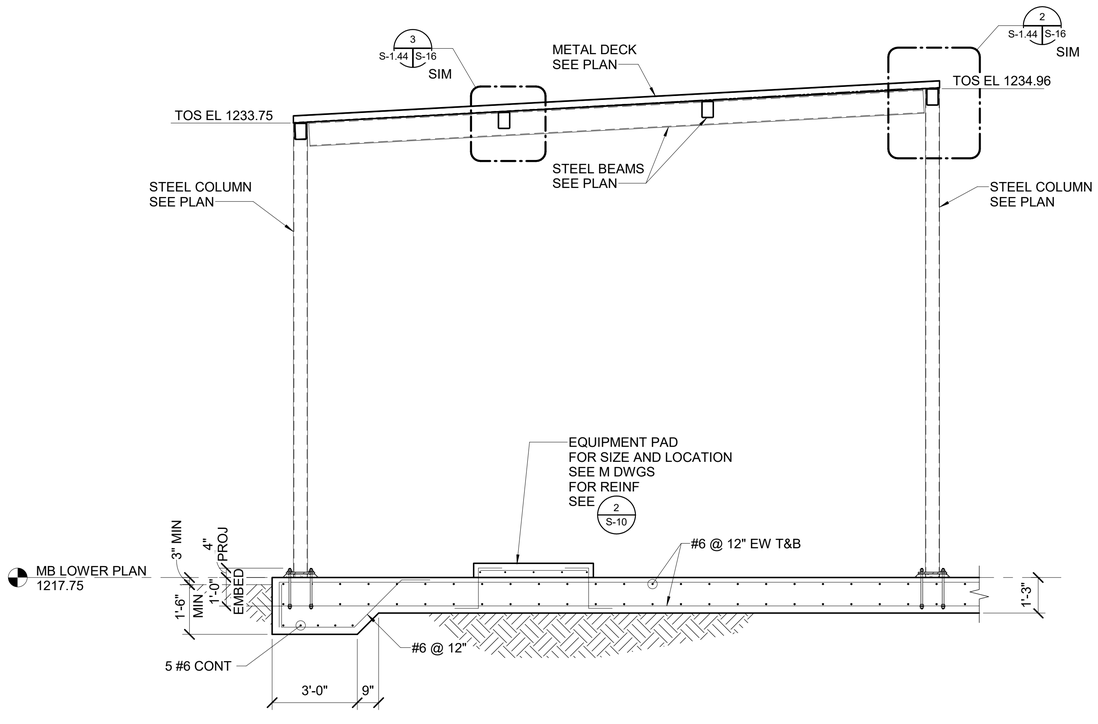

SECTION 1 S-1.21

3/8" = 1'-0"

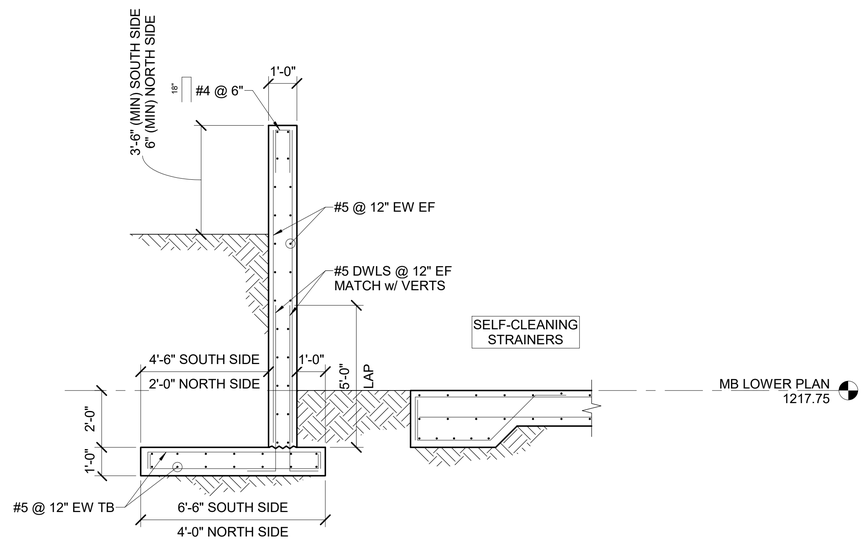

SECTION 2 S-1.21

3/8" = 1'-0"

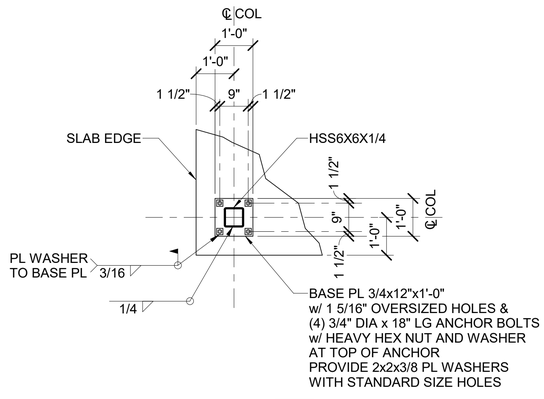

DETAIL 3 S-1.44

1/2" = 1'-0"

1620 West Fountainhead Pkwy
Suite 501
Tempe, Arizona 85282
Phone: (480) 893-8860

Improving Arizona's
Infrastructure Since 1942

WILSON ENGINEERS

CITY OF CHANDLER
WATER RECLAMATION FACILITY
STRUCTURAL
SELF-CLEANING STRAINERS
SECTIONS AND DETAILS 1

CITY PROJECT NO.WW1901.203
WILSON PROJECT NO. 21007

Design: SJN	Drawn: MWK	Checked: TFW
Date: 02/2022	Wilson Project No. 21007	

Rev#	Date	Description	By

VERIFY SCALES
BAR IS ONE INCH ON ORIGINAL DRAWING
0 1"
IF NOT ONE INCH ON THIS SHEET, ADJUST SCALES ACCORDINGLY

Registered Professional Engineer
CERTIFICATE NO.
35234
TIM F. WONG
Date Signed 2/24/2022
ARIZONA, U.S.A.

GANNETT FLEMING

Sheet No. S-1.44

AGENCY REVIEW

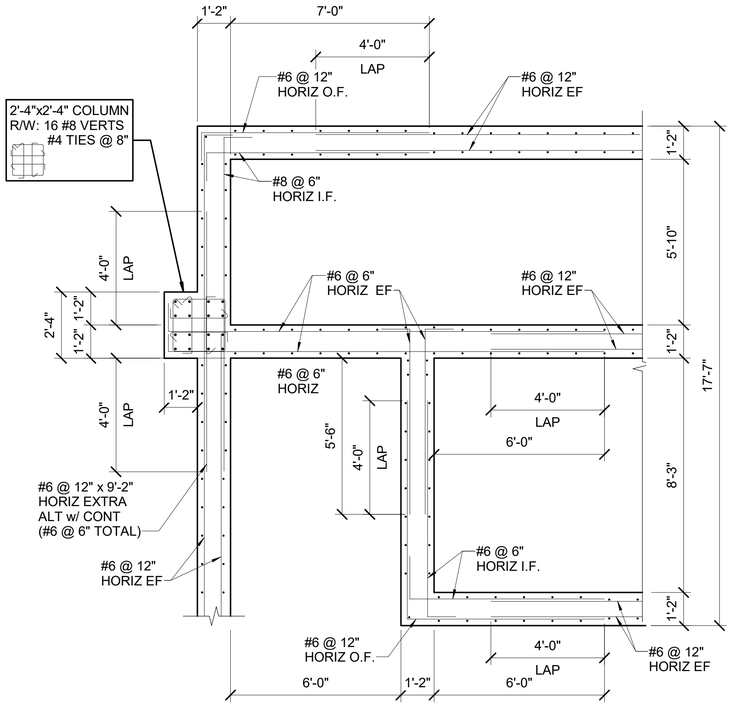

FOR VERTICAL REINF
SEE SECTIONS

PLAN VIEW

DETAIL 1 S-1.41

3/8" = 1'-0"

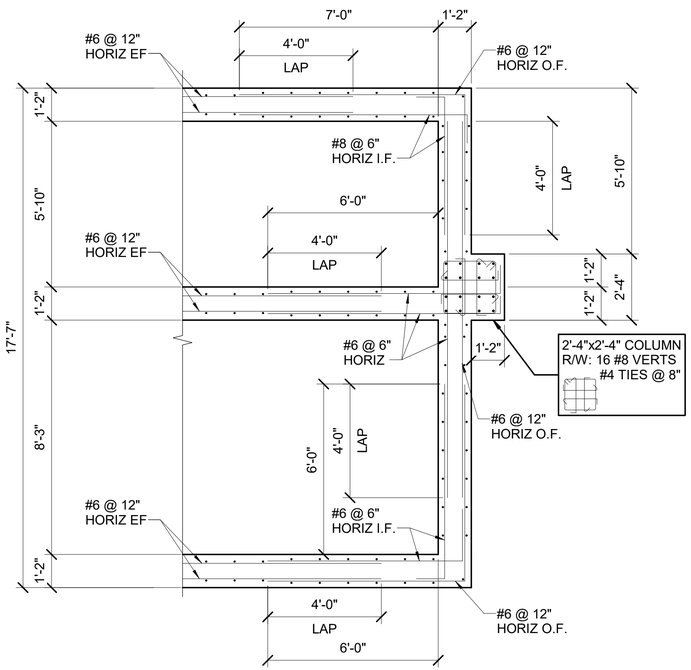

FOR VERTICAL REINF
SEE SECTIONS

PLAN VIEW

DETAIL 2 S-1.41

3/8" = 1'-0"

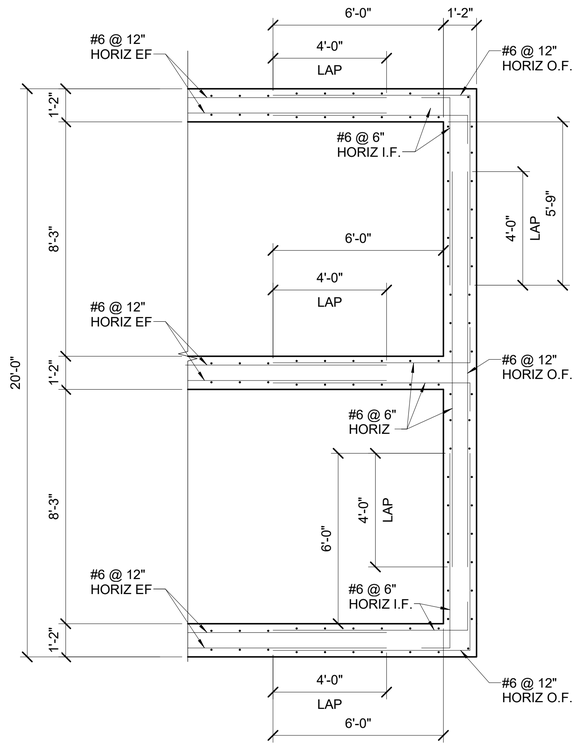

FOR VERTICAL REINF
SEE SECTIONS

PLAN VIEW

DETAIL 3 S-1.41

3/8" = 1'-0"

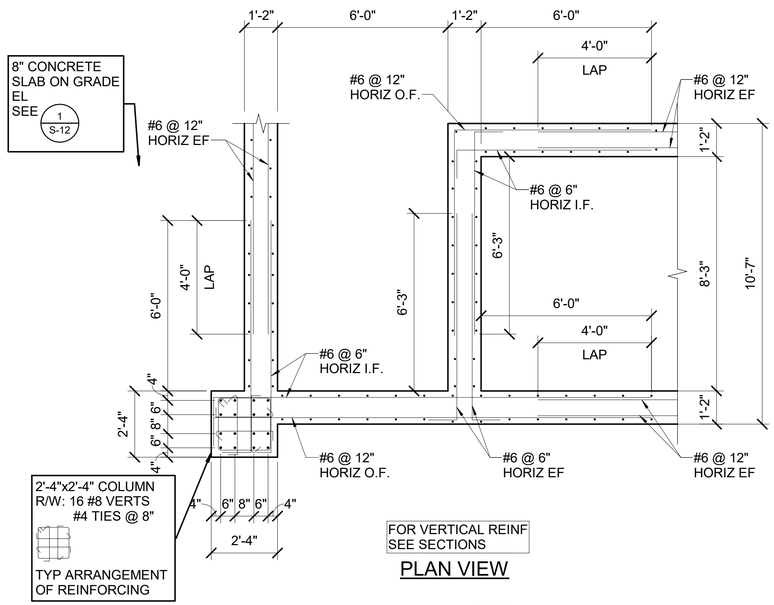

FOR VERTICAL REINF
SEE SECTIONS

PLAN VIEW

DETAIL 4 S-1.41

3/8" = 1'-0"

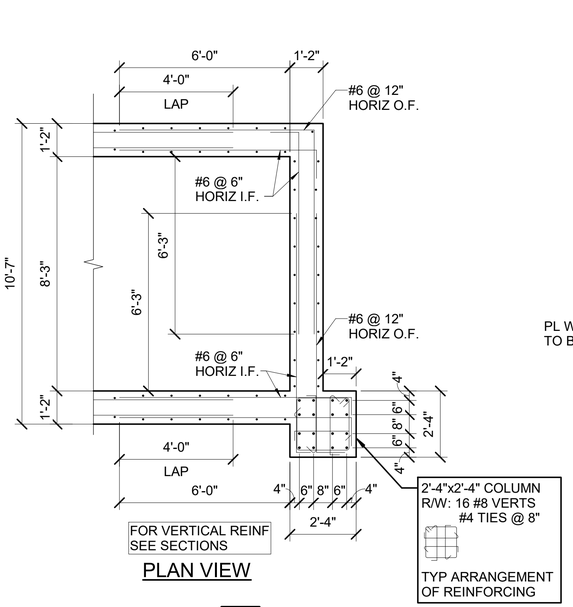

FOR VERTICAL REINF
SEE SECTIONS

PLAN VIEW

DETAIL 5 S-1.41

3/8" = 1'-0"

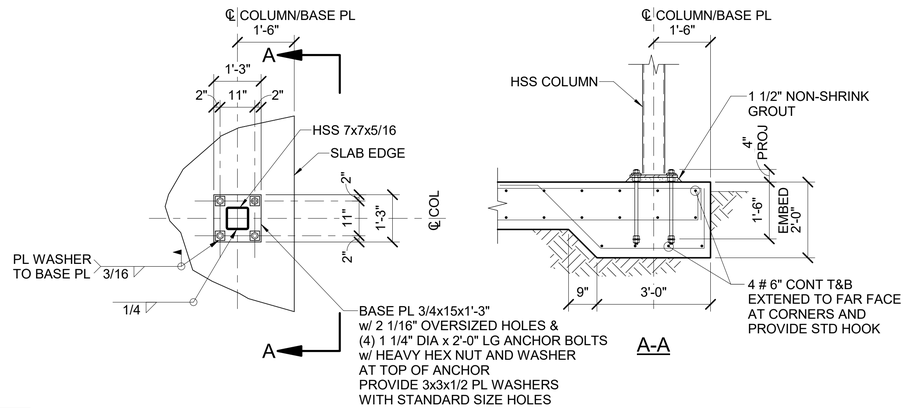

A-A

DETAIL 6 S-1.45

1/2" = 1'-0"

1620 West Fountainhead Pkwy
Suite 501
Tempe, Arizona 85282
Phone: (480) 893-8860

Improving Arizona's
Infrastructure Since 1942

WILSON ENGINEERS

CITY OF CHANDLER
WATER RECLAMATION FACILITY
STRUCTURAL
MEMBRANE FACILITY
LOWER ENLARGED PLANS

CITY PROJECT NO. WW1901.203
WILSON PROJECT NO. 21007

Design: SJN	Drawn: MWK	Checked: TFW
Date: 02/2022	Wilson Project No. 21007	

Rev#	Date	Description	By

VERIFY SCALES
BAR IS ONE INCH ON ORIGINAL DRAWING
0 1"
IF NOT ONE INCH ON THIS SHEET, ADJUST SCALES ACCORDINGLY

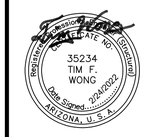

GANNETT FLEMING

Sheet No. S-1.45

2/24/2022 4:02:39 PM BIM 360://068680-Wilson_Chandler-RWIF/068680_Doc_Model_S_Central_R20.rvt

AGENCY REVIEW

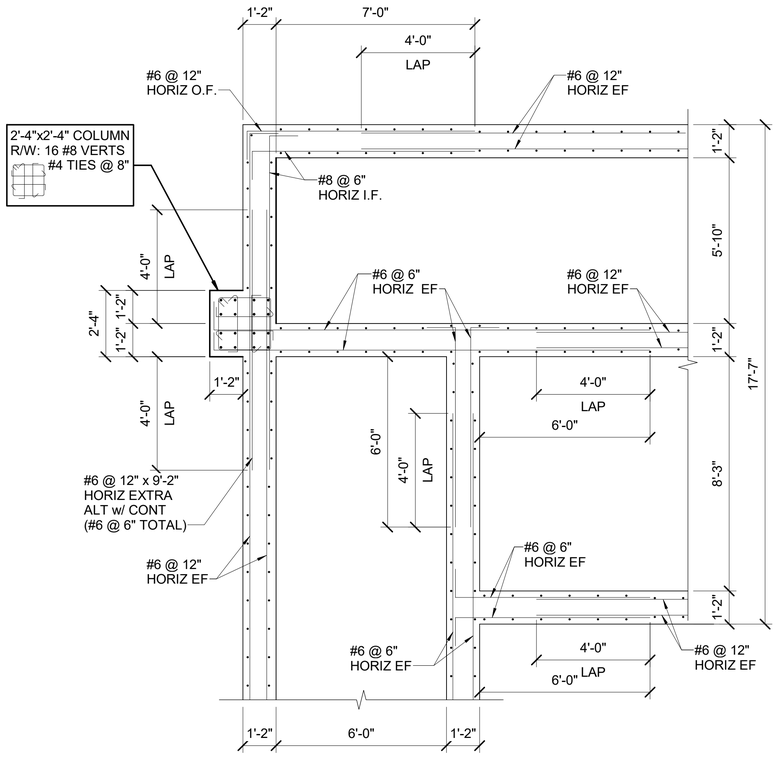

PLAN VIEW

DETAIL 1 S-1.46

3/8" = 1'-0"

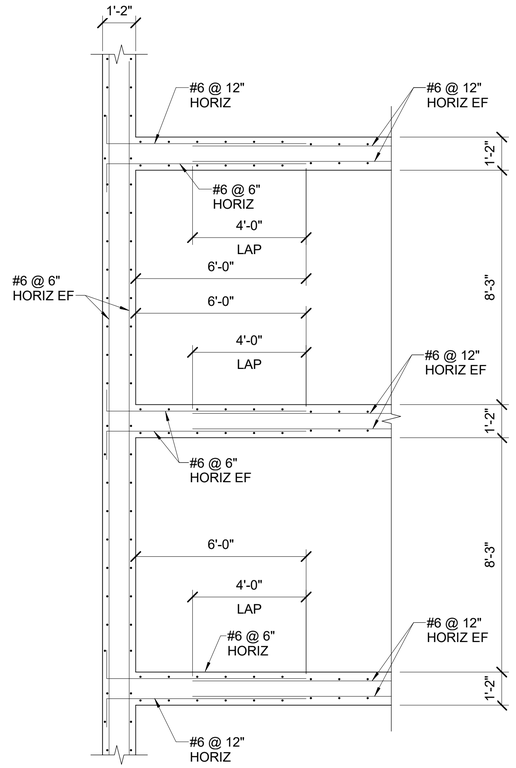

PLAN VIEW

DETAIL 2 S-1.42

3/8" = 1'-0"

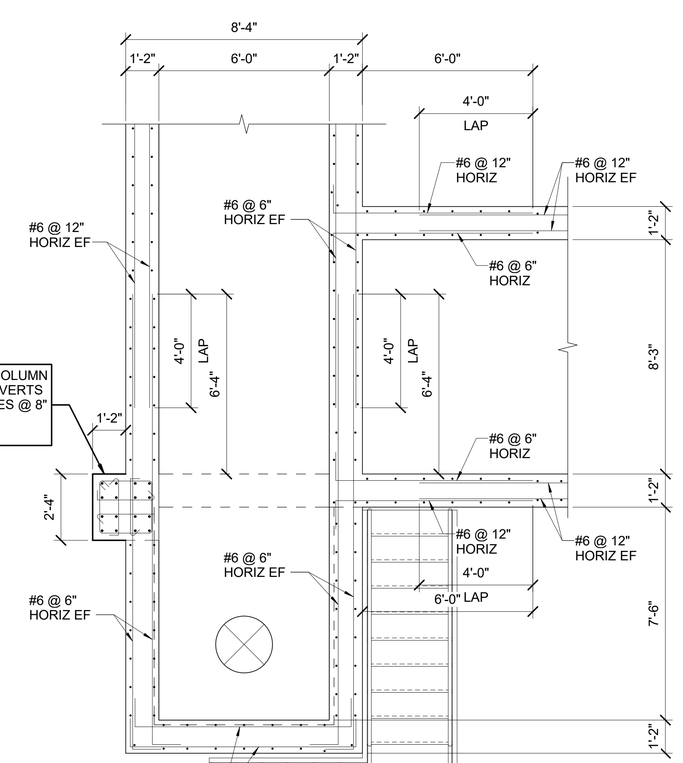

PLAN VIEW

DETAIL 3 S-1.42

3/8" = 1'-0"

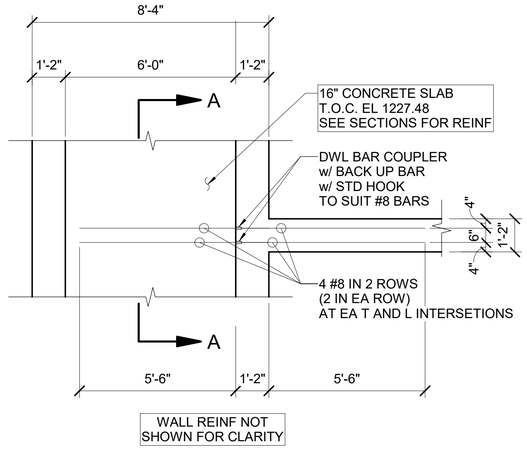

WALL REINF NOT
SHOWN FOR CLARITY

DETAIL 4 S-1.46

3/8" = 1'-0"

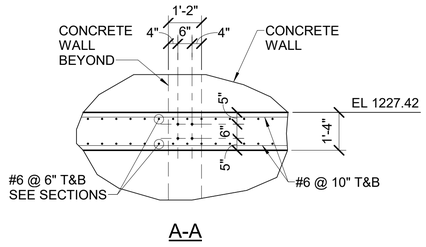

A-A

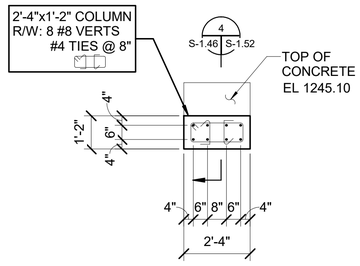

COLUMN ABOVE EL 1245.10

DETAIL 5 S-1.46

3/8" = 1'-0"

WILSON ENGINEERS
1620 West Fountainhead Pkwy
Suite 501
Tempe, Arizona 85282
Phone: (480) 893-8860
Improving Arizona's
Infrastructure Since 1942

CITY OF CHANDLER
WATER RECLAMATION FACILITY
STRUCTURAL
MEMBRANE FACILITY
UPPER ENLARGED PLANS

CITY PROJECT NO. WW1901.203
WILSON PROJECT NO. 21007

Rev#	Date	Description	By

Design: SJN
Date: 02/2022
Drawn: MWK
Wilson Project No. 21007
Checked: TFW

VERIFY SCALES
BAR IS ONE INCH ON ORIGINAL DRAWING
0 1"
IF NOT ONE INCH ON THIS SHEET, ADJUST SCALES ACCORDINGLY

Registered Professional Engineer
CERTIFICATE NO.
35234
TIM F. WONG
Date Signed 2/24/2022
ARIZONA, U.S.A.

GANNETT FLEMING

Sheet No. S-1.46

AGENCY REVIEW

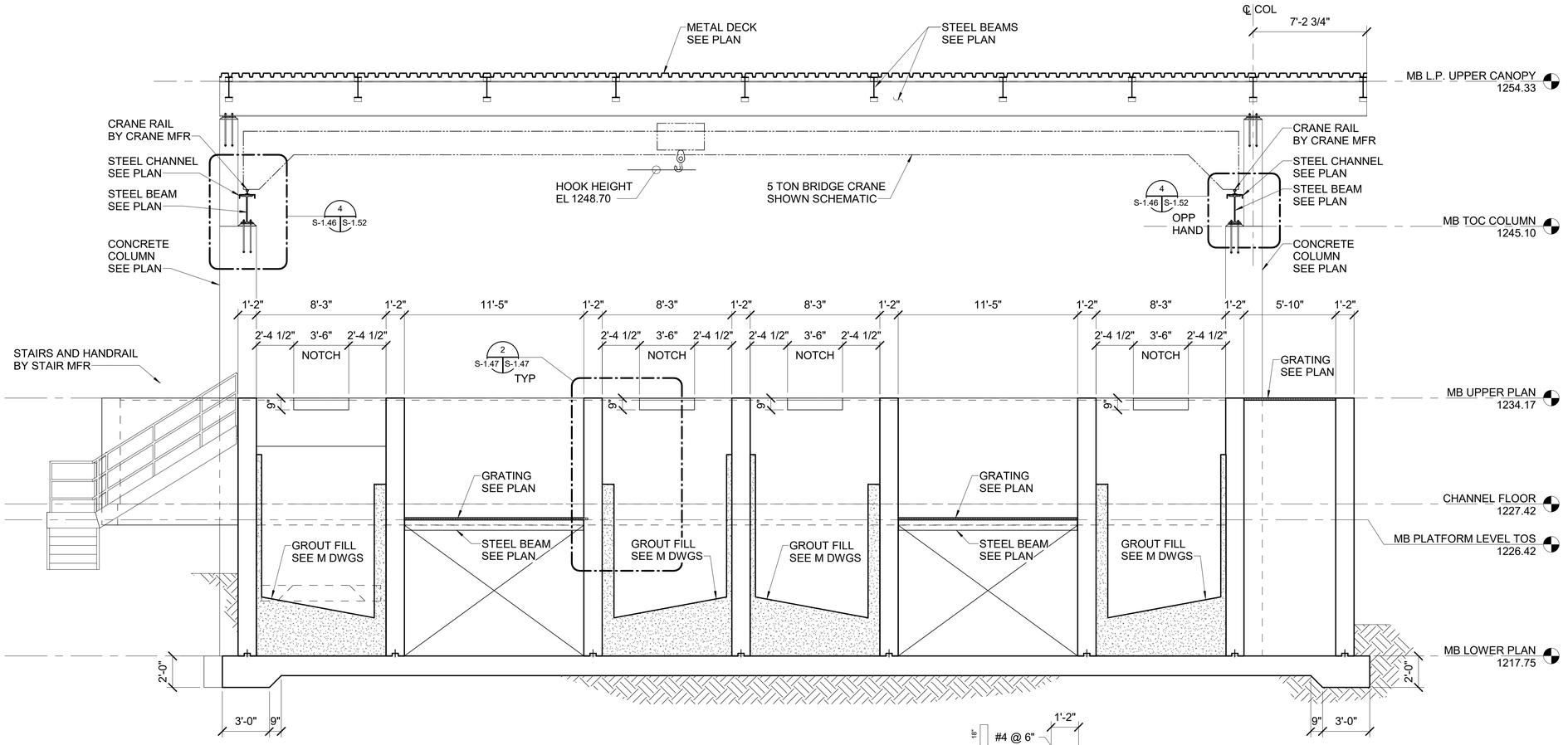

SECTION 1 / S-1.41

1/4" = 1'-0"

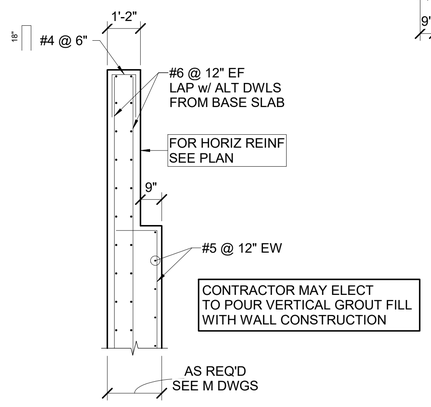

CONTRACTORS OPTION
IN LIEU OF GROUT FILL

SECTION 2 / S-1.47

3/8" = 1'-0"

1620 West Fountainhead Pkwy
Suite 501
Tempe, Arizona 85282
Phone: (480) 893-8860

Improving Arizona's
Infrastructure Since 1942

WILSON ENGINEERS

CITY OF CHANDLER
WATER RECLAMATION FACILITY
STRUCTURAL
MEMBRANE FACILITY
SECTIONS AND DETAILS 1

CITY PROJECT NO. WW1901.203
WILSON PROJECT NO. 21007

Rev#	Date	Description	By

Design: SJN
Date: 02/2022
Drawn: MWK
Checked: TFW
Wilson Project No. 21007

VERIFY SCALES
BAR IS ONE INCH ON ORIGINAL DRAWING
0 1"
IF NOT ONE INCH ON THIS SHEET, ADJUST SCALES ACCORDINGLY



GANNETT FLEMING

Sheet No. S-1.47

AGENCY REVIEW

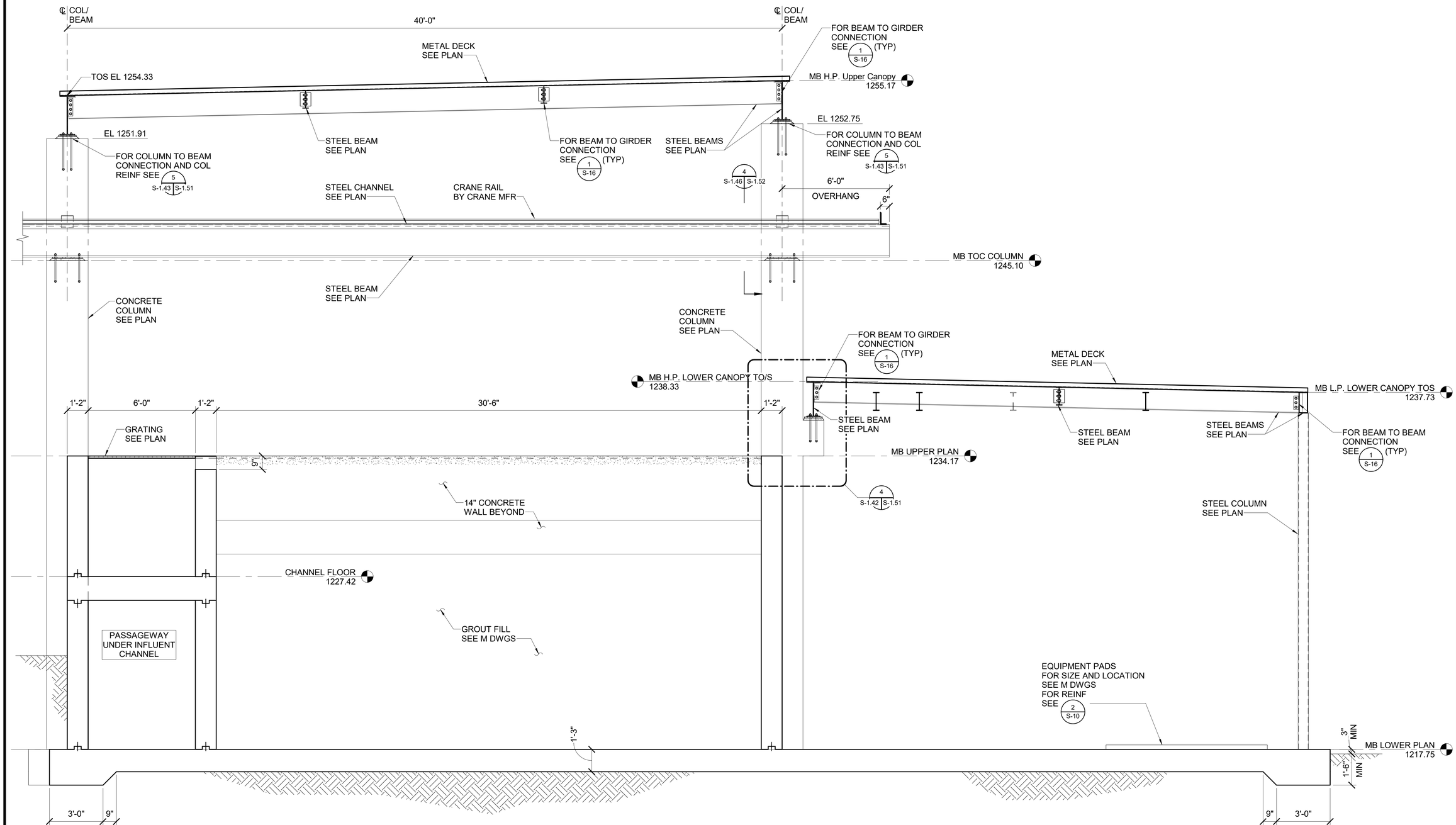

SECTION 1 S-1.41

3/8" = 1'-0"

1620 West Fountainhead Pkwy
Suite 501
Tempe, Arizona 85282
Phone: (480) 893-8860

Improving Arizona's Infrastructure Since 1942

WILSON ENGINEERS

CITY OF CHANDLER
WATER RECLAMATION FACILITY
STRUCTURAL
MEMBRANE FACILITY
SECTIONS AND DETAILS 2

CITY PROJECT NO. WW1901.203
WILSON PROJECT NO. 21007

Design: SJN	Drawn: MWK	Checked: TFW
Date: 02/2022	Wilson Project No. 21007	

Rev#	Date	Description	By

VERIFY SCALES
BAR IS ONE INCH ON ORIGINAL DRAWING
0 1"
IF NOT ONE INCH ON THIS SHEET, ADJUST SCALES ACCORDINGLY

Registered Professional Engineer
CERTIFICATE NO.
35234
TIM F. WONG
Date Signed 2/24/2022
ARIZONA, U.S.A.

GANNETT FLEMING

Sheet No. S-1.48

AGENCY REVIEW

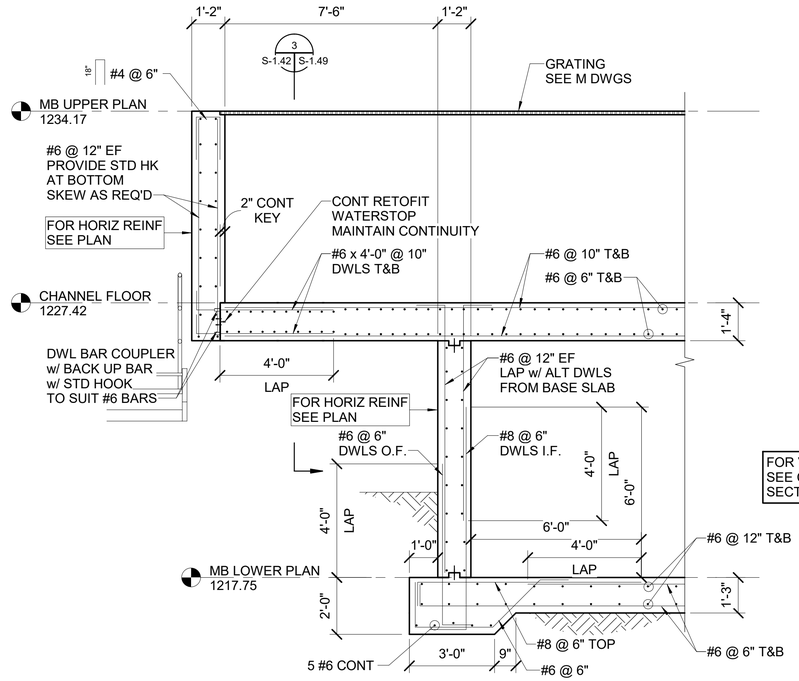

SECTION 1 S-1.41

3/8" = 1'-0"

FOR VERTICAL GROUT FILL
SEE CONTRACTORS OPTION
SECTION 2 / S-1.47

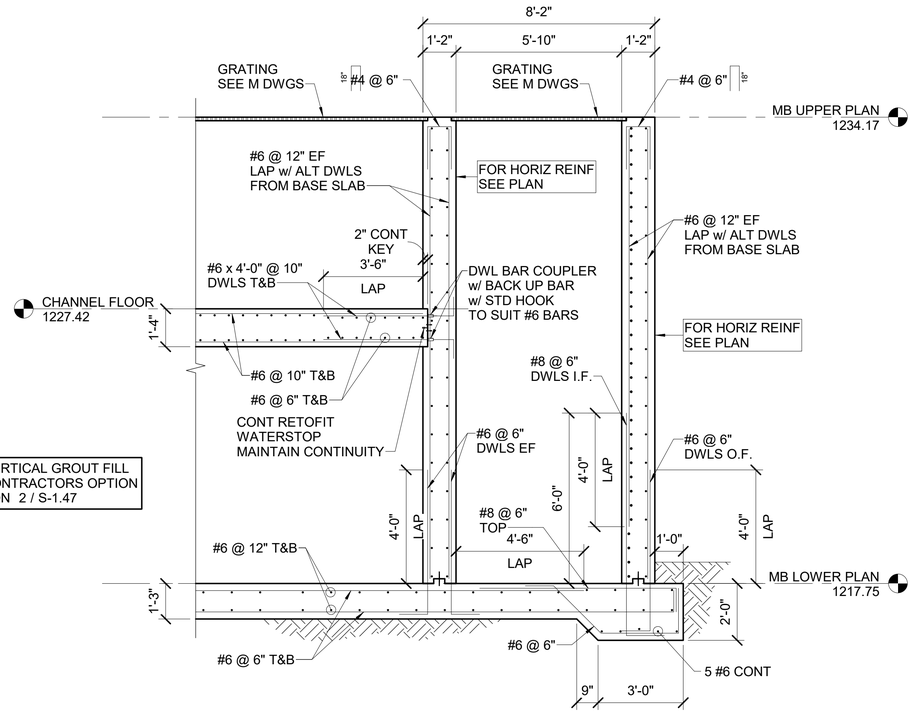

SECTION 2 S-1.41

3/8" = 1'-0"

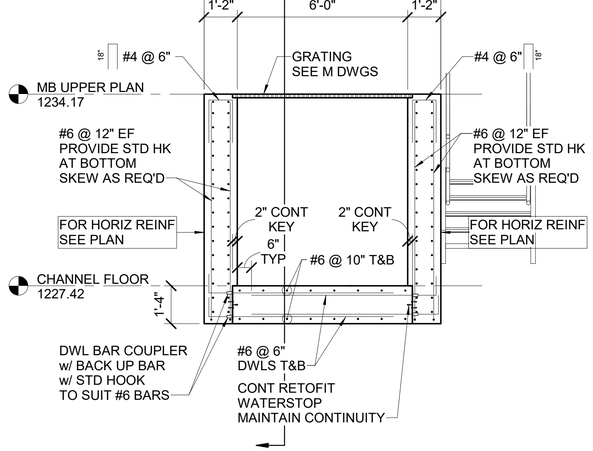

SECTION 3 S-1.42

3/8" = 1'-0"

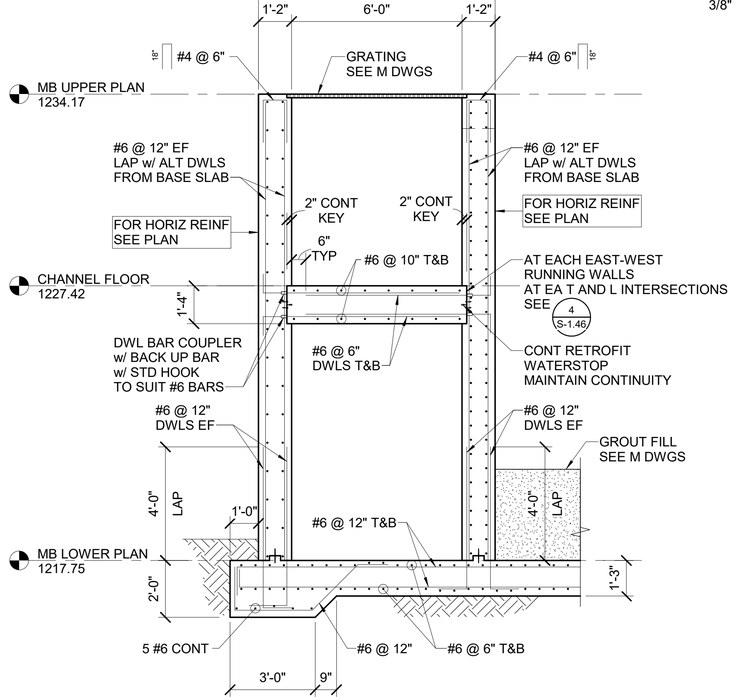

SECTION 4 S-1.41

3/8" = 1'-0"

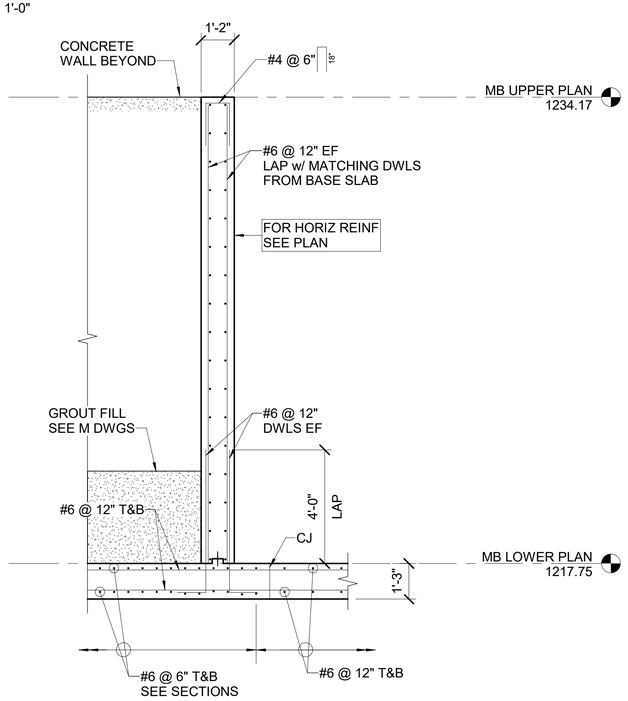

SECTION 5 S-1.41

3/8" = 1'-0"

1620 West Fountainhead Pkwy
Suite 501
Tempe, Arizona 85282
Phone: (480) 893-8860

Improving Arizona's
Infrastructure Since 1942

WILSON ENGINEERS

CITY OF CHANDLER
WATER RECLAMATION FACILITY
STRUCTURAL
MEMBRANE FACILITY
SECTIONS AND DETAILS 3

CITY PROJECT NO. WW1901.203
WILSON PROJECT NO. 21007

Design: SJN	Drawn: MWK	Checked: TFW
Date: 02/2022	Wilson Project No. 21007	

Rev#	Date	Description	By

VERIFY SCALES
BAR IS ONE INCH ON ORIGINAL DRAWING
0 1"
IF NOT ONE INCH ON THIS SHEET, ADJUST SCALES ACCORDINGLY

Registered Professional Engineer
CERTIFICATE NO.
35234
TIM F. WONG
Date Signed 2/24/2022
ARIZONA, U. S. A.

GANNETT FLEMING

Sheet No. S-1.49

AGENCY REVIEW

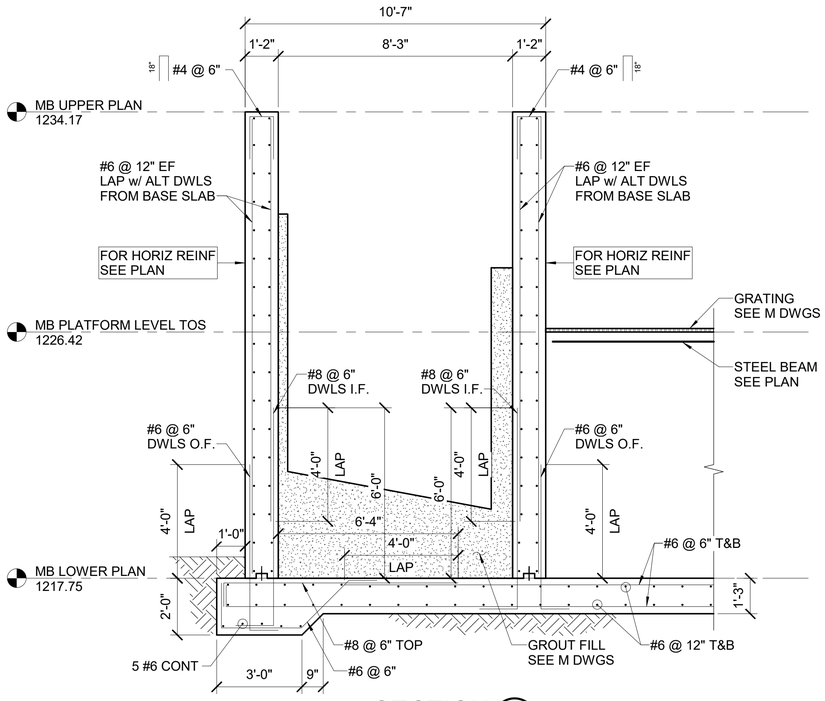

SECTION 1 S-1.41

3/8" = 1'-0"

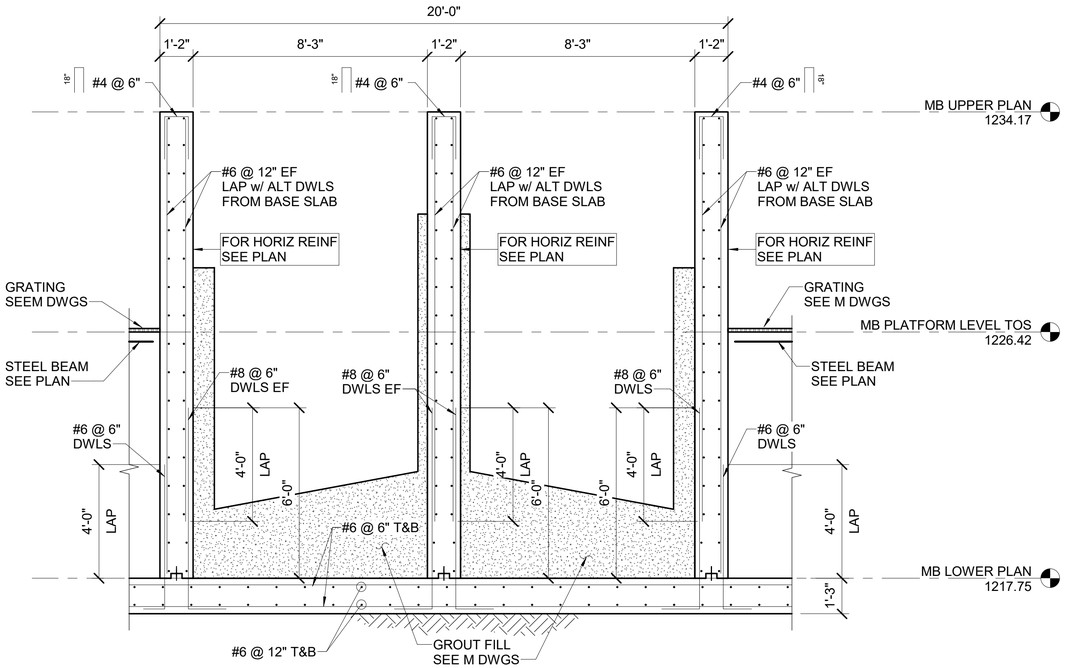

SECTION 2 S-1.41

3/8" = 1'-0"

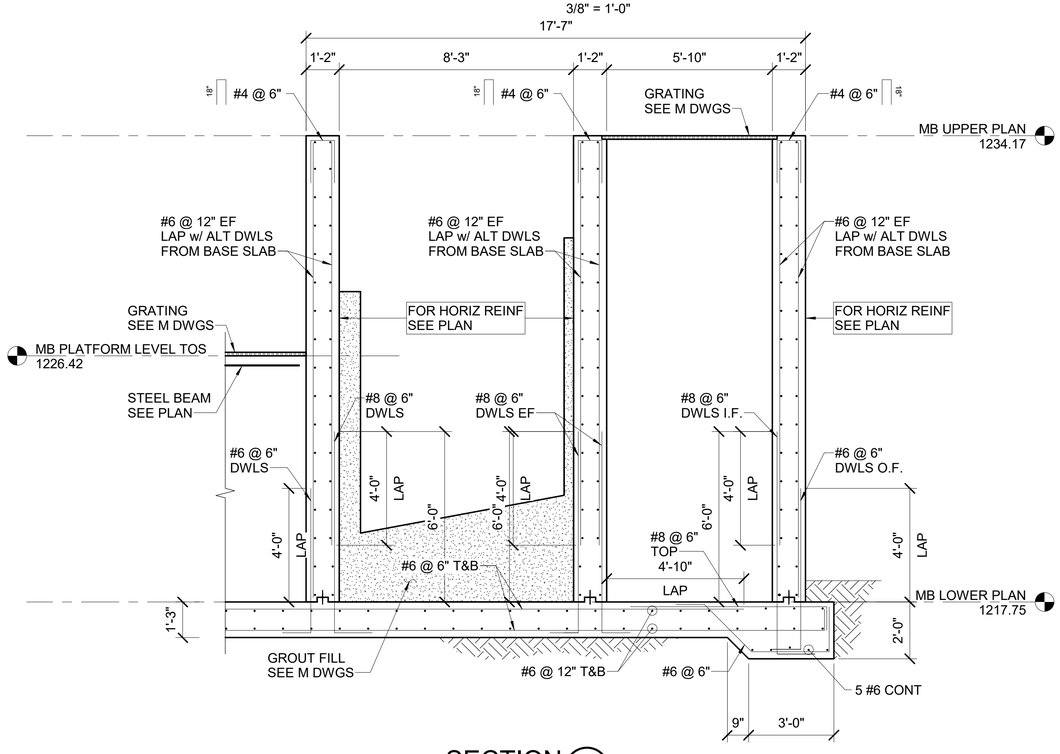

SECTION 3 S-1.41

3/8" = 1'-0"

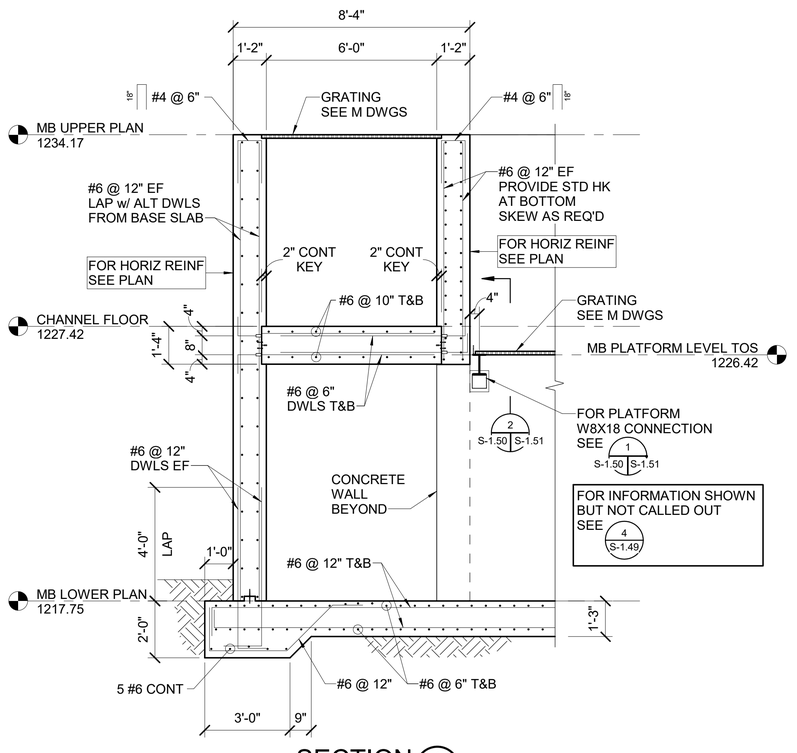

SECTION 4 S-1.41

3/8" = 1'-0"

1620 West Fountainhead Pkwy
Suite 501
Tempe, Arizona 85282
Phone: (480) 893-8860

Improving Arizona's
Infrastructure Since 1942

WILSON ENGINEERS

CITY OF CHANDLER
WATER RECLAMATION FACILITY
STRUCTURAL
MEMBRANE FACILITY
SECTIONS AND DETAILS 4

CITY PROJECT NO. WW1901.203
WILSON PROJECT NO. 21007

Design: SJN	Drawn: MWK	Checked: TFW
Date: 02/2022	Wilson Project No. 21007	

Rev#	Date	Description	By

VERIFY SCALES
BAR IS ONE INCH ON ORIGINAL DRAWING
0 1"
IF NOT ONE INCH ON THIS SHEET, ADJUST SCALES ACCORDINGLY

Registered Professional Engineer
CERTIFICATE NO.
35234
TIM F. WONG
Date Signed 2/24/2022
ARIZONA, U. S. A.

GANNETT FLEMING

Sheet No. S-1.50

AGENCY REVIEW

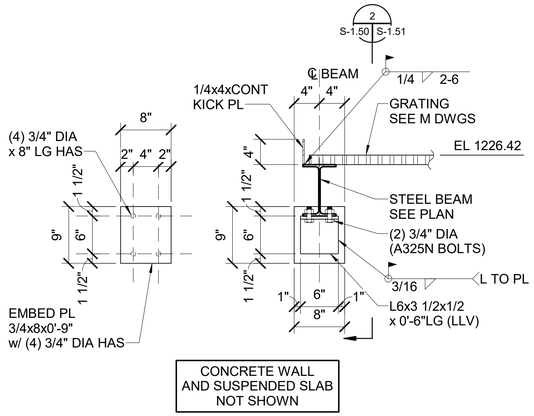

SECTION 1 / S-1.50

1" = 1'-0"

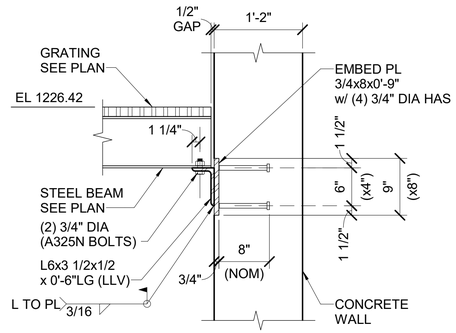

SECTION 2 / S-1.50

1" = 1'-0"

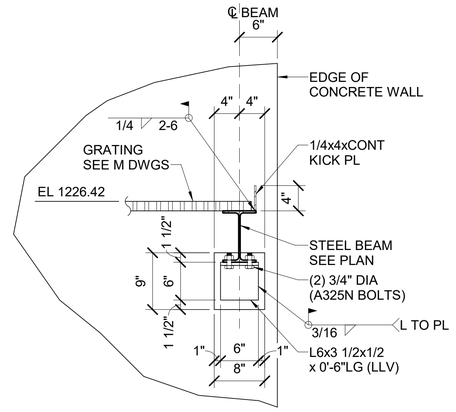

SECTION 3 / S-1.42

1" = 1'-0"

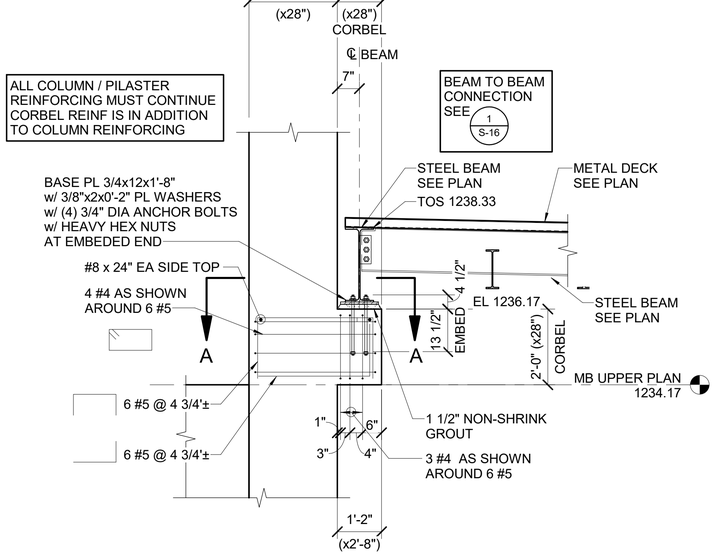

SECTION 4 / S-1.42

1/2" = 1'-0"

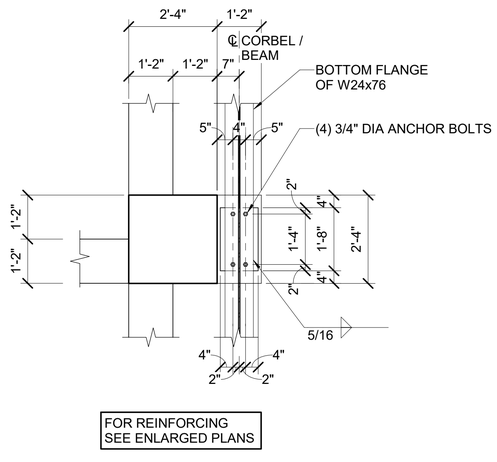

FOR REINFORCING
SEE ENLARGED PLANS

A-A

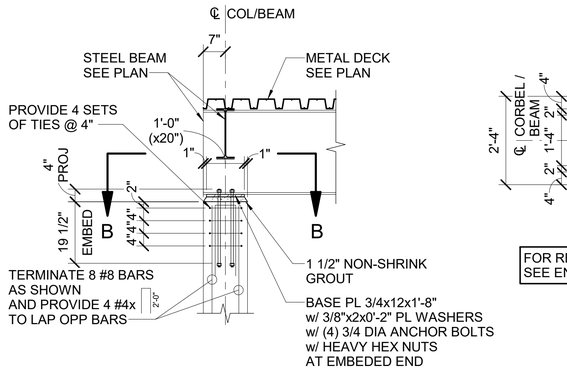

SECTION 5 / S-1.43

1/2" = 1'-0"

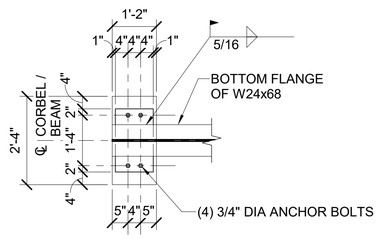

FOR REINFORCING
SEE ENLARGED PLANS

B-B

1620 West Fountainhead Pkwy
Suite 501
Tempe, Arizona 85282
Phone: (480) 893-8860

Improving Arizona's
Infrastructure Since 1942

WILSON ENGINEERS

CITY OF CHANDLER
WATER RECLAMATION FACILITY
STRUCTURAL
MEMBRANE FACILITY
SECTIONS AND DETAILS 5

CITY PROJECT NO. WW1901.203
WILSON PROJECT NO. 21007

Design: SJN	Drawn: MWK	Checked: TFW
Date: 02/2022	Wilson Project No. 21007	

Rev#	Date	Description	By

VERIFY SCALES
BAR IS ONE INCH ON ORIGINAL DRAWING
0 1"
IF NOT ONE INCH ON THIS SHEET, ADJUST SCALES ACCORDINGLY



GANNETT FLEMING

Sheet No. S-1.51

AGENCY REVIEW

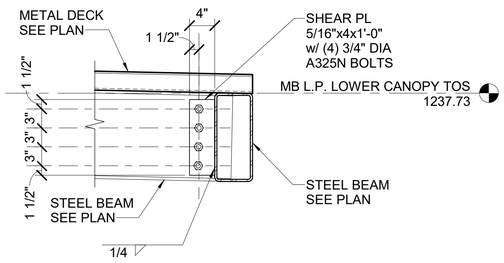

SECTION 1 S-1.42

1" = 1'-0"

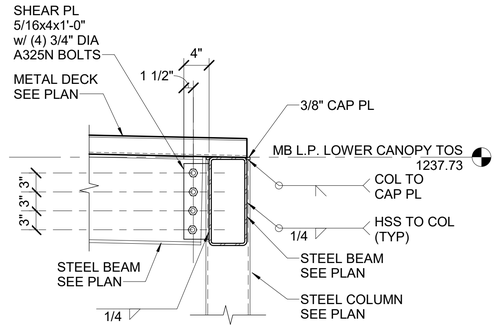

SECTION 2 S-1.42

1" = 1'-0"

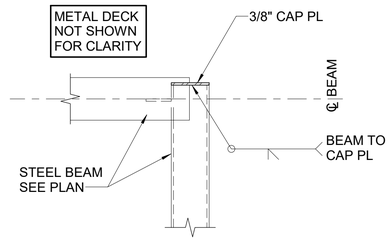

CANOPY CORNER PLAN

DETAIL 3 S-1.52

1" = 1'-0"

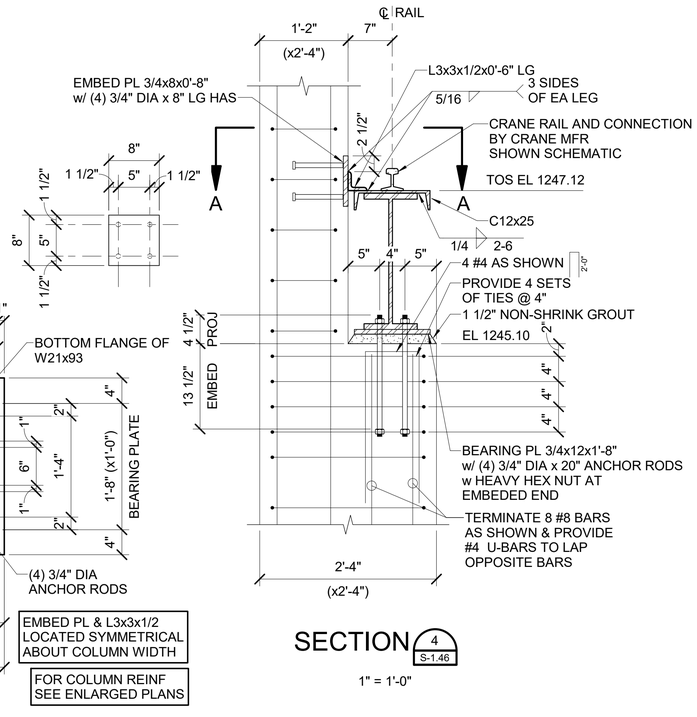

A-A

SECTION 4 S-1.46

1" = 1'-0"

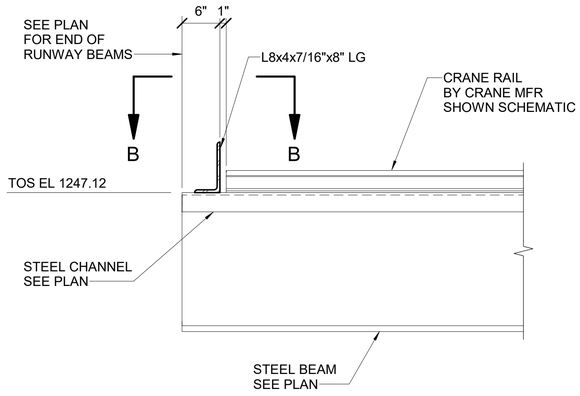

SECTION 5 S-1.43

1" = 1'-0"

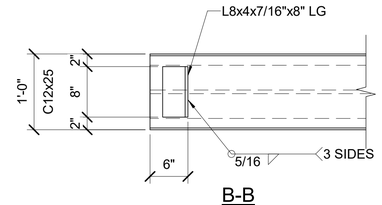

B-B

1620 West Fountainhead Pkwy
Suite 501
Tempe, Arizona 85282
Phone: (480) 893-8860

Improving Arizona's
Infrastructure Since 1942

WILSON ENGINEERS

CITY OF CHANDLER
WATER RECLAMATION FACILITY
STRUCTURAL
MEMBRANE FACILITY
SECTIONS AND DETAILS 6

CITY PROJECT NO. WW1901.203
WILSON PROJECT NO. 21007

Design: SJN	Drawn: MWK	Checked: TFW
Date: 02/2022	Wilson Project No. 21007	

Rev#	Date	Description	By

VERIFY SCALES
BAR IS ONE INCH ON ORIGINAL DRAWING
0 1"
IF NOT ONE INCH ON THIS SHEET, ADJUST SCALES ACCORDINGLY



GANNETT FLEMING

Sheet No. S-1.52

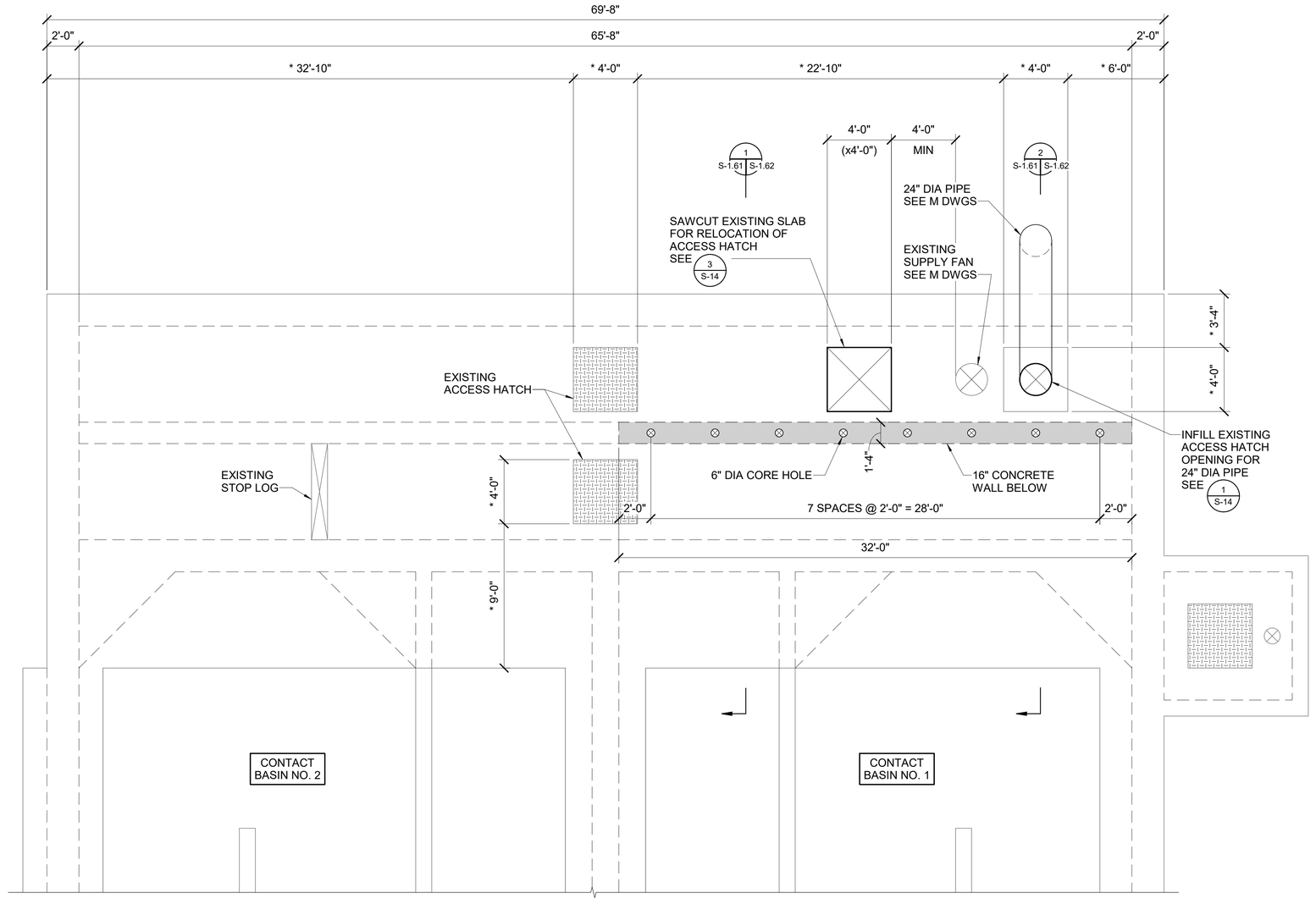

EXISTING CHLORINE CONTACT BASIN

1/4" = 1'-0"

1620 West Fountainhead Pkwy
Suite 501
Tempe, Arizona 85282
Phone: (480) 893-8860

Improving Arizona's Infrastructure Since 1942

WILSON ENGINEERS

CITY OF CHANDLER
WATER RECLAMATION FACILITY
STRUCTURAL
CHLORINE CONTACT BASIN
UPPER PLAN

CITY PROJECT NO.WW1901.203
WILSON PROJECT NO. 21007

Design: SJN	Drawn: MWK	Checked: TFW
Date: 02/2022	Wilson Project No. 21007	

Rev#	Date	Description	By

VERIFY SCALES

BAR IS ONE INCH ON ORIGINAL DRAWING

0 1"

IF NOT ONE INCH ON THIS SHEET, ADJUST SCALES ACCORDINGLY



GANNETT FLEMING

Sheet No. S-1.61

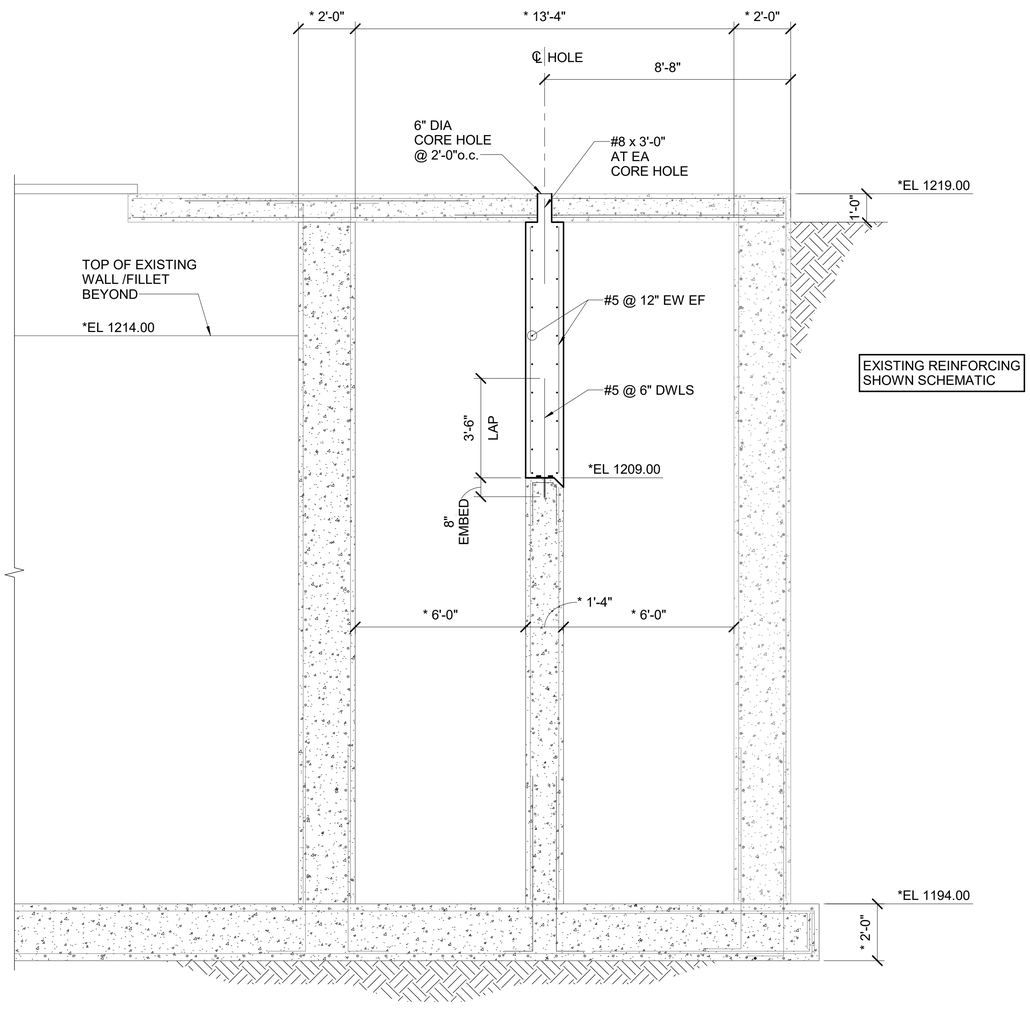

EXISTING REINFORCING
SHOWN SCHEMATIC

* CONTRACTOR TO VERIFY ELEVATIONS AND DIMENSIONS

SECTION 1 / S-1.61

3/8" = 1'-0"

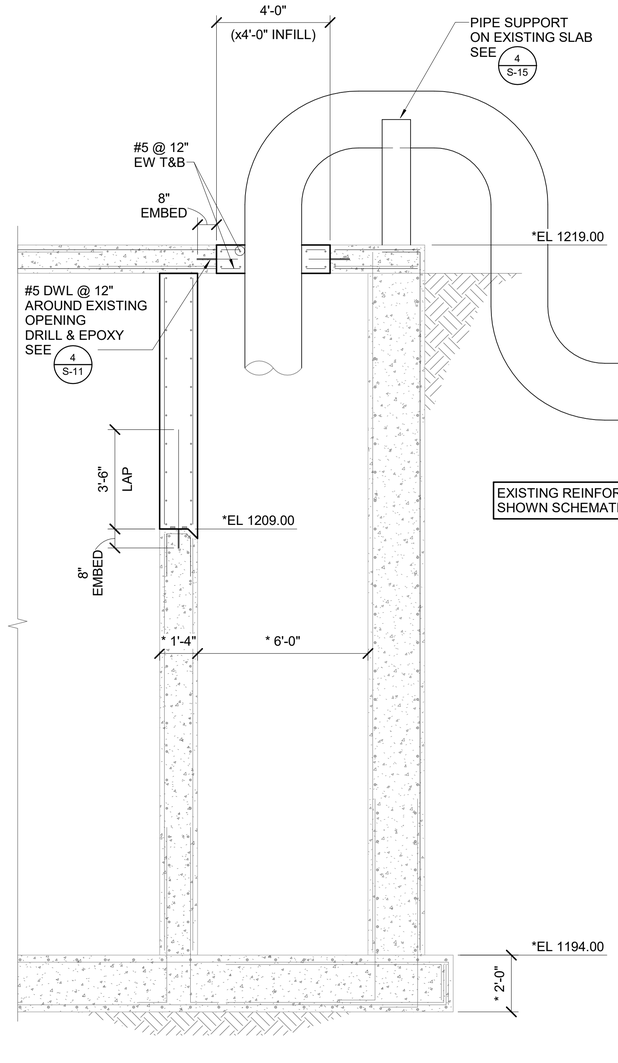

EXISTING REINFORCING
SHOWN SCHEMATIC

* CONTRACTOR TO VERIFY ELEVATIONS AND DIMENSIONS

SECTION 2 / S-1.61

3/8" = 1'-0"

1620 West Fountainhead Pkwy
Suite 501
Tempe, Arizona 85282
Phone: (480) 893-8860

Improving Arizona's
Infrastructure Since 1942

WILSON ENGINEERS

CITY OF CHANDLER
WATER RECLAMATION FACILITY
STRUCTURAL
CHLORINE CONTACT BASIN
SECTIONS AND DETAILS 1

CITY PROJECT NO. WW1901.203
WILSON PROJECT NO. 21007

Design: SJN	Drawn: MWK	Checked: TFW
Date: 02/2022	Wilson Project No. 21007	

Rev#	Date	Description	By

VERIFY SCALES
BAR IS ONE INCH ON ORIGINAL DRAWING
0 1"
IF NOT ONE INCH ON THIS SHEET, ADJUST SCALES ACCORDINGLY



GANNETT FLEMING

Sheet No. S-1.62

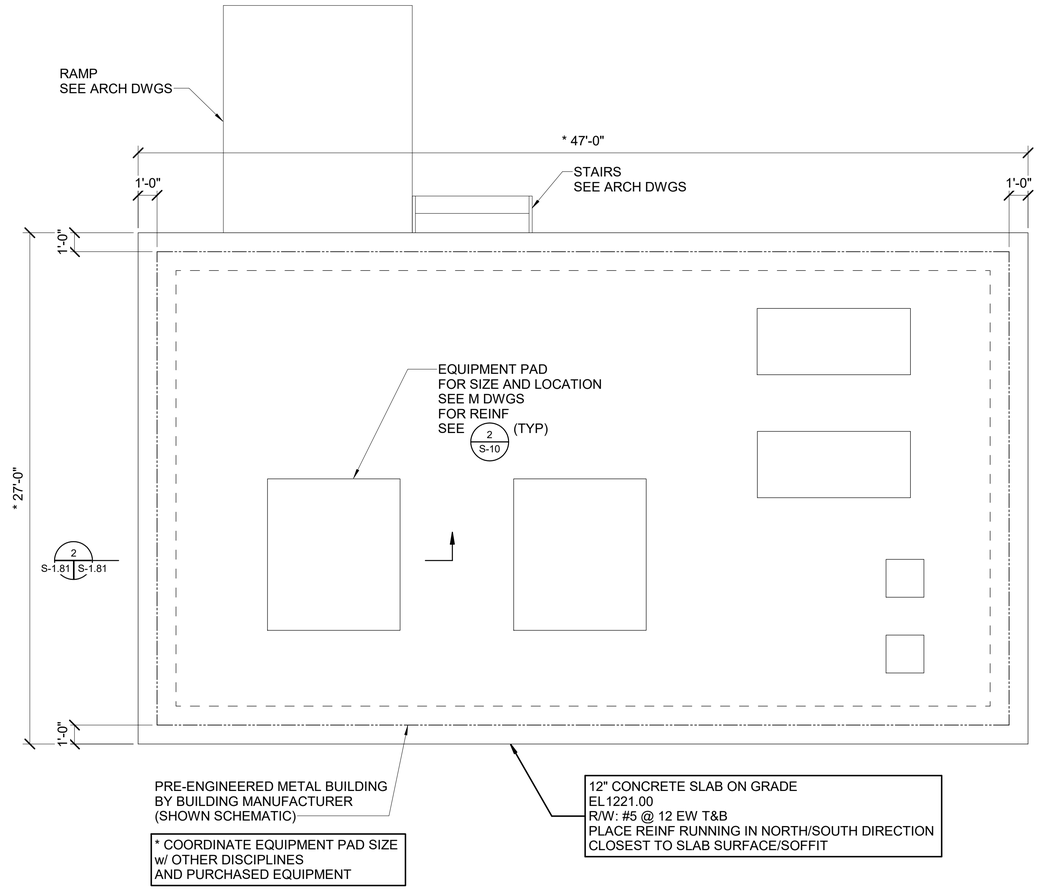

BLOWER BUILDING FOUNDATION PLAN

1/4" = 1'-0"

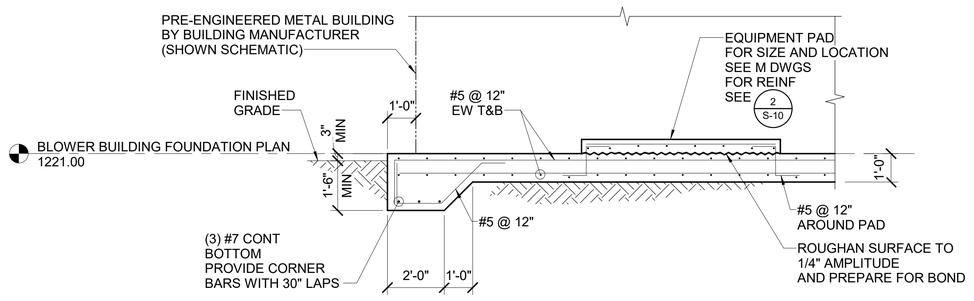

SECTION 2 S-1.81

3/8" = 1'-0"

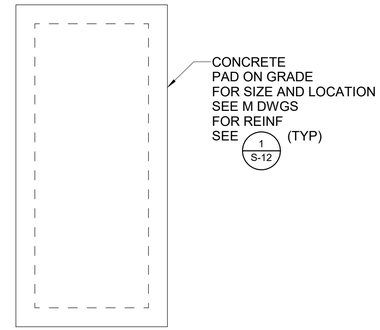

1620 West Fountainhead Pkwy
Suite 501
Tempe, Arizona 85282
Phone: (480) 893-8860

Improving Arizona's
Infrastructure Since 1942

WILSON ENGINEERS

CITY OF CHANDLER
WATER RECLAMATION FACILITY
STRUCTURAL
RWIF BLOWER BUILDING
FOUNDATION PLAN

CITY PROJECT NO. WW1901.203
WILSON PROJECT NO. 21007

Design: SJN
Date: 02/2022
Drawn: MWK
Wilson Project No. 21007
Checked: TFW

Rev#	Date	Description	By

VERIFY SCALES
BAR IS ONE INCH ON ORIGINAL DRAWING
0 1"
IF NOT ONE INCH ON THIS SHEET, ADJUST SCALES ACCORDINGLY



GANNETT FLEMING

Sheet No. S-1.81

AGENCY REVIEW

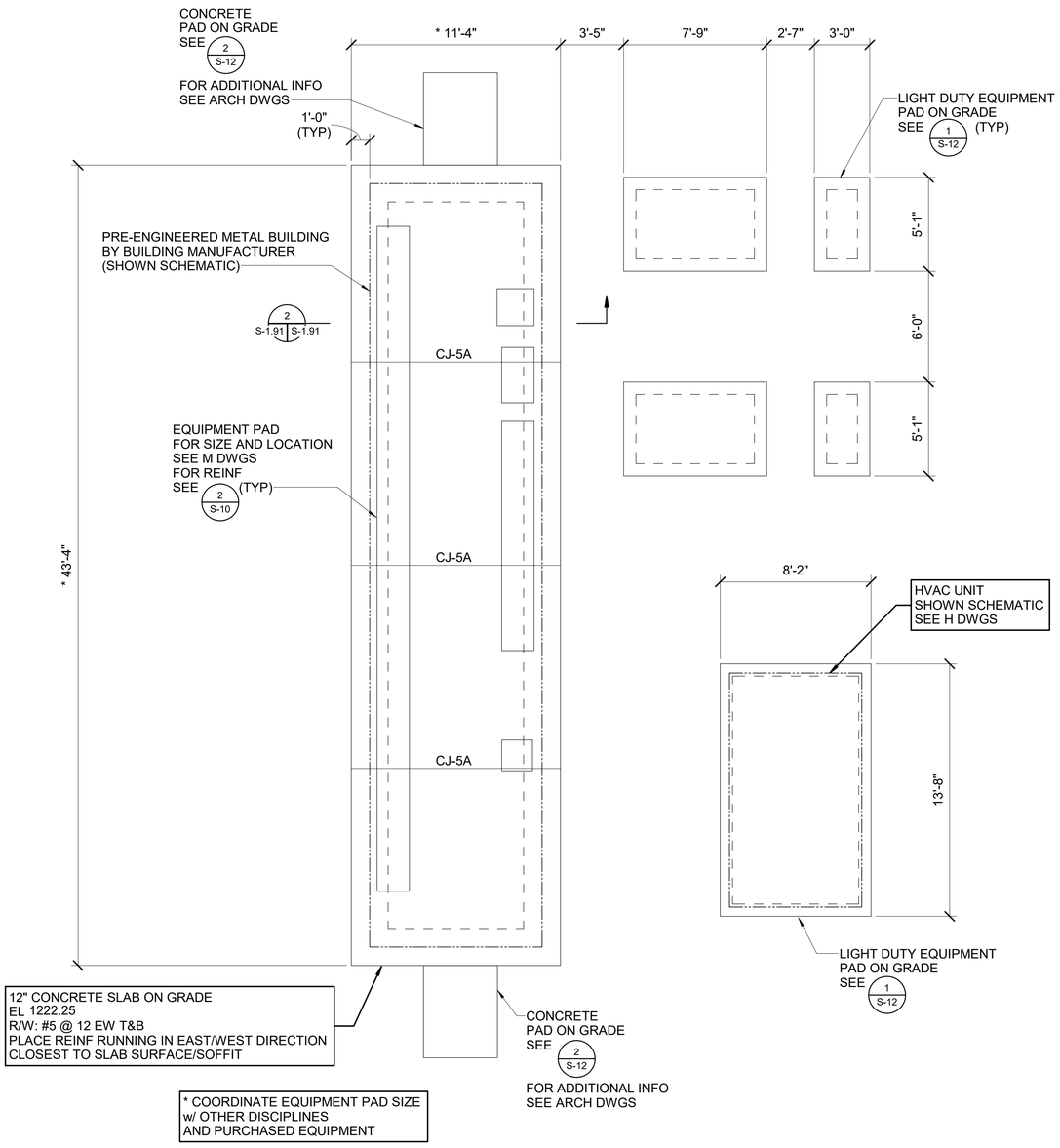

ELECTRICAL BUILDING FOUNDATION PLAN

1/4" = 1'-0"

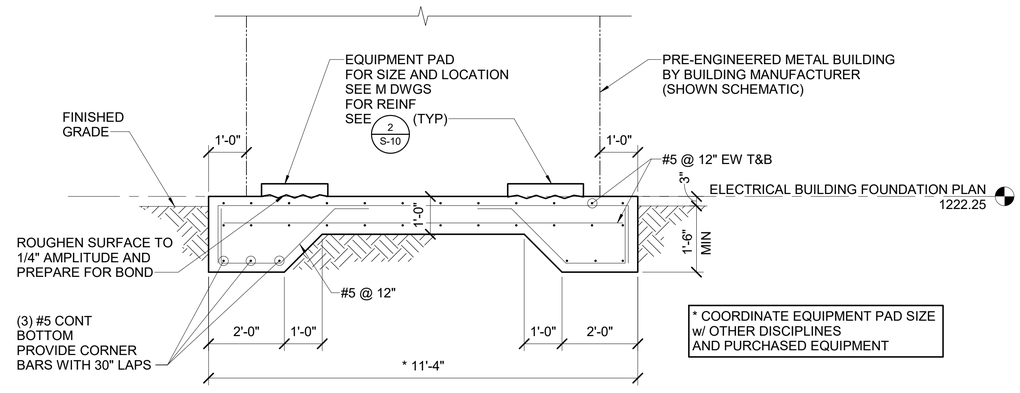

SECTION 2 S-1.91

1/2" = 1'-0"

1620 West Fountainhead Pkwy
Suite 501
Tempe, Arizona 85282
Phone: (480) 893-8860

Improving Arizona's
Infrastructure Since 1942

WILSON ENGINEERS

CITY OF CHANDLER
WATER RECLAMATION FACILITY
STRUCTURAL
RWIF ELECTRICAL BUILDING
FOUNDATION PLAN

CITY PROJECT NO.WW1901.203
WILSON PROJECT NO. 21007

Design: SJN	Drawn: MWK	Checked: TFW
Date: 02/2022	Wilson Project No. 21007	

Rev#	Date	Description	By

VERIFY SCALES
BAR IS ONE INCH ON ORIGINAL DRAWING
0 1"
IF NOT ONE INCH ON THIS SHEET, ADJUST SCALES ACCORDINGLY

Registered Professional Engineer
CERTIFICATE NO.
35234
TIM F. WONG
Date Signed 2/24/2022
ARIZONA, U.S.A.

GANNETT FLEMING

Sheet No. S-1.91

AGENCY REVIEW

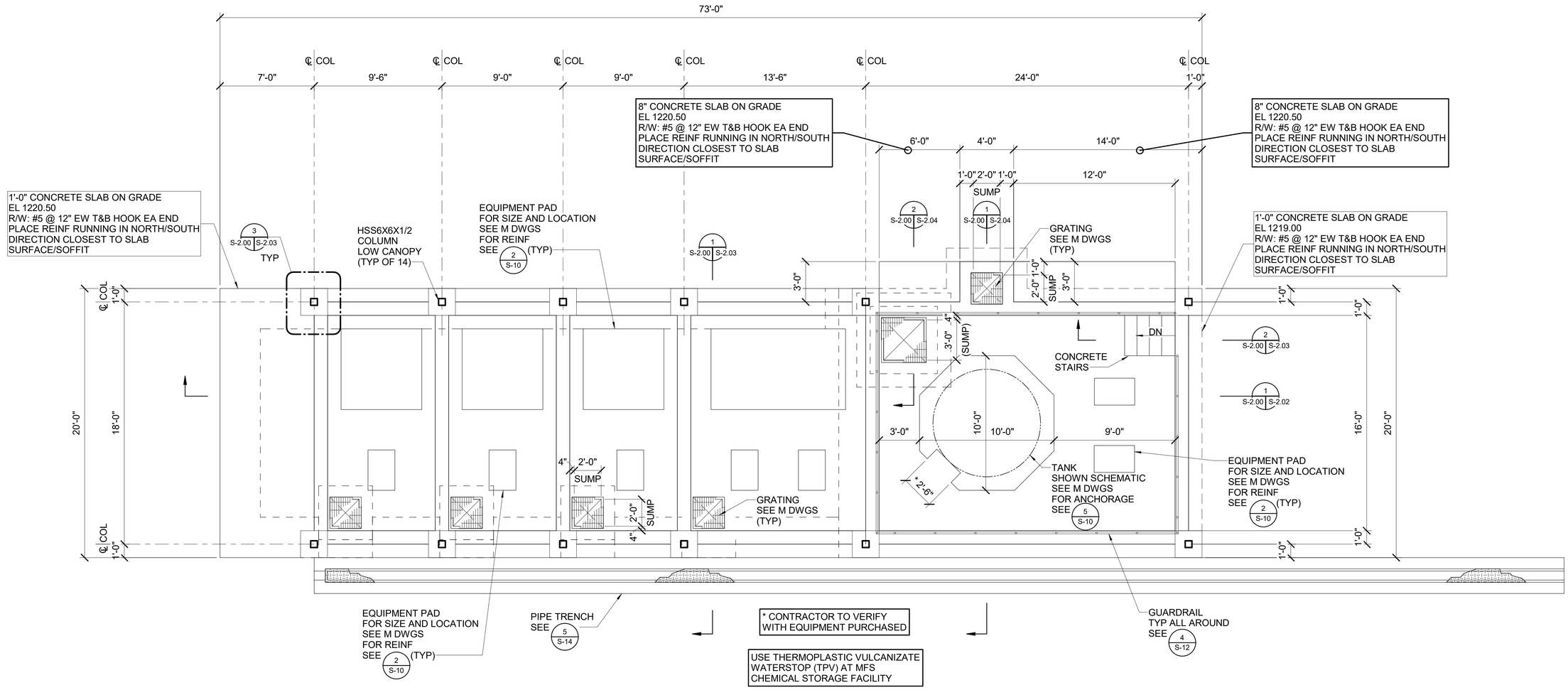

CHEMICAL STORAGE FOUNDATION PLAN

1/4" = 1'-0"

GANNETT FLEMING

1620 West Fountainhead Pkwy
Suite 501
Tempe, Arizona 85282
Phone: (480) 893-8860

Improving Arizona's Infrastructure Since 1942

WILSON ENGINEERS

CITY OF CHANDLER
WATER RECLAMATION FACILITY
STRUCTURAL
MFS CHEMICAL STORAGE FACILITY
FOUNDATION PLAN

CITY PROJECT NO.WW1901.203
WILSON PROJECT NO. 21007

Design: SJN	Drawn: MWK	Checked: TFW
Date: 02/2022	Wilson Project No. 21007	

Rev#	Date	Description	By

VERIFY SCALES

BAR IS ONE INCH ON ORIGINAL DRAWING

0 — 1"

IF NOT ONE INCH ON THIS SHEET, ADJUST SCALES ACCORDINGLY

Registered Professional Engineer
CERTIFICATE NO.
35234
TIM F. WONG
Date Signed 2/24/2022
ARIZONA, U.S.A.

Sheet No. S-2.00

AGENCY REVIEW

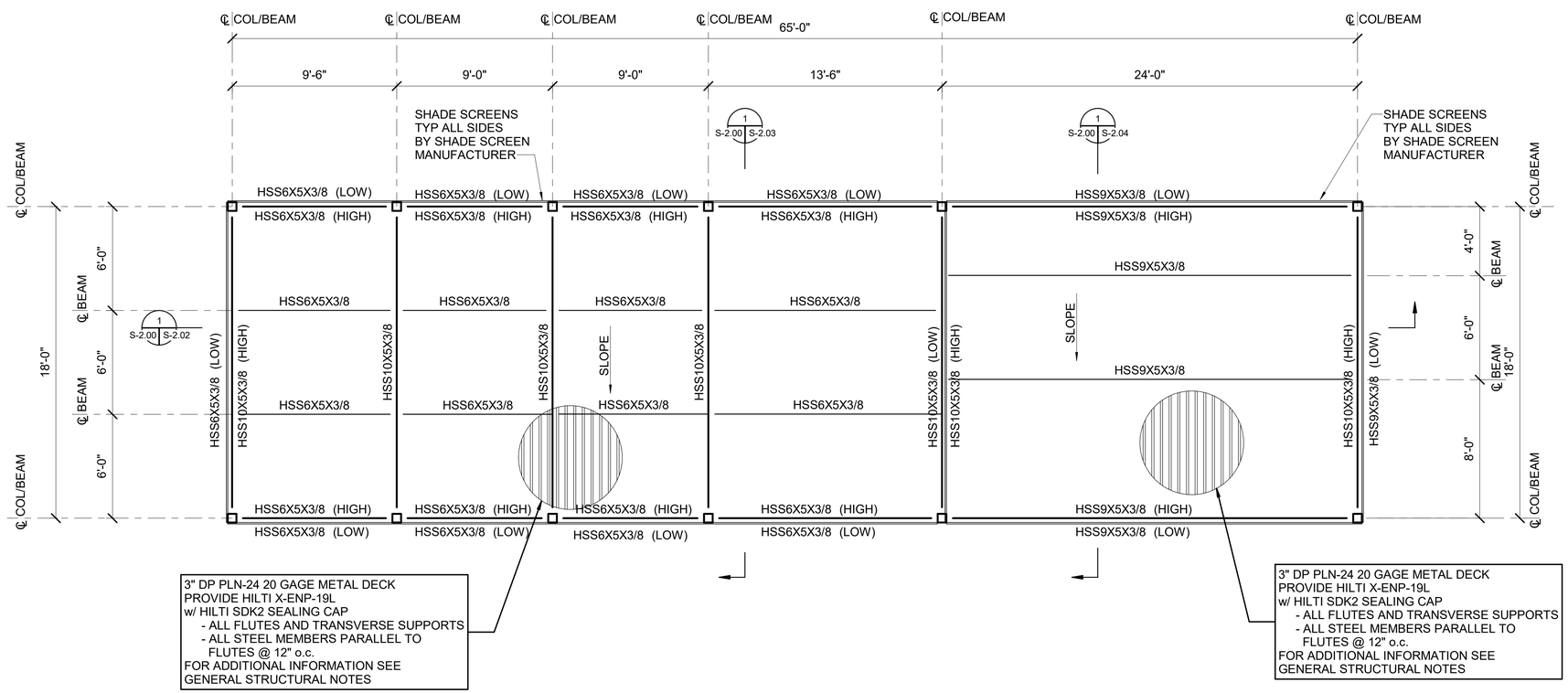

CHEMICAL CANOPY PLAN

1/4" = 1'-0"

1620 West Fountainhead Pkwy
Suite 501
Tempe, Arizona 85282
Phone: (480) 893-8860

Improving Arizona's
Infrastructure Since 1942

WILSON ENGINEERS

CITY OF CHANDLER
WATER RECLAMATION FACILITY
STRUCTURAL
MFS CHEMICAL STORAGE FACILITY
CHEMICAL CANOPY PLAN

CITY PROJECT NO.WW1901.203
WILSON PROJECT NO. 21007

Design: SJN
Date: 02/2022
Drawn: MWK
Wilson Project No. 21007
Checked: TFW

Rev#	Date	Description	By

VERIFY SCALES

BAR IS ONE INCH ON ORIGINAL DRAWING

0 1"

IF NOT ONE INCH ON THIS SHEET, ADJUST SCALES ACCORDINGLY

Registered Professional Engineer
CERTIFICATE NO.
35234
TIM F. WONG
Date Signed 2/24/2022
ARIZONA, U.S.A.

GANNETT FLEMING

Sheet No. S-2.01

AGENCY REVIEW

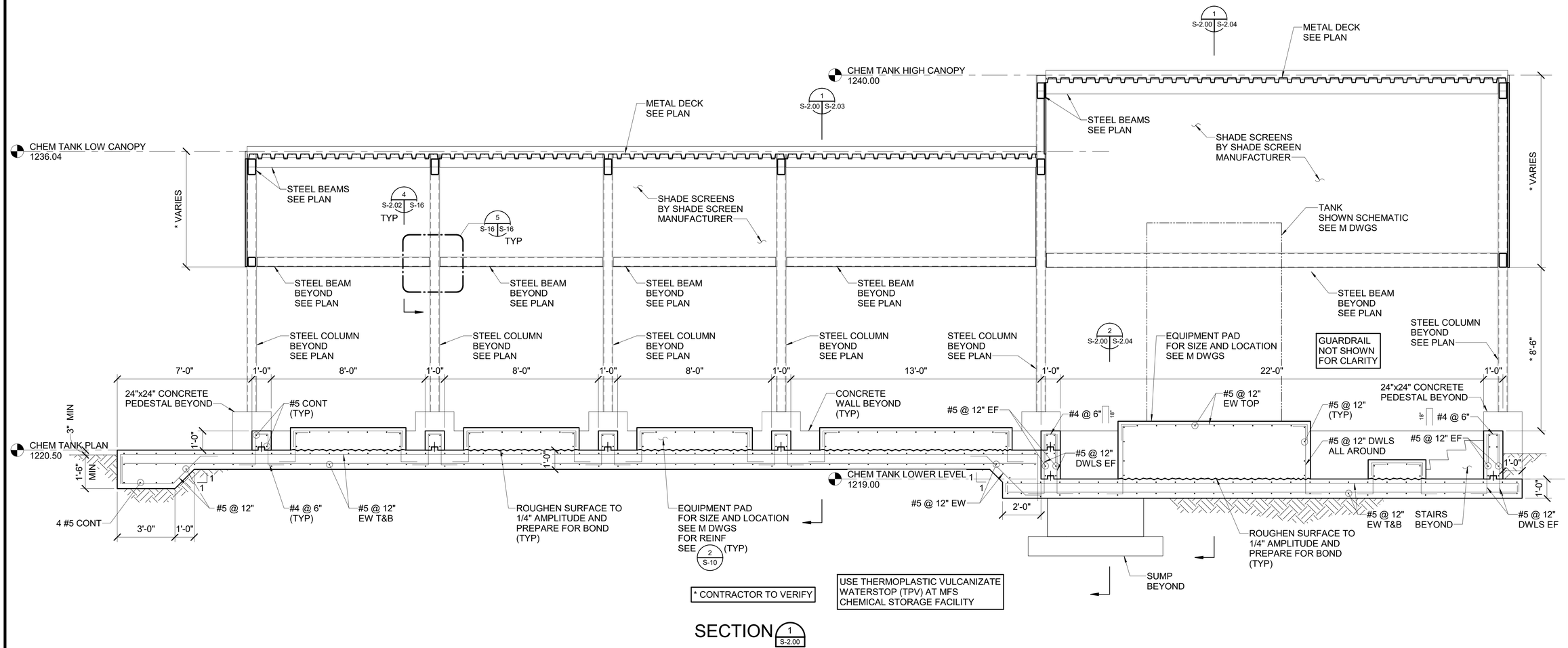

* CONTRACTOR TO VERIFY

USE THERMOPLASTIC VULCANIZATE WATERSTOP (TPV) AT MFS CHEMICAL STORAGE FACILITY

SECTION 1 S-2.00

3/8" = 1'-0"

GANNETT FLEMING

1620 West Fountainhead Pkwy
Suite 501
Tempe, Arizona 85282
Phone: (480) 893-8860

Improving Arizona's Infrastructure Since 1942

WILSON ENGINEERS

CITY OF CHANDLER
WATER RECLAMATION FACILITY
STRUCTURAL
MFS CHEMICAL STORAGE FACILITY
SECTIONS AND DETAILS 1

CITY PROJECT NO.WW1901.203
WILSON PROJECT NO. 21007

Design: SJN	Drawn: MWK	Checked: TFW
Date: 02/2022	Wilson Project No. 21007	

Rev#	Date	Description	By

VERIFY SCALES

BAR IS ONE INCH ON ORIGINAL DRAWING

0 1"

IF NOT ONE INCH ON THIS SHEET, ADJUST SCALES ACCORDINGLY

Registered Professional Engineer
CERTIFICATE NO.
35234
TIM F. WONG
Date Signed 2/24/2022
ARIZONA, U.S.A.

Sheet No. S-2.02

AGENCY REVIEW

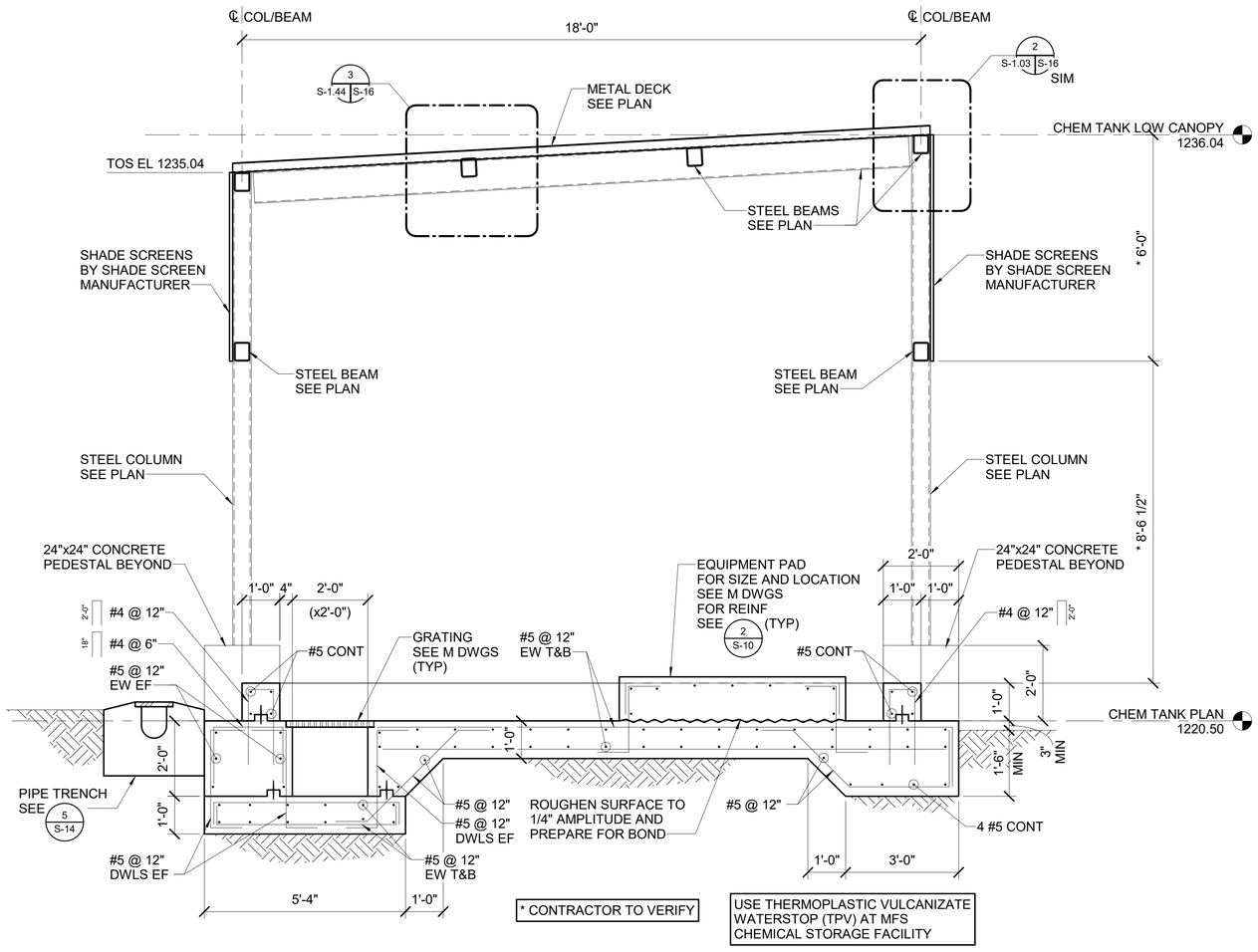

* CONTRACTOR TO VERIFY

USE THERMOPLASTIC VULCANIZATE WATERSTOP (TPV) AT MFS CHEMICAL STORAGE FACILITY

SECTION 1/S-2.00

1/2" = 1'-0"

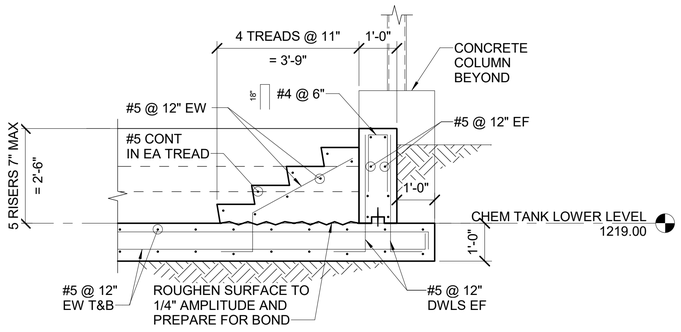

SECTION 2/S-2.00

1/2" = 1'-0"

2'-0" x 2'-0" CONCRETE COLUMN/PEDESTAL
R/W: 12 #5 VERTS
#4 TIE SETS @ 10" o.c.

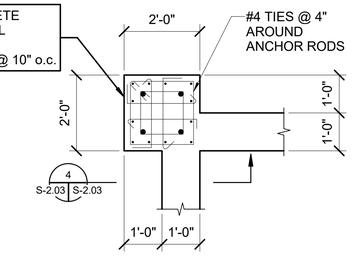

PLAN VIEW
PEDESTAL REINFORCING

BASE PL 1 1/4x16"x1'-4"
w/ (4) 1" DIA x 2'-2"
F1554 ANCHOR RODS
(PROVIDE 6" PROJECTION+
18" EMBEDMENT w/ HEAVY
HEX NUT AT EMBEDMENT END)

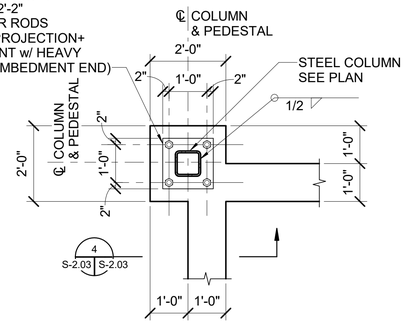

PLAN VIEW
COLUMN BASE PLATE

NOTE:
LOCATION OF ANCHOR RODS
IS CRITICAL USE TEMPLATES.
DRILL & EPOXY IS NOT AN OPTION
MIS-LOCATED ANCHOR RODS WILL
REQUIRE REMOVAL & REPLACEMENT
OF PILASTER AND SOME WALL.

DETAIL 3/S-2.03

1/2" = 1'-0"

12" CONCRETE WALLS
NOT SHOWN FOR CLARITY

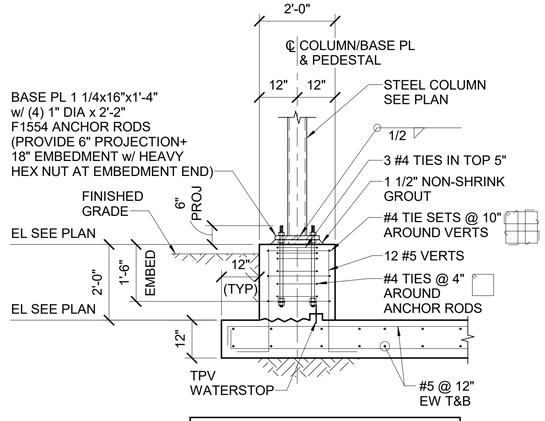

BASE PL 1 1/4x16"x1'-4"
w/ (4) 1" DIA x 2'-2"
F1554 ANCHOR RODS
(PROVIDE 6" PROJECTION+
18" EMBEDMENT w/ HEAVY
HEX NUT AT EMBEDMENT END)

NOTE:
LOCATION OF ANCHOR RODS
IS CRITICAL USE TEMPLATES.
DRILL & EPOXY IS NOT AN OPTION
MIS-LOCATED ANCHOR RODS WILL
REQUIRE REMOVAL & REPLACEMENT
OF PILASTER AND SOME WALL.

SECTION 4/S-2.03

1/2" = 1'-0"

GANNETT FLEMING

WILSON ENGINEERS
1620 West Fountainhead Pkwy
Suite 501
Tempe, Arizona 85282
Phone: (480) 893-8860
Improving Arizona's
Infrastructure Since 1942

CITY OF CHANDLER
WATER RECLAMATION FACILITY
STRUCTURAL
MFS CHEMICAL STORAGE FACILITY
SECTIONS AND DETAILS 2

CITY PROJECT NO.WW1901.203
WILSON PROJECT NO. 21007

Design: SJN	Drawn: MWK	Checked: TFW
Date: 02/2022	Wilson Project No. 21007	

Rev#	Date	Description	By

VERIFY SCALES
BAR IS ONE INCH ON ORIGINAL DRAWING
0 1"
IF NOT ONE INCH ON THIS SHEET, ADJUST SCALES ACCORDINGLY

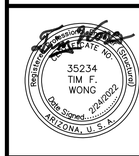

Sheet No. S-2.03

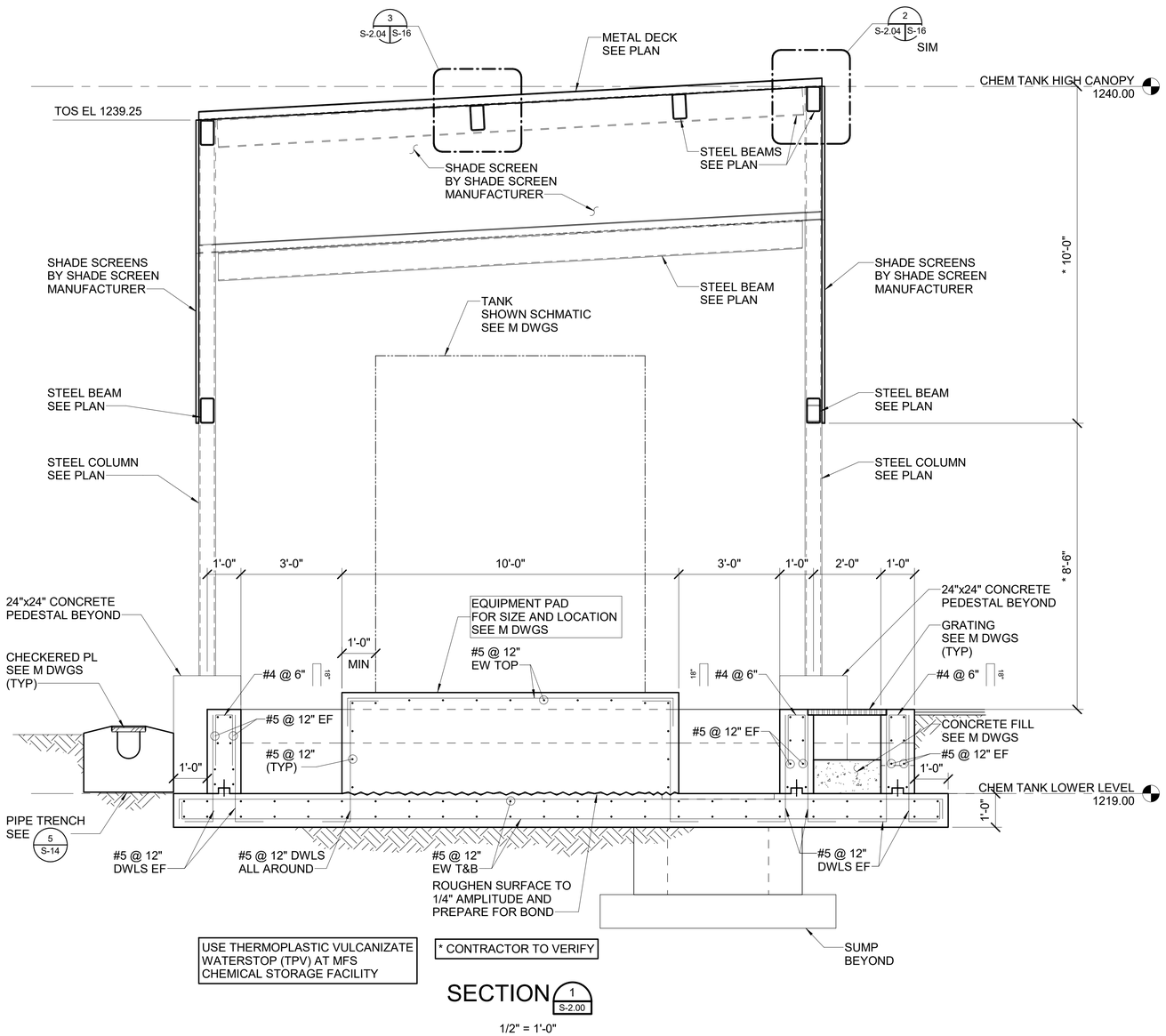

SECTION 1 S-2.00

1/2" = 1'-0"

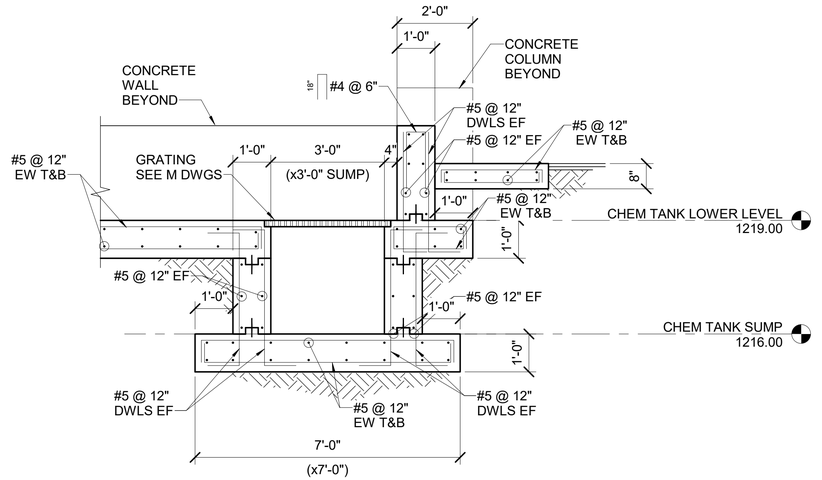

SECTION 2 S-2.00

1/2" = 1'-0"

1620 West Fountainhead Pkwy
Suite 501
Tempe, Arizona 85282
Phone: (480) 893-8860

Improving Arizona's
Infrastructure Since 1942

WILSON ENGINEERS

CITY OF CHANDLER
WATER RECLAMATION FACILITY
STRUCTURAL
MFS CHEMICAL STORAGE FACILITY
SECTIONS AND DETAILS 3

CITY PROJECT NO. WW1901.203
WILSON PROJECT NO. 21007

Design: SJN	Drawn: MWK	Checked: TFW
Date: 02/2022	Wilson Project No. 21007	

Rev#	Date	Description	By

VERIFY SCALES

BAR IS ONE INCH ON ORIGINAL DRAWING

0 1"

IF NOT ONE INCH ON THIS SHEET, ADJUST SCALES ACCORDINGLY

Professional Engineer
CERTIFICATE NO. 35234
35234
TIM F. WONG
Date Signed 2/24/2022
ARIZONA, U.S.A.

GANNETT FLEMING

Sheet No. S-2.04

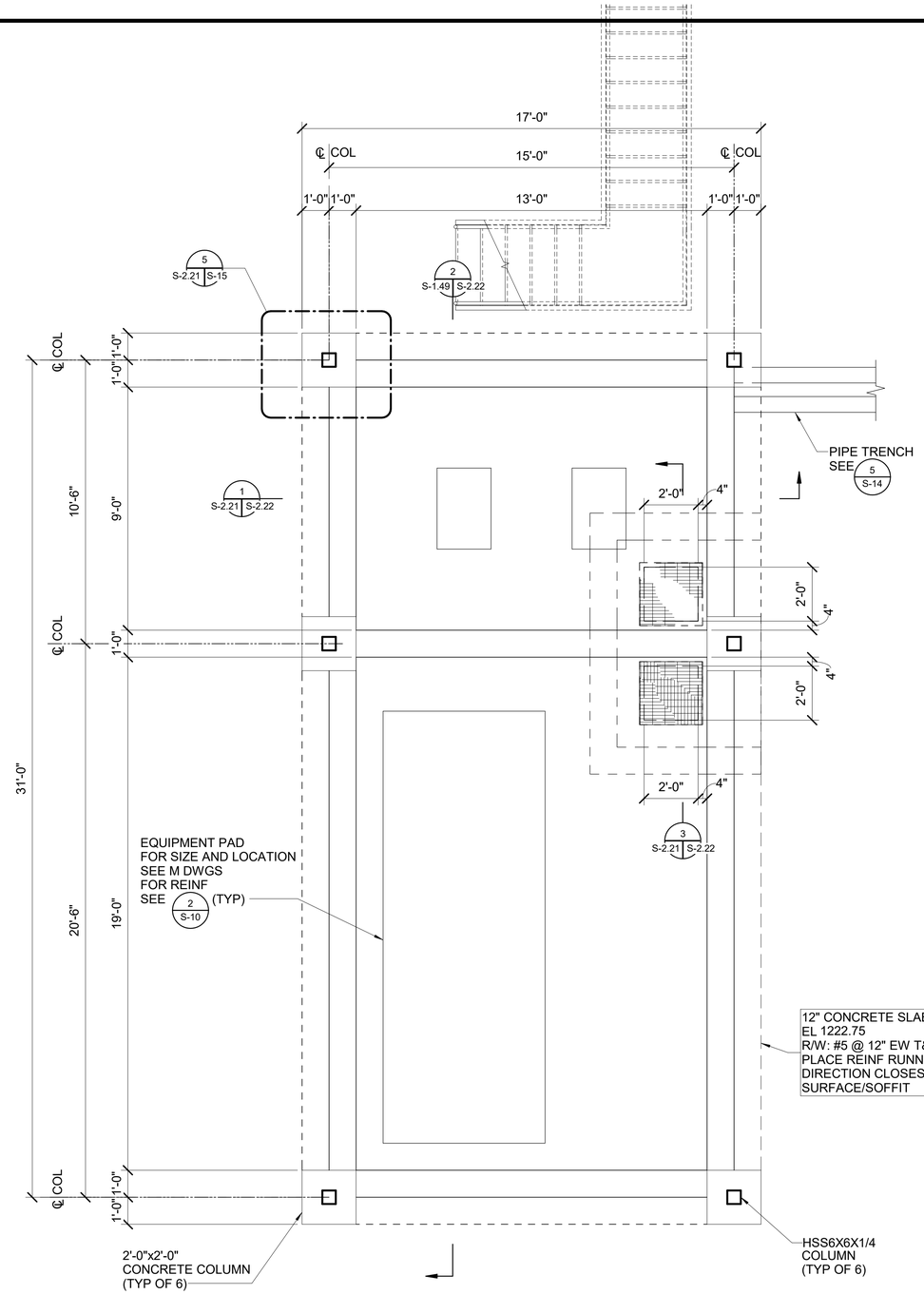

ACH FACILITY LOWER PLAN

3/8" = 1'-0"

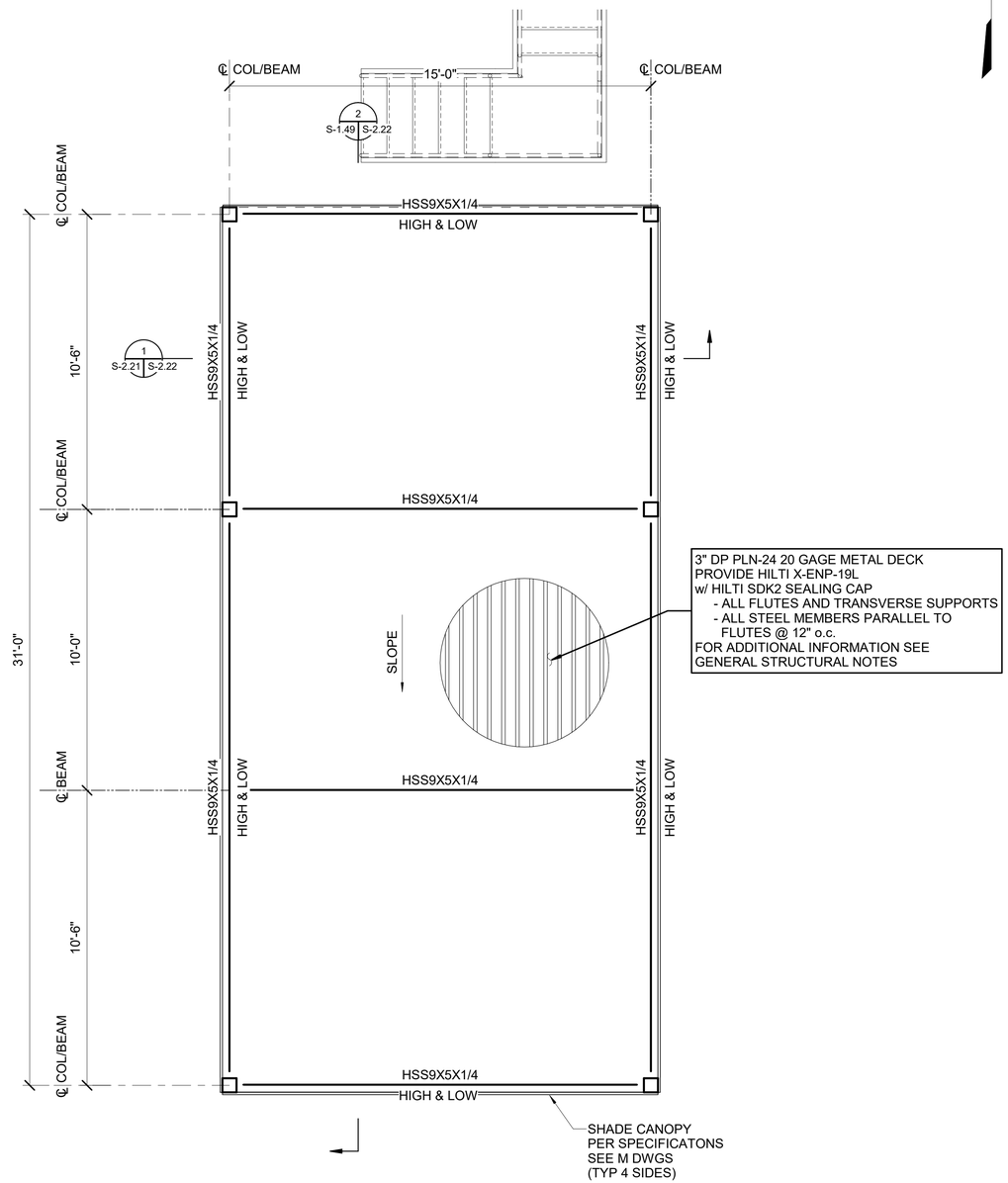

ACH FACILITY CANOPY PLAN

3/8" = 1'-0"

WILSON ENGINEERS

1620 West Fountainhead Pkwy
Suite 501
Tempe, Arizona 85282
Phone: (480) 893-8860

Improving Arizona's
Infrastructure Since 1942

CITY OF CHANDLER
WATER RECLAMATION FACILITY
STRUCTURAL
ACH STORAGE FACILITY
OVERALL AND CANOPY PLAN

CITY PROJECT NO.WW1901.203
WILSON PROJECT NO. 21007

Design: SJN	Drawn: MWK	Checked: TFW
Date: 02/2022	Wilson Project No. 21007	

Rev#	Date	Description	By

VERIFY SCALES

BAR IS ONE INCH ON ORIGINAL DRAWING

0 1"

IF NOT ONE INCH ON THIS SHEET, ADJUST SCALES ACCORDINGLY



Sheet No. S-2.21

GANNETT FLEMING

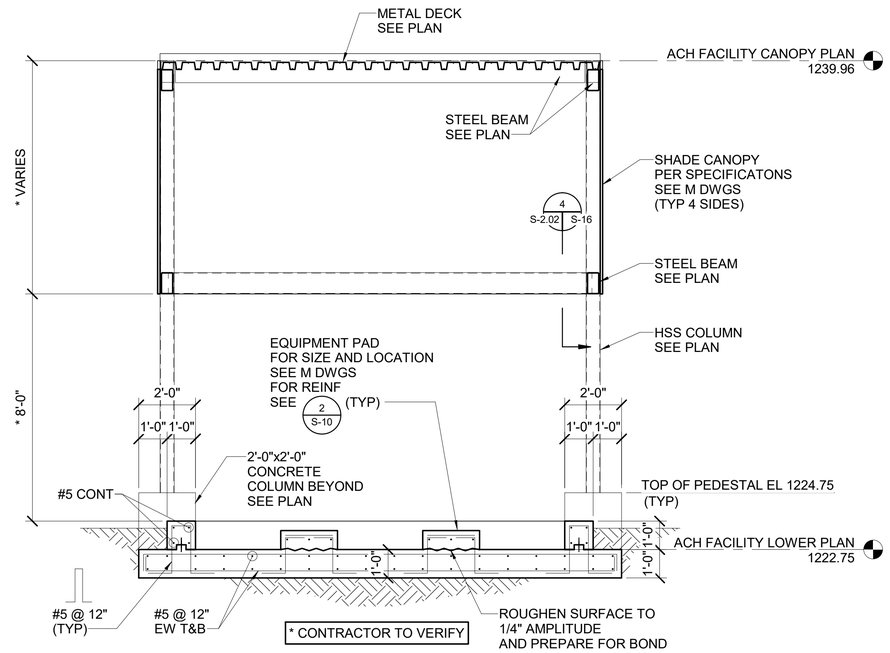

SECTION 1 S-2.21

3/8" = 1'-0"

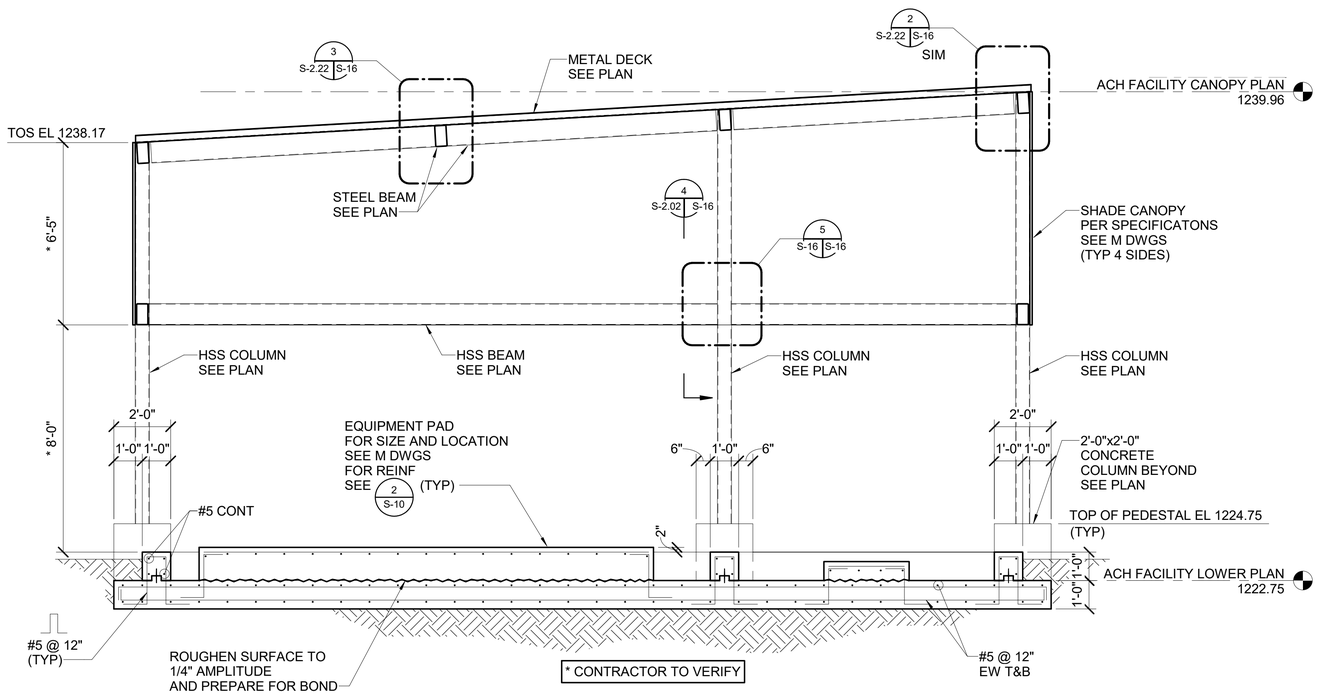

SECTION 2 S-1.49

3/8" = 1'-0"

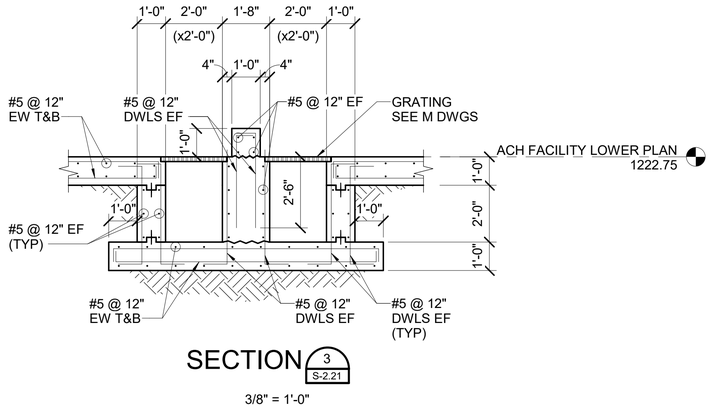

SECTION 3 S-2.21

3/8" = 1'-0"

1620 West Fountainhead Pkwy
Suite 501
Tempe, Arizona 85282
Phone: (480) 893-8860
Improving Arizona's
Infrastructure Since 1942

WILSON ENGINEERS

CITY OF CHANDLER
WATER RECLAMATION FACILITY
STRUCTURAL
ACH STORAGE FACILITY
SECTIONS AND DETAILS 1

CITY PROJECT NO.WW1901.203
WILSON PROJECT NO. 21007

Design: SJN	Drawn: MWK	Checked: TFW
Date: 02/2022	Wilson Project No. 21007	

Rev#	Date	Description	By

VERIFY SCALES
BAR IS ONE INCH ON ORIGINAL DRAWING
0 1"
IF NOT ONE INCH ON THIS SHEET, ADJUST SCALES ACCORDINGLY



Sheet No. S-2.22

GANNETT FLEMING

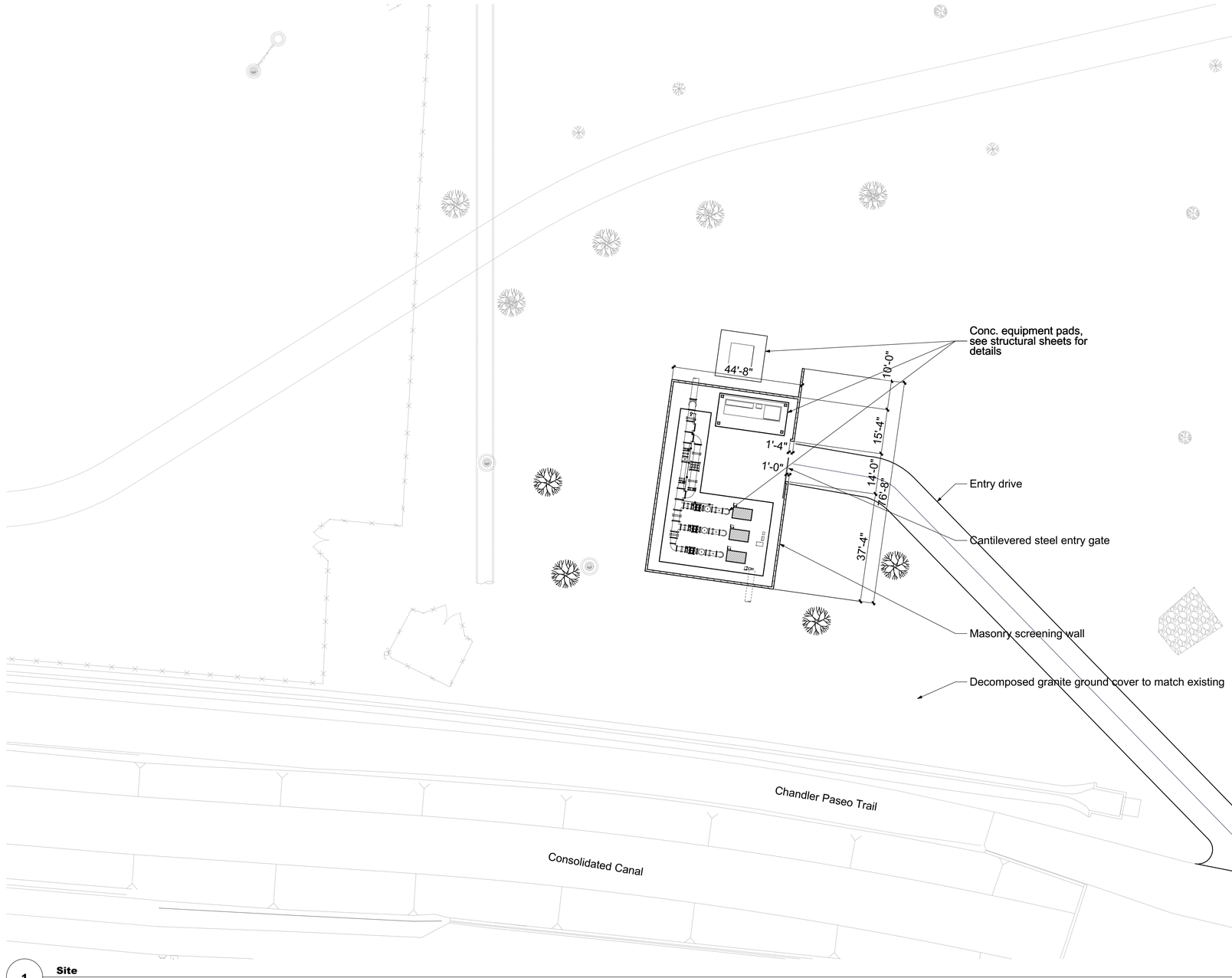

1 **Site**
SCALE: 1" = 20'

KEYED NOTES

Proposis Velutine (Native Mesquite)

WILSON ENGINEERS
1620 West Fountainhead Pkwy
Suite 501
Tempe, Arizona 85282
Phone: (480) 893-8860
Improving Arizona's Infrastructure Since 1942

CITY OF CHANDLER
RECLAIMED WATER INTERCONNECT FACILITY

RWIF RAW WATER PUMP STATION
MASONRY WALL PLAN VIEW

CITY PROJECT NO. WW1901.203
WILSON PROJECT NO. 21007

Design: Date: 02/2022
Drawn: Wilson
Checked:
Project No.: 21007

Revision	Date	Description	By

VERIFY SCALES
BAR IS ONE INCH ON ORIGINAL DRAWING
0 1"
IF NOT ONE INCH ON THIS SHEET, ADJUST SCALES ACCORDINGLY

REGISTERED ARCHITECT
CERTIFICATE NO.
22434
ROBERT G. GRAHAM
2/21/22
Date Signed
ARIZONA, U.S.A.

Sheet No. A-1.01

MOTLEY
Design Group, LLC
Architecture - Historic Preservation - Planning - Landscape Design
1114 Grand Avenue - Phoenix AZ 85007 - 602.254.5599 - motleydesigngroup.com

AGENCY REVIEW

XREFS:

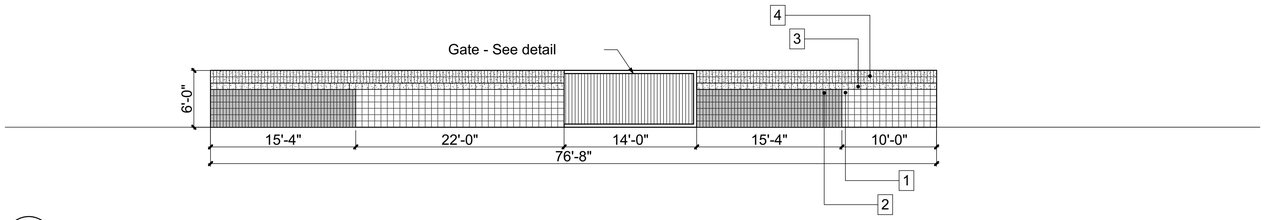

1-N **North Elevation**
SCALE: 1/8" = 1'-0"

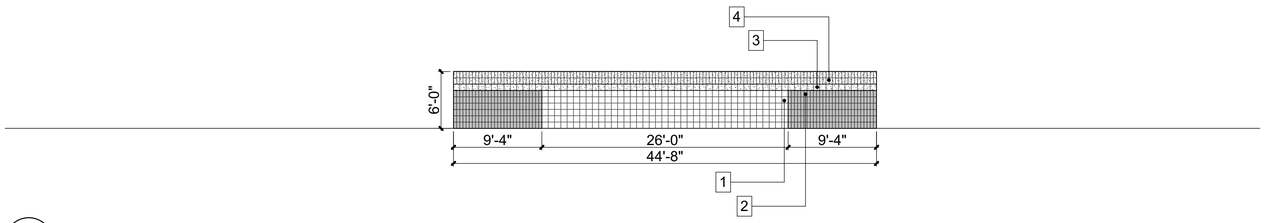

1-E **East Elevation**
SCALE: 1/8" = 1'-0"

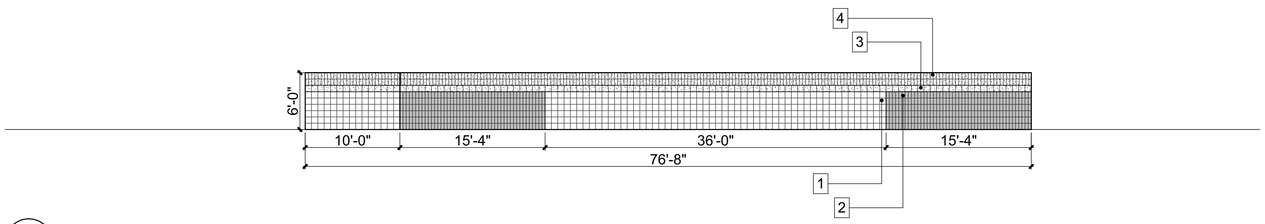

1-S **South Elevation**
SCALE: 1/8" = 1'-0"

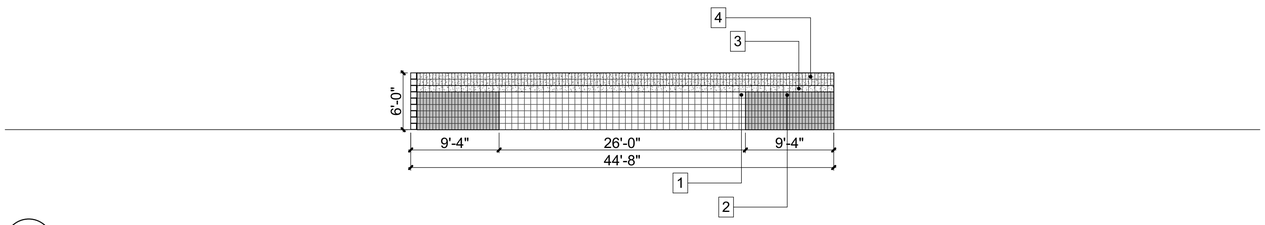

1-W **West Elevation**
SCALE: 1/8" = 1'-0"

KEYED NOTES

1. 8x8x16 Regular CMU block - Purple Haze color, single score
2. 8x8x16 Split face Sonora fluted block - Grey color
3. 1 course 8x8x16 Split face block - Grey color, single score
4. 2 Courses 8x8x16 Split face Sonora fluted block - Grey color

MOTLEY
Design Group, LLC
Architecture - Historic Preservation - Planning - Landscape Design
1114 Grand Avenue - Phoenix AZ 85007 - 602.254.5599 - motleydesigngroup.com

1620 West Fountainhead Pkwy
Suite 501
Tempe, Arizona 85282
Phone: (480) 893-8860
Improving Arizona's Infrastructure Since 1942
WILSON ENGINEERS

CITY OF CHANDLER
RECLAIMED WATER INTERCONNECT FACILITY

RWIF RAW WATER PUMP STATION
MASONRY WALL ELEVATIONS

CITY PROJECT NO. WW1901.203
WILSON PROJECT NO. 21007

Design:
Date: 02/2022
Drawn:
Wilson Project No.: 21007
Checked:

Revision	Date	Description	By

VERIFY SCALES
BAR IS ONE INCH ON ORIGINAL DRAWING
0 1"
IF NOT ONE INCH ON THIS SHEET, ADJUST SCALES ACCORDINGLY

REGISTERED ARCHITECT
CERTIFICATE NO.
22434
ROBERT G. GRAHAM
2/21/22
Date Signed
ARIZONA, U.S.A.

Sheet No. A-1.02

AGENCY REVIEW

XREFS:
G:\PROJECT\21007\CADD\DESIGN\BASEFILES\TB-WE-D.DWG, 1/25/2022 5:12:50 PM, jjohnson, 1:1.011556



PLAN VIEW

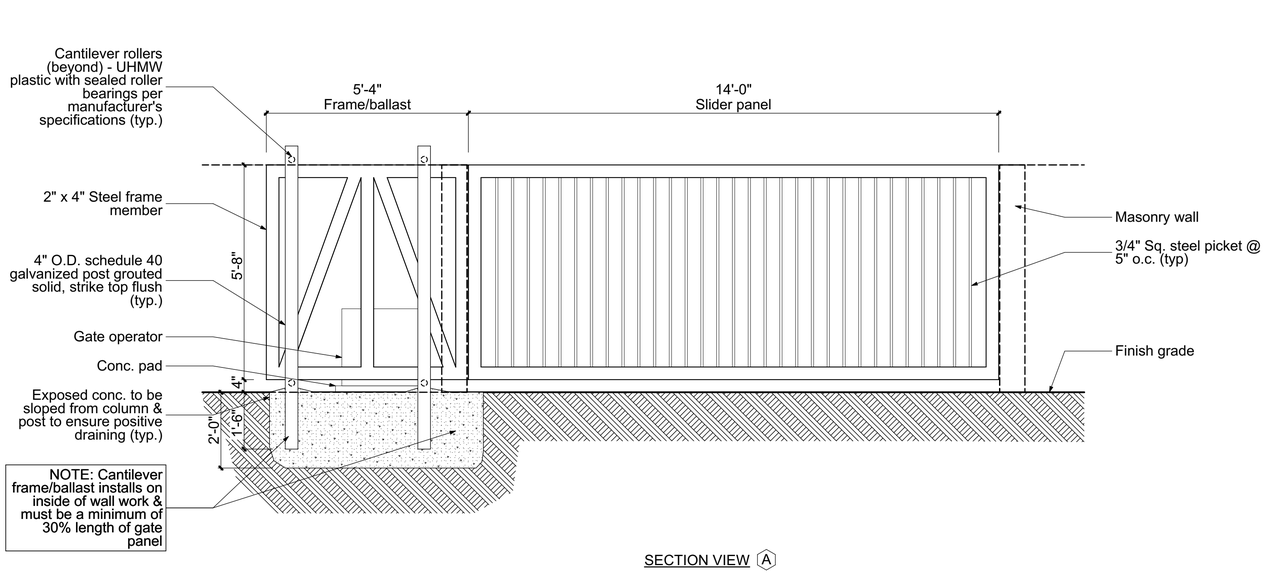

SECTION VIEW (A)

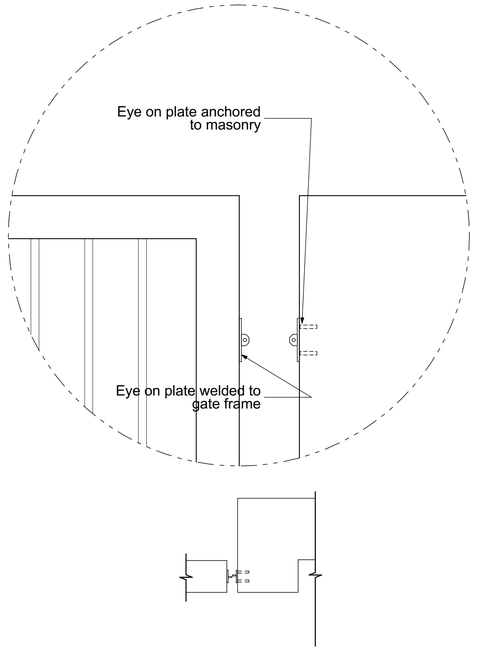

Steel eyes mounted to steel gate and masonry wall to allow padlocking of entry

SECURABLE GATE CLOSURE

1 **Steel Cantilevered Gate**

NOT TO SCALE

KEYED NOTES

(A) Contractor to submit final shop drawings and specifications of gate & installations materials to engineer and/or architect for final approval.

Custom gate of welded steel construction. Square tubular material as specified.

Other materials such as posts, hangars, hinges, closures as specified.

Verify with engineer additional posts or fasteners to be installed to latch gate in open position.

Paint per specifications (typ. all metal gate surface and attachments).

MOTLEY
Design Group, LLC
Architecture - Historic Preservation - Planning - Landscape Design
1114 Grand Avenue - Phoenix AZ 85007 - 602.254.5599 - motleydesigngroup.com

1620 West Fountainhead Pkwy
Suite 501
Tempe, Arizona 85282
Phone: (480) 893-8860
Improving Arizona's Infrastructure Since 1942
WILSON ENGINEERS

CITY OF CHANDLER
RECLAIMED WATER INTERCONNECT FACILITY

RWIF RAW WATER PUMP STATION
GATE DETAILS

CITY PROJECT NO. WW1901.203
WILSON PROJECT NO. 21007

Design:	Drawn:	Checked:
Date: 02/2022	Wilson Project No.: 21007	

Revision	Date	Description	By

VERIFY SCALES
BAR IS ONE INCH ON ORIGINAL DRAWING
0 1"
IF NOT ONE INCH ON THIS SHEET, ADJUST SCALES ACCORDINGLY

REGISTERED ARCHITECT
CERTIFICATE NO.
22434
ROBERT G. GRAHAM
2/21/22
Date Signed
ARIZONA, U.S.A.

Sheet No. A-1.03

AGENCY REVIEW

XREFS:

G:\PROJECT\21007\CADD\DESIGN\BASEFILES\TB-WE-D.DWG, 1/25/2022 5:12:50 PM, jjohnson, 1:1.011556

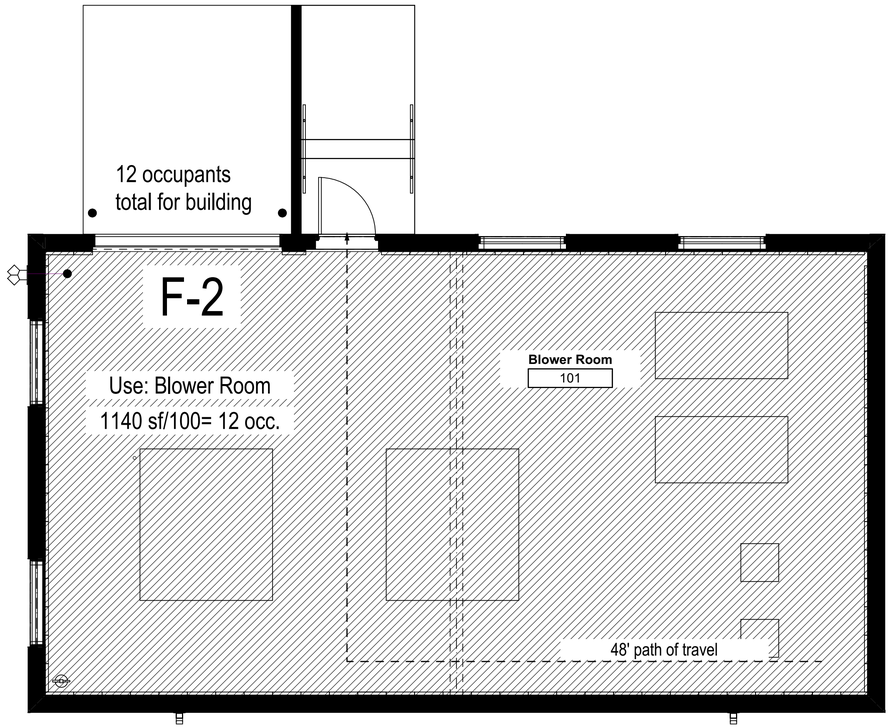

2 Blower Room Code Plan

SCALE: 1/4" = 1'-0"

NORTH

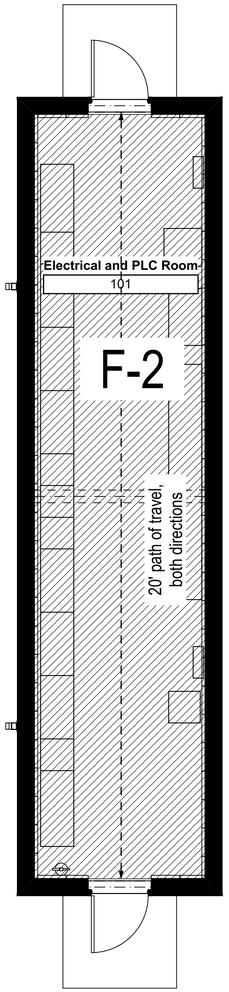

3 Electrical and PLC Room Code Plan

SCALE: 1/4" = 1'-0"

NORTH

BUILDING CODE DATA

APPLICABLE CODES

(All with City of Chandler amendments current as of the date of these drawings where applicable):

- 2018 International Building Code (IBC)
- 2018 International Fire Code (IFC)
- 2018 International Energy Conservation Code (IECC)
- 2017 National Electrical Code (NEC)
- 2018 International Mechanical Code (IMC)
- 2018 International Plumbing Code (IPC)
- 2018 International Fuel Gas Code (IFGC)

Construction Type: II-B
Occupancy: F-2
Fire Sprinkled: Yes

Basic Allowable Floor area (based on worst case occupancy):
II-B, F-2, One-story Sprinklered: 92,000 s.f.
Provided Gross Floor Area (Blower Room): 1,140 s.f.
Provided Gross Floor Area (Electrical & PLC Room): 367 s.f.

Allowable Height: 4 stories / 75 feet
Provided Height: 1 story / 13 feet

EGRESS

Blower Room Room
Occupant Load: 12
Exit Width Requirement: 12 x 0.2 = 2.4 inches
Exit Width Provided: 36 inches
Exits Required: 1 **Exits Provided:** 1
Travel Distance Limits:
Common Path of Egress Travel: 100' max; 0' provided
Exit Access Travel Distance: 300'; 48' provided

Electrical and PLC Room
Occupant Load: 4
Exit Width Requirement: 4 x 0.2 = 0.8 inches
Exit Width Provided: 36 inches
Exits Required: 1 **Exits Provided:** 2
Travel Distance Limits:
Common Path of Egress Travel: 100' max; 0' provided
Exit Access Travel Distance: 300'; 20' provided

1620 West Fountainhead Pkwy
Suite 501
Tempe, Arizona 85282
Phone: (480) 893-8860
Improving Arizona's Infrastructure Since 1942

WILSON ENGINEERS

CITY OF CHANDLER
RECLAIMED WATER INTERCONNECT FACILITY

RWIF BLOWER BUILDING ARCHITECTURAL CODE SHEET

CITY PROJECT NO. WW1901.203
WILSON PROJECT NO. 21007

By	Description	Date	Revision

Drawn: Wilson Project No.: 21007
Checked:
Design:
Date: 02/2022

VERIFY SCALES
BAR IS ONE INCH ON ORIGINAL DRAWING
0 1"
IF NOT ONE INCH ON THIS SHEET, ADJUST SCALES ACCORDINGLY

REGISTERED ARCHITECT
22434
ROBERT G. GRAHAM
2/11/22
Date Signed
ARIZONA, U.S.A.

MOTLEY
Design Group, LLC
Architecture - Historic Preservation - Planning - Landscape Design
1114 Grand Avenue - Phoenix AZ 85007 - 602.254.5599 - motleydesigngroup.com

Sheet No. A-1.71

AGENCY REVIEW

XREFS:

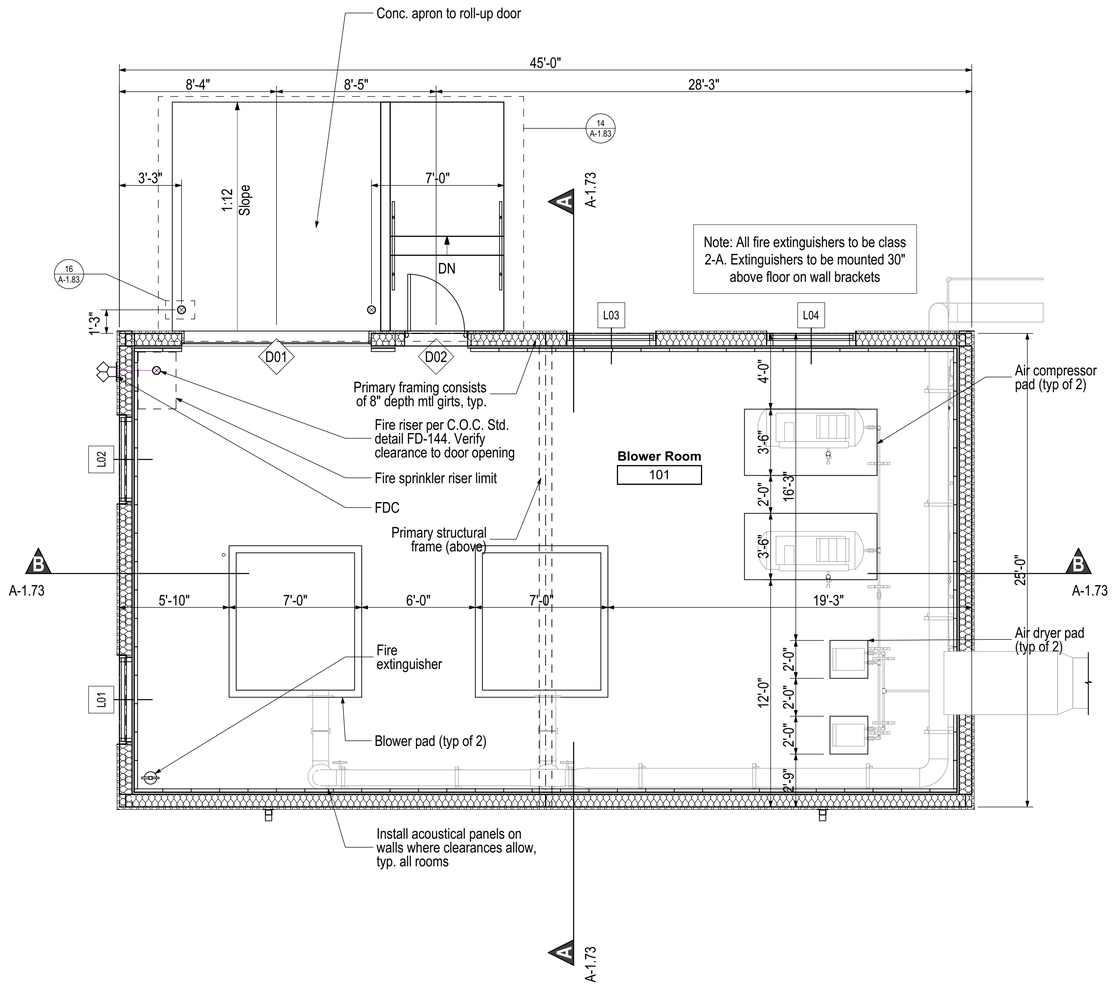

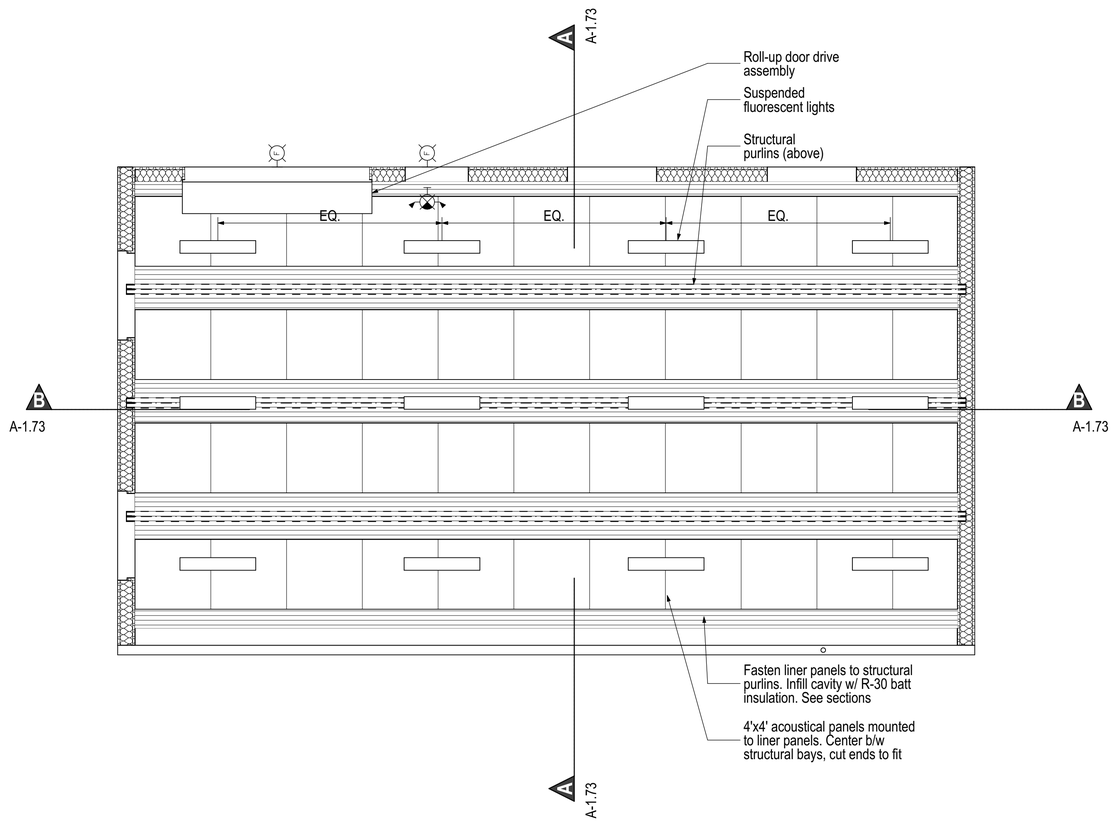

1 First Floor Plan

SCALE: 1/4" = 1'-0"

NORTH

2 First Floor Ceiling Plan

SCALE: 1/4" = 1'-0"

NORTH

GENERAL NOTES:

1. BUILDING SHALL BE FULLY EQUIPPED WITH FIRE SPRINKLERS PER NFPA13 UNLESS OTHERWISE NOTED.

2. ALL ELECTRICAL, PLC, CONTROL, SCADA, OR SERVER ROOMS SHALL NOT BE EQUIPPED WITH FIRE SPRINKLERS PER CITY OF CHANDLER ORDINANCE #4135.

3. ALL EXPOSED BIRD CONTROL DEVICES SHALL BE MOUNTED 5-FEET FROM EDGE OF ROOF.

1620 West Fountainhead Pkwy
Suite 501
Tempe, Arizona 85282
Phone: (480) 893-8860
Improving Arizona's Infrastructure Since 1942

WILSON ENGINEERS

CITY OF CHANDLER
RECLAIMED WATER INTERCONNECT FACILITY

RWIF BLOWER BUILDING FLOOR PLAN & REFLECTED CEILING PLAN

CITY PROJECT NO. WW1901.203
WILSON PROJECT NO. 21007

Design:	Drawn:	Checked:
Date: 02/2022	Wilson	Project No.: 21007

Revision	Date	Description	By

VERIFY SCALES
BAR IS ONE INCH ON ORIGINAL DRAWING
0 1"
IF NOT ONE INCH ON THIS SHEET, ADJUST SCALES ACCORDINGLY

REGISTERED ARCHITECT
CERTIFICATE NO.
22434
ROBERT G. GRAHAM
2/11/22
Date Signed
ARIZONA, U.S.A.

MOTLEY
Design Group, LLC
Architecture - Historic Preservation - Planning - Landscape Design
1114 Grand Avenue - Phoenix AZ 85007 - 602.254.5599 - motleydesigngroup.com

Sheet No. A-1.72

AGENCY REVIEW

XREFS:

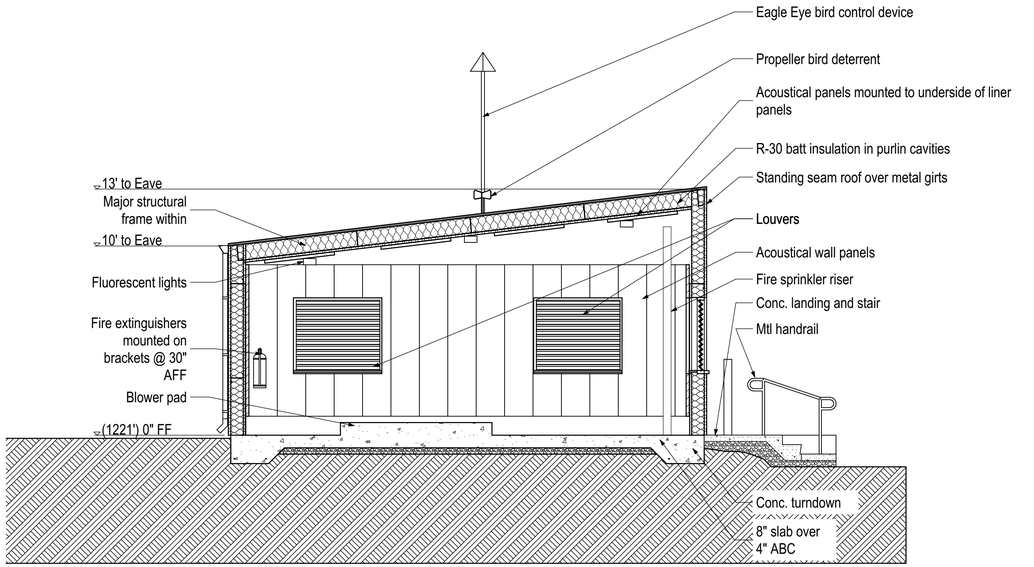

1

Section A-A

SCALE: 1/4" = 1'-0"

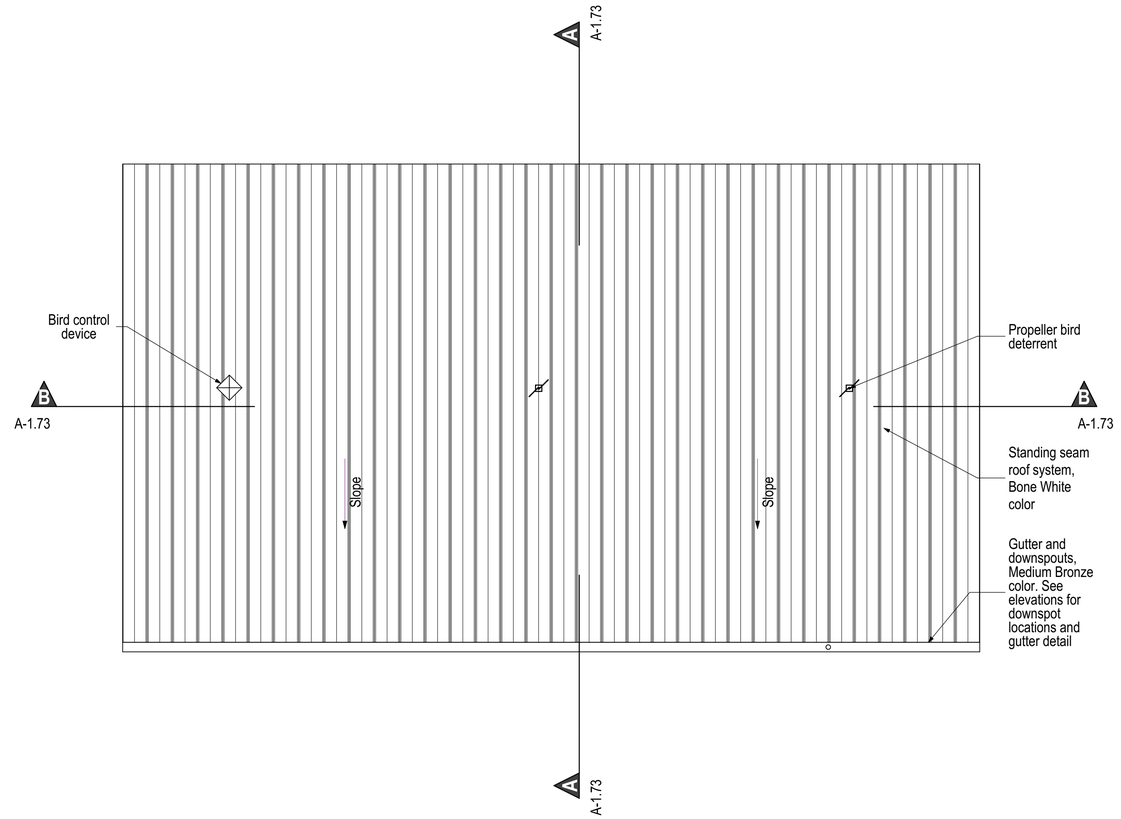

3

Roof Plan

SCALE: 1/4" = 1'-0"

NORTH

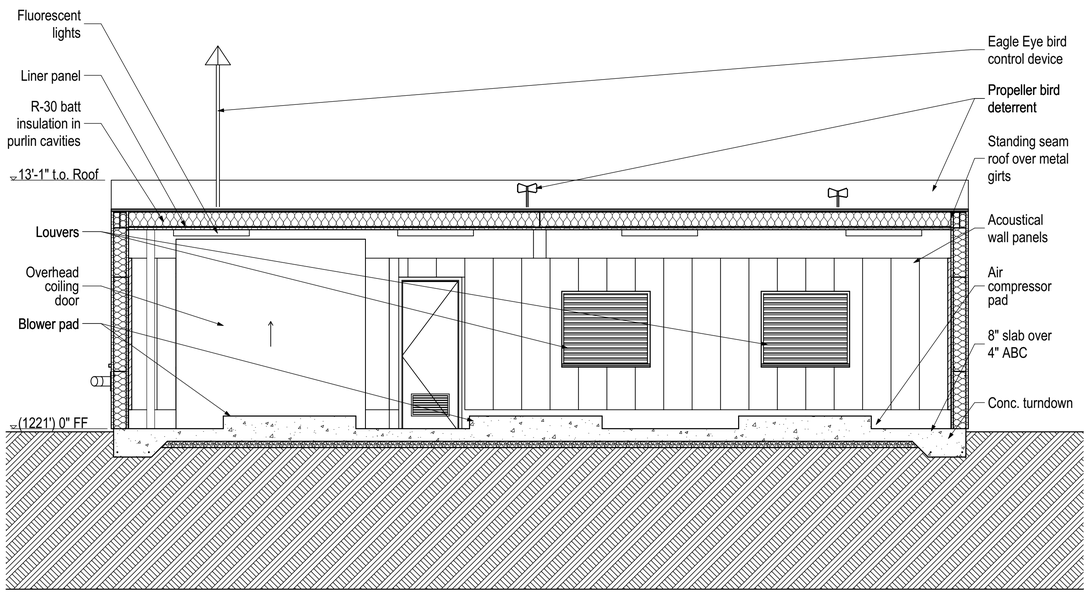

2

Section B-B

SCALE: 1/4" = 1'-0"

WILSON ENGINEERS
1620 West Fountainhead Pkwy
Suite 501
Tempe, Arizona 85282
Phone: (480) 893-8860
Improving Arizona's Infrastructure Since 1942

CITY OF CHANDLER
RECLAIMED WATER INTERCONNECT FACILITY

RWIF BLOWER BUILDING ROOF PLAN AND SECTIONS

CITY PROJECT NO. WW1901.203
WILSON PROJECT NO. 21007

Design:	Drawn:	Checked:
Date: 02/2022	Wilson Project No.: 21007	

Revision	Date	Description	By

VERIFY SCALES
BAR IS ONE INCH ON ORIGINAL DRAWING
0 1"
IF NOT ONE INCH ON THIS SHEET, ADJUST SCALES ACCORDINGLY

REGISTERED ARCHITECT
CERTIFICATE NO.
22434
ROBERT G. GRAHAM
Date Signed 2/11/22
ARIZONA, U.S.A.

MOTLEY
Design Group, LLC
Architecture - Historic Preservation - Planning - Landscape Design
1114 Grand Avenue - Phoenix AZ 85007 - 602.254.5599 - motleydesigngroup.com

Sheet No. A-1.73

AGENCY REVIEW

XREFS:

G:\PROJECT\21007\CADD\DESIGN\BASEFILES\TB-WE-D.DWG, 1/25/2022 5:12:50 PM, jjohnson, 1:1.011556

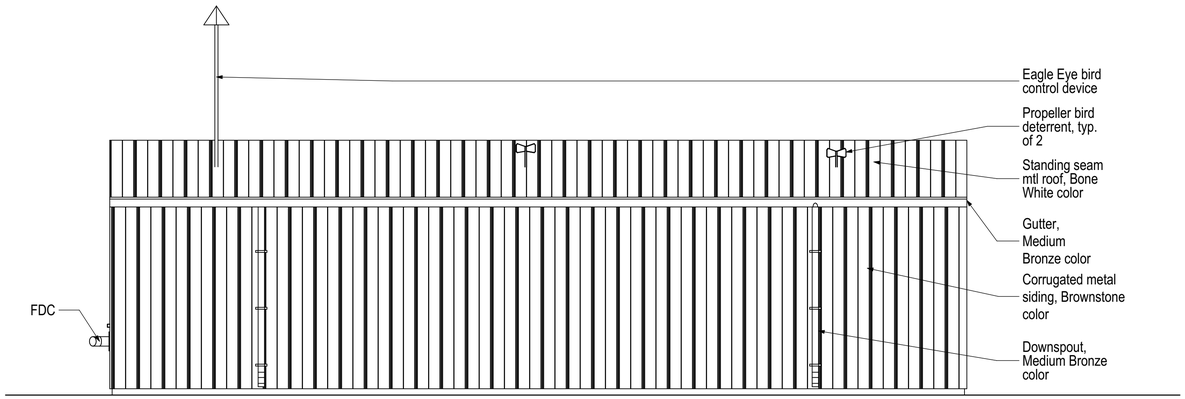

1 South Elevation

SCALE: 1/4" = 1'-0"

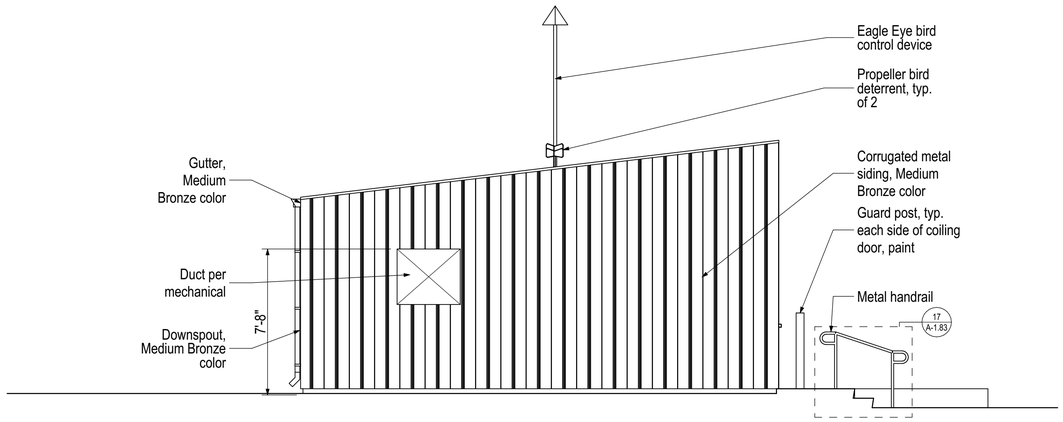

2 East Elevation

SCALE: 1/4" = 1'-0"

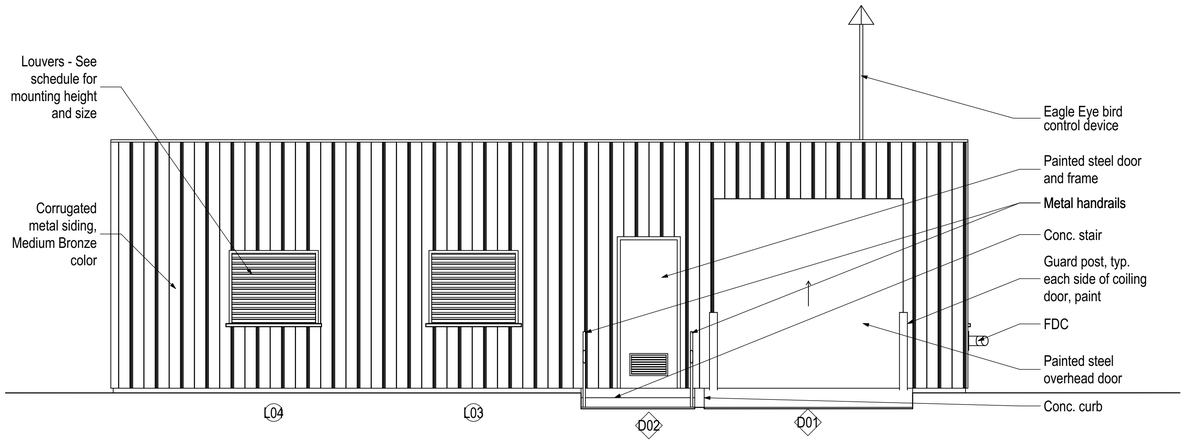

3 North Elevation

SCALE: 1/4" = 1'-0"

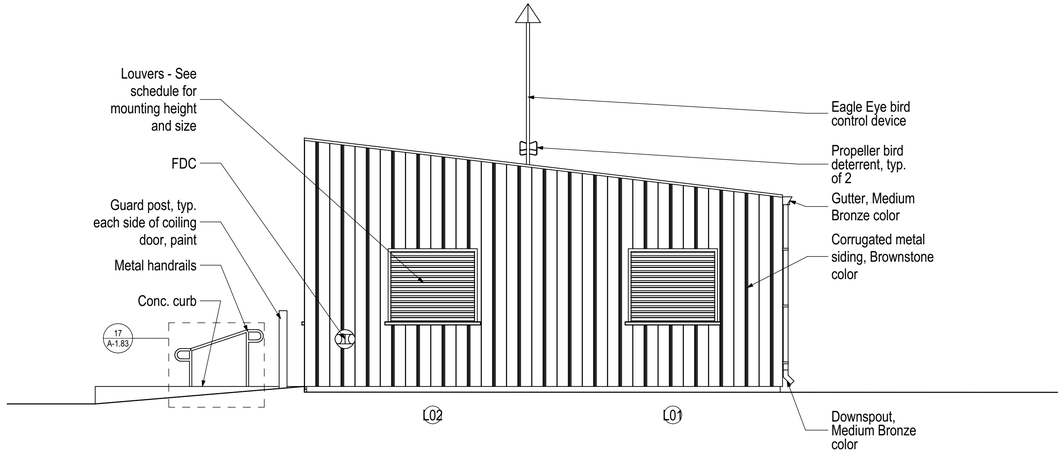

4 West Elevation

SCALE: 1/4" = 1'-0"

1620 West Fountainhead Pkwy
Suite 501
Tempe, Arizona 85282
Phone: (480) 893-8860

Improving Arizona's Infrastructure Since 1942

WILSON ENGINEERS

CITY OF CHANDLER
RECLAIMED WATER INTERCONNECT FACILITY

RWIF BLOWER BUILDING ELEVATIONS

CITY PROJECT NO. WW1901.203
WILSON PROJECT NO. 21007

Design:	Drawn:	Checked:
Date: 02/2022	Wilson Project No.: 21007	

Revision	Date	Description	By

VERIFY SCALES
BAR IS ONE INCH ON ORIGINAL DRAWING
0 1"
IF NOT ONE INCH ON THIS SHEET, ADJUST SCALES ACCORDINGLY

REGISTERED ARCHITECT
CERTIFICATE NO.
22434
ROBERT G. GRAHAM
2/11/22
Date Signed
ARIZONA, U.S.A.

MOTLEY
Design Group, LLC
Architecture - Historic Preservation - Planning - Landscape Design
1114 Grand Avenue - Phoenix AZ 85007 - 602.254.5599 - motleydesigngroup.com

Sheet No. A-1.74

AGENCY REVIEW

XREFS:

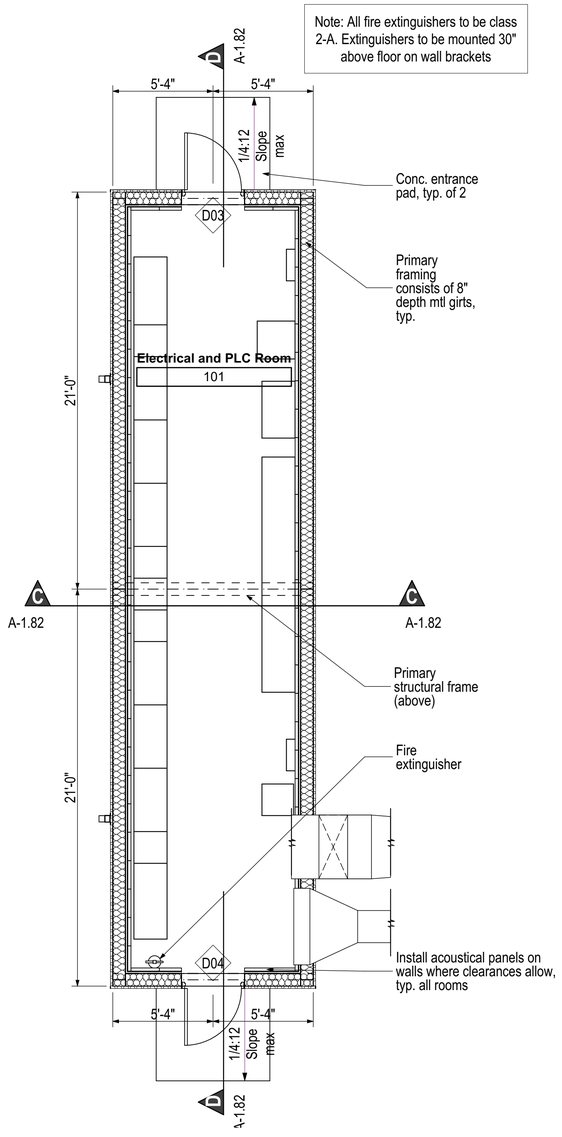

1 First Floor Plan

SCALE: 1/4" = 1'-0"

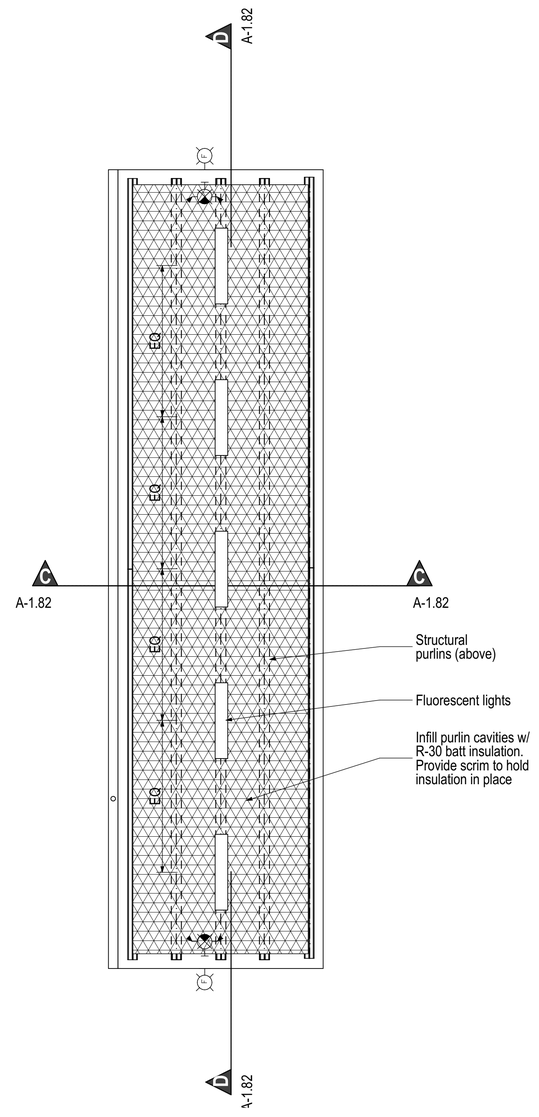

2 First Floor Ceiling Plan

SCALE: 1/4" = 1'-0"

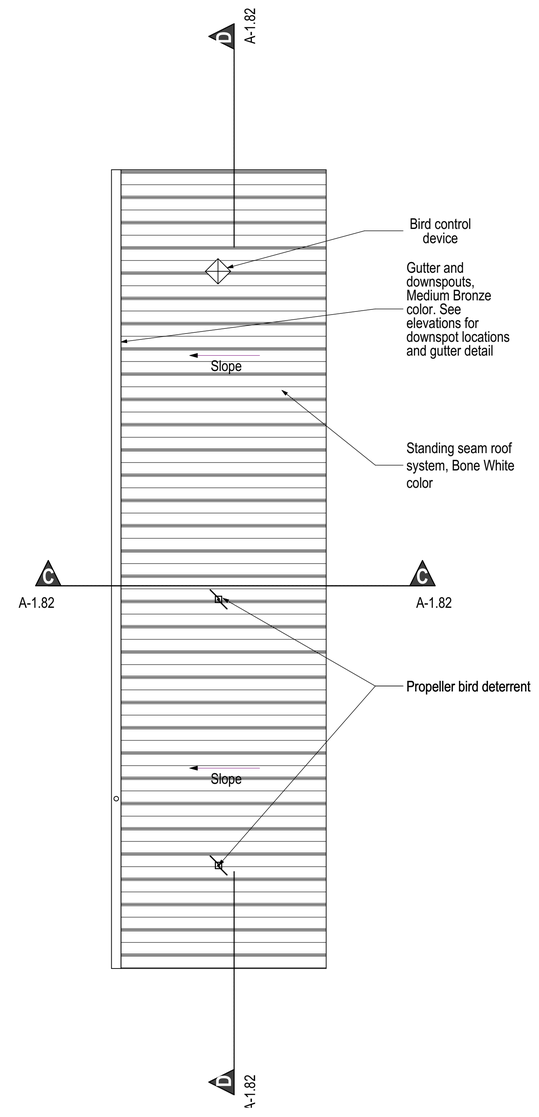

3 Roof Plan

SCALE: 1/4" = 1'-0"

WILSON ENGINEERS
1620 West Fountainhead Pkwy
Suite 501
Tempe, Arizona 85282
Phone: (480) 893-8860
Improving Arizona's Infrastructure Since 1942

CITY OF CHANDLER
RECLAIMED WATER INTERCONNECT FACILITY

RWIF ELECTRICAL BUILDING PLAN VIEWS

CITY PROJECT NO. WW1901.203
WILSON PROJECT NO. 21007

Design:	Drawn:	Checked:
Date: 02/2022	Wilson Project No.: 21007	

Revision	Date	Description	By

VERIFY SCALES
BAR IS ONE INCH ON ORIGINAL DRAWING
0 1"
IF NOT ONE INCH ON THIS SHEET, ADJUST SCALES ACCORDINGLY

REGISTERED ARCHITECT
CERTIFICATE NO.
22434
ROBERT G. GRAHAM
Date Signed
2/11/22
ARIZONA, U.S.A.

MOTLEY
Design Group, LLC
Architecture - Historic Preservation - Planning - Landscape Design
1114 Grand Avenue - Phoenix AZ 85007 - 602.254.5599 - motleydesigngroup.com

Sheet No. A-1.81

AGENCY REVIEW

XREFS:

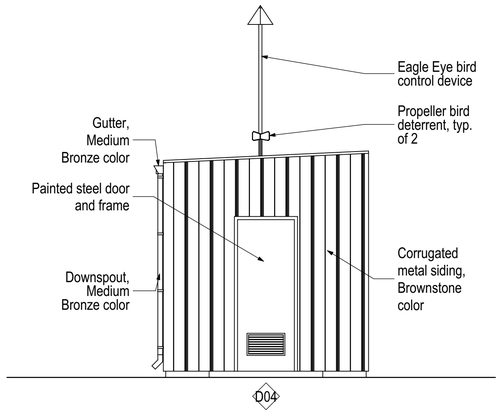

1 South Elevation

SCALE: 1/4" = 1'-0"

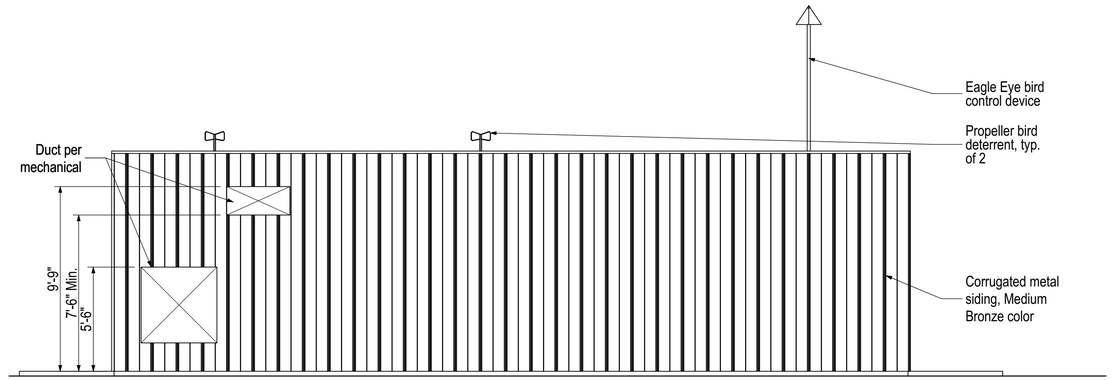

2 East Elevation

SCALE: 1/4" = 1'-0"

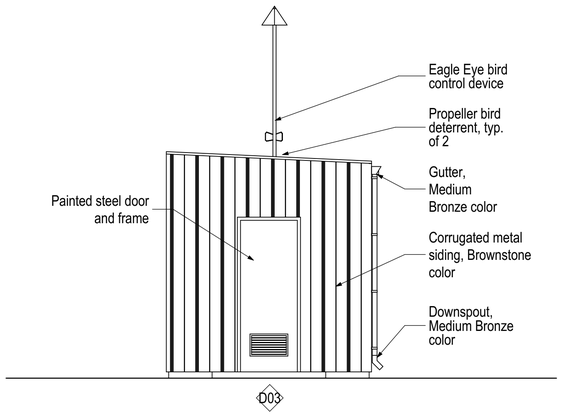

3 North Elevation

SCALE: 1/4" = 1'-0"

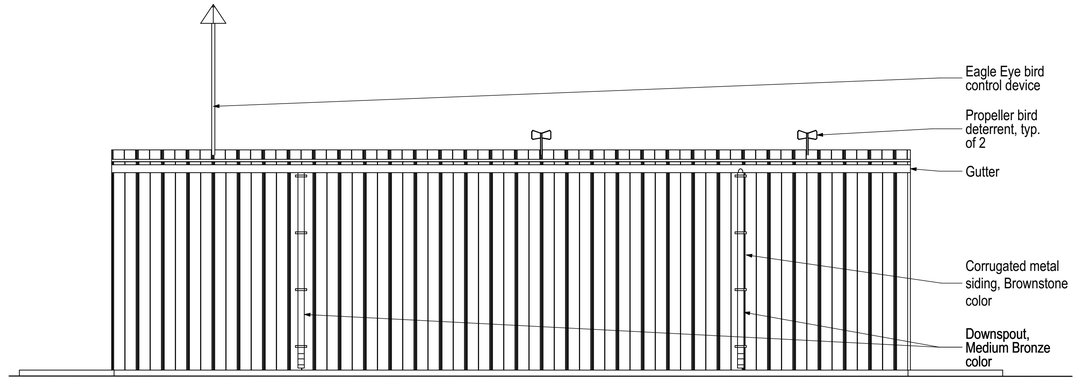

4 West Elevation

SCALE: 1/4" = 1'-0"

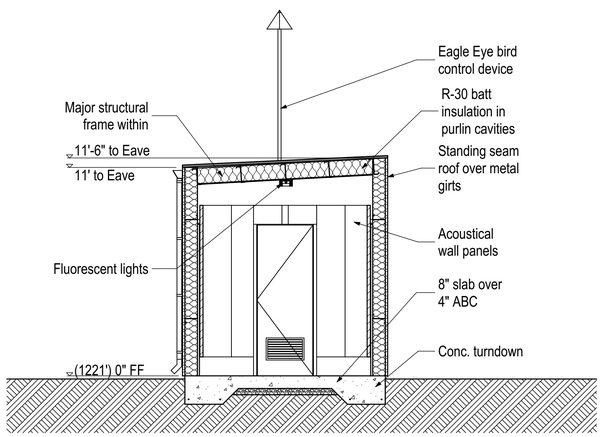

5 Section C-C

SCALE: 1/4" = 1'-0"

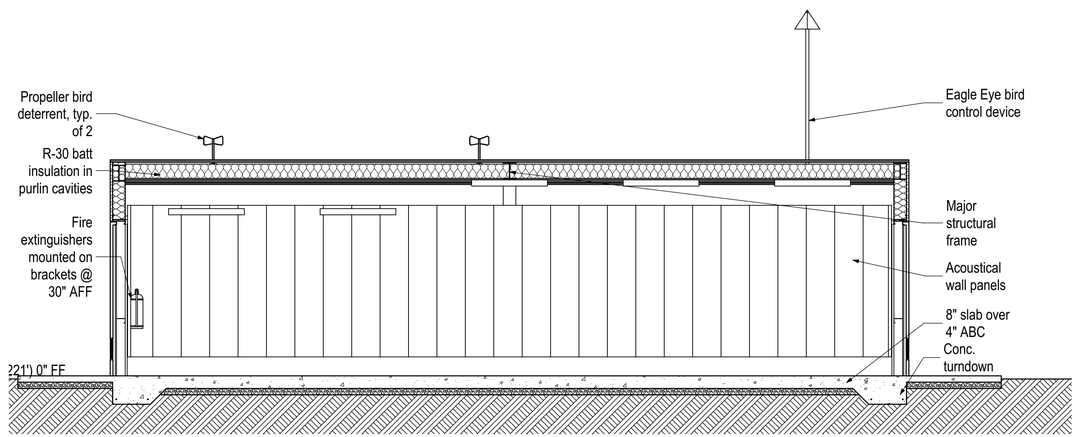

6 Section D-D

SCALE: 1/4" = 1'-0"

1620 West Fountainhead Pkwy
Suite 501
Tempe, Arizona 85282
Phone: (480) 893-8860
Improving Arizona's Infrastructure Since 1942

WILSON ENGINEERS

CITY OF CHANDLER
RECLAIMED WATER INTERCONNECT FACILITY

RWIF ELECTRICAL BUILDING ELEVATIONS & SECTIONS

CITY PROJECT NO. WW1901.203
WILSON PROJECT NO. 21007

Design:	Drawn:	Checked:
Date: 02/2022	Wilson Project No.: 21007	

Revision	Date	Description	By

VERIFY SCALES
BAR IS ONE INCH ON ORIGINAL DRAWING
0 1"
IF NOT ONE INCH ON THIS SHEET, ADJUST SCALES ACCORDINGLY

REGISTERED ARCHITECT
22434
ROBERT G. GRAHAM
2/11/22
Date Signed
ARIZONA, U.S.A.

MOTLEY
Design Group, LLC
Architecture - Historic Preservation - Planning - Landscape Design
1114 Grand Avenue - Phoenix AZ 85007 - 602.254.5599 - motleydesigngroup.com

Sheet No. A-1.82

AGENCY REVIEW

XREFS:

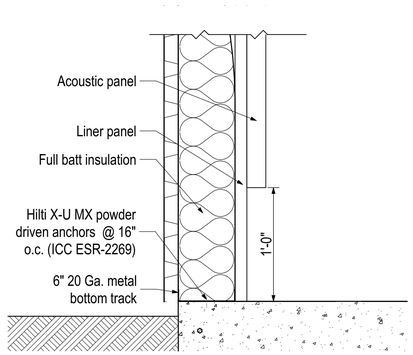

10 Exterior Wall @ FF
SCALE: 1 1/2"= 1'-0"

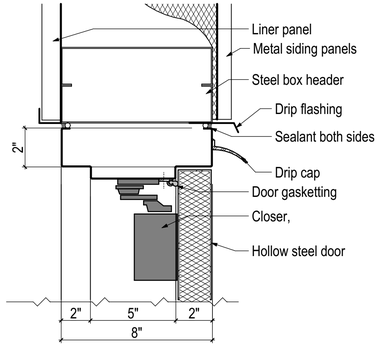

11 HM Door Head
SCALE: 3" = 1'-0"

ROOM		Floor Finish	Base	Wall Finish				Ceiling	Notes
NUMBER	NAME			North	East	West	South		
101	Electrical and PLC Room	Sealer	None	Prefinished liner panel	Prefinished liner panel	Prefinished liner panel	Prefinished liner panel	Prefinished liner panel	
101	Blower Room	Sealer	None	Prefinished liner panel	Prefinished liner panel	Prefinished liner panel	Prefinished liner panel	Prefinished liner panel	

ROOM FINISH SCHEDULE

ID	Type	W x H Size	Thickness	LEAF			FRAME		DETAILS			RATING	HW SET	NOTES
				Material	Finish	Glazing	Material	Finish	HEAD	JAMB	SILL			
D01	B	10'×10'	-3/4"	Steel	Paint	-	---	---	12/A-1.83	---	13/A-1.83	-	Factory	
D02	A	3'×8'	1 3/4"	Steel	Paint	-	Steel	Paint	11/A-1.83	1/A-1.83	2/A-1.83	-	A	
D03	A	3'×8'	1 3/4"	Steel	Paint	-	Steel	Paint	11/A-1.83	1/A-1.83	2/A-1.83	-	A	
D04	A	3'×8'	1 3/4"	Steel	Paint	-	Steel	Paint	11/A-1.83	1/A-1.83	2/A-1.83	-	A	

DOOR SCHEDULE

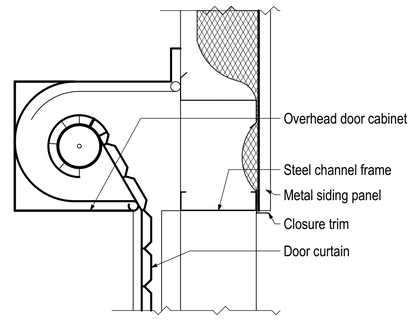

12 O.H. Door Head
SCALE: 1 1/2"= 1'-0"

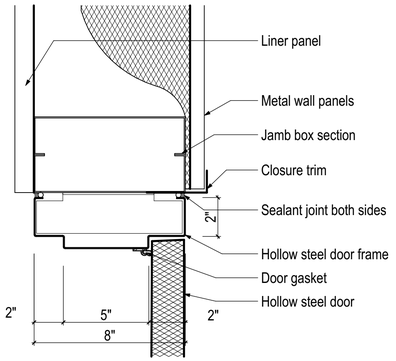

1 HM Door Jamb
SCALE: 3" = 1'-0"

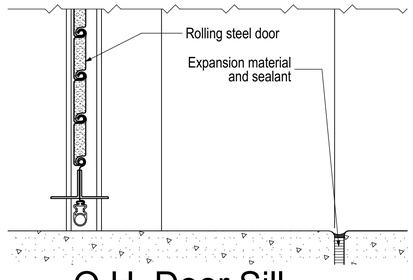

13 O.H. Door Sill
SCALE: 3" = 1'-0"

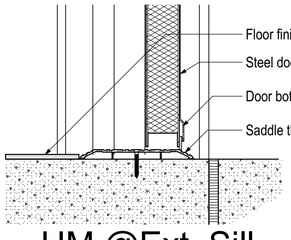

2 HM @Ext. Sill
SCALE: 3" = 1'-0"

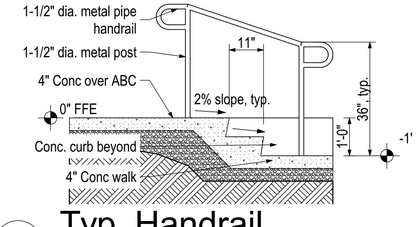

17 Typ. Handrail
SCALE: 1/2" = 1'-0"

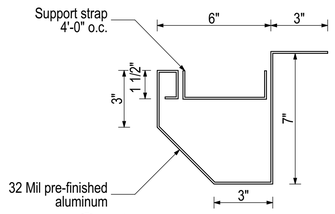

15 Gutter
SCALE: 3" = 1'-0"

No.	Location	SIZE		SILL above FFE	Finish
		Width	Height		
L01	Blower and PLC Room	4'-8"	4'	3'-3"	
L02	Blower and PLC Room	4'-8"	4'	3'-3"	
L03	Blower and PLC Room	4'-8"	4'	3'-3"	
L04	Blower and PLC Room	4'-8"	4'	3'-3"	

LOUVER SCHEDULE

TYPE	A	B
VIEW	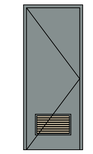	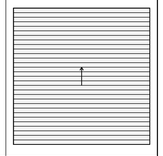
DIMS	3'-0"×8'-0"	10'-0"×10'-0"
NOTES		

DOOR TYPES

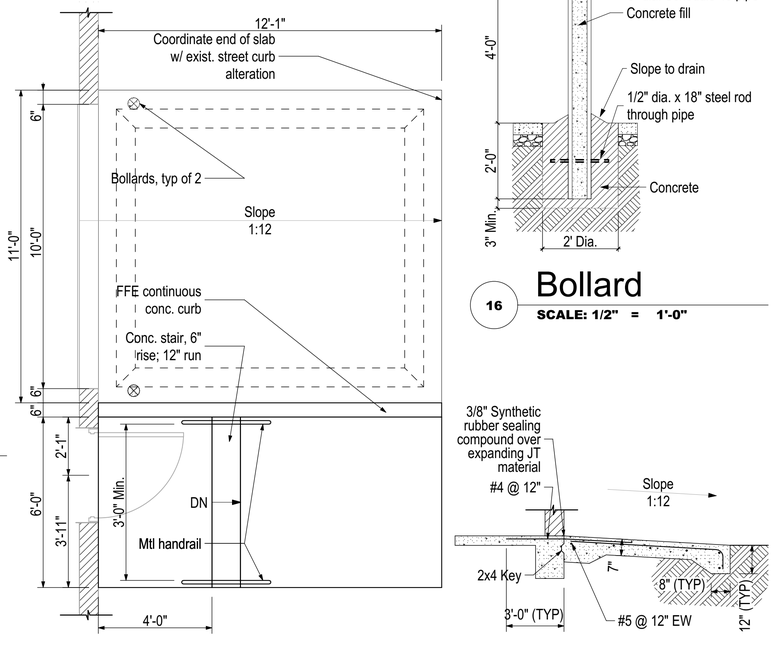

Plan @ Ramp

14 Conc. Pad @ Door
SCALE: 3/8" = 1'-0"

16 Bollard
SCALE: 1/2" = 1'-0"

Section

Description	Manufacturer	Model #	Finish	Comments	A
Elec Panic Hardware (dbl)	Von Duprin	9875-L-E996-06-FSE	626		X
Elec Panic Hardware (sing)	Von Duprin	98-L-E996-06-FSE	626		
Mortise Cylinder	Schlage	80-1115	626		X
SFIC Everest Core	Schlage	80-037- EV29 R	626		X
Rim Cylinder	Schlage	80-116	626		
EU Mortise Lock	Schlage	L9092HDEU 06N	626		
Hinge, Non-Removable Pin	Ives	5BB1 4.5x4.5 NRP	630		X
Electric Hinge	Ives	5BB1 4.5x4.5 TW8	630		X
Surface Closer	LCN	4040XP SCHUSH	689		X
Auto Flush Bolt	Ives	FB31P	630		X
Dust Proof Strike	Ives	DP2	626		X
Coordinator	Ives	COR X FL D MB	628		X
Kick Plate	Ives	8400 10" x 2" LDW B4E	630		
Rain Drip	Pemko	346C	AL		X
Door Seals	Pemko	S88D	DKB		X
Astragal	Pemko	357SP	600		X
Door Sweep	Pemko	315CN	AL		X
Threshold	Pemko	172A MSES10	AL		X
Multitech Reader	SCE	MT15	BLK		X
Rex	By Sec. Contractor				X
Door position Switch	By Sec. Contractor				X
Power	By Sec. Contractor				X

HARDWARE SCHEDULE

WILSON ENGINEERS
1620 West Fountainhead Pkwy
Suite 501
Tempe, Arizona 85282
Phone: (480) 893-8860
Improving Arizona's Infrastructure Since 1942

CITY OF CHANDLER
RECLAIMED WATER INTERCONNECT FACILITY
RWIF BLOWER BUILDING SCHEDULES AND DETAILS
CITY PROJECT NO. WW1901.203
WILSON PROJECT NO. 21007

Design:	Drawn:	Checked:
Date: 02/2022	Wilson Project No.: 21007	

Revision	Date	Description	By

VERIFY SCALES
BAR IS ONE INCH ON ORIGINAL DRAWING
0 1"
IF NOT ONE INCH ON THIS SHEET, ADJUST SCALES ACCORDINGLY

REGISTERED ARCHITECT
CERTIFICATE NO.
22434
ROBERT G. GRAHAM
Date Signed 2/11/22
ARIZONA, U.S.A.

MOTLEY
Design Group, LLC
Architecture - Historic Preservation - Planning - Landscape Design
1114 Grand Avenue - Phoenix AZ 85007 - 602.254.5599 - motleydesigngroup.com

Sheet No. A-1.83

AGENCY REVIEW

XREFS:

EVAPORATIVE COOLER SCHEDULE

(EC)

MARK	MANUF.	MODEL	CFM	ESP	MEDIA DEPTH	HP	ELECTRICAL				PUMP		OPER. WEIGHT LBS.	REMARKS
							FLA	MCA	MOP	VOLTS/PH	GPM @ 5' HEAD	HP		
ECU-100	UNITED METAL PRODUCTS	CEL-ODO-36	17,000	0.50"	12" CELdek	7.5	16.2	20.3	30.0	460v/3Ø	26.0	1/3	5,975 LBS.	(1)

(1) -

GRILLES / REGISTERS / DIFFUSERS / LOUVERS SCHEDULE

MARK	DESCRIPTION	MANUF.	MODEL	FRAME	MODULE	O.B.D.	FINISH (1)	MAX. NC	MATERIAL	REMARKS
(A)	SUPPLY GRILLE	KRUEGER	5880	SURFACE	42" x 30"	YES	WHITE	30	ALUMINUM	ADJUSTABLE BLADE
A	WALL LOUVER	RUSKIN	L375D	SURFACE	56" x 48"	NO	WHITE	30	ALUMINUM	COORDINATE MOUNTING HEIGHT AND LOCATION WITH PRE-FAB BUILDING MANUFACTURER

(1) PROVIDE AIR DEVICES WITH WHITE FINISH FOR ALL CEILING INSTALLATIONS. PROVIDE CLEAR (ALUMINUM) FINISH FOR ALL SURFACE MOUNTED INSTALLATIONS. CONFIRM COLOR WITH THE ARCHITECT PRIOR TO ORDERING DEVICE.

STANDARD MECHANICAL SYMBOLS

SYMBOL	ABBR.	DESCRIPTION
12/8		RECTANGULAR DUCTWORK (FIRST FIGURE - SIDE SHOWN. 2ND FIGURE - SIDE NOT SHOWN.)
10"Ø		ROUND DUCTWORK
	DN	DROP WITH RESPECT TO AIR FLOW
	UP	RISE WITH RESPECT TO AIR FLOW
	SA	SUPPLY AIR
	RA	RETURN AIR
	EA	EXHAUST AIR
	VD	VOLUME DAMPER (MANUAL LOCKING OR MOTOR OPERATED AS INDICATED).
A B		EXPANDED NECK DUCT TAKE-OFF ("A" DIMENSION = "B" DIMENSION x 1.5)
		SPIN-IN OR PRESSURE FIT DUCT TAKE-OFF WITH VOLUME DAMPER
		CURVED RADIUS ELBOW (MIN. CENTERLINE RADIUS TURNING VANES).
(T)	T'STAT	THERMOSTAT
3 / M-1		DETAIL NO. 3 ON SHEET M-1
		FLEXIBLE DUCTWORK
		FLEXIBLE CONNECTION
		EXISTING DUCTWORK TO REMAIN
		EXISTING DUCTWORK TO BE REMOVED
SR	SR	SUPPLY AIR REGISTER
CD	CD	CEILING DIFFUSER
RG	RG	RETURN GRILLE
RR	RR	RETURN REGISTER WITH OBD
	FRG	FILTER RETURN GRILLE
	P.O.C.	POINT OF CONNECTION (NEW TO EXISTING)

DUCT MATERIAL NOTES.

A. ALL FACTORY MADE DUCTS TO BE CLASS "0" OR CLASS "1" PER THE LATEST EDITION OF THE INTERNATIONAL MECHANICAL CODE.

B. DUCTWORK MATERIAL SHALL BE AS REQUIRED BY SMACNA STANDARDS OR AS REQUIRED BY THE LATEST EDITION OF THE INTERNATIONAL MECHANICAL CODE WHICHEVER IS THE MOST STRINGENT.

C. ABOVE THE CEILING DUCTWORK FABRICATED OF SHEET METAL SHALL BE INSTALLED IN ACCORDANCE WITH THE LATEST EDITION OF THE INTERNATIONAL MECHANICAL CODE.

D. INSULATION TO BE IN ACCORDANCE WITH THE LATEST EDITION OF THE INTERNATIONAL MECHANICAL CODE.

MINIMUM GALVANIZED HORIZONTAL DUCT CRITERIA PER SMACNA STANDARDS

DUCT SIZE	GAUGE	SUPPORT	SPACING
RECTANGULAR (W/ G-CLASS REINFORCING)			
12" & UNDER	26 GA.	(2) 1"x18 GA.	STRAPS @ 10 ft.
13" TO 30"	24 GA.	(2) 1"x18 GA.	STRAPS @ 10 ft.
31" TO 42"	22 GA.	(2) 1"x18 GA.	STRAPS @ 10 ft.
43" TO 54"	22 GA.	(2) 1"x18 GA.	STRAPS @ 10 ft.
55" TO 84"	20 GA.	(2) 1"x18 GA.	STRAPS @ 10 ft.
SPIRAL SEAM ROUND DUCT (-4" W.G CLASS)			
9" & UNDER	26 GA.	(2) 1"x26 GA.	STRAPS @ 10 ft.
10" TO 14"	26 GA.	(2) 1"x26 GA	STRAPS @ 10 ft.
15" TO 23"	24 GA.	(2) 1"x24 GA	STRAPS @ 10 ft.
24" TO 37"	22 GA.	(2) 1"x22 GA	STRAPS @ 10 ft.
38" TO 50"	20 GA.	(2) 1"x20 GA	STRAPS @ 10 ft.

EQUIPMENT IDENTIFICATION NOTES:

EACH HVAC SYSTEM IS TO BE IDENTIFIED WITH A PERMANENT LABEL INDICATING THE AREA IT SERVES, IN ACCORDANCE WITH 2018 IMC SECTION 304.11.

AIR BALANCE NOTE:

THE CONTRACTOR SHALL PROVIDE THE CITY OF CHANDLER A FINAL AIR BALANCE REPORT PRIOR TO CALLING FOR A FINAL INSPECTION. ALSO, PROVIDE ALL EQUIPMENT MANUFACTURER'S INSTALLATION INSTRUCTIONS AVAILABLE AT TIME OF INSPECTION PER 2018 IMC SECTIONS 106, 403, 508, AND 513 AND PER 2018 IECC SECTION C408.2.2.

MECHANICAL DRAWING INDEX

DRAWING NUMBER	DRAWING TITLE
H-1.71	MECHANICAL SCHEDULES AND GENERAL NOTES
H-1.72	MECHANICAL HVAC FLOOR PLAN
H-1.73	MECHANICAL DETAILS

KENNELLY & ASSOCIATES ENGINEERING
16435 N. Scottsdale Rd., Suite 290 | Scottsdale, AZ 85254
O: 602.612.4822 | www.KennellyEngineering.com
KAE Job No. 21025 Designed By: RTW

AGENCY REVIEW

1620 West Fountainhead Pkwy
Suite 501
Tempe, Arizona 85282
Phone: (480) 893-8860
Improving Arizona's Infrastructure Since 1942

WILSON ENGINEERS

CITY OF CHANDLER
RECLAIMED WATER INTERCONNECT FACILITY
RWIF – BLOWER BUILDING
MECHANICAL SCHEDULES AND GENERAL NOTES
CITY PROJECT NO. WW1901.203
WILSON PROJECT NO. 21007

Design: RTW	Drawn: RTW	Checked: JWK
Date: 02/2022	Wilson Project No.: 21007	

Revision	Date	Description	By

VERIFY SCALES
BAR IS ONE INCH ON ORIGINAL DRAWING
0 1"
IF NOT ONE INCH ON THIS SHEET, ADJUST SCALES ACCORDINGLY

Registered Professional Engineer (Mechanical) CERTIFICATE NO. 55235 JAMES W. KENNELLY STATE OF ARIZONA U.S.A. 6-30-22

Sheet No. H-1.71

XREFS: 21025 - TB - RWIF Blower Building, JWK Engineers Seal and Signature - AZ

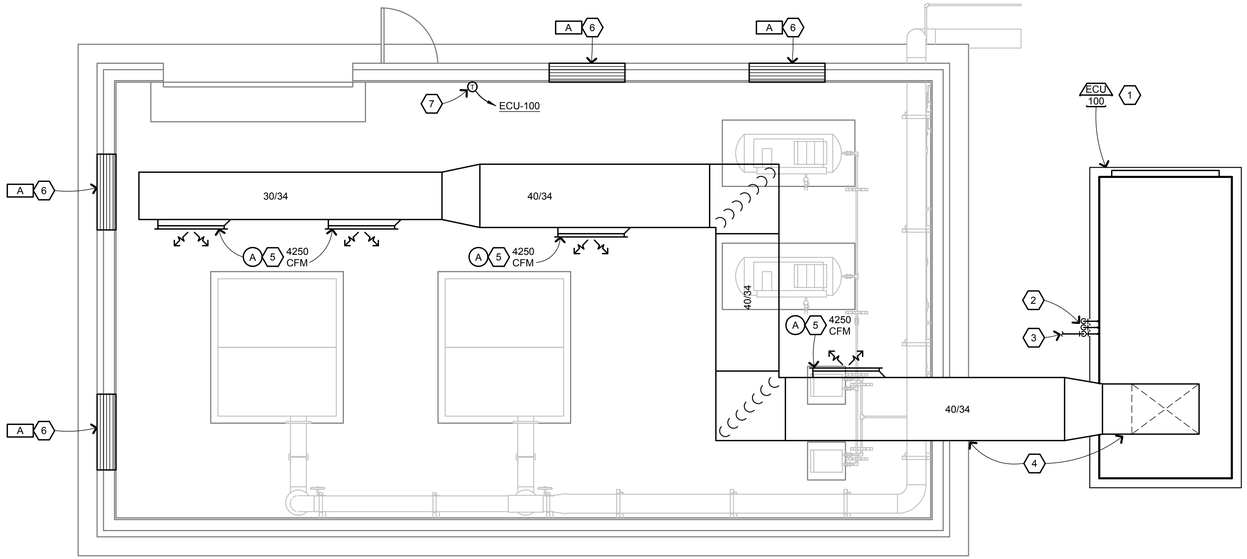

1 MECHANICAL HVAC FLOOR PLAN

SCALE: 1/4"=1'-0"

2 1 0 4' 8' FEET

NORTH

KEYED NOTES

1. FURNISH AND INSTALL NEW EVAPORATIVE COOLER AS SCHEDULED ON SHEET H-1.71. MOUNT AND INSTALL NEW EVAPORATIVE COOLER ONTO NEW 6" HIGH (MIN.) CONCRETE HOUSEKEEPING PAD. REFER TO DETAIL 1/H-1.73 FOR MORE INFORMATION.
2. EXTEND FULL-SIZE DRAIN AND OVERFLOW DRAIN PIPING FROM THE NEW EVAPORATIVE COOLER AND DISCHARGE OVER FINISH GRADE WITH A MINIMUM OF 6" A.F.G. AND TERMINATE WITH ELBOW FACING DOWN. REFER TO DETAIL 1/H-1.73 (TYPICAL).
3. EXTEND NEW 3/4" MAKE-UP WATER PIPING OVER AND MAKE CONNECTION INTO NEW EVAPORATIVE COOLER PER MANUFACTURER'S WRITTEN RECOMMENDATIONS (TYPICAL). REFER TO DETAIL 1/H-1.73.
4. EXTEND NEW SUPPLY AIR DUCTWORK UP AND OVER FROM NEW EVAPORATIVE COOLER, THROUGH EXTERIOR WALL AND TERMINATE AT INTERIOR WALL SUPPLY GRILLE. REFER TO DETAILS 1/H-1.73 AND 3/H-1.73. CONFIRM MOUNTING HEIGHT WITH ARCHITECT (TYPICAL).
5. FURNISH AND INSTALL NEW SUPPLY AIR GRILLE AS SCHEDULED ON SHEET H-1.71. BALANCE TO CFM AS INDICATED (TYPICAL).
6. FURNISH AND INSTALL NEW MAKE-UP AIR LOUVER AS SCHEDULED ON SHEET H-1.71. MOUNT BOTTOM OF NEW LOUVER AT 2'-9" A.F.F. (TYPICAL), COORDINATE EXACT MOUNTING HEIGHT AND LOCATION WITH ARCHITECT. INSTALL PER MANUFACTURER'S WRITTEN RECOMMENDATIONS.
7. FURNISH AND INSTALL NEW FACTORY WALL MOUNTED PROGRAMMABLE THERMOSTAT. MOUNT AT 48" A.F.F. (TYPICAL). CONFIRM EXACT MOUNTING LOCATION WITH ARCHITECT. MAKE CONNECTION TO NEW EVAPORATIVE COOLER PER MANUFACTURER'S WRITTEN RECOMMENDATIONS.

EQUIPMENT IDENTIFICATION NOTES:

EACH HVAC SYSTEM IS TO BE IDENTIFIED WITH A PERMANENT LABEL INDICATING THE AREA IT SERVES, IN ACCORDANCE WITH 2018 IMC SECTION 304.11.

AIR BALANCE NOTE:

THE CONTRACTOR SHALL PROVIDE THE CITY OF CHANDLER A FINAL AIR BALANCE REPORT PRIOR TO CALLING FOR A FINAL INSPECTION. ALSO, PROVIDE ALL EQUIPMENT MANUFACTURER'S INSTALLATION INSTRUCTIONS AVAILABLE AT TIME OF INSPECTION PER 2018 IMC SECTIONS 106, 403, 508, AND 513 AND PER 2018 IECC SECTION C408.2.2.

1620 West Fountainhead Pkwy
Suite 501
Tempe, Arizona 85282
Phone: (480) 883-8860
Improving Arizona's Infrastructure Since 1942

WILSON ENGINEERS

CITY OF CHANDLER
RECLAIMED WATER INTERCONNECT FACILITY

RWIF – BLOWER BUILDING
MECHANICAL HVAC FLOOR PLAN

CITY PROJECT NO. WW1901.203
WILSON PROJECT NO. 21007

Design: RTW	Drawn: RTW	Checked: JWK
Date: 02/2022	Wilson Project No.: 21007	

Revision	Date	Description	By

VERIFY SCALES
BAR IS ONE INCH ON ORIGINAL DRAWING
0 1"
IF NOT ONE INCH ON THIS SHEET, ADJUST SCALES ACCORDINGLY

Registered Professional Engineer (Retired) CERTIFICATE NO. 55235 JAMES W. KENNELLY 02-14-22 STATE OF ARIZONA U.S.A.

KENNELLY & ASSOCIATES ENGINEERING
16435 N. Scottsdale Rd., Suite 290 | Scottsdale, AZ 85254
O: 602.612.4822 | www.KennellyEngineering.com
KAE Job No. 21025 Designed By: RTW

Sheet No. H-1.72

AGENCY REVIEW

XREFS: 21025 – TB – RWIF Blower Building; 21025 – A1 – Blower Building Floor Plan; JWK Engineers Seal and Signature – AZ

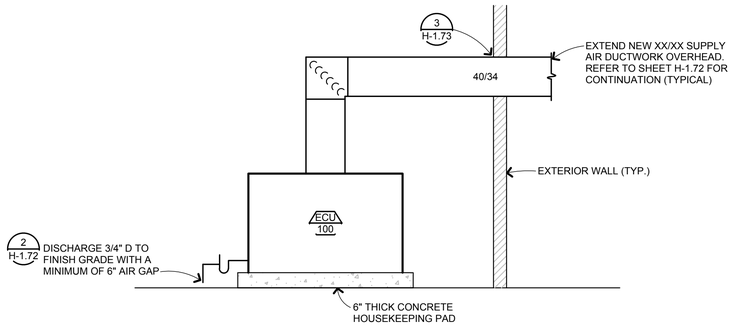

EVAPORATIVE COOLER DETAIL

N.T.S.

1 H-1.73

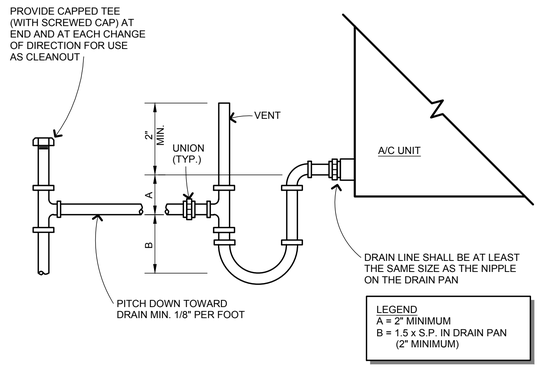

CONDENSATE DRAIN DETAIL

N.T.S.

2 H-1.73

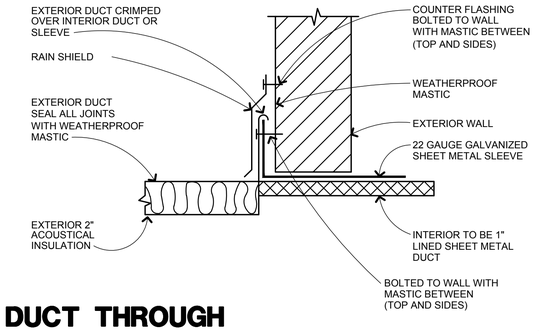

DUCT THROUGH EXTERIOR WALL DETAIL

N.T.S.

3 H-1.73

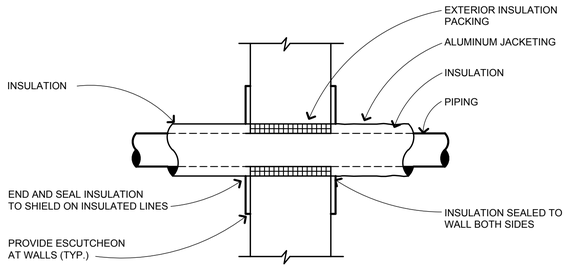

PIPE THROUGH WALL DETAIL

N.T.S.

4 H-1.73

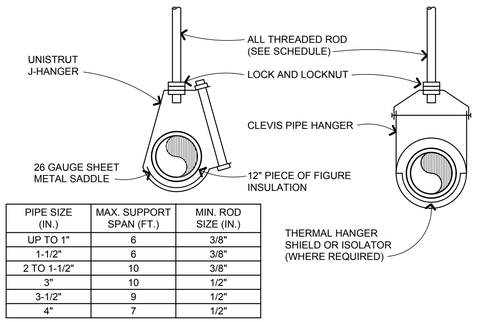

PIPE SIZE (IN.)	MAX. SUPPORT SPAN (FT.)	MIN. ROD SIZE (IN.)
UP TO 1"	6	3/8"
1-1/2"	6	3/8"
2 TO 1-1/2"	10	3/8"
3"	10	1/2"
3-1/2"	9	1/2"
4"	7	1/2"

PIPE HANGER DETAIL

N.T.S.

5 H-1.73

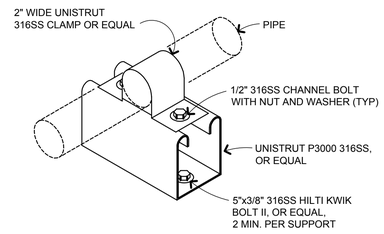

PIPE SUPPORT DETAIL

N.T.S.

6 H-1.73

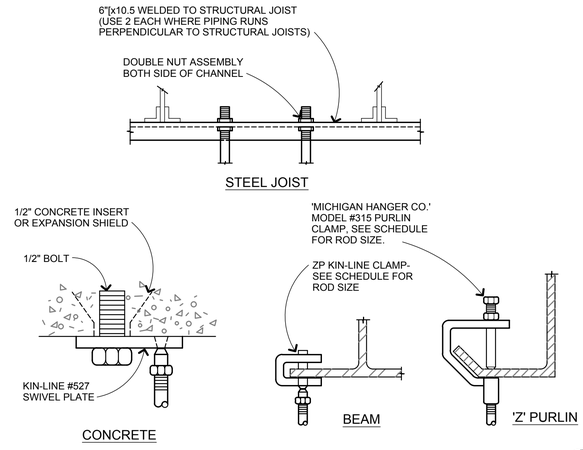

HANGER ATTACHMENT DETAILS

N.T.S.

7 H-1.73

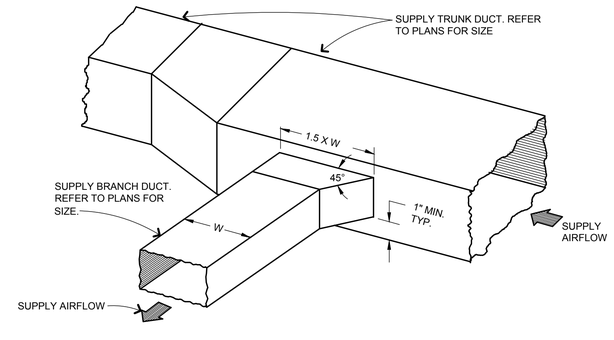

BRANCH DUCT TAKE-OFF DETAIL

N.T.S.

8 H-1.73

1620 West Fountainhead Pkwy
Suite 501
Tempe, Arizona 85282
Phone: (480) 883-8860
Improving Arizona's Infrastructure Since 1942

WILSON ENGINEERS

CITY OF CHANDLER
RECLAIMED WATER INTERCONNECT FACILITY

RWIF – BLOWER BUILDING
MECHANICAL DETAILS

CITY PROJECT NO. WW1901.203
WILSON PROJECT NO. 21007

By	Description	Date	Revision

Design: RTW
Drawn: RTW
Checked: JWK
Date: 02/2022
Wilson Project No.: 21007

VERIFY SCALES
BAR IS ONE INCH ON ORIGINAL DRAWING
0 1"
IF NOT ONE INCH ON THIS SHEET, ADJUST SCALES ACCORDINGLY

Registered Professional Engineer (General)
CERTIFICATE NO.
55235
JAMES W. KENNELLY
STATE OF ARIZONA
12-14-22

KENNELLY & ASSOCIATES ENGINEERING
16435 N. Scottsdale Rd., Suite 290 | Scottsdale, AZ 85254
O: 602.612.4822 | www.KennellyEngineering.com
KAE Job No. 21025 Designed By: RTW

Sheet No. H-1.73

AGENCY REVIEW

XREFS: 21025 – TB – RWIF Blower Building; JWK Engineers Seal and Signature – AZ

H:\2021\21025 – CHANDLER AIRPORT PORTABLE BUILDINGS\MECH\RWIF BLOWER BUILDING\21025 – H-1.73 – MECHANICAL DETAILS.DWG, 2/14/2022 11:31:11 AM, Rayford Winn, 1:2.18867919

PACKAGE AIR CONDITIONING UNIT SCHEDULE

MARK	MANUF.	MODEL	SUPPLY FAN SECTION						COOLING COIL SECTION							RET. / OSA / EXH. AIR SECTION					CONDENSING SECTION						UNIT ELECTRICAL				OPER. WEIGHT LBS.	IEER / COP PER 2018 IECC				REMARKS
																					COMPRESSOR			CONDENSER FAN MOTOR									COOLING (IEER)		HEATING (COP)		
			CFM	ESP	HP	QTY.	FAN RPM	FLA	SENS BTUH	TOTAL BTUH	E.A.T. F° (DB)	E.A.T. F° (WB)	L.A.T. F° (DB)	L.A.T. F° (WB)	AMB. AIR (F°)	CFM	ESP	HP	QTY.	FLA	TYPE	QTY.	AMPS	QTY.	FLA	EFFICIENCY	VOLT/PH	MCA	MOP	SCCR		MIN.	ACTUAL	MIN.	ACTUAL	
ACU-100	DAIKIN	MPS015B	6,000	0.5"	5.0	2	655	6.6	129.6	165.3	80.0	67.0	59.4	58.3	110.0	5,200	0.3"	0.75	2	2.2	SCROLL	4	2 @ 12.2	4	0.7	11.1 EER / 12.4 IEER	460v/3Ø	40.0	50.0	5 kAIC	2,000 LBS.	12.2	12.4	(2)	(2)	(1)

(1) PROVIDE UNIT WITH OPTIONS LISTED:
1. MAVERICK ROOFTOP COMM MOD, BACNET IP-MS/TP
2. 7 DAY PROGRAMMABLE THERMOSTAT WITH TOUCH SCREEN
3. POWER EXHAUST, 15-25 TON, 410A, 350 VOLT
4. FIELD-INSTALLED IONIZATION SMOKE DETECTOR
5. ECONOMIZER, HORIZONTAL, DDC CONTROL, 15-25 TON
6. SIDE SUPPLY / RETURN DISCHARGE.

(2) UNIT IS COOLING ONLY, NO HEATING DATA REQUIRED.

GRILLES / REGISTERS / DIFFUSERS / LOUVERS SCHEDULE

MARK	DESCRIPTION	MANUF.	MODEL	FRAME	MODULE	O.B.D.	FINISH (1)	MAX. NC	MATERIAL	REMARKS
(A)	SUPPLY GRILLE	KRUEGER	SH SERIES	SURFACE	18" x 18"	YES	WHITE	30	STEEL	4-WAY THROW
(B)	SUPPLY GRILLE	KRUEGER	5880	SURFACE	36" x 14"	YES	WHITE	30	STEEL	ADJUSTABLE BLADE
[A]	RETURN GRILLE	KRUEGER	S85	SURFACE	48" x 48"	NO	WHITE	30	STEEL	35° DEFLECTION, 1/2" BLADE SPACING

(1) PROVIDE AIR DEVICES WITH WHITE FINISH FOR ALL CEILING INSTALLATIONS. PROVIDE CLEAR (ALUMINUM) FINISH FOR ALL SURFACE MOUNTED INSTALLATIONS. CONFIRM COLOR WITH THE ARCHITECT PRIOR TO ORDERING DEVICE.

COMcheck Software Version 4.1.1.0

Mechanical Compliance Certificate

Project Information

Energy Code: 2018 IECC
Project Title: RWIF - Electrical Building
Location: Chandler, Arizona
Climate Zone: 2b
Project Type: New Construction

Construction Site: Chandler, AZ

Owner/Agent:

Designer/Contractor:
Rayford Winn
Kennelly & Associates Engineering
16435 North Scottsdale Road
Suite 290
Scottsdale, AZ 85254
602-612-4822
rayford@kennellyengineering.com

Additional Efficiency Package(s)

High efficiency HVAC. Systems that do not meet the performance requirement will be identified in the mechanical requirements checklist report.

Mechanical Systems List

Quantity **System Type & Description**

1 HVAC System 1 (Single Zone):
Cooling: 1 each - Single Package DX Unit, Capacity = 165 kBtu/h, Air-Cooled Condenser, Air Economizer
Proposed Efficiency = 12.40 EER, Required Efficiency: 12.10 EER + 13.6 IEER
Fan System: FAN SYSTEM 3 | Electrical Room -- Compliance (Motor nameplate HP method) : Passes

Fans:
FAN 3 Supply, Constant Volume, 6000 CFM, 5.0 motor nameplate hp, 95.0 fan efficiency grade

Mechanical Compliance Statement

Compliance Statement: The proposed mechanical design represented in this document is consistent with the building plans, specifications, and other calculations submitted with this permit application. The proposed mechanical systems have been designed to meet the 2018 IECC requirements in COM*check* Version 4.1.1.0 and to comply with any applicable mandatory requirements listed in the Inspection Checklist.

Rayford T. Winn - Associate (Name - Title) | Rayford T. Winn (Signature) | 06-17-2021 (Date)

Project Title: RWIF - Electrical Building — Report date: 06/17/21
Data filename: H:\2021\21025 - Chandler Airport Portable Buildings\Mech\Calculations\RWIF - Electrical Building.cck — Page 1 of 11

STANDARD MECHANICAL SYMBOLS

SYMBOL	ABBR.	DESCRIPTION
12/8		RECTANGULAR DUCTWORK (FIRST FIGURE - SIDE SHOWN. 2ND FIGURE - SIDE NOT SHOWN.)
10"Ø		ROUND DUCTWORK
	DN	DROP WITH RESPECT TO AIR FLOW
	UP	RISE WITH RESPECT TO AIR FLOW
	SA	SUPPLY AIR
	RA	RETURN AIR
	EA	EXHAUST AIR
	VD	VOLUME DAMPER (MANUAL LOCKING OR MOTOR OPERATED AS INDICATED).
A B		EXPANDED NECK DUCT TAKE-OFF ("A" DIMENSION = "B" DIMENSION x 1.5)
		SPIN-IN OR PRESSURE FIT DUCT TAKE-OFF WITH VOLUME DAMPER
		CURVED RADIUS ELBOW (MIN. CENTERLINE RADIUS TURNING VANES).
T	T'STAT	THERMOSTAT
3 / M-1		DETAIL NO. 3 ON SHEET M-1
		FLEXIBLE DUCTWORK
		FLEXIBLE CONNECTION
		EXISTING DUCTWORK TO REMAIN
		EXISTING DUCTWORK TO BE REMOVED
SR	SR	SUPPLY AIR REGISTER
CD	CD	CEILING DIFFUSER
RG	RG	RETURN GRILLE
RR	RR	RETURN REGISTER WITH OBD
	FRG	FILTER RETURN GRILLE
	P.O.C.	POINT OF CONNECTION (NEW TO EXISTING)

DUCT MATERIAL NOTES.

A. ALL FACTORY MADE DUCTS TO BE CLASS "0" OR CLASS "1" PER THE LATEST EDITION OF THE INTERNATIONAL MECHANICAL CODE.

B. DUCTWORK MATERIAL SHALL BE AS REQUIRED BY SMACNA STANDARDS OR AS REQUIRED BY THE LATEST EDITION OF THE INTERNATIONAL MECHANICAL CODE WHICHEVER IS THE MOST STRINGENT.

C. ABOVE THE CEILING DUCTWORK FABRICATED OF SHEET METAL SHALL BE INSTALLED IN ACCORDANCE WITH THE LATEST EDITION OF THE INTERNATIONAL MECHANICAL CODE.

D. INSULATION TO BE IN ACCORDANCE WITH THE LATEST EDITION OF THE INTERNATIONAL MECHANICAL CODE.

MINIMUM GALVANIZED HORIZONTAL DUCT CRITERIA PER SMACNA STANDARDS

DUCT SIZE	GAUGE	SUPPORT	SPACING
RECTANGULAR (W/ G-CLASS REINFORCING)			
12" & UNDER	26 GA.	(2) 1"x18 GA.	STRAPS @ 10 ft.
13" TO 30"	24 GA.	(2) 1"x18 GA.	STRAPS @ 10 ft.
31" TO 42"	22 GA.	(2) 1"x18 GA.	STRAPS @ 10 ft.
43" TO 54"	22 GA.	(2) 1"x18 GA.	STRAPS @ 10 ft.
55" TO 84"	20 GA.	(2) 1"x18 GA.	STRAPS @ 10 ft.
SPIRAL SEAM ROUND DUCT (-4" W.G CLASS)			
9" & UNDER	26 GA.	(2) 1"x26 GA.	STRAPS @ 10 ft.
10" TO 14"	26 GA.	(2) 1"x26 GA	STRAPS @ 10 ft.
15" TO 23"	24 GA.	(2) 1"x24 GA	STRAPS @ 10 ft.
24" TO 37"	22 GA.	(2) 1"x22 GA	STRAPS @ 10 ft.
38" TO 50"	20 GA.	(2) 1"x20 GA	STRAPS @ 10 ft.

EQUIPMENT IDENTIFICATION NOTES:

EACH HVAC SYSTEM IS TO BE IDENTIFIED WITH A PERMANENT LABEL INDICATING THE AREA IT SERVES, IN ACCORDANCE WITH 2018 IMC SECTION 304.11.

AIR BALANCE NOTE:

THE CONTRACTOR SHALL PROVIDE THE CITY OF CHANDLER A FINAL AIR BALANCE REPORT PRIOR TO CALLING FOR A FINAL INSPECTION. ALSO, PROVIDE ALL EQUIPMENT MANUFACTURER'S INSTALLATION INSTRUCTIONS AVAILABLE AT TIME OF INSPECTION PER 2018 IMC SECTIONS 106, 403, 508, AND 513 AND PER 2018 IECC SECTION C408.2.2.

MECHANICAL DRAWING INDEX

DRAWING NUMBER	DRAWING TITLE
H-1.81	MECHANICAL SCHEDULES AND GENERAL NOTES
H-1.82	MECHANICAL HVAC FLOOR PLAN
H-1.83	MECHANICAL DETAILS

KENNELLY & ASSOCIATES ENGINEERING
16435 N. Scottsdale Rd., Suite 290 | Scottsdale, AZ 85254
O: 602.612.4822 | www.KennellyEngineering.com
KAE Job No. 21025 Designed By: RTW

AGENCY REVIEW

1620 West Fountainhead Pkwy
Suite 501
Tempe, Arizona 85282
Phone: (480) 893-8860
Improving Arizona's Infrastructure Since 1942

WILSON ENGINEERS

CITY OF CHANDLER
RECLAIMED WATER INTERCONNECT FACILITY
RWIF – ELECTRICAL BUILDING
MECHANICAL SCHEDULES AND GENERAL NOTES
CITY PROJECT NO. WW1901.203
WILSON PROJECT NO. 21007

Design: RTW | Drawn: RTW | Checked: JWK
Date: 02/2022 | Wilson Project No.: 19038

Revision	Date	Description	By

VERIFY SCALES
BAR IS ONE INCH ON ORIGINAL DRAWING
0 — 1"
IF NOT ONE INCH ON THIS SHEET, ADJUST SCALES ACCORDINGLY

Registered Professional Engineer (Retired) — CERTIFICATE NO. 55235 — JAMES W. KENNELLY — STATE OF ARIZONA — U.S.A. — 12-31-22

Sheet No. H-1.81

XREFS: 21025 - TB - RWIF Blower Building; JWK Engineers Seal and Signature - AZ

H:\2021\21025 – CHANDLER AIRPORT PORTABLE BUILDINGS\MECH\RWIF ELECTRICAL BUILDING\21025 – H-1.81 – MECHANICAL SCHEDULES AND GENERAL NOTES.DWG, 2/14/2022 11:37:02 AM, Rayford Winn, 1:2.18867919

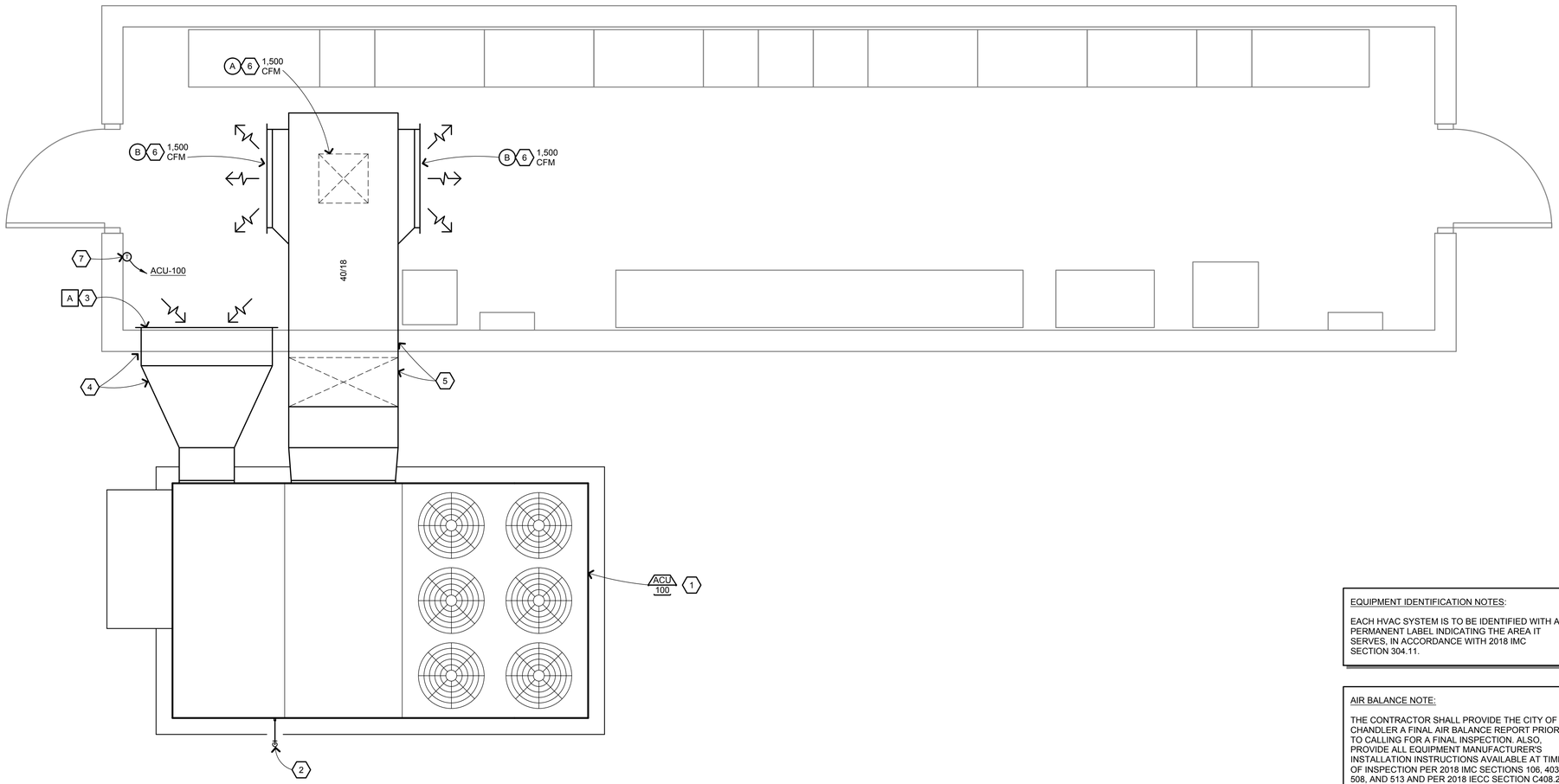

KEYED NOTES

1. FURNISH AND INSTALL NEW PACKAGE A/C UNIT AS SCHEDULED ON SHEET H-3.81. MOUNT AND INSTALL NEW PACKAGE A/C UNIT ONTO NEW 6" HIGH (MIN.) CONCRETE HOUSEKEEPING PAD. REFER TO DETAIL 1/H-1.83 FOR MORE INFORMATION.
2. EXTEND FULL-SIZE CONDENSATE DRAIN PIPING FROM THE NEW PACKAGE A/C UNIT AND DISCHARGE OVER FINISH GRADE WITH A MINIMUM OF 6" A.F.G. AND TERMINATE WITH ELBOW FACING DOWN. REFER TO DETAIL 1/H-1.83 (TYPICAL).
3. FURNISH AND INSTALL NEW RETURN AIR GRILLE AS SCHEDULED ON SHEET H-1.81.
4. EXTEND NEW RETURN AIR DUCTWORK FROM NEW UNIT OVER AND THROUGH EXTERIOR WALL. TERMINATE RETURN DUCTWORK WITH WALL GRILLE. REFER TO DETAILS 1/H-1.83 AND 6/H-1.83.
5. EXTEND NEW SUPPLY AIR DUCTWORK FROM NEW UNIT, UP EXTERIOR WALL AND THROUGH EXTERIOR AND ROUTE HIGH WITHIN THE UPPER CEILING SPACE. COORDINATE ROUTING HEIGHT WITH THE ARCHITECT. SUPPORT NEW DUCTWORK ON EXTERIOR WALL FROM "UNISTRUT" STYLE DUCT SUPPORTS (TYPICAL). REFER TO DETAILS 1/H-1.83 AND 6/H-1.83.
6. FURNISH AND INSTALL NEW SUPPLY AIR GRILLE AS SCHEDULED ON SHEET H-3.81. BALANCE TO CFM AS INDICATED (TYPICAL).
7. FURNISH AND INSTALL NEW FACTORY WALL MOUNTED PROGRAMMABLE THERMOSTAT. MOUNT AT 48" A.F.F. (TYPICAL). CONFIRM EXACT MOUNTING LOCATION WITH ARCHITECT. MAKE CONNECTION TO NEW PACKAGED A/C UNIT PER MANUFACTURER'S WRITTEN RECOMMENDATIONS.

EQUIPMENT IDENTIFICATION NOTES:

EACH HVAC SYSTEM IS TO BE IDENTIFIED WITH A PERMANENT LABEL INDICATING THE AREA IT SERVES, IN ACCORDANCE WITH 2018 IMC SECTION 304.11.

AIR BALANCE NOTE:

THE CONTRACTOR SHALL PROVIDE THE CITY OF CHANDLER A FINAL AIR BALANCE REPORT PRIOR TO CALLING FOR A FINAL INSPECTION. ALSO, PROVIDE ALL EQUIPMENT MANUFACTURER'S INSTALLATION INSTRUCTIONS AVAILABLE AT TIME OF INSPECTION PER 2018 IMC SECTIONS 106, 403, 508, AND 513 AND PER 2018 IECC SECTION C408.2.2.

1 MECHANICAL HVAC FLOOR PLAN

SCALE: 1/2"=1'-0"

1 0 1 2 3 4 5 FEET

NORTH

1620 West Fountainhead Pkwy
Suite 501
Tempe, Arizona 85282
Phone: (480) 893-8860
Improving Arizona's Infrastructure Since 1942

WILSON ENGINEERS

CITY OF CHANDLER
RECLAIMED WATER INTERCONNECT FACILITY

RWIF – ELECTRICAL BUILDING
MECHANICAL HVAC FLOOR PLAN

CITY PROJECT NO. WW1901.203
WILSON PROJECT NO. 21007

Design: RTW	Drawn: RTW	Checked: JWK
Date: 02/2022	Wilson Project No.: 19038	

Revision	Date	Description	By

VERIFY SCALES
BAR IS ONE INCH ON ORIGINAL DRAWING
0 1"
IF NOT ONE INCH ON THIS SHEET, ADJUST SCALES ACCORDINGLY

Registered Professional Engineer (Mechanical) CERTIFICATE NO. 55235 JAMES W. KENNELLY Date Signed 02/14/22 ARIZONA U.S.A.

KENNELLY & ASSOCIATES ENGINEERING
16435 N. Scottsdale Rd., Suite 290 | Scottsdale, AZ 85254
O: 602.612.4822 | www.KennellyEngineering.com
KAE Job No. 21025 Designed By: RTW

Sheet No. H-1.82

AGENCY REVIEW

XREFS: 21025 – TB – RWIF Electrical Building; 21025 – A1 – Electrical Building Floor Plan; JWK Engineers Seal and Signature – AZ

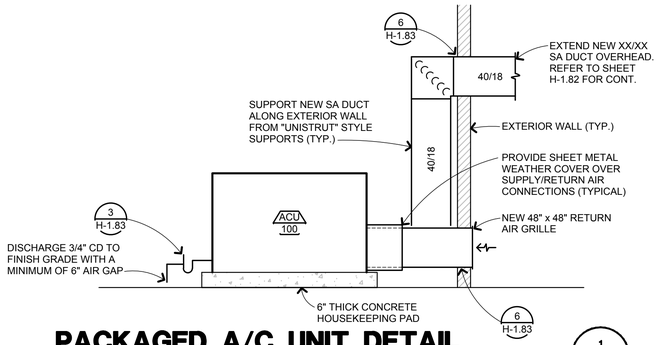

PACKAGED A/C UNIT DETAIL

N.T.S.

1 / H-1.83

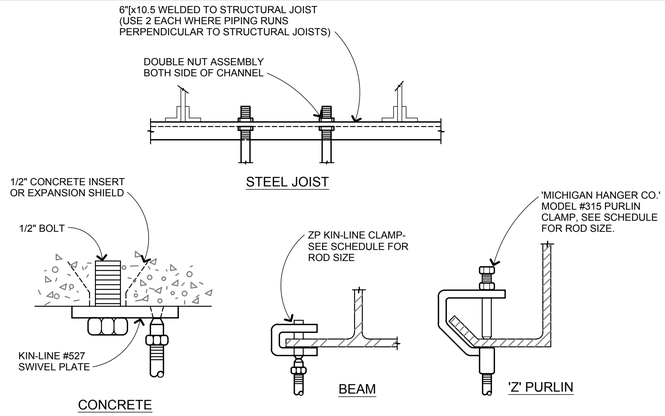

HANGER ATTACHMENT DETAILS

N.T.S.

2 / H-1.83

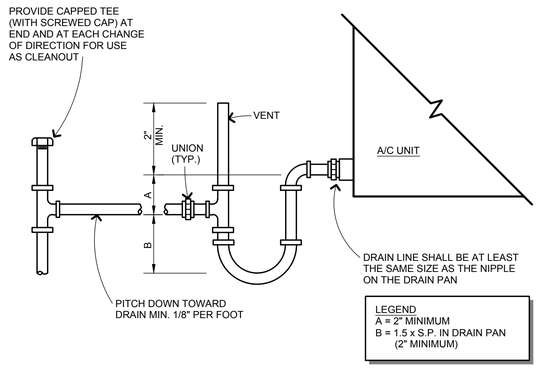

CONDENSATE DRAIN DETAIL

N.T.S.

3 / H-1.83

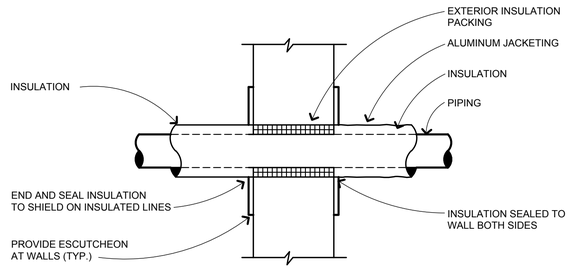

PIPE THROUGH WALL DETAIL

N.T.S.

4 / H-1.83

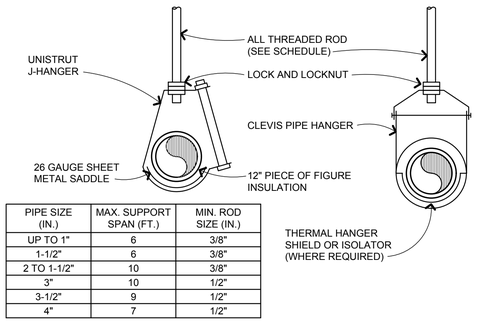

PIPE SIZE (IN.)	MAX. SUPPORT SPAN (FT.)	MIN. ROD SIZE (IN.)
UP TO 1"	6	3/8"
1-1/2"	6	3/8"
2 TO 1-1/2"	10	3/8"
3"	10	1/2"
3-1/2"	9	1/2"
4"	7	1/2"

PIPE HANGER DETAIL

N.T.S.

5 / H-1.83

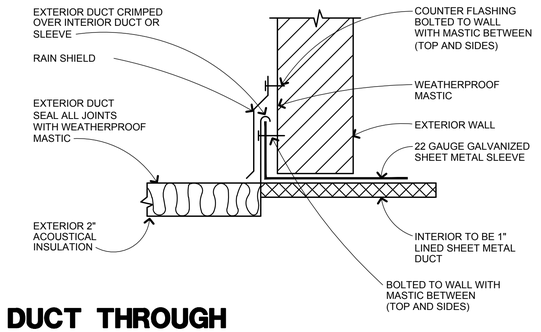

DUCT THROUGH EXTERIOR WALL DETAIL

N.T.S.

6 / H-1.83

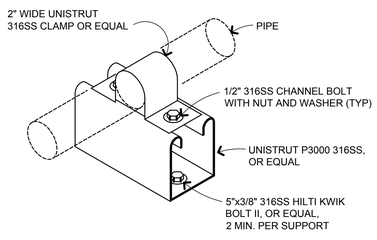

PIPE SUPPORT DETAIL

N.T.S.

7 / H-1.83

1620 West Fountainhead Pkwy
Suite 501
Tempe, Arizona 85282
Phone: (480) 883-8860
Improving Arizona's Infrastructure Since 1942

WILSON ENGINEERS

CITY OF CHANDLER
RECLAIMED WATER INTERCONNECT FACILITY

RWIF – ELECTRICAL BUILDING
MECHANICAL DETAILS

CITY PROJECT NO. WW1901.203
WILSON PROJECT NO. 21007

Revision	Date	Description	By

Design: RTW
Date: 02/2022
Drawn: RTW
Wilson Project No.: 19038
Checked: JWK

VERIFY SCALES
BAR IS ONE INCH ON ORIGINAL DRAWING
0 1"
IF NOT ONE INCH ON THIS SHEET, ADJUST SCALES ACCORDINGLY

Registered Professional Engineer (General) CERTIFICATE NO. 55235 JAMES W. KENNELLY Date Signed 02/14/22 ARIZONA U.S.A.

KENNELLY & ASSOCIATES ENGINEERING
16435 N. Scottsdale Rd., Suite 290 | Scottsdale, AZ 85254
O: 602.612.4822 | www.KennellyEngineering.com
KAE Job No. 21025 Designed By: RTW

Sheet No. H-1.83

AGENCY REVIEW

XREFS: 21025 – TB – RWIF Electrical Building; JWK Engineers Seal and Signature – AZ

H:\2021\21025 – CHANDLER AIRPORT PORTABLE BUILDINGS\MECH\RWIF ELECTRICAL BUILDING\21025 – H-1.83 – MECHANICAL DETAILS.DWG, 2/14/2022 11:35:38 AM, Rayford Winn, 1:2.18867919

ELECTRICAL SYMBOLS LEGEND

SINGLE LINE SYMBOLS

- KVA / PRI V / SEC V / PHASE, WIRE — TRANSFORMER
- AMPS / POLES — CIRCUIT BREAKER, SHOWN WITH TRIP RATING AND NUMBER OF POLES
- AMPS MCP / POLES — MOTOR CIRCUIT PROTECTOR WITH TRIP RATING AND NUMBER OF POLES
- MV CABLE TERMINATION
- 5 — MOTOR STARTER WITH NEMA SIZE
- O.L. — THERMAL OVERLOAD RELAY
- LIQUID TIGHT CONDUIT
- HP — MOTOR, NUMBER DESIGNATES NEMA HORSEPOWER SIZE
- CONDUIT SEALOFF
- JUNCTION BOX WITH POWER DISTRIBUTION BLOCK OR LUGS
- 5:1200 — CURRENT TRANSFORMER (XX:YY) RATIO
- FUSE
- AMPS / POLES — DISCONNECT SAFETY SWITCH
- SSS/BC — SOLID STATE STARTER & BYPASS CONTACTOR
- EOL — ELECTRONIC OVERLOAD RELAY
- HF — HARMONIC FILTER
- VFD — VARIABLE FREQUENCY DRIVE
- LR — LINE REACTOR
- G — GENERATOR
- BOND TO METALLIC WATER PIPE
- GROUND CONNECTION
- UM — UTILITY METER
- FUSED DISCONNECT SAFETY SWITCH

POWER, LIGHTING & GROUNDING PLAN SYMBOLS

- M — MOTOR
- DISCONNECT SWITCH
- $ — SINGLE POLE SWITCH
- $3 — 3 WAY SWITCH
- $4 — 4-WAY SWITCH
- $M — MANUAL MOTOR STARTER
- SPECIAL PURPOSE RECEPTACLE
- DUPLEX RECEPTACLE
- GFCI — DUPLEX RECEPTACLE GROUND FAULT INTERRUPT
- GROUND ROD
- GROUND ROD WITH TEST WELL
- GROUND NODE CONNECTION
- GROUND "UFER" TO CONCRETE REBAR
- ANTENNA MAST
- 3 — CONDUIT HOME RUN NUMBER INDICATES QUANTITY OF CONDUCTORS INCLUDING GROUND
- S — SMOKE DETECTOR
- T — TEMPERATURE DETECTOR
- CCTV SECURITY CAMERA
- T — TEMPERATURE THERMOSTAT
- DEVICE (LOCATED ON PLAN)
- TELEPHONE OUTLET
- K — KIRK-KEY INTERLOCK

SCHEMATIC SYMBOLS

- CR — CONTROL RELAY
- TDR — TIME DELAY RELAY
- ETM — ELAPSED TIME METER
- MS — MOTOR STARTER
- MCR — MASTER CONTROL RELAY
- AR — ALARM RELAY
- LLR — LEAD/LAG ALTERNATING RELAY
- A — PILOT LIGHT LETTER INDICATES COLOR R=RED, A=AMBER, B=BLUE, G=GREEN
- R — ALARM BEACON, LETTER INDICATES COLOR R=RED, A=AMBER, B=BLUE, G=GREEN
- TERMINAL BLOCK
- PUSHBUTTON NORMALLY OPEN
- PUSHBUTTON NORMALLY CLOSED
- ESTOP — E-STOP PUSHBUTTON NORMALLY CLOSED
- LOCKOUT STOP PUSH BUTTON
- NORMALLY OPEN CONTACT
- NORMALLY CLOSED CONTACT
- HAND / AUTO — XO — 2 POSITION SELECTOR SWITCH POSITION LEGEND: X=CLOSED O=OPEN
- OFF / HAND / AUTO — OOX — 3 POSITION SELECTOR SWITCH HAND – OFF – AUTO POSITION LEGEND: X=CLOSED O=OPEN
- 2 3 / 1 4 — OOOX — 4 POSITION SELECTOR SWITCH
- T — ICTO — TIMER RELAY CONTACT INSTANTANEOUS CLOSE TIME DELAY OPEN
- T — IOTC — TIMER RELAY CONTACT NORMALLY OPEN TIME DELAY CLOSE
- T — NCTO — TIMER RELAY CONTACT NORMALLY CLOSED TIME DELAY OPEN
- TEMPERATURE SWITCH NORMALLY CLOSED OPEN ON RISING TEMPERATURE
- TEMPERATURE SWITCH NORMALLY OPEN CLOSED ON RISING TEMPERATURE
- LIMIT SWITCH NORMALLY CLOSED
- LIMIT SWITCH NORMALLY CLOSED HELD OPEN
- LIMIT SWITCH NORMALLY OPEN
- LIMIT SWITCH NORMALLY OPEN HELD CLOSED
- FLOAT SWITCH OPENS ON RISING LEVEL CLOSES ON FALLING LEVEL
- FLOAT SWITCH CLOSES ON RISING LEVEL OPENS ON FALLING LEVEL
- FLOW SWITCH, CLOSES ON LESSER FLOW OPENS ON GREATER FLOW
- FLOW SWITCH, CLOSES ON GREATER FLOW OPENS ON LESSER FLOW
- PRESSURE SWITCH, OPENS ON GREATER PRESSURE, CLOSES ON LESSER PRESSURE
- PRESSURE SWITCH, CLOSES ON GREATER PRESSURE, OPENS ON LESSER PRESSURE
- FUSE BLOCK WITH DISCONNECT
- PLC / DCS OUTPUT CONTACT
- TE — MOTOR WINDINGS THERMISTOR
- PC — PHOTO CELL
- FAN — FAN
- SOLENOID
- DEVICE LOCATED AT REMOTE LOCATION
- HEATING ELEMENT
- HORN — AUDIBLE ALARM
- PLC / DI / + / - — GENERIC PLC I/O POINT
- L / GND / N / + / - — DC POWER SUPPLY

ELECTRICAL ABBREVIATIONS

A	AMPERE
AFD	ADJUSTABLE FREQUENCY DRIVES
AFF	ABOVE FINISHED FLOOR
AI	ANALOG INPUT
AIC	AMPS INTERRUPTING CAPACITY
AO	ANALOG OUTPUT
AS	AIR SUPPLY
ATS	AUTOMATIC TRANSFER SWITCH
BC	BYPASS CONTACTOR
C	CONDUIT
CB	CIRCUIT BREAKER
CCW	COUNTER CLOCKWISE
CL2	CHLORINE
CON	CONTACTOR
CPB	CONTROL PULLBOX
CU	COPPER, BARE
CV	CONTROL VALVE
CW	CLOCKWISE
DCS	DISTRIBUTED CONTROL SYSTEM
DI	DISCRETE INPUT
DO	DISCRETE OUTPUT
DSC	DISCONNECT SWITCH
DV/DT	DIFFERENTIAL VOLTAGE/TIME
DWG	DRAWING
ETM	ELAPSED TIME METER
EOL	ELECTRONIC OVERLOAD
EXIST	EXISTING
FA	FOUL AIR
FC	FAIL CLOSED
FE	FLOW ELEMENT
FLA	FULL LOAD AMPS
FS	FLOW SWITCH
FVNR	FULL VOLTAGE NON-REVERSING
FW	FINISHED WATER
GFCI	GROUND FAULT CIRCUIT INTERRUPTER
GFP	GROUND FAULT PROTECTION
GND	GROUND
GPD	GALLONS PER DAY
GPH	GALLONS PER HOUR
GPM	GALLONS PER MINUTE
GRS	GALVANIZED RIGID STEEL
H, HI	HIGH
HH	HAND HLOE
H2S	HYDROGEN SULFIDE
HMI	HUMAN MACHINE INTERFACE
HOA	HAND-OFF-AUTO
HOR	HAND-OFF-REMOTE
I	CURRENT
IC	INSTRUMENTATION CABLE
ICR	INTERMITTENT CYCLE REACTOR
IO	INPUT/OUTPUT
ISC	SHORT CIRCUIT CURRENT
JB	JUNCTION BOX
L, LO	LOW
LAN	LOCAL AREA NETWORK
LC	LOOP CONTROLLER
LCL	LEVEL CONTROL, LOW
LCP	LOCAL CONTROL PANEL
LOS	LOCK-OUT-STOP
LOR	LOCAL/OFF/REMOTE
LP	480V POWER PANEL
LS	LEVEL (i.e. FLOAT) SWITCH
LTC	LIQUID TIGHT FLEXIBLE CONDUIT
M	MOTOR
MA	MANUAL/AUTO
mA	MILLIAMP
MAX	MAXIMUM
MC	MANUFACTURER'S CABLE
MCB	MAIN CIRCUIT BREAKER
MCC	MOTOR CONTROL CENTER
MCP	MOTOR CIRCUIT PROTECTOR
MFR(S)	MANUFACTURER(S)
MGD	MILLION GALLONS PER DAY
MGL	MILLIGRAMS PER LITER
MH	MANHOLE
MIN	MINIMUM
MOV	MOTOR OPERATED VALVE
MMR	MOTOR MANAGEMENT RELAY
MTU	MASTER TELEMETRY UNIT
NEC	NATIONAL ELECTRICAL CODE
NECA	NATIONAL ELECTRICAL CONTRACTOR ASSOCIATION
N.C.	NORMALLY CLOSED
N.O.	NORMALLY OPEN
NOTC	NORMALLY OPEN TIMED CLOSED
NPW	NON-POTABLE WATER
NS	NITROGEN SUPPLY
NTS	NOT TO SCALE
NTU	TURBIDITY
OF	OVERFLOW
OIT	OPERATOR INTERFACE TERMINAL
OL	OVERLOAD
OO	ON/OFF (MAINTAINED)
OR	OFF-REMOTE
OSC	OPEN/STOP/CLOSE
P	PHASE
PB	PULL BOX
PCP	PROCESS CONTROL PANEL
PFR	PHASE/POWER FAILURE RELAY
PI	PULSE INPUT
PLC	PROGRAMMABLE LOGIC CONTROLLER
PLI	PLANT INFLUENT
PMP	PUMP
PNL	PANEL
PO	PULSE OUTPUT
PPB	POWER PULLBOX
PPG	POUNDS PER GALLON
PPH	POUNDS PER HOUR
PPM	PARTS PER MILLION
PP	LIGHTING POWER PANEL
PRES	PRESSURE
PS	PRESSURE SWITCH
PSH	PRESSURE SWITCH, HIGH
PSI	POUNDS PER SQUARE INCH
PV	PROCESS VARIABLE
RAS	RETURN ACTIVATED SLUDGE
RW	RAW WATER
RCL	REMOTE I/O
RF	RADIO FREQUENCY
RIO	REMOTE INPUT OUTPUT
RS	RAW SEWAGE
RSP	RAW SEWAGE PUMP
RST	RESET
RTD	RESISTANCE TEMPERATURE DETECTOR
RTU	REMOTE TELEMETRY UNIT
RWT	REFLECTED WAVE TRAP
SCA	SHORT CIRCUIT AMPS
SEQ	SERVICE ENTRANCE EQUIPMENT
SES	SERVICE ENTRANCE SECTION
SLC	SINGLE LOOP CONTROLLER
SLOS	START-LOCK-OFF-STOP
SMC	SUBMERSIBLE MANUFACTURER CABLE
SO2	SULFUR DIOXIDE
SP	SET POINT
SPC	SPARE CONDUIT
SPR	SPARE
SS	START/STOP
SSS	SOLID STATE STARTER (SOFT START)
ST	SHUNT TRIP
STR	STARTER
TC	TELEPHONE CABLE
TS	TEMPERATURE SWITCH
TVSS	TRANSIENT VOLTAGE SURGE SUPPRESSOR
TYP	TYPICAL
UG	UNDERGROUND
V	VOLT
VFD	VARIABLE FREQUENCY DRIVE
W	WATT, WIRE
WAS	WASTE ACTIVATED SLUDGE
WP	WEATHERPROOF
XFMR	TRANSFORMER
XMTR	TRANSMITTER
ZS	POSITION (i.e., LIMIT) SWITCH
ZSC	INTRUSION SWITCH

CONDUIT BLOCK DIAGRAM

- CONDUIT
- CORD
- EQUIPMENT TAG AND DESCRIPTION
- CXXX / PXXX — GROUPED CONDUIT AND CIRCUIT IDENTIFICATION TAGS. REFER TO THE POWER SINGLE-LINE AND CONDUIT BLOCK DIAGRAMS FOR CONDUIT SIZES.

PLANS ELECTRICAL LINETYPES

- EXPOSED CONDUIT
- EXISTING EXPOSED CONDUIT
- UNDERGROUND CONDUIT
- EXISTING UNDERGROUND CONDUIT
- BARE COPPER GROUND CONDUCTOR
- EXISTING OR FUTURE
- NEW ELECTRICAL EQUIPMENT
- DEMOLITION
- DETAIL VIEW OR MATCHING
- CAPPED CONDUIT STUB OUT
- HAZARDOUS BOUNDRIES

NOTES

1. THE COMPLETED INSTALLATION SHALL COMPLY WITH APPLICABLE FEDERAL, STATE, AND LOCAL CODES, ORDINANCES, AND REGULATIONS. THE CONTRACTOR SHALL OBTAIN NECESSARY PERMITS AND INSPECTIONS REQUIRED BY THE AUTHORITIES HAVING JURISDICTION. ALL WORK SHALL BE COMPLETED IN A NEAT, WORKMANLIKE MANNER IN ACCORDANCE WITH THE LATEST NECA STANDARDS OF INSTALLATION UNDER COMPETENT SUPERVISION. INSTALL GROUNDING PER NEC.
2. VISIT THE SITE PRIOR TO BIDDING TO BECOME FAMILIAR WITH EXISTING CONDITIONS AND OTHER FACTORS, WHICH MAY EFFECT THE EXECUTION OF THE WORK. INCLUDE ALL RELATED COSTS IN THE INITIAL BID PROPOSAL.
3. THE CONTRACTOR SHALL COORDINATE WORK WITH THE UTILITIES PROVIDING SERVICES ON THIS PROJECT, AND SHALL COMPLY WITH ALL THEIR INSTALLATION REQUIREMENTS.
4. ALL MATERIALS SHALL BE NEW AND OF THE BEST QUALITY, MANUFACTURED IN ACCORDANCE WITH NEMA, ANSI, UL, OR OTHER APPLICABLE STANDARDS. THE USE OF MANUFACTURERS' NAMES, MODELS, AND NUMBERS IS INTENDED TO ESTABLISH STYLE, QUALITY, APPEARANCE, USEFULNESS, AND BID PRICE.
5. PROTECT ALL ELECTRICAL MATERIAL AND EQUIPMENT INSTALLED AGAINST DAMAGE BY OTHER TRADES, WEATHER CONDITIONS, OR ANY OTHER PREVENTABLE CAUSES. EQUIPMENT DAMAGED DURING SHIPPING OR CONSTRUCTION, PRIOR TO ACCEPTANCE BY THE ENGINEER OR THE OWNER, WILL BE REJECTED AS DEFECTIVE.
6. LEAVE THE SITE CLEAN. REMOVE ALL DEBRIS, EMPTY CARTONS, TOOLS, CONDUIT, WIRE SCRAPS AND ALL MISCELLANEOUS SPARE EQUIPMENT AND MATERIALS USED IN THE WORK DURING CONSTRUCTION. ALL COMPONENTS SHALL BE FREE OF DUST, GRIT AND FOREIGN MATERIALS, LEFT AS NEW BEFORE FINAL ACCEPTANCE OF WORK. DAMAGED PAINT AND FINISHES SHALL BE TOUCHED UP OR REPAINTED WITH MATCHING COLOR PAINT AND FINISH.
7. UNDERGROUND CONDUITS SHALL BE SCHEDULE 40 PVC. MINIMUM CONDUIT DEPTH SHALL BE 24 INCHES. MINIMUM UNDERGROUND CONDUIT SIZE SHALL BE 1 INCH.
8. CONDUITS SHALL BE MARKED AT EACH END WITH MATCHING NUMBERED BRASS TAGS. SPARE CONDUITS SHALL HAVE A PULL STRING INSTALLED AND SECURED.
9. SAFETY SWITCHES, ELECTRICAL DISTRIBUTION EQUIPMENT, CONTROL PANELS, AND OTHER ELECTRICAL DEVICES SHALL BE UL LISTED, AND RATED FOR HEAVY DUTY SERVICE.
10. WIRING DEVICES SHALL BE SPECIFICATION GRADE.
11. THE CONTRACTOR IS RESPONSIBLE FOR MANAGING, SCHEDULING, DOCUMENTING, AND PERFORMING THE WORK SO THAT A COMPLETE ELECTRICAL, INSTRUMENTATION AND CONTROL SYSTEM FOR THE FACILITY IS PROVIDED. ACCURATE SHOP AND RECORD DRAWINGS, AND OEM MANUALS SHALL BE SUBMITTED PRIOR TO FINAL ACCEPTANCE OF THE WORK.
12. TYPICAL DETAILS SHALL APPLY IN ALL CASES, WHETHER SPECIFICALLY REFERRED TO OR NOT.

1620 West Fountainhead Pkwy
Suite 501
Tempe, Arizona 85282
Phone: (480) 893-8860

Improving Arizona's Infrastructure Since 1942

WILSON ENGINEERS

CITY OF CHANDLER
RECLAIMED WATER INTERCONNECT FACILITY
ELECTRICAL SYMBOLS AND LEGEND

CITY PROJECT NO. WW1901.203
WILSON PROJECT NO. 21007

Design: PKP	Drawn: ER	Checked: PKP
Date: 02/2022	Wilson Project No.: 21007	

Revision	Date	Description	By

VERIFY SCALES
BAR IS ONE INCH ON ORIGINAL DRAWING
0 — 1"
IF NOT ONE INCH ON THIS SHEET, ADJUST SCALES ACCORDINGLY

Registered Professional Engineer — 68430 — PHANI KIRAN PEDDINTI — DATE SIGNED 02-23-2022 — ARIZONA U.S.A.

Sheet No. **E-0.00**

AGENCY REVIEW

NOTES:

1. SEE ELECTRICAL LIGHTING PLANS FOR FIXTURE TYPES AND LOCATIONS.

LIGHTING FIXTURE SCHEDULE

LF–TITLE	SYMBOL	DESCRIPTION	MOUNTING	MANUFACTURER	LAMPS	REMARKS
A		EVT4, 120V, 59W LED POLYCARBONATE ENCLOSURE WITH ASYMMETRIC OPTICAL DIFFUSER	SUSPENDED OR SURFACE MOUNT	HOLOPHANE, EVT4 59LED ASYMMETRIC OR EQUAL	ONE 59.6–WATT LED, AIMED DOWN POS.	PROVIDE CHAIN–MOUNT BRACKET, STAINLESS STEEL WIRE HOOK AND 36" CHAIN SET FOR SUSPENDED MOUNT
B		120V, DSXO LED WITH (2) 20 LED LIGHT ENGINE, SINGLE PIECE DIE–CAST ALUMINUM WITH INTEGRAL HEAT SINK PINS, THERMOSET POWDER COAT FINISH WITH PRECISION MOLDED ACRYLIC LENSE. UL LISTED FOR WET LOCATIONS.	POLE MOUNTED	LITHONIA D–SERIES, OR EQUAL	120V, LED 91W/LAMP	MOUNT ON TOP OF SQUARE 10' POLE CONTROL FROM PHOTOCELL
C		JHBL, 120V, LED 1800LM WIDE DISTRIBUTION LENSED 80CRI 800K CCT, RUGGED DIE–CAST ALUMINUM HOUSING, CORROSION RESISTANCE WITH WIRE GUARD, LISTED FOR WET LOCATION.	SUSPENDED	LITHONIA JHBL 1800LM SERIES, OR EQUAL	120V, LED ARRAY LAMPS, 15005 LUMENS/LAMP 182.6 WATTS	
C1		SIMILAR TO TYPE C, EXCEPT 277V	SUSPENDED	LITHONIA JHBL 1800LM SERIES, OR EQUAL	277V, LED ARRAY LAMPS, 15005 LUMENS/LAMP 182.6 WATTS	
D		JHBL, 120V, LED 2400LM WIDE DISTRIBUTION LENSED 80CRI 800K CCT, RUGGED DIE–CAST ALUMINUM HOUSING, CORROSION RESISTANCE WITH WIRE GUARD, LISTED FOR WET LOCATION.	SUSPENDED	LITHONIA JHBL 2400LM SERIES, OR EQUAL	120V, LED ARRAY LAMPS, 19699.9 LUMENS/LAMP 234.1 WATTS	
E		120V, FLOOD LIGHT LED LIGHTING. FABRICATED ALUMINUM HOUSING WITH BAKED–ON GRAY EPOXY FINISH, ONE PIECE SILICONE GASKET, TEMPERED GLASS LENS, STAINLESS STEEL HARDWARE. U.L. LISTED FOR USE IN WET LOCATIONS.	WALL MOUNTED	RIG–A–LITE, LFL SERIES, OR EQUAL	120V, LED 259.54W/LAMP 13561 LUMENS	
F	F	120V, W4P LED, 4000K 2198 LED, T3M OPTICS AND 700mA DRIVER, TEMP 57.0°C	WALL OR SURFACE MOUNT	HOLOPHANE, W4P LED 20C 700 40K T3M OR EQUAL	LED 45 WATTS	CONTROL FROM PHOTOCELL OR LIGHTING CONTACTOR
X		120V, EXIT SIGN WITH TWIN LED REMOTE HEAD EMERGENCY LIGHT, MAINTENANCE FREE HIGH OUTPUT NI–CAD BATTERY. HOUSING SHALL BE MOLDED IN HIGH IMPACT HEAT RESISTANT THERMOPLASTIC AND CORROSION PROOF, FIXTURE SHALL BE UL LISTED. TO BE RATED FOR USE IN AREAS REQUIRING NEMA 4, 4X AND 12 RATED EQUIPMENT PREMIUM GRADE.	WALL OR CEILING MOUNT	HOLOPHANE, QM LED OR EQUAL	TWO 1.5W/9.6V WHITE LED	

1620 West Fountainhead Pkwy
Suite 501
Tempe, Arizona 85282
Phone: (480) 893–8860
Improving Arizona's Infrastructure Since 1942

WILSON ENGINEERS

CITY OF CHANDLER
RECLAIMED WATER INTERCONNECT FACILITY

LIGHTING FIXTURE SCHEDULE

CITY PROJECT NO. WW1901.203
WILSON PROJECT NO. 21007

Design: PKP
Drawn: ER
Checked: PKP
Date: 02/2022
Wilson Project No.: 21007

Revision	Date	Description	By

VERIFY SCALES
BAR IS ONE INCH ON ORIGINAL DRAWING
0 1"
IF NOT ONE INCH ON THIS SHEET, ADJUST SCALES ACCORDINGLY

Registered Professional Engineer
68430
PHANI KIRAN PEDDINTI
DATE SIGNED 02/23/2022
ARIZONA U.S.A.

Sheet No. **E–0.01**

G:\PROJECT\21007\CADD\DESIGN\ELECTRICAL\21007 E–0.01.DWG, 2/23/2022 12:44:10 PM, PPeddinti, 1:1

AGENCY REVIEW

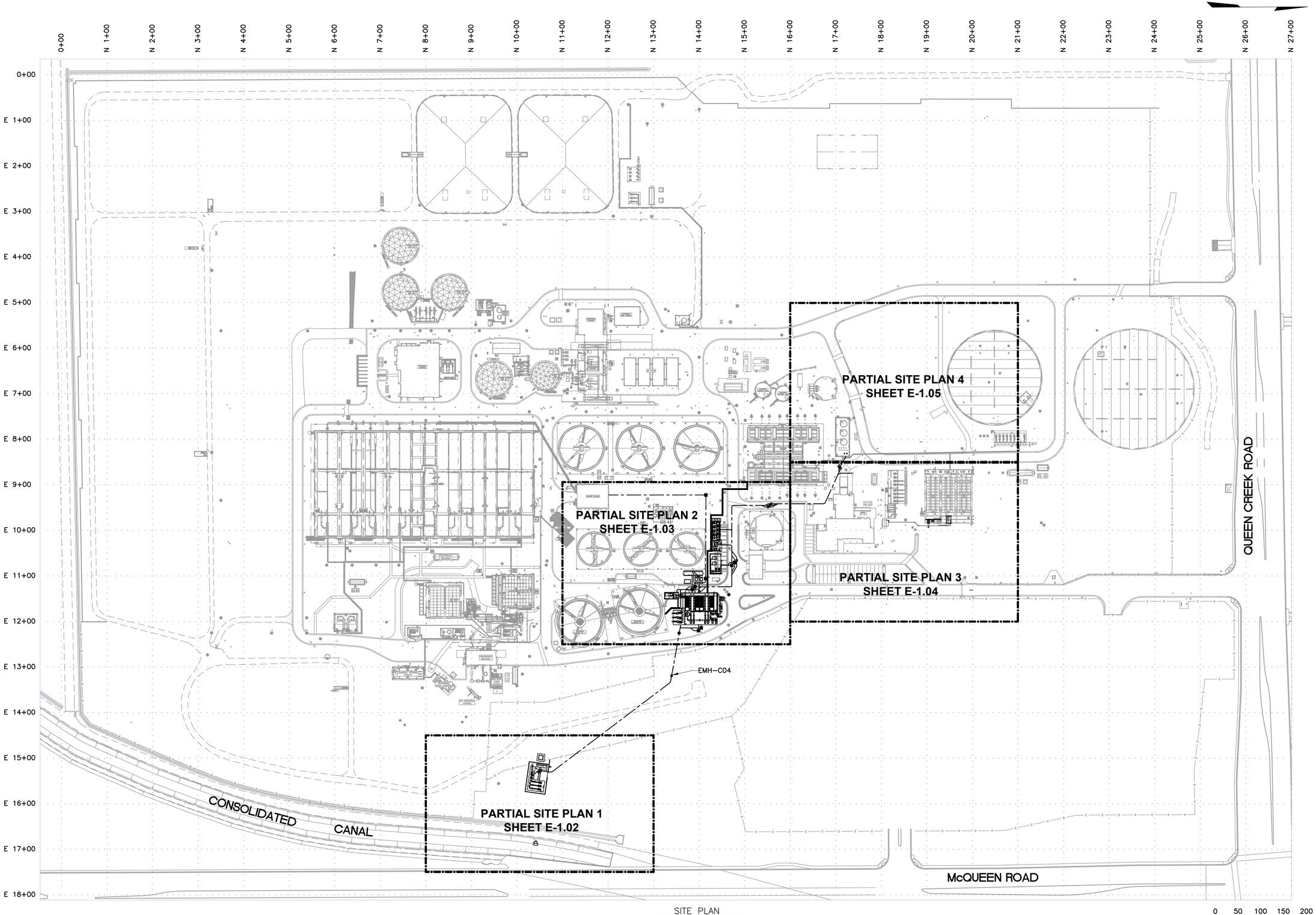

SITE PLAN
SCALE = 1"=100'

0 50 100 150 200
SCALE: 1" = 100'

1620 West Fountainhead Pkwy
Suite 501
Tempe, Arizona 85282
Phone: (480) 893-8860

Improving Arizona's
Infrastructure Since 1942

WILSON ENGINEERS

CITY OF CHANDLER
RECLAIMED WATER INTERCONNECT FACILITY
OVERALL ELECTRICAL SITE PLAN

CITY PROJECT NO. WW1901.203
WILSON PROJECT NO. 21007

Revision	Date	Description	By

Design: SC
Date: 02/2022
Drawn: SC
Wilson Project No.: 21007
Checked: PKP

VERIFY SCALES
BAR IS ONE INCH ON ORIGINAL DRAWING
0 1"
IF NOT ONE INCH ON THIS SHEET, ADJUST SCALES ACCORDINGLY

Registered Professional Engineer
Phani Kiran Peddinti
68430
PHANI KIRAN PEDDINTI
DATE SIGNED 02-23-2022
ARIZONA U.S.A.

Sheet No. **E-1.01**

XREFS: XC-SITE; C-GRID; TB-WE-D; C-SITE; E-SITE ELECT; SEAL-PKP; SIGN-PKP

G:\PROJECT\21007\CADD\DESIGN\ELECTRICAL\21007 E-1.01.DWG, 2/23/2022 12:44:22 PM, PPeddinti, 1:1

AGENCY REVIEW

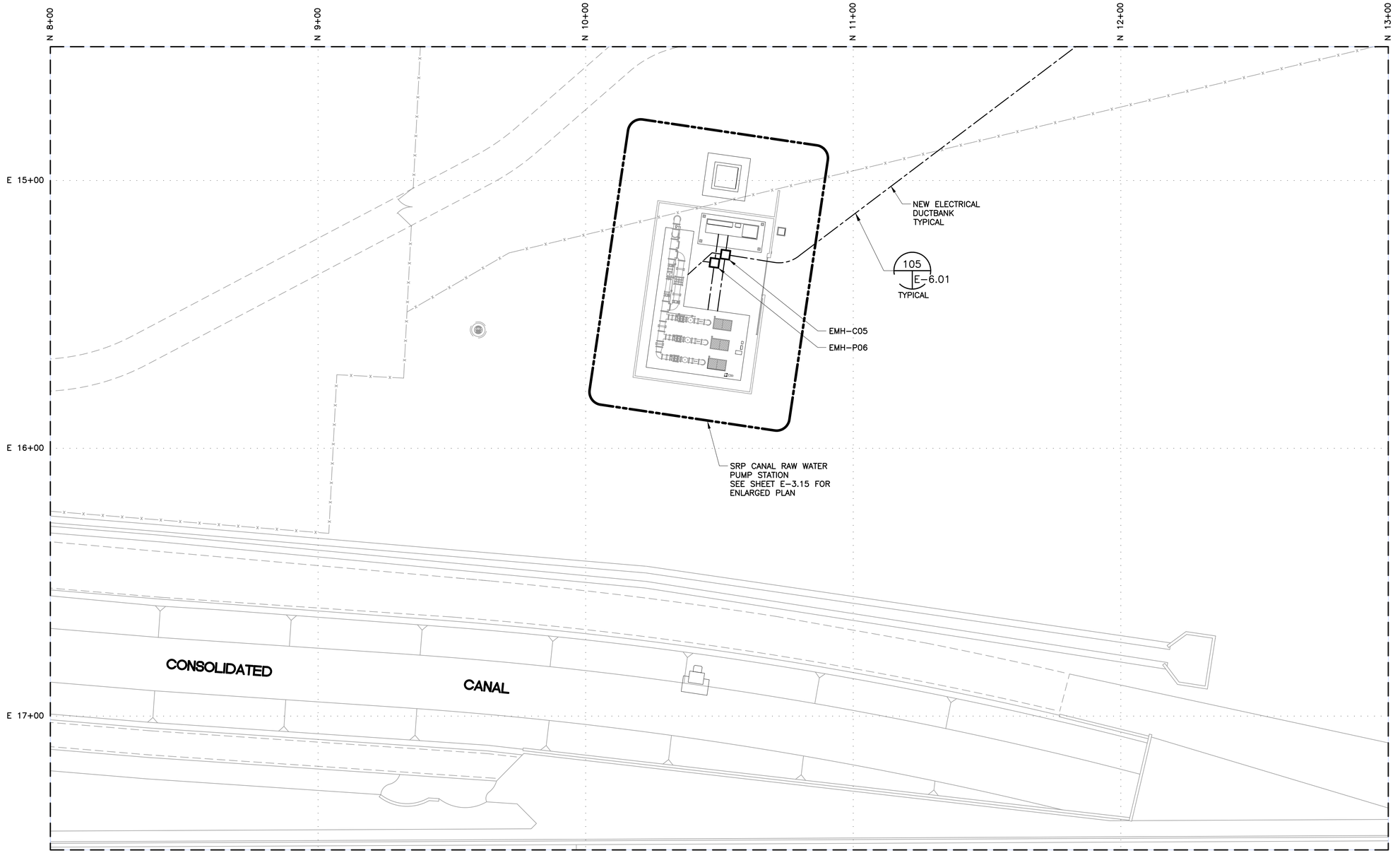

0 10 20 40
1" = 20'

AGENCY REVIEW

1620 West Fountainhead Pkwy
Suite 501
Tempe, Arizona 85282
Phone: (480) 893-8860
Improving Arizona's Infrastructure Since 1942

WILSON ENGINEERS

CITY OF CHANDLER
RECLAIMED WATER INTERCONNECT FACILITY
RWIF – PARTIAL SITE
ELECTRICAL PLAN – 1

CITY PROJECT NO. WW1901.203
WILSON PROJECT NO. 21007

Design: ER	Drawn: ER	Checked: PKP
Date: 02/2022	Wilson Project No.: 21007	

Revision	Date	Description	By

VERIFY SCALES
BAR IS ONE INCH ON ORIGINAL DRAWING
0 1"
IF NOT ONE INCH ON THIS SHEET, ADJUST SCALES ACCORDINGLY

Registered Professional Engineer
68430
PHANI KIRAN PEDDINTI
DATE SIGNED 02-23-2022
ARIZONA U.S.A.

Sheet No. **E-1.02**

XREFS: XC-SITE; C-GRID; TB-WE-D; C-SITE; E-SITE ELECT; SEAL-PKP; SIGN-PKP

G:\PROJECT\21007\CADD\DESIGN\ELECTRICAL\21007 E-1.02.DWG, 2/23/2022 12:44:31 PM, PPeddinti, 1:1

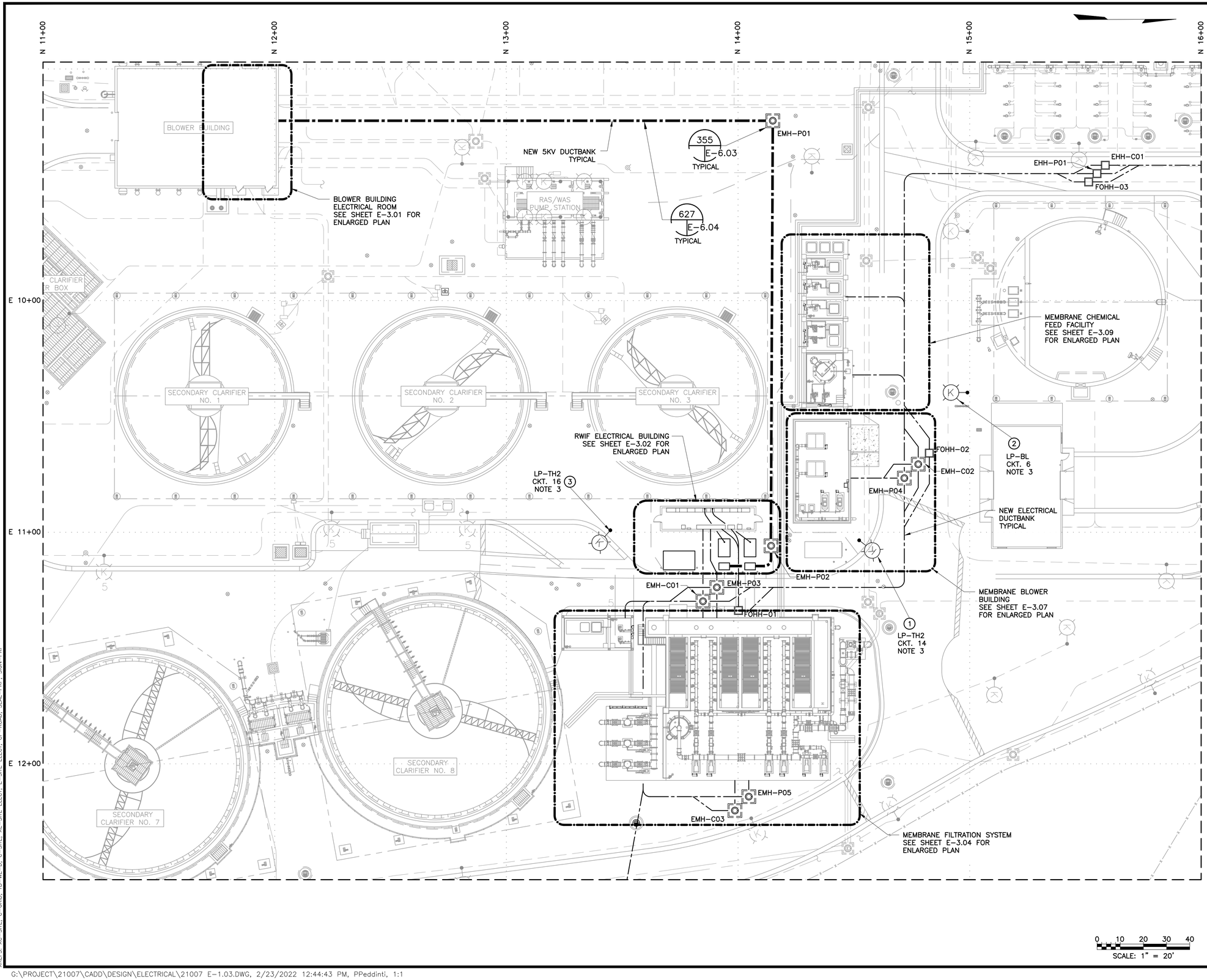

KEYED NOTES

1. RELOCATED LIGHT POLE 88
2. RELOCATED LIGHT POLE 89
3. RELOCATED LIGHT POLE 92

NOTES:

1. NO WORK TO COMMENCE WITHOUT APPROVED MOPO.
2. DUCTBANK RUNS SHOWN IN THIS SHEET ARE ONLY FOR REPRESENTATION PURPOSES. CONTRACTOR TO COORDINATE DUCTBANK INSTALLATION WITH EXISTING DUCTBANK, PIPING AND OTHER SYSTEMS AND EQUIPMENT AND LOCATE SO AS TO AVOID INTERFERENCES.
3. RE-FEED THE RELOCATED LIGHT POLES AND OTHER LIGHT POLES THAT WERE IMPACTED. EXTEND EXISTING UNDERGROUND FEEDER CONDUITS AS NECESSARY.
4. SEE SHEETS E-5.01 THRU E-5.17 FOR POWER AND CONTROLS CONDUIT BLOCK DIAGRAMS.

1620 West Fountainhead Pkwy
Suite 501
Tempe, Arizona 85282
Phone: (480) 893-8860

Improving Arizona's Infrastructure Since 1942

WILSON ENGINEERS

CITY OF CHANDLER
RECLAIMED WATER INTERCONNECT FACILITY
RWIF - PARTIAL SITE ELECTRICAL PLAN - 2

CITY PROJECT NO. WW1901.203
WILSON PROJECT NO. 21007

Design: ER	Drawn: ER	Checked: PKP
Date: 02/2022	Wilson Project No.: 21007	

Revision	Date	Description	By

VERIFY SCALES
BAR IS ONE INCH ON ORIGINAL DRAWING
0 1"
IF NOT ONE INCH ON THIS SHEET, ADJUST SCALES ACCORDINGLY

Professional Engineer
68430
PHANI KIRAN PEDDINTI
DATE SIGNED 02-23-2022
ARIZONA U.S.A.

Sheet No. **E-1.03**

XREFS: XC-SITE; C-GRID; TB-WE-D; C-SITE; XE-SITE ELECT; E-SITE ELECT; CP-ROAD; SEAL-PKP; SIGN-PKP

G:\PROJECT\21007\CADD\DESIGN\ELECTRICAL\21007 E-1.03.DWG, 2/23/2022 12:44:43 PM, PPeddinti, 1:1

AGENCY REVIEW

N 16+00 | N 17+00 | N 18+00 | N 19+00 | N 20+00 | N 21+00

E 9+00 | E 10+00 | E 11+00 | E 12+00

EHH-C02

EHH-P02

EXISTING FOHH-FLT

EXISTING F.O. DUCTBANK

NEW ELECTRICAL DUCTBANK TYPICAL

105 / E-6.01 TYPICAL

ADMINISTRATION BUILDING ELECTRICAL ROOM SEE SHEET E-3.14 FOR ENLARGED PLAN

EFFLUENT PUMP STATION CONTROL ROOM SEE SHEET E-3.14 FOR ENLARGED PLAN

PARTIAL CHLORINE CONTACT BASIN SEE SHEET E-3.12 FOR ENLARGED PLAN

0 10 20 30 40
SCALE: 1" = 20'

NOTES:

1. NO WORK TO COMMENCE WITHOUT APPROVED MOPO.
2. DUCTBANK RUNS SHOWN IN THIS SHEET ARE ONLY FOR REPRESENTATION PURPOSES. CONTRACTOR TO COORDINATE DUCTBANK INSTALLATION WITH EXISTING DUCTBANK, PIPING AND OTHER SYSTEMS AND EQUIPMENT AND LOCATE SO AS TO AVOID INTERFERENCES.
3. SEE SHEETS E-5.01 THRU E-5.17 FOR POWER AND CONTROLS CONDUIT BLOCK DIAGRAMS.

1620 West Fountainhead Pkwy
Suite 501
Tempe, Arizona 85282
Phone: (480) 893-8860

Improving Arizona's Infrastructure Since 1942

WILSON ENGINEERS

CITY OF CHANDLER
RECLAIMED WATER INTERCONNECT FACILITY

RWIF - PARTIAL SITE
ELECTRICAL PLAN - 3

CITY PROJECT NO. WW1901.203
WILSON PROJECT NO. 21007

Design: ER	Drawn: ER	Checked: PKP
Date: 02/2022	Wilson Project No.: 21007	

Revision	Date	Description	By

VERIFY SCALES
BAR IS ONE INCH ON ORIGINAL DRAWING
0 1"
IF NOT ONE INCH ON THIS SHEET, ADJUST SCALES ACCORDINGLY

Registered Professional Engineer
68430
PHANI KIRAN PEDDINTI
DATE SIGNED 02-23-2022
ARIZONA U.S.A.

Sheet No. **E-1.04**

AGENCY REVIEW

XREFS: XC-SITE; C-GRID; TB-WE-D; C-SITE; XE-SITE ELECT; E-SITE ELECT; SEAL-PKP; SIGN-PKP

G:\PROJECT\21007\CADD\DESIGN\ELECTRICAL\21007 E-1.04.DWG, 2/23/2022 12:44:55 PM, PPeddinti, 1:1

N 16+00
N 17+00
N 18+00
N 19+00
N 20+00
N 21+00
E 5+00
E 6+00
E 7+00
E 8+00

BULK SODIUM HYPOCHLORITE FEED FACILITY
SEE SHEET E-3.13 FOR ENLARGED PLAN

NEW ELECTRICAL DUCTBANK TYPICAL

NOTES:

1. NO WORK TO COMMENCE WITHOUT APPROVED MOPO.
2. DUCTBANK RUNS SHOWN IN THIS SHEET ARE ONLY FOR REPRESENTATION PURPOSES. CONTRACTOR TO COORDINATE DUCTBANK INSTALLATION WITH EXISTING DUCTBANK, PIPING AND OTHER SYSTEMS AND EQUIPMENT AND LOCATE SO AS TO AVOID INTERFERECES.
3. SEE SHEETS E-5.01 THRU E-5.17 FOR POWER AND CONTROLS CONDUIT BLOCK DIAGRAMS.

0 10 20 30 40
SCALE: 1" = 20'

1620 West Fountainhead Pkwy
Suite 501
Tempe, Arizona 85282
Phone: (480) 893-8860

Improving Arizona's Infrastructure Since 1942

WILSON ENGINEERS

CITY OF CHANDLER
RECLAIMED WATER INTERCONNECT FACILITY
RWIF – PARTIAL SITE
ELECTRICAL PLAN – 4

CITY PROJECT NO. WW1901.203
WILSON PROJECT NO. 21007

Design: ER | Drawn: ER | Checked: PKP
Date: 02/2022 | Wilson Project No.: 21007

Revision	Date	Description	By

VERIFY SCALES
BAR IS ONE INCH ON ORIGINAL DRAWING
0 1"
IF NOT ONE INCH ON THIS SHEET, ADJUST SCALES ACCORDINGLY

Registered Professional Engineer
68430
PHANI KIRAN PEDDINTI
DATE SIGNED 02-23-2022
ARIZONA U.S.A.

Sheet No. **E-1.05**

XREFS: XC-SITE; C-GRID; TB-WE-D; C-SITE; XE-SITE ELECT; E-SITE ELECT; SEAL-PKP; SIGN-PKP

G:\PROJECT\21007\CADD\DESIGN\ELECTRICAL\21007 E-1.05.DWG, 2/23/2022 12:45:05 PM, PPeddinti, 1:1

AGENCY REVIEW

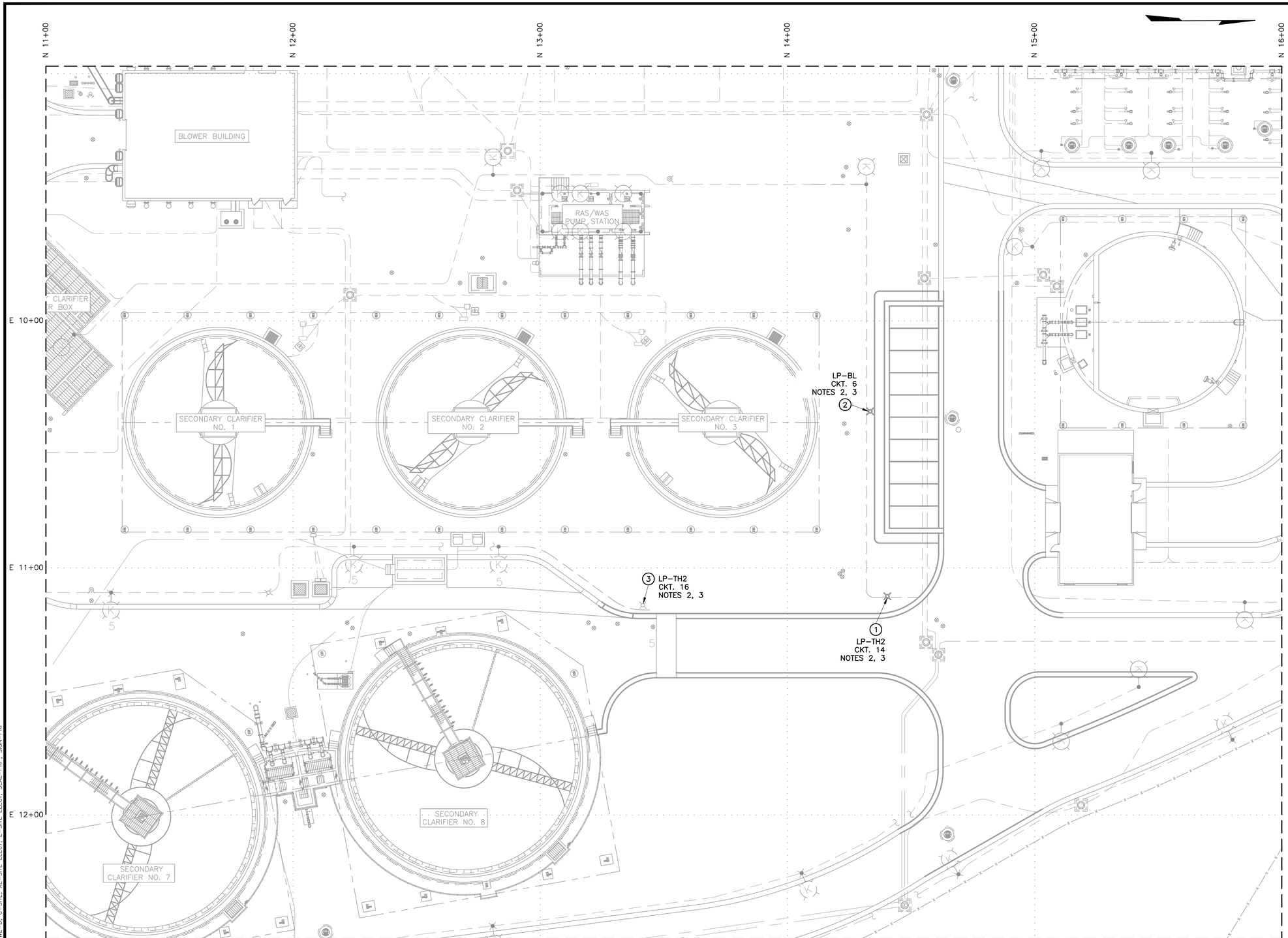

KEYED NOTES

1. EXISTING LIGHT POLE 88 TO BE RELOCATED
2. EXISTING LIGHT POLE 89 TO BE RELOCATED
3. EXISTING LIGHT POLE 92 TO BE RELOCATED

NOTES:

1. NO WORK TO COMMENCE WITHOUT APPROVED MOPO.
2. CONTRACTOR SHALL FIELD VERIFY AND CONFIRM THE LIGHTING PANEL AND CIRCUITS FEEDING THE EXISTING LIGHT POLES TO BE RELOCATED PRIOR TO ANY ELECTRICAL WORKS.
3. DE–ENERGIZE, LOCK OUT TAG OUT FEEDER BREAKERS FEEDING EXISTING LIGHT POLES, DISCONNECT AND RELOCATE EXISTING LIGHT POLES, REMOVE THE EXISTING ASSOCIATED UNDER GROUND FEEDER CONDUCTORS AS NECESSARY. SEE SHEET E–1.03 FOR LIGHT POLES NEW LOCATIONS.
4. PANEL LP–BL IS LOCATED IN BLOWER BUILDING ELECTRICAL ROOM.
5. PANEL LP–TH2 IS LOCATED IN THICKENING BUILDING ELECTRICAL ROOM.

0 10 20 40
1" = 20'

AGENCY REVIEW

1620 West Fountainhead Pkwy
Suite 501
Tempe, Arizona 85282
Phone: (480) 893–8860
Improving Arizona's Infrastructure Since 1942

WILSON ENGINEERS

CITY OF CHANDLER
RECLAIMED WATER INTERCONNECT FACILITY

RWIF – PARTIAL SITE
ELECTRICAL PLAN – DEMOLTION

CITY PROJECT NO. WW1901.203
WILSON PROJECT NO. 21007

Design: ER	Drawn: ER	Checked: PKP
Date: 02/2022	Wilson Project No.: 21007	

Revision	Date	Description	By

VERIFY SCALES
BAR IS ONE INCH ON ORIGINAL DRAWING
0 1"
IF NOT ONE INCH ON THIS SHEET, ADJUST SCALES ACCORDINGLY

Registered Professional Engineer
68430
PHANI KIRAN PEDDINTI
ARIZONA U.S.A.
Date Signed 02-23-2022

Sheet No. **E–1.06**

XREFS: XC–SITE; C–GRID; TB–WE–D; C–SITE; XE–SITE ELECT; E–SITE ELECT; SEAL–PKP; SIGN–PKP

G:\PROJECT\21007\CADD\DESIGN\ELECTRICAL\21007 E–1.06.DWG, 2/23/2022 12:45:13 PM, PPeddinti, 1:1

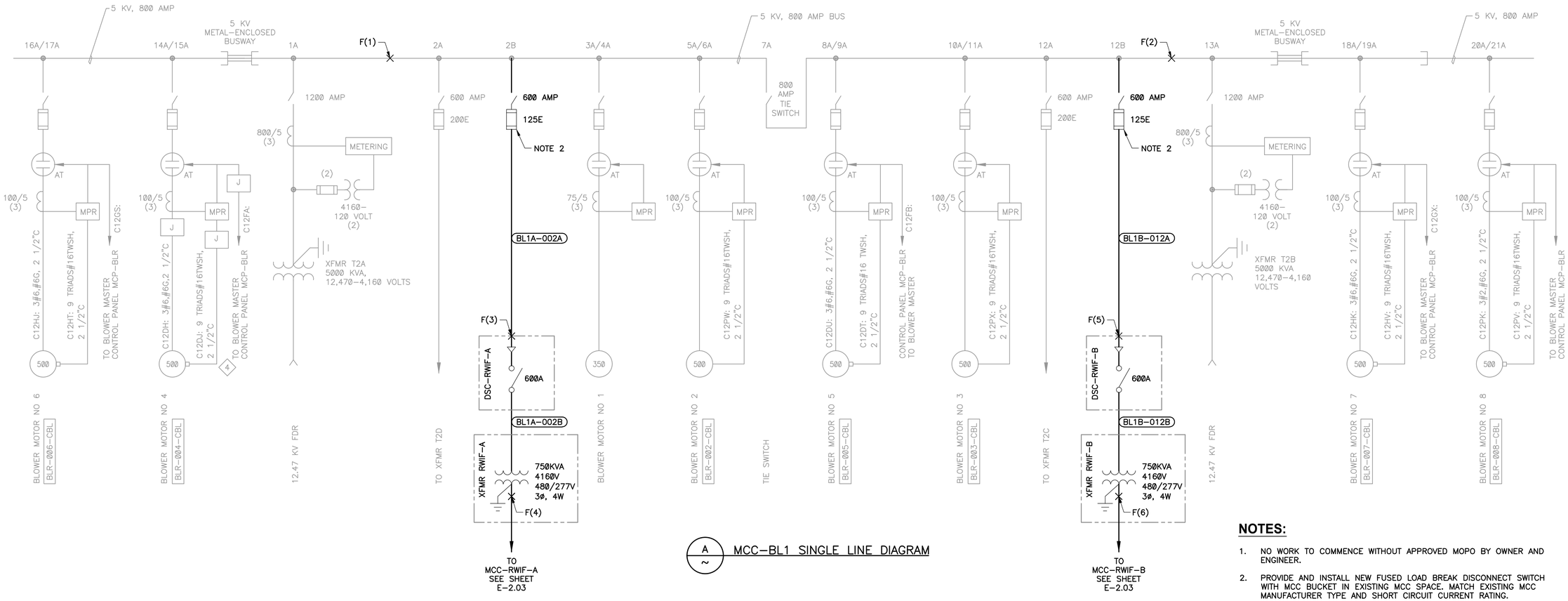

A ~ MCC-BL1 SINGLE LINE DIAGRAM

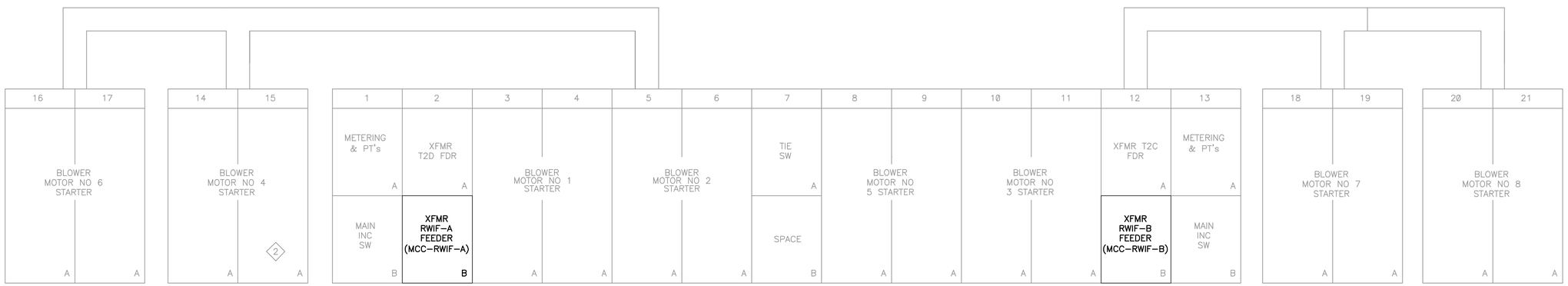

B ~ MCC-BL1 ELEVATION

NOTES:

1. NO WORK TO COMMENCE WITHOUT APPROVED MOPO BY OWNER AND ENGINEER.
2. PROVIDE AND INSTALL NEW FUSED LOAD BREAK DISCONNECT SWITCH WITH MCC BUCKET IN EXISTING MCC SPACE. MATCH EXISTING MCC MANUFACTURER TYPE AND SHORT CIRCUIT CURRENT RATING.
3. CIRCUIT BREAKER SETTINGS FOR MCC-BL1 SHALL BE ADJUSTED BASED ON AN APPROVED POWER SYSTEM STUDY.
4. SEE SHEETS E-3.01 AND E-3.02 FOR EQUIPMENT LOCATIONS.
5. SEE SHEET E-5.01 FOR POWER CONDUIT BOCK DIAGRAMS, WHICH SHOW THE SIZES AND QUANTITIES OF WIRES AND CONDUITS.
6. SEE SHEET E-2.02 FOR MCC-BL1 LOAD SUMMARY MODIFICATIONS.
7. SEE SHEET E-2.07 FOR SHORT CIRCUIT CURRENT CALCULATIONS.

1620 West Fountainhead Pkwy
Suite 501
Tempe, Arizona 85282
Phone: (480) 893-8860
Improving Arizona's Infrastructure Since 1942

WILSON ENGINEERS

CITY OF CHANDLER
RECLAIMED WATER INTERCONNECT FACILITY
EXISTING MCC-BL1 SINGLE LINE DIAGRAM MODIFICATIONS

CITY PROJECT NO. WW1901.203
WILSON PROJECT NO. 21007

Design: PKP
Drawn: ER
Checked: PKP
Date: 02/2022
Wilson Project No.: 21007

Revision	Date	Description	By

VERIFY SCALES
BAR IS ONE INCH ON ORIGINAL DRAWING
0 1"
IF NOT ONE INCH ON THIS SHEET, ADJUST SCALES ACCORDINGLY

Registered Professional Engineer
68430
PHANI KIRAN PEDDINTI
ELECTRICAL
DATE SIGNED 02-23-2022
ARIZONA U.S.A.

Sheet No. **E-2.01**

XREFS: TB-WE-D; SIGN-PKP; SEAL-PKP

G:\PROJECT\21007\CADD\DESIGN\ELECTRICAL\21007 E-2.01.DWG, 2/23/2022 12:56:07 PM, PPeddinti, 1:2.18867919

AGENCY REVIEW

LOAD SUMMARY

FAC/AREA (ZONE/SITE) Airport WRF
EQUIPMENT LOCATION: Blower Building Electrical Room
TAG NAME: MCC-BL1 (BUS A)
FED FROM: MAIN SWGR (VIA XFMR T2A)

MANUFACTURER: Eaton
VOLTS/PHASE/WIRE: 4160V/3PH/3W
MAIN BUS RATING: 800
MAIN BREAKER (AMPS): -
AIC RATING (AMPS): 65K
MAIN LUG ONLY: YES

SECTION NO.	TAG/CMMS NUMBER	BREAKER SIZE	STARTER SIZE	FEEDER CABLE SIZE	EQUIPMENT NAME	KVA	HP	FLA	BREAKER TRIP RATING	
2A		600A			XMFR T2D (MCC-BL2A)	773.2			200A	
2B		**600A**			**XFMR RWIF-A (MCC-RWIF-A)**	**750.0**			**125**	* NOTES 2, 3
3A/4A					BLOWER MOTOR NO. 1		350.0	43.0		
5A/6A					BLOWER MOTOR NO. 2		500.0	60.0		
14A/15A				#6 AWG	BLOWER MOTOR NO. 4		500.0	60.0		
16A/17A				#6 AWG	BLOWER MOTOR NO. 6		500.0	60.0		
SUBTOTAL OF FLA FOR NON-MOTOR LOADS (KVA):						1523.2		211.4		
SUBTOTAL OF FLA FOR MOTOR LOADS:								223.0		
PLUS 25% OF LARGEST MOTOR:								15.00		
TOTAL AMPS								449.4		
% LOADED (NO LARGER THAN 80% OF SELECTED LOAD SERVICE SIZE):								56.2%		

A ~ MCC-BL1 (BUS A) LOAD SUMMARY

LOAD SUMMARY

FAC/AREA (ZONE/SITE) Airport WRF
EQUIPMENT LOCATION: Blower Building Electrical Room
TAG NAME: MCC-BL1 (BUS B)
FED FROM: MAIN SWGR (VIA XFMR T2B)

MANUFACTURER: Eaton
VOLTS/PHASE/WIRE: 4160V/3PH/3W
MAIN BUS RATING: 800
MAIN BREAKER (AMPS): -
AIC RATING (AMPS): 65K
MAIN LUG ONLY: YES

SECTION NO.	TAG/CMMS NUMBER	BREAKER SIZE	STARTER SIZE	FEEDER CABLE SIZE	EQUIPMENT NAME	KVA	HP	FLA	BREAKER TRIP RATING	
7A		1200A			TIE SWITCH					
8A/9A					BLOWER MOTOR NO. 5		500.0	60.0		
10A/11A					BLOWER MOTOR NO. 3		500.0	60.0		
12A		600A			XMFR T2C (MCC-BL2B)	552.9			200A	
12B		**600A**			**XFMR RWIF-B (MCC-RWIF-B)**	**750.0**			**125**	* NOTES 2, 3
18A/19A				#6 AWG	BLOWER MOTOR NO. 7		500.0	60.0		
20A/21A					BLOWER MOTOR NO. 8		500.0	60.0		
SUBTOTAL OF FLA FOR NON-MOTOR LOADS (KVA):						1302.9		180.8		
SUBTOTAL OF FLA FOR MOTOR LOADS:								240.0		
PLUS 25% OF LARGEST MOTOR:								15.00		
TOTAL AMPS								435.8		
% LOADED (NO LARGER THAN 80% OF SELECTED LOAD SERVICE SIZE):								54.5%		

B ~ MCC-BL1 (BUS B) LOAD SUMMARY

NOTES:

1. NO WORK TO COMMENCE WITHOUT APPROVED MOPO BY OWNER AND ENGINEER.
2. PROVIDE AND INSTALL NEW FUSED LOAD BREAK DISCONNECT SWITCH WITH MCC BUCKET IN EXISTING MCC SPACE. MATCH EXISTING MCC MANUFACTURER TYPE AND SHORT CIRCUIT CURRENT RATING.
3. CIRCUIT BREAKER SETTINGS FOR MCC-BL1 SHALL BE ADJUSTED BASED ON AN APPROVED POWER SYSTEM STUDY.
4. SEE SHEETS E-3.01 AND E-3.02 FOR EQUIPMENT LOCATIONS.
5. SEE SHEET E-5.01 FOR POWER CONDUIT BOCK DIAGRAMS, WHICH SHOW THE SIZES AND QUANTITIES OF WIRES AND CONDUITS.
6. SEE SHEET E-2.01 FOR MCC-BL1 SINGLE LINE DIAGRAM MODIFICATIONS.

1620 West Fountainhead Pkwy
Suite 501
Tempe, Arizona 85282
Phone: (480) 893-8860
Improving Arizona's Infrastructure Since 1942

WILSON ENGINEERS

CITY OF CHANDLER
RECLAIMED WATER INTERCONNECT FACILITY

EXISTING MCC-BL1
LOAD SUMMARY - MODIFICATIONS

CITY PROJECT NO. WW1901.203
WILSON PROJECT NO. 21007

Design: PKP	Drawn: ER	Checked: PKP
Date: 02/2022	Wilson Project No.: 21007	

Revision	Date	Description	By

VERIFY SCALES
BAR IS ONE INCH ON ORIGINAL DRAWING
0 1"
IF NOT ONE INCH ON THIS SHEET, ADJUST SCALES ACCORDINGLY

68430
PHANI KIRAN PEDDINTI
REGISTERED PROFESSIONAL ENGINEER
DATE SIGNED 02-23-2022
ARIZONA U.S.A.

Sheet No. **E-2.02**

XREFS: TB-WE-D; SEAL-PKP; SIGN-PKP

G:\PROJECT\21007\CADD\DESIGN\ELECTRICAL\21007 E-2.02.DWG, 2/23/2022 12:45:20 PM, PPeddinti, 1:1

AGENCY REVIEW

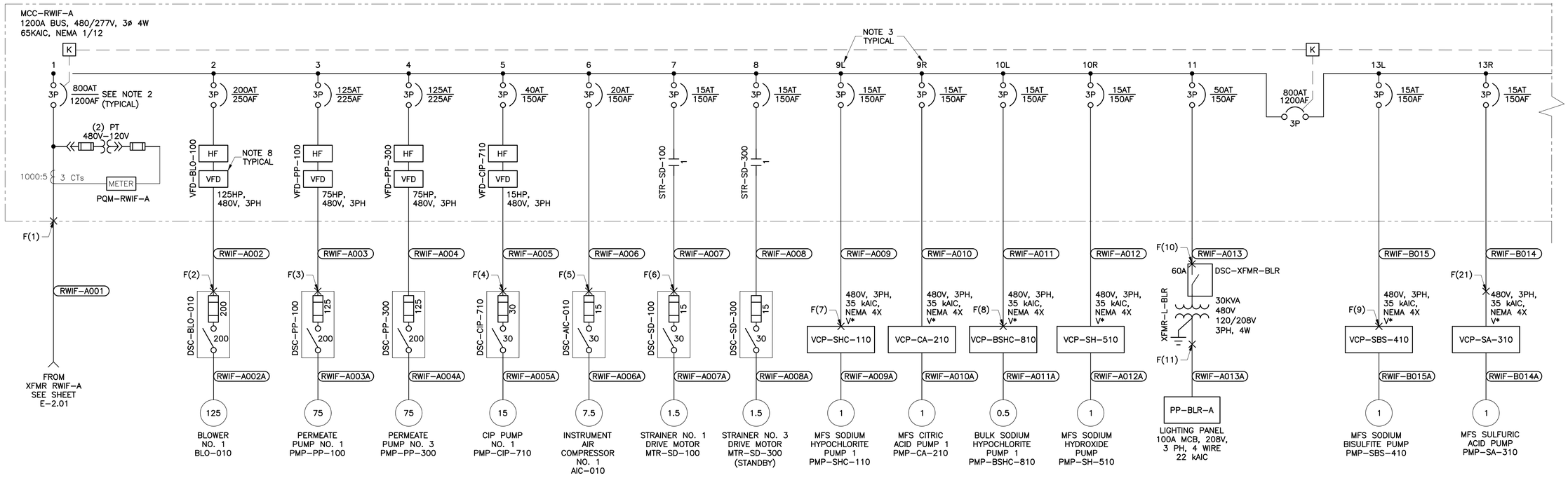

A ~ RECLAIMED WATER INTERCONNECT FACILITY MCC-RWIF-A

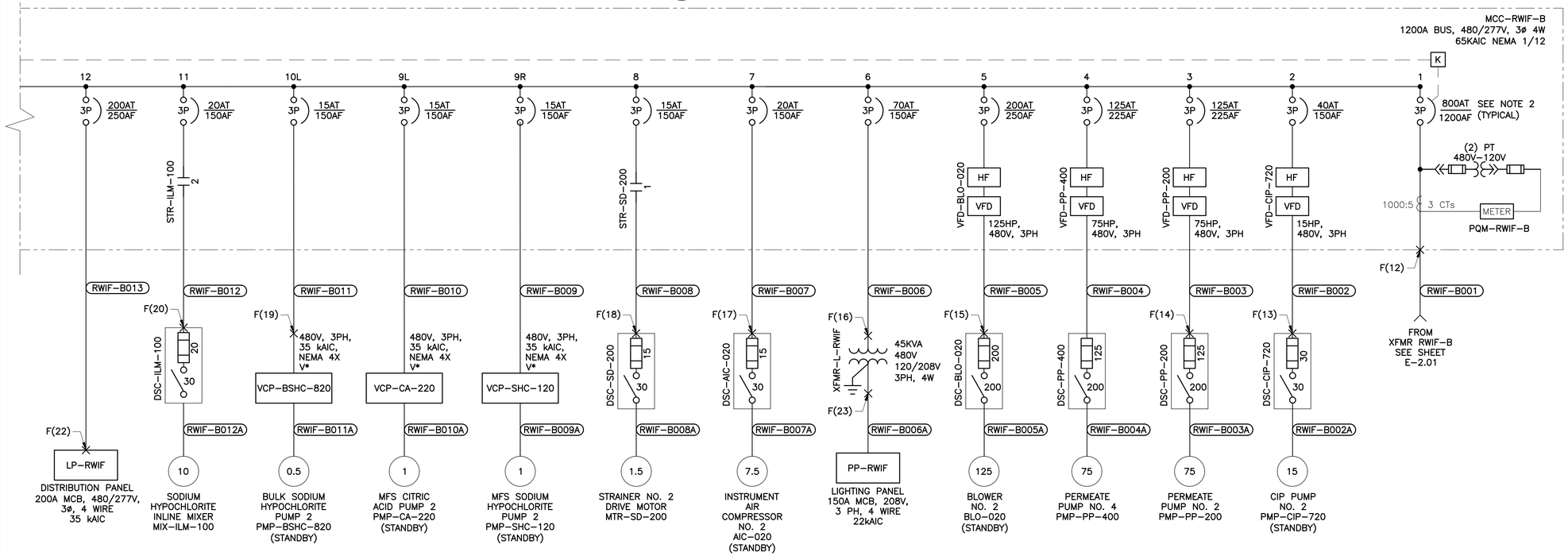

V* – VENDOR SUPPLIED

B ~ RECLAIMED WATER INTERCONNECT FACILITY MCC-RWIF-B

NOTES:

1. ALL SHORT CIRCUIT INTERRUPTING AND PROTECTION DEVICES SHALL HAVE A SHORT CIRCUIT RATING EQUAL TO OR GREATER THAN AVAILABLE SHORT CIRCUIT CURRENT ON THE BUS.
2. FOR THE MCC MAIN AND TIE BREAKERS PROVIDE A LSIG ADJUSTABLE MODULE AND ADJUSTABLE TRIP PLUG FEATURE. TRIP SETTINGS TO BE SET BY CONTRACTOR BASED ON APPROVED POWER STUDY.
3. FOR BREAKERS DENOTED WITH A "L" AND "R" SUFFIX, PROVIDE TANDEM BREAKERS IN ONE MCC BUCKET.
4. SEE SHEET E-2.04 FOR MCC-RWIF LOAD SUMMARIES, PP-RWIF AND PP-BLR-A PANEL SCHEDULES.
5. SEE SHEET E-2.05 FOR LP-RWIF PANEL SCHEDULE.
6. SEE SHEETS E-3.01 TO E-3.13 FOR LOCATIONS OF EQUIPMENT.
7. SEE SHEETS E-5.01 TO E-5.17 FOR POWER AND CONTROLS CONDUIT BOCK DIAGRAMS, WHICH SHOW THE SIZES AND QUANTITIES OF WIRES AND CONDUITS.
8. SEE SPECIFICATION 16485 FOR VFD AND HARMONIC FILTERING REQUIREMENTS.
9. SEE SHEET E-2.07 FOR SHORT CIRCUIT CURRENT CALCULATIONS.

1620 West Fountainhead Pkwy
Suite 501
Tempe, Arizona 85282
Phone: (480) 893-8860
Improving Arizona's Infrastructure Since 1942

WILSON ENGINEERS

CITY OF CHANDLER
RECLAIMED WATER INTERCONNECT FACILITY
MCC-RWIF SINGLE LINE DIAGRAM

CITY PROJECT NO. WW1901.203
WILSON PROJECT NO. 21007

Design: PKP	Drawn: ER	Checked: PKP
Date: 02/2022	Wilson Project No.: 21007	

Revision	Date	Description	By

VERIFY SCALES
BAR IS ONE INCH ON ORIGINAL DRAWING
0 1"
IF NOT ONE INCH ON THIS SHEET, ADJUST SCALES ACCORDINGLY

Registered Professional Engineer 68430 PHANI KIRAN PEDDINTI ARIZONA U.S.A.
DATE SIGNED 02/23/2022

Sheet No. **E-2.03**

XREFS: TB-WE-D; SEAL-PKP; SIGN-PKP

G:\PROJECT\21007\CADD\DESIGN\ELECTRICAL\21007 E-2.03.DWG, 2/23/2022 12:45:22 PM, PPeddinti, 1:1

AGENCY REVIEW

LOAD SUMMARY

FAC/AREA (ZONE/SITE): Airport WRF
EQUIPMENT LOCATION: RWIF Electrical Building
TAG NAME: MCC-RWIF-A
FED FROM: XFMR RWIF-A

MANUFACTURER: -
VOLTS/PHASE/WIRE: 480V/3PH/4W
MAIN BUS RATING: 1200
MAIN BREAKER (AMPS): 800
AIC RATING (AMPS): 65K
MAIN LUG ONLY: -

SECTION NO.	TAG/CMMS NUMBER	BREAKER SIZE	STARTER SIZE	FEEDER CABLE SIZE	EQUIPMENT NAME	KVA	HP	FLA	BREAKER TRIP RATING
1		1200A	-	-	MAIN			-	800A
2		250A	VFD	#3/0	BLOWER NO. 1 BL0-010		125.0	156.0	200A
3		225A	VFD	#1	PERMEATE PUMP NO. 1 PMP--PP-100		75.0	96.0	125A
4		225A	VFD	#1	PERMEATE PUMP NO. 3 PMP-PP-300		75.0	96.0	125A
5		150A	VFD	#6	CIP PUMP NO. 1 PMP-CIP-710		20.0	27.0	50A
6		150A	-	#6	INSTRUMENT AIR COMPRESSOR CMP-010		30.0	40.0	50A
7		150A	1	#12	STRAINER DRIVE NO. 1 MOTOR MTR-SD-100		1.5	3.0	15A
8		150A	1	#12	STRAINER DRIVE NO. 3 MOTOR MTR-SD-300 (STANDBY)		1.5	-	15A
9L		150A	1	#12	MFS SODIUM HYPOCHLORITE PUMP 1 PMP-SHC-110		1.0	2.1	15A
9R		150A	1	#12	MFS CITRIC ACID PUMP PUMP 1 PMP-CA-210		1.0	2.1	15A
10L		150A	1	#12	BULK SODIUM HYPOCHLORITE PUMP 1 PMP-BSHC-810		0.5	1.1	15A
10R		150A	1	#12	MFS SODIUM HYDROXIDE PUMP PMP-SH-510		1.0	2.1	15A
11		150A	-	#6	PP-BLR VIA XFMR-L-BLR-A	30		36.1	50A
-		1200A	-	-	TIE BREAKER			-	800A
SUBTOTAL OF FLA FOR NON-MOTOR LOADS (KVA):						30.0		36.1	
SUBTOTAL OF FLA FOR MOTOR LOADS:								425.4	
PLUS 25% OF LARGEST MOTOR:								39.00	
TOTAL AMPS								500.5	
% LOADED (NO LARGER THAN 80% OF SELECTED LOAD SERVICE SIZE):								62.6%	

A ~ MCC–RWIF (BUS A) LOAD SUMMARY

LOAD SUMMARY

FAC/AREA (ZONE/SITE): Airport WRF
EQUIPMENT LOCATION: RWIF Electrical Building
TAG NAME: MCC-RWIF-B
FED FROM: XFMR RWIF-B

MANUFACTURER: -
VOLTS/PHASE/WIRE 480V/3PH/4W
MAIN BUS RATING: 1200
MAIN BREAKER (AMPS): 800
AIC RATING (AMPS): 65K
MAIN LUG ONLY: -

SECTION NO.	TAG/CMMS NUMBER	BREAKER SIZE	STARTER SIZE	FEEDER CABLE SIZE	EQUIPMENT NAME	KVA	HP	FLA	BREAKER TRIP RATING
1		1200A	-	-	MAIN			-	800A
2		150A	VFD	#6	CIP PUMP NO. 2 PMP-CIP-720 (STANDBY)		20.0	-	50A
3		225A	VFD	#1	PERMEATE PUMP NO. 2 PMP--PP-200		75.0	96.0	125A
4		225A	VFD	#1	PERMEATE PUMP NO. 4 PMP--PP-400		75.0	96.0	125A
5		250A	VFD	#3/0	BLOWER NO. 2 BLO-020 (STANDBY)		125.0	-	200A
6		150A	-	#4	PP-RWIF VIA XFMR-L-RWIF	45		54.1	70A
7		150A	-	#6	INSTRUMENT AIR COMPRESSOR CMP-020 (STANDBY)		30.0	-	50A
8		150A	1	#12	STRAINER DRIVE NO. 2 MOTOR MTR-SD-200		1.5	3.0	15A
9R		150A	1	#12	MFS SODIUM HYPOCHLORITE PUMP 2 PMP-SHC-120 (STANDBY)		1.0	-	15A
9L		150A	1	#12	MFS CITRIC ACID PUMP 2 PMP-CA-220 (STANDBY)		1.0	-	15A
10L		150A	1	#12	BULK SODIUM HYPOCHLORITE PUMP 2 PMP-BSHC-820 (STANDBY)		0.5	-	15A
11		150A	2	#12	INLINE MIXER MIX-ILM-100		10.0	14.0	20A
12		250A	-	250kCMIL	DISTRIBUTION PANEL LP-RWIF	92.3		111.0	200A
13R		150A	1	#12	MFS SULFURIC ACID PUMP PMP-SA-310		1.00	2.1	15A
13L		150A	1	#12	MFS SODIUM BISULFITE PUMP PMP-SBS-410		1.0	2.1	15A
-		-	-	-	-			-	-
SUBTOTAL OF FLA FOR NON-MOTOR LOADS (KVA):						137.3		165.2	
SUBTOTAL OF FLA FOR MOTOR LOADS:								213.2	
PLUS 25% OF LARGEST MOTOR:								27.76	
TOTAL AMPS								406.1	
% LOADED (NO LARGER THAN 80% OF SELECTED LOAD SERVICE SIZE):								50.8%	

B ~ MCC–RWIF (BUS B) LOAD SUMMARY

NOTES:

1. ALL SHORT CIRCUIT INTERRUPTING AND PROTECTION DEVICES SHALL HAVE A SHORT CIRCUIT RATING EQUAL TO OR GREATER THAN AVAILABLE SHORT CIRCUIT CURRENT ON THE BUS.
2. FOR THE MCC MAIN AND TIE BREAKERS PROVIDE A LSIG ADJUSTABLE MODULE AND ADJUSTABLE TRIP PLUG FEATURE. TRIP SETTINGS TO BE SET BY CONTRACTOR BASED ON APPROVED POWER STUDY.
3. SEE SHEET E–2.03 FOR MCC–RWIF SINGLE LINE DIAGRAM.
4. SEE SHEETS E–3.01 TO E–3.13 FOR LOCATIONS OF EQUIPMENT.
5. SEE SHEETS E–5.01 TO E–5.17 FOR POWER AND CONTROLS CONDUIT BOCK DIAGRAMS, WHICH SHOW THE SIZES AND QUANTITIES OF WIRES AND CONDUITS.
6. SEE SPECIFICATION 16485 FOR VFD AND HARMONIC FILTERING REQUIREMENTS.
7. PROVIDE RED IDENTIFICATION FOR FIRE ALARM CIRCUIT BREAKER AND ALL REQUIREMENTS PER NEC SECTION 760.41.B OR 760.121.B.

LIGHTING DISTRIBUTION PANEL: PP-RWIF — **MANUFACTURER:** -

VOLTAGE, PHASE &WIRE: 208Y/120 VAC 3 Ø, 4W — **LOCATION:** RWIF ELECTRICAL BLDG
BUS SIZE: 225 AMPS — **ENCLOSURE:** NEMA 12
MAIN SIZE: 150 AMPS — **MOUNTING:** WALL
MAIN TYPE: YES MCCB — **BUS BRACING:** 22 KAIC
MAIN TYPE: YES BOLT-ON — **FED FROM:** MCC-RWIF-B (VIA XFMR-L-RWIF 45KVA)

	CKT NO.	LOAD DESCRIPTION	CKT. BKR. AMP	AMPS A	AMPS B	AMPS C	AMPS A	AMPS B	AMPS C	CKT. BKR. AMP	LOAD DESCRIPTION	CKT NO.
	1	PCP-001 MFS VENDOR CONTROL PANEL	40	28.0			1.5			20	ACU DEDICATED RECEPTACLE	2
	3	PLC-RWIF	20		5.0			6.0		20	RWIF ELECT BLDG INDOOR RECEPTS	4
NOTE 7 *	5	FACP-RWIF	20			5.0			6.0	20	RWIF ELECT BLDG OUTDOOR RECEPTS	6
	7	EDR-SD-101	20	5.8			0.8			20	RWIF ELECT BLDG OUTDOOR LIGHTS	8
	9	EDR-SD-201	20		5.8			2.5		20	RWIF ELECT BLDG INDOOR LIGHTS	10
	11	EDR-SD-301	20			5.8			1.0	20	RWIF ELECT BLDG EMERG/EXIT LIGHTS	12
	13	LIT-106	20	0.6			0.6			20	LIT-500	14
	15	LIT-206	20		0.6			0.6		20	FIT-510	16
	17	LIT-306	20			0.6			0.6	20	LIT-601	18
	19	LIT-406	20	0.6			0.6			20	FIT-732	20
	21	FIT-120	20		0.6			0.6		20	AIT-701	22
	23	FIT-220	20			0.6			0.6	20	AIT-702	24
	25	FIT-320	20	0.6			6.0			20	MFS RECEPTACLES	26
	27	FIT-420	20		0.6			6.0		20	MFS RECEPTACLES	28
	29	AIT-119	20			0.6			6.0	20	MFS RECEPTACLES	30
	31	AIT-219	20	0.6			0.6			20	WIT-ACH-600	32
	33	AIT-319	20		0.6			1.0		20	FIT-ACH-630	34
	35	AIT-419	20			0.6			1.0	20	LC-MFS-100	36
	37	SPARE	20	-			-			20	SPARE	38
	39	SPARE	20		-			-		20	SPARE	40
	41	SPARE	20			-			-	20	SPARE	42
				36.2	13.2	13.2	10.1	16.7	15.2			

NOTES:

KVA A PHASE= 6.9 — AMPS A PHASE= 57.8 — REV. 0
KVA B PHASE= 4.5 — AMPS B PHASE= 37.4 — BY: WE
KVA C PHASE= 4.3 — AMPS C PHASE= 35.5 — FEB 2022

TOTAL KVA = 15.7 (Load totals are calculated as continuous duty at 125%)

C ~ PP–RWIF PANEL SCHEDULE

LIGHTING DISTRIBUTION PANEL: PP-BLR-A — **MANUFACTURER:** -

VOLTAGE, PHASE &WIRE: 208Y/120 VAC 3 Ø, 4W — **LOCATION:** RWIF BLOWER BUILDING
BUS SIZE: 150 AMPS — **ENCLOSURE:** NEMA 12
MAIN SIZE: 100 AMPS — **MOUNTING:** WALL
MAIN TYPE: YES MCCB — **BUS BRACING:** 22 KAIC
MAIN TYPE: YES BOLT-ON — **FED FROM:** MCC-RWIF-A (VIA XFMR-L-BLR 30KVA)

	CKT NO.	LOAD DESCRIPTION	CKT. BKR. AMP	AMPS A	AMPS B	AMPS C	AMPS A	AMPS B	AMPS C	CKT. BKR. AMP	LOAD DESCRIPTION	CKT NO.
	1	BLOWER BLDG INDOOR LIGHTS	20	6.0			11.7			20	CHEMICAL FEED NaOCL LIGHTS	2
	3	BLOWER BLDG OUTDOOR LIGHTS	20		0.8			6.1		20	CHEMICAL FEED CA LIGHTS	4
	5	BLR BLDG EXIT SIGN/EMERGENCY LIGHTS	20			0.5			6.1	20	CHEMICAL FEED SBS LIGHTS	6
	7	ECU DEDICATED RECEPTACLE	20	1.5			6.1			20	CHEMICAL FEED NaOH LIGHTS	8
	9	BLOWER BLDG INDOOR RECEPTACLES	20		7.5			3.0		20	CHEMICAL FEED FACILITY RECEPTS	10
	11	BLOWER BLDG OUTDOOR RECEPTACLES	20			6.0			4.5	20	CHEMICAL FEED FACILITY RECEPTS	12
	13	FIT-030	20	0.6			0.6			20	WIT-CA-200	14
	15	FIT-SHC-130	20		0.6			0.6		20	WIT-SA-300	16
	17	LCP-SHC-001	20			1.0			0.6	20	WIT-SBS-400	18
	19	FIT-CA-230	20	0.6			0.6			20	WIT-SH-500	20
	21	EDR-SHC-007	20		5.8			-		20	SPARE	22
	23	FIT-SA-330	20			0.6			1.0	20	LC-CFF-100	24
	25	FIT-SBS-430	20	0.6			-			20	SPARE	26
	27	FIT-SH-530	20		0.6			-		20	SPARE	28
NOTE 7 *	29	FACP-BLR	20			5.0			-	20	SPARE	30
	31	SPARE	20	-			-			20	SPARE	32
	33	SPARE	20		-			-		20	SPARE	34
	35	SPARE	20			-			-	20	SPARE	36
	37	SPACE	-	-			-			-	SPACE	38
	39	SPACE	-		-			-		-	SPACE	40
	41	SPACE	-			-			-	-	SPACE	42
				9.3	15.3	13.1	19.0	9.7	12.2			

NOTES:

KVA A PHASE= 4.2 — AMPS A PHASE= 35.3 — REV. 0
KVA B PHASE= 3.7 — AMPS B PHASE= 31.2 — BY: WE
KVA C PHASE= 3.8 — AMPS C PHASE= 31.6 — JAN 2022

TOTAL KVA = 11.8 (Load totals are calculated as continuous duty at 125%)

D ~ PP–BLR–A PANEL SCHEDULE

1620 West Fountainhead Pkwy
Suite 501
Tempe, Arizona 85282
Phone: (480) 893-8860
Improving Arizona's Infrastructure Since 1942

WILSON ENGINEERS

CITY OF CHANDLER
RECLAIMED WATER INTERCONNECT FACILITY

MCC–RWIF LOAD SUMMARIES AND PANEL SCHEDULES

CITY PROJECT NO. WW1901.203
WILSON PROJECT NO. 21007

Revision	Date	Description	By

Design: PKP
Drawn: ER
Checked: PKP
Date: 02/2022
Wilson Project No.: 21007

VERIFY SCALES
BAR IS ONE INCH ON ORIGINAL DRAWING
0 1"
IF NOT ONE INCH ON THIS SHEET, ADJUST SCALES ACCORDINGLY



Sheet No. E–2.04

AGENCY REVIEW

XREFS: TB-WE-D; SEAL-PKP; SIGN-PKP

G:\PROJECT\21007\CADD\DESIGN\ELECTRICAL\21007 E-2.04.DWG, 2/23/2022 12:45:29 PM, PPeddinti, 1:1

POWER DISTRIBUTION PANEL: LP-RWIF **MANUFACTURE:** -

VOLTAGE, PHASE &WIRE: 277/480 VAC 3 Ø, 4W **LOCATION:** RWIF ELECTRICAL BLDG
BUS SIZE: 250 AMPS **ENCLOSURE:** NEMA -12
MAIN SIZE: 200 AMPS **MOUNTING:** WALL
MAIN TYPE: YES CIRCUIT BREAKER **BUS BRACING:** 35 KAIC
MAIN TYPE: YES BOLT-ON **FED FROM:** MCC-RWIF-B

CKT NO.	LOAD DESCRIPTION	AMP	AMP A	AMP B	AMP C	AMP A	AMP B	AMP C	AMP	LOAD DESCRIPTION	CKT NO.
1	ACU-100 RWIF ELECTRICAL BUILDING AC UNIT	50/3	40.0			16.2			30/3	ECU-100 BLOWER BUILDING COOLING UNIT	2
3				40.0			16.2				4
5					40.0			16.2			6
7	RWIF MFS AREA LIGHTS	20	9.9			15.0			20/3	VCP-SDBW-110	8
9	RWIF MFS AREA LIGHTS	20		9.9			15.0				10
11	RWIF MFS AREA LIGHTS	20			9.9			15.0			12
13	VCP-SDBW-210	20/3	15.0			15.0			20/3	VCP-SDBW-310 (STANDBY)	14
15				15.0			15.0				16
17					15.0			15.0			18
19	VCP-ACH-610	20/3	1.1			1.1			20/3	VCP-ACH-620 (STANDBY)	20
21				1.1			1.1				22
23					1.1			1.1			24
25	SPARE	20/3	-			-			20	SPARE	26
27				-			-		20	SPARE	28
29					-			-	20	SPARE	30
31	SPARE	20/3	-			-			20/3	SPARE	32
33				-			-				34
35					-			-			36
37	SPACE	-	-			-			-	SPACE	38
39				-			-				40
41					-			-			42
			66.0	66.0	66.0	47.3	47.3	47.3			

NOTES:

KVA A PHASE= 39.2 AMPS A PHASE= 141.6
KVA B PHASE= 39.2 AMPS B PHASE= 141.6
KVA C PHASE= 39.2 AMPS C PHASE= 141.6

TOTAL KVA = 117.7 (Load totals are calculated as continuous duty at 125%)

A ~ LP–RWIF PANEL SCHEDULE

LIGHTING DISTRIBUTION PANEL: PP-AD4 **MANUFACTURER:**

VOLTAGE, PHASE &WIRE: 120 / 240 VAC 1 Ø, 3W **LOCATION:** ADMIN BLDG ELECTRICAL ROOM
BUS SIZE: 100 AMPS **ENCLOSURE:** -
MAIN SIZE: 100 AMPS **MOUNTING:** WALL
MAIN TYPE: YES CIRCUIT BEAKER **BUS BRACING:** -
MAIN TYPE: YES BOLT-ON **FED FROM:** MCC-AD VIA XFMR

	CKT NO.	LOAD DESCRIPTION	CKT. BKR. AMP	AMPS A	AMPS B	AMPS A	AMPS B	CKT. BKR. AMP	LOAD DESCRIPTION	CKT NO.
	1	I/O ADM UPS RECEPT.	20	-		-		20	WIT-062	2
	3	I/O ADM	20		-		-	20	SPARE	4
	5	RAP. MIX/FLOC BASIN	20	-		-		20	SPARE	6
	7	FCC/RM	20		-		-	20	I/O ADM 1	8
	9	LCP-RW/FLO	20	-		-		20	LCP-FBH	10
	11	LCP-RW/FLO	20		-		-	20	FIT/FQI 216	12
	13	RM-001-PF RECEPT	20	-		-		20	LIT-216	14
	15	HYDROPNEUMATIC TANK	20		-		-	40	RANGE AB	16
	17	CATHODIC PANEL AB	20	-		-		20	RANGE	18
	19	FIREBELL	20		-		-	20	FQIT	20
NOTE 4 *	21	**COMPOSITE SAMPLER (CCB-002-SLP)**	20	4.0		-		20	CCB LIGHTS	22
	23	CCB-01-SMP1	20		-		-	20	I/O ADMIN NEW	24
NOTE 4 *	25	**CCB-01-SMP2**	20	8.6		-		20	CCB RECEPTS	26
	27	AIT (605) ECP-CCB-SMP	20		-		-	20	SPARE	28
	29	I/O ADM 2	20	-		-		20	I/O ADM	30
	31	SPARE	20		-		-	20	SPARE	32
	33	SPARE	20	-		-		20	SPARE	34
	35	SPARE	20		-		-	20	SPARE	36
	37	SPARE	20	-		-		20	SPARE	38
	39	SPARE	20		-			100/2	MAIN	40
	41	SPARE	20	-						42

NOTES:

KVA A PHASE= 1.9 AMPS A PHASE= 15.8
KVA B PHASE= 0.0 AMPS B PHASE= 0.0

TOTAL KVA = 1.9 (Load totals are calculated as continuous duty at 125%)

B ~ EXISTING PP–AD4 PANEL SCHEDULE – MODIFICATIONS
NOTE 6

LIGHTING DISTRIBUTION PANEL: PP-EFF **MANUFACTURER:**

VOLTAGE, PHASE &WIRE: 120 / 240 VAC 1 Ø, 3W **LOCATION:** EFF PUMP STATION CONTROL ROOM
BUS SIZE: 100 AMPS **ENCLOSURE:** -
MAIN SIZE: 40 AMPS **MOUNTING:** WALL
MAIN TYPE: YES CIRCUIT BEAKER **BUS BRACING:** -
MAIN TYPE: YES BOLT-ON **FED FROM:** LP-EFF

CKT NO.	LOAD DESCRIPTION	CKT. BKR. AMP	AMPS A	AMPS B	AMPS A	AMPS B	CKT. BKR. AMP	LOAD DESCRIPTION	CKT NO.	
1	UPS	20	-		-		20	INTERIOR RECEPT	2	
3	LCP-EPS	20		-		-	20	EXTERIOR RECEPT	4	
5	FIT-ESP-001	20	-		-		20	ATKIN BLDG LIGHTS	6	
7	SPARE	20		-		-	20	LIT-122	8	
9	LCP-NPOT	20	-		-		20	FA CP	10	
11	AIT-135 TURBIDITY	20		-		-	20	EPS-LIGHTS	12	
13	ATKIN BLDG LIGHTS	20	-		4.0		20	**COMPOSITE SAMPLER (CCB-003-SLP)**	14	* NOTE 5
15	SPARE	20		-		8.6	20	**NEW CCB-003-SMP**	16	* NOTE 5
17	ATKIN BLDG LIGHTS	20	-		-		20	FA	18	
19	EFF-FIT-002	20		-		-	20	RECEPT	20	
21	SPACE	-	-		-		20	LTG	22	
23	SPACE	-		-		-	20	I/O	24	
25	SPACE	-	-		-		20	I/O	26	
27	SPACE	-		-		-	-	SPACE	28	
29	SPACE	-	-		-		-	SPACE	30	
31	SPACE	-		-		-	-	SPACE	32	
33	SPACE	-	-		-		-	SPACE	34	
35	SPACE	-		-		-	-	SPACE	36	
37	SPACE	-	-		-		-	SPACE	38	
39	SPACE	-		-			-	SPACE	40	
41	SPACE	-	-				-	SPACE	42	

NOTES:

KVA A PHASE= 0.6 AMPS A PHASE= 5.0
KVA B PHASE= 1.3 AMPS B PHASE= 10.8

TOTAL KVA = 1.9 (Load totals are calculated as continuous duty at 125%)

C ~ EXISTING PP–EFF PANEL SCHEDULE – MODIFICATIONS
NOTE 3

NOTES:

1. NO WORK TO COMMENCE WITHOUT APPROVED MOPO.
2. ALL SHORT CIRCUIT INTERRUPTING AND PROTECTION DEVICES SHALL HAVE A SHORT CIRCUIT RATING EQUAL TO OR GREATER THAN AVAILABLE SHORT CIRCUIT CURRENT ON THE BUS.
3. THE TOTAL CONNECTED LOAD FOR PP–EFF IS NOT AVAILABLE, CONTRACTOR SHALL METER THE LIGHTING PANEL IN ADVANCE TO VERIFY THE ACTUAL TOTAL CONNECTED LOAD AND PROVIDE THE RESULTS TO ENGINEER PRIOR TO ANY ELECTRICAL WORKS.
4. EXISTING SAMPLE PUMP CCB–01–SMP2 AND COMPOSITE SAMPLER CCB–002–SLP TO BE RELOCATED. REPLACE FEEDER CONDUCTORS AND EXTEND CONDUITS AS NECESSARY.
5. FURNISH NEW 20A–1P CIRCUIT BREAKERS TO FEED THE NEW SAMPLE PUMP CCB–003–SMP AND COMPOSITE SAMPLER CCB–003–SLP. MATCH EXISTING BREAKER MANUFACTURER'S TYPE AND AIC RATING. UPDATE PANEL SCHEDULE AS REQUIRED. CIRCUITS TO BE CONFIRMED BY THE ENGINEER AFTER THE CONTRACTOR PROVIDED THE METERING RESULTS OF THE EXISTING PANEL.
6. NO ADDITIONAL LOADS WERE ADDED ON THE EXISTING PP–AD4 LIGHTING PANEL.
7. SEE SHEETS E–3.01 TO E–3.14 FOR LOCATIONS OF EQUIPMENT.
8. SEE SHEETS E–5.01 THRU E–5.17 FOR POWER AND CONTROLS CONDUIT BLOCK DIAGRAMS.

1620 West Fountainhead Pkwy
Suite 501
Tempe, Arizona 85282
Phone: (480) 893–8860
Improving Arizona's Infrastructure Since 1942

WILSON ENGINEERS

CITY OF CHANDLER
RECLAIMED WATER INTERCONNECT FACILITY

LP–RWIF, PP–AD4 AND PP–EFF PANEL SCHEDULES

CITY PROJECT NO. WW1901.203
WILSON PROJECT NO. 21007

Design: PKP	Drawn: ER	Checked: PKP
Date: 02/2022	Wilson Project No.: 21007	

Revision	Date	Description	By

VERIFY SCALES
BAR IS ONE INCH ON ORIGINAL DRAWING
0 1"
IF NOT ONE INCH ON THIS SHEET, ADJUST SCALES ACCORDINGLY

Professional Engineer Certificate No. 68430 PHANI KIRAN PEDDINTI STATE OF ARIZONA U.S.A. Date Signed 02-23-2022

Sheet No. **E–2.05**

AGENCY REVIEW

XREFS: TB-WE-D; SEAL-PKP; SIGN-PKP

G:\PROJECT\21007\CADD\DESIGN\ELECTRICAL\21007 E–2.05.DWG, 2/23/2022 12:45:38 PM, PPeddinti, 1:1

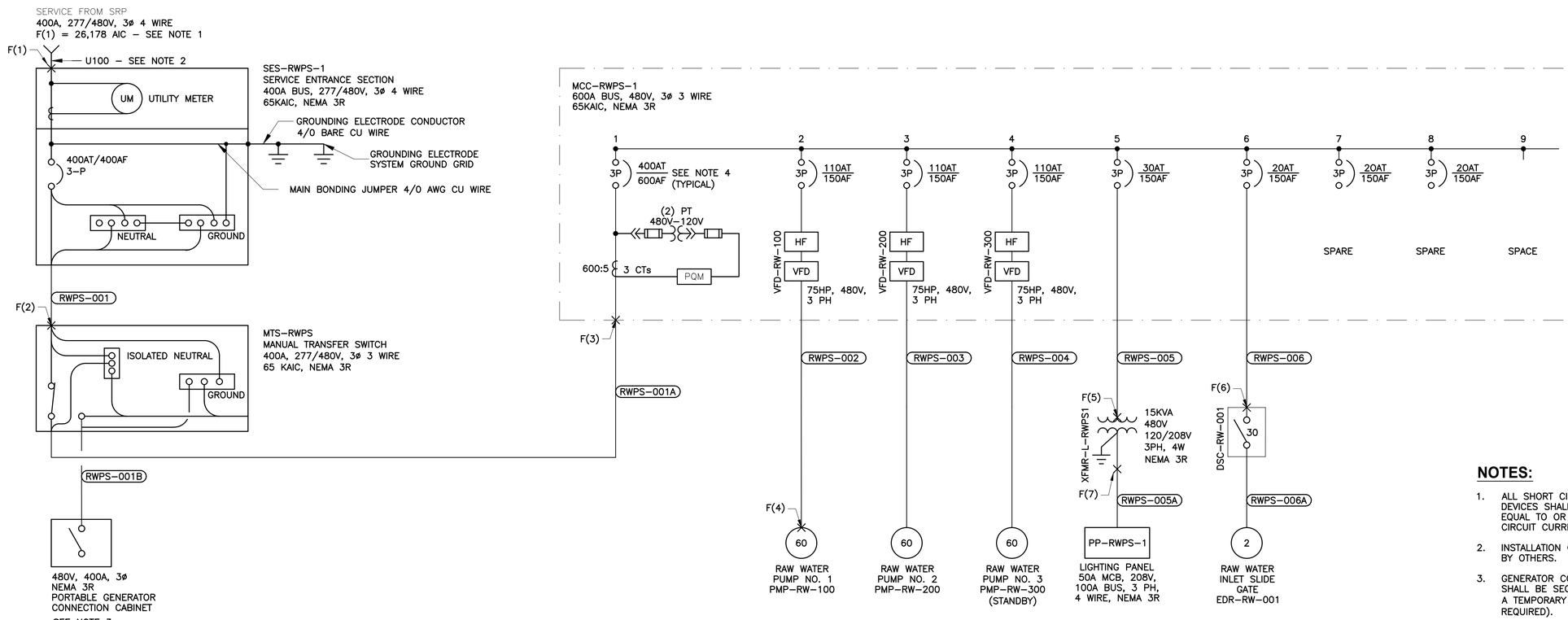

A SRP CANAL RWPS MCC–RWPS–1

NOTES:

1. ALL SHORT CIRCUIT INTERRUPTING AND PROTECTION DEVICES SHALL HAVE A SHORT CIRCUIT RATING EQUAL TO OR GREATER THAN AVAILABLE SHORT CIRCUIT CURRENT ON THE BUS.
2. INSTALLATION OF CONDUCTORS TO SES SHALL BE BY OTHERS.
3. GENERATOR CONNECTION CABINET TERMINALS SHALL BE SECURELY CAPPED FOR CONNECTION TO A TEMPORARY GENERATOR (BY OTHERS, WHEN REQUIRED).
4. CIRCUIT BREAKER TRIP SETTINGS TO BE SET BY CONTRACTOR BASED ON APPROVED POWER STUDY.
5. SEE SHEET E–3.15 FOR LOCATIONS OF EQUIPMENT.
6. SEE SHEETS E–5.05 AND E–5.17 FOR POWER AND CONTROLS CONDUIT BLOCK DIAGRAMS.
7. SEE SHEET E–2.07 FOR SHORT CIRCUIT CURRENT CALCULATIONS.

LOAD SUMMARY

FAC/AREA (ZONE/SITE): Airport WRF
EQUIPMENT LOCATION: SRP Raw Water PS Canopy
TAG NAME: MCC-RWPS-1
FED FROM: SES-RWPS-1 VIA MTS-RWPS

MANUFACTURER: -
VOLTS/PHASE/WIRE: 480V/3PH/3W
MAIN BUS RATING: 600
MAIN BREAKER (AMPS): 400
AIC RATING (AMPS): 65K
MAIN LUG ONLY: -

SECTION NO.	TAG/CMMS NUMBER	BREAKER SIZE	STARTER SIZE	FEEDER CABLE SIZE	EQUIPMENT NAME	KVA	HP	FLA	BREAKER TRIP RATING
1		600A	-	-	MAIN			-	400A
2		150A	VFD	#1	RAW WATER PUMP NO. 1 PMP-RW-100		60.0	77.0	110A
3		150A	VFD	#1	RAW WATER PUMP NO. 2 PMP-RW-200		60.0	77.0	110A
4		150A	VFD	#1	RAW WATER PUMP NO. 3 PMP-RW-300 (STANDBY)		60.0	-	110A
5		150A	-	#10	PP-RWPS-1 VIA XFMR-L-RWPS1	15		18.0	30A
6		150A	-	#12	EDR-RW-001		2.0	3.4	20A
7		150A	-		SPARE			-	20A
8		150A	-		SPARE			-	20A
SUBTOTAL OF FLA FOR NON-MOTOR LOADS (KVA):						15.0		18.0	
SUBTOTAL OF FLA FOR MOTOR LOADS:								157.4	
PLUS 25% OF LARGEST MOTOR:								19.25	
TOTAL AMPS								194.7	
% LOADED (OF SERVICE SIZE):								48.7%	

B MCC–RWPS–1 LOAD SUMMARY

LIGHTING DISTRIBUTION PANEL: PP-RWPS-1 — **MANUFACTURER:** -

VOLTAGE, PHASE & WIRE: 208Y/120 VAC 3 Ø, 4W — **LOCATION:** SRP CANAL RW PUMP STATION
BUS SIZE: 100 AMPS — **ENCLOSURE:** NEMA 12
MAIN SIZE: 50 AMPS — **MOUNTING:** WALL
MAIN TYPE: YES MCCB — **BUS BRACING:** 22 KAIC
MAIN TYPE: YES BOLT-ON — **FED FROM:** MCC-RWPS-1 (VIA XFMR-L-RWPS1 15KVA)

CKT NO.	LOAD DESCRIPTION	CKT. BKR. AMP	AMPS A	AMPS B	AMPS C	AMPS A	AMPS B	AMPS C	CKT. BKR. AMP	LOAD DESCRIPTION	CKT NO.
1	AIT-RW-002	20	0.6			3.8			20	RW PUMP STATION LIGHTS	2
3	LIT-RW-003	20		0.6			4.5		20	RW PUMP STATION RECEPTACLES	4
5	LCP-RW-008	20			0.6			6.0	20	RW PUMP STATION RECEPTACLES	6
7	FIT-RW-012	20	0.6			1.5			20	RW PUMP STATION CANOPY LIGHTS	8
9	RW PUMP STATION GATE OPERATOR	20		5.0			0.0		20	SPARE	10
11	SPARE	20			0.0			0.0	20	SPARE	12
13	SPACE	-	-			-			-	SPACE	14
15	SPACE	-		-			-		-	SPACE	16
17	SPACE	-			-			-	-	SPACE	18
			1.2	5.6	0.6	5.3	4.5	6.0			

NOTES:

KVA A PHASE= 1.0 — AMPS A PHASE= 8.1 — REV. 0
KVA B PHASE= 1.5 — AMPS B PHASE= 12.6 — BY: WE
KVA C PHASE= 1.0 — AMPS C PHASE= 8.3 — JAN 2022
TOTAL KVA = 3.5 (Load totals are calculated as continuous duty at 125%)

C PP–RWPS–1 PANEL SCHEDULE

1620 West Fountainhead Pkwy
Suite 501
Tempe, Arizona 85282
Phone: (480) 893-8860
Improving Arizona's Infrastructure Since 1942
WILSON ENGINEERS

CITY OF CHANDLER
RECLAIMED WATER INTERCONNECT FACILITY

MCC–RWPS–1
SINGLE LINE DIAGRAM
CITY PROJECT NO. WW1901.203
WILSON PROJECT NO. 21007

Design: PKP	Drawn: ER	Checked: PKP
Date: 02/2022	Wilson Project No.: 21007	

Revision	Date	Description	By

VERIFY SCALES
BAR IS ONE INCH ON ORIGINAL DRAWING
0 1"
IF NOT ONE INCH ON THIS SHEET, ADJUST SCALES ACCORDINGLY

Professional Engineer — 68430 — PHANI KIRAN PEDDINTI — ARIZONA U.S.A. — SIGNED 02-23-2022

Sheet No. **E–2.06**

XREFS: TB–WE–D; SEAL–PKP; SIGN–PKP

G:\PROJECT\21007\CADD\DESIGN\ELECTRICAL\21007 E–2.06.DWG, 2/23/2022 12:45:46 PM, PPeddinti, 1:1

AGENCY REVIEW

NOTES:

1. ALL SHORT CIRCUIT INTERRUPTING AND PROTECTION DEVICES SHALL HAVE A SHORT CIRCUIT RATING EQUAL TO OR GREATER THAN AVAILABLE SHORT CIRCUIT CURRENT ON THE BUS.
2. SEE SHEET E-2.01 FOR MCC-BL1 SINGLE LINE DIAGRAM.
3. SEE SHEET E-2.03 FOR MCC-RWIF SINGLE LINE DIAGRAM.
4. SEE SHEET E-2.06 FOR MCC-RWPS11 SINGLE LINE DIAGRAM.

MCC-BL1-A
AVAILABLE FAULT CURRENT FROM OCT 2014 POWER SYSTEM STUDY
F (1) = 8,050

MCC-BL1-B
AVAILABLE FAULT CURRENT FROM OCT 2014 POWER SYSTEM STUDY
F (2) = 7,720

DSC-RWIF-A

$F = \frac{1.732 \times 1000 \times 8,050}{1 \times 8590 \times 4160} = 0.3902$

$M = \frac{1}{1 + 0.3902} = 0.7193$

MC= 0 X 4 = 0

F (3) = 8,050 X 0.7193 + 0.0 = **5,790**

XFMR-RWIF-A (SECONDARY)

$F = \frac{5,790 \times 4160 \times 1.73 \times 5.75}{100,000 \times 750} = 3.1949$

$M = \frac{1}{1 + 3.1949} = 0.23838$

F (4) = $\frac{4160}{480}$ x 0.2383847 x 5,790 = **11,963**

DSC-RWIF-B

$F = \frac{1.732 \times 1000 \times 7,720}{1 \times 8590 \times 4160} = 0.3742$

$M = \frac{1}{1 + 0.3742} = 0.7277$

MC= 0 X 4 = 0

F (5) = 7,720 X 0.7277 + 0.0 = **5,618**

XFMR-RWIF-B (SECONDARY)

$F = \frac{5,618 \times 4160 \times 1.73 \times 5.75}{100,000 \times 750} = 3.0997$

$M = \frac{1}{1 + 3.0997} = 0.24392$

F (6) = $\frac{4160}{480}$ x 0.2439203 x 5,618 = **11,876**

A ~ 4160V MCC-BL1 FAULT CURRENT CALCULATIONS

MCC-RWIF-A

$F = \frac{1.732 \times 30 \times 11,963}{3 \times 26706 \times 480} = 0.0162$

$M = \frac{1}{1 + 0.0162} = 0.9841$

MC= 11 X 4 = 44

F (1) = 11,963 X 0.9841 + 44.0 = **11,817**

DSC-BLO-010

$F = \frac{1.732 \times 250 \times 11,817}{1 \times 13923 \times 480} = 0.7656$

$M = \frac{1}{1 + 0.7656} = 0.5664$

MC= 156 X 4 = 624

F (2) = 11,817 X 0.5664 + 624.0 = **7,317**

DSC-PP-100 (DSC-PP-300)

$F = \frac{1.732 \times 175 \times 11,817}{1 \times 7493 \times 480} = 0.9958$

$M = \frac{1}{1 + 0.9958} = 0.5011$

MC= 96 X 4 = 384

F (3) = 11,817 X 0.5011 + 384.0 = **6,305**

DSC-CIP-710

$F = \frac{1.732 \times 175 \times 11,817}{1 \times 2430 \times 480} = 3.0707$

$M = \frac{1}{1 + 3.0707} = 0.2457$

MC= 21 X 4 = 84

F (4) = 11,817 X 0.2457 + 84.0 = **2,987**

DSC-AIC-010

$F = \frac{1.732 \times 250 \times 2,987}{1 \times 2430 \times 480} = 1.109$

$M = \frac{1}{1 + 1.109} = 0.4742$

MC= 11 X 4 = 44

F (5) = 2,987 X 0.4742 + 44.0 = **1,461**

DSC-SD-100

$F = \frac{1.732 \times 150 \times 11,817}{1 \times 617 \times 480} = 10.3659$

$M = \frac{1}{1 + 10.3659} = 0.088$

MC= 3 X 4 = 12

F (6) = 11,817 X 0.088 + 12.0 = **1,052**

VCP-SHC-110

$F = \frac{1.732 \times 200 \times 11,817}{1 \times 617 \times 480} = 13.8212$

$M = \frac{1}{1 + 13.8212} = 0.0675$

MC= 2.1 X 4 = 8.4

F (7) = 11,817 X 0.0675 + 8.4 = **806**

VCP-BSHC-810

$F = \frac{1.732 \times 300 \times 11,817}{1 \times 617 \times 480} = 20.7319$

$M = \frac{1}{1 + 20.7319} = 0.046$

MC= 1.1 X 4 = 4.4

F (8) = 11,817 X 0.046 + 4.4 = **548**

VCP-SBS-410

$F = \frac{1.732 \times 200 \times 11,817}{1 \times 617 \times 480} = 13.8212$

$M = \frac{1}{1 + 13.8212} = 0.0675$

MC= 2.1 X 4 = 8.4

F (9) = 11,817 X 0.0675 + 8.4 = **806**

DSC-XFMR-BLR

$F = \frac{1.732 \times 250 \times 11,817}{1 \times 2430 \times 480} = 4.3867$

$M = \frac{1}{1 + 4.3867} = 0.1856$

MC= 0 X 4 = 0

F (10) = 11,817 X 0.1856 + 0.0 = **2,193**

XFMR-L-BLR SECONDARY

$F = \frac{2,193 \times 830.4 \times 1.00}{100,000 \times 30} = 0.6071$

$M = \frac{1}{1 + 0.6071} = 0.6222$

F (-11) = $\frac{480}{208}$ x 0.6222 x 2,193 = **3,149**

MCC-RWIF-B

$F = \frac{1.732 \times 30 \times 11,876}{3 \times 26706 \times 480} = 0.016$

$M = \frac{1}{1 + 0.016} = 0.9843$

MC= 14 X 4 = 56

F (12) = 11,876 X 0.9843 + 56.0 = **11,746**

DSC-CIP-720

$F = \frac{1.732 \times 175 \times 11,746}{1 \times 2430 \times 480} = 3.0522$

$M = \frac{1}{1 + 3.0522} = 0.2468$

MC= 21 X 4 = 84

F (13) = 11,746 X 0.2468 + 84.0 = **2,983**

DSC-PP-200

$F = \frac{1.732 \times 175 \times 11,746}{1 \times 7493 \times 480} = 0.9898$

$M = \frac{1}{1 + 0.9898} = 0.5026$

MC= 96 X 4 = 384

F (14) = 11,746 X 0.5026 + 384.0 = **6,287**

DSC-BLO-020

$F = \frac{1.732 \times 250 \times 11,746}{1 \times 13923 \times 480} = 0.761$

$M = \frac{1}{1 + 0.761} = 0.5679$

MC= 156 X 4 = 624

F (15) = 11,746 X 0.5679 + 624.0 = **7,294**

XFMR-L-RWIF (PRIMARY)

$F = \frac{11,746 \times 830.4 \times 1.50}{100,000 \times 45} = 3.2512$

$M = \frac{1}{1 + 3.2512} = 0.2352$

F (16) = $\frac{480}{208}$ x 0.2352 x 11,746 = **6,375**

DSC-AIC-020

$F = \frac{1.732 \times 250 \times 11,746}{1 \times 2430 \times 480} = 4.3603$

$M = \frac{1}{1 + 4.3603} = 0.1866$

MC= 11 X 4 = 44

F (-17) = 11,746 X 0.1866 + 44.0 = **2,236**

DSC-SD-200

$F = \frac{1.732 \times 150 \times 11,746}{1 \times 617 \times 480} = 10.3035$

$M = \frac{1}{1 + 10.3035} = 0.0885$

MC= 3 X 4 = 12

F (18) = 11,746 X 0.0885 + 12.0 = **1,051**

VCP-BSHC-820

$F = \frac{1.732 \times 300 \times 11,746}{1 \times 617 \times 480} = 20.607$

$M = \frac{1}{1 + 20.607} = 0.0463$

MC= 1.1 X 4 = 4.4

F (19) = 11,746 X 0.0463 + 4.4 = **548**

DSC-ILM-100

$F = \frac{1.732 \times 175 \times 11,746}{1 \times 981 \times 480} = 7.5605$

$M = \frac{1}{1 + 7.5605} = 0.1168$

MC= 14 X 4 = 56

F (20) = 11,746 X 0.1168 + 56.0 = **1,428**

VCP-SA-310

$F = \frac{1.732 \times 250 \times 11,746}{1 \times 617 \times 480} = 17.1725$

$M = \frac{1}{1 + 17.1725} = 0.055$

MC= 2.1 X 4 = 8.4

F (21) = 11,746 X 0.055 + 8.4 = **654**

LP-RWIF

$F = \frac{1.732 \times 20 \times 11,746}{1 \times 18593 \times 480} = 0.0456$

$M = \frac{1}{1 + 0.0456} = 0.9564$

MC= 0 X 4 = 0

F (22) = 11,746 X 0.9564 + 0.0 = **11,233**

XFMR-L-RWIF (SECONDARY)

$F = \frac{6,375 \times 830.4 \times 1.50}{100,000 \times 45} = 1.7646$

$M = \frac{1}{1 + 1.7646} = 0.3617$

F (23) = $\frac{480}{208}$ x 0.3617 x 6,375 = **5,321**

B ~ 480V MCC-RWIF FAULT CURRENT CALCULATIONS

SES-RWPS-1
AVAILABLE FAULT CURRENT FROM SRP
F (1) = 26,178

MTS-RWPS

$F = \frac{1.732 \times 10 \times 26,178}{2 \times 18593 \times 480} = 0.0254$

$M = \frac{1}{1 + 0.0254} = 0.9752$

MC= 0 X 4 = 0

F (2) = 26,178 X 0.9752 + 0.0 = **25,529**

MCC-RWPS-1

$F = \frac{1.732 \times 10 \times 25,529}{2 \times 18593 \times 480} = 0.0248$

$M = \frac{1}{1 + 0.0248} = 0.9758$

MC= 0 X 4 = 0

F (3) = 25,529 X 0.9758 + 0.0 = **24,911**

PMP-RW-100

$F = \frac{1.732 \times 40 \times 24,911}{1 \times 7493 \times 480} = 0.4798$

$M = \frac{1}{1 + 0.4798} = 0.6758$

MC= 77 X 4 = 308

F (4) = 24,911 X 0.6758 + 308.0 = **17,143**

XFMR-L-RWPS1 PRIMARY

$F = \frac{1.732 \times 15 \times 24,911}{1 \times 981 \times 480} = 1.3744$

$M = \frac{1}{1 + 1.3744} = 0.4212$

MC= 0 X 4 = 0

F (5) = 24,911 X 0.4212 + 0.0 = **10,493**

EDR-RW-001

$F = \frac{1.732 \times 40 \times 24,911}{1 \times 617 \times 480} = 5.8274$

$M = \frac{1}{1 + 5.8274} = 0.1465$

MC= 2.1 X 4 = 8.4

F (6) = 24,911 X 0.1465 + 8.4 = **3,658**

XFMR-L-RWPS-1 SECONDARY

$F = \frac{25,529 \times 831.36 \times 1.50}{100,000 \times 15} = 21.2236$

$M = \frac{1}{1 + 21.2236} = 0.045$

F (7) = $\frac{480}{208}$ x 0.045 x 25,529 = **2,651**

C ~ 480V MCC-RWPS FAULT CURRENT CALCULATIONS

1620 West Fountainhead Pkwy
Suite 501
Tempe, Arizona 85282
Phone: (480) 893-8860
Improving Arizona's Infrastructure Since 1942

WILSON ENGINEERS

CITY OF CHANDLER
RECLAIMED WATER INTERCONNECT FACILITY

SHORT CIRCUIT CURRENT CALCULATIONS

CITY PROJECT NO. WW1901.203
WILSON PROJECT NO. 21007

Design: PKP	Drawn: CRG	Checked: PKP
Date: 02/2022	Wilson Project No.: 21007	

Revision	Date	Description	By

VERIFY SCALES
BAR IS ONE INCH ON ORIGINAL DRAWING
0 1"
IF NOT ONE INCH ON THIS SHEET, ADJUST SCALES ACCORDINGLY

Professional Engineer
68430
PHANI KIRAN PEDDINTI
ARIZONA U.S.A.
DATE SIGNED 02-23-2022

Sheet No. **E-2.07**

AGENCY REVIEW

XREFS: TB-WE-D; SEAL-PKP; SIGN-PKP

G:\PROJECT\21007\CADD\DESIGN\ELECTRICAL\21007 E-2.07.DWG, 2/23/2022 12:45:58 PM, PPeddinti, 1:1

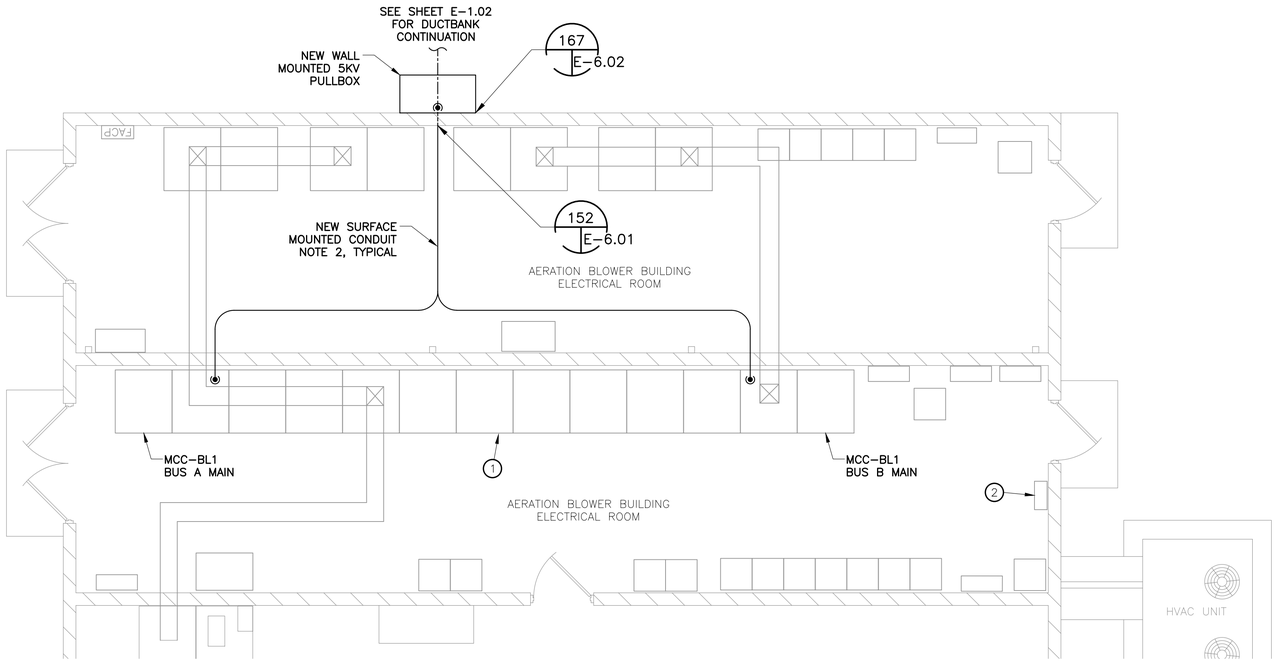

A ~ AERATION BLOWER BUILDING ELECTRICAL ROOM
SCALE: 1/4"=1'-0"

0 2 4 8
1/4" = 1'-0"

KEYED NOTES

1. EXISTING MCC-BL1
2. EXISTING LP-BL

NOTES:

1. NO WORK TO COMMENCE WITHOUT APPROVED MOPO.
2. CONDUIT RUNS SHOWN IN THIS SHEET ARE DIAGRAMMATIC ONLY. CONTRACTOR TO COORDINATE CONDUIT INSTALLATION WITH DUCTWORK, LIGHTING FIXTURES AND OTHER SYSTEMS AND EQUIPMENT AND LOCATE SO AS TO AVOID INTERFERENCES.
3. SEE SHEET E-2.01 FOR MCC-BL1 SINGLE LINE DIAGRAM MODIFICATIONS.
4. SEE SHEETS E-5.01 TO E-5.04 FOR POWER CONDUIT BLOCK DIAGRAMS.

1620 West Fountainhead Pkwy
Suite 501
Tempe, Arizona 85282
Phone: (480) 893-8860
Improving Arizona's
Infrastructure Since 1942

WILSON ENGINEERS

CITY OF CHANDLER
RECLAIMED WATER INTERCONNECT FACILITY
EXISTING AERATION BLOWER ELECTRICAL ROOM
ELECTRICAL PLAN - MODIFICATIONS

CITY PROJECT NO. WW1901.203
WILSON PROJECT NO. 21007

Design: ER	Drawn: ER	Checked: PKP
Date: 02/2022	Wilson Project No.: 21007	

Revision	Date	Description	By

VERIFY SCALES
BAR IS ONE INCH ON ORIGINAL DRAWING
0 1"
IF NOT ONE INCH ON THIS SHEET, ADJUST SCALES ACCORDINGLY

Professional Engineer
68430
PHANI KIRAN PEDDINTI
DATE SIGNED 02/23/2022
ARIZONA U.S.A.

Sheet No. **E-3.01**

AGENCY REVIEW

XREFS: TB-WE-D; XE-AER BLOWER BLDG; seal-pkp; sign-pkp

G:\PROJECT\21007\CADD\DESIGN\ELECTRICAL\21007 E-3.01.DWG, 2/23/2022 12:46:03 PM, PPeddinti, 1:1

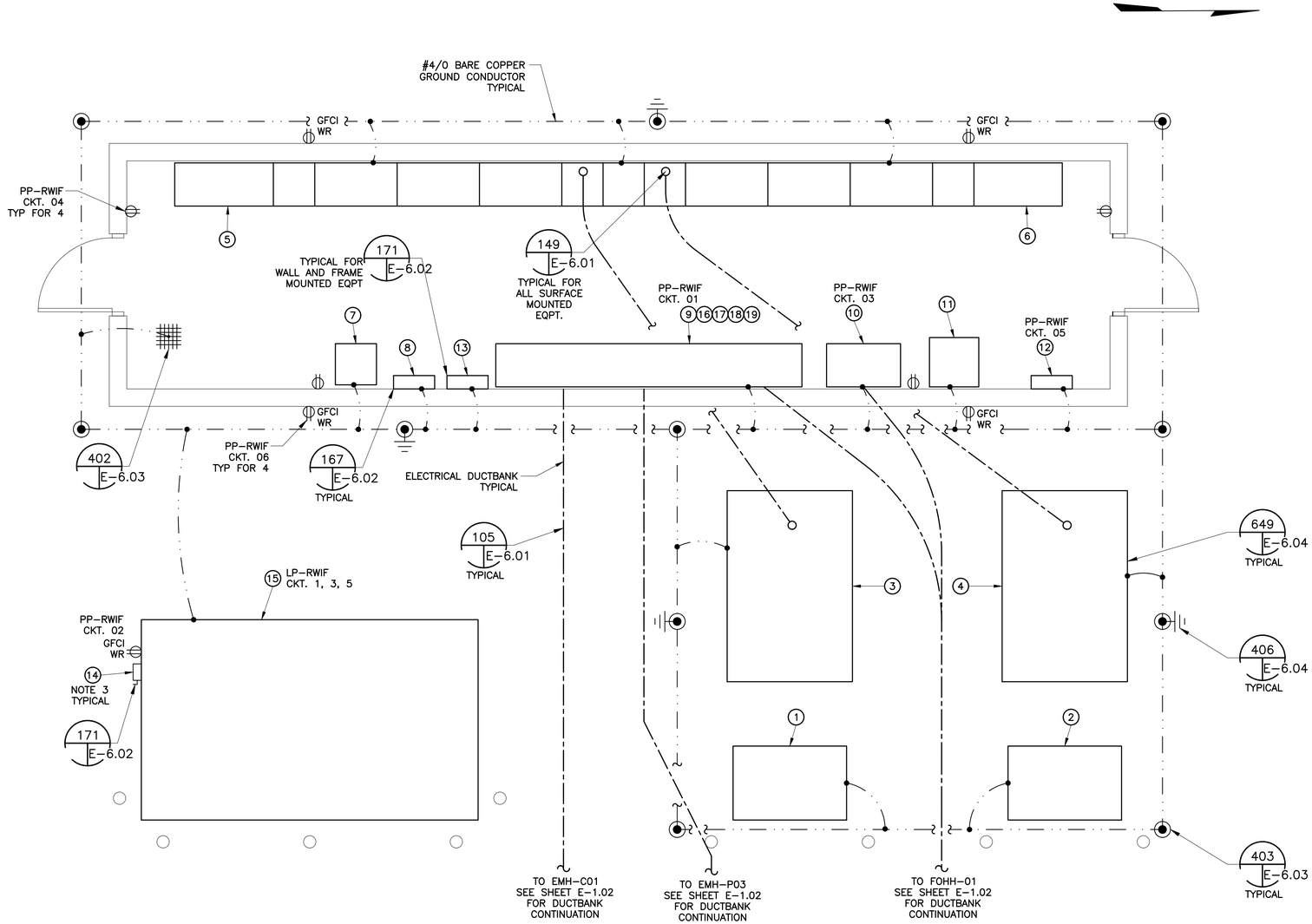

A RWIF ELECTRICAL BUILDING PLAN
SCALE: 3/8"=1'-0"

0 1 2 4
3/8" = 1'-0"

KEYED NOTES

1. 5KV DISCONNECT SWITCH DSC-RWIF-A
2. 5KV DISCONNECT SWITCH DSC-RWIF-B
3. LIQUID FILLED TRANSFORMER XFMR-RWIF-A
4. LIQUID FILLED TRANSFORMER XFMR-RWIF-B
5. MOTOR CONTROL CENTER MCC-RWIF-A
6. MOTOR CONTROL CENTER MCC-RWIF-B
7. DRY TYPE TRANSFORMER XFMR-L-RWIF
8. LIGHTING PANEL PP-RWIF
9. MEMBRANE FILTRATION SYSTEM PROCESS CONTROL PANEL PCP-001
10. PLC CABINET PLC-RWIF
11. ETHERNET COMMUNICATIONS CABINET ECOM-RWIF
12. FIRE ALARM CONTROL PANEL FACP-RWIF
13. DISTRIBUTION PANEL LP-RWIF
14. AIR CONDITIONING UNIT DISCONNECT SWITCH DSC-ACU-100
15. AIR CONDITIONING UNIT ACU-100
16. SMF REMOTE I/O NO. 1 RIO-SMF-001
17. SMF REMOTE I/O NO. 2 RIO-SMF-002
18. SMF REMOTE I/O NO. 3 RIO-SMF-003
19. SMF REMOTE I/O NO. 4 RIO-SMF-004

NOTES:

1. NO WORK TO COMMENCE WITHOUT APPROVED MOPO.
2. DUCTBANK RUNS SHOWN IN THIS SHEET ARE DIAGRAMMATIC ONLY. CONTRACTOR TO COORDINATE DUCTBANK INSTALLATION WITH EXISTING DUCTBANK, PIPING AND OTHER SYSTEMS AND EQUIPMENT AND LOCATE SO AS TO AVOID INTERFERENCES.
3. TIE ALL EQUIPMENT GROUNDS TO RAW WATER INTERCONNECT FACILITY GROUNDING SYSTEMS.
4. SEE SHEET E-2.03 FOR MCC-RWIF SINGLE LINE DIAGRAM AND PP-RWIF PANEL SCHEDULE.
5. SEE SHEET E-2.05 FOR LP-RWIF PANEL SCHEDULE.
6. SEE SHEETS E-5.01 THRU E-5.17 FOR POWER AND CONTROLS CONDUIT BLOCK DIAGRAMS.

1620 West Fountainhead Pkwy
Suite 501
Tempe, Arizona 85282
Phone: (480) 893-8860
Improving Arizona's Infrastructure Since 1942
WILSON ENGINEERS

CITY OF CHANDLER
RECLAIMED WATER INTERCONNECT FACILITY
RWIF ELECTRICAL BUILDING ELECTRICAL POWER PLAN
CITY PROJECT NO. WW1901.203
WILSON PROJECT NO. 21007

Design: ER	Drawn: ER	Checked: PKP
Date: 02/2022	Wilson Project No.: 21007	

Revision	Date	Description	By

VERIFY SCALES
BAR IS ONE INCH ON ORIGINAL DRAWING
0 1"
IF NOT ONE INCH ON THIS SHEET, ADJUST SCALES ACCORDINGLY

Professional Engineer
68430
PHANI KIRAN PEDDINTI
DATE SIGNED 02-23-2022
ARIZONA U.S.A.

Sheet No. **E-3.02**

XREFS: XC-SITE; C-GRID; TB-WE-D; C-SITE; XE-SITE ELECT; E-SITE ELECT; SEAL-PKP; SIGN-PKP

G:\PROJECT\21007\CADD\DESIGN\ELECTRICAL\21007 E-3.02.DWG, 2/23/2022 12:46:17 PM, PPeddinti, 1:1

AGENCY REVIEW

NOTES:

1. SEE SHEET E-0.01 FOR LIGHTING FIXTURE SCHEDULE.
2. SEE SHEET E-2.04 FOR PP-RWIF PANEL SCHEDULE.
3. SEE SHEETS E-5.01 THRU E-5.04 FOR POWER CONDUIT BLOCK DIAGRAMS.

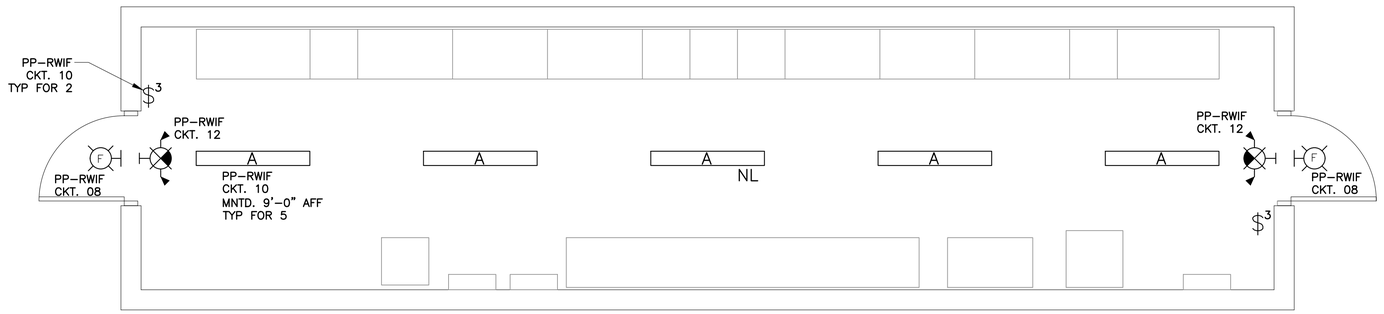

A ~ RWIF ELECTRICAL BUILDING PLAN
SCALE: 3/8"=1'-0"

0 1 2 4
3/8" = 1'-0"

AGENCY REVIEW

1620 West Fountainhead Pkwy
Suite 501
Tempe, Arizona 85282
Phone: (480) 893-8860
Improving Arizona's Infrastructure Since 1942

WILSON ENGINEERS

CITY OF CHANDLER
RECLAIMED WATER INTERCONNECT FACILITY
RWIF ELECTRICAL BUILDING
ELECTRICAL LIGHTING PLAN

CITY PROJECT NO. WW1901.203
WILSON PROJECT NO. 21007

Design: ER	Drawn: ER	Checked: PKP
Date: 02/2022	Wilson Project No.: 21007	

Revision	Date	Description	By

VERIFY SCALES
BAR IS ONE INCH ON ORIGINAL DRAWING
0 1"
IF NOT ONE INCH ON THIS SHEET, ADJUST SCALES ACCORDINGLY

68430
PHANI KIRAN
PEDDINTI
DATE SIGNED 02-23-2022
ARIZONA U.S.A.

Sheet No. **E-3.03**

XREFS: XC-SITE; C-GRID; TB-WE-D; C-SITE; XE-SITE ELECT; E-SITE ELECT; SEAL-PKP; SIGN-PKP

G:\PROJECT\21007\CADD\DESIGN\ELECTRICAL\21007 E-3.03.DWG, 2/23/2022 12:46:30 PM, PPeddinti, 1:1

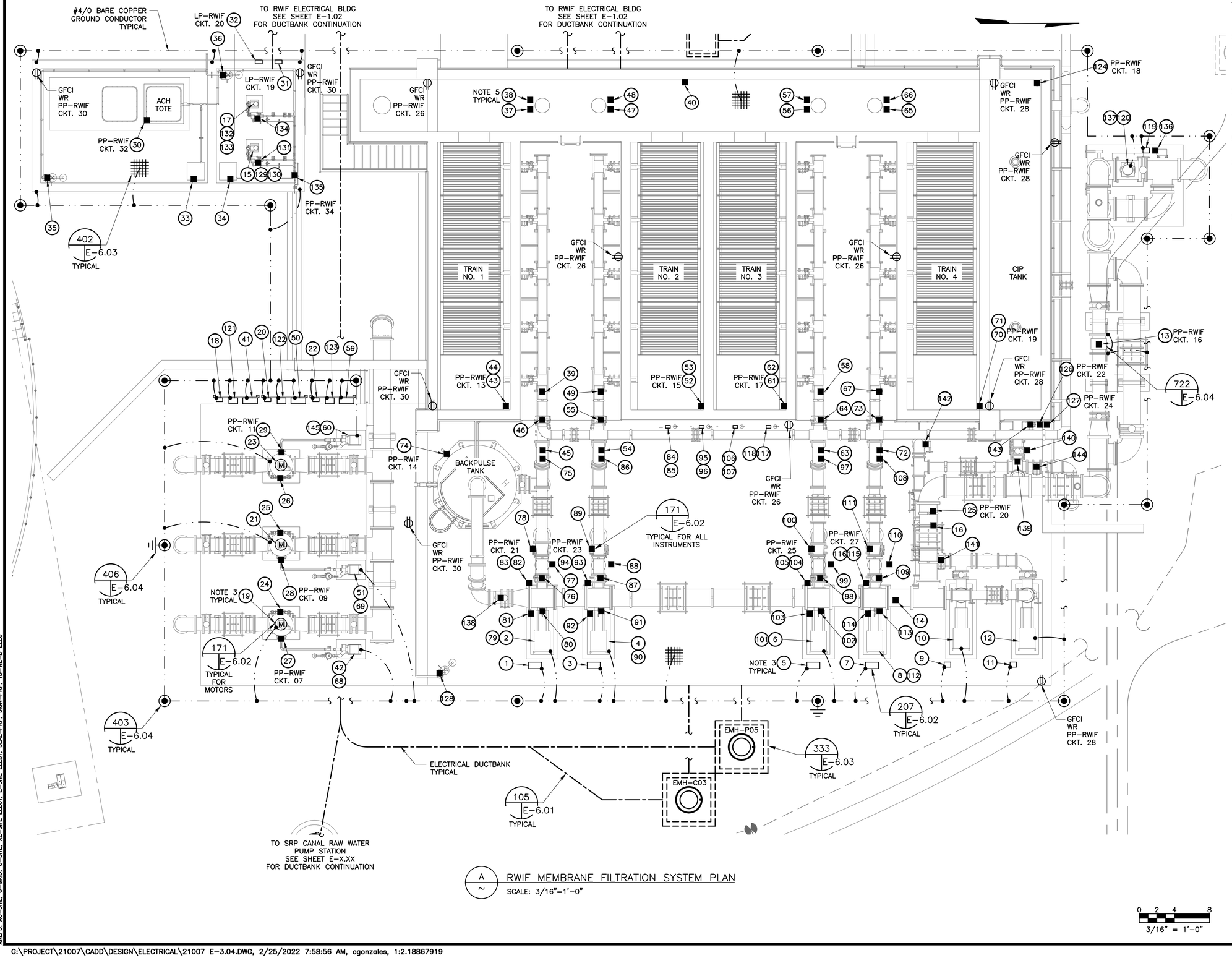

A RWIF MEMBRANE FILTRATION SYSTEM PLAN

SCALE: 3/16"=1'-0"

0 2 4 8

3/16" = 1'-0"

NOTES:

1. NO WORK TO COMMENCE WITHOUT APPROVED MOPO.
2. DUCTBANK RUNS SHOWN IN THIS SHEET ARE DIAGRAMMATIC ONLY. CONTRACTOR TO COORDINATE DUCTBANK INSTALLATION WITH EXISTING DUCTBANK, PIPING AND OTHER SYSTEMS AND EQUIPMENT AND LOCATE SO AS TO AVOID INTERFERECES.
3. TIE ALL NEW EQUIPMENT GROUNDS TO NEW GROUNDING SYSTEMS.
4. SEE SHEET E-2.03 FOR MCC-RWIF SINGLE LINE DIAGRAM.
5. SEE SHEET E-2.04 FOR PP-RWIF PANEL SCHEDULE.
6. SEE MECHANICAL DRAWINGS FOR ACTUAL EQUIPMENT LOCATIONS.
7. SEE SHEETS E-5.01 THRU E-5.17 FOR POWER AND CONTROLS CONDUIT BLOCK DIAGRAMS.
8. SEE SHEET E-3.05 FOR KEYED NOTES AND EQUIPMENT TAGS.

1620 West Fountainhead Pkwy
Suite 501
Tempe, Arizona 85282
Phone: (480) 893-8860
Improving Arizona's Infrastructure Since 1942

WILSON ENGINEERS

CITY OF CHANDLER
RECLAIMED WATER INTERCONNECT FACILITY
RWIF - MEMBRANE FILTRATION SYSTEM
ELECTRICAL POWER PLAN

CITY PROJECT NO. WW1901.203
WILSON PROJECT NO. 21007

Revision	Date	Description	By

Design: ER
Date: 02/2022
Drawn: ER
Wilson Project No.: 21007
Checked: PKP

VERIFY SCALES
BAR IS ONE INCH ON ORIGINAL DRAWING
0 1"
IF NOT ONE INCH ON THIS SHEET, ADJUST SCALES ACCORDINGLY

Professional Engineer
68430
PHANI KIRAN PEDDINTI
REGISTERED 02/28/2022
ARIZONA U.S.A.

Sheet No. **E-3.04**

XREFS: XC-SITE; C-GRID; C-SITE; XE-SITE ELECT; E-SITE ELECT; SEAL-PKP; SIGN-PKP; TB-WE-D ELEC

G:\PROJECT\21007\CADD\DESIGN\ELECTRICAL\21007 E-3.04.DWG, 2/25/2022 7:58:56 AM, cgonzales, 1:2.18867919

AGENCY REVIEW

KEYED NOTES:

1. PERMEATE PUMP 1 DISCONNECT SWITCH DSC-PP-100
2. PERMEATE PUMP 1 PMP-PP-100
3. PERMEATE PUMP 2 DISCONNECT SWITCH DSC-PP-200
4. PERMEATE PUMP 2 PMP-PP-200
5. PERMEATE PUMP 3 DISCONNECT SWITCH DSC-PP-300
6. PERMEATE PUMP 3 PMP-PP-300
7. PERMEATE PUMP 4 DISCONNECT SWITCH DSC-PP-400
8. PERMEATE PUMP 4 PMP-PP-400
9. CIP PUMP 1 DISCONNECT SWITCH DSC-CIP-710
10. CIP PUMP 1 PMP-CIP-710
11. CIP PUMP 2 DISCONNECT SWITCH DSC-CIP-720
12. CIP PUMP 1 PMP-CIP-720
13. PERMEATE FLOWMETER FIT/FE-510
14. PERMEATE TEMPERATURE TRANSMITTER TIT-001
15. ACH METERING PUMP NO. 1 PMP-ACH-610
16. CIP SOLUTION TEMPERATURE TRANSMITTER TIT-731
17. ACH METERING PUMP NO. 2 PMP-ACH-620
18. RW STRAINER DRIVE MOTOR NO. 1 DISCONNECT SWITCH DSC-SD-100
19. RW STRAINER DRIVE MOTOR NO. 1 MTR-SD-100
20. RW STRAINER DRIVE MOTOR NO. 2 DISCONNECT SWITCH, DSC-SD-200
21. RW STRAINER DRIVE MOTOR NO. 2 MTR-SD-200
22. RW STRAINER DRIVE MOTOR NO. 3 DISCONNECT SWITCH, DSC-SD-300
23. RW STRAINER DRIVE MOTOR NO. 3 MTR-SD-300
24. SELF CLEANING STRAINER NO. 1 DIFFERENTIAL PRESSURE TRANSMITTER DP-SD-100
25. SELF CLEANING STRAINER NO. 2 DIFFERENTIAL PRESSURE TRANSMITTER DP-SD-200
26. SELF CLEANING STRAINER NO. 3 DIFFERENTIAL PRESSURE TRANSMITTER DP-SD-300
27. SELF CLEANING STRAINER NO. 1 MOTOR OPERATED VALVE, EDR-SD-101
28. SELF CLEANING STRAINER NO. 2 MOTOR OPERATED VALVE, EDR-SD-201
29. SELF CLEANING STRAINER NO. 3 MOTOR OPERATED VALVE, EDR-SD-301
30. ACH WEIGHT SCALE TRANSMITTER WIT-ACH-600
31. ACH METERING PUMP NO. 1 VENDOR CONTROL PANEL, VCP-ACH-610
32. ACH METERING PUMP NO. 2 VENDOR CONTROL PANEL, VCP-ACH-620
33. ACH STORAGE AREA CONTAINMENT SUMP LEVEL SWITCH, LSH-ACH-025
34. ACH FEED AREA CONTAINMENT SUMP LEVEL SWITCH, LSH-ACH-027
35. ACH STORAGE AREA EMERGENCY EYEWASH FLOW SWITCH, FSH-ACH-026
36. ACH FEED AREA EMERGENCY EYEWASH FLOW SWITCH, FSH-ACH-028
37. SMF TANK NO. 1 INFLUENT CONTROL VALVE ACTUATOR IP-131
38. SMF TANK NO. 1 DISCHARGE CONTROL VALVE ACTUATOR IP-133
39. SMF TRAIN NO. 1 AIR SCOUR AIR CONTROL VALVE ACTUATOR POP-102
40. SMF COMMON INFLUENT CHANNEL HIGH LEVEL SWITCH LSH-001
41. STRAINER NO. 1 BACKWASH ASSIST PUMP VENDOR CONTROL PANEL, VCP-SDBW-110
42. STRAINER NO. 1 BACKWASH ASSIST PUMP PMP-SDBW-110
43. SMF TANK NO. 1 LEVEL TRANSMITTER LIT-106
44. SMF TANK NO. 1 LEVEL ELEMENT LE-106
45. SMF TANK NO. 1 PERMEATE PRESSURE TRANSMITTER PIT-107
46. SMF TANK NO. 1 BYPASS CONTROL VALVE ACTUATOR POP-132
47. SMF TANK NO. 2 INFLUENT CONTROL VALVE ACTUATOR IP-231
48. SMF TANK NO. 2 DISCHARGE CONTROL VALVE ACTUATOR IP-233
49. SMF TRAIN NO. 2 AIR SCOUR AIR CONTROL VALVE ACTUATOR POP-202
50. STRAINER NO. 2 BACKWASH ASSIST PUMP VENDOR CONTROL PANEL, VCP-SDBW-210
51. STRAINER NO. 2 BACKWASH ASSIST PUMP PMP-SDBW-210
52. SMF TANK NO. 2 LEVEL TRANSMITTER LIT-206
53. SMF TANK NO. 2 LEVEL ELEMENT LE-206
54. SMF TANK NO. 2 PERMEATE PRESSURE TRANSMITTER PIT-207
55. SMF TANK NO. 2 BYPASS CONTROL VALVE ACTUATOR POP-232
56. SMF TANK NO. 3 INFLUENT CONTROL VALVE ACTUATOR IP-331
57. SMF TANK NO. 3 DISCHARGE CONTROL VALVE ACTUATOR IP-333
58. SMF TRAIN NO. 3 AIR SCOUR AIR CONTROL VALVE ACTUATOR POP-302
59. STRAINER NO. 3 BACKWASH ASSIST PUMP VENDOR CONTROL PANEL, VCP-SDBW-310
60. STRAINER NO. 3 BACKWASH ASSIST PUMP PMP-SDBW-310
61. SMF TANK NO. 3 LEVEL TRANSMITTER LIT-306
62. SMF TANK NO. 3 LEVEL ELEMENT LE-306
63. SMF TANK NO. 3 PERMEATE PRESSURE TRANSMITTER PIT-307
64. SMF TANK NO. 3 BYPASS CONTROL VALVE ACTUATOR POP-332
65. SMF TANK NO. 4 INFLUENT CONTROL VALVE ACTUATOR IP-431
66. SMF TANK NO. 4 DISCHARGE CONTROL VALVE ACTUATOR IP-433
67. SMF TRAIN NO. 4 AIR SCOUR AIR CONTROL VALVE ACTUATOR POP-402
68. STRAINER NO. 1 BACKWASH ASSIST PUMP MOTOR HIGH TEMPERATURE SWITCH TSH-SDBW-110
69. STRAINER NO. 2 BACKWASH ASSIST PUMP MOTOR HIGH TEMPERATURE SWITCH TSH-SDBW-210
70. SMF TANK NO. 4 LEVEL TRANSMITTER LIT-406
71. SMF TANK NO. 4 LEVEL ELEMENT LE-406
72. SMF TANK NO. 4 PERMEATE PRESSURE TRANSMITTER PIT-407
73. SMF TANK NO. 4 BYPASS CONTROL VALVE ACTUATOR POP-432
74. BACKPULSE TANK LEVEL TRANSMITTER LIT-500
75. PERMEATE BACKPULSE MEMBRANE HIGH PRESSURE SWITCH PSH-107
76. PERMEATE BACKPULSE FLOW CONTROL VALVE ACTUATOR POP-109
77. PERMEATE PUMP NO. 1 FLOW CONTROL VALVE ACTUATOR POP-110
78. BACKPULSE WATER FLOW CONTROL VALVE ACTUATOR POP-519
79. PERMEATE PUMP NO. 1 MOTOR HIGH TEMPERATURE SWITCH TSH-100
80. PERMEATE PUMP NO. 1 DISCHARGE HIGH PRESSURE SWITCH PSH-112
81. PERMEATE PUMP NO. 1 DISCHARGE FLOW CONTROL VALVE POP-121
82. PERMEATE PUMP NO. 1 DISCHARGE FLOW TRANSMITTER FIT-120
83. PERMEATE PUMP NO. 1 DISCHARGE FLOW ELEMENT FE-120
84. PERMEATE PUMP NO. 1 TURBIDITY ANALYZER TRANSMITTER AIT-119
85. PERMEATE PUMP NO. 1 TURBIDITY ANALYZER ELEMENT AE-119
86. PERMEATE BACKPULSE MEMBRANE HIGH PRESSURE SWITCH PSH-207
87. PERMEATE BACKPULSE FLOW CONTROL VALVE ACTUATOR POP-209
88. PERMEATE PUMP NO. 2 FLOW CONTROL VALVE ACTUATOR POP-210
89. BACKPULSE WATER FLOW CONTROL VALVE ACTUATOR POP-520
90. PERMEATE PUMP NO. 2 MOTOR HIGH TEMPERATURE SWITCH TSH-200
91. PERMEATE PUMP NO. 2 DISCHARGE HIGH PRESSURE SWITCH PSH-212
92. PERMEATE PUMP NO. 2 DISCHARGE FLOW CONTROL VALVE POP-221
93. PERMEATE PUMP NO. 2 DISCHARGE FLOW TRANSMITTER FIT-220
94. PERMEATE PUMP NO. 2 DISCHARGE FLOW ELEMENT FE-220
95. PERMEATE PUMP NO. 2 TURBIDITY ANALYZER TRANSMITTER AIT-219
96. PERMEATE PUMP NO. 2 TURBIDITY ANALYZER ELEMENT AE-219
97. PERMEATE BACKPULSE MEMBRANE HIGH PRESSURE SWITCH PSH-307
98. PERMEATE BACKPULSE FLOW CONTROL VALVE ACTUATOR POP-309
99. PERMEATE PUMP NO. 3 FLOW CONTROL VALVE ACTUATOR POP-310
100. BACKPULSE WATER FLOW CONTROL VALVE ACTUATOR POP-521
101. PERMEATE PUMP NO. 3 MOTOR HIGH TEMPERATURE SWITCH TSH-300
102. PERMEATE PUMP NO. 3 DISCHARGE HIGH PRESSURE SWITCH PSH-312
103. PERMEATE PUMP NO. 3 DISCHARGE FLOW CONTROL VALVE POP-321
104. PERMEATE PUMP NO. 3 DISCHARGE FLOW TRANSMITTER FIT-320
105. PERMEATE PUMP NO. 3 DISCHARGE FLOW ELEMENT FE-320
106. PERMEATE PUMP NO. 3 TURBIDITY ANALYZER TRANSMITTER AIT-319
107. PERMEATE PUMP NO. 3 TURBIDITY ANALYZER ELEMENT AE-319
108. PERMEATE BACKPULSE MEMBRANE HIGH PRESSURE SWITCH PSH-407
109. PERMEATE BACKPULSE FLOW CONTROL VALVE ACTUATOR POP-409
110. PERMEATE PUMP NO. 4 FLOW CONTROL VALVE ACTUATOR POP-410
111. BACKPULSE WATER FLOW CONTROL VALVE ACTUATOR POP-522
112. PERMEATE PUMP NO. 4 MOTOR HIGH TEMPERATURE SWITCH TSH-400
113. PERMEATE PUMP NO. 4 DISCHARGE HIGH PRESSURE SWITCH PSH-412
114. PERMEATE PUMP NO. 4 DISCHARGE FLOW CONTROL VALVE POP-421
115. PERMEATE PUMP NO. 4 DISCHARGE FLOW TRANSMITTER FIT-420
116. PERMEATE PUMP NO. 4 DISCHARGE FLOW ELEMENT FE-420
117. PERMEATE PUMP NO. 4 TURBIDITY ANALYZER TRANSMITTER AIT-419
118. PERMEATE PUMP NO. 4 TURBIDITY ANALYZER ELEMENT AE-419
119. SODIUM HYPOCHLORITE INLINE MIXER DISCONNECT SWITCH DSC-ILM-100
120. SODIUM HYPOCHLORITE INLINE MIXER MIX-ILM-100
121. RW STRAINER NO. 1 LOCAL CONTROL PANEL, LCP-SD-100
122. RW STRAINER NO. 2 LOCAL CONTROL PANEL, LCP-SD-200
123. RW STRAINER NO. 3 LOCAL CONTROL PANEL, LCP-SD-300
124. CIP TANK LEVEL TRANSMITTER LIT-601
125. CIP PUMP DISCHARGE FLOW METER FIT/FE-732
126. CL2 ANALYZER TRANSMITTER NO. 1 AIT/AE-701
127. CL2 ANALYZER TRANSMITTER NO. 2 AIT/AE-702
128. BACKPULSE TANK STORAGE AREA EMERGENCY EYEWASH FLOW SWITCH FSH-001
129. ACH METERING PUMP NO. 1 MOTOR HIGH TEMPERATURE SWITCH TSH-ACH-610
130. ACH METERING PUMP NO. 1 MOTOR HIGH MOISTURE LEAK USH-ACH-610
131. ACH METERING PUMP NO. 1 DISCHARGE HIGH PRESSURE SIWTCH PSH-ACH-611
132. ACH METERING PUMP NO. 2 MOTOR HIGH TEMPERATURE SWITCH TSH-ACH-620
133. ACH METERING PUMP NO. 2 MOTOR HIGH MOISTURE LEAK USH-ACH-620
134. ACH METERING PUMP N. 2 DISCHARGE HIGH PRESSURE SWITCH PSH-ACH-620
135. ACH METERING PUMP COMMON DISCHARGE FLOW METER FIT-ACH-630
136. SODIUM HYPOCHLORITE INLINE MIXER E-STOP ES-ILM-100
137. SODIUM HYPOCHLORITE INLINE MIXER MOTOR HIGH TEMPERATURE SWITCH TSH-ILM-100
138. BACKPULSE TANK FLOW CONTROL VALVE POP-513
139. PERMEATE COMMON FLOW CONTROL VALVE POP-604
140. CLEANING SOLUTION FLOW CONTROL VALVE POP-606
141. CLEANING SOLUTION FLOW CONTROL VALVE POP-608
142. NEUTRALIZATION LOOP FLOW CONTROL VALVE POP-635
143. CIP SOLUTION FLOW CONTROL VALVE POP-633
144. CIP WASTE TO SEWER FLOW CONTROL VALVE POP-511
145. STRAINER NO. 3 BACKWASH ASSIST PUMP MOTOR HIGH TEMPERATURE SWITCH TSH-SDBW-310

1620 West Fountainhead Pkwy
Suite 501
Tempe, Arizona 85282
Phone: (480) 893-8860
Improving Arizona's Infrastructure Since 1942

WILSON ENGINEERS

CITY OF CHANDLER
RECLAIMED WATER INTERCONNECT FACILITY
RWIF – MEMBRANE FILTRATION SYSTEM
KEYED NOTES

CITY PROJECT NO. WW1901.203
WILSON PROJECT NO. 21007

Design: ER	Drawn: ER	Checked: PKP
Date: 02/2022	Wilson Project No.: 21007	

Revision	Date	Description	By

VERIFY SCALES
BAR IS ONE INCH ON ORIGINAL DRAWING
0 1"
IF NOT ONE INCH ON THIS SHEET, ADJUST SCALES ACCORDINGLY

Registered Professional Engineer
6430
PHANI KIRAN PEDDINTI
SIGNED 02-23-2022
ARIZONA U.S.A.

Sheet No. **E-3.05**

XREFS: TB-WE-D; seal-pkp; sign-pkp

G:\PROJECT\21007\CADD\DESIGN\ELECTRICAL\21007 E-3.05.DWG, 2/23/2022 12:46:51 PM, PPeddinti, 1:1

AGENCY REVIEW

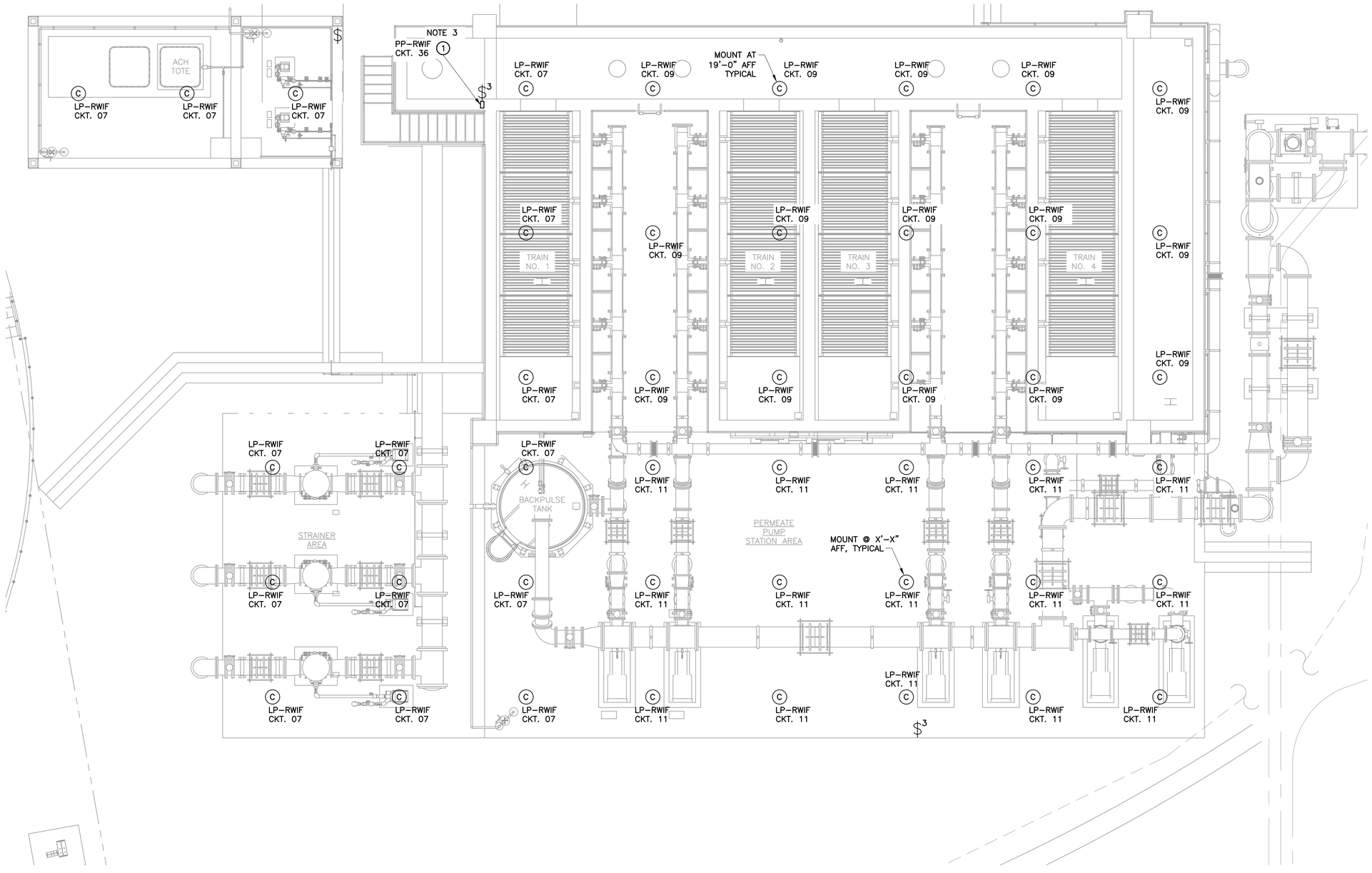

A RWIF MEMBRANE FILTRATION SYSTEM LIGHTING PLAN

SCALE: 3/16"=1'–0"

KEYED NOTES

1. SMF LIGHTING CONTROL LC–MFS–100

NOTES:

1. SEE SHEET E–2.05 FOR LP–RWIF PANEL SCHEDULE.
2. SEE SHEET E–0.01 FOR LIGHTING FIXTURE SCHEDULE.
3. FURNISH WARNING SIGN "MULTIPLE SOURCE OF POWER" IN LIGHTING CONTROL PANEL DOOR.
4. SEE SHEETS E–5.01 THRU E–5.04 FOR POWER CONDUIT BLOCK DIAGRAMS.
5. SEE SHEET E–4.09 FOR SMF LIGHTING CONTROL LC–SMF–100 SCHEMATIC DIAGRAM.

1620 West Fountainhead Pkwy
Suite 501
Tempe, Arizona 85282
Phone: (480) 893–8860

Improving Arizona's Infrastructure Since 1942

WILSON ENGINEERS

CITY OF CHANDLER
RECLAIMED WATER INTERCONNECT FACILITY
RWIF – MEMBRANE FILTRATION SYSTEM ELECTRICAL LIGHTING PLAN

CITY PROJECT NO. WW1901.203
WILSON PROJECT NO. 21007

Design: ER	Drawn: ER	Checked: PKP
Date: 02/2022	Wilson Project No.: 21007	

Revision	Date	Description	By

VERIFY SCALES
BAR IS ONE INCH ON ORIGINAL DRAWING
0 1"
IF NOT ONE INCH ON THIS SHEET, ADJUST SCALES ACCORDINGLY

Registered Professional Engineer
68432
PHANI KIRAN PEDDINTI
Date Signed 02-23-2022
State of Arizona U.S.A.

0 2 4 8
3/16" = 1'–0"

Sheet No. **E–3.06**

AGENCY REVIEW

XREFS: XC–SITE; C–GRID; TB–WE–D; C–SITE; XE–SITE ELECT; E–SITE ELECT; SEAL–PKP; SIGN–PKP

G:\PROJECT\21007\CADD\DESIGN\ELECTRICAL\21007 E–3.06.DWG, 2/23/2022 12:47:09 PM, PPeddinti, 1:1

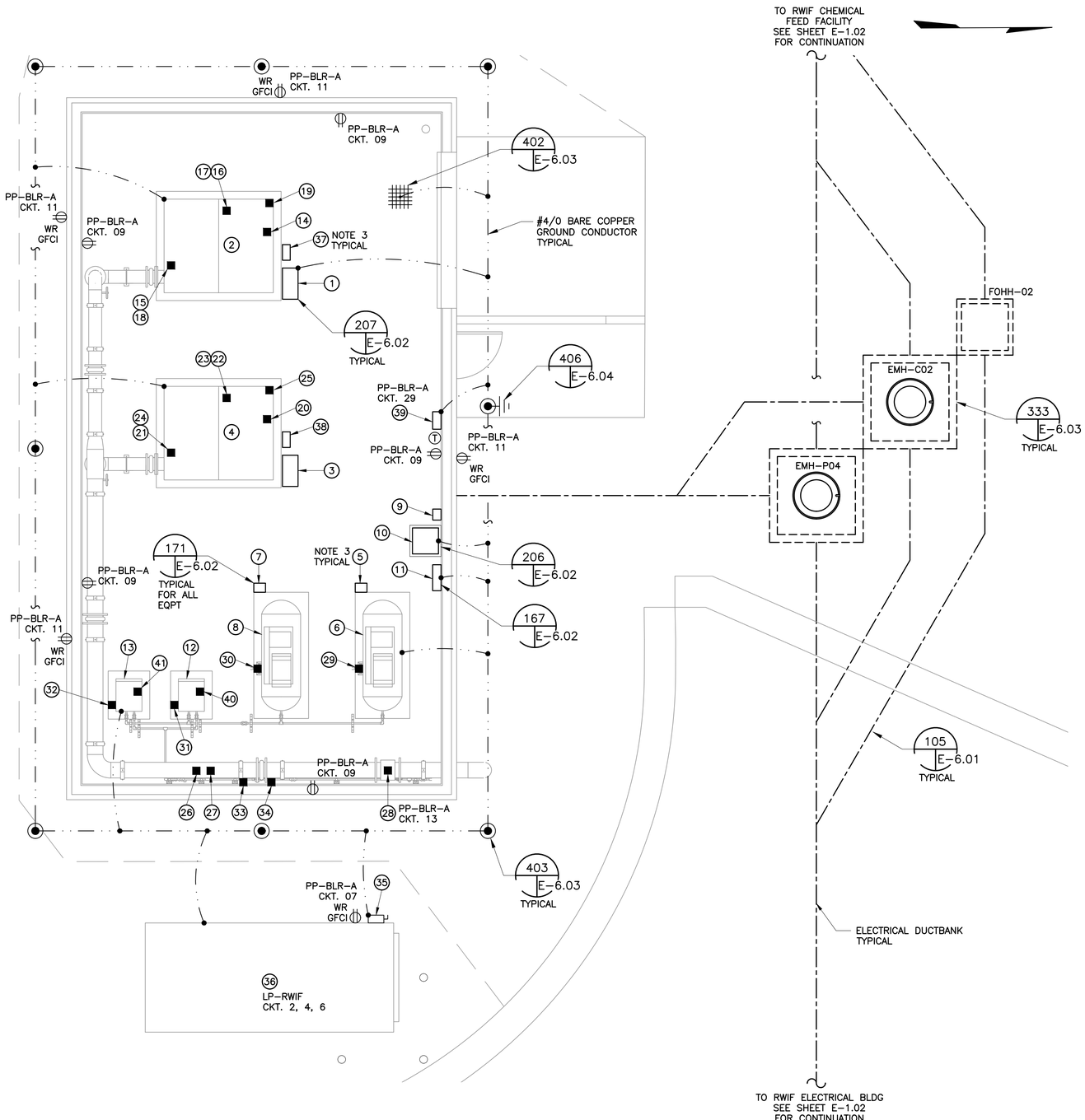

A ~ RWIF BLOWER BUILDING PLAN
SCALE: 1/4"=1'-0"

0 2 4 8
1/4" = 1'-0"

KEYED NOTES (CONT.):

35. SMF AIR SCOUR BLOWER BUILDING EVAPORATIVE COOLER DISCONNECT SW. DSC-ECU-100
36. SMF AIR SCOUR BLOWER BUILDING EVAPORATIVE COOLER ECU-100
37. SMF AIR SCOUR BLOWER NO. 1 LOCAL CONTROL PANEL LCP-BLO-010
38. SMF AIR SCOUR BLOWER NO. 2 LOCAL CONTROL PANEL LCP-BLO-020
39. FIRE ALARM CONTROL PANEL FACP-BLR
40. SMF AIR COMPRESSOR NO. 1 LOW PRESSURE SWITCH PSL-AIC-010
41. SMF AIR COMPRESSOR NO. 2 LOW PRESSURE SWITCH PSL-AIC-020

NOTES:

1. NO WORK TO COMMENCE WITHOUT APPROVED MOPO.
2. DUCTBANK RUNS SHOWN IN THIS SHEET ARE DIAGRAMMATIC ONLY. CONTRACTOR TO COORDINATE DUCTBANK INSTALLATION WITH EXISTING DUCTBANK, PIPING AND OTHER SYSTEMS AND EQUIPMENT AND LOCATE SO AS TO AVOID INTERFERECES.
3. TIE ALL NEW EQUIPMENT GROUNDS TO NEW GROUNDING SYSTEMS.
4. SEE SHEET E-2.03 FOR MCC-RWIF SINGLE LINE DIAGRAM.
5. SEE SHEET E-3.05 FOR LP-RWIF PANEL SCHEDULE.
6. SEE SHEETS E-5.01 THRU E-5.17 FOR POWER AND CONTROLS CONDUIT BLOCK DIAGRAMS.

KEYED NOTES

1. SMF AIR SCOUR BLOWER NO. 1 DISCONNECT SWITCH, DSC-BLO-010
2. SMF AIR SCOUR BLOWER NO. 1 BLO-010
3. SMF AIR SCOUR BLOWER NO. 2 DISCONNECT SWITCH, DSC-BLO-020
4. SMF AIR SCOUR BLOWER NO. 2 BLO-020
5. SMF AIR COMPRESSOR NO. 1 DISCONNECT SWITCH, DSC-AIC-010
6. SMF AIR COMPRESSOR NO. 1 AIC-010
7. SMF AIR COMPRESSOR NO. 2 DISCONNECT SWITCH, DSC-AIC-020
8. SMF AIR COMPRESSOR NO. 2 AIC-020
9. DISCONNECT SWITCH DSC-XFMR-BLR
10. DRY TYPE TRANSFORMER XFMR-L-BLR
11. LIGHTING PANEL PP-BLR-A
12. SMF COMPRESSOR AIR DRYER NO. 1 AID-011
13. SMF COMPRESSOR AIR DRYER NO. 2 AID-021
14. SMF AIR SCOUR BLOWER NO. 1 DIFFERENTIAL PRESSURE SWITCH PDS-011
15. SMF AIR SCOUR BLOWER NO. 1 AIR DISCHARGE TEMPERATURE SWITCH TSH-013
16. SMF AIR SCOUR BLOWER NO. 1 MOTOR TEMPERATURE SWITCH TSH-010
17. SMF AIR SCOUR BLOWER NO. 1 MOTOR VIBRATION SWITCH XVSH-010
18. SMF AIR SCOUR BLOWER NO. 1 AIR DISCHARGE PRESSURE SWITCH PSH-014
19. SMF AIR SCOUR BLOWER NO. 1 ENCLOSURE TEMPERATURE SWITCH TSH-017
20. SMF AIR SCOUR BLOWER NO. 2 DIFFERENTIAL PRESSURE SWITCH PDS-021
21. SMF AIR SCOUR BLOWER NO. 2 AIR DISCHARGE TEMPERATURE SWITCH TSH-023
22. SMF AIR SCOUR BLOWER NO. 2 MOTOR TEMPERATURE SWITCH TSH-020
23. SMF AIR SCOUR BLOWER NO. 2 MOTOR VIBRATION SWITCH XVSH-020
24. SMF AIR SCOUR BLOWER NO. 2 AIR DISCHARGE PRESSURE SWITCH PSH-024
25. SMF AIR SCOUR BLOWER NO. 2 ENCLOSURE TEMPERATURE SWITCH TSH-027
26. SMF AIR SCOUR BLOWER COMMON DISCHARGE FLOW SWITCH FSL-029
27. SMF AIR SCOUR BLOWER COMMON PRESSURE TRANSMITTER PIT-031
28. SMF AIR SCOUR BLOWER COMMON FLOW METER, FIT/FE-030
29. SMF AIR COMPRESSOR NO. 1 DRAIN SOLENOID VALVE, SV-AIC-010
30. SMR AIR COMPRESSOR NO. 2 DRAIN SOLENOID VALVE, SV-AIC-020
31. SMF AIR DRYER NO. 1 DRAIN SOLENOID VALVE, SV-AID-011
32. SMF AIR DRYER NO. 2 DRAIN SOLENOID VALVE, SV-AID-021
33. SMF AIR COMPRESSOR LINE LOW PRESSURE SWITCH, PSL-AIC-031
34. SMF INSTRUMENT AIR LOW PRESSURE SWITCH, PSL-AIC-032

1620 West Fountainhead Pkwy
Suite 501
Tempe, Arizona 85282
Phone: (480) 893-8860
Improving Arizona's Infrastructure Since 1942
WILSON ENGINEERS

CITY OF CHANDLER
RECLAIMED WATER INTERCONNECT FACILITY
RWIF – BLOWER BUILDING ELECTRICAL POWER PLAN
CITY PROJECT NO. WW1901.203
WILSON PROJECT NO. 21007

Design: ER	Drawn: ER	Checked: PKP
Date: 02/2022	Wilson Project No.: 21007	

Revision	Date	Description	By

VERIFY SCALES
BAR IS ONE INCH ON ORIGINAL DRAWING
0 1"
IF NOT ONE INCH ON THIS SHEET, ADJUST SCALES ACCORDINGLY

Professional Engineer Certificate
68430
PHANI KIRAN PEDDINTI
ARIZONA U.S.A.
DATE SIGNED 02-23-2022

Sheet No. **E-3.07**

AGENCY REVIEW

XREFS: XC-SITE; C-GRID; TB-WE-D; C-SITE; XE-SITE ELECT; E-SITE ELECT; CP-ROAD; SEAL-PKP; SIGN-PKP

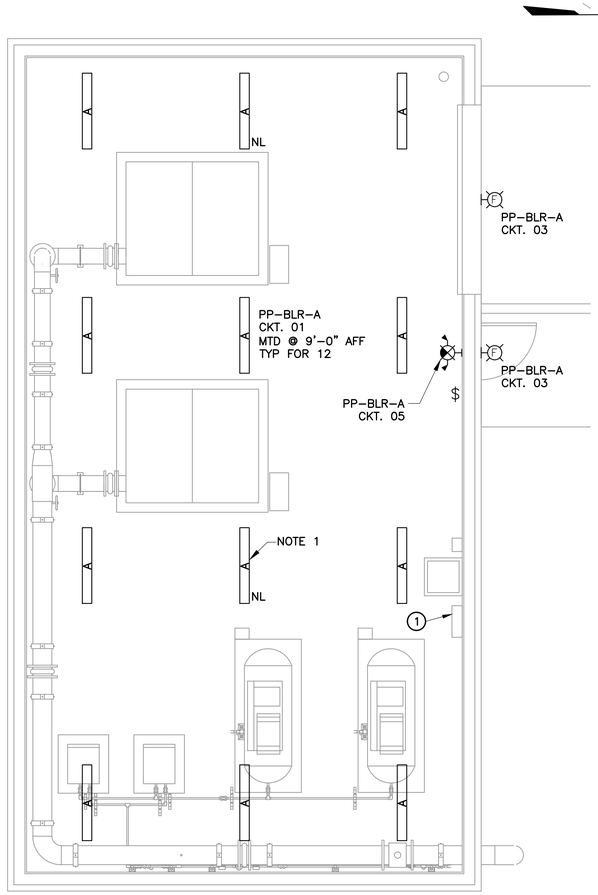

A RWIF BLOWER BUILDING PLAN
SCALE: 1/4"=1'-0"

KEYED NOTES

(1) LIGHTING PANEL PP-BLR-A

NOTES:

1. LIGHT FIXTURE SHALL BE SUSPENDED BELOW HVAC DUCT. FURNISH UNISTRUT AND HANGER ROD AS REQUIRED FOR SUPPORT FROM THE ROOF SYSTEMS.
2. SEE SHEET E-0.01 FOR LIGHTING FIXTURE SCHEDULE.
3. SEE SHEET E-2.04 FOR PP-BLR-A PANEL SCHEDULE.
4. SEE SHEETS E-5.01 THRU E-5.04 FOR POWER CONDUIT BLOCK DIAGRAMS.

0 2 4 8
1/4" = 1'-0"

1620 West Fountainhead Pkwy
Suite 501
Tempe, Arizona 85282
Phone: (480) 893-8860
Improving Arizona's Infrastructure Since 1942

WILSON ENGINEERS

CITY OF CHANDLER
RECLAIMED WATER INTERCONNECT FACILITY
RWIF – BLOWER BUILDING
ELECTRICAL LIGHTING PLAN

CITY PROJECT NO. WW1901.203
WILSON PROJECT NO. 21007

Design: ER	Drawn: ER	Checked: PKP
Date: 02/2022	Wilson Project No.: 21007	

Revision	Date	Description	By

VERIFY SCALES
BAR IS ONE INCH ON ORIGINAL DRAWING
0 1"
IF NOT ONE INCH ON THIS SHEET, ADJUST SCALES ACCORDINGLY

Registered Professional Engineer
68430
PHANI KIRAN PEDDINTI
DATE SIGNED 02/23/2022
ARIZONA U.S.A.

Sheet No. **E-3.08**

AGENCY REVIEW

XREFS: XC-SITE; C-GRID; TB-WE-D; C-SITE; XE-SITE ELECT; E-SITE ELECT; CP-ROAD; SEAL-PKP; SIGN-PKP

G:\PROJECT\21007\CADD\DESIGN\ELECTRICAL\21007 E-3.08.DWG, 2/23/2022 12:47:43 PM, PPeddinti, 1:1

NOTES:

1. NO WORK TO COMMENCE WITHOUT APPROVED MOPO.
2. DUCTBANK RUNS SHOWN IN THIS SHEET ARE DIAGRAMMATIC ONLY. CONTRACTOR TO COORDINATE DUCTBANK INSTALLATION WITH EXISTING DUCTBANK, PIPING AND OTHER SYSTEMS AND EQUIPMENT AND LOCATE SO AS TO AVOID INTERFERECES.
3. TIE ALL NEW EQUIPMENT GROUNDS TO NEW GROUNDING SYSTEMS.
4. SEE SHEET E-2.03 FOR MCC-RWIF SINGLE LINE DIAGRAM.
5. SEE SHEET E-2.04 FOR PP-BLR-A PANEL SCHEDULE.
6. SEE SHEETS E-5.01 THRU E-5.17 FOR POWER AND CONTROLS CONDUIT BLOCK DIAGRAMS.
7. SEE SHEET E-3.10 FOR KEYED NOTES AND EQUIPMENT TAGS.

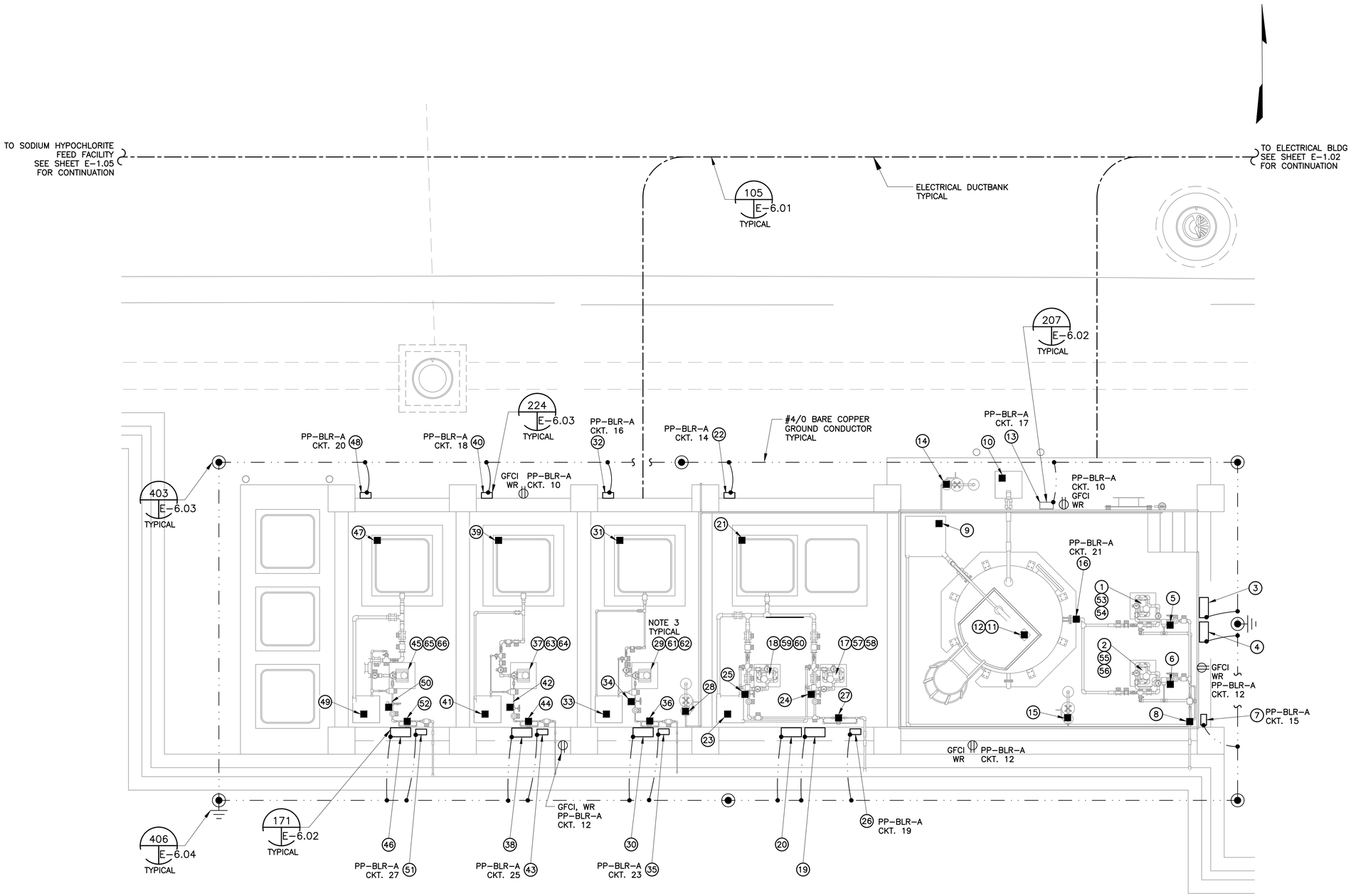

A RWIF CHEMICAL FEED FACILITY PLAN
SCALE: 1/4"=1'-0"

0 2 4 8
1/4" = 1'-0"

1620 West Fountainhead Pkwy
Suite 501
Tempe, Arizona 85282
Phone: (480) 893-8860
Improving Arizona's Infrastructure Since 1942

WILSON ENGINEERS

CITY OF CHANDLER
RECLAIMED WATER INTERCONNECT FACILITY
RWIF – MFS CHEMICAL FEED FACILITY
ELECTRICAL POWER PLAN

CITY PROJECT NO. WW1901.203
WILSON PROJECT NO. 21007

Design: ER	Drawn: ER	Checked: PKP
Date: 02/2022	Wilson Project No.: 21007	

Revision	Date	Description	By

VERIFY SCALES
BAR IS ONE INCH ON ORIGINAL DRAWING
0 1"
IF NOT ONE INCH ON THIS SHEET, ADJUST SCALES ACCORDINGLY



Sheet No. **E-3.09**

AGENCY REVIEW

XREFS: XC-SITE; C-GRID; TB-WE-D; C-SITE; XE-SITE ELECT; E-SITE ELECT; SEAL-PKP; SIGN-PKP

KEYED NOTES:

1. SODIUM HYPOCHLORITE METERING PUMP NO. 1, PMP–SHC–110
2. SODIUM HYPOCHLORITE METERING PUMP NO. 2, PMP–SHC–120
3. SODIUM HYPOCHLORITE METERING PUMP NO. 1 VENDOR CONTROL PANEL VCP–SHC–110
4. SODIUM HYPOCHLORITE METERING PUMP NO. 2 VENDOR CONTROL PANEL VCP–SHC–120
5. SODIUM HYPOCHLORITE METERING PUMP NO. 1 DISCHARGE HIGH PRESSURE SWITCH PSH–SHC–111
6. SODIUM HYPOCHLORITE METERING PUMP NO. 2 DISCHARGE HIGH PRESSURE SWITCH PSH–SHC–121
7. SODIUM HYPOCHLORITE MAINTENANCE CLEAN PUMP DISCHARGE FLOW METER TRANSMITTER, FIT–SHC–130
8. SODIUM HYPOCHLORITE MAINTENANCE CLEAN PUMP DISCHARGE FLOW METER ELEMENT FE–SHC–130
9. SODIUM HYPOCHLORITE STORAGE AREA CONTAINMENT SUMP HIGH LEVEL SWITCH LSH–SHC–003
10. SODIUM HYPOCHLORITE UNLOADING STATION CONTAINMENT SUMP HIGH LEVEL SWITCH LSH–SHC–002
11. SODIUM HYPOCHLORITE TANK LEVEL TRANSMITTER LIT–SHC–001
12. SODIUM HYPOCHLORITE TANK LEVEL ELEMENT LE–SHC–001
13. SODIUM HYPOCHLORITE FILL TANK LOCAL CONTROL PANEL LCP–SHC–001
14. SODIUM HYPOCHLORITE UNLOADING STATION EMERGENCY SHOWER AND EYEWASH FLOW SWITCH, FSH–SHC–004
15. SODIUM HYPOCHLORITE STORAGE TANK EMERGENCY SHOWER AND EYEWASH FLOW SWITCH, FSH–SHC–005
16. SODIUM HYPOCHLORITE STORAGE TANK DISCHARGE VALVE ACTUATOR EDR–SHC–007
17. CITRIC ACID METERING PUMP NO. 1 PMP–CA–210
18. CITRIC ACID METERING PUMP NO. 2 PMP–CA–220
19. CITRIC ACID METERING PUMP NO. 1 VENDOR CONTROL PANEL VCP–CA–210
20. CITRIC ACID METERING PUMP NO. 2 VENDOR CONTROL PANEL VCP–CA–220
21. CITRIC ACID TOTE WEIGHT SCALE SCL–CA–200
22. CITRIC ACID TOTE WEIGHT SCALE TRANSMITTER WIT–CA–200
23. CITRIC ACID STORAGE AREA CONTAINMENT SUMP HIGH LEVEL SWITCH LSH–CA–009
24. CITRIC ACID METERING PUMP NO. 1 DISCHARGE HIGH PRESSURE SWITCH PSH–CA–211
25. CITRIC ACID METERING PUMP NO. 2 DISCHARGE HIGH PRESSURE SWITCH PSH–CA–221
26. CITRIC ACID FLOW METER TRANSMITTER FIT–CA–230
27. CITRIC ACID FLOW METER ELEMENT FE–CA–230
28. CHEMICAL STORAGE AREA EMERGENCY EYEWASH FLOW SWITCH FSH–CSA–010
29. SULFURIC ACID METERING PUMP PMP–SA–310
30. SULFURIC ACID METERING PUMP VENDOR CONTROL PANEL VCP–SA–310
31. SULFURIC ACID TOTE WEIGHT SCALE SCL–SA–300
32. SULFURIC ACID TOTE WEIGHT TRANSMITTER WIT–SA–300
33. SULFURIC ACID STORAGE AREA CONTAINMENT SUMP HIGH LEVEL SWITCH LSH–SA–013
34. SULFURIC ACID METERING PUMP DISCHARGE HIGH PRESSURE SWITCH PSH–SA–311
35. SULFURIC ACID FLOW METER TRANSMITTER FIT–SA–330
36. SULFURIC ACID FLOW METER ELEMENT FE–SA–330
37. SODIUM BISULFITE METERING PUMP PMP–SBS–410
38. SODIUM BISULFITE METERING PUMP VENDOR CONTROL PANEL VCP–SBS–410
39. SODIUM BISULFITE TOTE WEIGHT SCALE SCL–SBS–400
40. SODIUM BISULFITE TOTE WEIGHT SCALE TRANSMITTER WIT–SBS–400
41. SODIUM BISULFITE STORAGE AREA CONTAINMENT SUMP HIGH LEVEL SWITCH LSH–SBS–017
42. SODIUM BISULFITE METERING PUMP DISCHARGE HIGH PRESSURE SWITCH PSH–SBS–411
43. SODIUM BISULFITE FLOW METER TRANSMITTER FIT–SBS–430
44. SODIUM BISULFITE FLOW METER ELEMENT FE–SBS–430
45. SODIUM HYDROXIDE METERING PUMP PMP–SH–510
46. SODIUM HYDROXIDE METERING PUMP VENDOR CONTROL PANEL VCP–SH–510
47. SODIUM HYDROXIDE TOTE WEIGHT SCALE SCL–SH–500
48. SODIUM HYDROXIDE TOTE WEIGHT SCALE TRANSMITTER WIT–SH–500
49. SODIUM HYDROXIDE STORAGE CONTAINMENT SUMP HIGH LEVEL SWITCH LSH–SH–021
50. SODIUM HYDROXIDE METERING PUMP DISCHARGE HIGH PRESSURE SWITCH PSH–SH–511
51. SODIUM HYDROXIDE FLOW METER TRANSMITTER FIT–SH–530
52. SODIUM HYDROXIDE FLOW METER ELEMENT FE–SH–530
53. SODIUM HYPOCHLORITE METERING PUMP NO. 1 MOTOR HIGH TEMPERATURE SW TSH–SHC–110
54. SODIUM HYPOCHLORITE METERING PUMP NO. 1 MOTOR MOISTURE LEAK USH–SHC–110
55. SODIUM HYPOCHLORITE METERING PUMP NO. 2 MOTOR HIGH TEMPERATURE SW TSH–SHC–120
56. SODIUM HYPOCHLORITE METERING PUMP NO. 2 MOTOR MOISTURE LEAK USH–SHC–120
57. CITRIC ACID METERING PUMP NO. 1 MOTOR HIGH TEMPERATURE SWITCH TSH–CA–210
58. CITRIC ACID METERING PUMP NO. 1 MOTOR MOISTURE LEAK USH–CA–210
59. CITRIC ACID METERING PUMP NO. 2 MOTOR HIGH TEMPERATURE SWITCH TSH–CA–220
60. CITRIC ACID METERING PUMP NO. 2 MOTOR MOISTURE LEAK USH–CA–220
61. SULFURIC ACID METERING PUMP MOTOR TEMPERATURE SWITCH TSH–SA–310
62. SULFURIC ACID METERING PUMP MOTOR MOISTURE LEAK USH–SA–310
63. SODIUM BISULFITE METERING PUMP MOTOR TEMPERATURE SWITCH TSH–SBS–410
64. SODIUM BISULFITE METERING PUMP MOTOR MOISTURE LEAK USH–SBS–410
65. SODIUM HYDROXIDE METERING PUMP MOTOR TEMPERATURE SWITCH TSH–SH–510
66. SODIUM HYDROXIDE METERING PUMP MOTOR MOISTURE LEAK USH–SH–510

1620 West Fountainhead Pkwy
Suite 501
Tempe, Arizona 85282
Phone: (480) 893-8860

Improving Arizona's Infrastructure Since 1942

WILSON ENGINEERS

CITY OF CHANDLER
RECLAIMED WATER INTERCONNECT FACILITY
RWIF – MFS CHEMICAL FEED FACILITY
KEYED NOTES

CITY PROJECT NO. WW1901.203
WILSON PROJECT NO. 21007

Design: ER	Drawn: ER	Checked: PKP
Date: 02/2022	Wilson Project No.: 21007	

Revision	Date	Description	By

VERIFY SCALES
BAR IS ONE INCH ON ORIGINAL DRAWING
0 1"
IF NOT ONE INCH ON THIS SHEET, ADJUST SCALES ACCORDINGLY

Professional Engineer – 68430 – PHANI KIRAN PEDDINTI – Date Signed 02/23/2022 – ARIZONA U.S.A.

Sheet No. **E–3.10**

XREFS: TB–WF–D; SEAL_PKP; SIGN–PKP

G:\PROJECT\21007\CADD\DESIGN\ELECTRICAL\21007 E–3.10.DWG, 2/23/2022 12:48:05 PM, PPeddinti, 1:1

AGENCY REVIEW

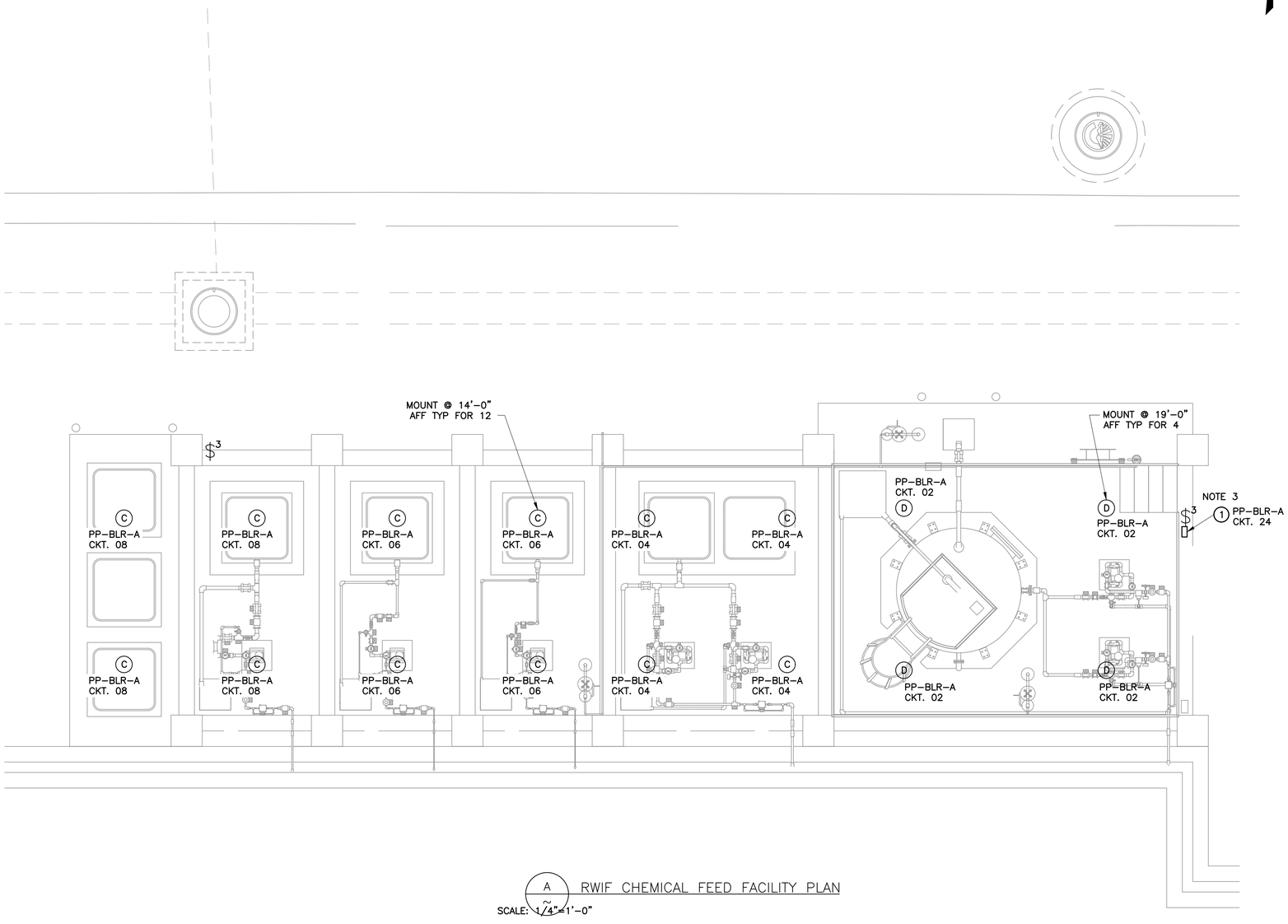

A RWIF CHEMICAL FEED FACILITY PLAN

SCALE: 1/4"=1'-0"

KEYED NOTES

(1) CHEMICAL FEED FACILITY LIGHTING CONTROL LC-CFF-100

NOTES:

1. SEE SHEET E-0.01 FOR LIGHTING FIXTURE SCHEDULE.
2. SEE SHEET E-2.04 FOR PP-BLR-A PANEL SCHEDULE.
3. FURNISH WARNING SIGN "MULTIPLE SOURCE OF POWER" IN LIGHTING CONTROL PANEL DOOR.
4. SEE SHEETS E-5.01 THRU E-5.04 FOR POWER CONDUIT BLOCK DIAGRAMS.
5. SEE SHEET E-4.09 FOR CHEMICAL FEED FACILITY LIGHTING CONTROL LC-CFF-100 SCHEMATIC DIAGRAM.

0 2 4 8

1/4" = 1'-0"

1620 West Fountainhead Pkwy
Suite 501
Tempe, Arizona 85282
Phone: (480) 893-8860

Improving Arizona's Infrastructure Since 1942

WILSON ENGINEERS

CITY OF CHANDLER
RECLAIMED WATER INTERCONNECT FACILITY

RWIF - MFS CHEMICAL FEED FACILITY
ELECTRICAL LIGHTING PLAN

CITY PROJECT NO. WW1901.203
WILSON PROJECT NO. 21007

Design: ER	Drawn: ER	Checked: PKP
Date: 02/2022	Wilson Project No.: 21007	

Revision	Date	Description	By

VERIFY SCALES
BAR IS ONE INCH ON ORIGINAL DRAWING
0 1"
IF NOT ONE INCH ON THIS SHEET, ADJUST SCALES ACCORDINGLY

Professional Engineer Certificate No. 68430 PHANI KIRAN PEDDINTI STATE OF ARIZONA U.S.A. DATE SIGNED 02/23/2022

Sheet No. **E-3.11**

AGENCY REVIEW

XREFS: XC-SITE; C-GRID; TB-WE-D; C-SITE; XE-SITE ELECT; E-SITE ELECT; CP-ROAD; SEAL-PKP; SIGN-PKP

G:\PROJECT\21007\CADD\DESIGN\ELECTRICAL\21007 E-3.11.DWG, 2/23/2022 12:48:19 PM, PPeddinti, 1:1

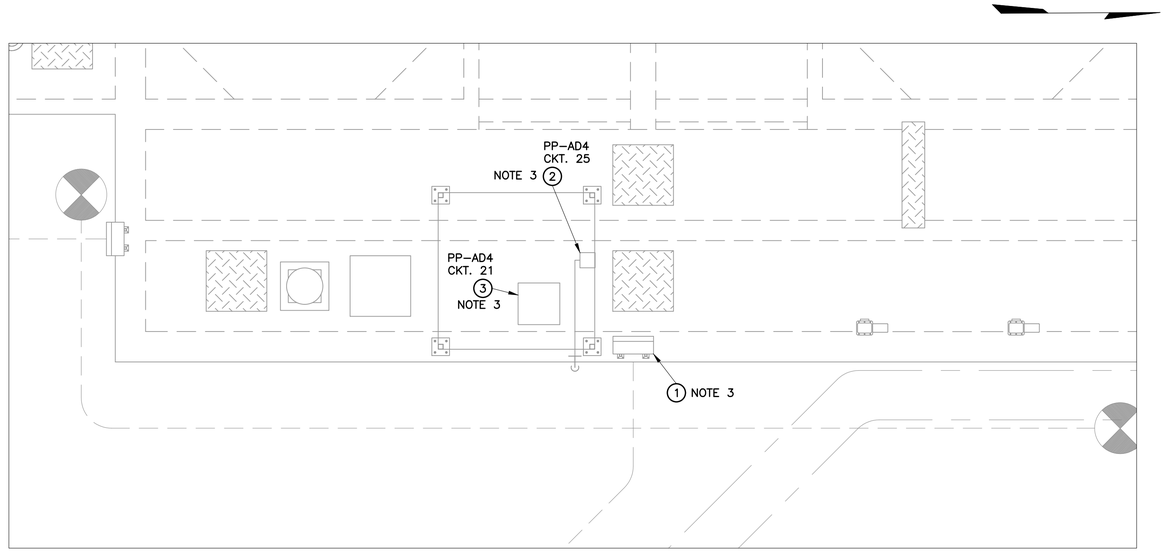

A
~
CHLORINE CONTACT BASIN PARTIAL PLAN – DEMOLITION
SCALE: 1" = 5'-0"

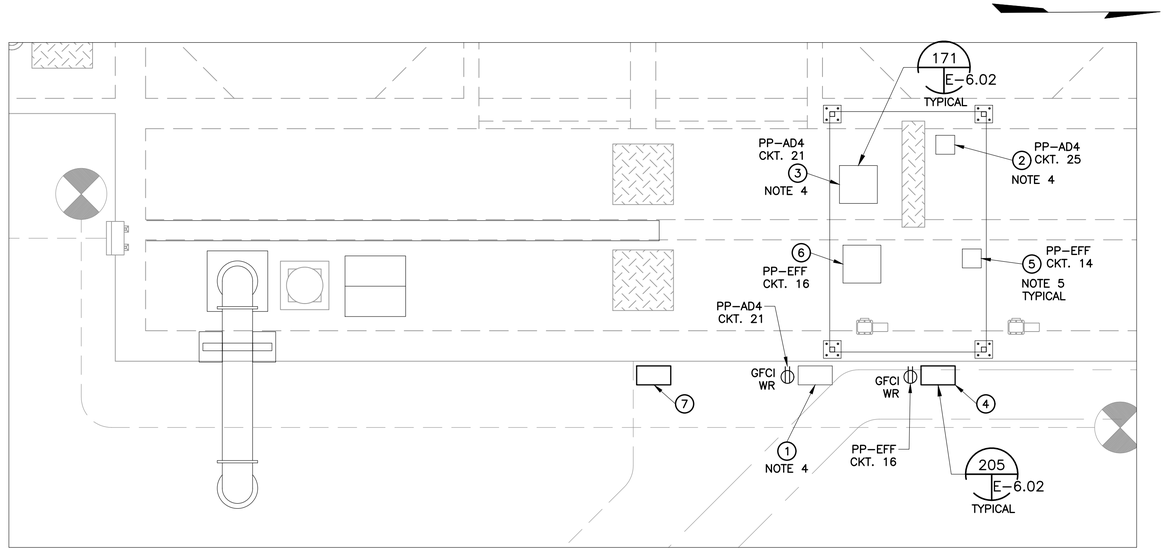

B
~
CHLORINE CONTACT BASIN PARTIAL PLAN – MODIFICATIONS
SCALE: 1" = 5'-0"

0 10 20 30 40
SCALE: 1" = 20'

KEYED NOTES

(1) EXISTING CHLORINE SAMPLE PUMP CONTROL PANEL ECP-CCB-SMP2

(2) EXISTING CHLORINE ANALYZER SAMPLE PUMP CCB-002-SMP

(3) EXISTING COMPOSITE SAMPLER CCB-002-SLP

(4) NEW CHLORINE SAMPLE PUMP CONTROL PANEL ECP-CCB-SMP3

(5) NEW CHLORINE ANALYZER SAMPLE PUMP CCB-003-SMP

(6) NEW COMPOSITE SAMPLER CCB-003-SLP

(7) NEW PULLBOX PB-CCB-001

NOTES:

1. NO WORK TO COMMENCE WITHOUT APPROVED MOPO.
2. CONTRACTOR SHALL FIELD VERIFY THE CIRCUITS AND PANEL FEEDING THE EXISTING CHLORINE ANALYZER SAMPLE PUMP AND COMPOSITE SAMPLER INCLUDING THE EXISTING CONDUIT ROUTING PRIOR TO ANY ELECTRICAL WORKS.
3. DE-ENERGIZE, DISCONNECT AND RELOCATE EXISTING CHLORINE SAMPLE PUMP CONTROL PANEL, CHLORINE ANALYZER SAMPLE PUMP AND COMPOSITE SAMPLER. PULL OUT ASSOCIATED POWER AND CONTROL CONDUCTORS BACK TO SOURCE. EXISTING EMBEDDED CONDUITS TO BE REUSED. REFER TO CHLORINE CONTACT BASIN PARTIAL PLAN MODIFICATIONS FOR EQUIPMENT NEW LOCATIONS.
4. RE-FEED THE RELOCATED CHLORINE SAMPLE PUMP CONTROL PANEL, CHLORINE ANALYZER SAMPLE PUMP AND COMPOSITE SAMPLER. EXTEND EXISTING CONDUITS AS NECESSARY.
5. TIE THE NEW AND RELOCATED EQUIPMENT GROUNDS TO EXISTING GROUNDING SYSTEMS.
6. SEE SHEET E-2.05 FOR PP-AD4 AND PP-EFF PANEL SCHEDULES.
7. SEE SHEETS E-5.01 AND E-5.17 FOR POWER AND CONTROLS CONDUIT BLOCK DIAGRAMS.

1620 West Fountainhead Pkwy
Suite 501
Tempe, Arizona 85282
Phone: (480) 893-8860
Improving Arizona's Infrastructure Since 1942
WILSON ENGINEERS

CITY OF CHANDLER
RECLAIMED WATER INTERCONNECT FACILITY
AWRF CHLORINE CONTACT BASIN
ELECTRICAL PLAN – MODIFICATIONS
CITY PROJECT NO. WW1901.203
WILSON PROJECT NO. 21007

Design: ER	Drawn: ER	Checked: PKP
Date: 02/2022	Wilson Project No.: 21007	

Revision	Date	Description	By

VERIFY SCALES
BAR IS ONE INCH ON ORIGINAL DRAWING
0 1"
IF NOT ONE INCH ON THIS SHEET, ADJUST SCALES ACCORDINGLY

68430
PHANI KIRAN PEDDINTI
SIGNED 02-23-2022
ARIZONA U.S.A.

Sheet No. **E-3.12**

AGENCY REVIEW

XREFS: XC-SITE; C-GRID; TB-WE-D; C-SITE; XE-SITE ELECT; E-SITE ELECT; SEAL-PKP; SIGN-PKP

G:\PROJECT\21007\CADD\DESIGN\ELECTRICAL\21007 E-3.12.DWG, 2/23/2022 12:48:49 PM, PPeddinti, 1:1

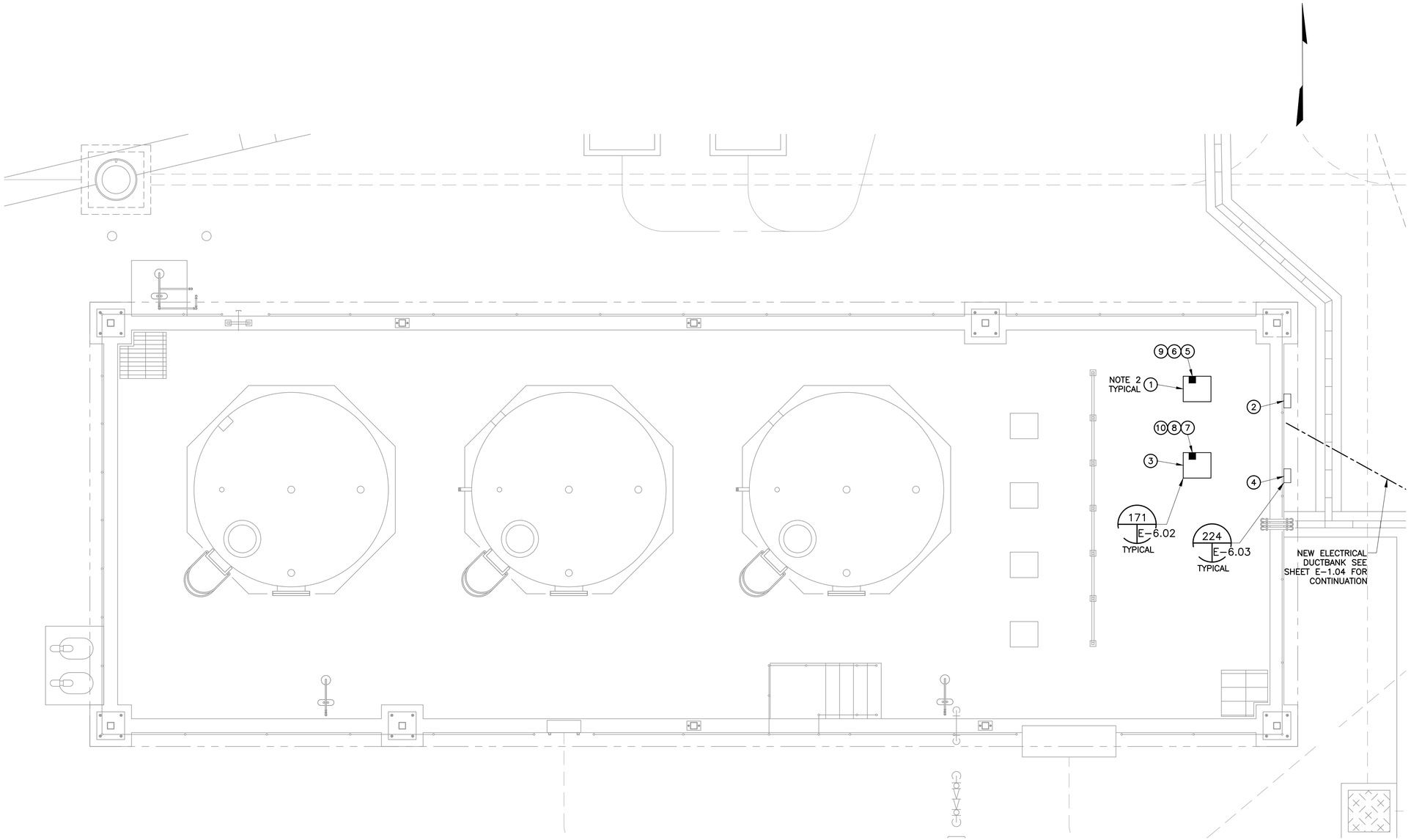

A ~ BULK SODIUM HYPOCHLORITE FACILITY PLAN

SCALE: 1/4"=1'-0"

0 2 4 8

1/4" = 1'-0"

KEYED NOTES

1. DISINFECTION SODIUM HYPOCHLORITE METERING PUMP NO. 1 PMP-BSHC-810
2. DISINFECTION SODIUM HYPOCHLORITE METERING PUMP NO. 1 VENDOR CONTROL PANEL VCP-BSHC-810
3. DISINFECTION SODIUM HYPOCHLORITE METERING PUMP NO. 2 PMP-BSHC-820
4. DISINFECTION SODIUM HYPOCHLORITE METERING PUMP NO. 2 VENDOR CONTROL PANEL VCP-BSHC-820
5. DISINFECTION SODIUM HYPOCHLORITE PUMP NO. 1 MOTOR TEMPERATURE SWITCH TSH-BSHC-810
6. DISINFECTION SODIUM HYPOCHLORITE PUMP NO. 1 MOTOR MOISTURE LEAK UAH-BSHC-810
7. DISINFECTION SODIUM HYPOCHLORITE PUMP NO. 2 MOTOR TEMPERATURE SWITCH TSH-BSHC-820
8. DISINFECTION SODIUM HYPOCHLORITE PUMP NO. 2 MOTOR MOISTURE LEAK UAH-BSHC-820
9. DISINFECTION SODIUM HYPOCHLORITE PUMP NO. 1 DISCHARGE HIGH PRESS SW PSH-BSHC-811
10. DISINFECTION SODIUM HYPOCHLORITE PUMP NO. 2 DISCHARGE HIGH PRESS SW PSH-BSHC-821

NOTES:

1. NO WORK TO COMMENCE WITHOUT APPROVED MOPO.
2. TIE ALL NEW EQUIPMENT GROUNDS TO EXISTING GROUNDING SYSTEMS.
3. SEE SHEET E-2.03 FOR MCC-RWIF SINGLE LINE DIAGRAM.
4. SEE SHEET E-2.04 FOR PP-BLR-A PANEL SCHEDULE.
5. SEE SHEETS E-5.01 THRU E-5.17 FOR POWER AND CONTROLS CONDUIT BLOCK DIAGRAMS.

1620 West Fountainhead Pkwy
Suite 501
Tempe, Arizona 85282
Phone: (480) 893-8860

Improving Arizona's Infrastructure Since 1942

WILSON ENGINEERS

CITY OF CHANDLER
RECLAIMED WATER INTERCONNECT FACILITY

BULK SODIUM HYPOCHLORITE FACILITY
ELECTRICAL PLAN - MODIFICATIONS

CITY PROJECT NO. WW1901.203
WILSON PROJECT NO. 21007

Design: ER
Date: 02/2022
Drawn: ER
Wilson Project No.: 21007
Checked: PKP

Revision	Date	Description	By

VERIFY SCALES
BAR IS ONE INCH ON ORIGINAL DRAWING
0 1"
IF NOT ONE INCH ON THIS SHEET, ADJUST SCALES ACCORDINGLY

Professional Engineer
68430
PHANI KIRAN PEDDINTI
DATE SIGNED 02-23-2022
ARIZONA U.S.A.

Sheet No. **E-3.13**

AGENCY REVIEW

XREFS: XC-SITE; C-GRID; TB-WE-D; C-SITE; XE-SITE ELECT; E-SITE ELECT; SEAL-PKP; SIGN-PKP

G:\PROJECT\21007\CADD\DESIGN\ELECTRICAL\21007 E-3.13.DWG, 2/23/2022 12:49:03 PM, PPeddinti, 1:1

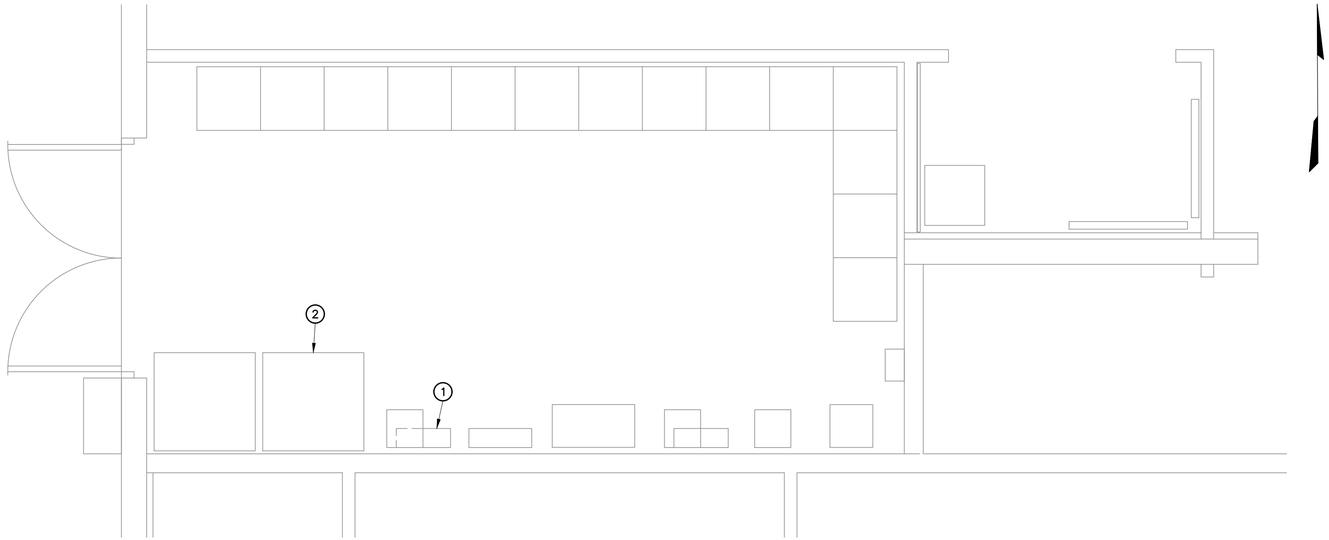

A ADMINISTRATION BULDING ELECTRICAL ROOM – ELECTRICAL PLAN
SCALE: 1/2"=1'-0"

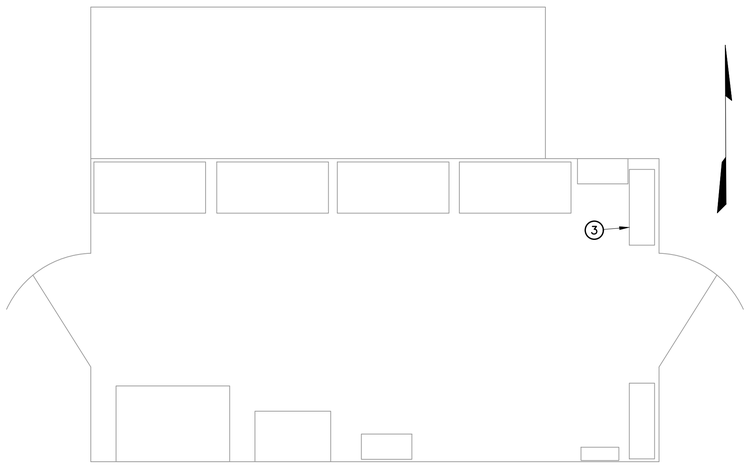

B EFFLUENT PUMP STATION CONTROL ROOM – ELECTRICAL PLAN
SCALE: 1/2"=1'-0"

0 1 2 4
1/2" = 1'-0"

KEYED NOTES

1. EXISTING LIGHTING PANEL PP–AD4
2. EXISTING ADMINISTRATION I/O CABINET I/O ADM
3. EXISTING LIGHTING PANEL PP–EFF

NOTES:

1. NO WORK TO COMMENCE WITHOUT APPROVED MOPO.
2. SEE SHEET E–2.05 FOR PP–ADM4 AND PP–EFF PANEL SCHEDULES AND ELECTRICAL WORKS REQUIREMENT.
3. SEE SHEET E–5.01 AND E–5.17 FOR POWER AND CONTROLS CONDUIT BLOCK DIAGRAMS.

1620 West Fountainhead Pkwy
Suite 501
Tempe, Arizona 85282
Phone: (480) 893-8860

Improving Arizona's Infrastructure Since 1942

WILSON ENGINEERS

CITY OF CHANDLER
RECLAIMED WATER INTERCONNECT FACILITY
AWRF – ADMIN BLDG ELECTRICAL ROOM AND EFFLUENT PUMP STA CONTROL ROOM ELECTRICAL PLANS – MODIFICATIONS
CITY PROJECT NO. WW1901.203
WILSON PROJECT NO. 21007

Design: ER	Drawn: ER	Checked: PKP
Date: 02/2022	Wilson Project No.: 21007	

Revision	Date	Description	By

VERIFY SCALES
BAR IS ONE INCH ON ORIGINAL DRAWING
0 1"
IF NOT ONE INCH ON THIS SHEET, ADJUST SCALES ACCORDINGLY

Professional Engineer
68430
PHANI KIRAN PEDDINTI
DATE SIGNED 02-23-2022
ARIZONA U.S.A.

Sheet No. **E–3.14**

AGENCY REVIEW

XREFS: XC–SITE; C–GRID; TB–WE–D; C–SITE; XE–SITE ELECT; E–SITE ELECT; CP–ROAD; 8869A10–03–080–100; SEAL–PKP; SIGN–PKP

G:\PROJECT\21007\CADD\DESIGN\ELECTRICAL\21007 E–3.14.DWG, 2/23/2022 12:49:06 PM, PPeddinti, 1:1

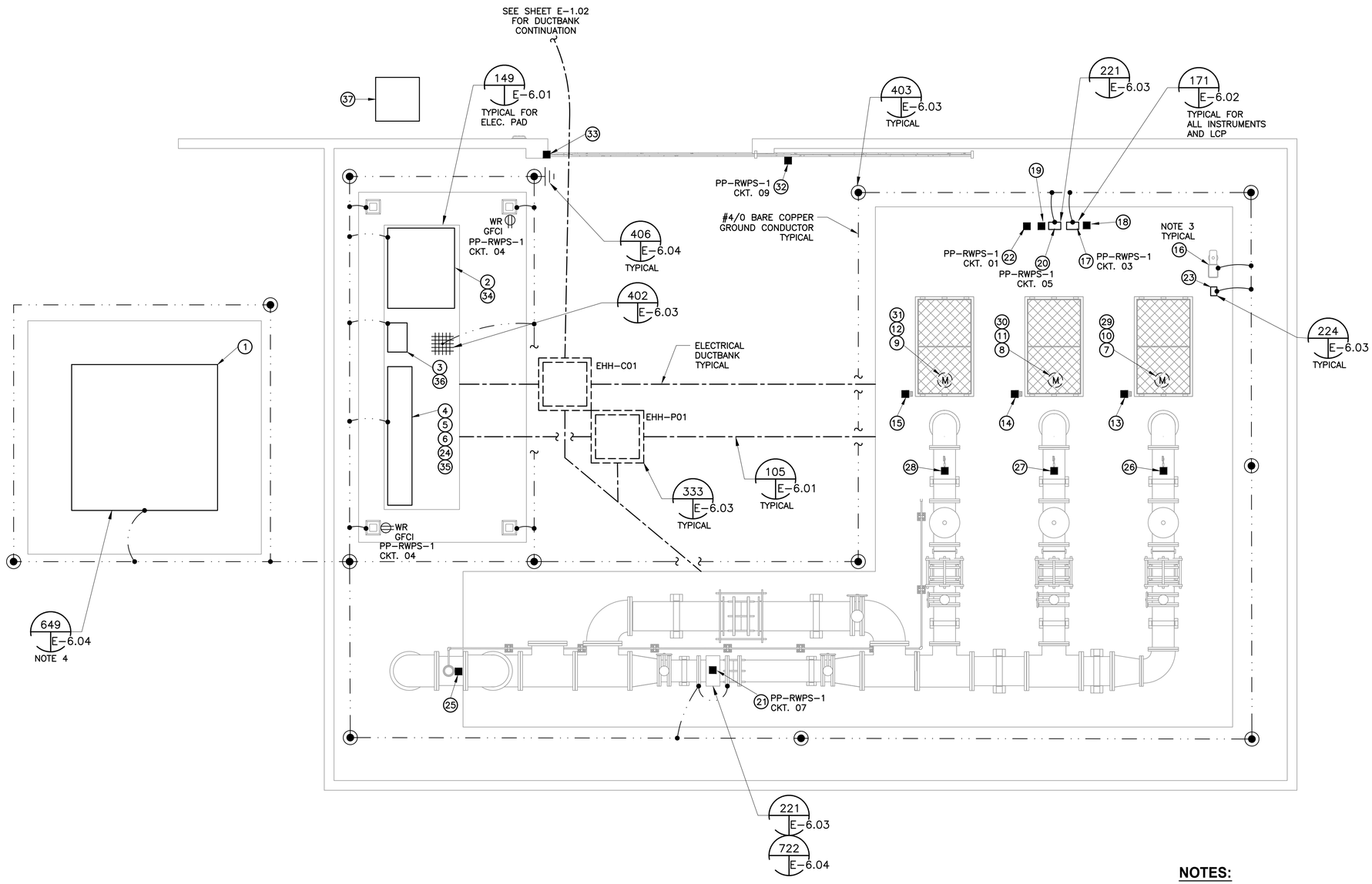

A ~ SRP RAW WATER PUMP STATION PLAN

SCALE: 1/4"=1'-0"

NOTES:

1. SEE SHEET E-2.06 FOR MCC-RWPS-1 SINGLE LINE DIAGRAM AND PP-RWPS-1 PANEL SCHEDULE.
2. TIE ALL EQUIPMENT GROUNDS TO RAW WATER PUMP STATION GROUNDING GRID.
3. COORDINATE WITH UTILITY FOR ADDITIONAL ELECTRICAL REQUIREMENTS.
4. SEE SHEETS E-5.05 AND E-5.17 FOR POWER AND CONTROLS CONDUIT BLOCK DIAGRAMS.

0 2 4 8

1/4" = 1'-0"

KEYED NOTES

1. UTILITY TRANSFORMER
2. SERVICE ENTRANCE SECTION SES-RWPS-1
3. MANUAL TRANSFER SWITCH MTS-RWPS
4. MOTOR CONTROL CENTER MCC-RWPS-1
5. DRY TYPE TRANSFORMER XFMR-L-RWPS1
6. LIGHTING PANEL PP-RWPS-1
7. RAW WATER PUMP NO. 1 PMP-RW-100
8. RAW WATER PUMP NO. 2 PMP-RW-200
9. RAW WATER PUMP NO. 3 (STANDBY) PMP-RW-300
10. RW PUMP NO. 1 MOTOR TEMPERATURE SWITCH, TS-RW-100
11. RW PUMP NO. 2 MOTOR TEMPERATURE SWITCH, TS-RW-200
12. RW PUMP NO. 3 MOTOR TEMPERATURE SWITCH, TS-RW-300
13. RW PUMP NO. 1 EMERGENCY STOP ES-RW-100
14. RW PUMP NO. 2 EMERGENCY STOP ES-RW-200
15. RW PUMP NO. 3 EMERGENCY STOP ES-RW-300
16. RW INLET SLIDE GATE ACTUATOR EDR-RW-001
17. RW PUMP STATION LEVEL TRANSMITTER LIT-RW-003
18. RW PUMP STATION LEVEL ELEMENT LE-RW-003
19. RW PUMP STATION LOW LOW LEVEL SWITCH, LSLL-RW-004
20. RW PUMP STATION LEVEL LOCAL CONTROL PANEL, LCP-RW-008
21. RW PUMP STATION DISCHARGE FLOW METER, FIT/FE-RW-012
22. RW PUMP STATION TURBIDITY ANALYZER AIT/AE-RW-002
23. RW PUMP STATION INLET SLIDE GATE DISCONNECT SWITCH, DSC-RW-001
24. POWER QUALITY METER PQM-RWPS-1
25. RW PUMPS COMMON DISCHARGE LOW FLOW SWITCH, FSL-RW-014
26. RW PUMP NO. 1 DISCHARGE PRESSURE SWITCH, PS-RW-101
27. RW PUMP NO. 2 DISCHARGE PRESSURE SWITCH, PS-RW-201
28. RW PUMP NO. 3 DISCHARGE PRESSURE SWITCH, PS-RW-301
29. RW PUMP NO. 1 MOTOR MOISTURE LEAK SWITCH, US-RW-100
30. RW PUMP NO. 2 MOTOR MOISTURE LEAK SWITCH, US-RW-200
31. RW PUMP NO. 3 MOTOR MOISTURE LEAK SWITCH, US-RW-300
32. RW PUMP STATION GATE OPERATOR GO-RW-015
33. RW PUMP STATION GATE INTRUSION SWITCH, ZS-RW-016
34. RW PUMP STATION SES-RWPS-1 INTRUSION SWITCH, ZS-RW-017A
35. RW PUMP STATION MCC-RWPS-1 INTRUSION SWITCH, ZS-RW-017B
36. RW PUMP STATION MTS-RWPS-1 INTRUSION SWITCH, ZS-RW-017C
37. PORTABLE GENERATOR CONNECTION CABINET

1620 West Fountainhead Pkwy
Suite 501
Tempe, Arizona 85282
Phone: (480) 893-8860

Improving Arizona's Infrastructure Since 1942

WILSON ENGINEERS

CITY OF CHANDLER
RECLAIMED WATER INTERCONNECT FACILITY
SRP CANAL RAW WATER PUMP STATION ELECTRICAL POWER PLAN

CITY PROJECT NO. WW1901.203
WILSON PROJECT NO. 21007

Design: ER	Drawn: ER	Checked: PKP
Date: 02/2022	Wilson Project No.: 21007	

Revision	Date	Description	By

VERIFY SCALES
BAR IS ONE INCH ON ORIGINAL DRAWING
0 1"
IF NOT ONE INCH ON THIS SHEET, ADJUST SCALES ACCORDINGLY

Registered Professional Engineer
68430
PHANI KIRAN PEDDINTI
SIGNED 02-23-2022
ARIZONA U.S.A.

Sheet No. **E-3.15**

AGENCY REVIEW

XREFS: XC-SITE; C-GRID; TB-WE-D; C-SITE; E-SITE ELECT; SEAL-PKP; SIGN-PKP

G:\PROJECT\21007\CADD\DESIGN\ELECTRICAL\21007 E-3.15.DWG, 2/23/2022 12:49:13 PM, PPeddinti, 1:1

NOTES:

1. SEE SHEET E-2.06 FOR PP-RWPS-1 PANEL SCHEDULE.
2. SEE SHEET E-0.01 FOR LIGHTING FIXTURE SCHEDULE.
3. SEE SHEET E-3.15 FOR RWPS POWER PLAN.
4. SEE SHEET E-5.05 FOR POWER CONDUIT BLOCK DIAGRAM.

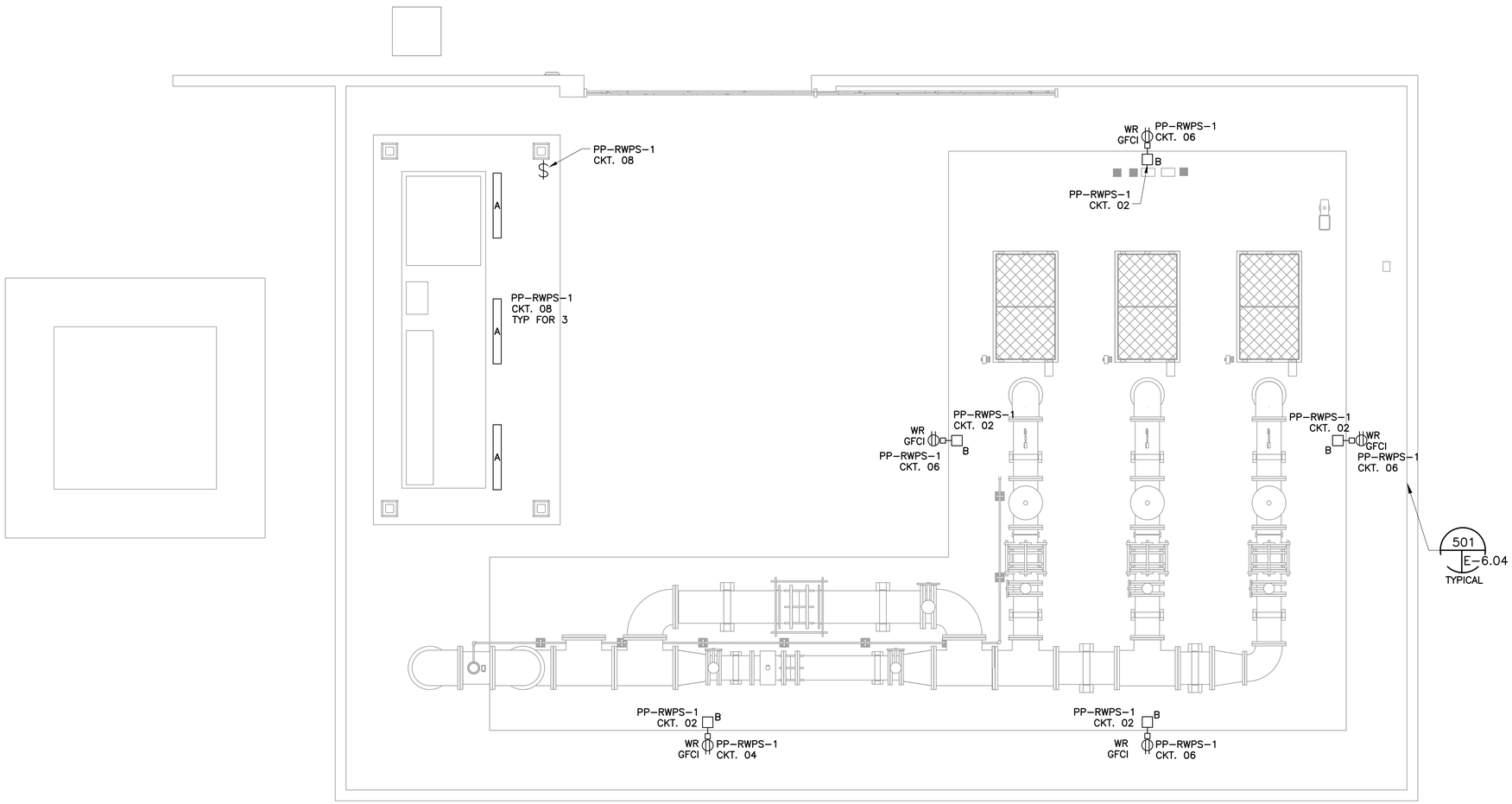

A SRP RAW WATER PUMP STATION PLAN
SCALE: 1/4"=1'-0"

0 2 4 8
1/4" = 1'-0"

AGENCY REVIEW

1620 West Fountainhead Pkwy
Suite 501
Tempe, Arizona 85282
Phone: (480) 893-8860

Improving Arizona's Infrastructure Since 1942

WILSON ENGINEERS

CITY OF CHANDLER
RECLAIMED WATER INTERCONNECT FACILITY
SRP CANAL RAW WATER PUMP STATION
ELECTRICAL LIGHTING PLAN

CITY PROJECT NO. WW1901.203
WILSON PROJECT NO. 21007

Design: ER
Date: 02/2022
Drawn: ER
Wilson Project No.: 21007
Checked: PKP

Revision	Date	Description	By

VERIFY SCALES
BAR IS ONE INCH ON ORIGINAL DRAWING
0 1"
IF NOT ONE INCH ON THIS SHEET, ADJUST SCALES ACCORDINGLY

Professional Engineer Certificate
68430
PHANI KIRAN PEDDINTI
DATE SIGNED 02-23-2022
ARIZONA U.S.A.

Sheet No. **E-3.16**

XREFS: XC-SITE; C-GRID; TB-WE-D; C-SITE; SEAL-PKP; SIGN-PKP

G:\PROJECT\21007\CADD\DESIGN\ELECTRICAL\21007 E-3.16.DWG, 2/23/2022 12:49:18 PM, PPeddinti, 1:1

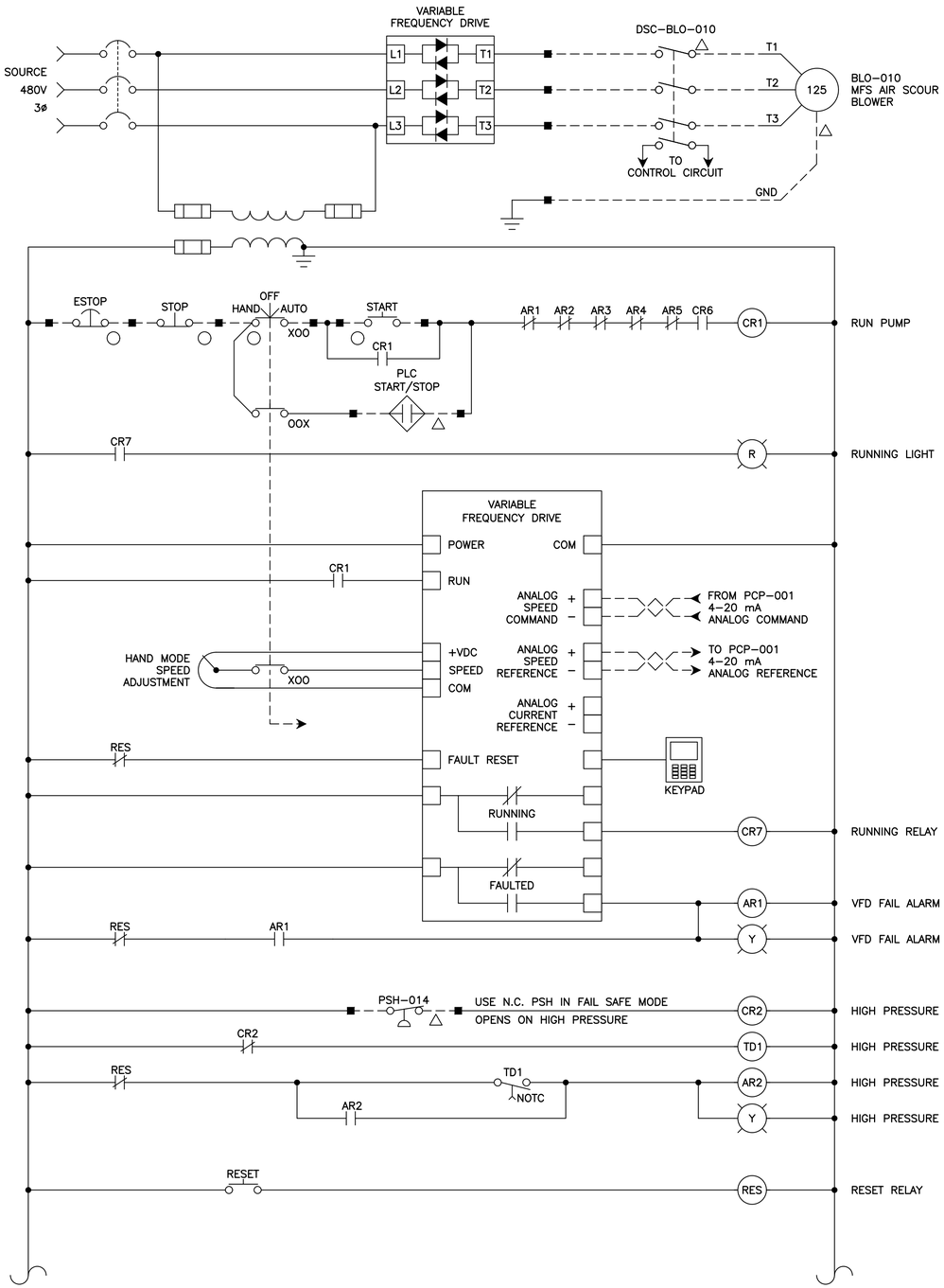

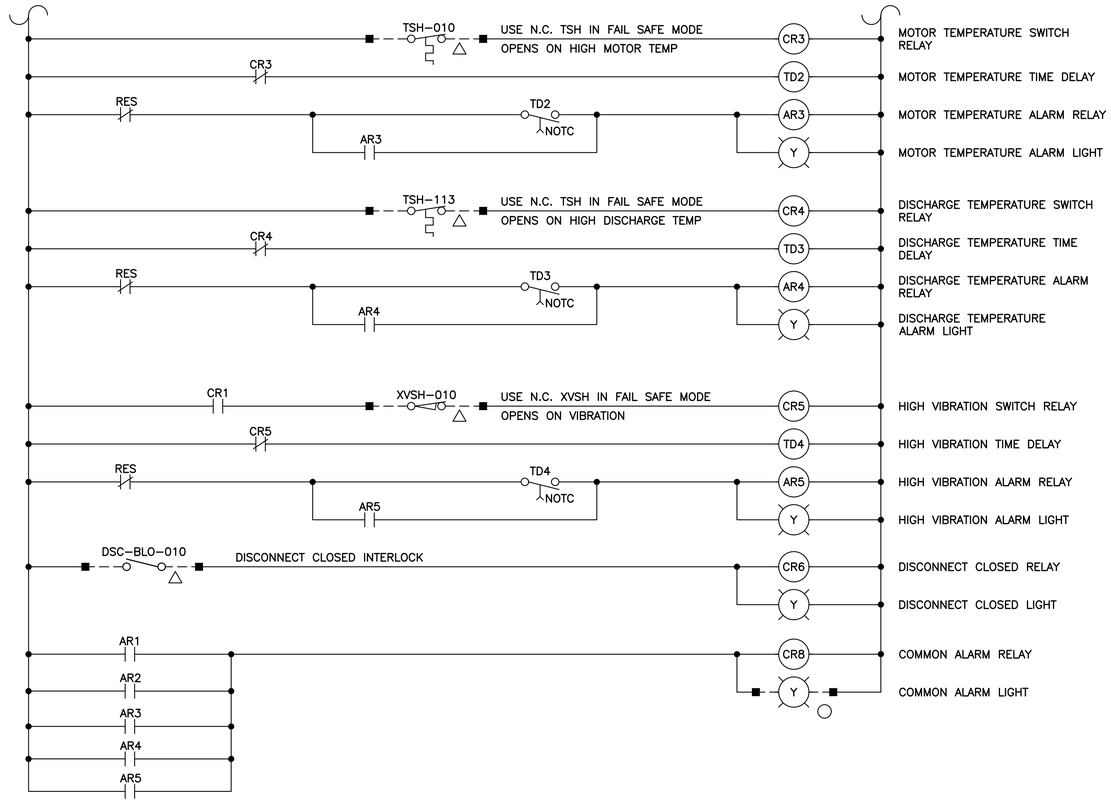

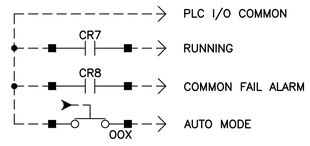

NOTES:

1. SEE SHEET E-2.03 FOR MCC-RWIF SINGLE LINE DIAGRAM.
2. SEE SHEETS E-3.02 AND E-3.07 FOR EQUIPMENT LOCATIONS.
3. SEE SHEETS E-5.01 THRU E-5.17 FOR POWER AND CONTROLS CONDUIT BLOCK DIAGRAMS.

LEGEND:

- ■ INDICATES EXTERNAL TERMINATION POINT
- △ INDICATES FIELD DEVICE
- ○ INDICATES DEVICE AT LCP

A ~ AIR SCOUR BLOWER BLO-010 VFD SCHEMATIC DIAGRAM
TYPICAL FOR BLO-020

1620 West Fountainhead Pkwy
Suite 501
Tempe, Arizona 85282
Phone: (480) 893-8860
Improving Arizona's Infrastructure Since 1942

WILSON ENGINEERS

CITY OF CHANDLER
RECLAIMED WATER INTERCONNECT FACILITY

MFS AIR SCOUR BLOWER SCHEMATIC DIAGRAM

CITY PROJECT NO. WW1901.203
WILSON PROJECT NO. 21007

Design: ER	Drawn: ER	Checked: PKP		
Date: 02/2022	Wilson Project No.: 21007			
Revision	Date	Description	By	

VERIFY SCALES
BAR IS ONE INCH ON ORIGINAL DRAWING
0 1"
IF NOT ONE INCH ON THIS SHEET, ADJUST SCALES ACCORDINGLY



Sheet No. **E-4.01**

AGENCY REVIEW

NOTES:

1. SEE SHEET E-2.03 FOR MCC-RWIF SINGLE LINE DIAGRAM.
2. SEE SHEETS E-3.02 AND E-3.04 FOR EQUIPMENT LOCATIONS.
3. SEE SHEETS E-5.01 THRU E-5.17 FOR POWER AND CONTROLS CONDUIT BLOCK DIAGRAMS.

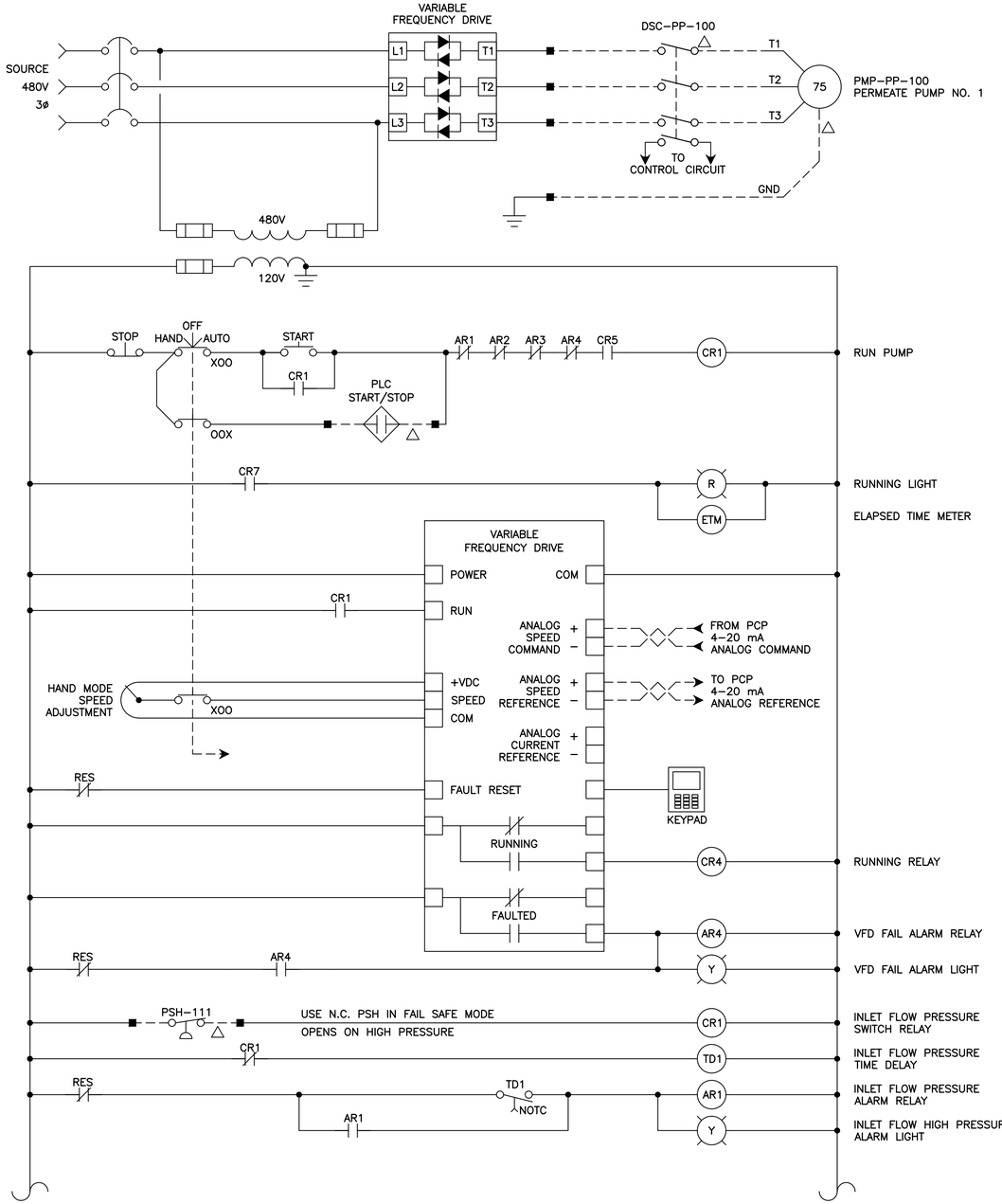

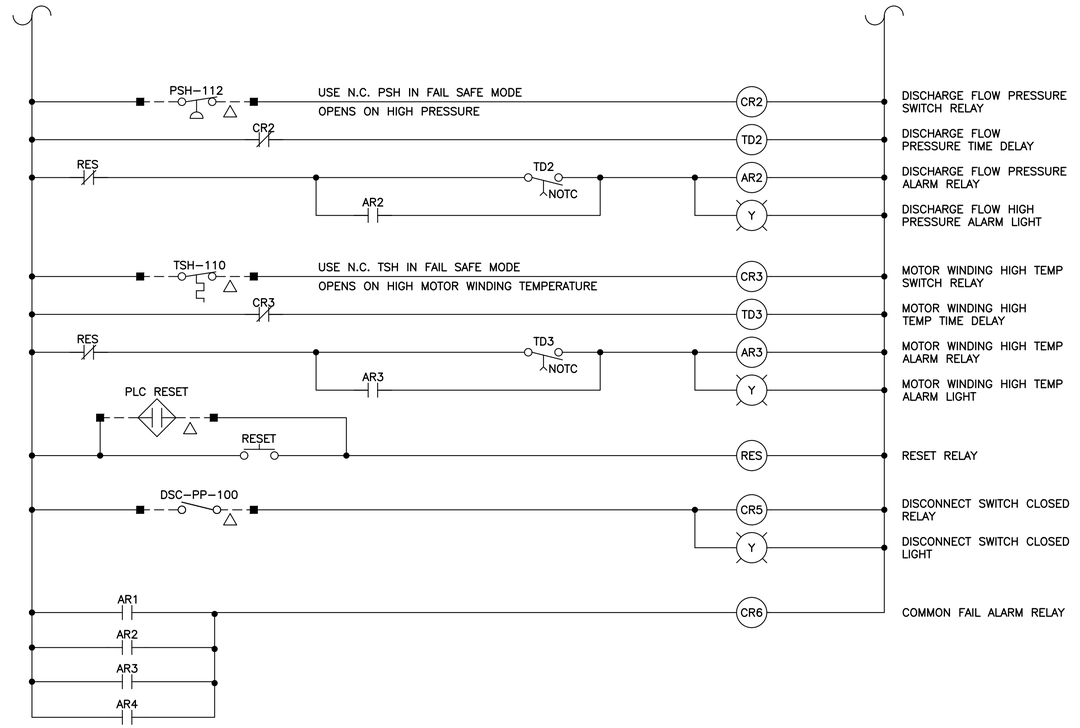

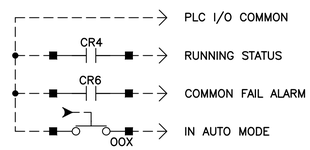

A ~ MEMBRANE FILTRATION SYSTEM
PERMEATE PUMP PMP-PP-100 VFD SCHEMATIC DIAGRAM
TYPICAL FOR PMP-PP-200 AND PMP-PP-300

1620 West Fountainhead Pkwy
Suite 501
Tempe, Arizona 85282
Phone: (480) 893-8860
Improving Arizona's Infrastructure Since 1942

WILSON ENGINEERS

CITY OF CHANDLER
RECLAIMED WATER INTERCONNECT FACILITY

MFS PERMEATE PUMP
SCHEMATIC DIAGRAM

CITY PROJECT NO. WW1901.203
WILSON PROJECT NO. 21007

Revision	Date	Description	By

Design: PKP
Date: 02/2022
Drawn: CRG
Wilson Project No.: 21007
Checked: MAC

VERIFY SCALES
BAR IS ONE INCH ON ORIGINAL DRAWING
0 1"
IF NOT ONE INCH ON THIS SHEET, ADJUST SCALES ACCORDINGLY



Sheet No. **E-4.02**

XREFS: TB-WF-D; SEAL-PKP; SIGN-PKP

G:\PROJECT\21007\CADD\DESIGN\ELECTRICAL\21007 E-4.02.DWG, 2/23/2022 12:49:24 PM, PPeddinti, 1:1

AGENCY REVIEW

NOTES:

1. SEE SHEET E-2.03 FOR MCC-RWIF SINGLE LINE DIAGRAM.
2. SEE SHEETS E-3.02 AND E-3.04 FOR EQUIPMENT LOCATIONS.
3. SEE SHEETS E-5.01 THRU E-5.17 FOR POWER AND CONTROL CONDUIT BLOCK DIAGRAMS.

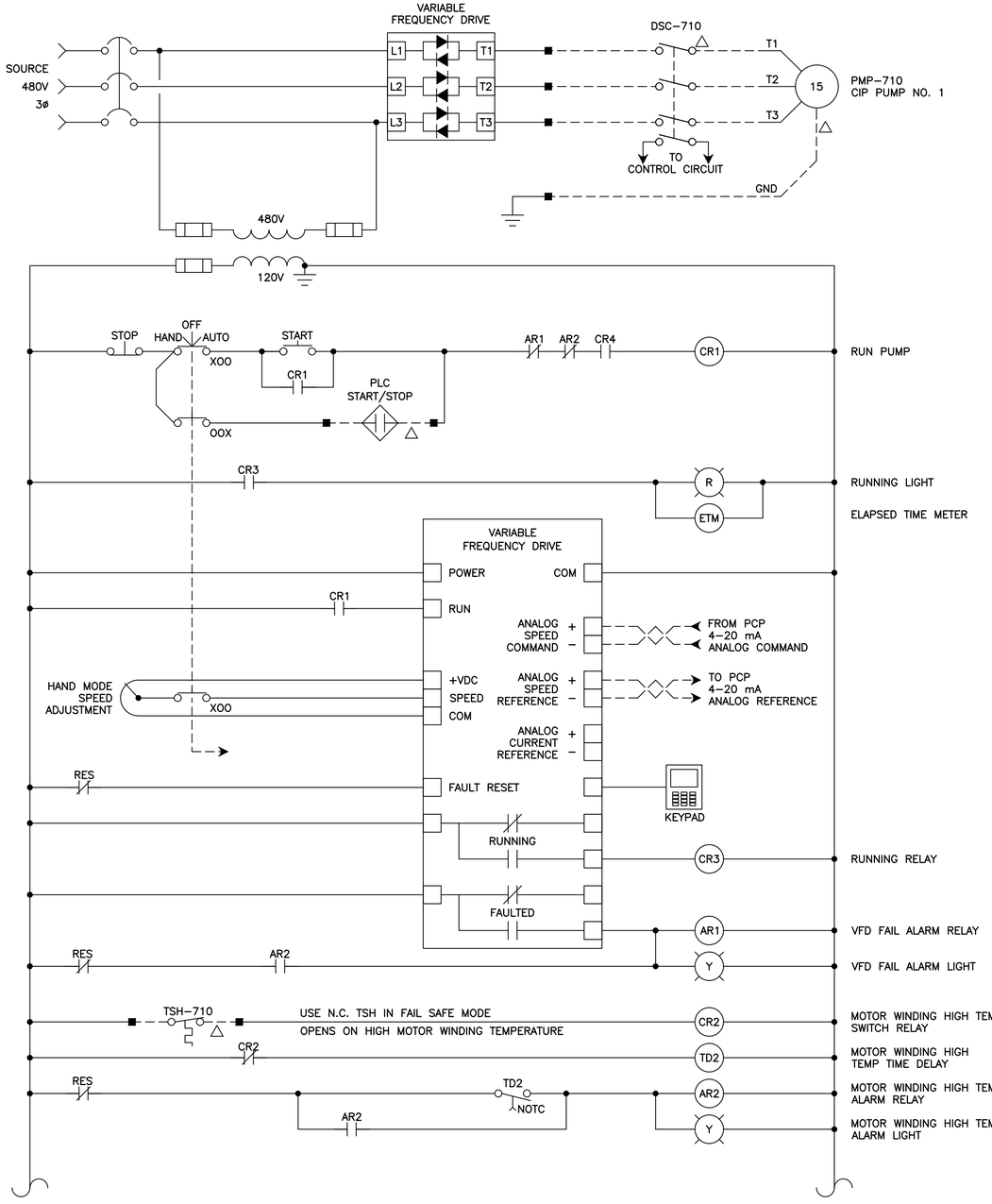

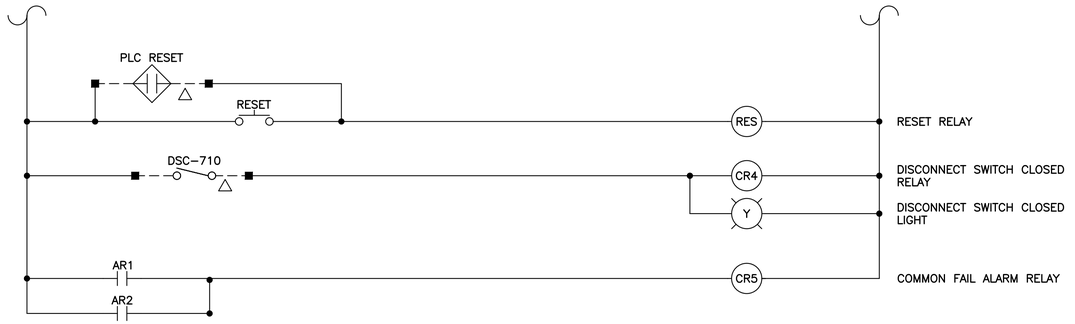

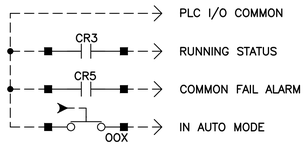

A ~ MEMBRANE FILTRATION SYSTEM
CIP PUMP PMP-710 VFD SCHEMATIC DIAGRAM
TYPICAL FOR PMP-720

1620 West Fountainhead Pkwy
Suite 501
Tempe, Arizona 85282
Phone: (480) 893-8860
Improving Arizona's Infrastructure Since 1942

WILSON ENGINEERS

CITY OF CHANDLER
RECLAIMED WATER INTERCONNECT FACILITY

MFS CIP PUMP SCHEMATIC DIAGRAM

CITY PROJECT NO. WW1901.203
WILSON PROJECT NO. 21007

Design: PKP	Drawn: CRG	Checked: MAC
Date: 02/2022	Wilson Project No.: 21007	

Revision	Date	Description	By

VERIFY SCALES
BAR IS ONE INCH ON ORIGINAL DRAWING
0 1"
IF NOT ONE INCH ON THIS SHEET, ADJUST SCALES ACCORDINGLY



Sheet No. **E-4.03**

XREFS: TB-WE-D; SEAL-PKP; SIGN-PKP

G:\PROJECT\21007\CADD\DESIGN\ELECTRICAL\21007 E-4.03.DWG, 2/23/2022 12:49:26 PM, PPeddinti, 1:1

AGENCY REVIEW

NOTES:

1. SEE SHEET E-3.09 FOR EQUIPMENT LOCATIONS.
2. SEE SHEETS E-5.01 THRU E-5.17 FOR POWER AND CONTROLS CONDUIT BLOCK DIAGRAMS.

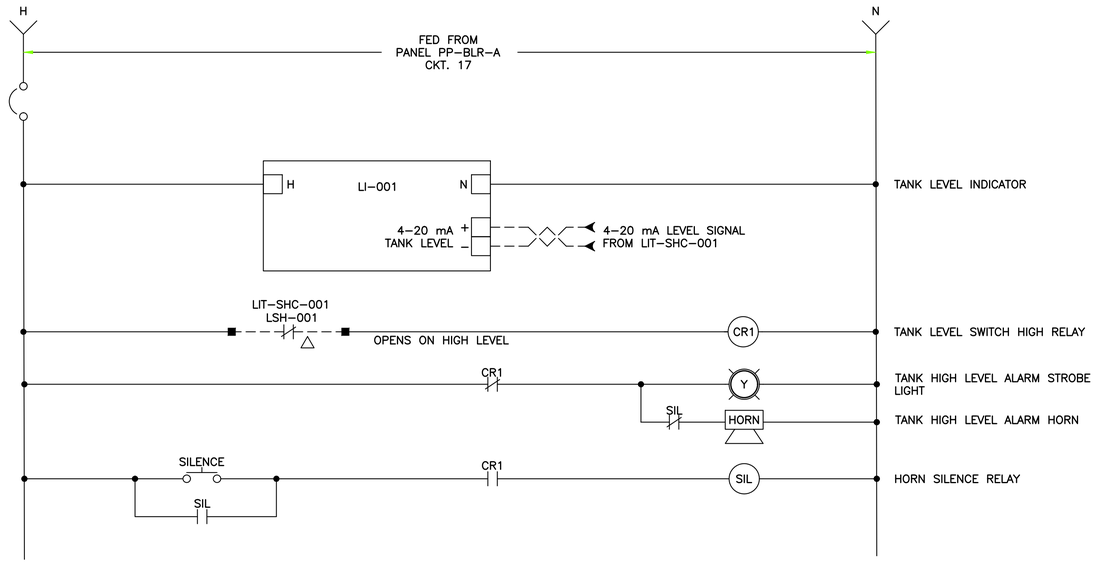

A SODIUM HYPOCHLORITE
FILL STATION PANEL LCP-SHC-001 SCHEMATIC DIAGRAM

LEGEND:

■ INDICATES EXTERNAL TERMINATION POINT

△ INDICATES FIELD DEVICE

1620 West Fountainhead Pkwy
Suite 501
Tempe, Arizona 85282
Phone: (480) 893-8860

Improving Arizona's
Infrastructure Since 1942

WILSON ENGINEERS

CITY OF CHANDLER
RECLAIMED WATER INTERCONNECT FACILITY

SODIUM HYPOCHLORITE
FILL STATION LCP-SHC-001
SCHEMATIC DIAGRAM

CITY PROJECT NO. WW1901.203
WILSON PROJECT NO. 21007

Design: ER
Date: 02/2022
Drawn: ER
Wilson Project No.: 21007
Checked: PKP

Revision	Date	Description	By

VERIFY SCALES
BAR IS ONE INCH ON ORIGINAL DRAWING
0 1"
IF NOT ONE INCH ON THIS SHEET, ADJUST SCALES ACCORDINGLY

68430
PHANI KIRAN
PEDDINTI
ARIZONA U.S.A.
DATE SIGNED 02-23-2022

Sheet No. **E-4.04**

G:\PROJECT\21007\CADD\DESIGN\ELECTRICAL\21007 E-4.04.DWG, 2/23/2022 12:49:29 PM, PPeddinti, 1:1

AGENCY REVIEW

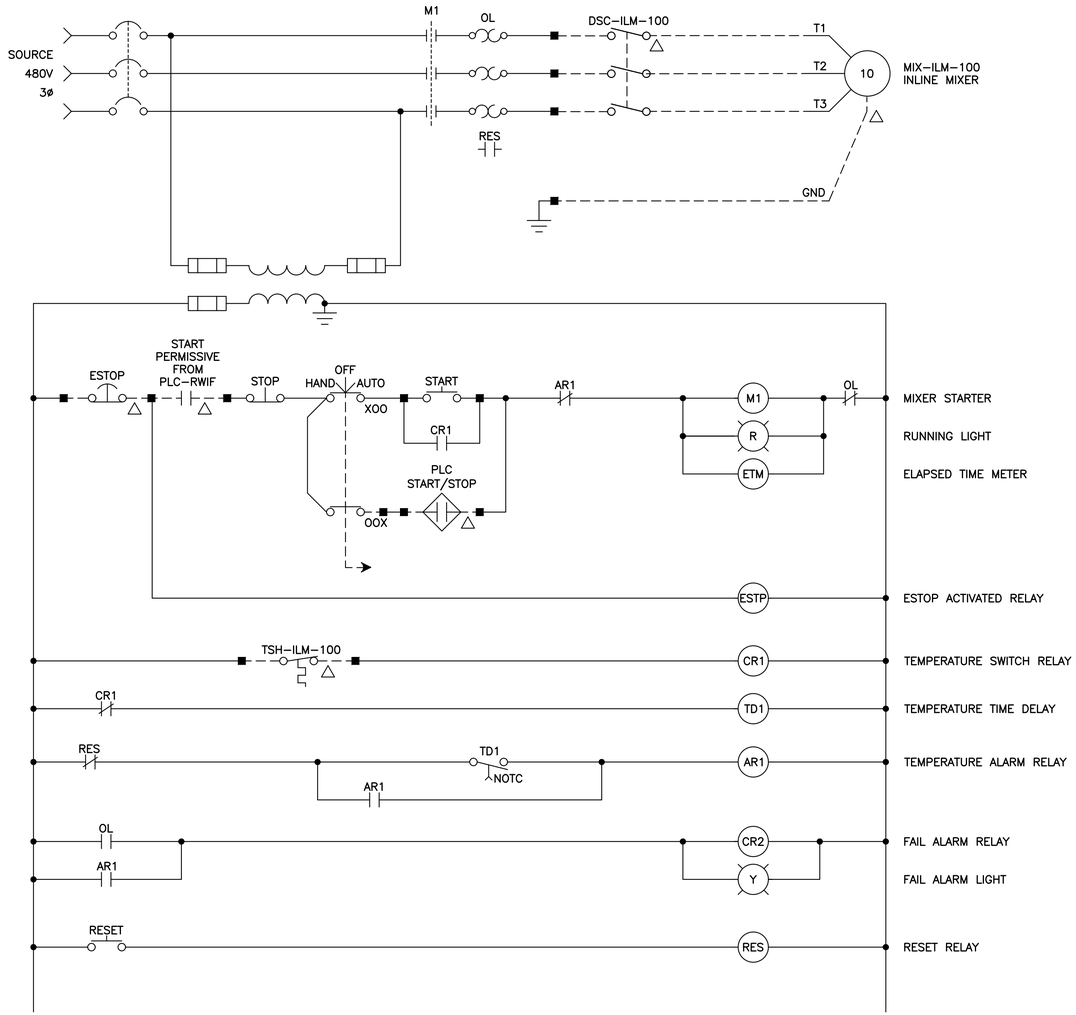

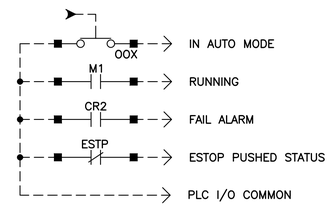

A ~ INLINE MIXER SCHEMATIC DIAGRAM

NOTES:

1. SEE SHEET E–2.03 FOR MCC–RWIF SINGLE LINE DIAGRAM.
2. SEE SHEETS E–3.02 AND E–3.04 FOR EQUIPMENT LOCATIONS.
3. SEE SHEETS E–5.01 THRU E–5.17 FOR POWER AND CONTROLS CONDUIT BLOCK DIAGRAMS.

LEGEND:

■ INDICATES EXTERNAL TERMINATION POINT

△ INDICATES FIELD DEVICE

1620 West Fountainhead Pkwy
Suite 501
Tempe, Arizona 85282
Phone: (480) 893–8860
Improving Arizona's Infrastructure Since 1942

WILSON ENGINEERS

CITY OF CHANDLER
RECLAIMED WATER INTERCONNECT FACILITY

INLINE MIXER
SCHEMATIC DIAGRAM

CITY PROJECT NO. WW1901.203
WILSON PROJECT NO. 21007

Design: ER	Drawn: ER	Checked: PKP
Date: 02/2022	Wilson Project No.: 21007	

Revision	Date	Description	By

VERIFY SCALES
BAR IS ONE INCH ON ORIGINAL DRAWING
0 1"
IF NOT ONE INCH ON THIS SHEET, ADJUST SCALES ACCORDINGLY

Professional Engineer
68430
PHANI KIRAN PEDDINTI
DATE SIGNED 02-23-2022
ARIZONA U.S.A.

Sheet No. **E–4.05**

G:\PROJECT\21007\CADD\DESIGN\ELECTRICAL\21007 E–4.05.DWG, 2/23/2022 12:49:32 PM, PPeddinti, 1:1

AGENCY REVIEW

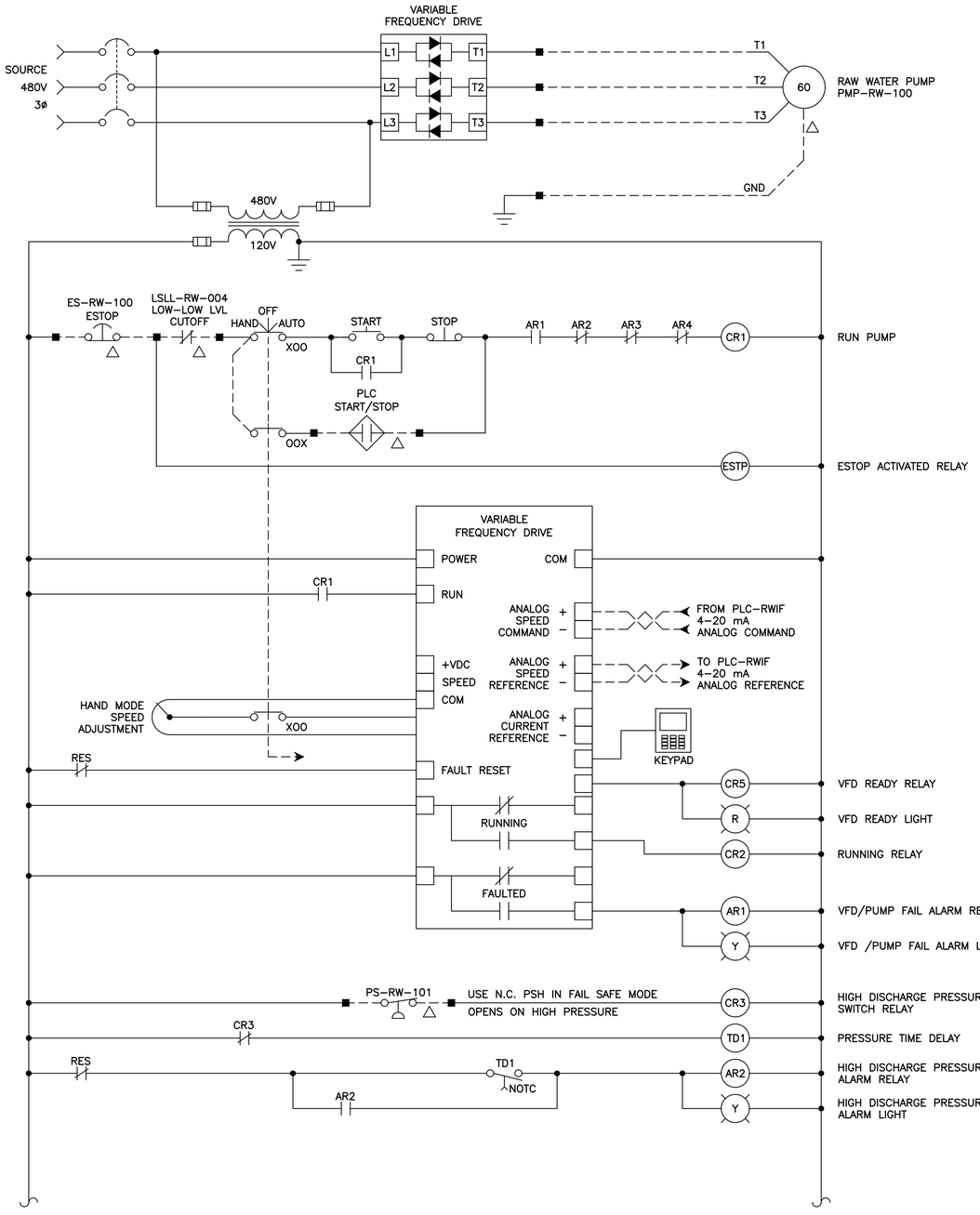

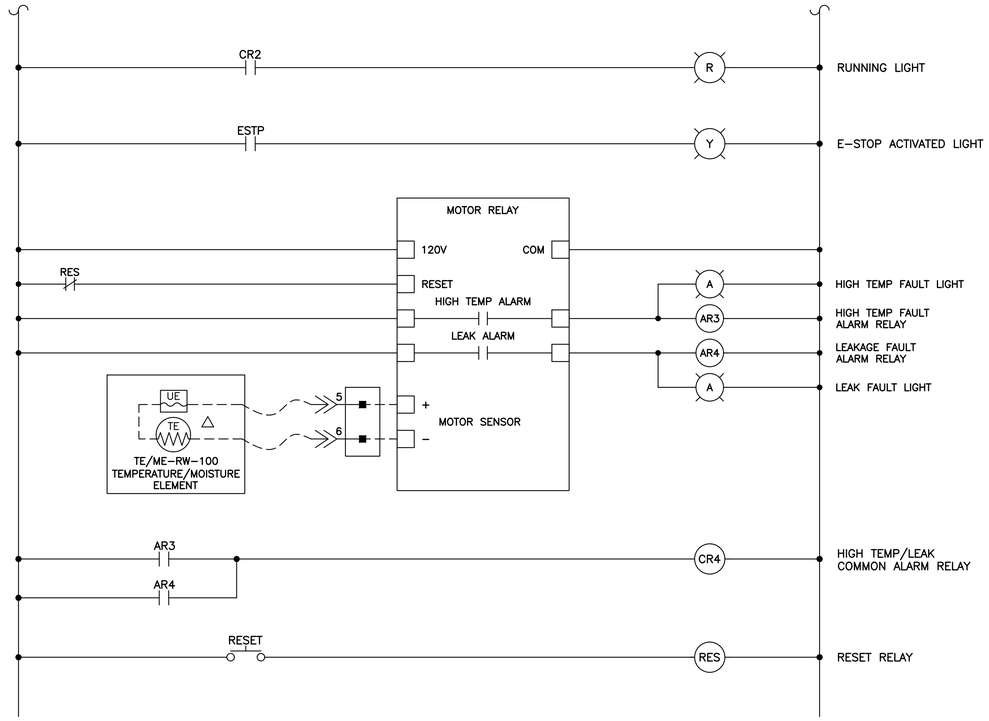

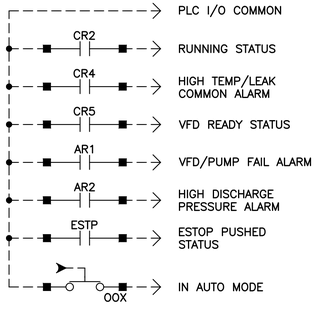

NOTES:

1. SEE SHEET E-2.05 FOR MCC-RWPS-1 SINGLE LINE DIAGRAM.
2. SEE SHEETS E-3.02 AND E-3.15 FOR EQUIPMENT LOCATIONS.
3. SEE SHEETS E-5.01 THRU E-5.17 FOR POWER AND CONTROLS CONDUIT BLOCK DIAGRAMS.

LEGEND:

■ INDICATES EXTERNAL TERMINATION POINT

△ INDICATES FIELD DEVICE

A ~ RAW WATER PUMP VFD SCHEMATIC DIAGRAM

TYPICAL FOR PMP-RW-200 AND PMP-RW-300

1620 West Fountainhead Pkwy
Suite 501
Tempe, Arizona 85282
Phone: (480) 893-8860
Improving Arizona's Infrastructure Since 1942

WILSON ENGINEERS

CITY OF CHANDLER
RECLAIMED WATER INTERCONNECT FACILITY

RAW WATER PUMP SCHEMATIC DIAGRAM

CITY PROJECT NO. WW1901.203
WILSON PROJECT NO. 21007

Design: ER	Drawn: ER	Checked: PKP
Date: 02/2022	Wilson Project No.: 21007	

Revision	Date	Description	By

VERIFY SCALES
BAR IS ONE INCH ON ORIGINAL DRAWING
0 1"
IF NOT ONE INCH ON THIS SHEET, ADJUST SCALES ACCORDINGLY

Registered Professional Engineer
68430
PHANI KIRAN PEDDINTI
DATE SIGNED 02-23-2022
ARIZONA U.S.A.

Sheet No. **E-4.06**

G:\PROJECT\21007\CADD\DESIGN\ELECTRICAL\21007 E-4.06.DWG, 2/23/2022 12:49:35 PM, PPeddinti, 1:1

AGENCY REVIEW

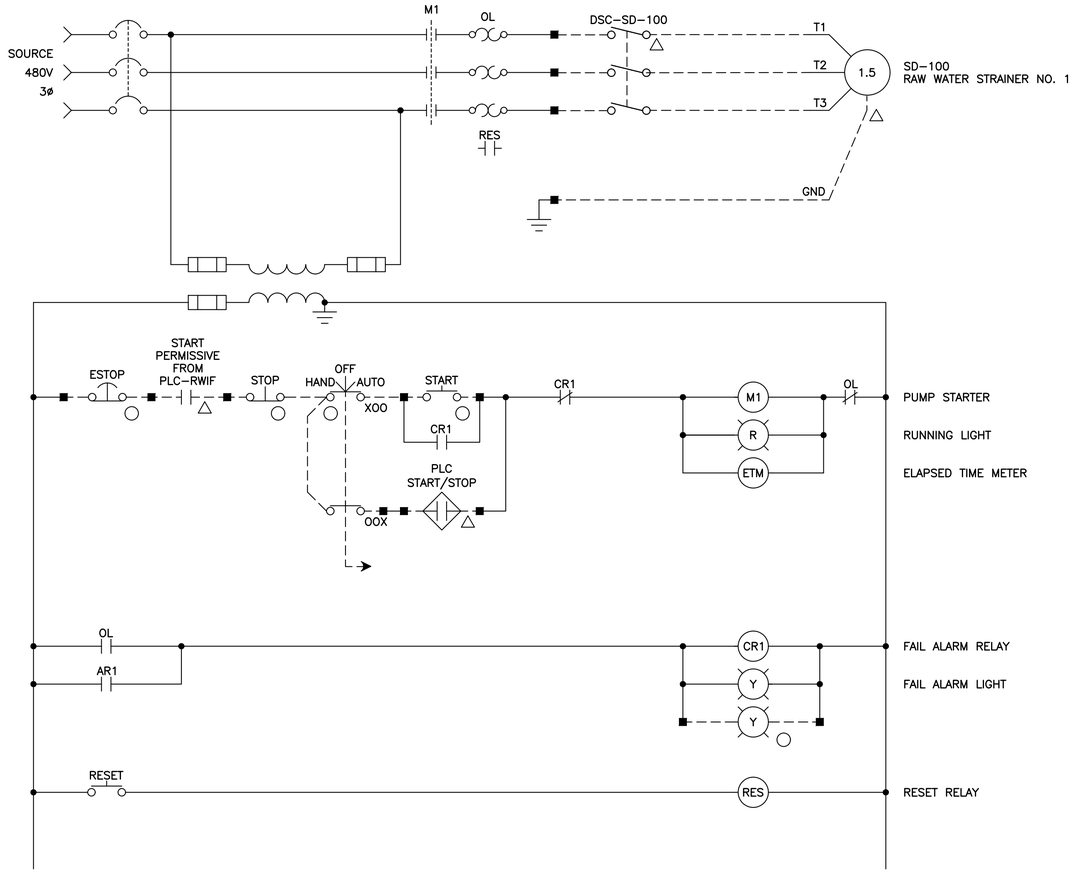

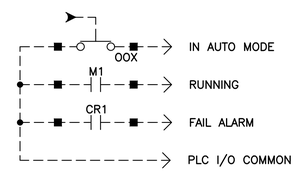

A
~
RAW WATER STRAINER SCHEMATIC DIAGRAM
TYPICAL FOR SD-200 & SD-300

NOTES:

1. SEE SHEET E-2.03 FOR MCC-RWIF SINGLE LINE DIAGRAM.
2. SEE SHEETS E-3.02 AND E-3.04 FOR EQUIPMENT LOCATIONS.
3. SEE SHEETS E-5.01 THRU E-5.17 FOR POWER AND CONTROLS CONDUIT BLOCK DIAGRAMS.

LEGEND:

- ■ INDICATES EXTERNAL TERMINATION POINT
- △ INDICATES FIELD DEVICE
- ○ INDICATES DEVICE AT LCP

1620 West Fountainhead Pkwy
Suite 501
Tempe, Arizona 85282
Phone: (480) 893-8860
Improving Arizona's Infrastructure Since 1942

WILSON ENGINEERS

CITY OF CHANDLER
RECLAIMED WATER INTERCONNECT FACILITY

RAW WATER STRAINER SCHEMATIC DIAGRAM

CITY PROJECT NO. WW1901.203
WILSON PROJECT NO. 21007

Design: ER	Drawn: ER	Checked: PKP
Date: 02/2022	Wilson Project No.: 21007	

Revision	Date	Description	By

VERIFY SCALES
BAR IS ONE INCH ON ORIGINAL DRAWING
0 1"
IF NOT ONE INCH ON THIS SHEET, ADJUST SCALES ACCORDINGLY

Registered Professional Engineer
68430
PHANI KIRAN PEDDINTI
DATE SIGNED 02-23-2022
STATE OF ARIZONA U.S.A.

Sheet No. **E-4.07**

AGENCY REVIEW

NOTES:

1. SEE SHEETS E-3.02 AND E-3.15 FOR EQUIPMENT LOCATIONS.
2. SEE SHEETS E-5.01 THRU E-5.17 FOR POWER AND CONTROLS CONDUIT BLOCK DIAGRAMS.

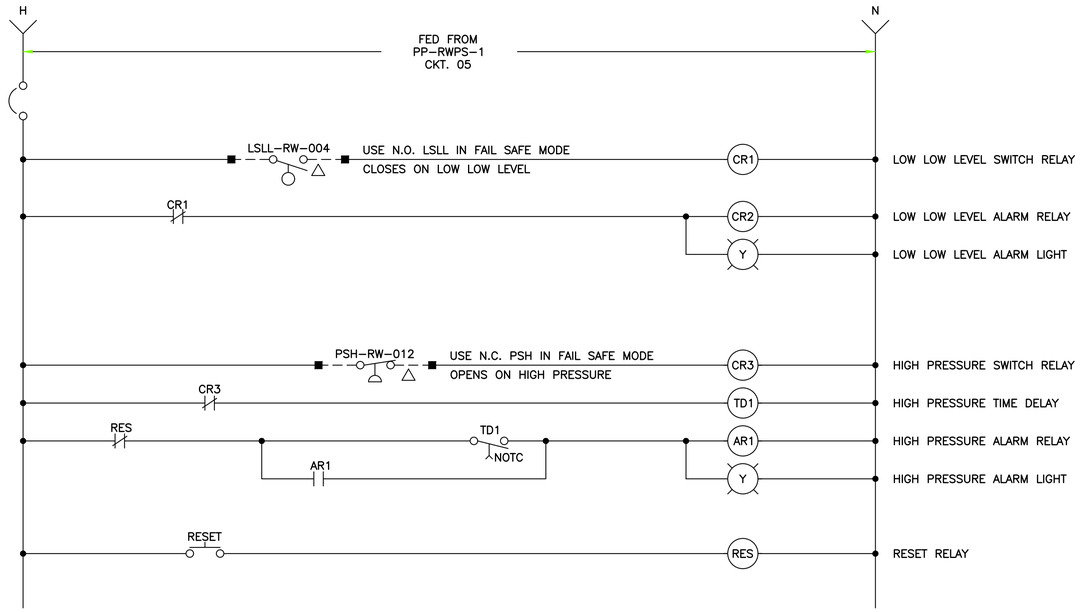

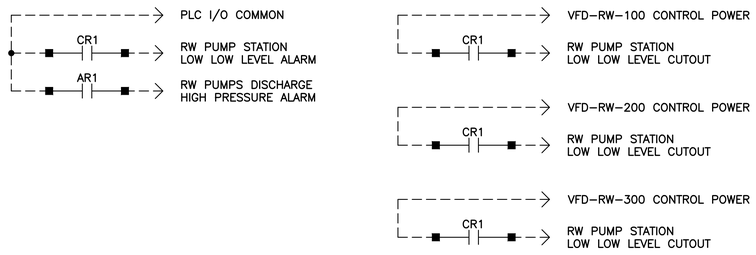

A ~ RAW WATER PUMP STATION LEVEL PANEL LCP-RW-008 SCHEMATIC DIAGRAM

LEGEND:

■ INDICATES EXTERNAL TERMINATION POINT

△ INDICATES FIELD DEVICE

1620 West Fountainhead Pkwy
Suite 501
Tempe, Arizona 85282
Phone: (480) 893-8860
Improving Arizona's Infrastructure Since 1942

WILSON ENGINEERS

CITY OF CHANDLER
RECLAIMED WATER INTERCONNECT FACILITY

RAW WATER PUMP STATION
LEVEL PANEL SCHEMATIC DIAGRAM

CITY PROJECT NO. WW1901.203
WILSON PROJECT NO. 21007

Design: ER	Drawn: ER	Checked: PKP
Date: 02/2022	Wilson Project No.: 21007	

Revision	Date	Description	By

VERIFY SCALES
BAR IS ONE INCH ON ORIGINAL DRAWING
0 1"
IF NOT ONE INCH ON THIS SHEET, ADJUST SCALES ACCORDINGLY

Professional Engineer
68430
PHANI KIRAN PEDDINTI
DATE SIGNED 02-23-2022
ARIZONA U.S.A.

Sheet No. **E-4.08**

G:\PROJECT\21007\CADD\DESIGN\ELECTRICAL\21007 E-4.08.DWG, 2/23/2022 12:49:40 PM, PPeddinti, 1:1

AGENCY REVIEW

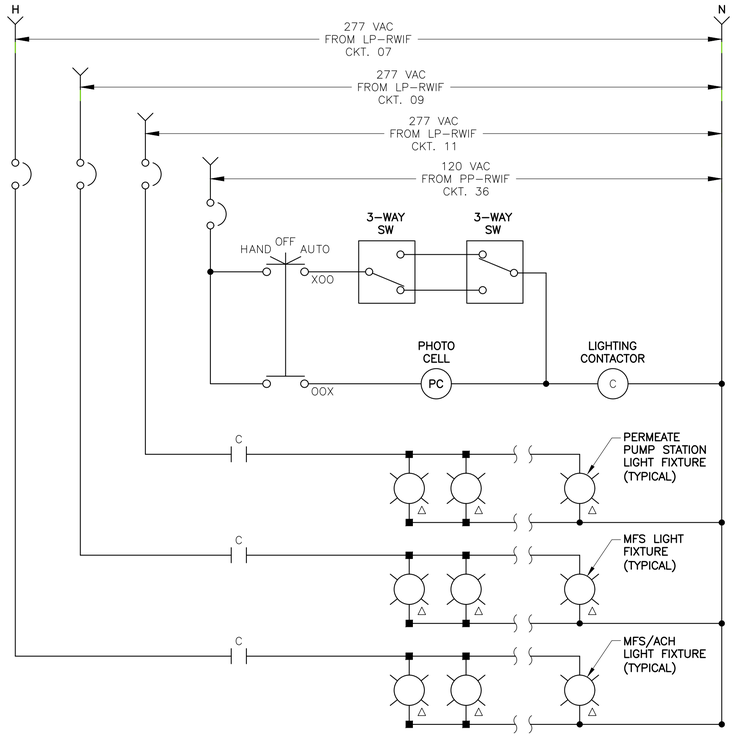

A ~ SMF LIGHTING CONTROL LC-MFS-100 SCHEMATIC DIAGRAM
NOTE 1

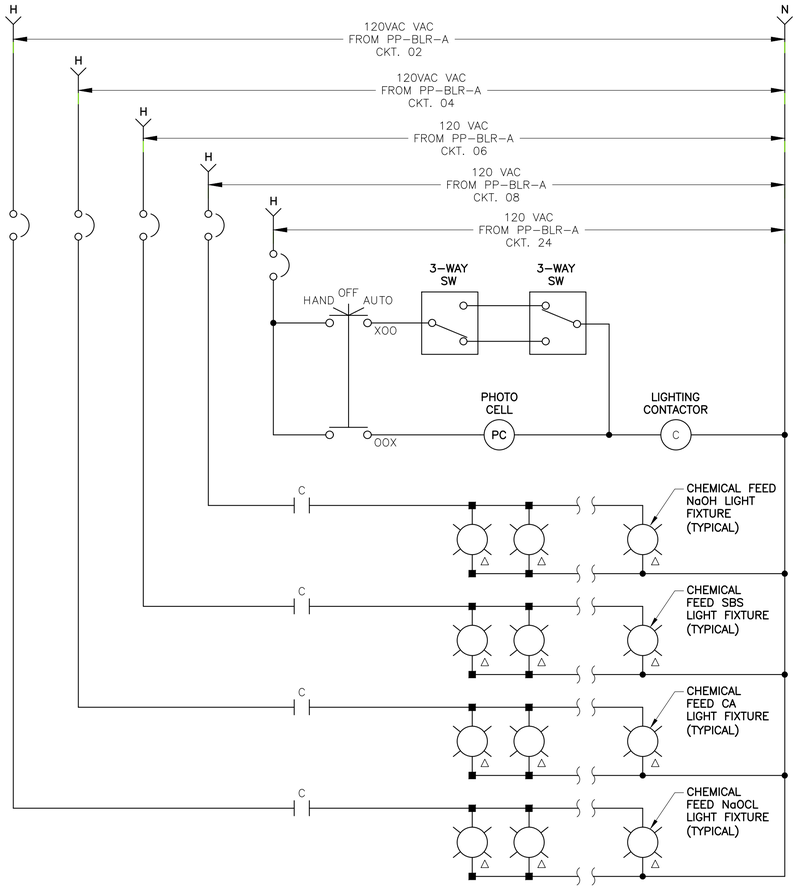

B ~ CHEMICAL FEED FACILITY LIGHTING CONTROL LC-CFF-100 SCHEMATIC DIAGRAM
NOTE 1

NOTES:

1. FURNISH WARNING SIGN "MULTIPLE SOURCE OF POWER" IN LIGHTING CONTROL PANEL DOOR.
2. SEE SHEETS E-3.06 AND E-3.11 FOR LIGHTING CONTROLS AND LIGHT FIXTURE LOCATIONS.
3. SEE SHEET E-2.05 FOR LP-RWIF PANEL SCHEDULE.
4. SEE SHEET E-2.04 FOR PP-RWIF AND PP-BLR-A PANEL SCHEDULES.
5. SEE SHEETS E-5.01 THRU E-5.17 FOR POWER AND CONTROLS CONDUIT BLOCK DIAGRAMS.

1620 West Fountainhead Pkwy
Suite 501
Tempe, Arizona 85282
Phone: (480) 893-8860
Improving Arizona's
Infrastructure Since 1942

WILSON ENGINEERS

CITY OF CHANDLER
RECLAIMED WATER INTERCONNECT FACILITY

LIGHTING CONTROLS SCHEMATIC DIAGRAMS

CITY PROJECT NO. WW1901.203
WILSON PROJECT NO. 21007

Design: ER | Drawn: ER | Checked: PKP
Date: 02/2022 | Wilson Project No.: 21007

Revision	Date	Description	By

VERIFY SCALES
BAR IS ONE INCH ON ORIGINAL DRAWING
0 1"
IF NOT ONE INCH ON THIS SHEET, ADJUST SCALES ACCORDINGLY

Registered Professional Engineer (Electrical)
68430
PHANI KIRAN PEDDINTI
DATE SIGNED 02-23-2022
ARIZONA U.S.A.

Sheet No. E-4.09

G:\PROJECT\21007\CADD\DESIGN\ELECTRICAL\21007 E-4.09.DWG, 2/23/2022 12:49:43 PM, PPeddinti, 1:1

AGENCY REVIEW

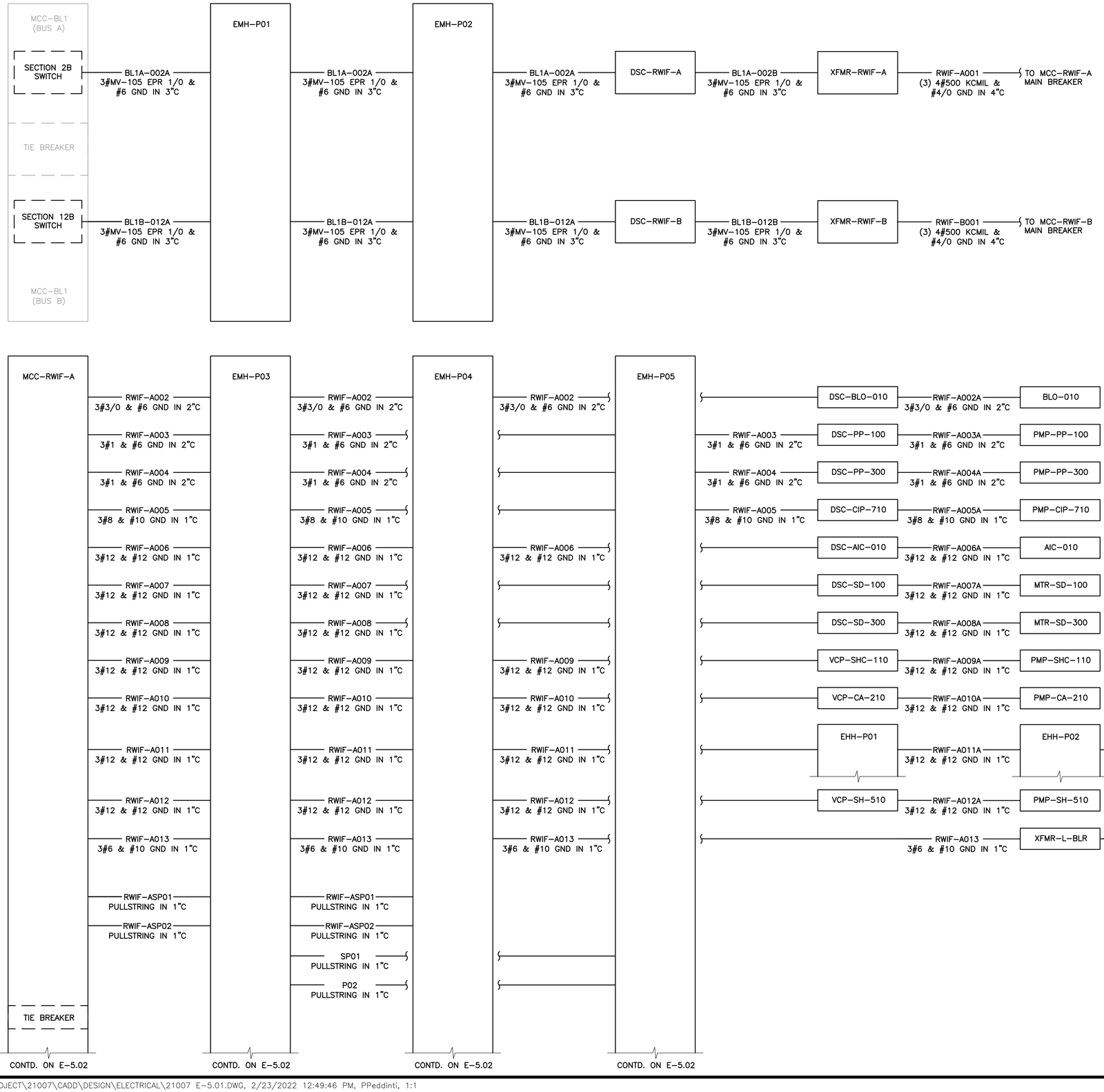

NOTES:

1. NO WORK TO COMMENCE WITHOUT APPROVED MOPO BY OWNER AND ENGINEER.
2. SEE SHEET E-2.01 FOR MCC-BL1 SINGLE LINE DIAGRAM.
3. SEE SHEET E-2.03 FOR MCC-RWIF SINGLE LINE DIAGRAM.

LEGEND:

EXAMPLE: (3) 3/500 KCMIL & #3/0 GND IN 4"C
INDICATES THAT THERE ARE (3) 4" CONDUITS WITH ONE SET OF 3#500 KCMIL & #3/0 GND CONDUCTORS IN EACH CONDUIT.

1620 West Fountainhead Pkwy
Suite 501
Tempe, Arizona 85282
Phone: (480) 893-8860
Improving Arizona's Infrastructure Since 1942

WILSON ENGINEERS

CITY OF CHANDLER
RECLAIMED WATER INTERCONNECT FACILITY

RWIF POWER
CONDUIT BLOCK DIAGRAM 1

CITY PROJECT NO. WW1901.203
WILSON PROJECT NO. 21007

Design: ER	Drawn: ER	Checked: PKP
Date: 02/2022	Wilson Project No.: 21007	

Revision	Date	Description	By

VERIFY SCALES
BAR IS ONE INCH ON ORIGINAL DRAWING
0 1"
IF NOT ONE INCH ON THIS SHEET, ADJUST SCALES ACCORDINGLY

68430
PHANI KIRAN PEDDINTI
REGISTERED PROFESSIONAL ENGINEER
ARIZONA U.S.A.
DATE SIGNED 02-23-2022

Sheet No. **E-5.01**

XREFS: TB-WE-D; SEAL-PKP; SIGN-PKP

G:\PROJECT\21007\CADD\DESIGN\ELECTRICAL\21007 E-5.01.DWG, 2/23/2022 12:49:46 PM, PPeddinti, 1:1

AGENCY REVIEW

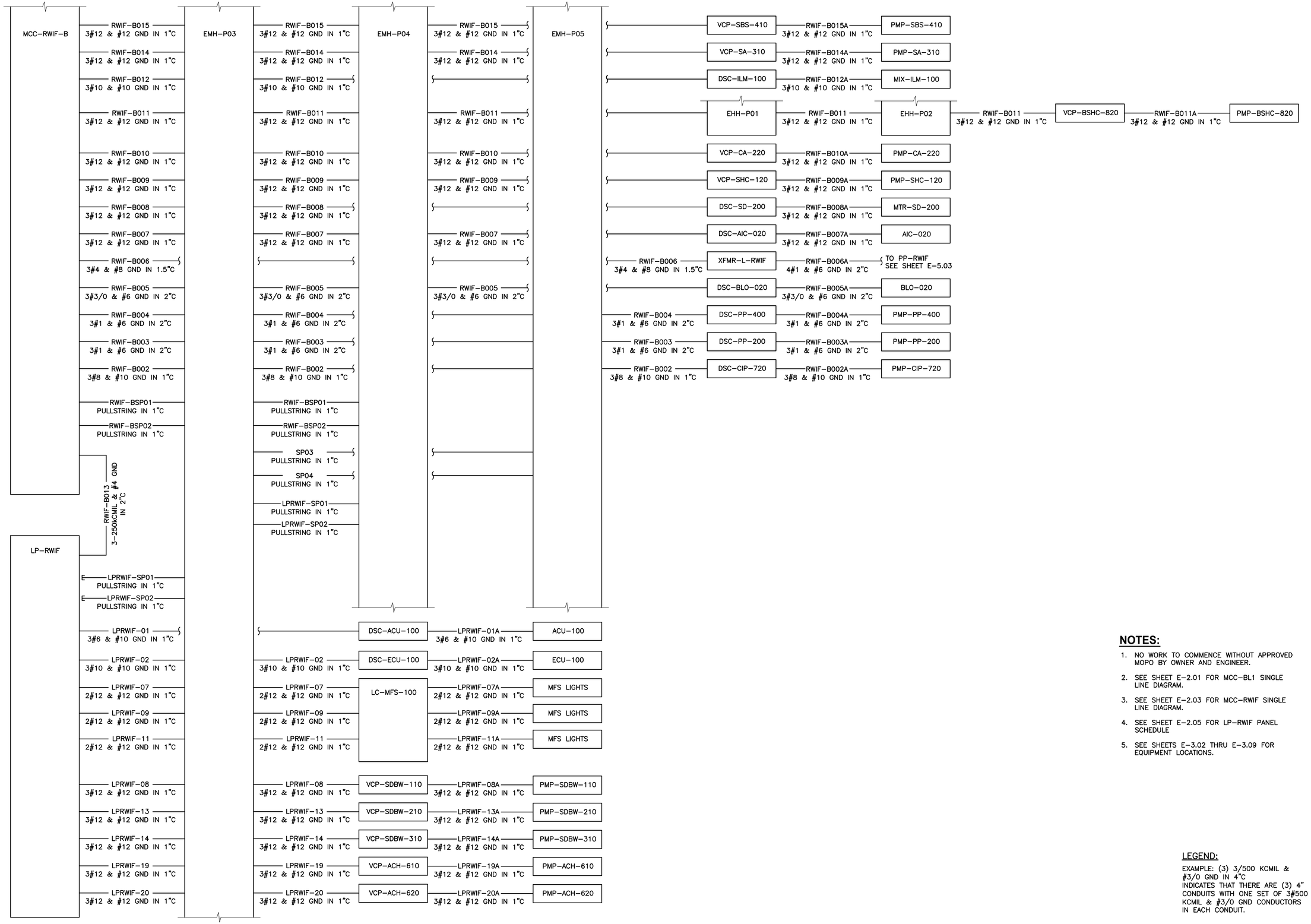

NOTES:

1. NO WORK TO COMMENCE WITHOUT APPROVED MOPO BY OWNER AND ENGINEER.
2. SEE SHEET E-2.01 FOR MCC-BL1 SINGLE LINE DIAGRAM.
3. SEE SHEET E-2.03 FOR MCC-RWIF SINGLE LINE DIAGRAM.
4. SEE SHEET E-2.05 FOR LP-RWIF PANEL SCHEDULE
5. SEE SHEETS E-3.02 THRU E-3.09 FOR EQUIPMENT LOCATIONS.

LEGEND:

EXAMPLE: (3) 3/500 KCMIL & #3/0 GND IN 4"C
INDICATES THAT THERE ARE (3) 4" CONDUITS WITH ONE SET OF 3#500 KCMIL & #3/0 GND CONDUCTORS IN EACH CONDUIT.

1620 West Fountainhead Pkwy
Suite 501
Tempe, Arizona 85282
Phone: (480) 893-8860
Improving Arizona's Infrastructure Since 1942

WILSON ENGINEERS

CITY OF CHANDLER
RECLAIMED WATER INTERCONNECT FACILITY

RWIF POWER
CONDUIT BLOCK DIAGRAM 2

CITY PROJECT NO. WW1901.203
WILSON PROJECT NO. 21007

Revision	Date	Description	By

Design: ER
Date: 02/2022
Drawn: ER
Wilson Project No.: 21007
Checked: PKP

VERIFY SCALES
BAR IS ONE INCH ON ORIGINAL DRAWING
0 1"
IF NOT ONE INCH ON THIS SHEET, ADJUST SCALES ACCORDINGLY

Registered Professional Engineer
68430
PHANI KIRAN PEDDINTI
DATE SIGNED 02/23/2022
ARIZONA U.S.A.

Sheet No. **E-5.02**

AGENCY REVIEW

XREFS: TB-WF-D; SEAL-PKP; SIGN-PKP

G:\PROJECT\21007\CADD\DESIGN\ELECTRICAL\21007 E-5.02.DWG, 2/23/2022 12:49:49 PM, PPeddinti, 1:1

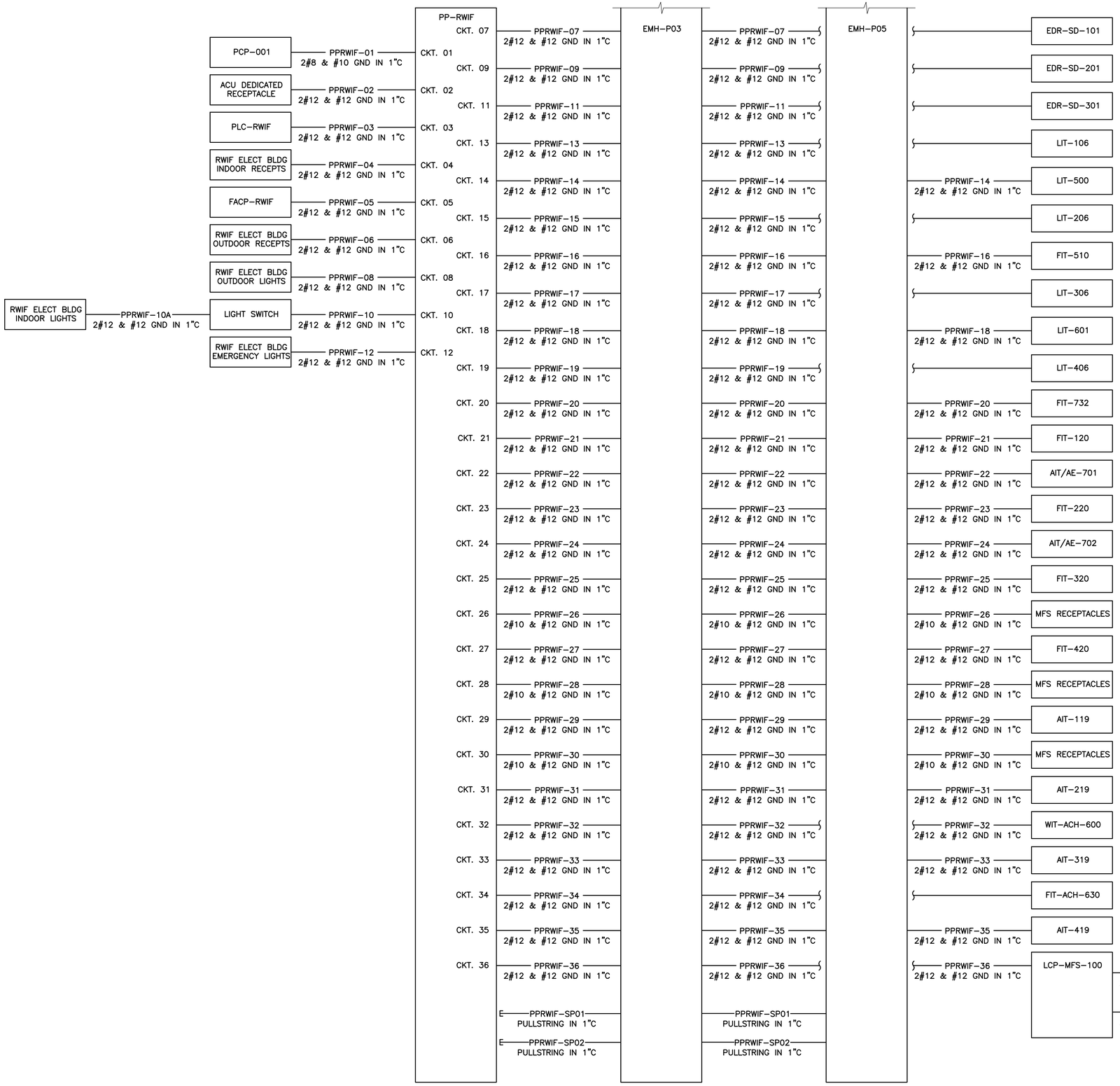

NOTES:

1. NO WORK TO COMMENCE WITHOUT APPROVED MOPO BY OWNER AND ENGINEER.
2. SEE SHEET E-2.04 FOR PP-RWIF PANEL SCHEDULE.
3. SEE SHEETS E-3.02 AND E-3.04 FOR EQUIPMENT LOCATIONS.

LEGEND:

EXAMPLE: (3) 3/500 KCMIL & #3/0 GND IN 4"C
INDICATES THAT THERE ARE (3) 4" CONDUITS WITH ONE SET OF 3#500 KCMIL & #3/0 GND CONDUCTORS IN EACH CONDUIT.

1620 West Fountainhead Pkwy
Suite 501
Tempe, Arizona 85282
Phone: (480) 893-8860
Improving Arizona's Infrastructure Since 1942

WILSON ENGINEERS

CITY OF CHANDLER
RECLAIMED WATER INTERCONNECT FACILITY

RWIF POWER
CONDUIT BLOCK DIAGRAM 3
CITY PROJECT NO. WW1901.203
WILSON PROJECT NO. 21007

Design: ER	Drawn: ER	Checked: PKP
Date: 02/2022	Wilson Project No.: 21007	

Revision	Date	Description	By

VERIFY SCALES
BAR IS ONE INCH ON ORIGINAL DRAWING
0 — 1"
IF NOT ONE INCH ON THIS SHEET, ADJUST SCALES ACCORDINGLY

Registered Professional Engineer
68430
PHANI KIRAN PEDDINTI
I HEREBY CERTIFY THAT THE ABOVE PLANS WERE PREPARED BY ME OR UNDER MY DIRECT SUPERVISION AND THAT I AM A DULY REGISTERED PROFESSIONAL ENGINEER UNDER THE LAWS OF THE STATE OF ARIZONA U.S.A.
EXPIRES 09-30-2022

Sheet No. **E-5.03**

AGENCY REVIEW

XREFS: TB-WE-D; SEAL-PKP; SIGN-PKP
G:\PROJECT\21007\CADD\DESIGN\ELECTRICAL\21007 E-5.03.DWG, 2/23/2022 12:49:52 PM, PPeddinti, 1:1

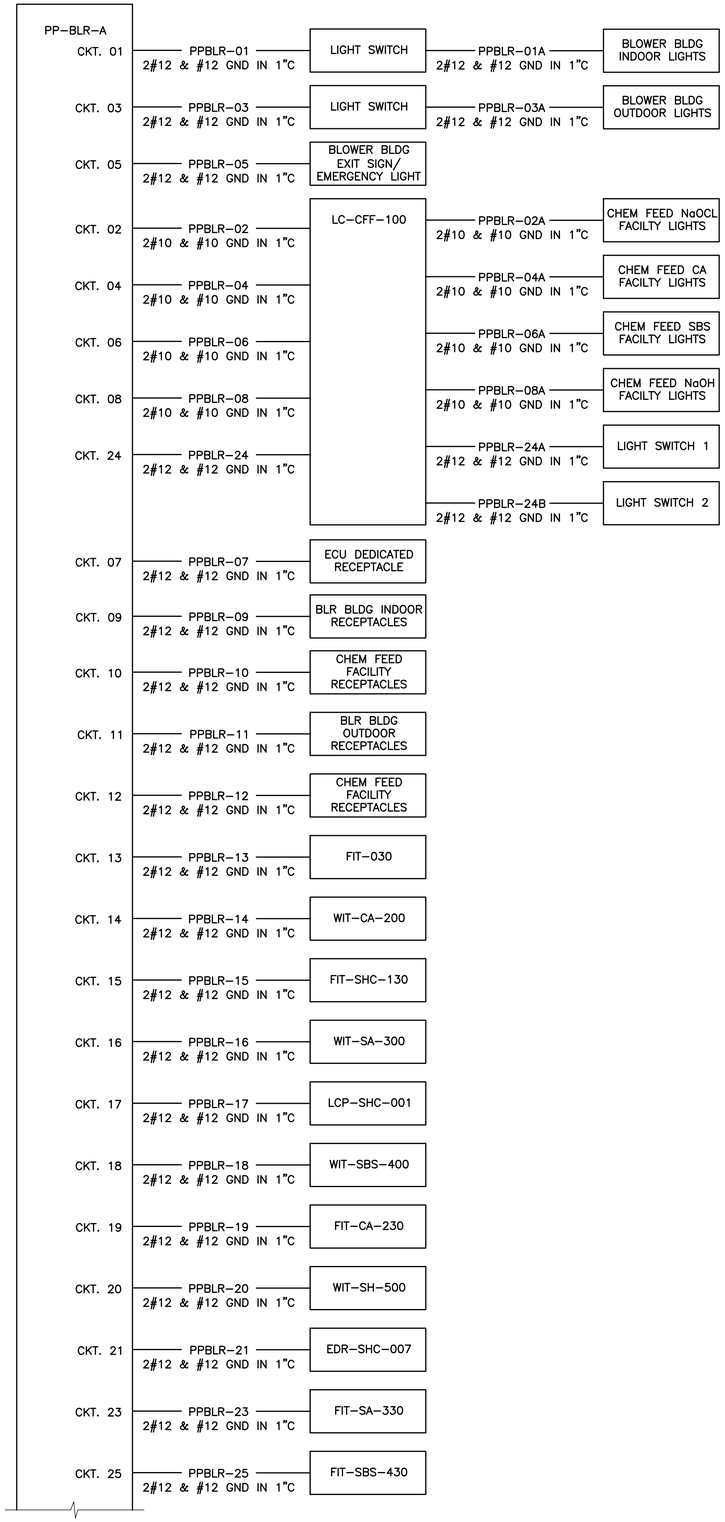

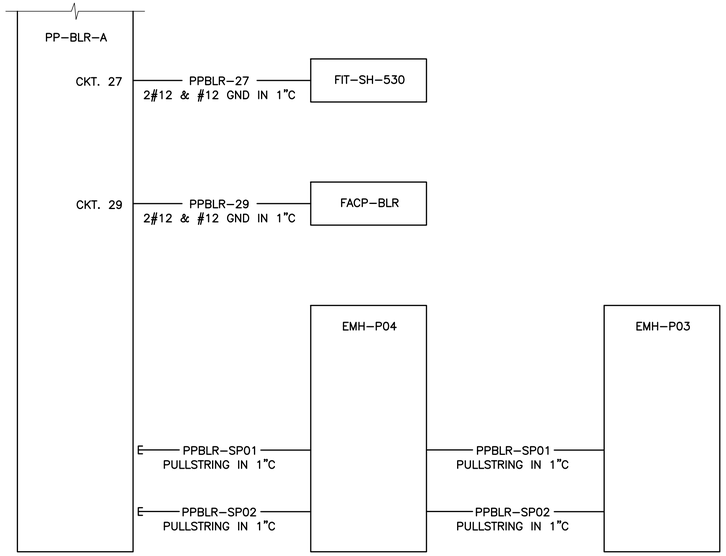

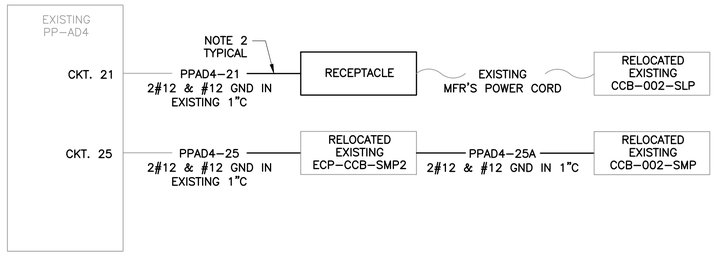

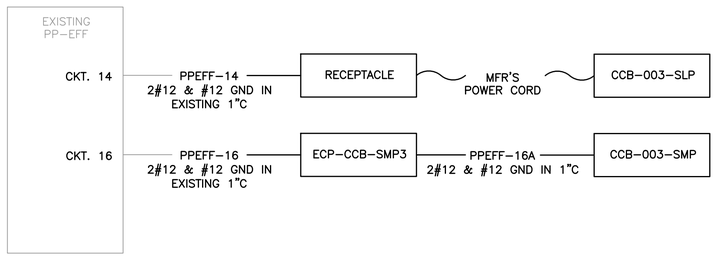

NOTES:

1. NO WORK TO COMMENCE WITHOUT APPROVED MOPO BY OWNER AND ENGINEER.
2. EXTEND EXISTING CONDUITS AS NECESSARY.
3. SEE SHEET E-2.04 FOR PP-BLR-A PANEL SCHEDULE.
4. SEE SHEET E-2.05 FOR PP-AD4 AND PP-EFF PANEL SCHEDULES.
5. SEE SHEETS E-3.07 THRU E-3.14 FOR EQUIPMENT LOCATIONS.

LEGEND:

EXAMPLE: (3) 3/500 KCMIL & #3/0 GND IN 4"C
INDICATES THAT THERE ARE (3) 4" CONDUITS WITH ONE SET OF 3#500 KCMIL & #3/0 GND CONDUCTORS IN EACH CONDUIT.

1620 West Fountainhead Pkwy
Suite 501
Tempe, Arizona 85282
Phone: (480) 893-8860
Improving Arizona's Infrastructure Since 1942

WILSON ENGINEERS

CITY OF CHANDLER
RECLAIMED WATER INTERCONNECT FACILITY

RWIF POWER
CONDUIT BLOCK DIAGRAM 4
CITY PROJECT NO. WW1901.203
WILSON PROJECT NO. 21007

Design: ER	Drawn: ER	Checked: PKP
Date: 02/2022	Wilson Project No.: 21007	

Revision	Date	Description	By

VERIFY SCALES
BAR IS ONE INCH ON ORIGINAL DRAWING
0 1"
IF NOT ONE INCH ON THIS SHEET, ADJUST SCALES ACCORDINGLY

Professional Engineer
68430
PHANI KIRAN PEDDINTI
I WAS SIGNED 05-23-2022
ARIZONA U.S.A.

Sheet No. **E-5.04**

AGENCY REVIEW

XREFS: TB-WE-D; SEAL-PKP; SIGN-PKP

G:\PROJECT\21007\CADD\DESIGN\ELECTRICAL\21007 E-5.04.DWG, 2/23/2022 12:49:55 PM, PPeddinti, 1:1

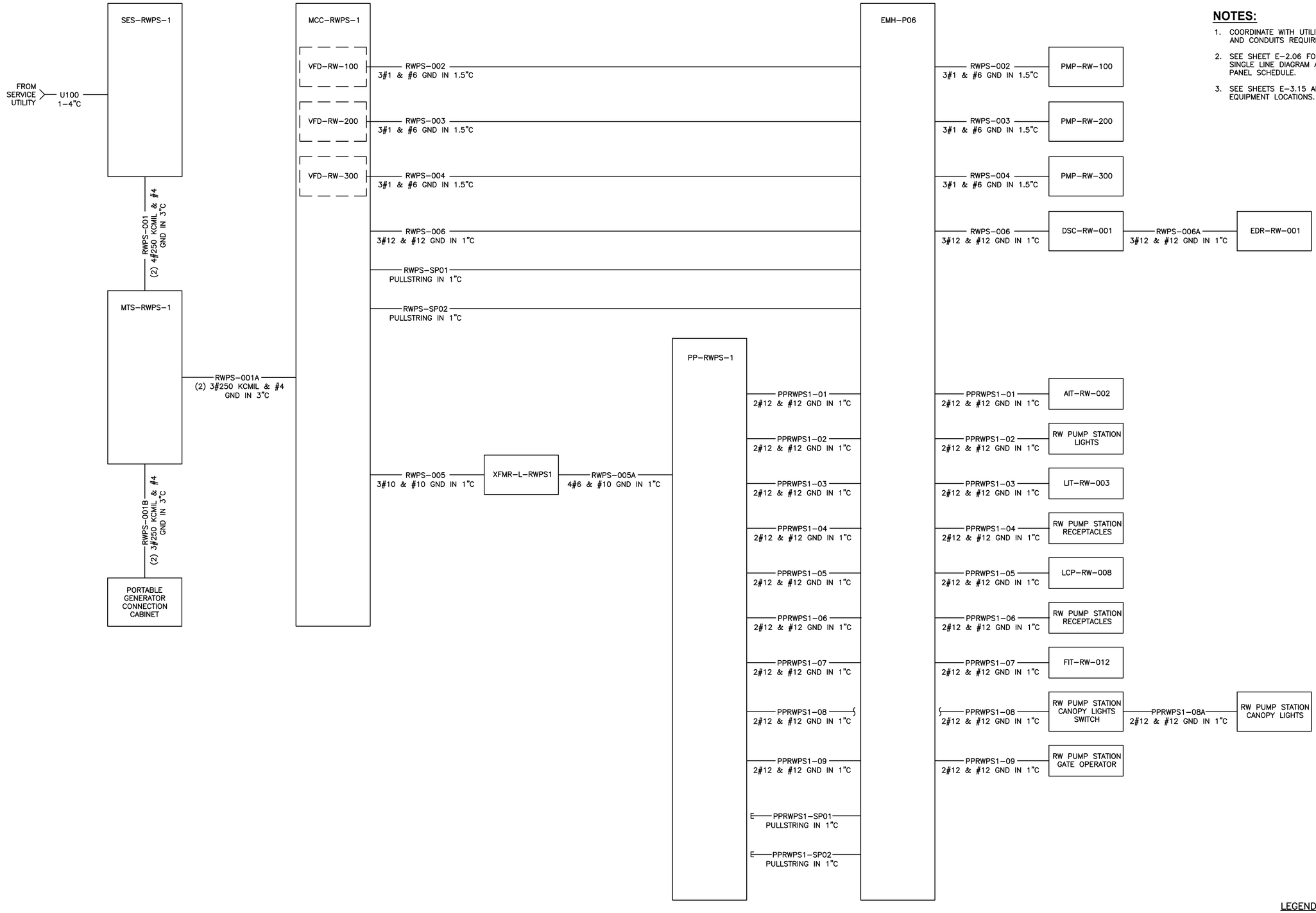

NOTES:

1. COORDINATE WITH UTILITY FOR CONDUCTORS AND CONDUITS REQUIREMENT.
2. SEE SHEET E-2.06 FOR MCC-RWPS-1 SINGLE LINE DIAGRAM AND PP-RWPS-1 PANEL SCHEDULE.
3. SEE SHEETS E-3.15 AND E-3.16 FOR EQUIPMENT LOCATIONS.

LEGEND:

EXAMPLE: (3) 3#500 KCMIL & #3/0 GND IN 4"C
INDICATES THAT THERE ARE (3) 4" CONDUITS WITH ONE SET OF 3#500 KCMIL & #3/0 GND CONDUCTORS IN EACH CONDUIT.

1620 West Fountainhead Pkwy
Suite 501
Tempe, Arizona 85282
Phone: (480) 893-8860
Improving Arizona's Infrastructure Since 1942

WILSON ENGINEERS

CITY OF CHANDLER
RECLAIMED WATER INTERCONNECT FACILITY

RWPS POWER
CONDUIT BLOCK DIAGRAM

CITY PROJECT NO. WW1901.203
WILSON PROJECT NO. 21007

Design: ER	Drawn: ER	Checked: PKP
Date: 02/2022	Wilson Project No.: 21007	

Revision	Date	Description	By

VERIFY SCALES
BAR IS ONE INCH ON ORIGINAL DRAWING
0 1"
IF NOT ONE INCH ON THIS SHEET, ADJUST SCALES ACCORDINGLY



Sheet No. **E-5.05**

XREFS: TB-WE-D; SEAL-PKP; SIGN-PKP

G:\PROJECT\21007\CADD\DESIGN\ELECTRICAL\21007 E-5.05.DWG, 2/23/2022 12:49:58 PM, PPeddinti, 1:1

AGENCY REVIEW

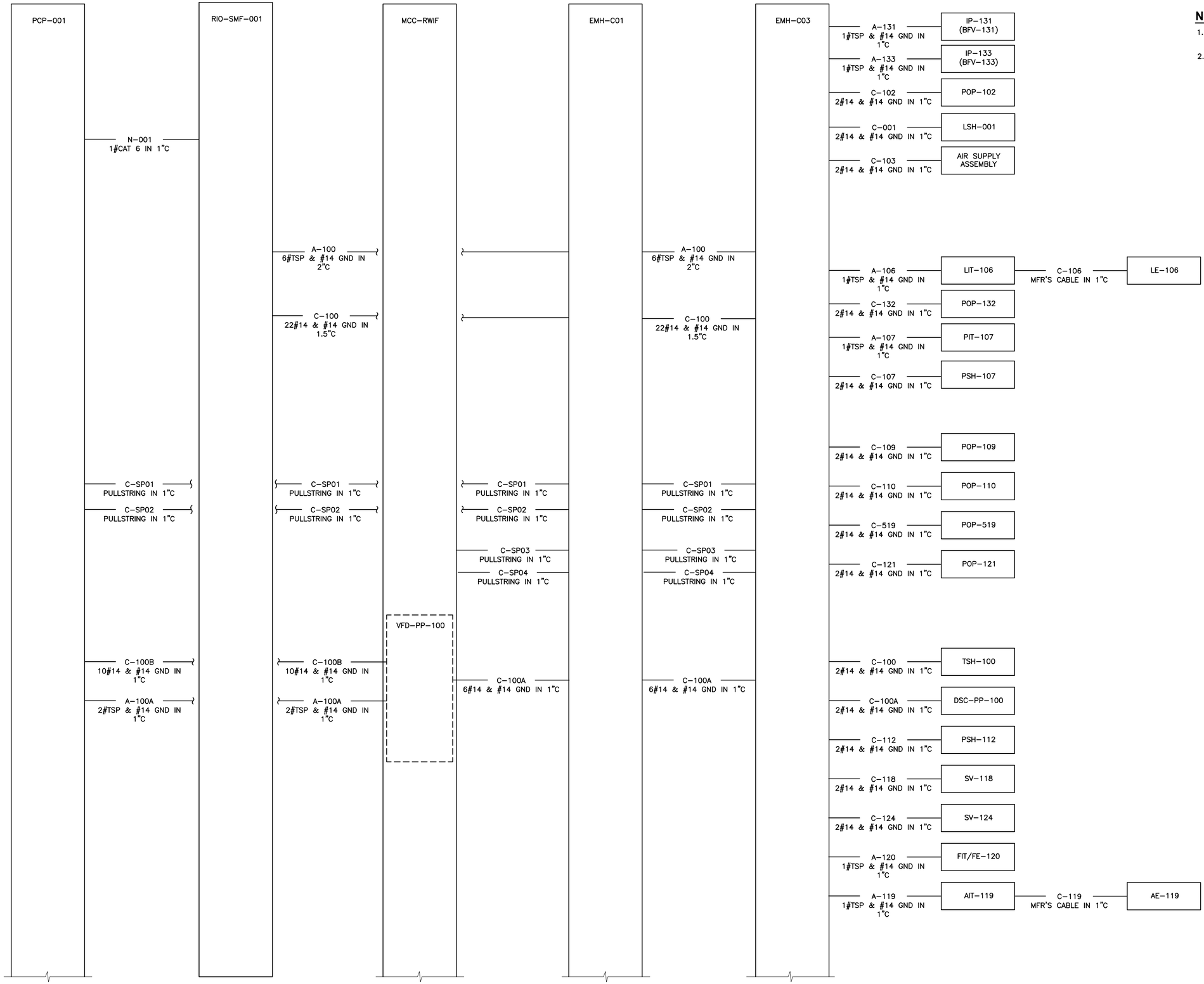

NOTES:

1. NO WORK TO COMMENCE WITHOUT APPROVED MOPO BY OWNER AND ENGINEER.
2. SEE SHEETS E-3.02 THRU E-3.14 FOR EQUIPMENT LOCATIONS.

LEGEND:

EXAMPLE: (3) 3/500 KCMIL & #3/0 GND IN 4"C
INDICATES THAT THERE ARE (3) 4" CONDUITS WITH ONE SET OF 3#500 KCMIL & #3/0 GND CONDUCTORS IN EACH CONDUIT.

1620 West Fountainhead Pkwy
Suite 501
Tempe, Arizona 85282
Phone: (480) 893-8860
Improving Arizona's Infrastructure Since 1942

WILSON ENGINEERS

CITY OF CHANDLER
RECLAIMED WATER INTERCONNECT FACILITY

RWIF CONTROL
CONDUIT BLOCK DIAGRAM 1

CITY PROJECT NO. WW1901.203
WILSON PROJECT NO. 21007

Design: ER	Drawn: ER	Checked: PKP			
Date: 02/2022	Wilson Project No.: 21007				
		Revision	Date	Description	By

VERIFY SCALES
BAR IS ONE INCH ON ORIGINAL DRAWING
0 1"
IF NOT ONE INCH ON THIS SHEET, ADJUST SCALES ACCORDINGLY

Professional Engineer Certificate No. 68430 PHANI KIRAN PEDDINTI Date Signed 02-23-2022 ARIZONA U.S.A.

Sheet No. **E-5.06**

XREFS: TB-WF-0; SEAL-PKP; SIGN-PKP

G:\PROJECT\21007\CADD\DESIGN\ELECTRICAL\21007 E-5.06.DWG, 2/23/2022 12:50:00 PM, PPeddinti, 1:1

AGENCY REVIEW

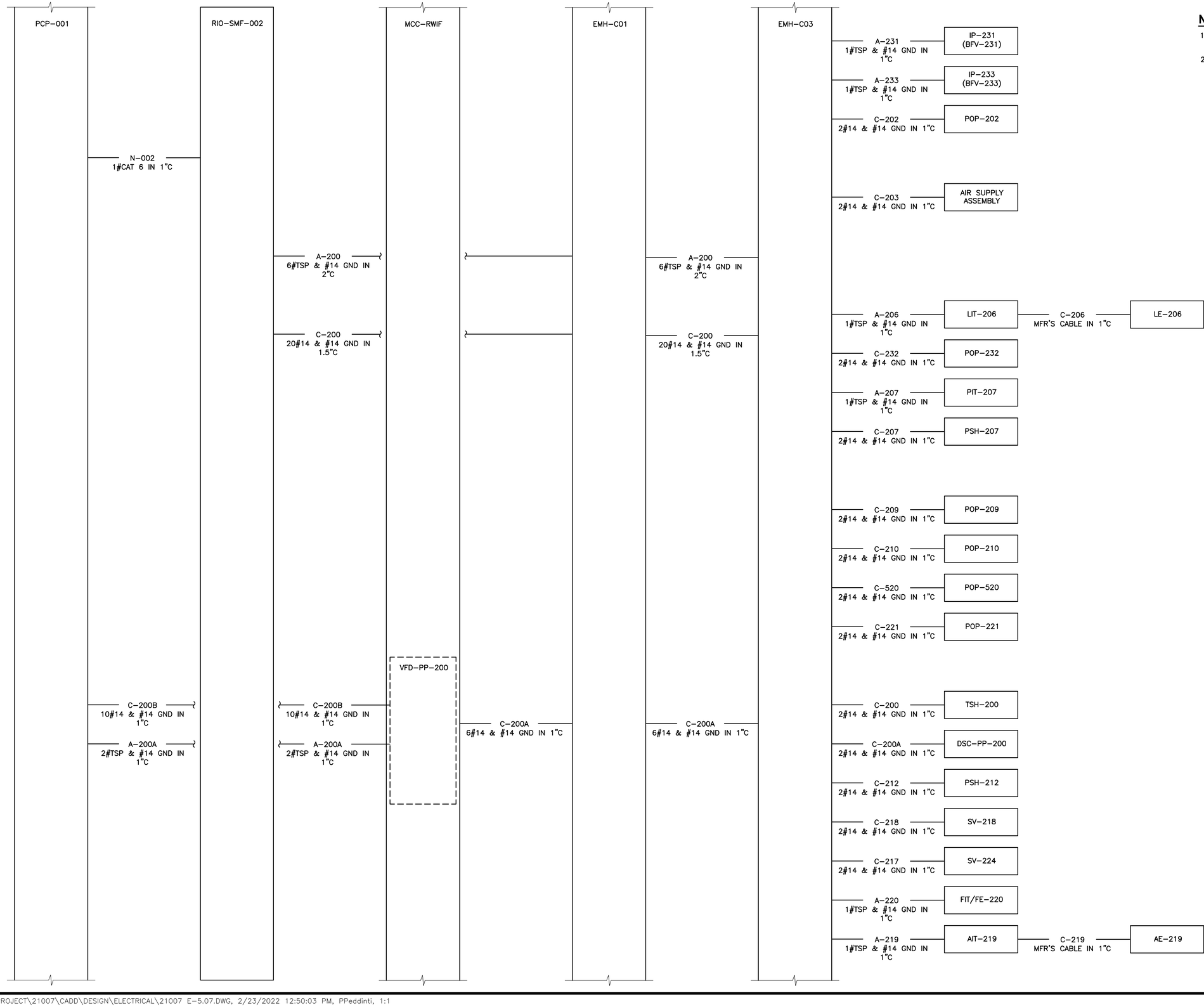

NOTES:

1. NO WORK TO COMMENCE WITHOUT APPROVED MOPO BY OWNER AND ENGINEER.
2. SEE SHEETS E-3.02 THRU E-3.14 FOR EQUIPMENT LOCATIONS.

LEGEND:

EXAMPLE: (3) 3/500 KCMIL & #3/0 GND IN 4"C
INDICATES THAT THERE ARE (3) 4" CONDUITS WITH ONE SET OF 3#500 KCMIL & #3/0 GND CONDUCTORS IN EACH CONDUIT.

1620 West Fountainhead Pkwy
Suite 501
Tempe, Arizona 85282
Phone: (480) 893-8860
Improving Arizona's Infrastructure Since 1942

WILSON ENGINEERS

CITY OF CHANDLER
RECLAIMED WATER INTERCONNECT FACILITY

RWIF CONTROL
CONDUIT BLOCK DIAGRAM 2

CITY PROJECT NO. WW1901.203
WILSON PROJECT NO. 21007

Design: ER
Date: 02/2022
Drawn: ER
Checked: PKP
Wilson Project No.: 21007

Revision	Date	Description	By

VERIFY SCALES
BAR IS ONE INCH ON ORIGINAL DRAWING
0 1"
IF NOT ONE INCH ON THIS SHEET, ADJUST SCALES ACCORDINGLY

68430
PHANI KIRAN PEDDINTI
REGISTERED PROFESSIONAL ENGINEER
DATE SIGNED 02-23-2022
ARIZONA U.S.A.

Sheet No. **E-5.07**

XREFS: TB-WE-D; SEAL-PKP; SIGN-PKP

G:\PROJECT\21007\CADD\DESIGN\ELECTRICAL\21007 E-5.07.DWG, 2/23/2022 12:50:03 PM, PPeddinti, 1:1

AGENCY REVIEW

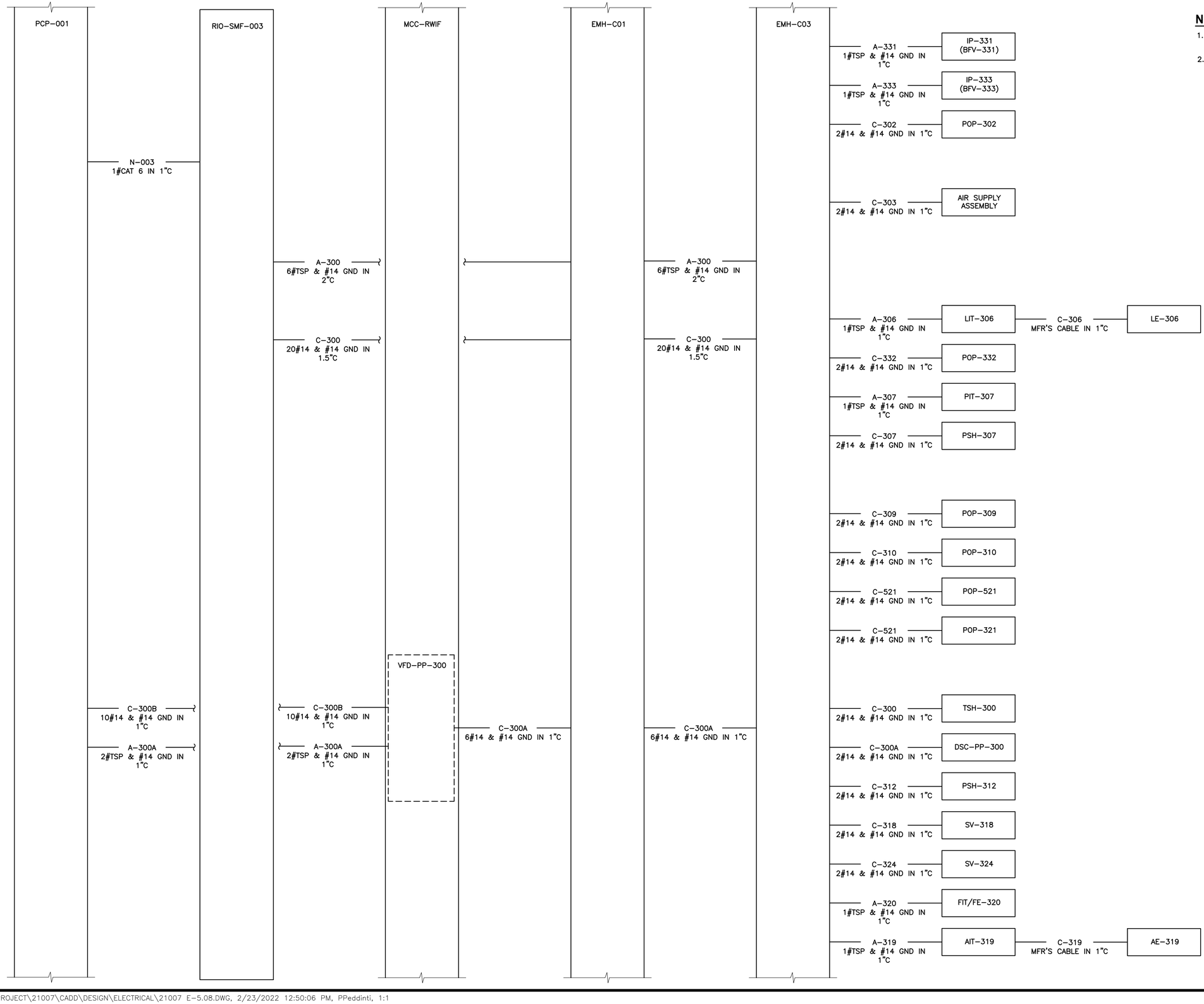

NOTES:

1. NO WORK TO COMMENCE WITHOUT APPROVED MOPO BY OWNER AND ENGINEER.
2. SEE SHEETS E-3.02 THRU E-3.14 FOR EQUIPMENT LOCATIONS.

LEGEND:

EXAMPLE: (3) 3/500 KCMIL & #3/0 GND IN 4"C
INDICATES THAT THERE ARE (3) 4" CONDUITS WITH ONE SET OF 3#500 KCMIL & #3/0 GND CONDUCTORS IN EACH CONDUIT.

1620 West Fountainhead Pkwy
Suite 501
Tempe, Arizona 85282
Phone: (480) 893-8860
Improving Arizona's Infrastructure Since 1942

WILSON ENGINEERS

CITY OF CHANDLER
RECLAIMED WATER INTERCONNECT FACILITY

RWIF CONTROL
CONDUIT BLOCK DIAGRAM 3

CITY PROJECT NO. WW1901.203
WILSON PROJECT NO. 21007

Design: ER | Drawn: ER | Checked: PKP
Date: 02/2022 | Wilson Project No.: 21007

Revision	Date	Description	By

VERIFY SCALES
BAR IS ONE INCH ON ORIGINAL DRAWING
0 1"
IF NOT ONE INCH ON THIS SHEET, ADJUST SCALES ACCORDINGLY

Registered Professional Engineer (Electrical)
68430
PHANI KIRAN PEDDINTI
DATE SIGNED 02-23-2022
ARIZONA U.S.A.

Sheet No. E-5.08

XREFS: TB-WE-D; SEAL-PKP; SIGN-PKP

G:\PROJECT\21007\CADD\DESIGN\ELECTRICAL\21007 E-5.08.DWG, 2/23/2022 12:50:06 PM, PPeddinti, 1:1

AGENCY REVIEW

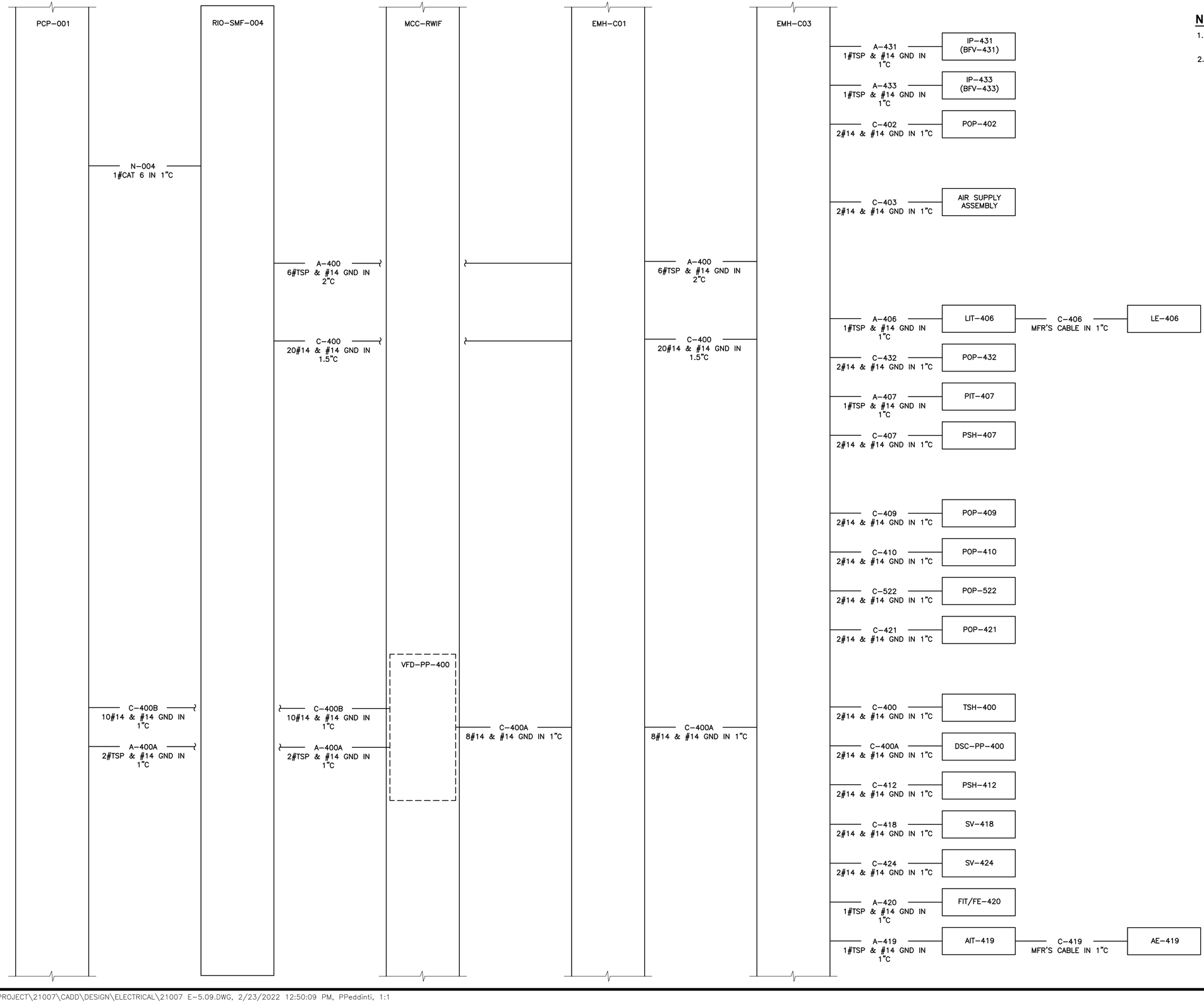

NOTES:

1. NO WORK TO COMMENCE WITHOUT APPROVED MOPO BY OWNER AND ENGINEER.
2. SEE SHEETS E-3.02 THRU E-3.14 FOR EQUIPMENT LOCATIONS.

LEGEND:

EXAMPLE: (3) 3/500 KCMIL & #3/0 GND IN 4"C
INDICATES THAT THERE ARE (3) 4" CONDUITS WITH ONE SET OF 3#500 KCMIL & #3/0 GND CONDUCTORS IN EACH CONDUIT.

1620 West Fountainhead Pkwy
Suite 501
Tempe, Arizona 85282
Phone: (480) 893-8860
Improving Arizona's Infrastructure Since 1942

WILSON ENGINEERS

CITY OF CHANDLER
RECLAIMED WATER INTERCONNECT FACILITY

RWIF CONTROL
CONDUIT BLOCK DIAGRAM 4
CITY PROJECT NO. WW1901.203
WILSON PROJECT NO. 21007

Design: ER
Date: 02/2022
Drawn: ER
Checked: PKP
Wilson Project No.: 21007

Revision	Date	Description	By

VERIFY SCALES
BAR IS ONE INCH ON ORIGINAL DRAWING
0 1"
IF NOT ONE INCH ON THIS SHEET, ADJUST SCALES ACCORDINGLY

68430
PHANI KIRAN PEDDINTI
REGISTERED PROFESSIONAL ENGINEER
ARIZONA U.S.A.
DATE SIGNED 02-23-2022

Sheet No. **E-5.09**

XREFS: TB-WE-D; SEAL-PKP; SIGN-PKP

G:\PROJECT\21007\CADD\DESIGN\ELECTRICAL\21007 E-5.09.DWG, 2/23/2022 12:50:09 PM, PPeddinti, 1:1

AGENCY REVIEW

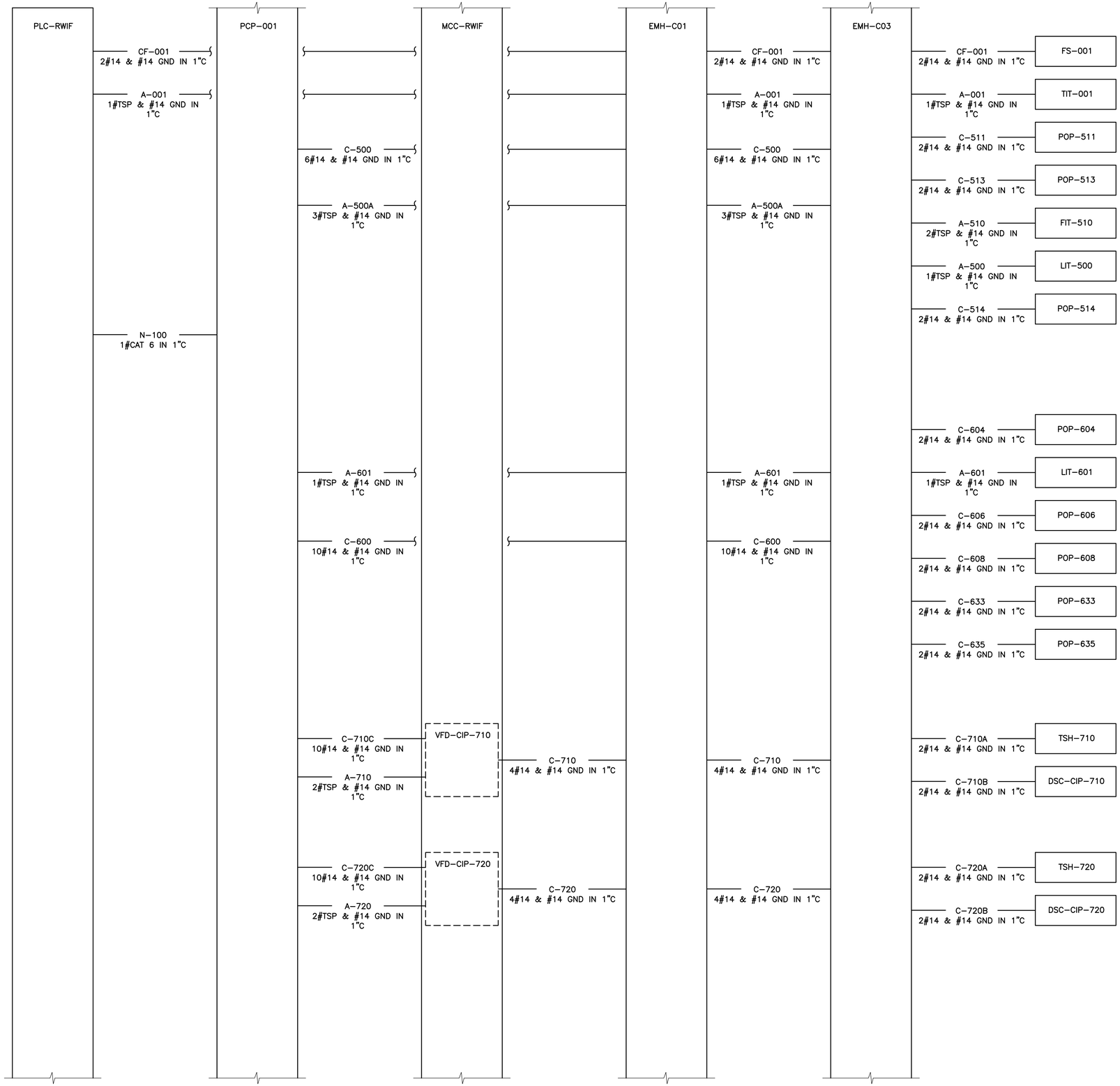

NOTES:

1. NO WORK TO COMMENCE WITHOUT APPROVED MOPO BY OWNER AND ENGINEER.
2. SEE SHEETS E-3.02 THRU E-3.14 FOR EQUIPMENT LOCATIONS.

LEGEND:

EXAMPLE: (3) 3/500 KCMIL & #3/0 GND IN 4"C
INDICATES THAT THERE ARE (3) 4" CONDUITS WITH ONE SET OF 3#500 KCMIL & #3/0 GND CONDUCTORS IN EACH CONDUIT.

1620 West Fountainhead Pkwy
Suite 501
Tempe, Arizona 85282
Phone: (480) 893-8860
Improving Arizona's Infrastructure Since 1942

WILSON ENGINEERS

CITY OF CHANDLER
RECLAIMED WATER INTERCONNECT FACILITY

RWIF CONTROL
CONDUIT BLOCK DIAGRAM 5

CITY PROJECT NO. WW1901.203
WILSON PROJECT NO. 21007

Revision	Date	Description	By

Design: ER
Date: 02/2022
Drawn: ER
Wilson Project No.: 21007
Checked: PKP

VERIFY SCALES
BAR IS ONE INCH ON ORIGINAL DRAWING
0 1"
IF NOT ONE INCH ON THIS SHEET, ADJUST SCALES ACCORDINGLY

Professional Engineer Certificate
68430
PHANI KIRAN PEDDINTI
DATE SIGNED 02-23-2022
ARIZONA U.S.A.

Sheet No. **E-5.10**

AGENCY REVIEW

XREFS: TB-WE-D; SEAL-PKP; SIGN-PKP

G:\PROJECT\21007\CADD\DESIGN\ELECTRICAL\21007 E-5.10.DWG, 2/23/2022 12:50:12 PM, PPeddinti, 1:1

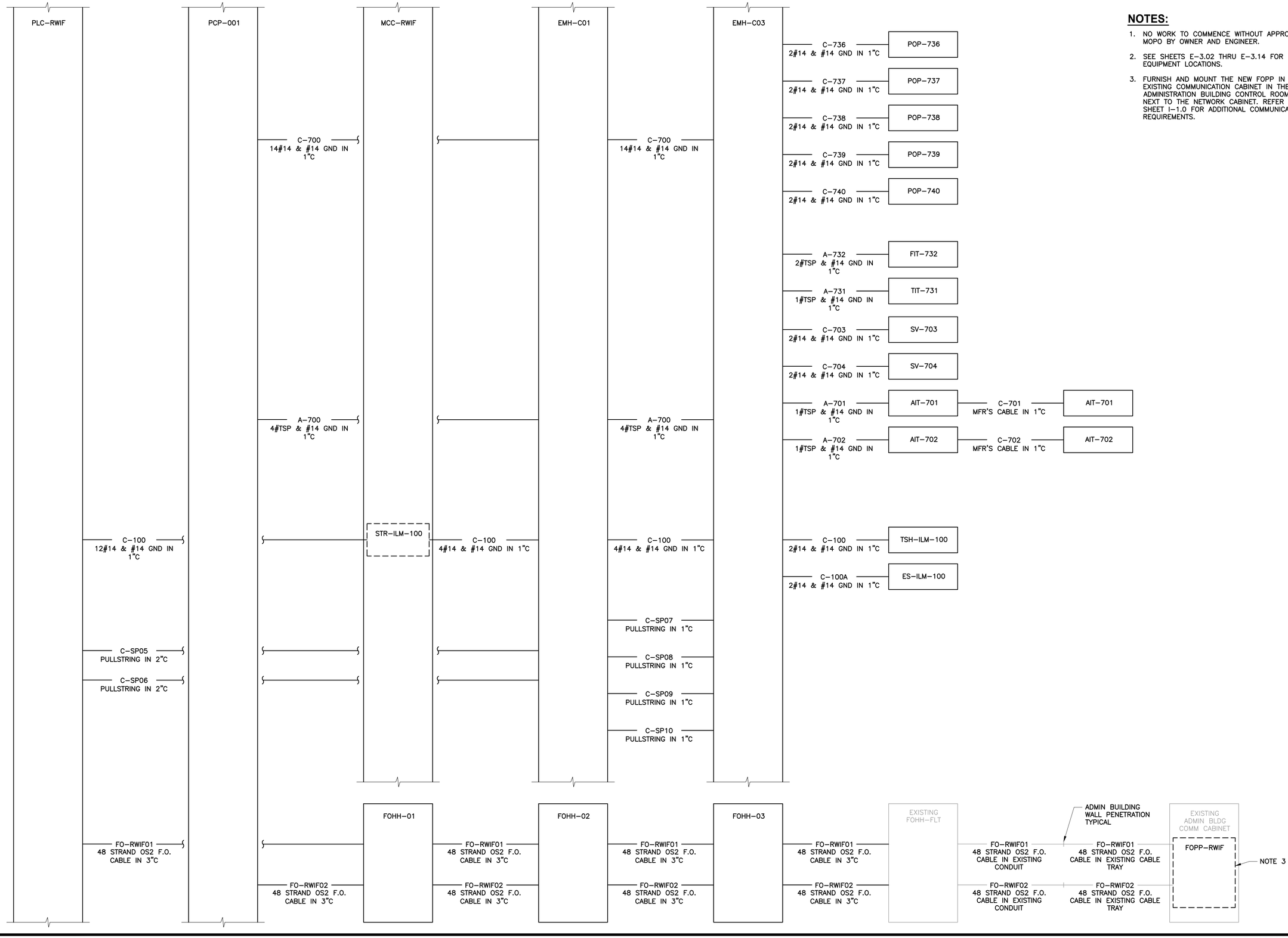

NOTES:

1. NO WORK TO COMMENCE WITHOUT APPROVED MOPO BY OWNER AND ENGINEER.
2. SEE SHEETS E-3.02 THRU E-3.14 FOR EQUIPMENT LOCATIONS.
3. FURNISH AND MOUNT THE NEW FOPP IN EXISTING COMMUNICATION CABINET IN THE ADMINISTRATION BUILDING CONTROL ROOM NEXT TO THE NETWORK CABINET. REFER TO SHEET I-1.0 FOR ADDITIONAL COMMUNICATION REQUIREMENTS.

1620 West Fountainhead Pkwy
Suite 501
Tempe, Arizona 85282
Phone: (480) 893-8860
Improving Arizona's Infrastructure Since 1942

WILSON ENGINEERS

CITY OF CHANDLER
RECLAIMED WATER INTERCONNECT FACILITY

RWIF CONTROL
CONDUIT BLOCK DIAGRAM 6

CITY PROJECT NO. WW1901.203
WILSON PROJECT NO. 21007

Design: ER	Drawn: ER	Checked: PKP
Date: 02/2022	Wilson Project No.: 21007	

Revision	Date	Description	By

VERIFY SCALES
BAR IS ONE INCH ON ORIGINAL DRAWING
0 1"
IF NOT ONE INCH ON THIS SHEET, ADJUST SCALES ACCORDINGLY

68430
PHANI KIRAN PEDDINTI
REGISTERED
ARIZONA U.S.A.

Sheet No. **E-5.11**

XREFS: TB-WE-D; SEAL-PKP; SIGN-PKP

G:\PROJECT\21007\CADD\DESIGN\ELECTRICAL\21007 E-5.11.DWG, 2/23/2022 12:50:14 PM, PPeddinti, 1:1

AGENCY REVIEW

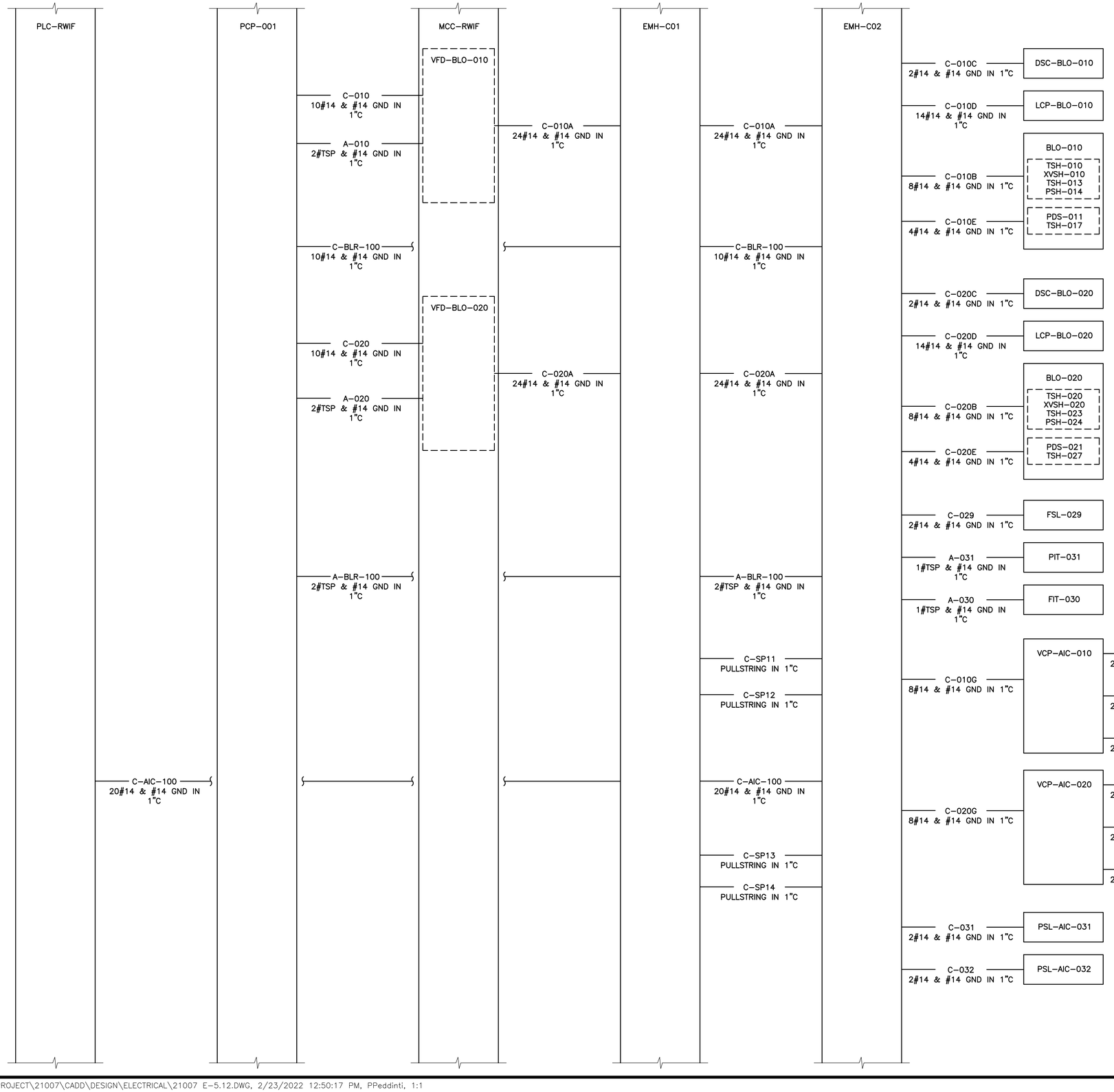

NOTES:

1. NO WORK TO COMMENCE WITHOUT APPROVED MOPO BY OWNER AND ENGINEER.
2. SEE SHEETS E-3.02 THRU E-3.14 FOR EQUIPMENT LOCATIONS.

LEGEND:

EXAMPLE: (3) 3/500 KCMIL & #3/0 GND IN 4"C
INDICATES THAT THERE ARE (3) 4" CONDUITS WITH ONE SET OF 3#500 KCMIL & #3/0 GND CONDUCTORS IN EACH CONDUIT.

1620 West Fountainhead Pkwy
Suite 501
Tempe, Arizona 85282
Phone: (480) 893-8860
Improving Arizona's Infrastructure Since 1942

WILSON ENGINEERS

CITY OF CHANDLER
RECLAIMED WATER INTERCONNECT FACILITY

RWIF CONTROL
CONDUIT BLOCK DIAGRAM 7

CITY PROJECT NO. WW1901.203
WILSON PROJECT NO. 21007

Design: ER	Drawn: ER	Checked: PKP
Date: 02/2022	Wilson Project No.: 21007	

Revision	Date	Description	By

VERIFY SCALES
BAR IS ONE INCH ON ORIGINAL DRAWING
0 1"
IF NOT ONE INCH ON THIS SHEET, ADJUST SCALES ACCORDINGLY



Sheet No. **E-5.12**

XREFS: TB-WE-D; SEAL-PKP; SIGN-PKP

G:\PROJECT\21007\CADD\DESIGN\ELECTRICAL\21007 E-5.12.DWG, 2/23/2022 12:50:17 PM, PPeddinti, 1:1

AGENCY REVIEW

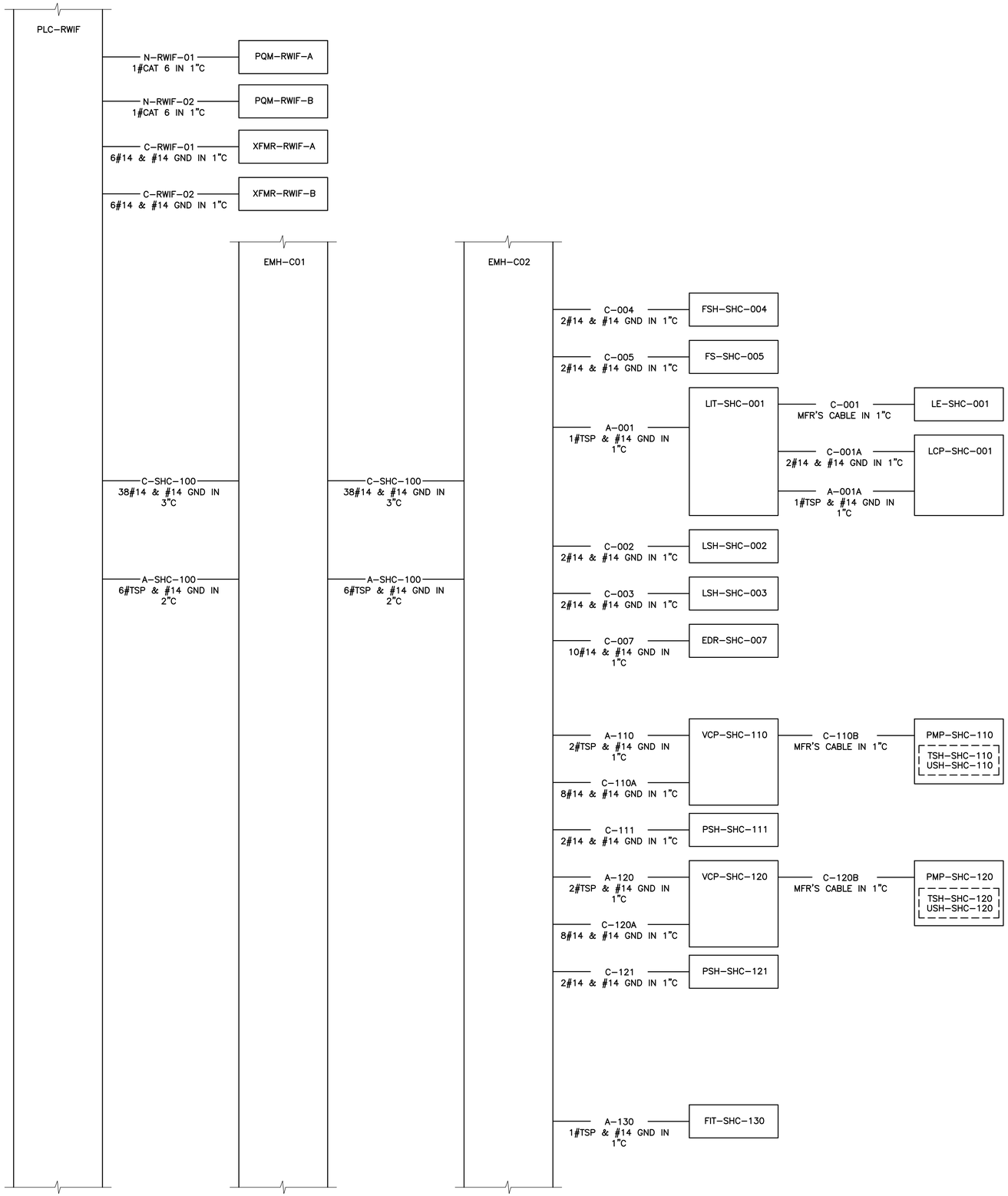

NOTES:

1. NO WORK TO COMMENCE WITHOUT APPROVED MOPO BY OWNER AND ENGINEER.
2. SEE SHEETS E-3.02 THRU E-3.14 FOR EQUIPMENT LOCATIONS.

LEGEND:

EXAMPLE: (3) 3/500 KCMIL & #3/0 GND IN 4"C
INDICATES THAT THERE ARE (3) 4" CONDUITS WITH ONE SET OF 3#500 KCMIL & #3/0 GND CONDUCTORS IN EACH CONDUIT.

1620 West Fountainhead Pkwy
Suite 501
Tempe, Arizona 85282
Phone: (480) 893-8860
Improving Arizona's Infrastructure Since 1942

WILSON ENGINEERS

CITY OF CHANDLER
RECLAIMED WATER INTERCONNECT FACILITY

RWIF CONTROL
CONDUIT BLOCK DIAGRAM 8

CITY PROJECT NO. WW1901.203
WILSON PROJECT NO. 21007

Design: ER
Date: 02/2022
Drawn: ER
Wilson Project No.: 21007
Checked: PKP

Revision	Date	Description	By

VERIFY SCALES
BAR IS ONE INCH ON ORIGINAL DRAWING
0 1"
IF NOT ONE INCH ON THIS SHEET, ADJUST SCALES ACCORDINGLY

Registered Professional Engineer
68430
PHANI KIRAN PEDDINTI
DATE SIGNED 02-23-2022
ARIZONA U.S.A.

Sheet No. **E-5.13**

XREFS: TB-WE-D; SEAL-PKP; SIGN-PKP

G:\PROJECT\21007\CADD\DESIGN\ELECTRICAL\21007 E-5.13.DWG, 2/23/2022 12:50:20 PM, PPeddinti, 1:1

AGENCY REVIEW

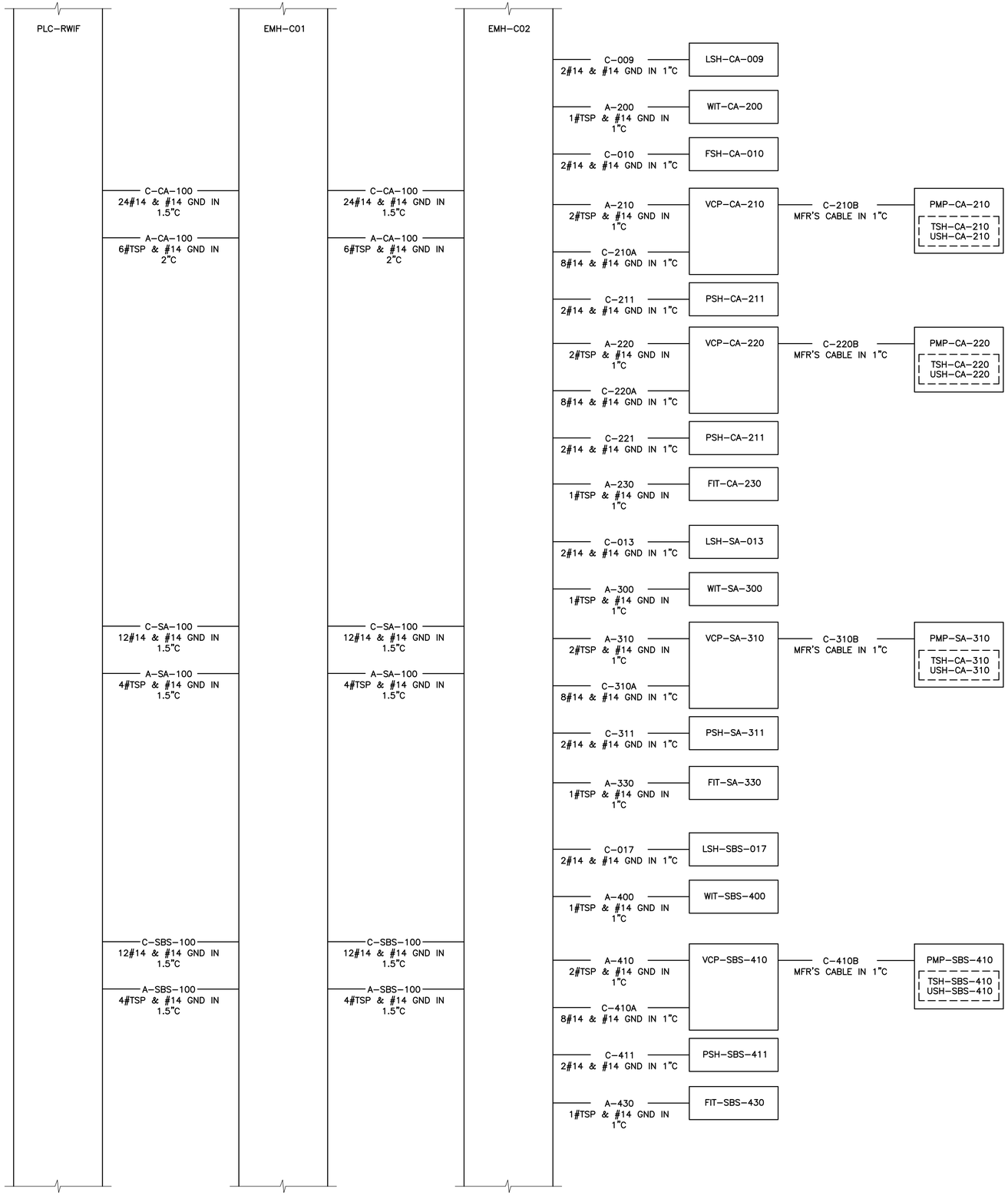

NOTES:

1. NO WORK TO COMMENCE WITHOUT APPROVED MOPO BY OWNER AND ENGINEER.
2. SEE SHEETS E–3.02 THRU E–3.14 FOR EQUIPMENT LOCATIONS.

LEGEND:

EXAMPLE: (3) 3/500 KCMIL & #3/0 GND IN 4"C
INDICATES THAT THERE ARE (3) 4" CONDUITS WITH ONE SET OF 3#500 KCMIL & #3/0 GND CONDUCTORS IN EACH CONDUIT.

1620 West Fountainhead Pkwy
Suite 501
Tempe, Arizona 85282
Phone: (480) 893-8860
Improving Arizona's Infrastructure Since 1942

WILSON ENGINEERS

CITY OF CHANDLER
RECLAIMED WATER INTERCONNECT FACILITY

RWIF CONTROL
CONDUIT BLOCK DIAGRAM 9

CITY PROJECT NO. WW1901.203
WILSON PROJECT NO. 21007

Design: ER	Drawn: ER	Checked: PKP
Date: 02/2022	Wilson Project No.: 21007	

Revision	Date	Description	By

VERIFY SCALES
BAR IS ONE INCH ON ORIGINAL DRAWING
0 1"
IF NOT ONE INCH ON THIS SHEET, ADJUST SCALES ACCORDINGLY



Sheet No. **E–5.14**

XREFS: TB–WE–D; SEAL–PKP; SIGN–PKP

G:\PROJECT\21007\CADD\DESIGN\ELECTRICAL\21007 E–5.14.DWG, 2/23/2022 12:50:23 PM, PPeddinti, 1:1

AGENCY REVIEW

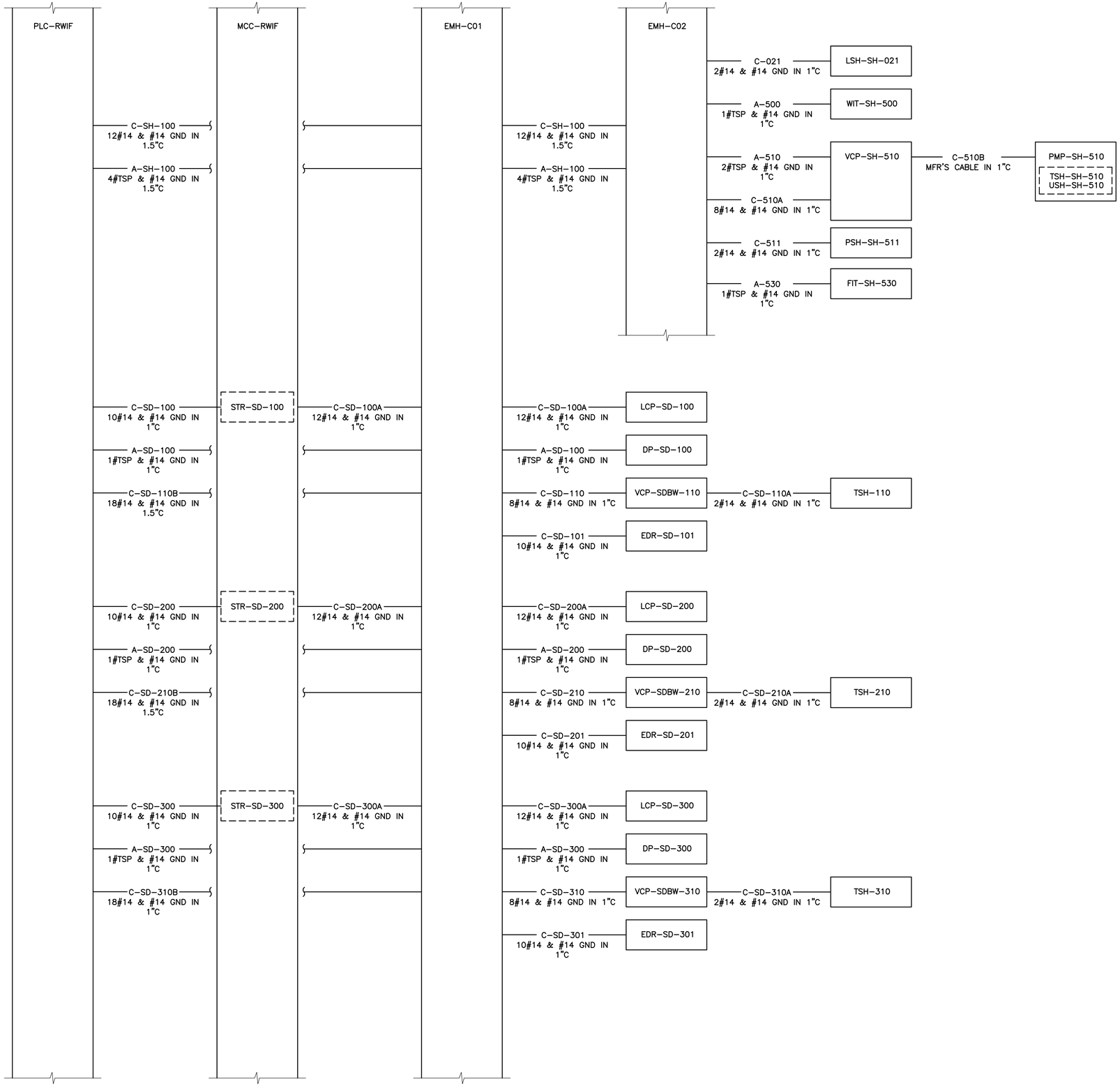

NOTES:

1. NO WORK TO COMMENCE WITHOUT APPROVED MOPO BY OWNER AND ENGINEER.
2. SEE SHEETS E-3.02 THRU E-3.14 FOR EQUIPMENT LOCATIONS.

LEGEND:

EXAMPLE: (3) 3/500 KCMIL & #3/0 GND IN 4"C
INDICATES THAT THERE ARE (3) 4" CONDUITS WITH ONE SET OF 3#500 KCMIL & #3/0 GND CONDUCTORS IN EACH CONDUIT.

1620 West Fountainhead Pkwy
Suite 501
Tempe, Arizona 85282
Phone: (480) 893-8860
Improving Arizona's Infrastructure Since 1942

WILSON ENGINEERS

CITY OF CHANDLER
RECLAIMED WATER INTERCONNECT FACILITY

RWIF CONTROL
CONDUIT BLOCK DIAGRAM 10

CITY PROJECT NO. WW1901.203
WILSON PROJECT NO. 21007

Design: ER	Drawn: ER	Checked: PKP
Date: 02/2022	Wilson Project No.: 21007	

Revision	Date	Description	By

VERIFY SCALES
BAR IS ONE INCH ON ORIGINAL DRAWING
0 1"
IF NOT ONE INCH ON THIS SHEET, ADJUST SCALES ACCORDINGLY

Professional Engineer
68430
PHANI KIRAN PEDDINTI
DATE SIGNED 02-23-2022
ARIZONA U.S.A.

Sheet No. **E-5.15**

AGENCY REVIEW

XREFS: TB-WE-D, SEAL-PKP, SIGN-PKP

G:\PROJECT\21007\CADD\DESIGN\ELECTRICAL\21007 E-5.15.DWG, 2/23/2022 12:50:26 PM, PPeddinti, 1:1

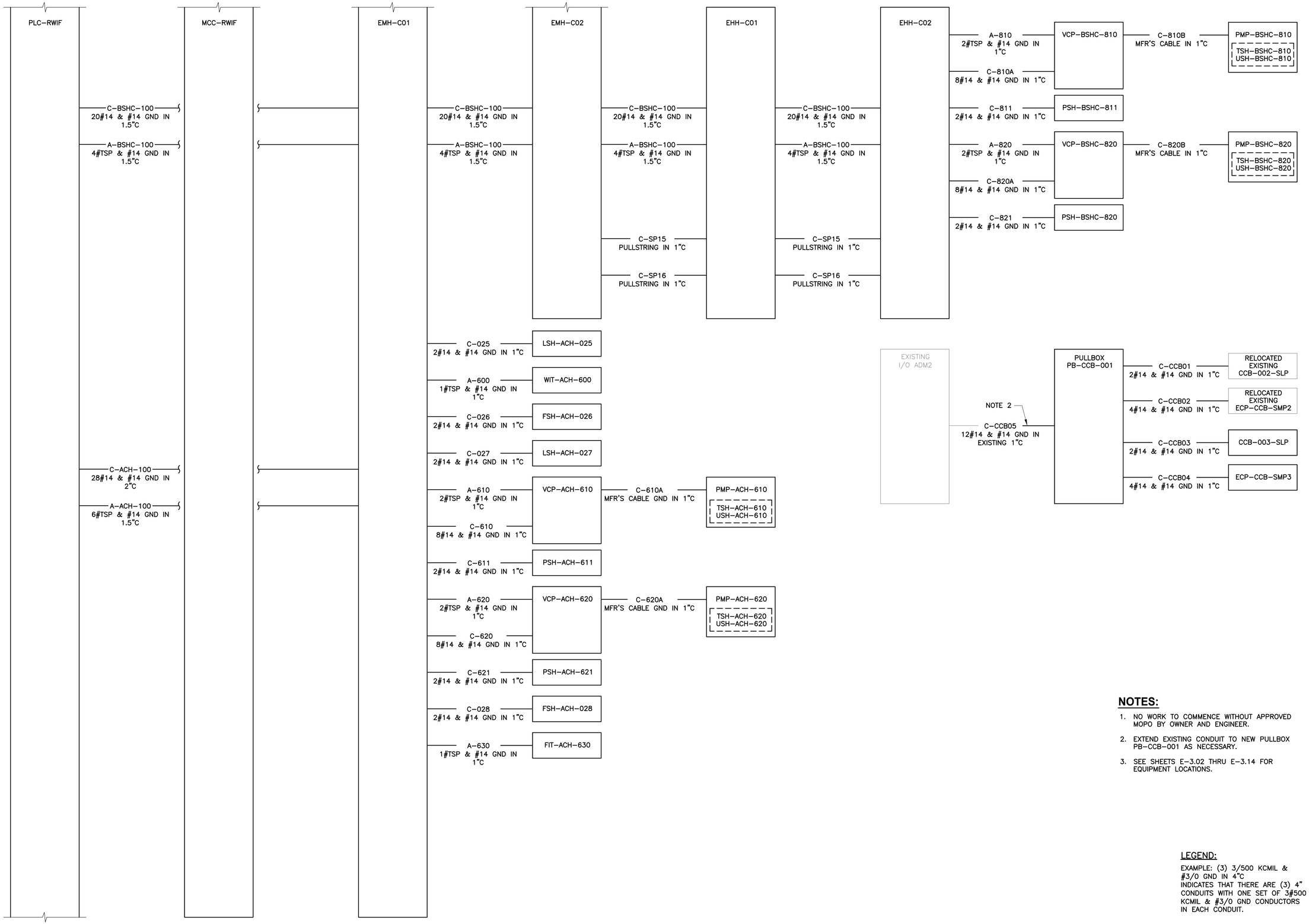

NOTES:

1. NO WORK TO COMMENCE WITHOUT APPROVED MOPO BY OWNER AND ENGINEER.
2. EXTEND EXISTING CONDUIT TO NEW PULLBOX PB–CCB–001 AS NECESSARY.
3. SEE SHEETS E–3.02 THRU E–3.14 FOR EQUIPMENT LOCATIONS.

LEGEND:

EXAMPLE: (3) 3/500 KCMIL & #3/0 GND IN 4"C
INDICATES THAT THERE ARE (3) 4" CONDUITS WITH ONE SET OF 3#500 KCMIL & #3/0 GND CONDUCTORS IN EACH CONDUIT.

1620 West Fountainhead Pkwy
Suite 501
Tempe, Arizona 85282
Phone: (480) 893-8860
Improving Arizona's Infrastructure Since 1942

WILSON ENGINEERS

CITY OF CHANDLER
RECLAIMED WATER INTERCONNECT FACILITY

RWIF CONTROL
CONDUIT BLOCK DIAGRAM 11

CITY PROJECT NO. WW1901.203
WILSON PROJECT NO. 21007

Revision	Date	By	Description

Design: ER
Date: 02/2022
Drawn: ER
Checked: PKP
Wilson Project No.: 21007

VERIFY SCALES
BAR IS ONE INCH ON ORIGINAL DRAWING
0 1"
IF NOT ONE INCH ON THIS SHEET, ADJUST SCALES ACCORDINGLY

Registered Professional Engineer
68430
PHANI KIRAN PEDDINTI
DATE SIGNED 02-23-2022
ARIZONA U.S.A.

Sheet No. **E–5.16**

XREFS: TB–WE–D; SEAL–PKP; SIGN–PKP

G:\PROJECT\21007\CADD\DESIGN\ELECTRICAL\21007 E–5.16.DWG, 2/23/2022 12:50:29 PM, PPeddinti, 1:1

AGENCY REVIEW

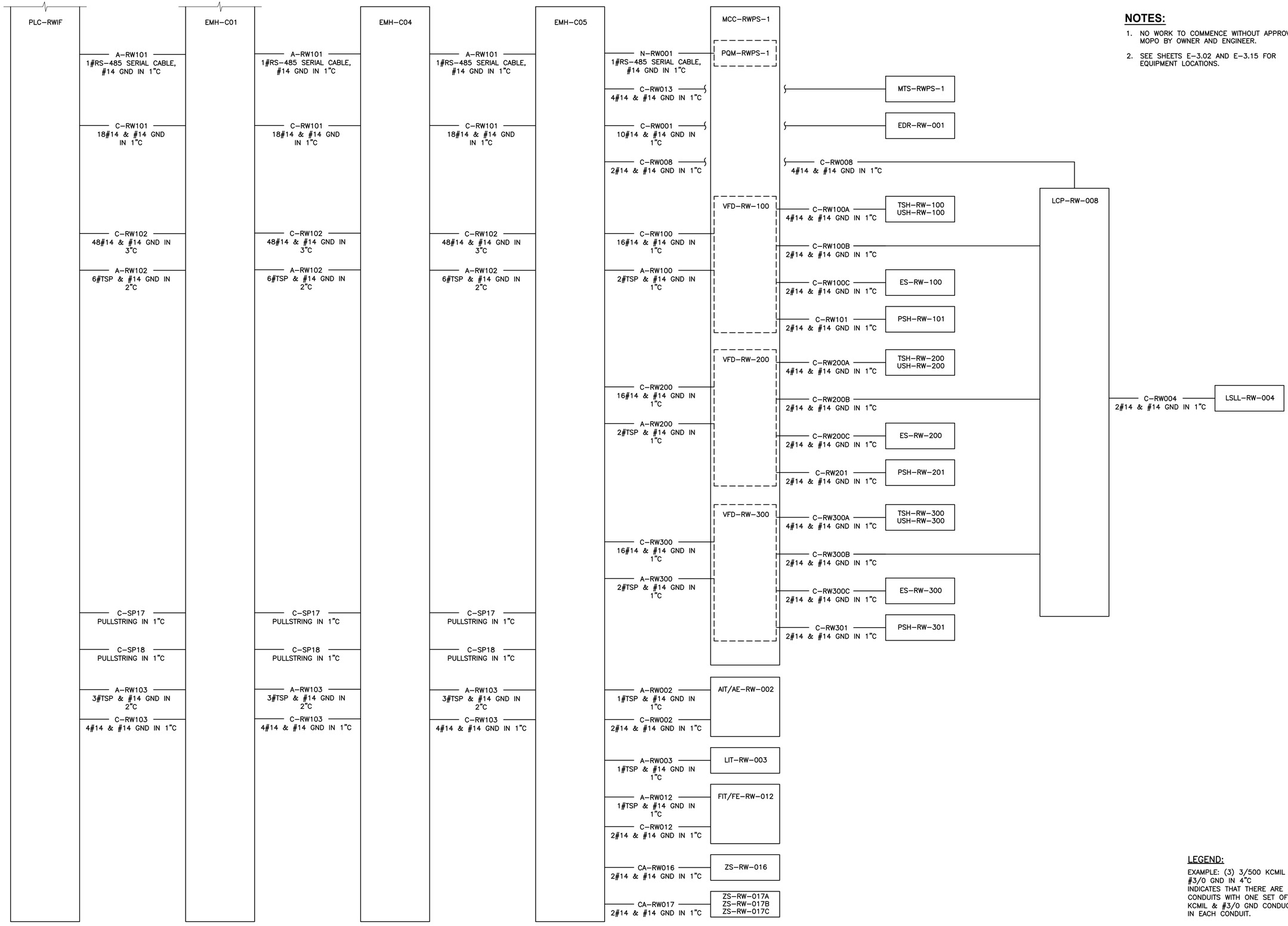

NOTES:

1. NO WORK TO COMMENCE WITHOUT APPROVED MOPO BY OWNER AND ENGINEER.
2. SEE SHEETS E–3.02 AND E–3.15 FOR EQUIPMENT LOCATIONS.

LEGEND:

EXAMPLE: (3) 3/500 KCMIL & #3/0 GND IN 4"C
INDICATES THAT THERE ARE (3) 4" CONDUITS WITH ONE SET OF 3#500 KCMIL & #3/0 GND CONDUCTORS IN EACH CONDUIT.

1620 West Fountainhead Pkwy
Suite 501
Tempe, Arizona 85282
Phone: (480) 893-8860
Improving Arizona's Infrastructure Since 1942

WILSON ENGINEERS

CITY OF CHANDLER
RECLAIMED WATER INTERCONNECT FACILITY

RWPS CONTROL
CONDUIT BLOCK DIAGRAM

CITY PROJECT NO. WW1901.203
WILSON PROJECT NO. 21007

Design: ER | Drawn: ER | Checked: PKP
Date: 02/2022 | Wilson Project No.: 21007

Revision	Date	Description	By

VERIFY SCALES
BAR IS ONE INCH ON ORIGINAL DRAWING
0 1"
IF NOT ONE INCH ON THIS SHEET, ADJUST SCALES ACCORDINGLY

Registered Professional Engineer
68430
PHANI KIRAN PEDDINTI
DATE SIGNED 02-23-2022
ARIZONA U.S.A.

Sheet No. **E–5.17**

AGENCY REVIEW

XREFS: TB–WE–D; SEAL–PKP; SIGN–PKP

G:\PROJECT\21007\CADD\DESIGN\ELECTRICAL\21007 E–5.17.DWG, 2/23/2022 12:50:32 PM, PPeddinti, 1:1

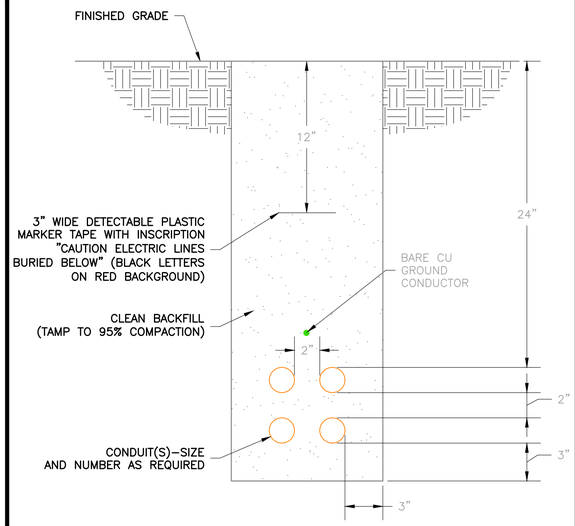

NOTES:

1. GROUND CONDUCTOR SHALL RUN CONTINUOUSLY THROUGH MANHOLES AND SHALL CONTINUE FROM DUCTBANK INTO SWITCHGEAR OR BUILDING GROUNDING SYSTEM AND SHALL BE BONDED TO EACH RIGID METAL CONDUIT. SIZE TO BE #4/0 UNLESS OTHERWISE INDICATED ON PLANS.
2. ALL DIMENSIONS ARE MINIMUM.

101 TYP — DUCTBANK – DIRECT BURIED
NOT TO SCALE

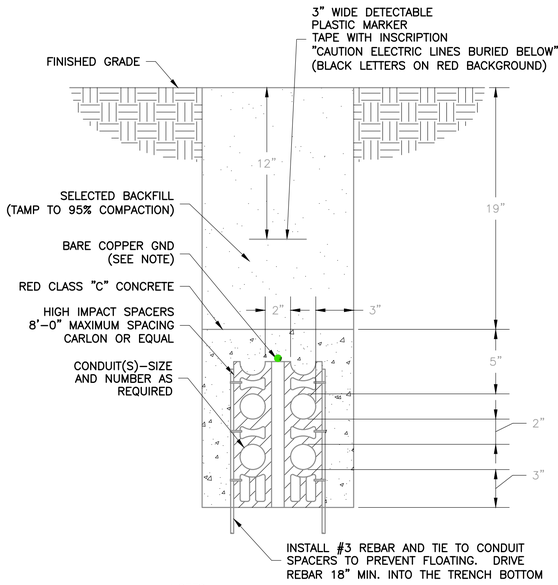

NOTES:

1. GROUND CONDUCTOR SHALL RUN CONTINUOUSLY THROUGH MANHOLES AND SHALL CONTINUE FROM DUCTBANK INTO SWITCHGEAR OR BUILDING GROUNDING SYSTEM AND SHALL BE BONDED TO EACH RIGID METAL CONDUIT. SIZE TO BE #4/0 UNLESS OTHERWISE INDICATED ON PLANS.
2. ALL DIMENSIONS ARE MINIMUM.

105 TYP — DUCTBANK – CONCRETE ENCASED
NOT TO SCALE

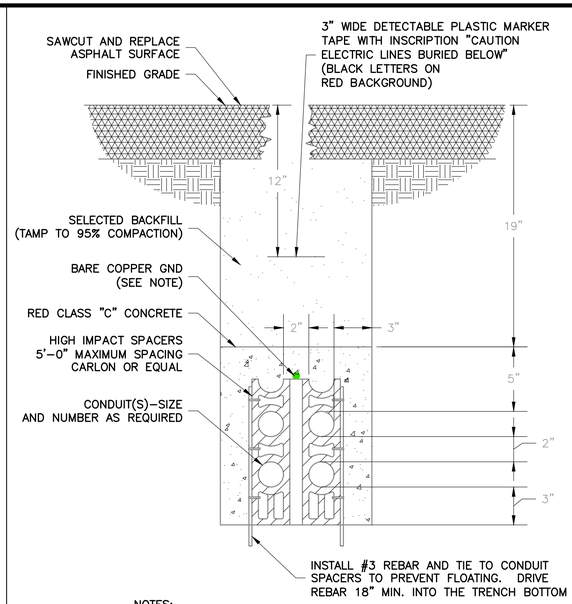

NOTES:

1. GROUND CONDUCTOR SHALL RUN CONTINUOUSLY THROUGH MANHOLES AND SHALL CONTINUE FROM DUCTBANK INTO SWITCHGEAR OR BUILDING GROUNDING SYSTEM AND SHALL BE BONDED TO EACH RIGID METAL CONDUIT. SIZE TO BE #2 UNLESS OTHERWISE INDICATED ON PLANS.
2. ALL DIMENSIONS ARE MINIMUM.

106 TYP — DUCTBANK – CONCRETE ENCASED
NOT TO SCALE

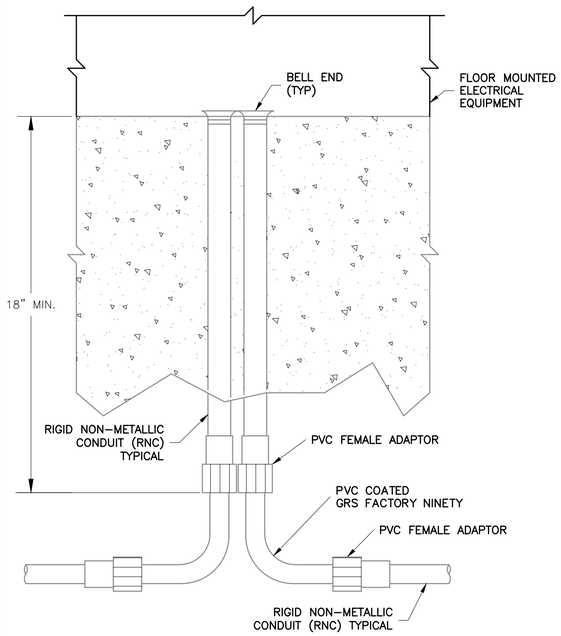

149 TYP — RNC RISER UNDER GEAR DETAIL
NOT TO SCALE

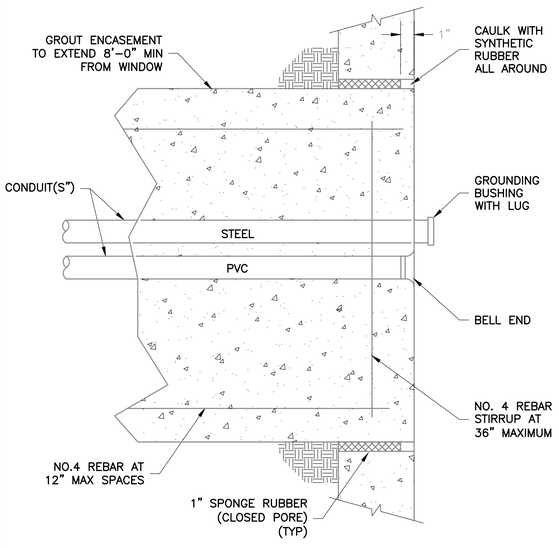

150 TYP — DUCTBANK TERMINATION AT M.H. OR STRUCTURES
NOT TO SCALE

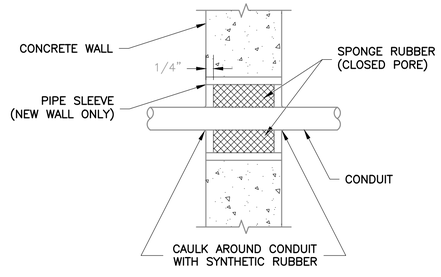

NOTE:
IN EXISTING WALL, CORE DRILL HOLE CONDUIT O.D. +1–1/2". IN NEW CONCRETE, WALL OR DRY WALL.

152 TYP — CONDUIT THROUGH CONCRETE WALL
NOT TO SCALE

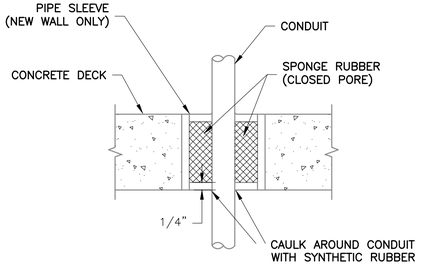

NOTE:
IN EXISTING DECK, CORE DRILL HOLE CONDUIT O.D. +1–1/2". IN NEW CONCRETE DECK.

158 TYP — CONDUIT THROUGH CONCRETE DECK
NOT TO SCALE

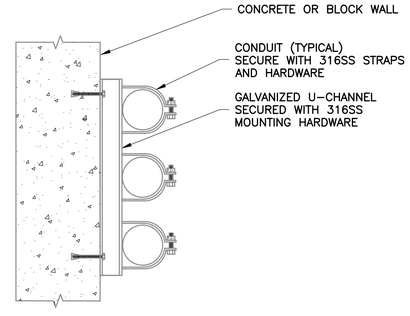

161 TYP — CONDUIT ON WALL INSTALLATION DETAIL
NOT TO SCALE

1620 West Fountainhead Pkwy
Suite 501
Tempe, Arizona 85282
Phone: (480) 893-8860
Improving Arizona's Infrastructure Since 1942

WILSON ENGINEERS

CITY OF CHANDLER
RECLAIMED WATER INTERCONNECT FACILITY

STANDARD ELECTRICAL DETAILS 1

CITY PROJECT NO. WW1901.203
WILSON PROJECT NO. 21007

Design: ER	Drawn: ER	Checked: PKP
Date: 02/2022	Wilson Project No.: 21007	

Revision	Date	Description	By

VERIFY SCALES
BAR IS ONE INCH ON ORIGINAL DRAWING
0 1"
IF NOT ONE INCH ON THIS SHEET, ADJUST SCALES ACCORDINGLY

68430 PHANI KIRAN PEDDINTI — REGISTERED PROFESSIONAL ENGINEER — DATE SIGNED 02-23-2022 — ARIZONA U.S.A.

Sheet No. **E–6.01**

XREFS: TB-WE-D; SEAL-PKP; SIGN-PKP

G:\PROJECT\21007\CADD\DESIGN\ELECTRICAL\21007 E-6.01.DWG, 2/23/2022 12:50:34 PM, PPeddinti, 1:1

AGENCY REVIEW

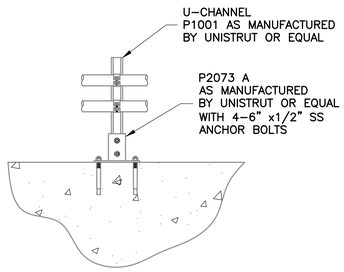

163 TYP — CONDUIT MOUNTING
NOT TO SCALE

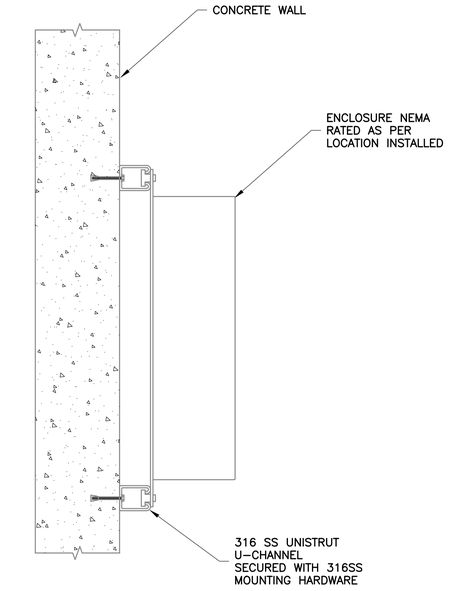

167 TYP — WALL MOUNTED ENCLOSURE DETAIL
NOT TO SCALE

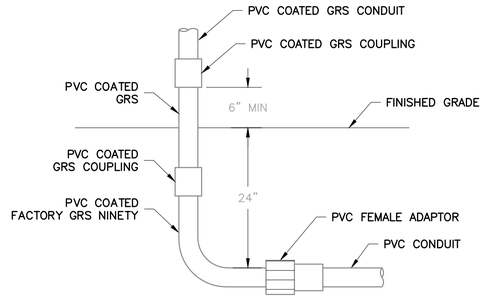

NOTES:

WHERE CONDUITS ARE INSTALLED IN A CONCRETE SLAB, THE 24" DIMENSION DOES NOT APPLY. CONDUITS SHALL BE INSTALLED BETWEEN REBAR MATS OR UNDER A SINGLE REBAR MAT.

IN CORROSIVE AREAS, PVC COATED GRS SHALL BE USED.

171 TYP — PVC COATED GRS STUB UP DETAIL
NOT TO SCALE

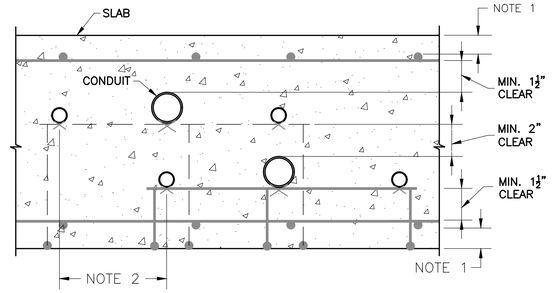

NOTES:

1. SEE STRUCTURAL DRAWINGS FOR DETAILS OF CONCRETE REINFORCEMENT.
2. MININMUM ON CENTER HORIZONTAL SPACING OF PARALLEL CONDUITS = 4X OUTSIDE DIAMETER OF THE LARGER CONDUIT.
3. SUPPORT CONDUITS ON ADDED REINFORCEMENT CHAIRS OR BOLSTERS. TIE CONDUITS TO SUPPORTS AND ANCHOR TO PREVENT FLOATATION.
4. WHERE MORE THAN 2 RUNS ARE STACKED, PROVIDE HORIZONATAL AND VERTICAL SPACING SHOWN BETWEEN EACH PAIR.

190 TYP — EMBEDDED CONDUIT IN CONCRETE SLAB
STACKED RUNS

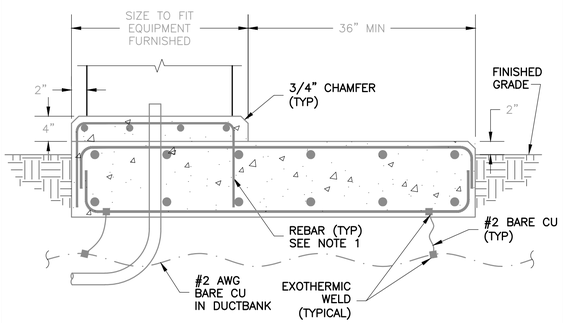

NOTES:

1. CONCRETE PAD MUST BE SIGNED AND SEALED BY STRUCTURAL ENGINEER.

204 TYP — EQUIPMENT PAD DETAIL
SEE STRUCTURAL DWGS FOR BASE DETAILS

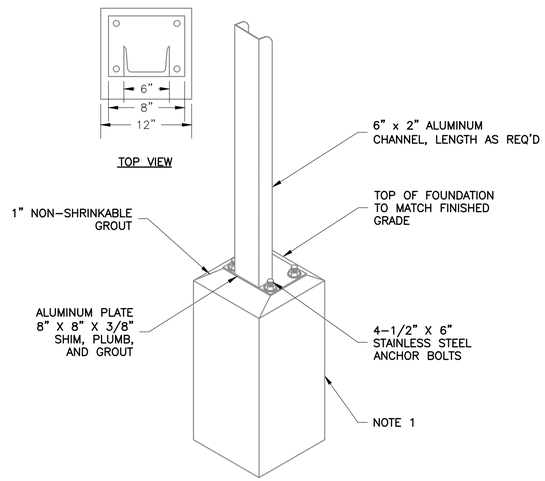

NOTES:

1. SEE STRUCTURAL DRAWINGS FOR DETAILS OF CONCRETE BASE.

205 TYP — EQUIPMENT MOUNTING
SEE STRUCTURAL DWGS FOR BASE DETAILS

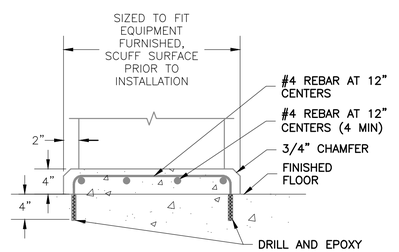

NOTES:

1. SEE STRUCTURAL DRAWINGS FOR DETAILS OF CONCRETE PAD.

206 TYP — EQUIPMENT PAD DETAIL
NOT TO SCALE

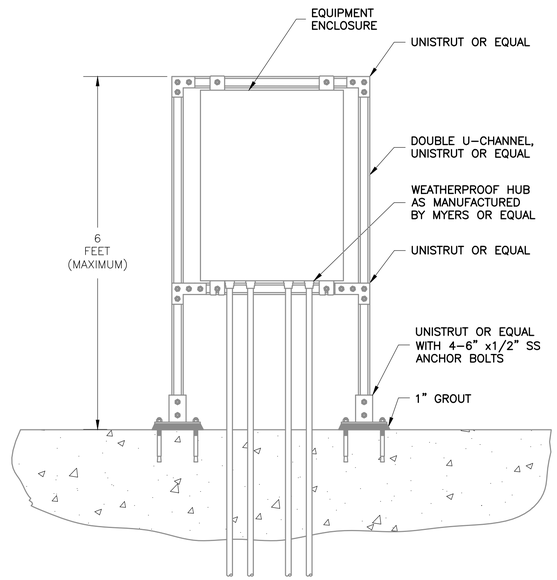

207 TYP — EQUIPMENT RACK DETAIL – NON-CLASSIFIED AREAS
NOT TO SCALE

1620 West Fountainhead Pkwy
Suite 501
Tempe, Arizona 85282
Phone: (480) 893-8860
Improving Arizona's
Infrastructure Since 1942

WILSON ENGINEERS

CITY OF CHANDLER
RECLAIMED WATER INTERCONNECT FACILITY

STANDARD ELECTRICAL DETAILS 2

CITY PROJECT NO. WW1901.203
WILSON PROJECT NO. 21007

Design: ER
Date: 02/2022
Drawn: ER
Wilson Project No.: 21007
Checked: PKP

Revision	Date	Description	By

VERIFY SCALES
BAR IS ONE INCH ON ORIGINAL DRAWING
0 1"
IF NOT ONE INCH ON THIS SHEET, ADJUST SCALES ACCORDINGLY

Registered Professional Engineer
68430
PHANI KIRAN
PEDDINTI
DATE SIGNED 02-23-2022
ARIZONA U.S.A.

Sheet No. **E-6.02**

XREFS: TB-WE-D; SEAL-PKP; SIGN-PKP

G:\PROJECT\21007\CADD\DESIGN\ELECTRICAL\21007 E-6.02.DWG, 2/23/2022 12:50:37 PM, PPeddinti, 1:1

AGENCY REVIEW

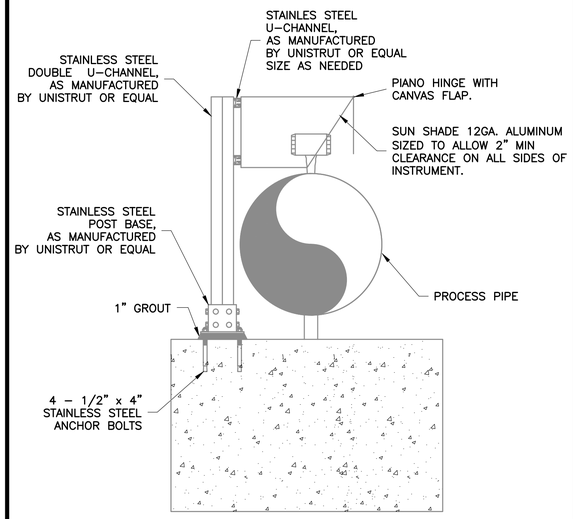

221 TYP — INSTRUMENT SUN SHADE DETAIL
NOT TO SCALE

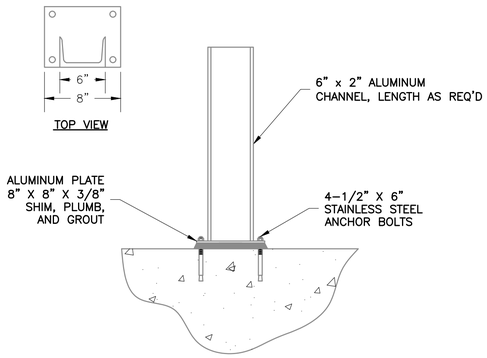

224 TYP — EQUIPMENT STAND
NOT TO SCALE

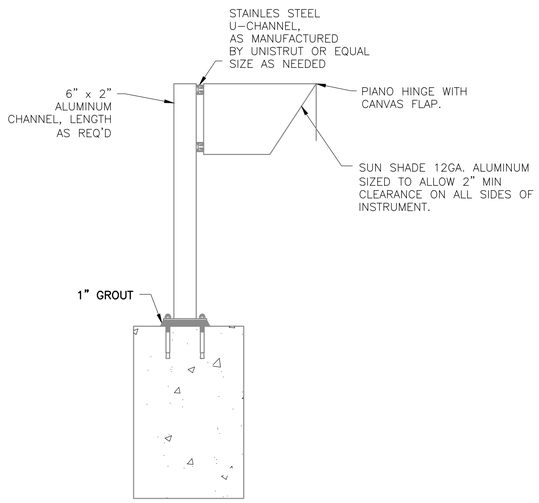

225 TYP — SUN SHADE DETAIL
NOT TO SCALE

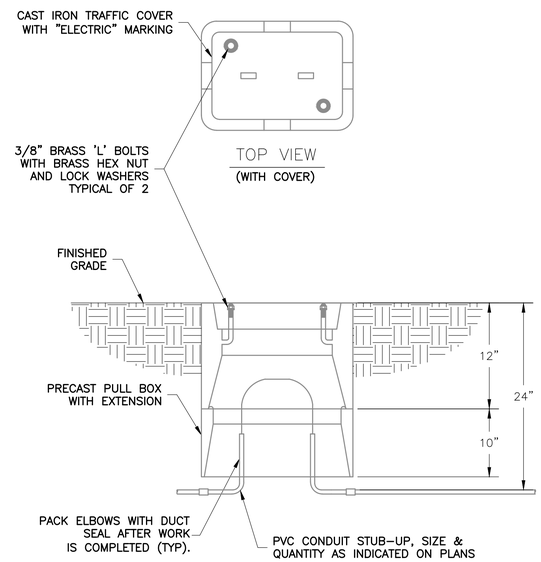

NOTE: ALL DIMENSIONS ARE MINIMUM

315 TYP — UNDERGROUND CONCRETE HANDHOLE
NOT TO SCALE

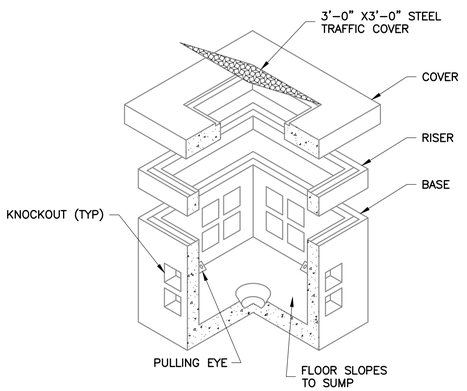

NOTES:
3'–11" x 3'–11" x 4'–1" MINIMUM INSIDE DIMENSIONS.
INSTALL A GROUND ROD AND CONNECT TO DUCT BANK GROUND.
TRAIN CABLES AROUND INTERIOR PERIMETER ON CABLE RACKS.

333 TYP — CONCRETE MANHOLE WITH HINGED COVER
NOT TO SCALE

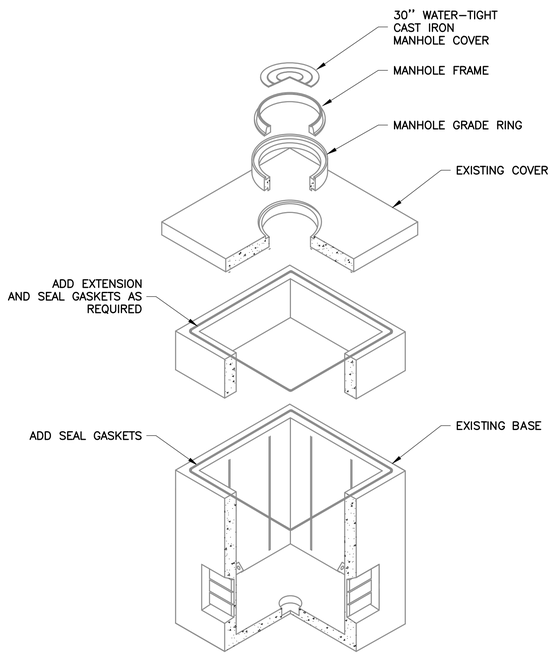

NOTES:
INSTALL MANHOLE EXTENSIONS AND SEAL WITH GASKETS TO PREVENT WATER COLLECTING FROM ENTERING THE MANHOLE.

355 TYP — MEDIUM VOLTAGE ELECTRICAL MANHOLE
NOT TO SCALE

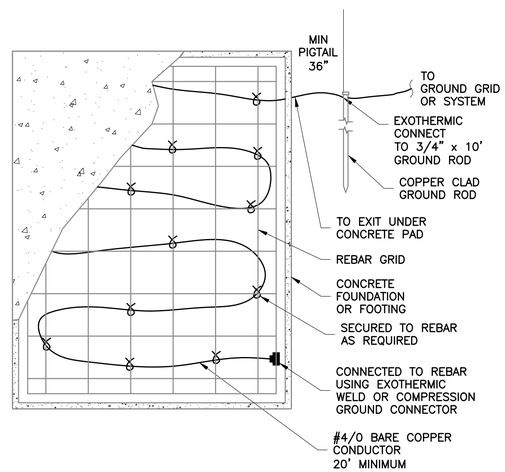

402 TYP — "UFER" GROUNDING DETAIL
NOT TO SCALE

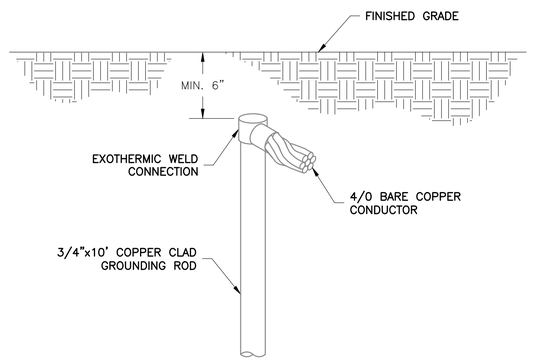

403 TYP — EXOTHERMIC GROUND ROD CONNECTION
NOT TO SCALE

1620 West Fountainhead Pkwy
Suite 501
Tempe, Arizona 85282
Phone: (480) 893-8860
Improving Arizona's
Infrastructure Since 1942

WILSON ENGINEERS

CITY OF CHANDLER
RECLAIMED WATER INTERCONNECT FACILITY

STANDARD ELECTRICAL DETAILS 3

CITY PROJECT NO. WW1901.203
WILSON PROJECT NO. 21007

Design: ER	Drawn: ER	Checked: PKP
Date: 02/2022	Wilson Project No.: 21007	

Revision	Date	Description	By

VERIFY SCALES
BAR IS ONE INCH ON ORIGINAL DRAWING
0 1"
IF NOT ONE INCH ON THIS SHEET, ADJUST SCALES ACCORDINGLY

Registered Professional Engineer
68430
PHANI KIRAN PEDDINTI
DATE SIGNED 02-23-2022
ARIZONA U.S.A.

Sheet No. **E–6.03**

XREFS: TB–WE–D; SEAL–PKP; SIGN–PKP

G:\PROJECT\21007\CADD\DESIGN\ELECTRICAL\21007 E–6.03.DWG, 2/23/2022 12:50:41 PM, PPeddinti, 1:1

AGENCY REVIEW

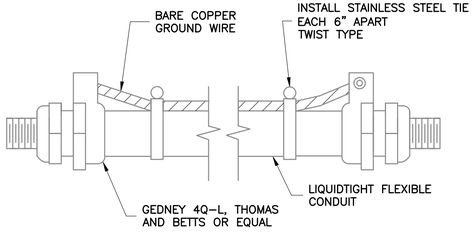

NOTES:

1. TO BE USED FOR FLEXIBLE CONDUITS TRADE SIZES ABOVE 1 1/4".
2. TO BE USED FOR FLEXIBLE CONDUITS THAT ARE PROTECTED BY OVERCURRENT DEVICES RATED MORE THAN 60 AMPS.

404 TYP — FLEXIBLE CONDUIT BONDING JUMPER
NOT TO SCALE

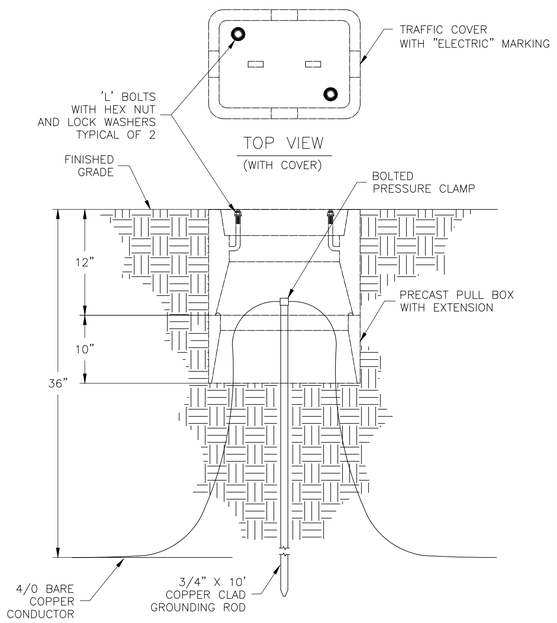

406 TYP — GROUND ROD WITH ACCESS WELL DETAIL
NOT TO SCALE

NOTES:

1. CONCRETE BASE MUST BE SIGNED AND SEALED BY STRUCTURAL ENGINEER.

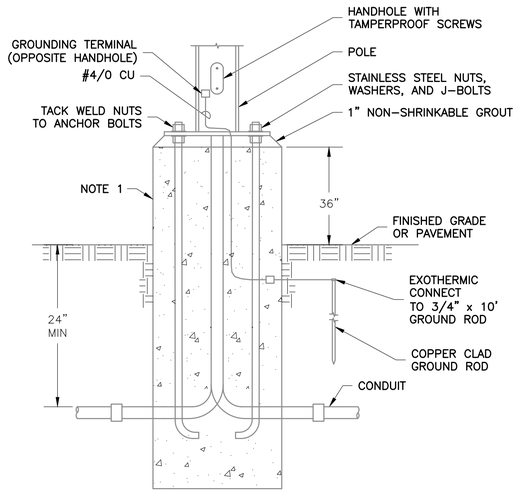

502 TYP — AREA LIGHTING POLE MOUNTING TALL BASE
SEE STRUCTURAL DWGS FOR BASE DETAILS

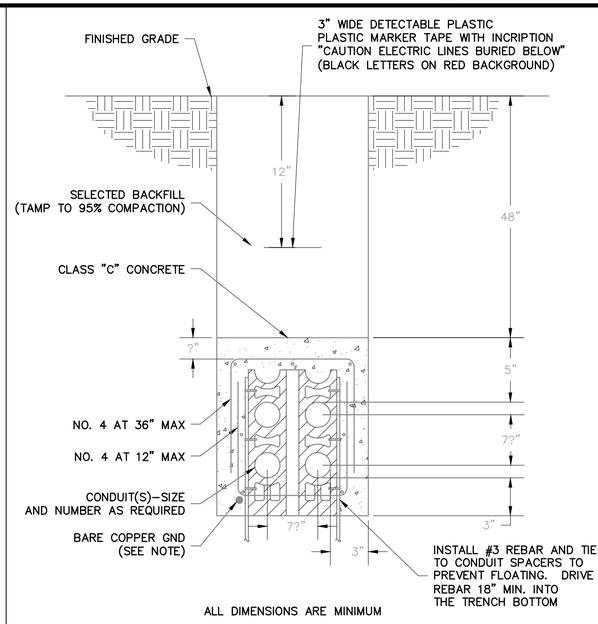

ALL DIMENSIONS ARE MINIMUM

NOTE:
GROUND CONDUCTOR SHALL RUN CONTINUOUSLY THROUGH MANHOLES AND SHALL CONTINUE FROM DUCT BANK INTO SWITCHGEAR OR BUILDING GROUNDING SYSTEM AND SHALL BE BONDED TO EACH RIGID METAL CONDUIT. SIZE TO BE #2 UNLESS OTHERWISE INDICATED ON PLANS.

627 TYP — MEDIUM VOLTAGE REINFORCED CONDUIT ENCASEMENT
NTS

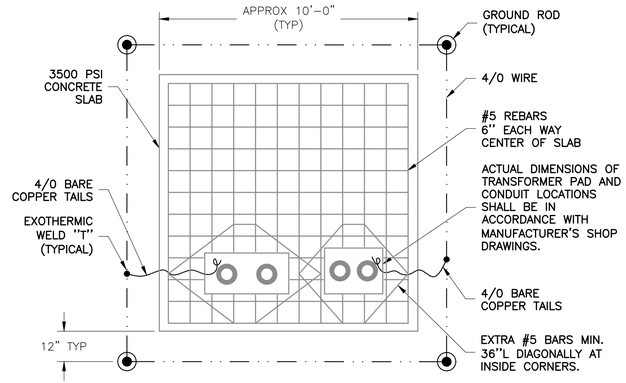

649 TYP — TYPICAL TRANSFORMER PAD
NOT TO SCALE

NOTES:

1. CONCRETE BASE MUST BE SIGNED AND SEALED BY STRUCTURAL ENGINEER.

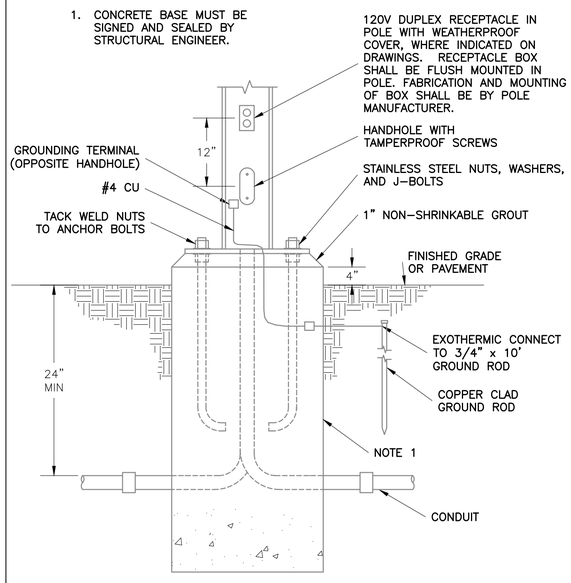

501 TYP — AREA LIGHTING POLE MOUNTING SHORT BASE
SEE STRUCTURAL DWGS FOR BASE DETAILS

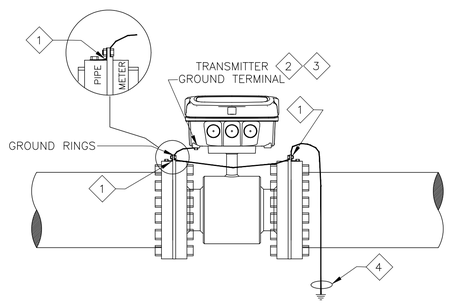

1. PROVIDE BONDING JUMPER ON CONDUCTIVE PIPES
2. CONTRACTOR SHALL VERIFY ZERO POTENTIAL BETWEEN FLOW TUBE, EARTH GROUND AND TRANSMITTER GROUND TERMINAL.
3. CONNECT TRANSMITTER GROUND TERMINAL TO GROUND RINGS
4. CONNECT METER BODY TO EARTH GROUND POTENTIAL

722 TYP — MAGNETIC FLOWMETER GROUNDING DETAIL
NOT TO SCALE

1620 West Fountainhead Pkwy
Suite 501
Tempe, Arizona 85282
Phone: (480) 893-8860
Improving Arizona's Infrastructure Since 1942

WILSON ENGINEERS

CITY OF CHANDLER
RECLAIMED WATER INTERCONNECT FACILITY

STANDARD ELECTRICAL DETAILS 4

CITY PROJECT NO. WW1901.203
WILSON PROJECT NO. 21007

Design: ER	Drawn: ER	Checked: PKP
Date: 02/2022	Wilson Project No.: 21007	

Revision	Date	Description	By

VERIFY SCALES
BAR IS ONE INCH ON ORIGINAL DRAWING
0 1"
IF NOT ONE INCH ON THIS SHEET, ADJUST SCALES ACCORDINGLY

Professional Engineer Certificate
68430
PHANI KIRAN PEDDINTI
ARIZONA U.S.A.
DATE SIGNED 02-23-2022

Sheet No. **E-6.04**

XREFS: TB-WE-D; SEAL-PKP; SIGN-PKP

G:\PROJECT\21007\CADD\DESIGN\ELECTRICAL\21007 E-6.04.DWG, 2/23/2022 12:50:44 PM, PPeddinti, 1:1

AGENCY REVIEW

LINE SYMBOLS

- MAJOR PROCESS PIPING OR FLOW CHANNEL
- EXISTING PROCESS PIPING
- SECONDARY PROCESS PIPING
- EXISTING SECONDARY PROCESS PIPING
- MISCELLANEOUS PIPING
- EXISTING PIPING AND EQUIPMENT
- FUTURE PIPING AND EQUIPMENT
- ELECTRICAL SIGNAL
- HYDRAULIC SIGNAL
- PNEUMATIC SIGNAL
- ELECTRICAL DIRECTION ARROW
- FLOW ARROW FOR PROCESS PIPING
- PROCESS OR SIGNAL LINE GOING TO ANOTHER SHEET (MATCH LETTERS) — I–3 /A
- PROCESS OR SIGNAL LINE FROM ANOTHER SHEET (MATCH LETTERS) — I–2 /A
- PROCESS LINES CROSSING
- DATA COMMUNICATIONS LINK
- VENDOR PACKAGE BOUNDARY

P&ID ABBREVIATIONS

A	AMPERE
AFD	ADJUSTABLE FREQUENCY DRIVE
AI	ANALOG INPUT
AIC	AMPS INTERRUPTING CAPACITY
ARV	AIR RELIEF VALVE
AO	ANALOG OUTPUT
ABE	ANOXIC BASIN EFFLUENT
AS	AIR SUPPLY
ATS	AUTOMATIC TRANSFER SWITCH
AUTO	AUTOMATIC
CB	CIRCUIT BREAKER
CH	CHEMICAL
CL2	CHLORINE
CON	CONTACTOR
CU	COPPER
CV	CONTROL VALVE
DCS	DISTRIBUTED CONTROL SYSTEM
DI	DISCRETE INPUT
DO	DISSOLVED OXYGEN, DISCRETE OUTPUT
DP	DIFFERENTIAL PRESSURE
DWG	DRAWING
EGO	EMERGENCY GAS OFF
ETM	ELAPSED TIME METER
ETMf	ELAPSED TIME METER (FAST SPEED)
ETMs	ELAPSED TIME METER (SLOW SPEED)
EOL	ELECTRONIC OVERLOAD
EXIST	EXISTING
FA	FOUL AIR
FC	FAIL CLOSED
FE	FINAL EFFLUENT
FR	FORWARD–REVERSE
FS	FLOAT SWITCH
FVNR	FULL VOLTAGE NON–REVERSING
FW	FINISHED WATER
GND	GROUND
GAL	GALLONS
GPD	GALLONS PER DAY
GPH	GALLONS PER HOUR
GPM	GALLONS PER MINUTE
H, HI	HIGH
H2S	HYDROGEN SULFIDE
HMI	HUMAN MACHINE INTERFACE
HS	HAND SWITCH
HMS	HAND SWITCH MAINTAINED
HOA	HAND–OFF–AUTO
I	CURRENT
IO	INPUT/OUTPUT
IOE	INTERNAL–OFF–EXTERNAL
IP	CURRENT/PRESSURE TRANSDUCER
JB	JUNCTION BOX
L, LO	LOW
LAN	LOCAL AREA NETWORK
LC	LOOP CONTROLLER
LCP	LOCAL CONTROL PANEL
LOS	LOCK–OFF–STOP
LR	LOCAL/REMOTE
LS	LEVEL (i.e.. FLOAT) SWITCH
M	MOTOR
MA	MANUAL/AUTO
mA	MILLIAMP
MC	MANUFACTURE CABLE
MCC	MOTOR CONTROL CENTER
MCP	MOTOR CIRCUIT PROTECTOR
MFR(S)	MANUFACTURER(S)
MGD	MILLION GALLONS PER DAY
MGL	MILLIGRAMS PER LITER
MH	MANHOLE
MLR	MIXED LIQUOR RETURN
MO	MOISTURE
MOD	MODULATED
MTU	MASTER TELEMETRY UNIT
NPW	NON–POTABLE WATER
NS	NITROGEN SUPPLY
NTU	TURBIDITY
O/C	OPEN / CLOSE
OCA	OPEN–CLOSE–AUTO
OCR	OPEN–CLOSE–REMOTE
OIT	OPERATOR INTERFACE TERMINAL
OL	OVERLOAD
OO	ON/OFF (MAINTAINED)
OOA	ON–OFF–AUTO
OOR	ON–OFF–REMOTE
OSC	OPEN–STOP–CLOSE
PAH	PRESSURE ALARM HIGH
PER	PERMISSIVE
PLC	PROGRAMMABLE LOGIC CONTROLLER
PNL	PANEL
PO	PULSE OUTPUT
POP	PNEUMATIC OPERATOR
POS	POSITION
POT	POTENTIOMETER
PPG	POUNDS PER GALLON
PPH	POUNDS PER HOUR
PPM	PARTS PER MILLION
PR	PAIR
PRES	PRESSURE
PS	PRESSURE SWITCH
PSI	POUNDS PER SQUARE INCH
PV	PROCESS VARIABLE
RAS	RETURN ACTIVATED SLUDGE
RAW	RAW WATER
REM	REMOTE
RF	RADIO FREQUENCY
RIO	REMOTE INPUT OUTPUT
RS	RAW SEWAGE
RSP	RAW SEWAGE PUMP
RST	RESET
RTD	RESISTANCE TEMPERATURE DETECTOR
RTU	REMOTE TELEMETRY UNIT
RUNf	RUN (FAST SPEED)
RUNs	RUN (SLOW SPEED)
SB	SLUDGE BLANKET
SEQ	SERVICE ENTRANCE EQUIPMENT
SES	SERVICE ENTRANCE SECTION
SLC	SINGLE LOOP CONTROLLER
SLOS	START–LOCK–OFF–STOP
SO2	SULFUR DIOXIDE
SOV	SOLENOID OPERATED VALVE
SP	SET POINT
SPD	SPEED
SPR	SPARE
SS	START/STOP (MAINTAINED)
SSS	SOLID STATE STARTER (SOFT START)
STR	MOTOR STARTER
TAH	TEMPERATURE ALARM HIGH
T/M	TEMPERATURE AND/OR MOISTURE
TEMP	TEMPERATURE
TS	TEMPERATURE SWITCH
TSS	TOTAL SUSPENDED SOLIDS
UG	UNDERGROUND
USD	UP/STOP/DOWN
V	VOLT
VFD	VARIABLE FREQUENCY DRIVE
W	WATER
WAS	WASTE ACTIVATED SLUDGE
WW	WASTEWATER
XMTR	TRANSMITTER
ZS	POSITION (i.e. LIMIT) SWITCH

ISA INSTRUMENT IDENTIFICATION TABLE

	FIRST LETTERS		SUCCEEDING LETTERS		
	MEASURED OR INITIATING VARIABLE	MODIFIER	READOUT OR PASSIVE FUNCTION	OUTPUT FUNCTION	MODIFIER
A	ANALYZER		ALARM		AUTO
B	BURNER, COMBUSTION				
C	CONDUCTIVITY			CONTROL	CLOSED
D	DENSITY	DIFFERENTIAL			
E	VOLTAGE		ELEMENT		
F	FLOW	RATIO			
G	GAUGE		GLASS, VIEWING DEVICE		
H	HAND				HIGH
I	CURRENT		INDICATE		
J	POWER	SCAN			
K	TIME, TIME SCHED.	TIME RATE OF CHANGE		CONTROL STATION	
L	LEVEL		LIGHT		LOW
M	MOTION				MIDDLE
N	INTRUSION				NORMAL
O	TORQUE		ORIFICE, RESTRICTION		OPEN
P	PRESSURE		POINT CONNECTION		STOP
Q	QUANTITY	INTEGRATE, TOTALIZE			
R	RADIATION		RECORD, OR PRINT		RUN OR REMOTE
S	SPEED, FREQUENCY	SAFETY		SWITCH	START
T	TEMPERATURE			TRANSMIT	
U	MULTIVARIABLE		MULTIFUNCTION	MULTIFUNCTION	MULTIFUNCTION
V	VIBRATION			VALVE, LOUVER	
W	WEIGHT		WELL		
X	MOTOR	X–AXIS	UNCLASSIFIED	UNCLASSIFED	UNCLASSIFED
Y	EVENT, STATE, OR PRESENCE	Y–AXIS		RELAY, COMPUTE, CONVERT	
Z	POSITION	Z–AXIS		DRIVER, ACTUATOR, FINAL CONTROL ELEMENT	

TAG NUMBERS AND DESIGNATIONS

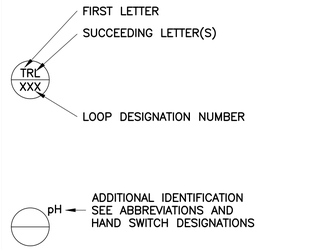

HAND SWITCH DESIGNATIONS

ES	EMERGENCY STOP
HOA	HAND–OFF–AUTO
HOR	HAND–OFF–REMOTE
HORA	HAND–OFF–REMOTE–AUTO
JOA	JOG–OFF–AUTO
LOR	LOCAL–OFF–REMOTE
LR	LOCAL–REMOTE
OC	OPEN–CLOSE
OO	ON–OFF
S/S	START STOP PUSH BUTTONS

P&ID INTERFACE SYMBOLS

- AAA / BBB / X — PILOT LIGHT X= LENS COLOR, R=RED, G=GREEN, A=AMBER B=BLUE
- AAA / BBB / CCC — FIELD DEVICE
- AAA / BBB / CCC — PANEL DEVICE
- AAA / BBB / CCC — DEVICE MOUNTED IN SUBPANEL
- BBB / CCC / XX — REMOTE I/O TERMINAL
- BBB / CCC — HMI OR OIT FUNCTION
- I / X — INTERLOCK DEVICE X=NOTE REF.
- I/I — DUAL CHANNEL CURRENT ISOLATOR
- DISCRETE INPUT
- DISCRETE OUTPUT
- ANALOG INPUT
- ANALOG OUTPUT
- PULSE INPUT
- R — RELAY
- Ix — INTERLOCK VIA RELAYS

P&ID EQUIPMENT AND PROCESS SYMBOLS

- M — MOTOR ACTUATOR
- PNUEMATIC ACTUATOR
- S — SOLENOID
- CHLORINE TANK
- WEIGHT SCALE
- AIR COMPRESSOR
- VERTICAL TURBINE PUMP
- FSL 100 — FLOW SWITCH
- FAN
- METERING PUMP WITH MANUAL STROKE CONTROL
- ROTARY LUBE PUMP
- M — SUBMERSIBLE MIXER
- M — AERATOR
- S — SUBMERSIBLE PUMP
- DIESEL GENERATOR
- CENTRIFUGAL PUMP
- BLOWER
- LIFT PUMP
- M — SUBMERSIBLE PUMP
- ROTAMETER
- AIR FILTER
- EJECTOR
- DIAPHRAGM SEAL
- DIFFUSER
- DIAPHRAGM
- Y–TYPE STRAINER
- IPS CORPORATION STOP
- PVC DIFFUSER WITH IPS CORPORATION STOP
- NTU — NEPHELOMETIC TURBIDITY METER
- MANUAL SLUICE GATE
- CHEMICAL INJECTION QUILL
- SAMPLER
- PROPELLER FLOWMETER ELEMENT
- M — MAGNETIC FLOWMETER ELEMENT
- CL2 FLOWMETER
- INSERT FIT 105 — INSERTION TYPE MASS FLOW METER
- MASS FIT 100 — MASS FLOW METER ANNUBAR TYPE
- DRAIN
- OUTLET SILENCER
- INLET SILENCER
- M — AGITATOR MIXER
- F — INLET FILTER

P&ID VALVE SYMBOLS

- GATE VALVE
- BUTTERFLY VALVE
- ECCENTRIC PLUG VALVE
- BALL VALVE
- 3 WAY VALVE
- 4 WAY VALVE
- CHECK VALVE
- SWING CHECK VALVE
- STOP CHECK VALVE
- BALL CHECK VALVE
- AIR RELEASE VALVE
- KNIFE VALVE
- PRESSURE REGULATOR VALVE
- BACKPRESSURE VALVE
- PRESSURE RELIEF VALVE
- RELIEF VALVE
- VACUUM RELIEF VALVE
- SURGE ANTICIPATOR VALVE
- PLUG VALVE
- M — MOTOR OPERATED PLUG VALVE
- S — SOLENOID VALVE
- M — MOTOR OPERATED PLUG VALVE
- M — MOTOR OPERATED GATE VALVE
- M — MOTOR OPERATED BUTTERFLY VALVE
- M — MOTOR OPERATED SLEEVE VALVE
- M — MOTOR OPERATED PINCH VALVE
- NEEDLE VALVE
- MUD VALVE
- I/P — CURRENT–TO–PRESSURE CONVERTER

SENSING, AND INDICATION SYMBOLS

- LS — FLOAT SWITCH
- BEACON R — BEACON R=RED, A=AMBER, B=BLUE, G=GREEN
- STOP YL G — INDICATING LIGHT
- HOA HS — HAND SWITCH
- ORP AIT — ORP ANALYZER
- pH AIT — pH ANALYZER
- AE — ANALYZER ELEMENT
- DO AE — DO SENSOR
- ORP AE — ORP SENSOR
- pH AE — pH SENSOR
- DO AIT — DO ANALYZER
- CL2 AE — RESIDUAL CL2 CHLORINE SENSOR
- CL2 AIT — RESIDUAL CL2 CHLORINE ANALYZER
- VT — VIBRATION TRANSMITTER
- LE — ULTRASONIC LEVEL TRANSDUCER

1620 West Fountainhead Pkwy
Suite 501
Tempe, Arizona 85282
Phone: (480) 893-8860
Improving Arizona's Infrastructure Since 1942

WILSON ENGINEERS

CITY OF CHANDLER
RECLAIMED WATER INTERCONNECT FACILITY
INSTRUMENTATION STANDARD SYMBOLS AND LEGEND
CITY PROJECT NO. WW1901.203
WILSON PROJECT NO. 21007

Design: ER	Drawn: ER	Checked: PKP		
Date: 02/2022	Wilson Project No.: 21007			
Revision	Date	Description		By

VERIFY SCALES
BAR IS ONE INCH ON ORIGINAL DRAWING
0 — 1"
IF NOT ONE INCH ON THIS SHEET, ADJUST SCALES ACCORDINGLY

Registered Professional Engineer — Phani Kiran Peddinti — 68430 — Date Signed 02-23-2022 — Arizona U.S.A.

Sheet No. I–0.00

G:\PROJECT\21007\CADD\DESIGN\INSTRUMENTATION\21007 I–0.00.DWG, 2/23/2022 12:39:05 PM, PPeddinti, 1:2.1887

AGENCY REVIEW

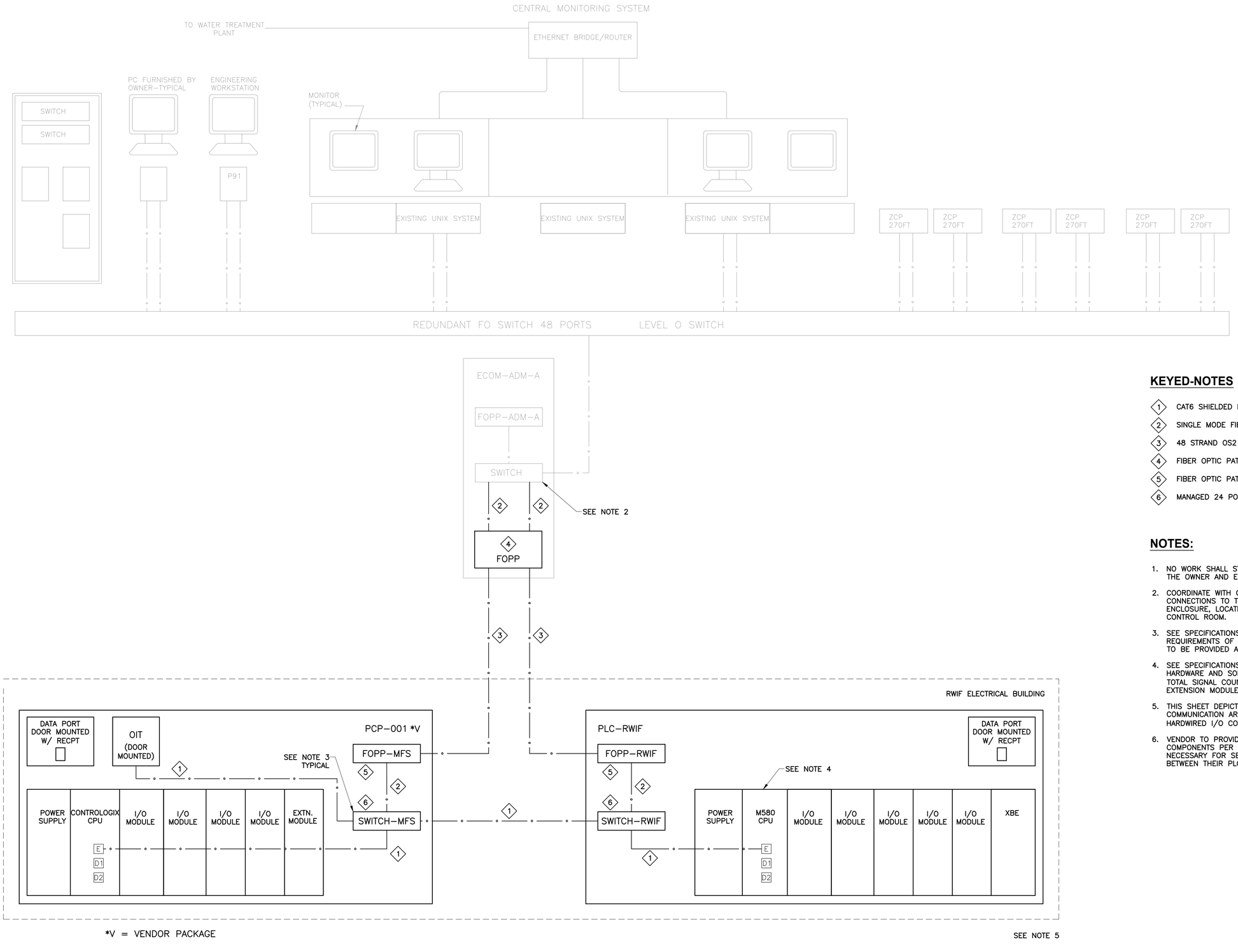

KEYED-NOTES

1. CAT6 SHIELDED ETHERNET CABLE
2. SINGLE MODE FIBER OPTIC JUMPER
3. 48 STRAND OS2 FIBER CABLE
4. FIBER OPTIC PATCH PANEL 48 PORT (MINIMUM)
5. FIBER OPTIC PATCH PANEL 24 PORT
6. MANAGED 24 PORT ETHERNET SWITCH WITH 4 SFP PORTS

NOTES:

1. NO WORK SHALL START WITHOUT A MOPO APPROVED BY THE OWNER AND ENGINEER.
2. COORDINATE WITH OWNER FOR INSTALLATION OF FOPP AND CONNECTIONS TO THE EXISTING ETHERNET SWITCH IN THIS ENCLOSURE, LOCATED IN THE ADMINISTRATION BUILDING CONTROL ROOM.
3. SEE SPECIFICATIONS 16912 AND 16913 FOR REQUIREMENTS OF ETHERNET AND FIBER OPTIC HARDWARE TO BE PROVIDED AND INSTALLED BY THE CONTRACTOR.
4. SEE SPECIFICATIONS 17461 AND 17462 FOR MODICON PLC HARDWARE AND SOFTWARE REQUIREMENTS. SEE P&IDS FOR TOTAL SIGNAL COUNT, AND PROVIDE I/O MODULES AND EXTENSION MODULES ACCORDINGLY.
5. THIS SHEET DEPICTS ONLY ETHERNET AND FIBER OPTIC COMMUNICATION ARCHITECTURE. SEE P&IDS FOR HARDWIRED I/O CONNECTIONS.
6. VENDOR TO PROVIDE SOFTWARE AND HARDWARE COMPONENTS PER SPECIFICATION 17451, 17452, AND AS NECESSARY FOR SEAMLESS ETHERNET COMMUNICATIONS BETWEEN THEIR PLC AND THE PLC–RWIF.

1620 West Fountainhead Pkwy
Suite 501
Tempe, Arizona 85282
Phone: (480) 893-8860
Improving Arizona's Infrastructure Since 1942

WILSON ENGINEERS

CITY OF CHANDLER
RECLAIMED WATER INTERCONNECT FACILITY

ETHERNET COMMUNICATION ARCHITECTURE

CITY PROJECT NO. WW1901.203
WILSON PROJECT NO. 21007

Design: PKP	Drawn: PKP	Checked: MAC
Date: 02/2022	Wilson Project No.: 21007	

Revision	Date	Description	By

VERIFY SCALES
BAR IS ONE INCH ON ORIGINAL DRAWING
0 1"
IF NOT ONE INCH ON THIS SHEET, ADJUST SCALES ACCORDINGLY

Registered Professional Engineer
68430
PHANI KIRAN PEDDINTI
Date Signed 02-23-2022
ARIZONA U.S.A.

Sheet No. I–1.00

AGENCY REVIEW

XREFS: TB-WE-D; SEAL-PKP; SIGN-PKP

G:\PROJECT\21007\CADD\DESIGN\INSTRUMENTATION\21007 I–1.00.DWG, 2/23/2022 12:39:07 PM, PPeddinti, 1:1

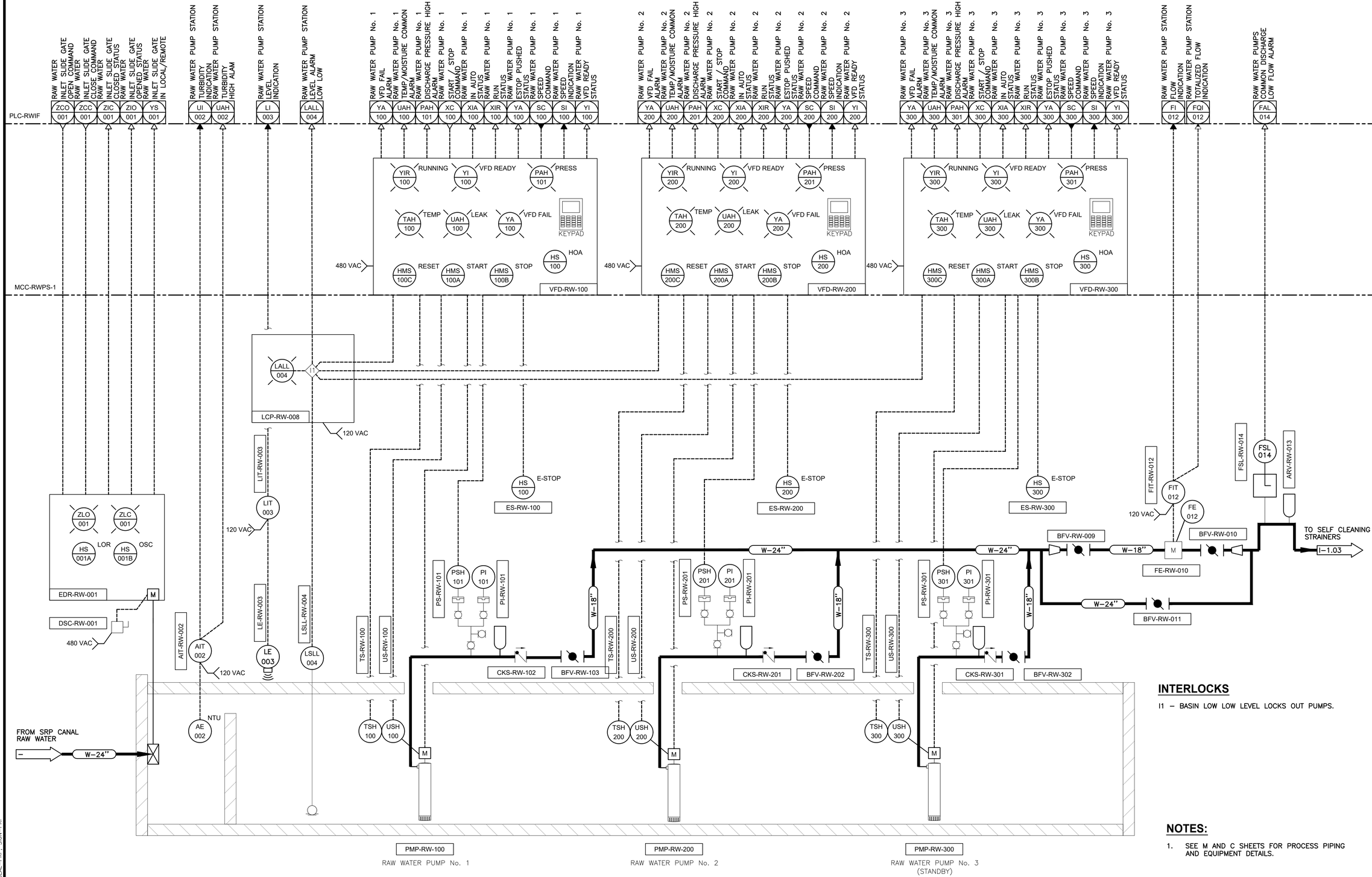

INTERLOCKS

I1 – BASIN LOW LOW LEVEL LOCKS OUT PUMPS.

NOTES:

1. SEE M AND C SHEETS FOR PROCESS PIPING AND EQUIPMENT DETAILS.

1620 West Fountainhead Pkwy
Suite 501
Tempe, Arizona 85282
Phone: (480) 893-8860
Improving Arizona's Infrastructure Since 1942

WILSON ENGINEERS

CITY OF CHANDLER
RECLAIMED WATER INTERCONNECT FACILITY

RAW WATER PUMP STATION
P&ID

CITY PROJECT NO. WW1901.203
WILSON PROJECT NO. 21007

Revision	Date	By

Design: ER
Date: 02/2022
Drawn: ER
Wilson Project No.: 21007
Checked: PKP

VERIFY SCALES
BAR IS ONE INCH ON ORIGINAL DRAWING
0 1"
IF NOT ONE INCH ON THIS SHEET, ADJUST SCALES ACCORDINGLY

68430 PHANI KIRAN PEDDINTI
REGISTERED PROFESSIONAL ENGINEER
ARIZONA U.S.A.

Sheet No. I–1.01

AGENCY REVIEW

XREFS: TB-WE-D; SEAL-PKP; SIGN-PKP

G:\PROJECT\21007\CADD\DESIGN\INSTRUMENTATION\21007 I-1.01.DWG, 2/23/2022 12:39:10 PM, PPeddinti, 1:1

PLC–RWIF

MCC–RWPS–1

RAW WATER GATE INTRUSION
YI 016

RAW WATER SES/MCC/MTS INTRUSION
YI 017

MCC–RWPS–1 REACTIVE POWER
JI 001A

MCC–RWPS–1 3 PHASE TOTAL IN KW
JI 001B

MCC–RWPS–1 REACTIVE POWER 3 PHASE TOTAL IN KVAR
JI 001C

MCC–RWPS–1 POWER FACTOR 3 PHASE TOTAL
JI 001D

MCC–RWPS–1 POWER FACTOR PHASE A
JI 001E

MCC–RWPS–1 POWER FACTOR PHASE B
JI 001F

MCC–RWPS–1 POWER FACTOR PHASE C
II 001A

MCC–RWPS–1 CURRENT PHASE A IN AMPS
II 001B

MCC–RWPS–1 CURRENT PHASE B IN AMPS
II 001C

MCC–RWPS–1 CURRENT PHASE C IN AMPS
JI 001G

MCC–RWPS–1 PEAK DEMAND REAL POWER IN KW
EI 001A

MCC–RWPS–1 VOLTAGE PHASE A TO B IN VOLTS
EI 001B

MCC–RWPS–1 VOLTAGE PHASE B TO C IN VOLTS
EI 001C

MCC–RWPS–1 VOLTAGE PHASE C TO A IN VOLTS
UI 001

MCC–RWPS–1 ENERGY 3 PHASE TOTAL IN KWH

SERIAL CABLE

POWER QUALITY METER
PQM–RWPS–1

MANUAL TRANSFER SWITCH MTS–RWPS MTS ON UTILITY
ZI 001

MANUAL TRANSFER SWITCH MTS–RWPS MTS ON STANDBY GENERATOR
ZI 001A

ETHERNET SWITCH

FOPP

TO/FROM ADMINISTRATION BLDG
ECOM–ADM–A
FOPP
I–1.00

TO/FROM RWIF ELECTRICAL BLDG
SMF PCP–001
ETHERNET SWITCH
I–1.04

ZS 016 — ZS-RW-016

ZS 017A — ZS-RW-017A

ZS 017B — ZS-RW-017B

ZS 017C — ZS-RW-017C

MANUAL TRANSFER SWITCH
MTS–RWPS–1

1620 West Fountainhead Pkwy
Suite 501
Tempe, Arizona 85282
Phone: (480) 893-8860

Improving Arizona's Infrastructure Since 1942

WILSON ENGINEERS

CITY OF CHANDLER
RECLAIMED WATER INTERCONNECT FACILITY

RAW WATER PUMP STATION
MISCELLANEOUS P&ID

CITY PROJECT NO. WW1901.203
WILSON PROJECT NO. 21007

Design: ER
Date: 02/2022
Drawn: ER
Wilson Project No.: 21007
Checked: PKP

Revision	Date	Description	By

VERIFY SCALES
BAR IS ONE INCH ON ORIGINAL DRAWING
0 1"
IF NOT ONE INCH ON THIS SHEET, ADJUST SCALES ACCORDINGLY

Professional Engineer Certificate
68430
PHANI KIRAN PEDDINTI
DATE SIGNED 02/23/2022
ARIZONA U.S.A.

Sheet No. **I–1.02**

XREFS: TB–WF–D; SEAL–PKP; SIGN–PKP

G:\PROJECT\21007\CADD\DESIGN\INSTRUMENTATION\21007 I–1.02.DWG, 2/23/2022 12:39:12 PM, PPeddinti, 1:1

AGENCY REVIEW

PLC-RWIF

MCC-RWIF

SELF-CLEANING STRAINER NO. 1 DIFFERENTIAL PRESSURE INDICATION — PDI 100
SELF-CLEANING STRAINER NO. 1 START PERMISSIVE COMMAND — XC 100A
SELF-CLEANING STRAINER NO. 1 START/STOP COMMAND — XC 100B
SELF-CLEANING STRAINER NO. 1 IN AUTO MODE — XS 100
SELF-CLEANING STRAINER NO. 1 RUNNING STATUS — YIR 100
SELF-CLEANING STRAINER NO. 1 FAIL ALARM — YA 100
BACKWASH ASSIST PUMP NO. 1 START/STOP COMMAND — XC 110
BACKWASH ASSIST PUMP NO. 1 IN AUTO MODE — XS 110
BACKWASH ASSIST PUMP NO. 1 RUNNING STATUS — YIR 110
BACKWASH ASSIST PUMP NO. 1 FAIL ALARM — YA 110
SELF-CLEANING STRAINER NO. 1 VALVE OPENED STATUS — ZIO 101
SELF-CLEANING STRAINER NO. 1 VALVE CLOSED STATUS — ZIC 101
SELF-CLEANING STRAINER NO. 1 VALVE IN REMOTE MODE — ZS 101
SELF-CLEANING STRAINER NO. 1 VALVE OPEN COMMAND — ZCO 101
SELF-CLEANING STRAINER NO. 1 VALVE CLOSE COMMAND — ZCC 101
SELF-CLEANING STRAINER NO. 2 DIFFERENTIAL PRESSURE INDICATION — PDI 200
SELF-CLEANING STRAINER NO. 2 START PERMISSIVE COMMAND — XC 200A
SELF-CLEANING STRAINER NO. 2 START/STOP COMMAND — XC 200B
SELF-CLEANING STRAINER NO. 2 IN AUTO MODE — XS 200
SELF-CLEANING STRAINER NO. 2 RUNNING STATUS — YIR 200
SELF-CLEANING STRAINER NO. 2 FAIL ALARM — YA 200
BACKWASH ASSIST PUMP NO. 2 START/STOP COMMAND — XC 210
BACKWASH ASSIST PUMP NO. 2 IN AUTO MODE — XS 210
BACKWASH ASSIST PUMP NO. 2 RUNNING STATUS — YIR 210
BACKWASH ASSIST PUMP NO. 2 FAIL ALARM — YA 210
SELF-CLEANING STRAINER NO. 2 VALVE OPENED STATUS — ZIO 201
SELF-CLEANING STRAINER NO. 2 VALVE CLOSED STATUS — ZIC 201
SELF-CLEANING STRAINER NO. 2 VALVE IN REMOTE MODE — ZS 201
SELF-CLEANING STRAINER NO. 2 VALVE OPEN COMMAND — ZCO 201
SELF-CLEANING STRAINER NO. 2 VALVE CLOSE COMMAND — ZCC 201
SELF-CLEANING STRAINER NO. 3 DIFFERENTIAL PRESSURE INDICATION — PDI 300
SELF-CLEANING STRAINER NO. 3 START PERMISSIVE COMMAND — XC 300A
SELF-CLEANING STRAINER NO. 3 START/STOP COMMAND — XC 300B
SELF-CLEANING STRAINER NO. 3 IN AUTO MODE — XS 300
SELF-CLEANING STRAINER NO. 3 RUNNING STATUS — YIR 300
SELF-CLEANING STRAINER NO. 3 FAIL ALARM — YA 300
BACKWASH ASSIST PUMP NO. 3 START/STOP COMMAND — XC 310
BACKWASH ASSIST PUMP NO. 3 IN AUTO MODE — XS 310
BACKWASH ASSIST PUMP NO. 3 RUNNING STATUS — YIR 310
BACKWASH ASSIST PUMP NO. 3 FAIL ALARM — YA 310
SELF-CLEANING STRAINER NO. 3 VALVE OPENED STATUS — ZIO 301
SELF-CLEANING STRAINER NO. 3 VALVE CLOSED STATUS — ZIC 301
SELF-CLEANING STRAINER NO. 3 VALVED0 IN REMOTE MODE — ZS 301
SELF-CLEANING STRAINER NO. 3 VALVE OPEN COMMAND — ZCO 301
SELF-CLEANING STRAINER NO. 3 VALVE CLOSE COMMAND — ZCC 301

STR-SD-100 (YL 100 RUN, YA 100A FAIL, KI 100 ETM, HMS 100A RESET)
STR-SD-200 (YL 200 RUN, YA 200A FAIL, KI 200 ETM, HMS 200A RESET)
STR-SD-300 (YL 300 RUN, YA 300A FAIL, KI 300 ETM, HMS 300A RESET)

LCP-SD-100 (HS 100 HOA, HS 100 ES, YA 100B FAIL, HMS 100B STOP, HMS 100C START)
VCP-SDBW-110 (YL 110 RUN, HS 110A HOA, HS 110B ES, TSH 110, HMS 110B STOP, HMS 110C START, YA 110 FAIL, KI 110 ETM, HMS 110A RST)
EDR-SD-101 (ZLO 101 OPN, HSA 101 LOR, ZLC 101 CLS, HSG 101 OSC)
LCP-SD-200 (HS 200 HOA, HS 200 ES, YA 200B FAIL, HMS 200B STOP, HMS 200C START)
VCP-SDBW-210 (YL 210 RUN, HS 210A HOA, HS 210B ES, TSH 210, HMS 210B STOP, HMS 210C START, YA 210 FAIL, KI 210 ETM, HMS 210A RST)
EDR-SD-201 (ZLO 201 OPN, HSA 201 LOR, ZLC 201 CLS, HSG 201 OSC)
LCP-SD-300 (HS 300 HOA, HS 300 ES, YA 300B FAIL, HMS 300B STOP, HMS 300C START)
VCP-SDBW-310 (YL 310 RUN, HS 310A HOA, HS 310B ES, TSH 310, HMS 310B STOP, HMS 310C START, YA 310 FAIL, KI 310 ETM, HMS 310A RST)
EDR-SD-301 (ZLO 301 OPN, HSA 301 LOR, ZLC 301 CLS, HSG 301 OSC)

DSC-SD-100, DSC-SD-200, DSC-SD-300

120 VAC
480VAC

FROM RAW WATER PUMP STATION — I-1.01

W-24" W-24" W-24" W-24" W-24"

DP-SD-100 — DP 100 — MTR-SD-100 — PS-SD-100A — PS 100A — PS 100B — PS-SD-100B
DP-SD-200 — DP 200 — MTR-SD-200 — PS-SD-200A — PS 200A — PS 200B — PS-SD-200B
DP-SD-300 — DP 300 — MTR-SD-300 — PS-SD-300A — PS 300A — PS 300B — PS-SD-300B

W-18" W-18" W-18"

PI 110 — TSH 110 — PMP-SDBW-110 — SD-100 — D-3" — PI 111
PI 210 — TSH 210 — PMP-SDBW-210 — SD-200 — D-3" — PI 211
PI 310 — TSH 310 — PMP-SDBW-310 — SD-300 — D-3" — PI 311

W-18" W-18" W-18" D-4"

FROM MFS BACKPULSE TANK DRAIN — I-1.12

TO MEMBRANE COMMON INLET CHANNEL

BAV-SD-101 — BAV-SD-201 — BAV-SD-301

D-6" D-6"

TO AWRF PLANT SEWER

FROM ACH METERING PUMP — I-2.07

CH-1/4"

XREFS: TB-WF-D; SEAL-PKP; SIGN-PKP

G:\PROJECT\21007\CADD\DESIGN\INSTRUMENTATION\21007 I-1.03.DWG, 2/23/2022 12:39:15 PM, PPeddinti, 1:1

AGENCY REVIEW

WILSON ENGINEERS
1620 West Fountainhead Pkwy
Suite 501
Tempe, Arizona 85282
Phone: (480) 893-8860
Improving Arizona's Infrastructure Since 1942

CITY OF CHANDLER
RECLAIMED WATER INTERCONNECT FACILITY

SELF CLEANING STRAINERS
P&ID

CITY PROJECT NO. WW1901.203
WILSON PROJECT NO. 21007

Revision	Date	Description	By

Design: ER
Date: 02/2022
Drawn: ER
Wilson Project No.: 21007
Checked: PKP

VERIFY SCALES
BAR IS ONE INCH ON ORIGINAL DRAWING
0 1"
IF NOT ONE INCH ON THIS SHEET, ADJUST SCALES ACCORDINGLY

Registered Professional Engineer
68430
PHANI KIRAN PEDDINTI
Date Signed 02/23/2022
ARIZONA U.S.A.

Sheet No. I-1.03

PLC-RWIF

V* SEE NOTE 2
PCP-001

MEMBRANE DISCHARGE CONTROL FLOW OPEN/CLOSE COMMAND — ZC 133
MEMBRANE INFLUENT CONTROL FLOW OPEN/CLOSE COMMAND — ZC 131
AIR SCOUR AIR CONTROL FLOW OPEN/CLOSE COMMAND — ZC 102
INLET CHANNEL HIGH LEVEL ALARM — LSH 001
AIR SUPPLY ASSEMBLY SOLENOID OPEN COMMAND — UCO 103
PERMEATE EFFLUENT FLOW INDICATION — FI 001
SMF TANK NO. 1 HIGH HIGH LEVEL ALARM — LAHH 106
SMF TANK NO. 1 HIGH LEVEL ALARM — LAH 106
SMF TANK NO. 1 LEVEL INDICATION — LI 106
SMF TANK NO. 1 LOW LEVEL ALARM — LAL 106
SMF TANK NO. 1 LOW LOW LEVEL ALARM — LALL 106
MEMBRANE BYPASS FLOW CONTROL VALVE OPEN/CLOSE COMMAND — ZC 132
SMF TANK NO. 1 PERMEATE PRESSURE INDICATION — PI 107
SMF TANK NO. 1 PERMEATE HIGH PRESSURE ALARM — PAH 107

PERMEATE FLOW SIGNAL TO PLANT PLC — I–1.08

120 VAC — LIT 106 — LIT-106
V* SEE NOTE 1

OIT
ETHERNET SW
FOPP
O
O4
FO
TO/FROM ADMIN BLDG ECOM–ADM–A FOPP
TO/FROM RWIF ELEC BLDG PLC–RWIF ETHERNET SWITCH — I–1.04

INSTRUMENT AIR — I–1.19 — IA-1"

AIR SUPPLY ASSEMBLY SEE MSS DRAWING 415261–AP–03
EJECTOR ASSEMBLY SEE MSS DRAWING 415261–AP–03
V* SEE NOTE 1
DRAIN OR MEMBRANE TANK

AIR SCOURS FROM BLOWERS — I–1.18 — A-12"
S, AI, FA — POP-102 — LSH-001 — LSH 001
V* SEE NOTE 1 — BFV-102

FROM SELF CLEANING STRAINERS — I–1.03 — W-24"

COMMON INFLUENT CHANNEL
TNK-100
A-4"
4 CASSETTES AND 1 SPARE PER TRAIN VENDOR SUPPLIED
LE-106
V* SEE NOTE 1

V* SEE NOTE 1 — W-20"
I, P, AI — IP-131 — BFV-131
I, P — IP-133 — BFV-133
W-24"
V* SEE NOTE 1

V* SEE NOTE 1 — MEMBRANE FILTRATION SYSTEM TRAIN No. 1

W-16"

PIT 107 — PIT-107 — NOTE 3
V* SEE NOTE 1
TO/FROM PERMEATE PUMPS/BACKPULSE SYSTEM — I–1.08

W-12"
S, AI, FC — POP-132
V* SEE NOTE 1 — BFV-132
TO/FROM CIP PUMPS — I–1.13

D-24"
TO PLANT SEWER

NOTES:

1. EQUIPMENT AND ITEMS DENOTED BY * TO BE PROVIDED BY THE MEMBRANE SYSTEM SUPPLIER (MSS) AND INSTALLED BY THE CONTRACTOR.
2. V* INDICATES VENDOR SUPPLIED, SEE DRAWINGS OF MSS EQUIPMENT P&IDs.
3. ISOLATION VALVES TO BE PROVIDED BY THE CONTRACTOR. MUST INCLUDE LOCKOUTS TO LOCK VALVES IN THE OPEN POSITION.
4. VENDOR PLC TO COMMUNICATE WITH NEW RECLAIMED WATER INTERCONNECT FACILITY PLC–RWIF THROUGH ETHERNET/IP. SIGNALS WILL BE COMMUNICATED TO CMS FROM THE PLC–RWIF OVER A FIBER OPTIC CONNECTION.

1620 West Fountainhead Pkwy
Suite 501
Tempe, Arizona 85282
Phone: (480) 893–8860
Improving Arizona's Infrastructure Since 1942

WILSON ENGINEERS

CITY OF CHANDLER
RECLAIMED WATER INTERCONNECT FACILITY

MEMBRANE FILTRATION SYSTEM TRAIN NO. 1 P&ID

CITY PROJECT NO. WW1901.203
WILSON PROJECT NO. 21007

Revision	Date	Description	By

Design: ER
Drawn: ER
Checked: PKP
Date: 02/2022
Wilson Project No.: 21007

VERIFY SCALES
BAR IS ONE INCH ON ORIGINAL DRAWING
0 — 1"
IF NOT ONE INCH ON THIS SHEET, ADJUST SCALES ACCORDINGLY

Registered Professional Engineer — 68430 — PHANI KIRAN PEDDINTI — DATE SIGNED 02-23-2022 — ARIZONA U.S.A.

Sheet No. I–1.04

XREFS: TB–WE–D; SEAL–PKP; SIGN–PKP

G:\PROJECT\21007\CADD\DESIGN\INSTRUMENTATION\21007 I–1.04.DWG, 2/23/2022 12:39:17 PM, PPeddinti, 1:1

AGENCY REVIEW

PLC-RWIF

V* SEE NOTE 2
PCP-001

MEMBRANE DISCHARGE CONTROL FLOW OPEN/CLOSE COMMAND	ZC 233		MEMBRANE INFLUENT CONTROL FLOW OPEN/CLOSE COMMAND	ZC 231		AIR SCOUR AIR CONTROL FLOW OPEN/CLOSE COMMAND	ZC 203		AIR SUPPLY ASSEMBLY SOLENOID OPEN COMMAND	UCO 203		SMF TANK NO. 2 HIGH HIGH LEVEL ALARM	LAHH 206	SMF TANK NO. 2 HIGH LEVEL ALARM	LAH 206	SMF TANK NO. 2 LEVEL INDICATION	LI 206	SMF TANK NO. 2 LOW LEVEL ALARM	LAL 206	SMF TANK NO. 2 LOW LOW LEVEL ALARM	LALL 206	MEMBRANE BYPASS FLOW CONTROL VALVE OPEN/CLOSE COMMAND	ZC 232	SMF TANK NO. 2 PERMEATE PRESSURE INDICATION	PI 207	SMF TANK NO. 2 PERMEATE HIGH PRESSURE ALARM	PAH 207

INSTRUMENT AIR
I–1.19

IA-1"

AIR SUPPLY ASSEMBLY SEE MSS DRAWING 415261–AP–03

EJECTOR ASSEMBLY SEE MSS DRAWING 415261–AP–03

V* SEE NOTE 1

DRAIN OR MEMBRANE TANK

V* SEE NOTE 1

120 VAC

LIT 206

LIT-206

V* SEE NOTE 1

AIR SCOUR FROM BLOWERS
I–1.18

A-12"

S

AI

FA

POP-202

V* SEE NOTE 1

BFV-202

COMMON INFLUENT CHANNEL

W-16"

4 CASSETTES AND 1 SPARE PER TRAIN
VENDOR SUPPLIED

A-4"

LE-206

V* SEE NOTE 1

PIT 207

PIT-207

NOTE 3

V* SEE NOTE 1

TO/FROM PERMEATE PUMPS/BACKPULSE SYSTEM
I–1.09

V* SEE NOTE 1

W-20"

TNK-200

I/P

AI

IP-231

BFV-231

W-24"

IP-233

BFV-233

V* SEE NOTE 1

V* SEE NOTE 1

MEMBRANE FILTRATION SYSTEM TRAIN No. 2

W-12"

S

AI

FC

POP-232

V* SEE NOTE 1

BFV-232

TO/FROM CIP PUMPS
I–1.13

D-24"

TO PLANT SEWER
–

NOTES:

1. EQUIPMENT AND ITEMS DENOTED BY * TO BE PROVIDED BY THE MEMBRANE SYSTEM SUPPLIER (MSS) AND INSTALLED BY THE CONTRACTOR.
2. V* INDICATES VENDOR SUPPLIED, SEE DRAWINGS OF MSS EQUIPMENT P&IDs.
3. ISOLATION VALVES TO BE PROVIDED BY THE CONTRACTOR. MUST INCLUDE LOCKOUTS TO LOCK VALVES IN THE OPEN POSITION.
4. VENDOR PLC TO COMMUNICATE WITH NEW RECLAIMED WATER INTERCONNECT FACILITY PLC–RWIF THROUGH ETHERNET/IP. SIGNALS WILL BE COMMUNICATED TO CMS FROM THE PLC–RWIF OVER A FIBER OPTIC CONNECTION.

1620 West Fountainhead Pkwy
Suite 501
Tempe, Arizona 85282
Phone: (480) 893–8860

Improving Arizona's Infrastructure Since 1942

WILSON ENGINEERS

CITY OF CHANDLER
RECLAIMED WATER INTERCONNECT FACILITY

MEMBRANE FILTRATION SYSTEM TRAIN NO. 2 P&ID

CITY PROJECT NO. WW1901.203
WILSON PROJECT NO. 21007

By	Description	Date	Revision

Checked: PKP
Drawn: ER
Wilson Project No.: 21007
Design: ER
Date: 02/2022

VERIFY SCALES
BAR IS ONE INCH ON ORIGINAL DRAWING
0 1"
IF NOT ONE INCH ON THIS SHEET, ADJUST SCALES ACCORDINGLY

Registered Professional Engineer
68430
PHANI KIRAN PEDDINTI
DATE SIGNED 02-23-2022
ARIZONA U.S.A.

Sheet No. I–1.05

AGENCY REVIEW

XREFS: TB-WE-D; SEAL-PKP; SIGN-PKP

G:\PROJECT\21007\CADD\DESIGN\INSTRUMENTATION\21007 I–1.05.DWG, 2/23/2022 12:39:20 PM, PPeddinti, 1:1

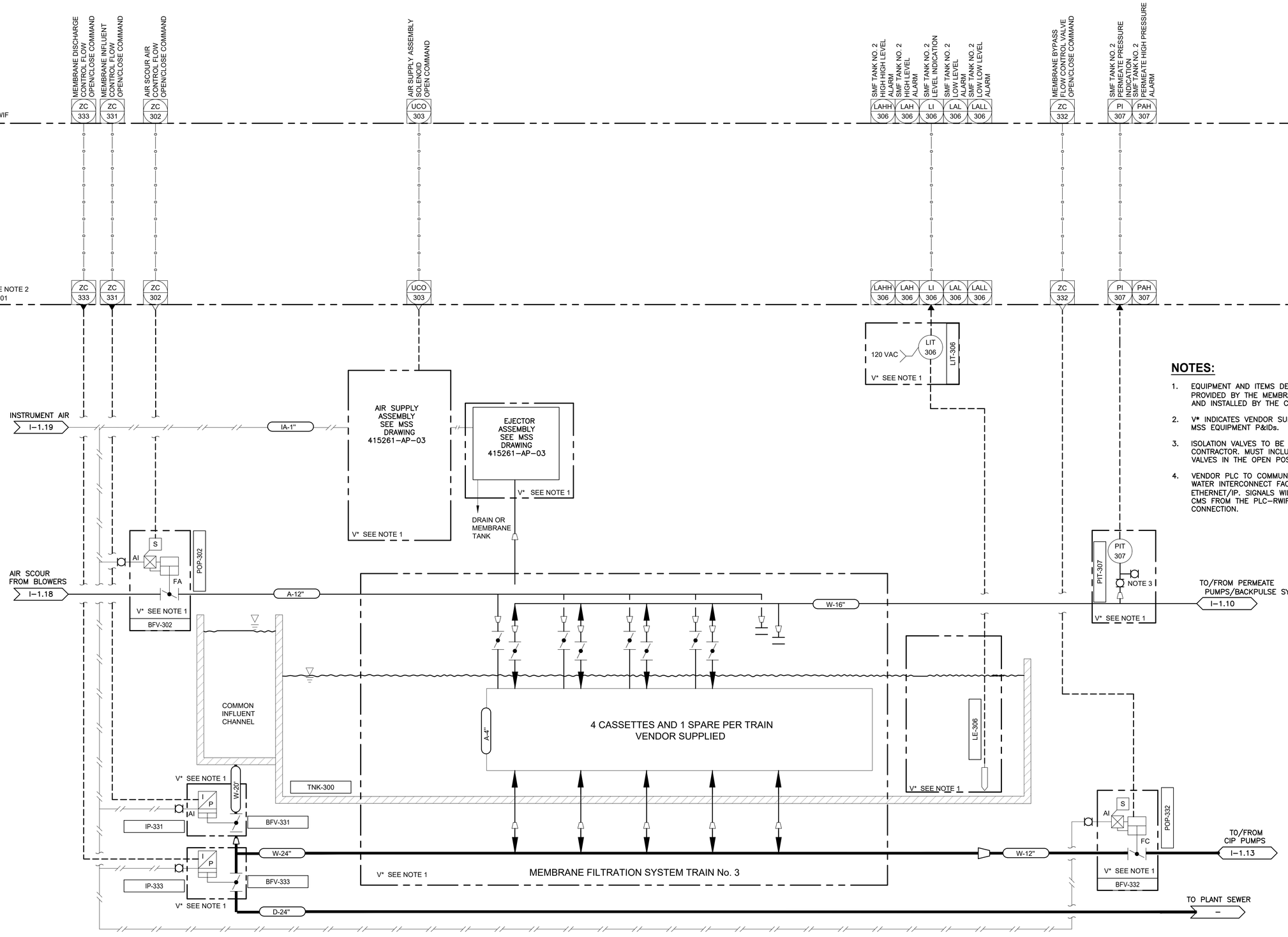

NOTES:

1. EQUIPMENT AND ITEMS DENOTED BY * TO BE PROVIDED BY THE MEMBRANE SYSTEM SUPPLIER (MSS) AND INSTALLED BY THE CONTRACTOR.
2. V* INDICATES VENDOR SUPPLIED, SEE DRAWINGS OF MSS EQUIPMENT P&IDs.
3. ISOLATION VALVES TO BE PROVIDED BY THE CONTRACTOR. MUST INCLUDE LOCKOUTS TO LOCK VALVES IN THE OPEN POSITION.
4. VENDOR PLC TO COMMUNICATE WITH NEW RECLAIMED WATER INTERCONNECT FACILITY PLC-RWIF THROUGH ETHERNET/IP. SIGNALS WILL BE COMMUNICATED TO CMS FROM THE PLC-RWIF OVER A FIBER OPTIC CONNECTION.

1620 West Fountainhead Pkwy
Suite 501
Tempe, Arizona 85282
Phone: (480) 893-8860
Improving Arizona's Infrastructure Since 1942

WILSON ENGINEERS

CITY OF CHANDLER
RECLAIMED WATER INTERCONNECT FACILITY

MEMBRANE FILTRATION SYSTEM TRAIN NO. 3 P&ID

CITY PROJECT NO. WW1901.203
WILSON PROJECT NO. 21007

Revision	Date	Description	By

Design: ER
Date: 02/2022
Drawn: ER
Wilson Project No.: 21007
Checked: PKP

VERIFY SCALES
BAR IS ONE INCH ON ORIGINAL DRAWING
0 1"
IF NOT ONE INCH ON THIS SHEET, ADJUST SCALES ACCORDINGLY

Registered Professional Engineer
68430
PHANI KIRAN PEDDINTI
DATE SIGNED 02-23-2022
ARIZONA U.S.A.

Sheet No. I-1.06

AGENCY REVIEW

XREFS: TB-WE-D; SEAL-PKP; SIGN-PKP

G:\PROJECT\21007\CADD\DESIGN\INSTRUMENTATION\21007 I-1.06.DWG, 2/23/2022 12:39:23 PM, PPeddinti, 1:1

PLC-RWIF

V* SEE NOTE 2
PCP-001

MEMBRANE DISCHARGE CONTROL FLOW OPEN/CLOSE COMMAND	ZC 433	MEMBRANE INFLUENT CONTROL FLOW OPEN/CLOSE COMMAND	ZC 431	AIR SCOUR AIR CONTROL FLOW OPEN/CLOSE COMMAND	ZC 402	AIR SUPPLY ASSEMBLY SOLENOID OPEN COMMAND	UCO 403	SMF TANK NO. 2 HIGH HIGH LEVEL ALARM	LAHH 406	SMF TANK NO. 2 HIGH LEVEL ALARM	LAH 406	SMF TANK NO. 2 LEVEL INDICATION	LI 406	SMF TANK NO. 2 LOW LEVEL ALARM	LAL 406	SMF TANK NO. 2 LOW LOW LEVEL ALARM	LALL 406	MEMBRANE BYPASS FLOW CONTROL VALVE OPEN/CLOSE COMMAND	ZC 432	SMF TANK NO. 2 PERMEATE PRESSURE INDICATION	PI 407	SMF TANK NO. 2 PERMEATE HIGH PRESSURE ALARM	PAH 407

INSTRUMENT AIR
I–1.19

IA-1"

AIR SUPPLY ASSEMBLY SEE MSS DRAWING 415261–AP–03

V* SEE NOTE 1

EJECTOR ASSEMBLY SEE MSS DRAWING 415261–AP–03

V* SEE NOTE 1

DRAIN OR MEMBRANE TANK

120 VAC

LIT 406

LIT-406

V* SEE NOTE 1

AIR SCOUR FROM BLOWERS
I–1.18

A-12"

S

AI

FA

POP-402

V* SEE NOTE 1

BFV-402

COMMON INFLUENT CHANNEL

TNK-300

W-16"

PIT 407

PIT-407

NOTE 3

V* SEE NOTE 1

TO/FROM PERMEATE PUMPS/BACKPULSE SYSTEM
I–1.11

A-4"

4 CASSETTES AND 1 SPARE PER TRAIN
VENDOR SUPPLIED

LE-406

V* SEE NOTE 1

V* SEE NOTE 1

W-20"

I/P

AI

IP-431

BFV-431

W-24"

I/P

IP-433

BFV-433

V* SEE NOTE 1

D-24"

V* SEE NOTE 1

MEMBRANE FILTRATION SYSTEM TRAIN No. 4

W-12"

S

AI

FC

POP-432

V* SEE NOTE 1

BFV-432

TO/FROM CIP PUMPS
I–1.13

TO PLANT SEWER
–

NOTES:

1. EQUIPMENT AND ITEMS DENOTED BY * TO BE PROVIDED BY THE MEMBRANE SYSTEM SUPPLIER (MSS) AND INSTALLED BY THE CONTRACTOR.
2. V* INDICATES VENDOR SUPPLIED, SEE DRAWINGS OF MSS EQUIPMENT P&IDs.
3. ISOLATION VALVES TO BE PROVIDED BY THE CONTRACTOR. MUST INCLUDE LOCKOUTS TO LOCK VALVES IN THE OPEN POSITION.
4. VENDOR PLC TO COMMUNICATE WITH NEW RECLAIMED WATER INTERCONNECT FACILITY PLC–RWIF THROUGH ETHERNET/IP. SIGNALS WILL BE COMMUNICATED TO CMS FROM THE PLC–RWIF OVER A FIBER OPTIC CONNECTION.

1620 West Fountainhead Pkwy
Suite 501
Tempe, Arizona 85282
Phone: (480) 893-8860

Improving Arizona's Infrastructure Since 1942

WILSON ENGINEERS

CITY OF CHANDLER
RECLAIMED WATER INTERCONNECT FACILITY

MEMBRANE FILTRATION SYSTEM TRAIN NO. 4 P&ID

CITY PROJECT NO. WW1901.203
WILSON PROJECT NO. 21007

Revision	Date	Description	By

Design: ER
Date: 02/2022
Drawn: ER
Wilson Project No.: 21007
Checked: PKP

VERIFY SCALES
BAR IS ONE INCH ON ORIGINAL DRAWING
0 1"
IF NOT ONE INCH ON THIS SHEET, ADJUST SCALES ACCORDINGLY

Registered Professional Engineer
68430
PHANI KIRAN PEDDINTI
DATE SIGNED 02-23-2022
ARIZONA U.S.A.

Sheet No. I–1.07

XREFS: TB-WE-D; SEAL-PKP; SIGN-PKP

G:\PROJECT\21007\CADD\DESIGN\INSTRUMENTATION\21007 I–1.07.DWG, 2/23/2022 12:39:26 PM, PPeddinti, 1:1

AGENCY REVIEW

PERMEATE BACKPULSE MEMBRANE HIGH PRESSURE ALARM — PAH 107
PERMEATE BACKPULSE FLOW CONTROL VALVE OPEN/CLOSE COMMAND — ZC 109
PERMEATE PUMP No. 1 FLOW CONTROL VALVE OPEN/CLOSE COMMAND — ZC 110
BACKPULSE WATER FLOW CONTROL VALVE OPENED STATUS — ZIO 519
BACKPULSE WATER FLOW CONTROL VALVE OPEN/CLOSE COMMAND — ZC 519
BACKPULSE WATER FLOW CONTROL VALVE CLOSED STATUS — ZIC 519
PERMEATE PUMP No. 1 SPEED INDICATION — SI 100
PERMEATE PUMP No. 1 SPEED COMMAND — SC 100
PERMEATE PUMP No. 1 START/STOP COMMAND — XC 100
PERMEATE PUMP No. 1 RESET COMMAND — XC 100A
PERMEATE PUMP No. 1 COMMON FAIL ALARM — YA 100
PERMEATE PUMP No. 1 RUNNING STATUS — XIR 100
PERMEATE PUMP No. 1 IN AUTO MODE — XS 100
PERMEATE PUMP No. 1 HIGH FLOW ALARM — FAH 120
PERMEATE PUMP No. 1 FLOW INDICATION — FI 120
PERMEATE PUMP No. 1 LOW FLOW ALARM — FAL 120
PERMEATE PUMP No. 1 DISCHARGE FLOW CONTROL VLV OPEN/CLOSE COMMAND — ZC 121

PLC-RWIF

V*
PCP-001

MCC-RWIF

VFD-PP-100
TEMP TAH 100
VFD FAIL YA 100
PRESS PAH 112
RUNNING YR 100
DSC YL 100
KEYPAD
480 VAC
POT SC 100
SPEED SI 100
RESET HMS 100A
START HMS 100B
STOP HMS 100C
HOA HS 100
YS 100
DSC-PP-100

INSTRUMENT AIR FROM COMPRESSOR I–1.19

PSH 107
PSH-107
AI
S
FC
POP-109
BFV-109
PERMEATE/BACKPULSE FROM/TO MEMBRANES I–1.04
W–14"
BFV-110
POP-110
PI 111
PI-111
TSH 100
TSH-100
PSH 112
PI 112
PI-112
FIT 120
FIT-120
120 VAC
W–14"
W–12"
PMP-PP-100
PERMEATE PROCESS PUMP No. 1
W–10"
W–12"
CKV-123
FE 120
FE-120
M
S
AI
FC
POP-121
BFV-121
V* SEE NOTE 1
TO CIP TANK/BACKPULSE TANK/CCB I–1.12

ZSO 519
ZSC 519
S
AI
FC
BFV-519
POP-519
BACKPULSE WATER FROM BACKPULSE TANK I–1.12
W–16"
V* SEE NOTE 1
W–1/4"
TO PERMEATE TURBIDITY ANALYZER PANEL I–1.16

NOTES:

1. EQUIPMENT AND ITEMS DENOTED BY * TO BE PROVIDED BY THE MEMBRANE SYSTEM SUPPLIER (MSS) AND INSTALLED BY THE CONTRACTOR.
2. ISOLATION VALVES MUST INCLUDE LOCKOUTS TO LOCK VALVES IN THE OPEN POSITION.
3. V* VENDOR SUPPLIED.
4. VENDOR PLC TO COMMUNICATE WITH NEW RECLAIMED WATER INTERCONNECT FACILITY PLC–RWIF THROUGH ETHERNET/IP. SIGNALS WILL BE COMMUNICATED TO CMS FROM THE PLC–RWIF OVER A FIBER OPTIC CONNECTION.

1620 West Fountainhead Pkwy
Suite 501
Tempe, Arizona 85282
Phone: (480) 893-8860
Improving Arizona's Infrastructure Since 1942

WILSON ENGINEERS

CITY OF CHANDLER
RECLAIMED WATER INTERCONNECT FACILITY

MEMBRANE FILTRATION SYSTEM
PERMEATE PUMP NO. 1 P&ID

CITY PROJECT NO. WW1901.203
WILSON PROJECT NO. 21007

Revision	Date	Description	By

Design: ER
Date: 02/2022
Drawn: ER
Wilson Project No.: 21007
Checked: PKP

VERIFY SCALES
BAR IS ONE INCH ON ORIGINAL DRAWING
0 1"
IF NOT ONE INCH ON THIS SHEET, ADJUST SCALES ACCORDINGLY



Sheet No. I–1.08

XREFS: TB-WE-D; SEAL-PKP; SIGN-PKP

G:\PROJECT\21007\CADD\DESIGN\INSTRUMENTATION\21007 I–1.08.DWG, 2/23/2022 12:39:29 PM, PPeddinti, 1:1

AGENCY REVIEW

PERMEATE BACKPULSE MEMBRANE HIGH PRESSURE ALARM — PAH 207
PERMEATE BACKPULSE FLOW CONTROL VALVE OPEN/CLOSE COMMAND — ZC 209
PERMEATE PUMP No. 2 FLOW CONTROL VALVE OPEN/CLOSE COMMAND — ZC 210
BACKPULSE WATER FLOW CONTROL VALVE OPEN/CLOSE COMMAND — ZC 520
PERMEATE PUMP No. 2 SPEED INDICATION — SI 200
PERMEATE PUMP No. 2 SPEED COMMAND — SC 200
PERMEATE PUMP No. 2 START/STOP COMMAND — XC 200
PERMEATE PUMP No. 2 RESET COMMAND — XC 200A
PERMEATE PUMP No. 2 COMMON FAIL ALARM — YA 200
PERMEATE PUMP No. 2 RUNNING STATUS — XIR 200
PERMEATE PUMP No. 2 IN AUTO MODE — XS 200
PERMEATE PUMP No. 2 HIGH FLOW ALARM — FAH 220
PERMEATE PUMP No. 2 FLOW INDICATION — FI 220
PERMEATE PUMP No. 2 LOW FLOW ALARM — FAL 220
PERMEATE PUMP No. 2 DISCHARGE FLOW CONTROL VLV OPEN/CLOSE COMMAND — ZC 221

PLC-RWIF

V*
PCP-001

MCC-RWIF

VFD-PP-200: TEMP TAH 200; VFD FAIL YA 200; PRESS PAH 212; RUNNING YR 200; DSC YL 200; KEYPAD; 480 VAC; POT SC 200; SPEED SI 200; RESET HMS 200A; START HMS 200B; STOP HMS 200C; HOA HS 200

YS 200 — DSC-PP-200

INSTRUMENT AIR FROM COMPRESSOR I-1.19

PERMEATE/BACKPULSE FROM/TO MEMBRANES I-1.05

BACKPULSE WATER FROM BACKPULSE TANK I-1.12

PSH 207 — PSH-207 — AI — S — FC — POP-209 — BFV-209 — POP-210 — BFV-210 — PI 211 — PI-211

TSH 200 — TSH-200 — M — PMP-PP-200 — PERMEATE PROCESS PUMP No. 2

PSH 212 — PSH-212 — PI 212 — PI-212

FIT 220 — FIT-220 — 120 VAC

CKV-223

FE 220 — M — FE-220

AI — S — FC — POP-221 — BFV-221 — V* SEE NOTE 1

TO CIP TANK/BACKPULSE TANK/CCB I-1.12

TO PERMEATE TURBIDITY ANALYZER PANEL I-1.16

BFV-520 — AI — S — FC — POP-520

W-14" · W-16" · W-12" · W-10" · W-1/4"

V* SEE NOTE 1

NOTES:

1. EQUIPMENT AND ITEMS DENOTED BY * TO BE PROVIDED BY THE MEMBRANE SYSTEM SUPPLIER (MSS) AND INSTALLED BY THE CONTRACTOR.
2. ISOLATION VALVES MUST INCLUDE LOCKOUTS TO LOCK VALVES IN THE OPEN POSITION.
3. V* VENDOR SUPPLIED.
4. VENDOR PLC TO COMMUNICATE WITH NEW RECLAIMED WATER INTERCONNECT FACILITY PLC-RWIF THROUGH ETHERNET/IP. SIGNALS WILL BE COMMUNICATED TO CMS FROM THE PLC-RWIF OVER A FIBER OPTIC CONNECTION.

1620 West Fountainhead Pkwy
Suite 501
Tempe, Arizona 85282
Phone: (480) 893-8860
Improving Arizona's Infrastructure Since 1942

WILSON ENGINEERS

CITY OF CHANDLER
RECLAIMED WATER INTERCONNECT FACILITY

MEMBRANE FILTRATION SYSTEM
PERMEATE PUMP NO. 2 P& ID
CITY PROJECT NO. WW1901.203
WILSON PROJECT NO. 21007

Design: ER	Drawn: ER	Checked: PKP
Date: 02/2022	Wilson Project No.: 21007	

Revision	Date	Description	By

VERIFY SCALES
BAR IS ONE INCH ON ORIGINAL DRAWING
0 — 1"
IF NOT ONE INCH ON THIS SHEET, ADJUST SCALES ACCORDINGLY

Professional Engineer — 68430 PHANI KIRAN PEDDINTI — DATE SIGNED 02-23-2022 — ARIZONA U.S.A.

Sheet No. **I-1.09**

XREFS: TB-WE-D; SEAL-PKP; SIGN-PKP

G:\PROJECT\21007\CADD\DESIGN\INSTRUMENTATION\21007 I-1.09.DWG, 2/23/2022 12:39:31 PM, PPeddinti, 1:1

AGENCY REVIEW

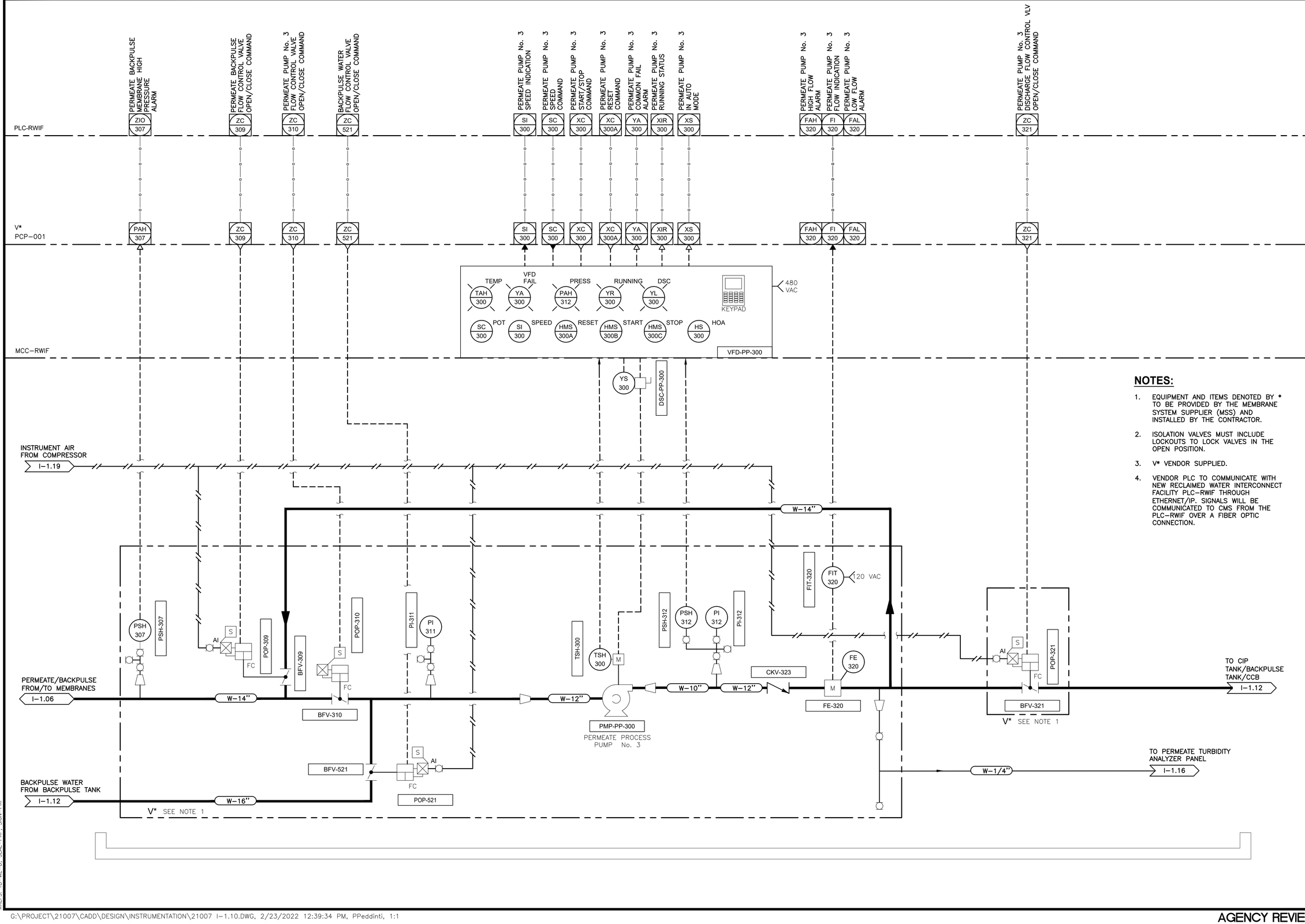

NOTES:

1. EQUIPMENT AND ITEMS DENOTED BY * TO BE PROVIDED BY THE MEMBRANE SYSTEM SUPPLIER (MSS) AND INSTALLED BY THE CONTRACTOR.
2. ISOLATION VALVES MUST INCLUDE LOCKOUTS TO LOCK VALVES IN THE OPEN POSITION.
3. V* VENDOR SUPPLIED.
4. VENDOR PLC TO COMMUNICATE WITH NEW RECLAIMED WATER INTERCONNECT FACILITY PLC-RWIF THROUGH ETHERNET/IP. SIGNALS WILL BE COMMUNICATED TO CMS FROM THE PLC-RWIF OVER A FIBER OPTIC CONNECTION.

1620 West Fountainhead Pkwy
Suite 501
Tempe, Arizona 85282
Phone: (480) 893-8860
Improving Arizona's Infrastructure Since 1942
WILSON ENGINEERS

CITY OF CHANDLER
RECLAIMED WATER INTERCONNECT FACILITY

MEMBRANE FILTRATION SYSTEM
PERMEATE PUMP NO.3 P&ID

CITY PROJECT NO. WW1901.203
WILSON PROJECT NO. 21007

Revision	Date	Description	By

Design: ER
Date: 02/2022
Drawn: ER
Wilson Project No.: 21007
Checked: PKP

VERIFY SCALES
BAR IS ONE INCH ON ORIGINAL DRAWING
0 1"
IF NOT ONE INCH ON THIS SHEET, ADJUST SCALES ACCORDINGLY



Sheet No. I-1.10

XREFS: TB-WE-D; SEAL-PKP; SIGN-PKP

G:\PROJECT\21007\CADD\DESIGN\INSTRUMENTATION\21007 I-1.10.DWG, 2/23/2022 12:39:34 PM, PPeddinti, 1:1

AGENCY REVIEW

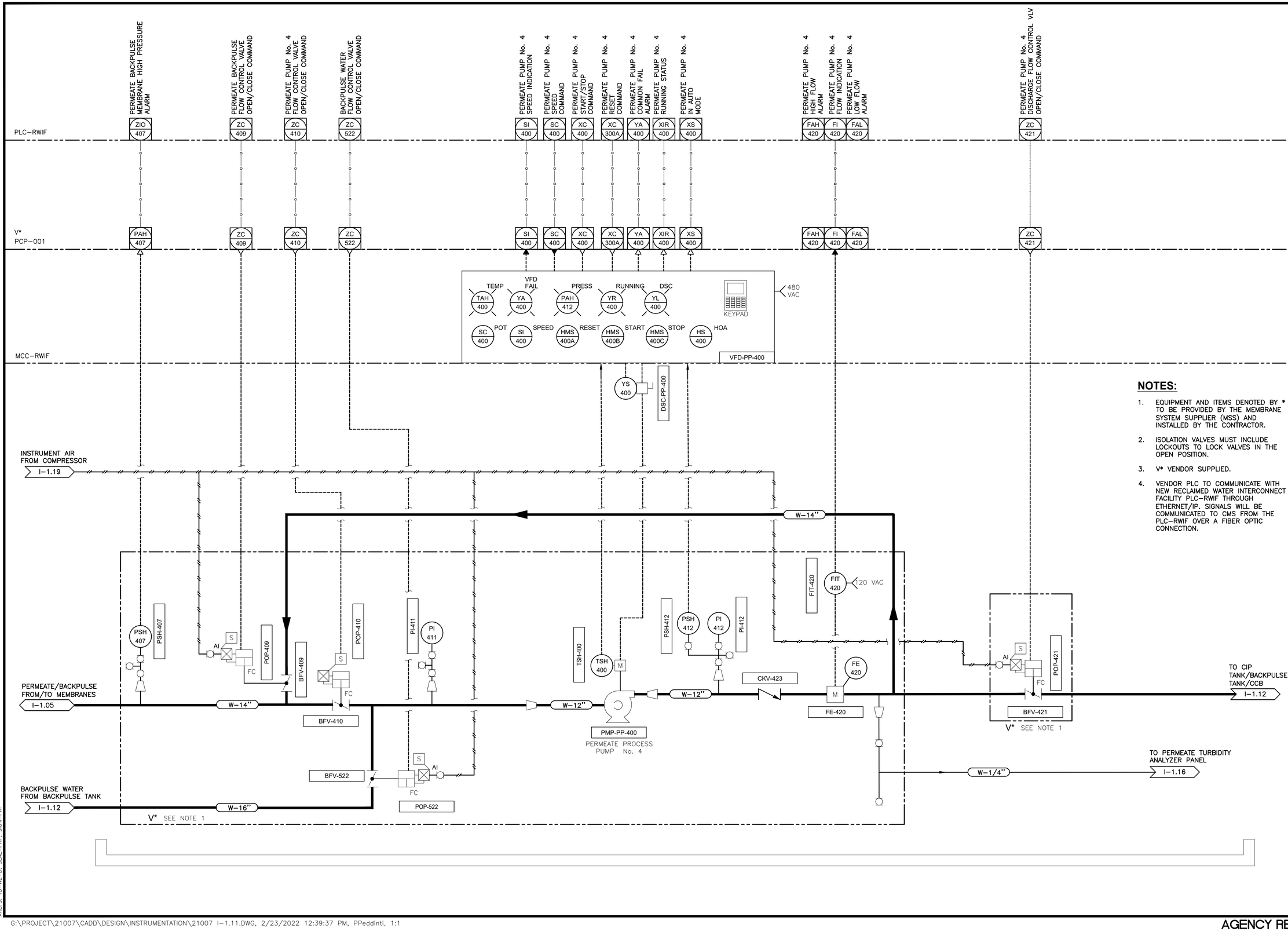

NOTES:

1. EQUIPMENT AND ITEMS DENOTED BY * TO BE PROVIDED BY THE MEMBRANE SYSTEM SUPPLIER (MSS) AND INSTALLED BY THE CONTRACTOR.
2. ISOLATION VALVES MUST INCLUDE LOCKOUTS TO LOCK VALVES IN THE OPEN POSITION.
3. V* VENDOR SUPPLIED.
4. VENDOR PLC TO COMMUNICATE WITH NEW RECLAIMED WATER INTERCONNECT FACILITY PLC–RWIF THROUGH ETHERNET/IP. SIGNALS WILL BE COMMUNICATED TO CMS FROM THE PLC–RWIF OVER A FIBER OPTIC CONNECTION.

1620 West Fountainhead Pkwy
Suite 501
Tempe, Arizona 85282
Phone: (480) 893-8860
Improving Arizona's Infrastructure Since 1942
WILSON ENGINEERS

CITY OF CHANDLER
RECLAIMED WATER INTERCONNECT FACILITY

MEMBRANE FILTRATION SYSTEM
PERMEATE PUMP NO.4 P&ID

CITY PROJECT NO. WW1901.203
WILSON PROJECT NO. 21007

Revision	Date	Description	By

Design: ER
Date: 02/2022
Drawn: ER
Wilson Project No.: 21007
Checked: PKP

VERIFY SCALES
BAR IS ONE INCH ON ORIGINAL DRAWING
0 1"
IF NOT ONE INCH ON THIS SHEET, ADJUST SCALES ACCORDINGLY



Sheet No. I–1.11

AGENCY REVIEW

XREFS: TB-WE-D; SEAL-PKP; SIGN-PKP

G:\PROJECT\21007\CADD\DESIGN\INSTRUMENTATION\21007 I–1.11.DWG, 2/23/2022 12:39:37 PM, PPeddinti, 1:1

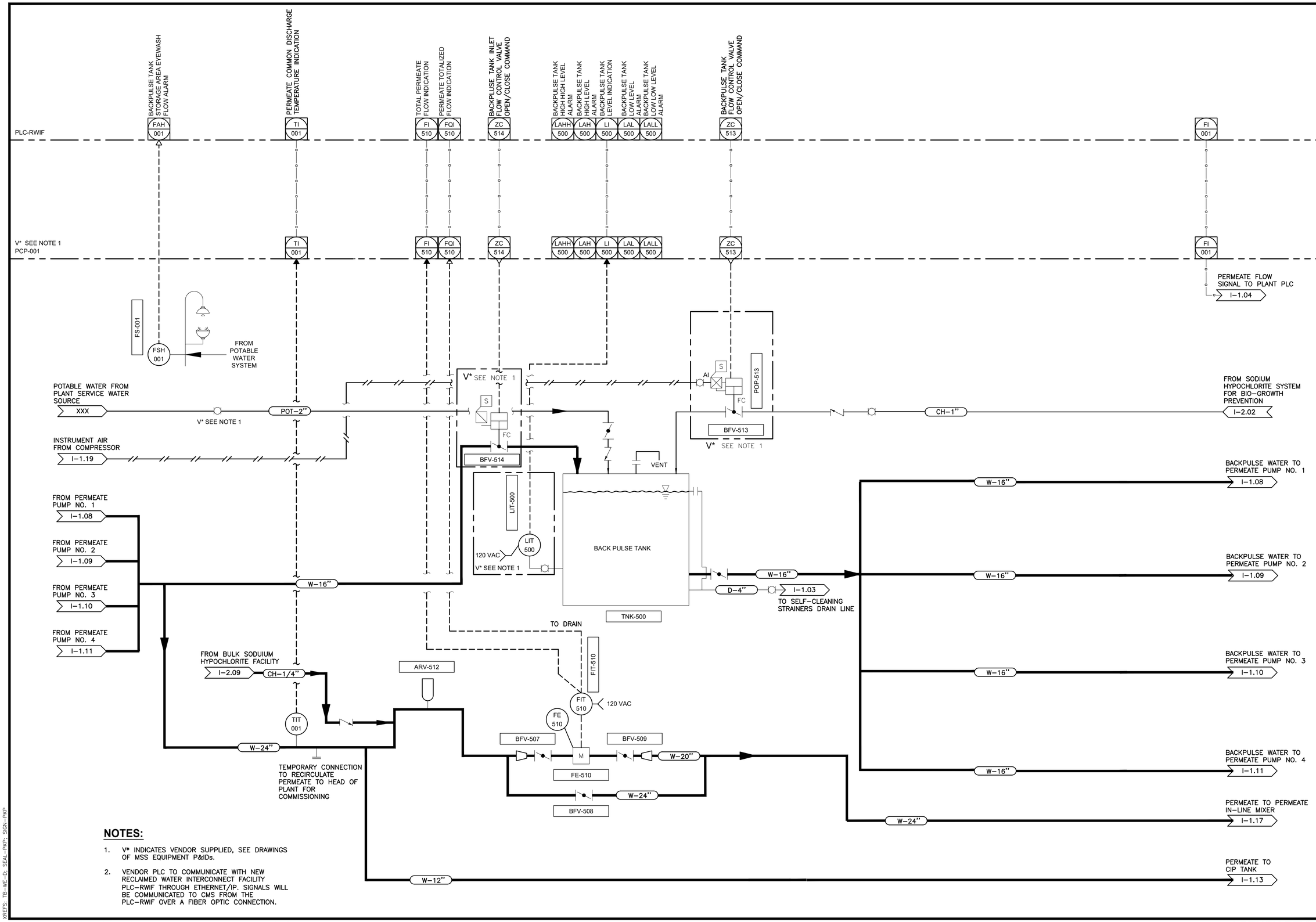

NOTES:

1. V* INDICATES VENDOR SUPPLIED, SEE DRAWINGS OF MSS EQUIPMENT P&IDs.
2. VENDOR PLC TO COMMUNICATE WITH NEW RECLAIMED WATER INTERCONNECT FACILITY PLC-RWIF THROUGH ETHERNET/IP. SIGNALS WILL BE COMMUNICATED TO CMS FROM THE PLC-RWIF OVER A FIBER OPTIC CONNECTION.

1620 West Fountainhead Pkwy
Suite 501
Tempe, Arizona 85282
Phone: (480) 893-8860
Improving Arizona's Infrastructure Since 1942

WILSON ENGINEERS

CITY OF CHANDLER
RECLAIMED WATER INTERCONNECT FACILITY

MEMBRANE FILTRATION SYSTEM
BACKPULSE TANK P&ID

CITY PROJECT NO. WW1901.203
WILSON PROJECT NO. 21007

Design: ER	Drawn: ER	Checked: PKP
Date: 02/2022	Wilson Project No.: 21007	

Revision	Date	Description	By

VERIFY SCALES
BAR IS ONE INCH ON ORIGINAL DRAWING
0 1"
IF NOT ONE INCH ON THIS SHEET, ADJUST SCALES ACCORDINGLY

Professional Engineer
PHANI KIRAN PEDDINTI
68430
DATE SIGNED 02-23-2022
ARIZONA U.S.A.

Sheet No. **I-1.12**

AGENCY REVIEW

XREFS: TB-WE-D; SEAL-PKP; SIGN-PKP

G:\PROJECT\21007\CADD\DESIGN\INSTRUMENTATION\21007 I-1.12.DWG, 2/23/2022 12:39:39 PM, PPeddinti, 1:1

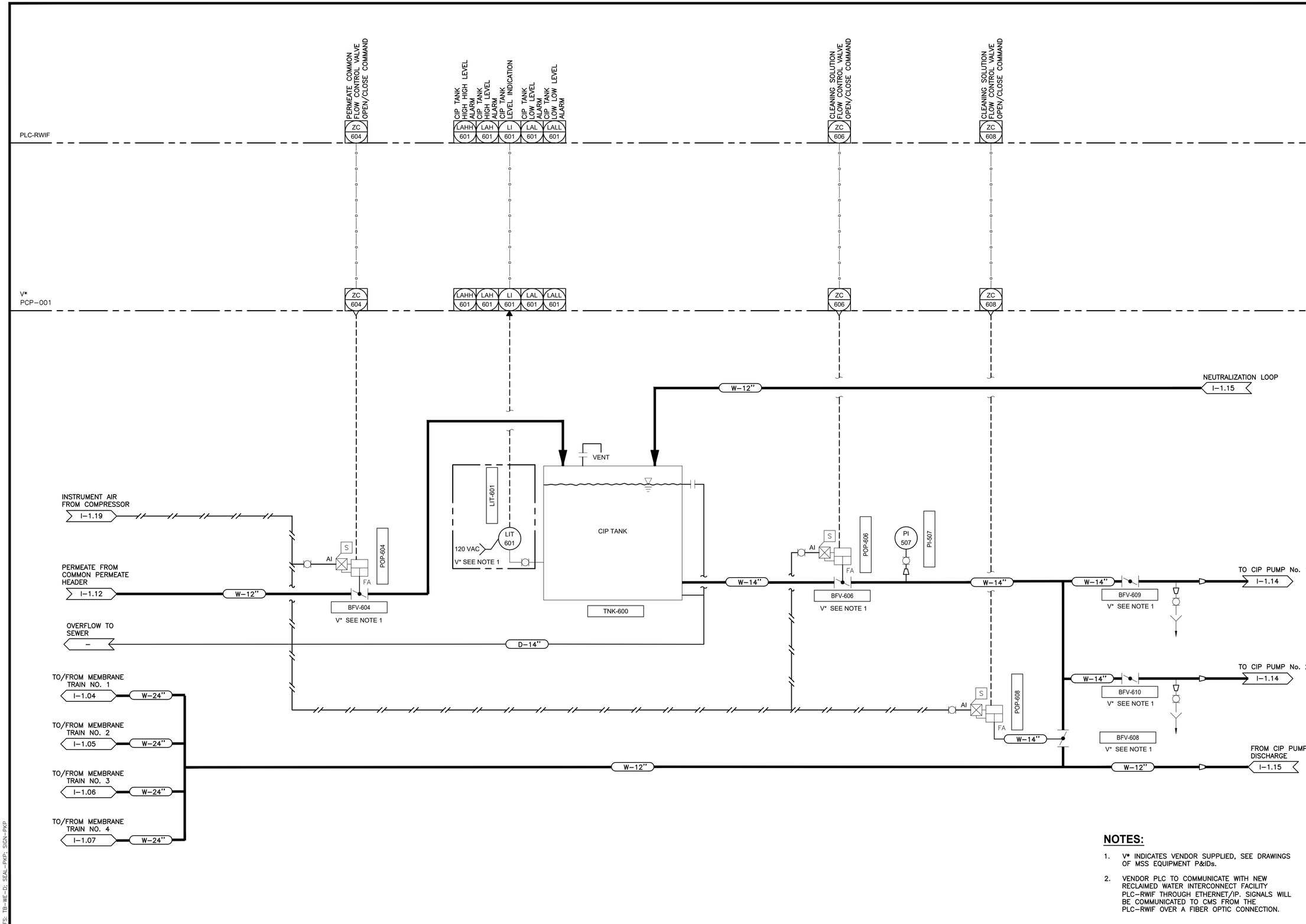

NOTES:

1. V* INDICATES VENDOR SUPPLIED, SEE DRAWINGS OF MSS EQUIPMENT P&IDs.
2. VENDOR PLC TO COMMUNICATE WITH NEW RECLAIMED WATER INTERCONNECT FACILITY PLC-RWIF THROUGH ETHERNET/IP. SIGNALS WILL BE COMMUNICATED TO CMS FROM THE PLC-RWIF OVER A FIBER OPTIC CONNECTION.

1620 West Fountainhead Pkwy
Suite 501
Tempe, Arizona 85282
Phone: (480) 893-8860

Improving Arizona's Infrastructure Since 1942

WILSON ENGINEERS

CITY OF CHANDLER
RECLAIMED WATER INTERCONNECT FACILITY

MEMBRANE FILTRATION SYSTEM
CIP TANK P&ID

CITY PROJECT NO. WW1901.203
WILSON PROJECT NO. 21007

Design: ER	Drawn: ER	Checked: PKP
Date: 02/2022	Wilson Project No.: 21007	

Revision	Date	Description	By

VERIFY SCALES
BAR IS ONE INCH ON ORIGINAL DRAWING
0 1"
IF NOT ONE INCH ON THIS SHEET, ADJUST SCALES ACCORDINGLY

Registered Professional Engineer
68430
PHANI KIRAN PEDDINTI
DATE SIGNED 02-23-2022
ARIZONA U.S.A.

Sheet No. I-1.13

AGENCY REVIEW

XREFS: TB-WE-D; SEAL-PKP; SIGN-PKP

G:\PROJECT\21007\CADD\DESIGN\INSTRUMENTATION\21007 I-1.13.DWG, 2/23/2022 12:39:42 PM, PPeddinti, 1:1

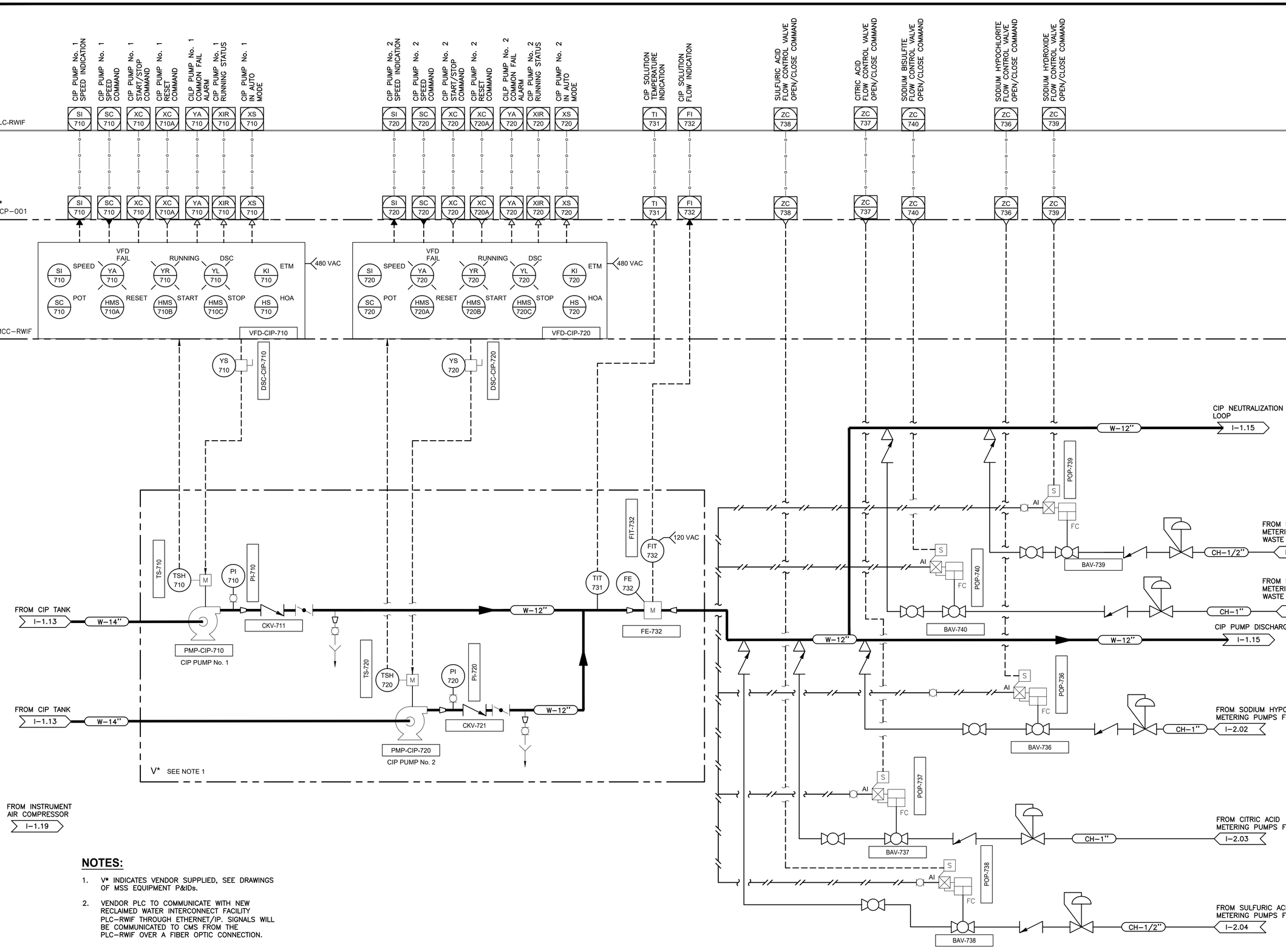

NOTES:

1. V* INDICATES VENDOR SUPPLIED, SEE DRAWINGS OF MSS EQUIPMENT P&IDs.
2. VENDOR PLC TO COMMUNICATE WITH NEW RECLAIMED WATER INTERCONNECT FACILITY PLC-RWIF THROUGH ETHERNET/IP. SIGNALS WILL BE COMMUNICATED TO CMS FROM THE PLC-RWIF OVER A FIBER OPTIC CONNECTION.

1620 West Fountainhead Pkwy
Suite 501
Tempe, Arizona 85282
Phone: (480) 893-8860
Improving Arizona's Infrastructure Since 1942

WILSON ENGINEERS

CITY OF CHANDLER
RECLAIMED WATER INTERCONNECT FACILITY

MEMBRANE FILTRATIONS SYSTEM
CIP PUMPS P&ID

CITY PROJECT NO. WW1901.203
WILSON PROJECT NO. 21007

Design: SC	Drawn: SC	Checked: PKP
Date: 02/2022	Wilson Project No.: 21007	

Revision	Date	Description	By

VERIFY SCALES
BAR IS ONE INCH ON ORIGINAL DRAWING
0 1"
IF NOT ONE INCH ON THIS SHEET, ADJUST SCALES ACCORDINGLY

Professional Engineer Certificate
68430
PHANI KIRAN PEDDINTI
DATE SIGNED 02/23/2022
ARIZONA U.S.A.

Sheet No. **I-1.14**

XREFS: TB-WE-D; SEAL-PKP; SIGN-PKP

G:\PROJECT\21007\CADD\DESIGN\INSTRUMENTATION\21007 I-1.14.DWG, 2/23/2022 12:39:45 PM, PPeddinti, 1:1

AGENCY REVIEW

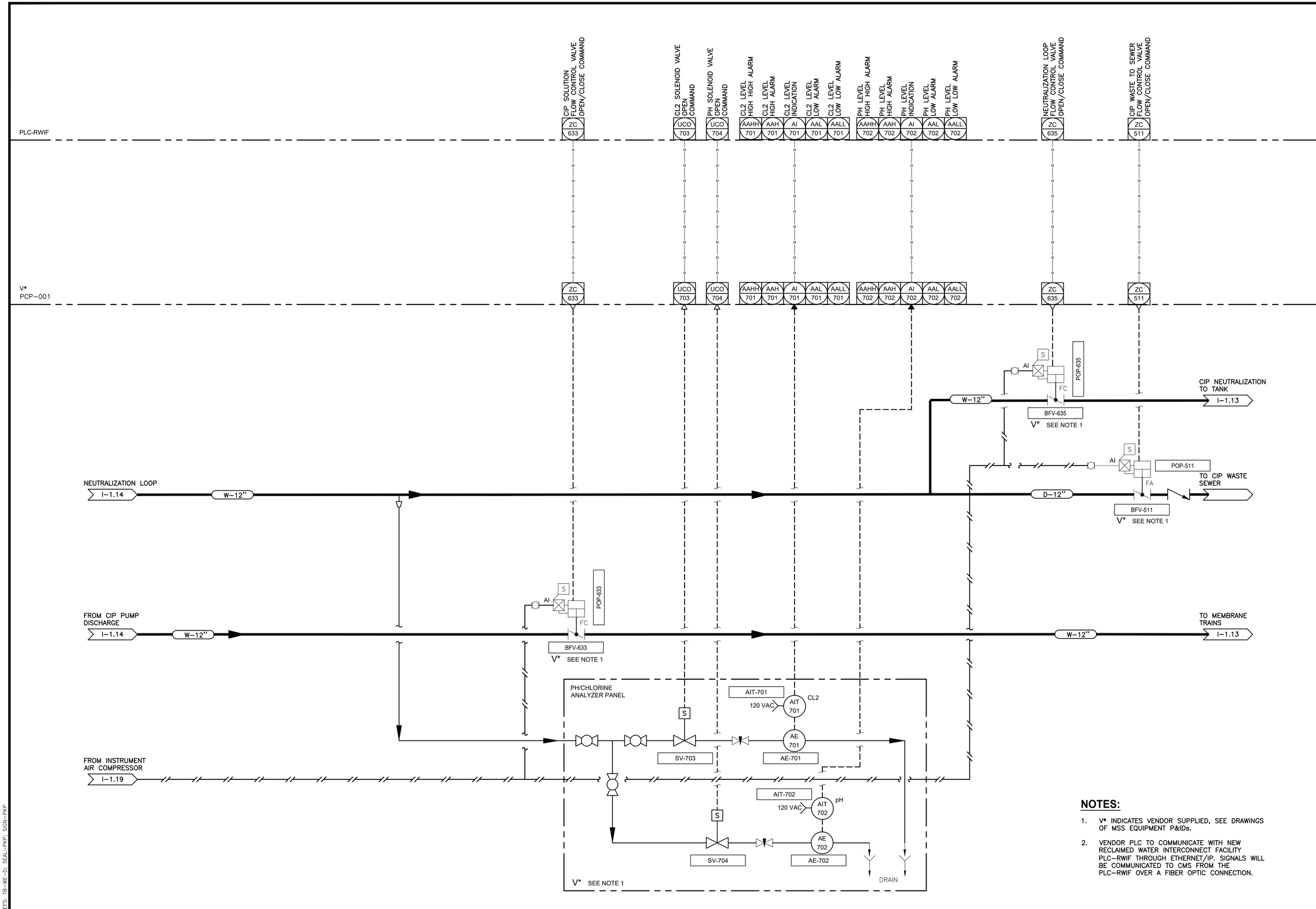

NOTES:

1. V* INDICATES VENDOR SUPPLIED, SEE DRAWINGS OF MSS EQUIPMENT P&IDs.
2. VENDOR PLC TO COMMUNICATE WITH NEW RECLAIMED WATER INTERCONNECT FACILITY PLC-RWIF THROUGH ETHERNET/IP. SIGNALS WILL BE COMMUNICATED TO CMS FROM THE PLC-RWIF OVER A FIBER OPTIC CONNECTION.

WILSON ENGINEERS
1620 West Fountainhead Pkwy
Suite 501
Tempe, Arizona 85282
Phone: (480) 893-8860
Improving Arizona's Infrastructure Since 1942

CITY OF CHANDLER
RECLAIMED WATER INTERCONNECT FACILITY

MEMBRANE FILTRATION SYSTEM
CIP SYSTEM P&ID

CITY PROJECT NO. WW1901.203
WILSON PROJECT NO. 21007

Design: ER	Drawn: ER	Checked: PKP
Date: 02/2022	Wilson Project No.: 21007	

Revision	Date	Description	By

VERIFY SCALES
BAR IS ONE INCH ON ORIGINAL DRAWING
0 1"
IF NOT ONE INCH ON THIS SHEET, ADJUST SCALES ACCORDINGLY

Registered Professional Engineer (Electrical) 68430 PHANI KIRAN PEDDINTI DATE SIGNED 02-23-2022 ARIZONA U.S.A.

Sheet No. I-1.15

XREFS: TB-WE-D; SEAL-PKP; SIGN-PKP

G:\PROJECT\21007\CADD\DESIGN\INSTRUMENTATION\21007 I-1.15.DWG, 2/23/2022 12:39:47 PM, PPeddinti, 1:1

AGENCY REVIEW

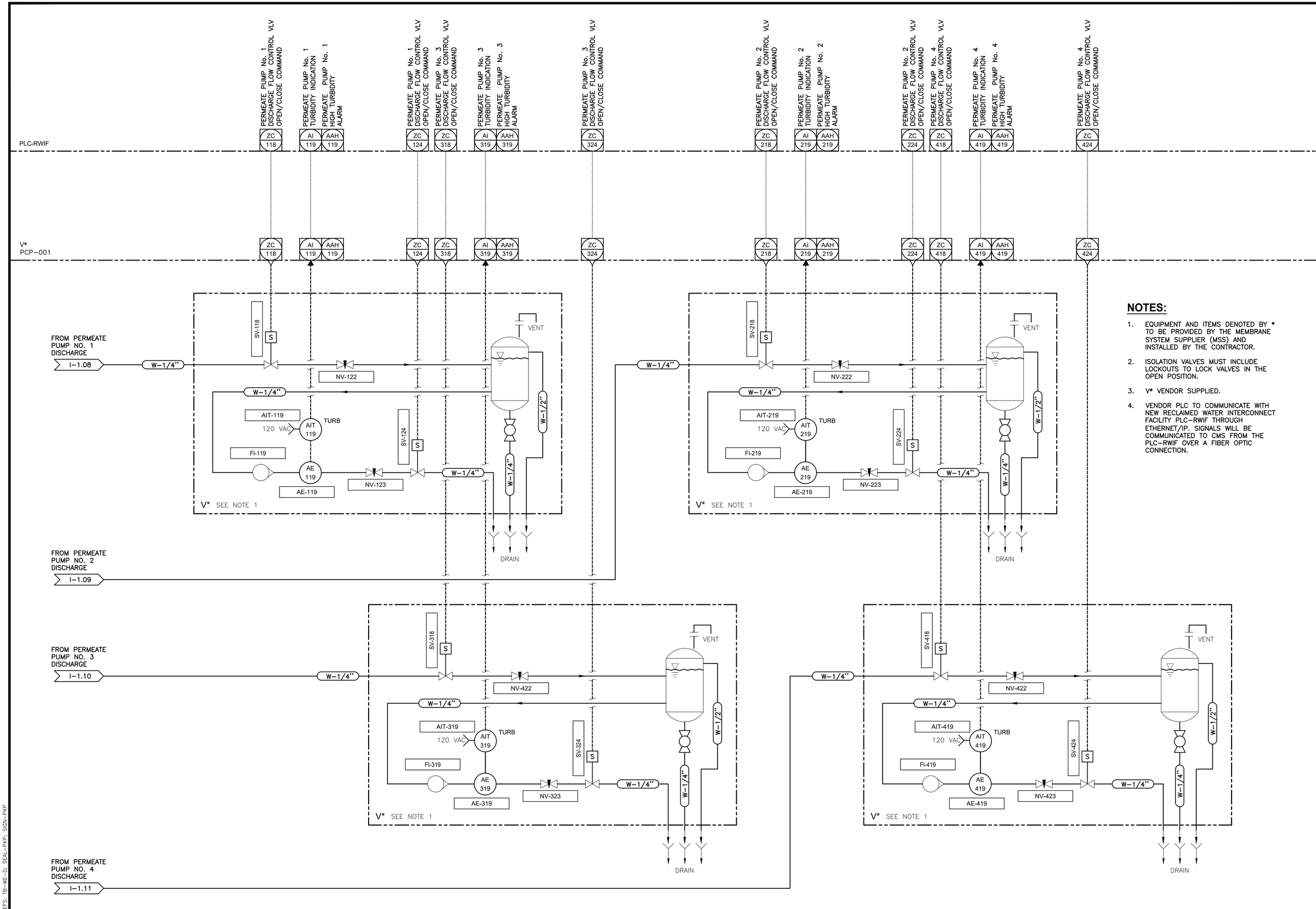

NOTES:

1. EQUIPMENT AND ITEMS DENOTED BY * TO BE PROVIDED BY THE MEMBRANE SYSTEM SUPPLIER (MSS) AND INSTALLED BY THE CONTRACTOR.
2. ISOLATION VALVES MUST INCLUDE LOCKOUTS TO LOCK VALVES IN THE OPEN POSITION.
3. V* VENDOR SUPPLIED.
4. VENDOR PLC TO COMMUNICATE WITH NEW RECLAIMED WATER INTERCONNECT FACILITY PLC-RWIF THROUGH ETHERNET/IP. SIGNALS WILL BE COMMUNICATED TO CMS FROM THE PLC-RWIF OVER A FIBER OPTIC CONNECTION.

WILSON ENGINEERS
1620 West Fountainhead Pkwy
Suite 501
Tempe, Arizona 85282
Phone: (480) 893-8860
Improving Arizona's Infrastructure Since 1942

CITY OF CHANDLER
RECLAIMED WATER INTERCONNECT FACILITY

PERMEATE TURBIDY METER AND DEGASSING COLUMN P&ID

CITY PROJECT NO. WW1901.203
WILSON PROJECT NO. 21007

Design: PKP | Drawn: CRG | Checked: MAC
Date: 02/2022 | Wilson Project No.: 21007

Revision	Date	Description	By

VERIFY SCALES
BAR IS ONE INCH ON ORIGINAL DRAWING
0 1"
IF NOT ONE INCH ON THIS SHEET, ADJUST SCALES ACCORDINGLY

Registered Professional Engineer (Electrical) 68430 PHANI KIRAN PEDDINTI ARIZONA U.S.A. DATE SIGNED 02-23-2022

Sheet No. I-1.16

XREFS: TB-WE-D; SEAL-PKP; SIGN-PKP

G:\PROJECT\21007\CADD\DESIGN\INSTRUMENTATION\21007 I-1.16.DWG, 2/23/2022 12:39:50 PM, PPeddinti, 1:1

AGENCY REVIEW

X#

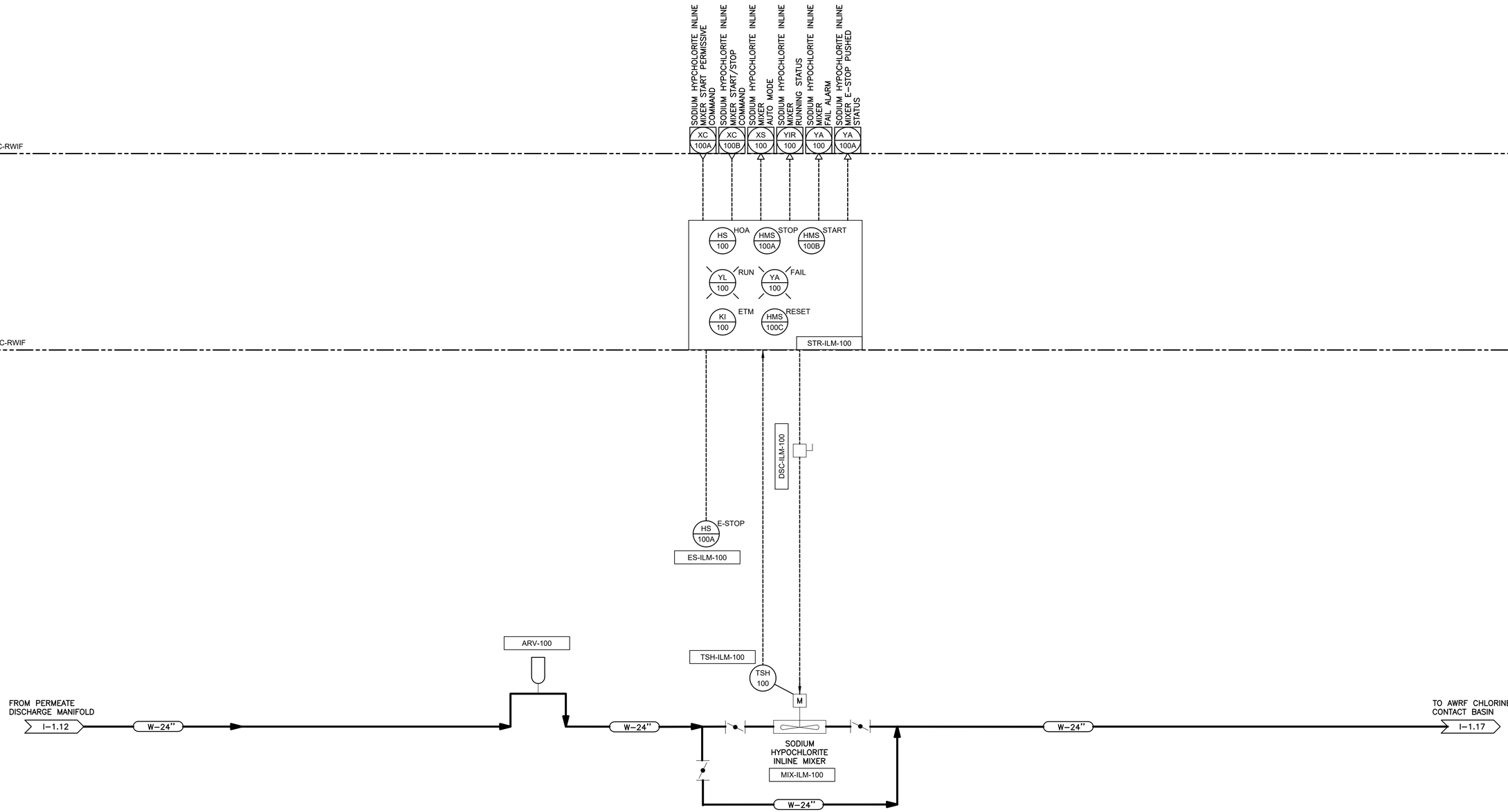

1620 West Fountainhead Pkwy
Suite 501
Tempe, Arizona 85282
Phone: (480) 893-8860

Improving Arizona's Infrastructure Since 1942

WILSON ENGINEERS

CITY OF CHANDLER
RECLAIMED WATER INTERCONNECT FACILITY

MEMBRANE FILTRATION SYSTEM
INLINE MIXER P&ID

CITY PROJECT NO. WW1901.203
WILSON PROJECT NO. 21007

Design: PKP	Drawn: CRG	Checked: MAC
Date: 02/2022	Wilson Project No.: 21007	

Revision	Date	Description	By

VERIFY SCALES
BAR IS ONE INCH ON ORIGINAL DRAWING
0 1"
IF NOT ONE INCH ON THIS SHEET, ADJUST SCALES ACCORDINGLY

Professional Engineer
68430
PHANI KIRAN PEDDINTI
DATE SIGNED 02-23-2022
ARIZONA U.S.A.

Sheet No. **I-1.17**

XREFS: TB-WE-D; SEAL-PKP; SIGN-PKP

G:\PROJECT\21007\CADD\DESIGN\INSTRUMENTATION\21007 I-1.17.DWG, 2/23/2022 12:39:53 PM, PPeddinti, 1:1

AGENCY REVIEW

X#

CMS
I/O RW1
I/O ADM2

YIR 606 · YA 606 · AI 607 · AI 605 · YIR 603 · YA 603 · YIR 600 · YA 600 · YIR 602 · YA 602 · LALL 602 · ZCC 623 · ZCO 623 · ZLC 623 · ZLO 623 · YIA 623 · YA 609 · YA XXX · YIR XXX · YA XXX · YIR 601 · YA 601 · FA 605

RW1-011-14 · RW1-011-15 · RW1-005-01 · ADM2-001-03 · ADM2-011-08 · ADM2-011-09 · ADM2-011-10 · ADM2-011-11 · ADM2-011-14 · ADM2-011-15 · ADM2-011-16 · RW1-016-09 · RW2-016-10 · RW1-015-13 · RW1-015-14 · RW1-015-15 · ADM2-012-16 · RW2-XXX-XX · RW2-XXX-XX · RW2-XXX-XX · ADM2-011-12 · ADM2-011-13 · ADM2-013-16

SEE NOTE 1

ECP-CCB-SMP3
S/S HS 606 · RTM KQI 606 · RUN YL 606 · OL YA 606

ECP-603
S/S HS 603 · RTM KQI 603 · RTM KQI 603 · RUN YL 603 · OL YL 603 · OL YL 603

ECP-CCB-SMP1
S/S HS 600 · RTM KQI 600 · RUN YL 600 · OL YL 600

ECP-602
LLCO OVERRIDE HMS 602C · RTM KQI 602 · START HMS 602A · STOP HMS 602B · TAH YA 602 · LEAK YA 602 · RUN YL 602 · FAIL YA 602

CCB-003-ACE
OSC HS 623A · L/DCS HS 623B · OPEN YL 623A · CLOSE YL 623B

ECP-CCB-SMP2
S/S HS 601 · RTM KQI 601 · RUN YL 601 · OL YL 601

FS 605
CCB-001-ESE
EMERGENCY EYEWASH-SHOWER

CCB-003-SLG · CCB-002-SLG · CCB-001-SLG

ECP-CCB-SMP3
S/S HS XXX · RTM KQI XXX · RUN YL XXX · OL YL XXX

CHLORINE CONTACT BASIN 3
CHLORINE CONTACT BASIN 2
CHLORINE CONTACT BASIN 1

EXISTING AWRF COMPOSITE SAMPLER RELOCATED FROM CURRENT LOCATION
CCB-002-SLP

FQIT 604 · ES
SODIUM HYPOCHLORITE FROM METERING PUMP
FE 604
TREATED EFFLUENT FROM FILTERS
M
CCB-001-FEM

TSH 603
M
CCB-001-RMX

TURBIDITY
AIT 607 · ES
CCB-001-TUR
TURBIDITY
AE 607
M
SAMPLE PUMP NO. 3
CCB-003-SMP
P-606

M
CL2
AE 605
CL2
AIT 605 · ES
CCB-001-CHS
SAMPLE PUMP NO. 1
CCB-001-SMP

YS 602 · TSH 602
LSLL 602
CCD-001-LES
M
DRAIN PUMP
CCD-001-PS
P-602

TO RECLAIMED WATER RESERVOIRS NO. 3

120V FROM PP-EFF CKT.16
M
TO PROPOSED RWIF ANALYZER EFFLUENT PUMP STATION
EFF-1"
SAMPLE PUMP NO. 3
CCB-003-SMP

RWIF COMPOSITE SAMPLER
CCB-003-SLP
120V FROM PP-EF CKT 14

TO RECLAIMED WATER RESERVOIRS

FROM RWIF PERMEATE INLINE MIXER
EFF-24"
I-1.16

TO DRAIN

SAMPLE PUMP NO. 2
CCB-002-SMP
P-601
M
TO EXISTING ANALYZER AIT-135 EFFLUENT PUMP STATION

TO EFFLUENT PUMP STATION

XREFS: TB-WE-D; SEAL-PKP; SIGN-PKP

G:\PROJECT\21007\CADD\DESIGN\INSTRUMENTATION\21007 I-1.18.DWG, 2/23/2022 12:39:55 PM, PPeddinti, 1:1

AGENCY REVIEW

1620 West Fountainhead Pkwy
Suite 501
Tempe, Arizona 85282
Phone: (480) 893-8860
Improving Arizona's Infrastructure Since 1942

WILSON ENGINEERS

CITY OF CHANDLER
RECLAIMED WATER INTERCONNECT FACILITY

CHLORINE CONTACT BASIN MODIFIED P&ID

CITY PROJECT NO. WW1901.203
WILSON PROJECT NO. 21007

Revision	Date	Description	By

Design: PKP
Date: 02/2022
Drawn: CRG
Wilson Project No.: 21007
Checked: PKP

VERIFY SCALES
BAR IS ONE INCH ON ORIGINAL DRAWING
0 1"
IF NOT ONE INCH ON THIS SHEET, ADJUST SCALES ACCORDINGLY

Registered Professional Engineer
6843
PHANI KIRAN PEDDINTI
Date SIGNED 02-23-2022
ARIZONA U.S.A.

Sheet No. I-1.18

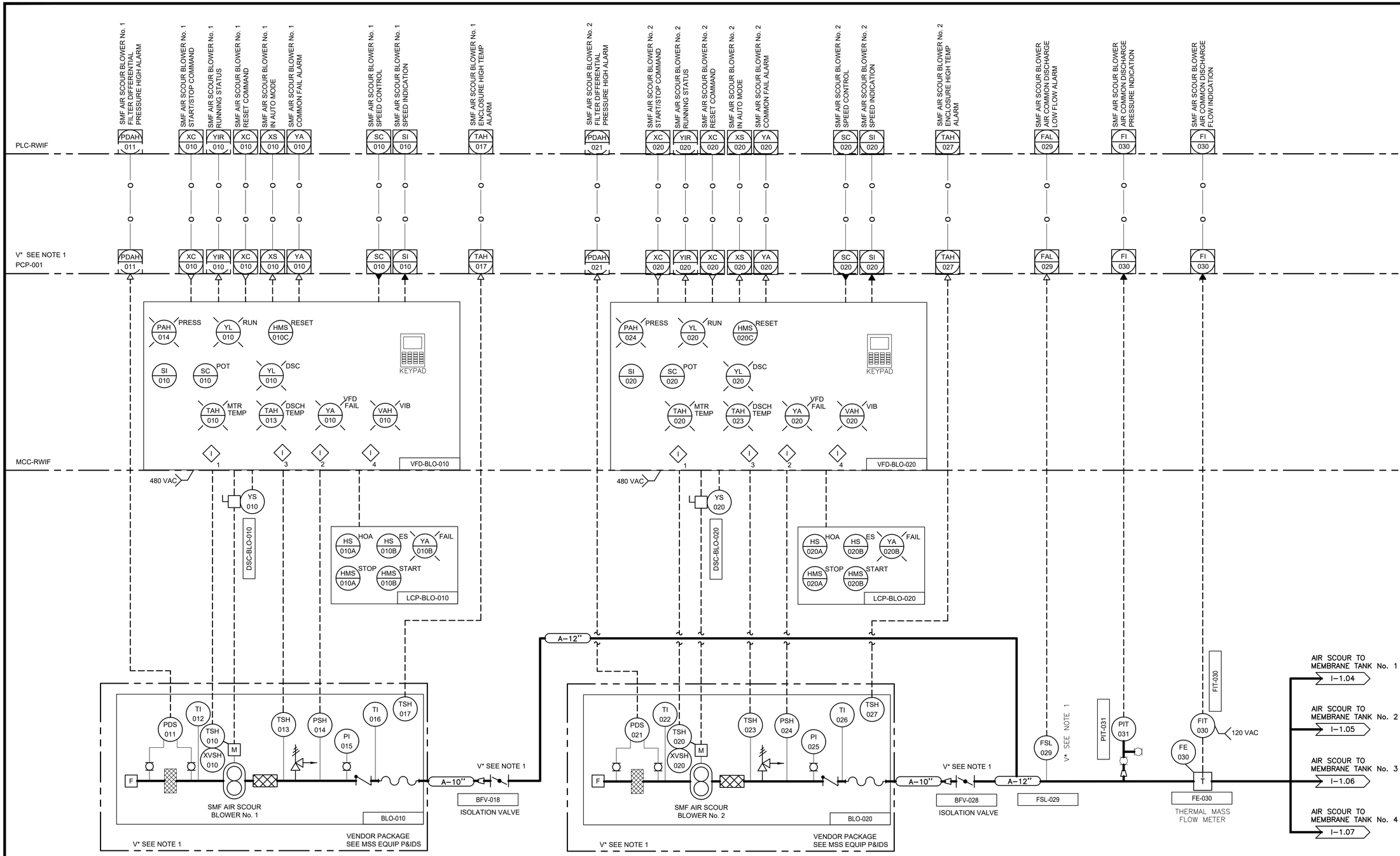

I ELECTRICAL INTERLOCK LEGEND

1. BLOWER STOPS ON HIGH TEMPERATURE OF BLOWER MOTOR , MANUAL RESET REQUIRED.
2. BLOWER STOPS ON HIGH PRESSURE , MANUAL RESET REQUIRED.
3. BLOWER STOPS HIGH TEMPERATURE OF DISCHARGE AIR, MANUAL RESET REQUIRED.
4. BLOWER STOPS ON LOW FLOW. FSL IS A SOFTWARE INTERLOCK. A DCS MANUAL RESET IS REQUIRED.

NOTES:

1. V* INDICATES VENDOR SUPPLIED, SEE DRAWINGS OF MSS EQUIPMENT P&IDs.
2. VENDOR PLC TO COMMUNICATE WITH NEW RECLAIMED WATER INTERCONNECT FACILITY PLC–RWIF THROUGH ETHERNET/IP. SIGNALS WILL BE COMMUNICATED TO CMS FROM THE PLC–RWIF OVER A FIBER OPTIC CONNECTION.

WILSON ENGINEERS
1620 West Fountainhead Pkwy
Suite 501
Tempe, Arizona 85282
Phone: (480) 893-8860
Improving Arizona's Infrastructure Since 1942

CITY OF CHANDLER
RECLAIMED WATER INTERCONNECT FACILITY

MEMBRANE FILTRATION SYSTEM
AIR SCOUR BLOWERS P&ID

CITY PROJECT NO. WW1901.203
WILSON PROJECT NO. 21007

Revision	Date	Description	By

Design: ER
Date: 02/2022
Drawn: ER
Wilson Project No.: 21007
Checked: PKP

VERIFY SCALES
BAR IS ONE INCH ON ORIGINAL DRAWING
0 1"
IF NOT ONE INCH ON THIS SHEET, ADJUST SCALES ACCORDINGLY

Professional Engineer
68430
PHANI KIRAN PEDDINTI
DATE SIGNED 02-23-2022
ARIZONA U.S.A.

Sheet No. I–1.19

AGENCY REVIEW

XREFS: TB-WE-D; SEAL-PKP; SIGN-PKP

G:\PROJECT\21007\CADD\DESIGN\INSTRUMENTATION\21007 I–1.19.DWG, 2/23/2022 12:39:58 PM, PPeddinti, 1:1

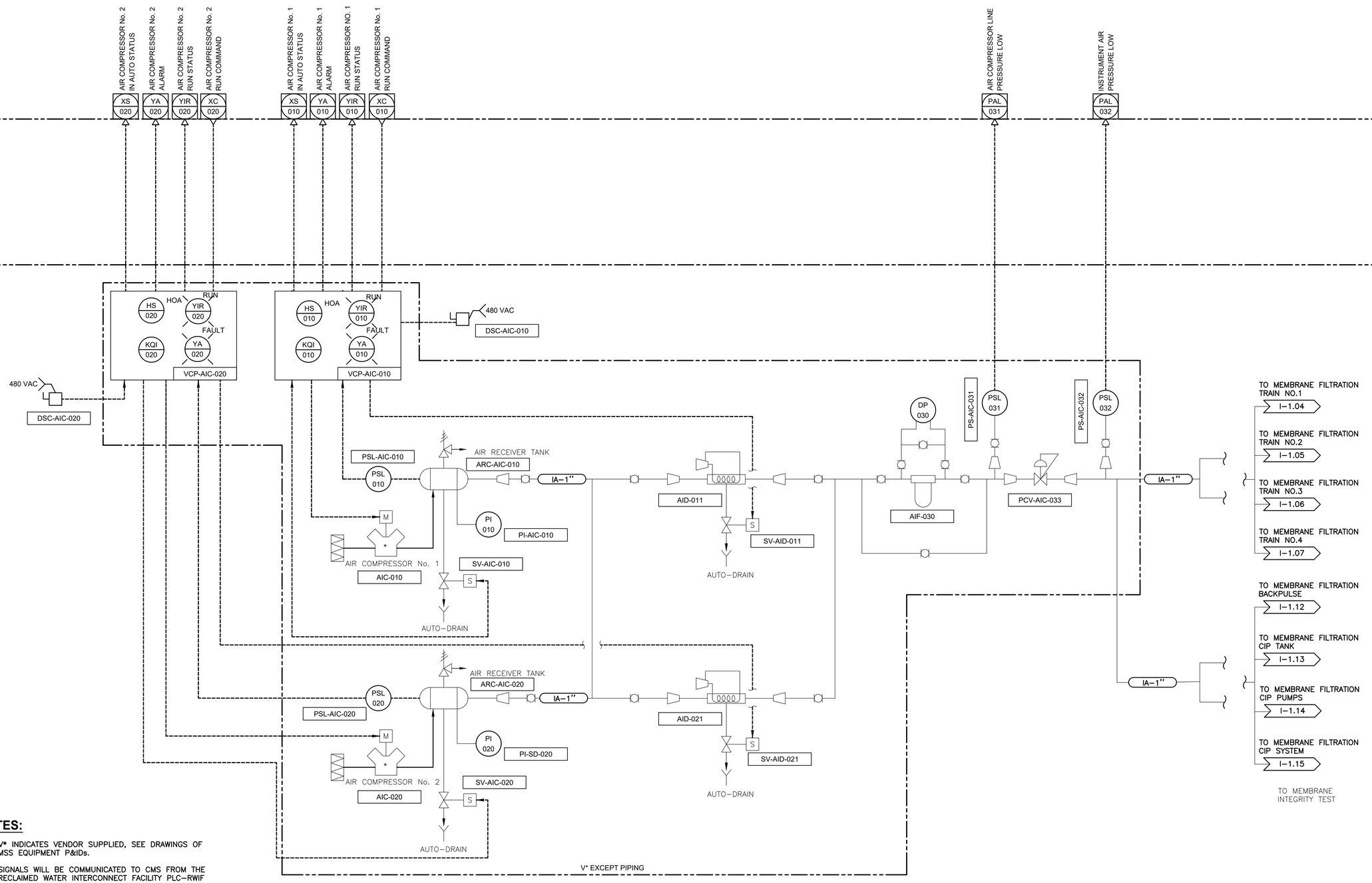

NOTES:

1. V* INDICATES VENDOR SUPPLIED, SEE DRAWINGS OF MSS EQUIPMENT P&IDs.
2. SIGNALS WILL BE COMMUNICATED TO CMS FROM THE RECLAIMED WATER INTERCONNECT FACILITY PLC–RWIF OVER A FIBER OPTIC CONNECTION.

1620 West Fountainhead Pkwy
Suite 501
Tempe, Arizona 85282
Phone: (480) 893–8860
Improving Arizona's Infrastructure Since 1942

WILSON ENGINEERS

CITY OF CHANDLER
RECLAIMED WATER INTERCONNECT FACILITY

MEMBRANE FILTRATION SYSTEM
AIR COMPRESSORS P&ID

CITY PROJECT NO. WW1901.203
WILSON PROJECT NO. 21007

Design: ER	Drawn: ER	Checked: PKP
Date: 02/2022	Wilson Project No.: 21007	

Revision	Date	Description	By

VERIFY SCALES
BAR IS ONE INCH ON ORIGINAL DRAWING
0 1"
IF NOT ONE INCH ON THIS SHEET, ADJUST SCALES ACCORDINGLY

Registered Professional Engineer
68430
PHANI KIRAN PEDDINTI
DATE SIGNED 02/23/2022
ARIZONA U.S.A.

Sheet No. I–1.20

AGENCY REVIEW

XREFS: TB-WE-D; SEAL-PKP; SIGN-PKP

G:\PROJECT\21007\CADD\DESIGN\INSTRUMENTATION\21007 I–1.20.DWG, 2/23/2022 12:40:00 PM, PPeddinti, 1:1

XREFS: TB-WE-D; SEAL-PKP; SIGN-PKP

G:\PROJECT\21007\CADD\DESIGN\INSTRUMENTATION\21007 I-1.21.DWG, 2/23/2022 12:40:03 PM, PReddinti, 1:1

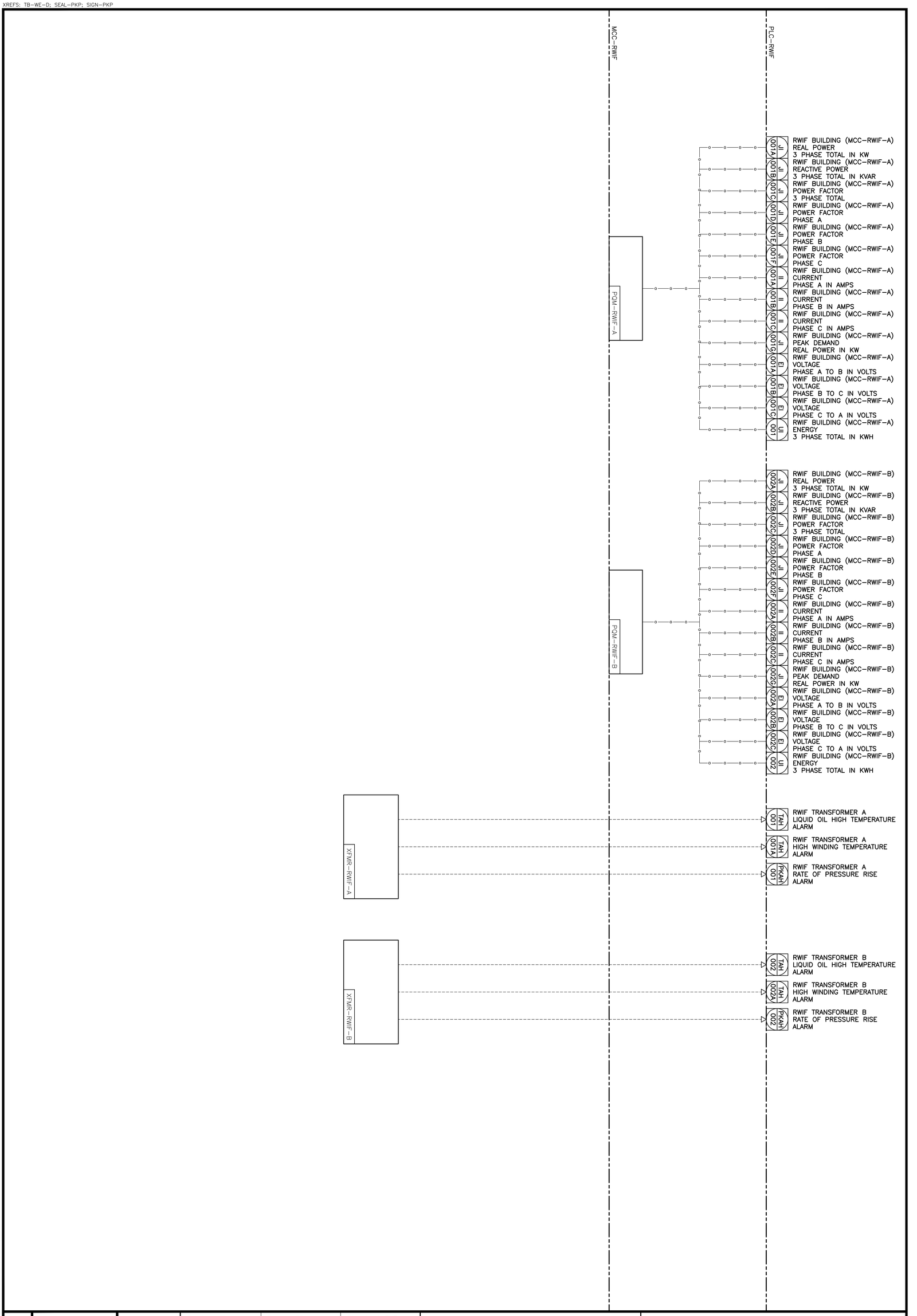

AGENCY REVIEW

Sheet No. I-1.21

Registered Professional Engineer
Patrick K. Peddinti
68430
Expires 09/30/2023
ARIZONA U.S.A.

VERIFY SCALES
BAR IS ONE INCH ON ORIGINAL DRAWING
0 1"
IF NOT ONE INCH ON THIS SHEET, ADJUST SCALES ACCORDINGLY

Design: ER	Drawn: ER	Checked: PKP
Date: 02/2022	Wilson Project No.: 21007	

Revision	Date	Description	By

CITY OF CHANDLER
RECLAIMED WATER INTERCONNECT FACILITY

RECLAIMED WATER INTERCONNECT FACILITY
MISCELLANEOUS P&ID

CITY PROJECT NO. WW1901.203
WILSON PROJECT NO. 21007

WILSON ENGINEERS

1620 West Fountainhead Pkwy
Suite 501
Tempe, Arizona 85282
Phone: (480) 893-8860

Improving Arizona's Infrastructure Since 1942

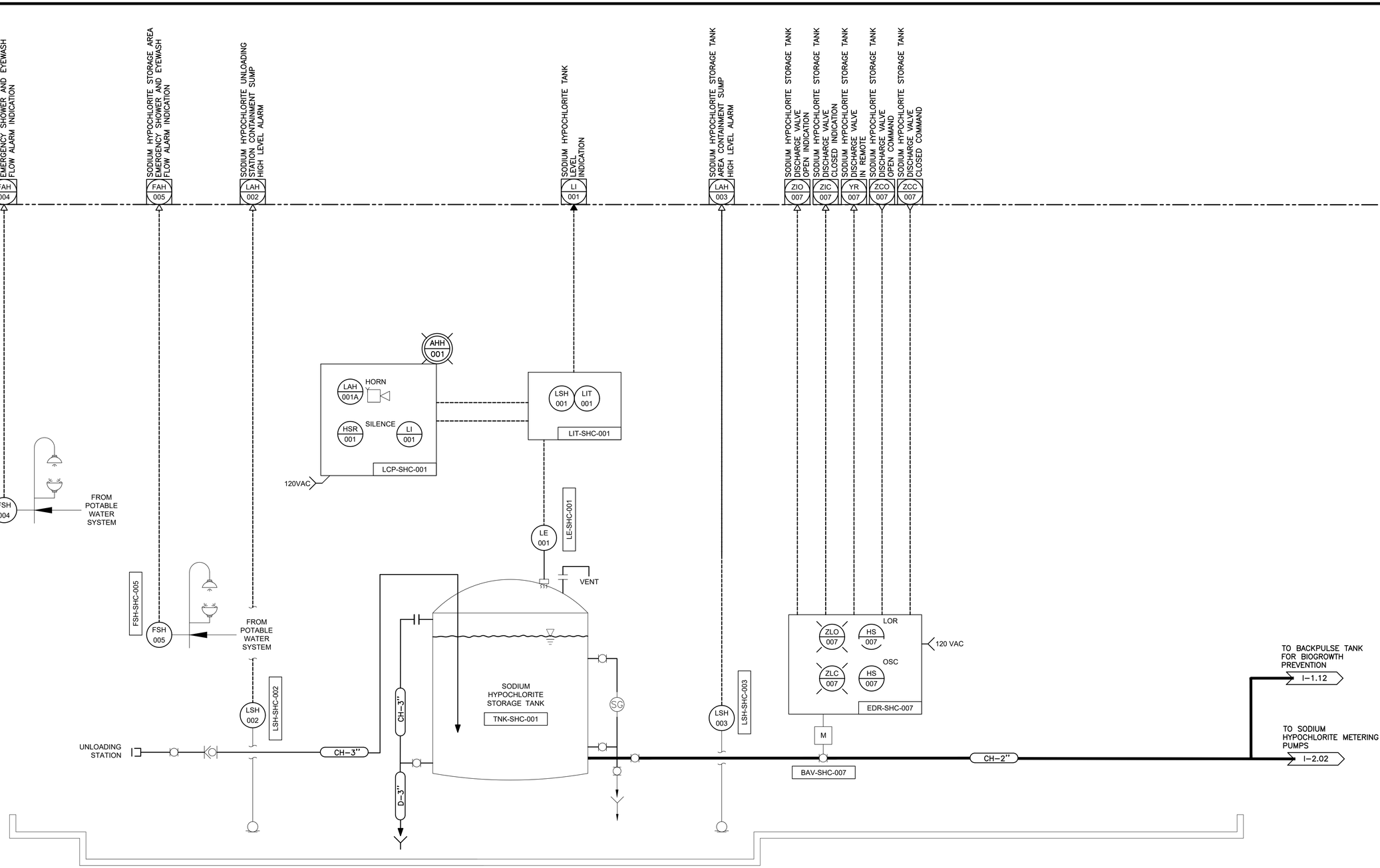

NOTES:

1. SEE M AND C SHEETS FOR PROCESS PIPING AND EQUIPMENT DETAILS.

WILSON ENGINEERS
1620 West Fountainhead Pkwy
Suite 501
Tempe, Arizona 85282
Phone: (480) 893-8860
Improving Arizona's Infrastructure Since 1942

CITY OF CHANDLER
RECLAIMED WATER INTERCONNECT FACILITY

MFS CHEMICAL FACILITY
SODIUM HYPOCHLORITE SYSTEM P&ID

CITY PROJECT NO. WW1901.203
WILSON PROJECT NO. 21007

Design: PKP	Drawn: ER	Checked: PKP
Date: 02/2022	Wilson Project No.: 21007	

Revision	Date	Description	By

VERIFY SCALES
BAR IS ONE INCH ON ORIGINAL DRAWING
0 1"
IF NOT ONE INCH ON THIS SHEET, ADJUST SCALES ACCORDINGLY

Registered Professional Engineer
68430
PHANI KIRAN PEDDINTI
DATE SIGNED 02-23-2022
STATE OF ARIZONA U.S.A.

Sheet No. **I–2.01**

XREFS: TB-WE-D; SEAL-PKP; SIGN-PKP

G:\PROJECT\21007\CADD\DESIGN\INSTRUMENTATION\21007 I–2.01.DWG, 2/23/2022 12:40:05 PM, PPeddinti, 1:1

AGENCY REVIEW

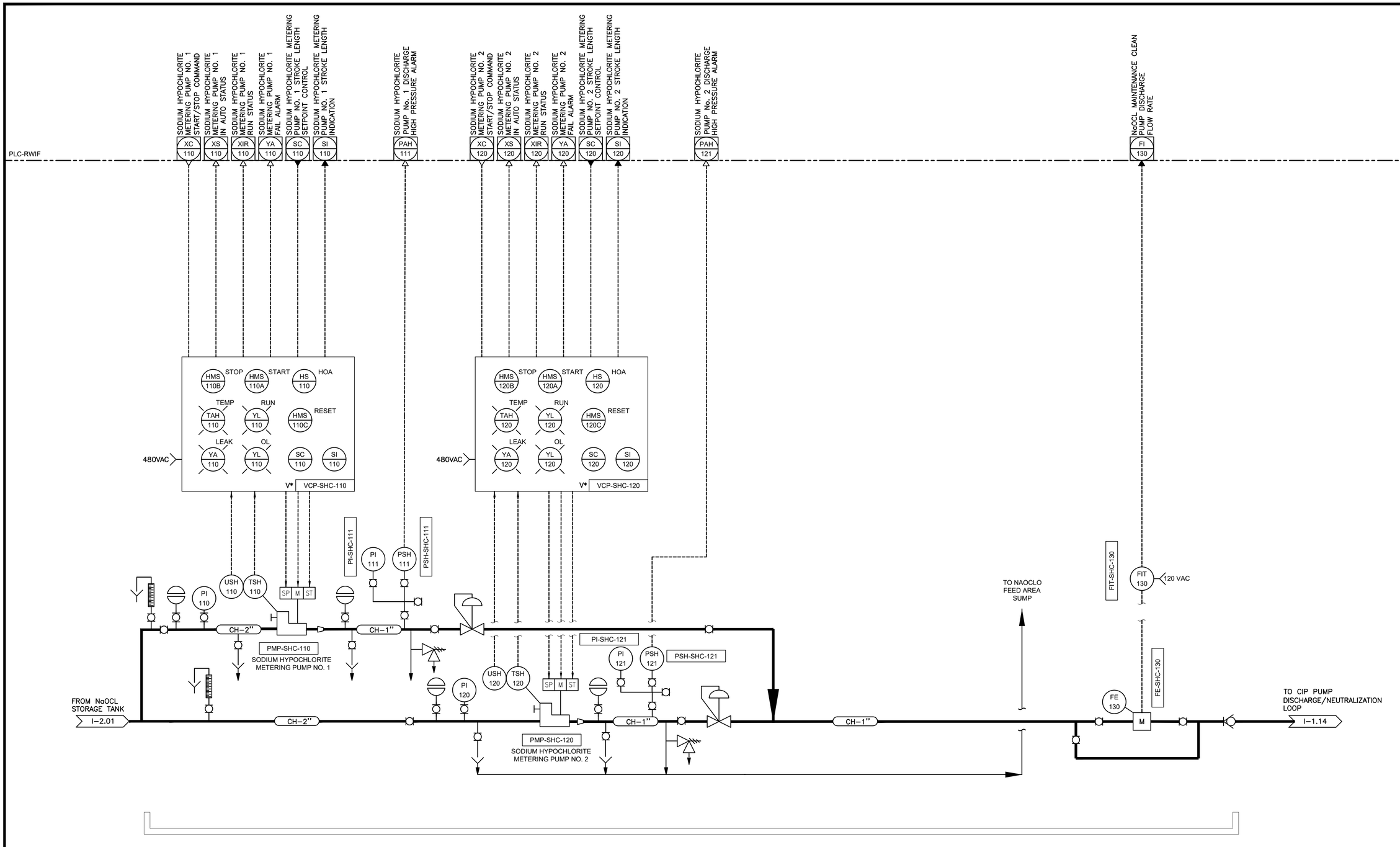

NOTES:

1. V* INDICATES VENDOR SUPPLIED EQUIPMENT.

1620 West Fountainhead Pkwy
Suite 501
Tempe, Arizona 85282
Phone: (480) 893-8860

Improving Arizona's Infrastructure Since 1942

WILSON ENGINEERS

CITY OF CHANDLER
RECLAIMED WATER INTERCONNECT FACILITY

MFS CHEMICAL FACILITY
SODIUM HYPOCHLORITE METERING PUMPS

CITY PROJECT NO. WW1901.203
WILSON PROJECT NO. 21007

Design: ER	Drawn: ER	Checked: PKP		
Date: 02/2022	Wilson Project No.: 21007			
Revision	Date	Description	By	

VERIFY SCALES
BAR IS ONE INCH ON ORIGINAL DRAWING
0 1"
IF NOT ONE INCH ON THIS SHEET, ADJUST SCALES ACCORDINGLY

Professional Engineer
68430
PHANI KIRAN PEDDINTI
DATE SIGNED 02/23/2022
ARIZONA U.S.A.

Sheet No. **I–2.02**

XREFS: TB-WF-D; SEAL-PKP; SIGN-PKP

G:\PROJECT\21007\CADD\DESIGN\INSTRUMENTATION\21007 I–2.02.DWG, 2/23/2022 12:40:08 PM, PPeddinti, 1:1

AGENCY REVIEW

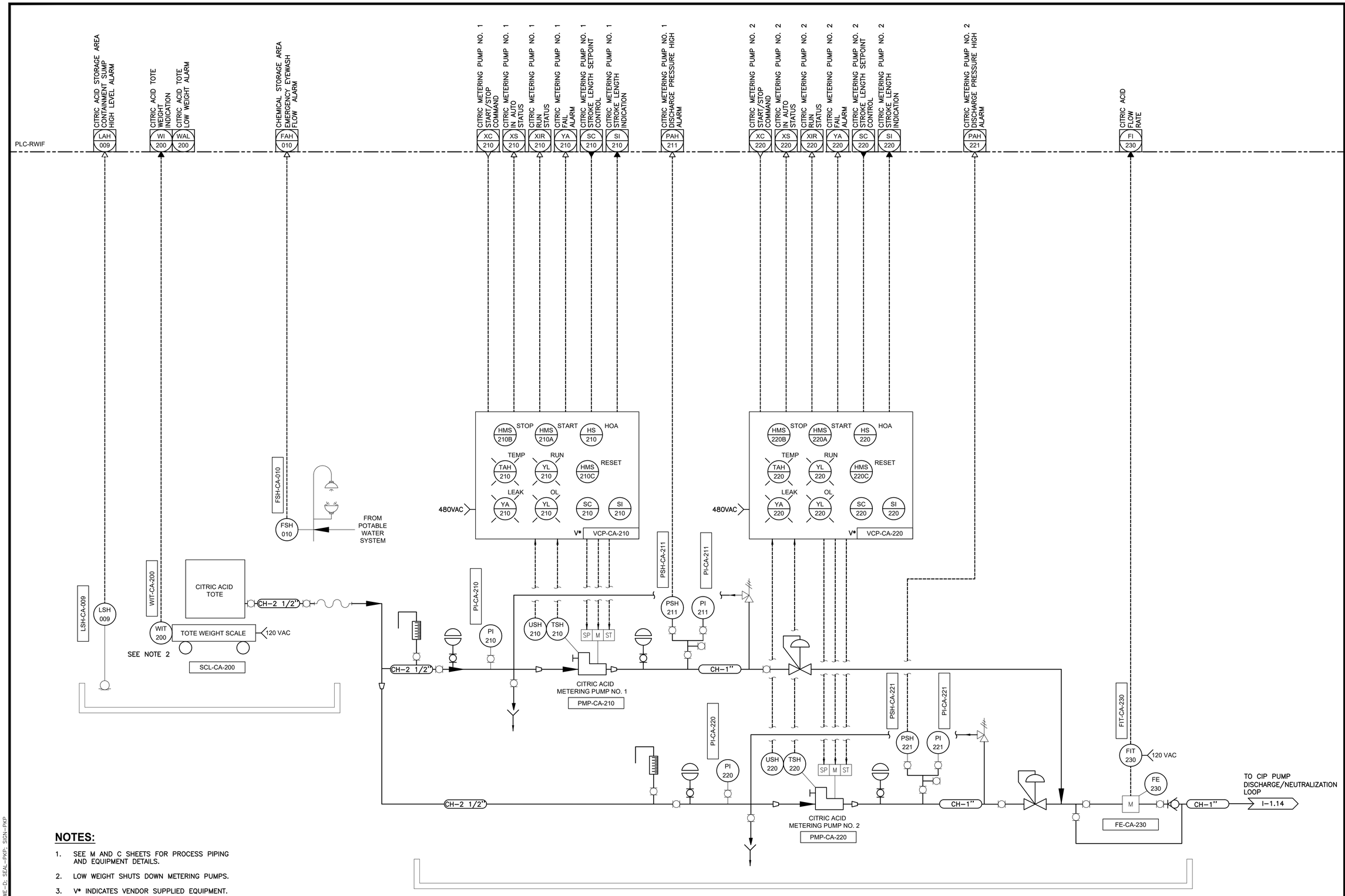

NOTES:

1. SEE M AND C SHEETS FOR PROCESS PIPING AND EQUIPMENT DETAILS.
2. LOW WEIGHT SHUTS DOWN METERING PUMPS.
3. V* INDICATES VENDOR SUPPLIED EQUIPMENT.

WILSON ENGINEERS
1620 West Fountainhead Pkwy
Suite 501
Tempe, Arizona 85282
Phone: (480) 893-8860
Improving Arizona's Infrastructure Since 1942

CITY OF CHANDLER
RECLAIMED WATER INTERCONNECT FACILITY

MFS CHEMICAL FACILITY
CITRIC ACID FEED SYSTEM P&ID

CITY PROJECT NO. WW1901.203
WILSON PROJECT NO. 21007

Design: ER	Drawn: ER	Checked: PKP
Date: 02/2022	Wilson Project No.: 21007	

Revision	Date	Description	By

VERIFY SCALES
BAR IS ONE INCH ON ORIGINAL DRAWING
0 1"
IF NOT ONE INCH ON THIS SHEET, ADJUST SCALES ACCORDINGLY

Registered Professional Engineer (Electrical)
68430
PHANI KIRAN PEDDINTI
DATE SIGNED 02-23-2022
ARIZONA U.S.A.

Sheet No. I-2.03

XREFS: TB-WE-D; SEAL-PKP; SIGN-PKP

G:\PROJECT\21007\CADD\DESIGN\INSTRUMENTATION\21007 I-2.03.DWG, 2/23/2022 12:40:11 PM, PPeddinti, 1:1

AGENCY REVIEW

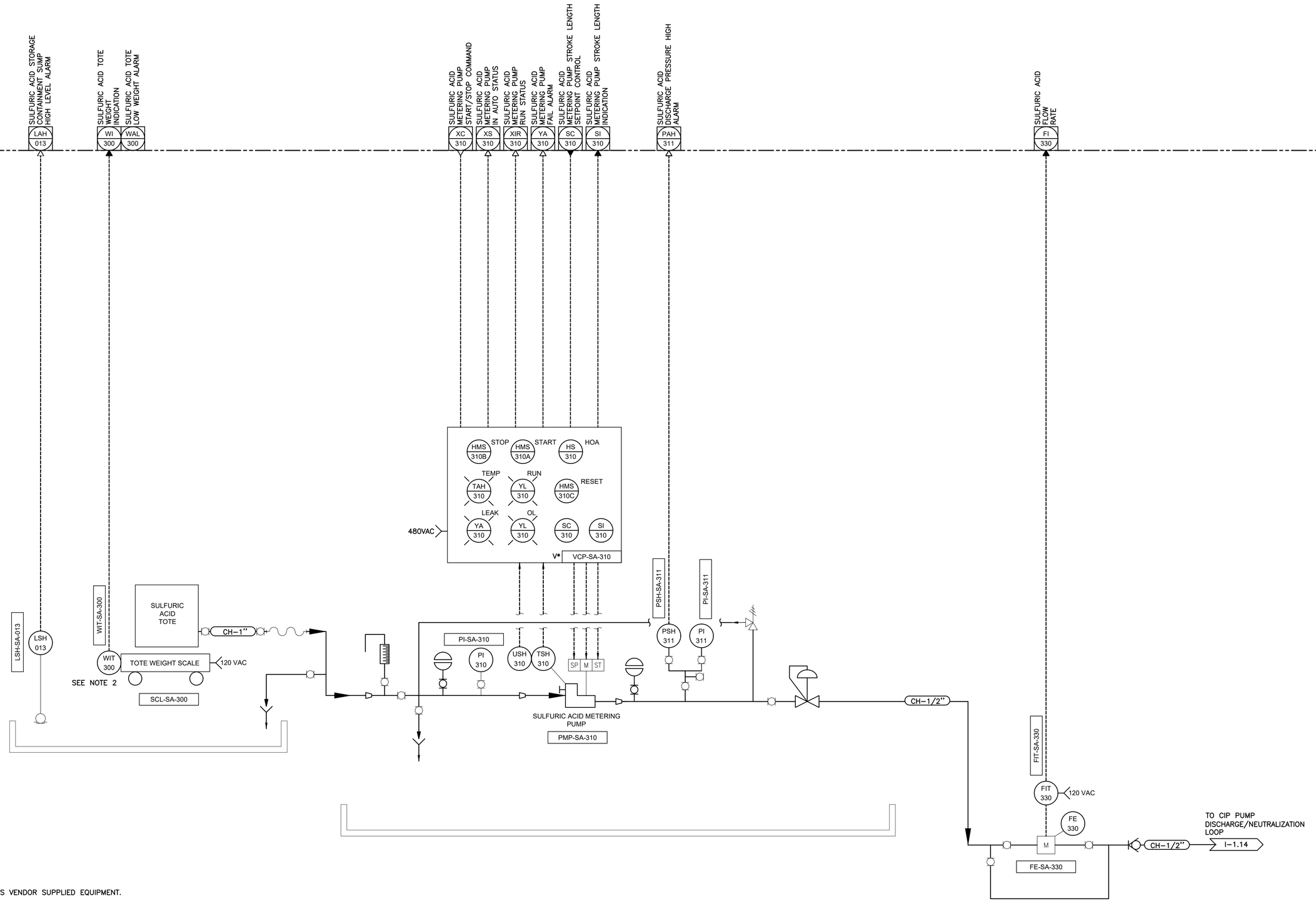

NOTES:

1. V* INDICATES VENDOR SUPPLIED EQUIPMENT.
2. LOW WEIGHT SHUTS DOWN METERING PUMPS.

WILSON ENGINEERS
1620 West Fountainhead Pkwy
Suite 501
Tempe, Arizona 85282
Phone: (480) 893-8860
Improving Arizona's Infrastructure Since 1942

CITY OF CHANDLER
RECLAIMED WATER INTERCONNECT FACILITY

MFS CHEMICAL FACILITY
SULFURIC ACID FEED SYSTEM P&ID

CITY PROJECT NO. WW1901.203
WILSON PROJECT NO. 21007

Revision	Date	Description	By

Design: SC
Date: 02/2022
Drawn: SC
Wilson Project No.: 21007
Checked: PKP

VERIFY SCALES
BAR IS ONE INCH ON ORIGINAL DRAWING
0 1"
IF NOT ONE INCH ON THIS SHEET, ADJUST SCALES ACCORDINGLY

Professional Engineer
68430
PHANI KIRAN PEDDINTI
DATE SIGNED 02-23-2022
ARIZONA U.S.A.

Sheet No. **I-2.04**

AGENCY REVIEW

XREFS: TB-WE-D; SEAL-PKP; SIGN-PKP

G:\PROJECT\21007\CADD\DESIGN\INSTRUMENTATION\21007 I-2.04 .DWG, 2/23/2022 12:40:14 PM, PPeddinti, 1:1

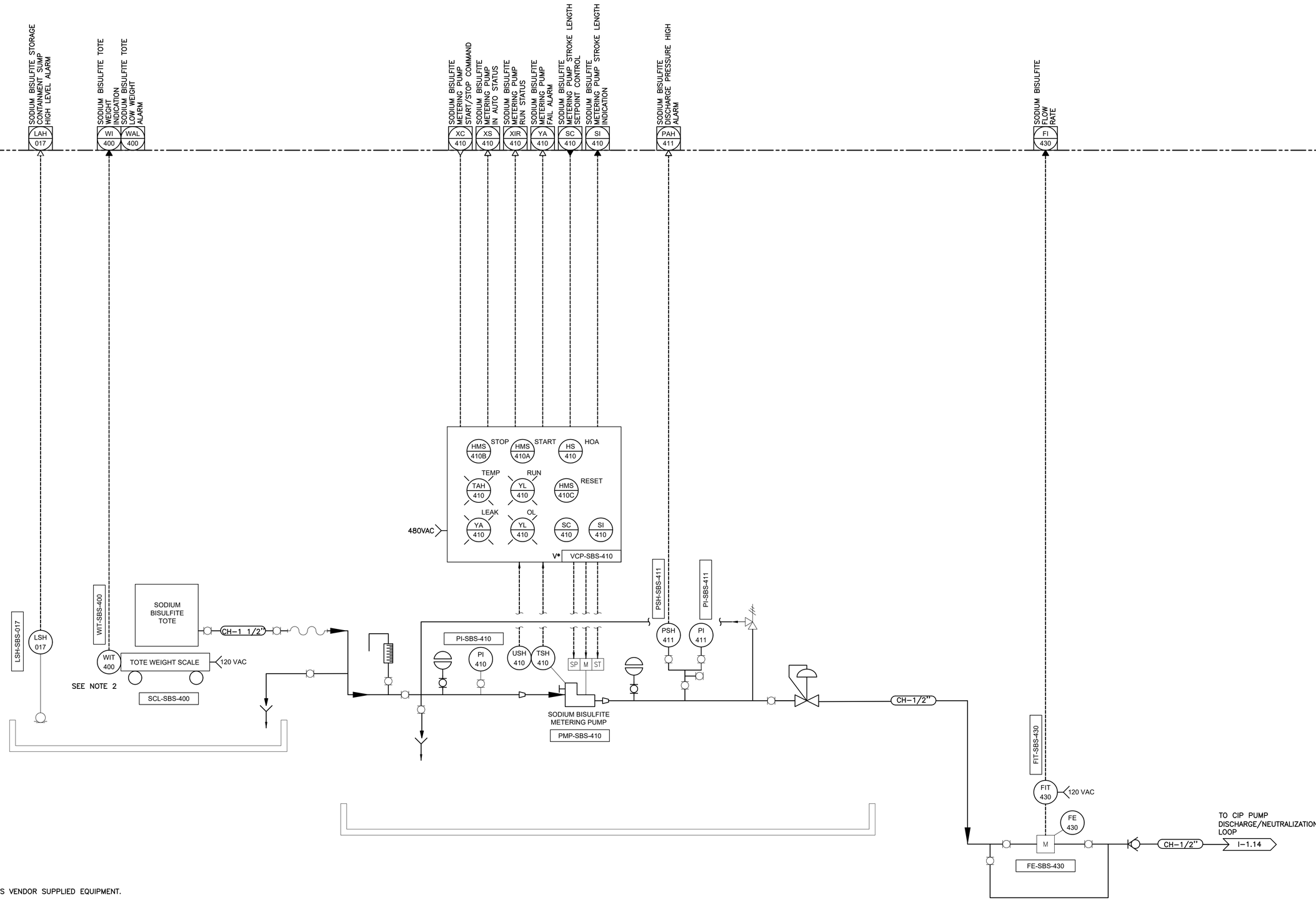

NOTES:

1. V* INDICATES VENDOR SUPPLIED EQUIPMENT.
2. LOW WEIGHT SHUTS DOWN METERING PUMPS.

WILSON ENGINEERS
1620 West Fountainhead Pkwy
Suite 501
Tempe, Arizona 85282
Phone: (480) 893-8860
Improving Arizona's Infrastructure Since 1942

CITY OF CHANDLER
RECLAIMED WATER INTERCONNECT FACILITY

MFS CHEMICAL FACILITY
SODIUM BISULFITE FEED SYSTEM P&ID

CITY PROJECT NO. WW1901.203
WILSON PROJECT NO. 21007

Revision	Date	Description	By

Design: SC
Date: 02/2022
Drawn: SC
Wilson Project No.: 21007
Checked: PKP

VERIFY SCALES
BAR IS ONE INCH ON ORIGINAL DRAWING
0 1"
IF NOT ONE INCH ON THIS SHEET, ADJUST SCALES ACCORDINGLY

Professional Engineer
68430
PHANI KIRAN PEDDINTI
DATE SIGNED 02-23-2022
ARIZONA U.S.A.

Sheet No. I-2.05

AGENCY REVIEW

XREFS: TB-WE-D; SEAL-PKP; SIGN-PKP

G:\PROJECT\21007\CADD\DESIGN\INSTRUMENTATION\21007 I-2.DWG, 2/23/2022 12:40:18 PM, PPeddinti, 1:1

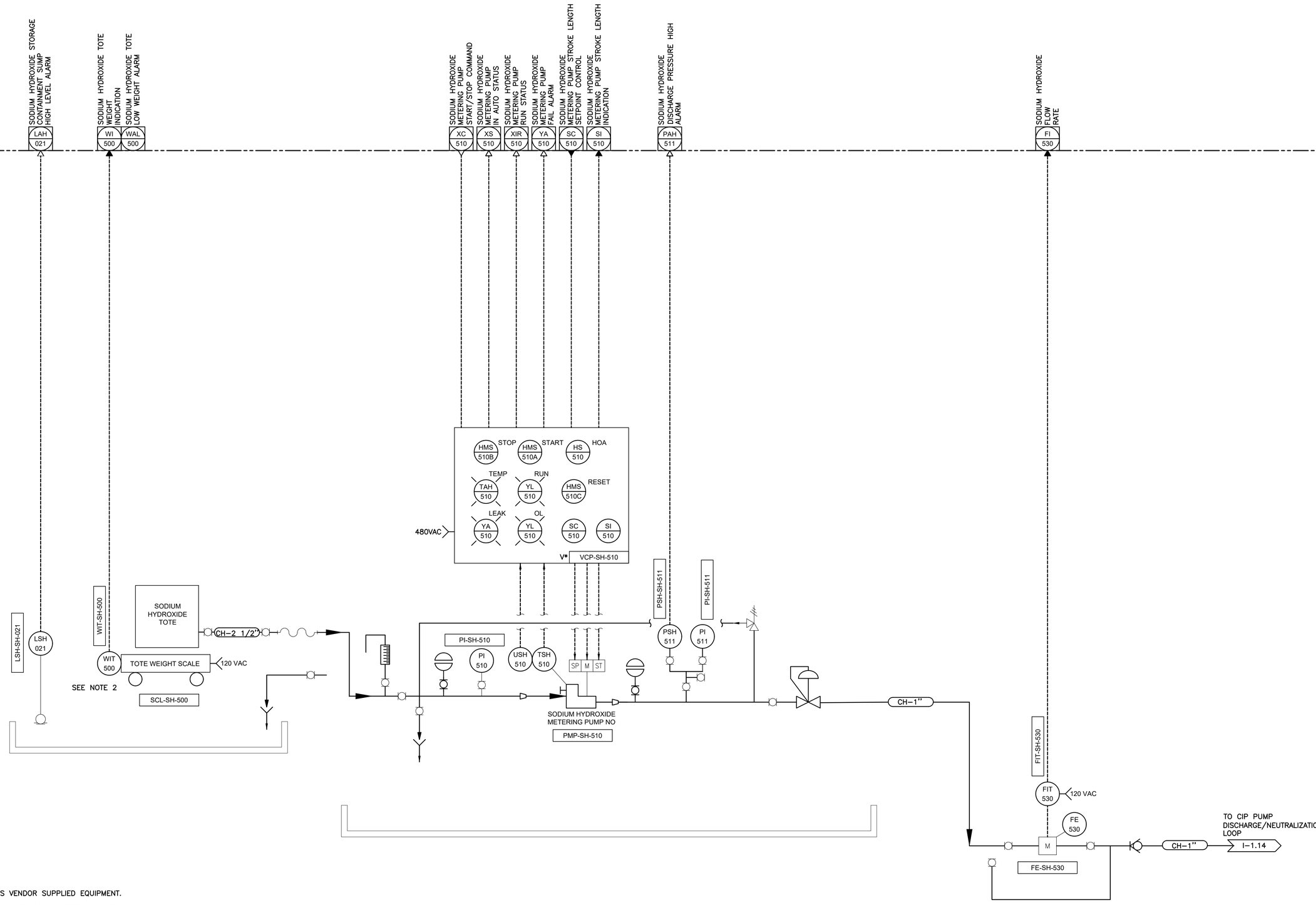

NOTES:

1. V* INDICATES VENDOR SUPPLIED EQUIPMENT.
2. LOW WEIGHT SHUTS DOWN METERING PUMPS.

1620 West Fountainhead Pkwy
Suite 501
Tempe, Arizona 85282
Phone: (480) 893-8860

WILSON ENGINEERS

Improving Arizona's Infrastructure Since 1942

CITY OF CHANDLER
RECLAIMED WATER INTERCONNECT FACILITY

MFS CHEMICAL FACILITY
SODIUM HYDROXIDE FEED SYSTEM P&ID

CITY PROJECT NO. WW1901.203
WILSON PROJECT NO. 21007

Revision	Date	By

Design: SC
Date: 02/2022
Drawn: SC
Wilson Project No.: 21007
Checked: PKP

VERIFY SCALES
BAR IS ONE INCH ON ORIGINAL DRAWING
0 1"
IF NOT ONE INCH ON THIS SHEET, ADJUST SCALES ACCORDINGLY

Registered Professional Engineer
68430
PHANI KIRAN PEDDINTI
DATE SIGNED 02-23-2022
ARIZONA U.S.A.

Sheet No. **I-2.06**

AGENCY REVIEW

XREFS: TB-WE-D; SEAL-PKP; SIGN-PKP

G:\PROJECT\21007\CADD\DESIGN\INSTRUMENTATION\21007 I-2.06.DWG, 2/23/2022 12:40:21 PM, PPeddinti, 1:1

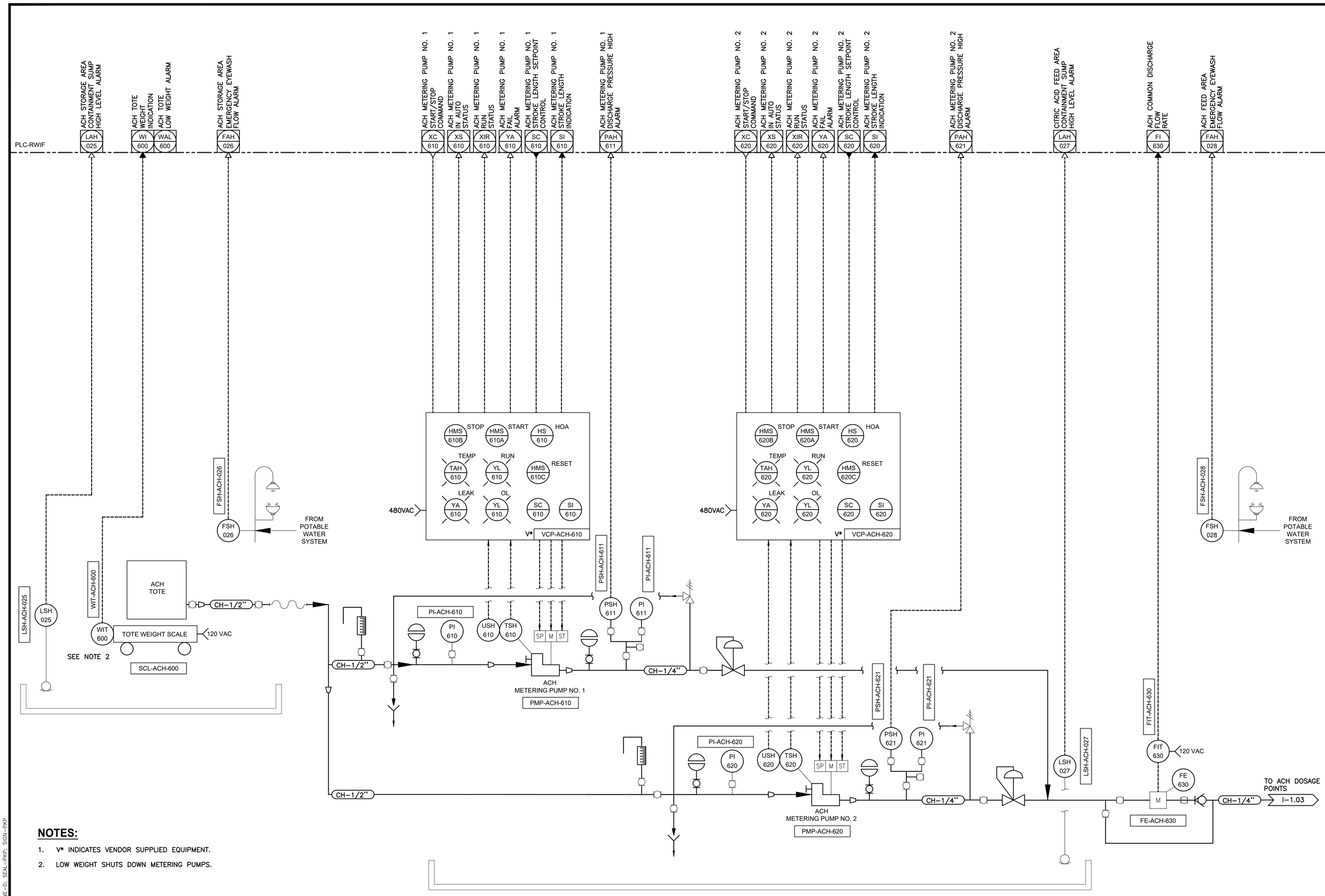

NOTES:

1. V* INDICATES VENDOR SUPPLIED EQUIPMENT.
2. LOW WEIGHT SHUTS DOWN METERING PUMPS.

WILSON ENGINEERS
1620 West Fountainhead Pkwy
Suite 501
Tempe, Arizona 85282
Phone: (480) 893-8860
Improving Arizona's Infrastructure Since 1942

CITY OF CHANDLER
RECLAIMED WATER INTERCONNECT FACILITY

ACH FACILITY
ACH FEED SYSTEM P&ID

CITY PROJECT NO. WW1901.203
WILSON PROJECT NO. 21007

Design: ER	Drawn: ER	Checked: PKP
Date: 02/2022	Wilson Project No.: 21007	

Revision	Date	Description	By

VERIFY SCALES
BAR IS ONE INCH ON ORIGINAL DRAWING
0 1"
IF NOT ONE INCH ON THIS SHEET, ADJUST SCALES ACCORDINGLY

Professional Engineer Certificate No. 68430 PHANI KIRAN PEDDINTI DATE SIGNED 02/23/2022 ARIZONA U.S.A.

Sheet No. I-2.07

AGENCY REVIEW

XREFS: TB-WE-0; SEAL-PKP; SIGN-PKP

G:\PROJECT\21007\CADD\DESIGN\INSTRUMENTATION\21007 I-2.07.DWG, 2/23/2022 12:40:25 PM, PPeddinti, 1:1

CMS

I/O ADM2

FA 625 — ADM2-013-06 — FS 625 — BSHY-001-ESE — EMERGENCY EYEWASH-SHOWER

LAH 630, LAL 630, LI 630 — ADM2-013-14, ADM2-013-15, ADM2-002-07

YIN LALL 611 — ADM2-013-10

LALL 611 — ADM2-013-07

YIN LALL 621 — ADM2-013-11

LALL 621 — ADM2-013-08

YIN LALL 631 — ADM2-013-13

LALL 631 — ADM2-013-09

FA 626A — ADM2-013-16 — FS 626A — BSHY-003-ESE — EMERGENCY EYEWASH-SHOWER

ECP-BSHY-LES

LALL 611 — E4 — HMS 611 — TANK #1 IN/OUT SERVICE — TANK #1 OUT OF SERVICE — YA 611

LALL 621 — E4 — HMS 621 — TANK #2 IN/OUT SERVICE — TANK #2 OUT OF SERVICE — YA 621

LALL 631 — E4 — HMS 631 — TANK #3 IN/OUT SERVICE — TANK #3 OUT OF SERVICE — YA 631

LOW LOW LEVEL SIGNAL FROM BULK SODIUM HYPOCHLORITE HOLDING TANK NO. 1

LOW LOW LEVEL SIGNAL FROM BULK SODIUM HYPOCHLORITE HOLDING TANK NO. 2

LSH 630, LSL 630, LIT 630 — ES

FROM EXISTING BULK SODIUM HYPOCHLORITE TANK FILL LINE

BSHY-003-RLM — LE 630

LSLL 631 — BSHY-003-LES

BULK SODIUM HYPOCHLORITE HOLDING TANK NO. 3

TO EXISTING BULK SODIUM HYPOCHLORITE HOLDING TANKS No.1 & 2

CH-3"

TO EXISTING BULK SODIUM HYPOCHLORITE PUMP FEED LINE

PLC-RWIF

DISINFECTION SODIUM HYPOCHLORITE METERING PUMP NO. 1 RUN STATUS — XS 810
DISINFECTION SODIUM HYPOCHLORITE METERING PUMP NO. 1 FAIL ALARM — YA 810
DISINFECTION SODIUM HYPOCHLORITE METERING PUMP NO. 1 IN AUTO — YIR 810
DISINFECTION SODIUM HYPOCHLORITE METERING PUMP NO. 1 START/STOP COMMAND — XC 810
DISINFECTION SODIUM HYPOCHLORITE METERING PUMP NO. 1 STROKE LENGTH SETPOINT CONTROL — SC 810
DISINFECTION SODIUM HYPOCHLORITE METERING PUMP NO. 1 STROKE LENGTH INDICATION — SI 810
DISINFECTION SODIUM HYPOCHLORITE METERING PUMP NO. 1 DISCHARGE PRESSURE HIGH ALARM — PAH 811

DISINFECTION SODIUM HYPOCHLORITE METERING PUMP NO. 2 RUN STATUS — XS 820
DISINFECTION SODIUM HYPOCHLORITE METERING PUMP NO. 2 FAIL ALARM — YA 820
DISINFECTION SODIUM HYPOCHLORITE METERING PUMP NO. 2 IN AUTO — YIR 820
DISINFECTION SODIUM HYPOCHLORITE METERING PUMP NO. 2 START/STOP COMMAND — XC 820
DISINFECTION SODIUM HYPOCHLORITE METERING PUMP NO. 2 STROKE LENGTH SETPOINT CONTROL — SC 820
DISINFECTION SODIUM HYPOCHLORITE METERING PUMP NO.2 STROKE LENGTH INDICATION — SI 820
DISINFECTION SODIUM HYPOCHLORITE METERING PUMP NO. 2 DISCHARGE PRESSURE HIGH ALARM — PAH 821

HMS 810B STOP — HMS 810A START — HS 810 HOA — TAH 810 TEMP — YL 810 RUN — HMS 810C RESET — YA 810 LEAK — YL 810 OL — SC 810 — SI 810 — 480VAC — V* VCP-BSHC-810

HMS 820B STOP — HMS 820A START — HS 820 HOA — TAH 820 TEMP — YL 820 RUN — HMS 820C RESET — YA 820 LEAK — YL 820 OL — SC 820 — SI 820 — 480VAC — V* VCP-BSHC-820

PSH-BSHC-811 — PSH 811 — PI-BSHC-811 — PI 811

PI-BSHC-810 — PI 810 — USH 810 — TSH 810 — SP M ST

CH-1/4"

RWIF DISINFECTION SODIUM HYPOCHLORITE METERING PUMP NO. 1

PMP-BSHC-810

PSH-BSHC-821 — PSH 821 — PI-BSHC-821 — PI 821

PI-BSHC-820 — PI 820 — USH 820 — TSH 820 — SP M ST

RWIF DISINFECTION SODIUM HYPOCHLORITE METERING PUMP NO. 2

PMP-BSHC-820

TO RWIF PERMEATE DISCHARGE MANIFOLD I-1.16

NOTES:

1. SEE M AND C SHEETS FOR PROCESS PIPING AND EQUIPMENT DETAILS.
2. V* INDICATES VENDOR SUPPLIED EQUIPMENT.

1620 West Fountainhead Pkwy
Suite 501
Tempe, Arizona 85282
Phone: (480) 893-8860

Improving Arizona's Infrastructure Since 1942

WILSON ENGINEERS

CITY OF CHANDLER
RECLAIMED WATER INTERCONNECT FACILITY

MODIFIED BULK SODIUM HYPOCHLORITE FACILITY
P&ID 2 OF 2

CITY PROJECT NO. WW1901.203
WILSON PROJECT NO. 21007

Revision	Date	Description	By

Design: SC
Date: 02/2022
Drawn: SC
Wilson Project No.: 21007
Checked: PKP

VERIFY SCALES
BAR IS ONE INCH ON ORIGINAL DRAWING
0 — 1"
IF NOT ONE INCH ON THIS SHEET, ADJUST SCALES ACCORDINGLY

Professional Engineer — 68430 PHANI KIRAN PEDDINTI — STATE OF ARIZONA U.S.A. — SIGNED 02-23-2022

Sheet No. I-2.09

XREFS: TB-WE-D; SEAL-PKP; SIGN-PKP

G:\PROJECT\21007\CADD\DESIGN\INSTRUMENTATION\21007 I-2.09.DWG, 2/23/2022 12:40:33 PM, PPeddinti, 1:1

AGENCY REVIEW

Chandler + Arizona
Where Values Make The Difference

CITY OF CHANDLER

RECLAIMED WATER INTERCONNECT FACILITY PROJECT

VOLUME 2 OF 3

TECHNICAL SPECIFICATIONS

AGENCY REVIEW

City Project No. WW1901.203

Wilson Engineers Project No. 21-007

Registered Professional Engineer (Civil)
CERTIFICATE NO.
30185
UDAY K.
GANDHE
Date Signed 2/28/22
ARIZONA U. S. A.

FEBRUARY 2022

Registered Professional Engineer (Civil)
CERTIFICATE NO.
41008
SREERAM
RENGARAJ
Date Signed 02/28/22
ARIZONA, U.S.A.

WILSON
ENGINEERS

Registered Professional Engineer (Electrical)
CERTIFICATE NO.
68430
PHANI KIRAN
PEDDINTI
Date Signed 02/28/22
ARIZONA U.S.A.

TECHNICAL SPECIFICATIONS

TABLE OF CONTENTS
FOR
CITY OF CHANDLER
RECLAIMED WATER INTERCONNECT FACILITY PROJECT
COC PROJECT NO. WW1901.203
WILSON PROJECT NO. 21-007

Specification Section	Specification Title	GMP 1	GMP 2
DIVISION 1 - GENERAL REQUIREMENTS			
01010	SUMMARY OF WORK	X	X
01012	PLANT OPERATION DURING CONSTRUCTION		X
01013	ENGINEERING SERVICES		X
01040	COORDINATION		X
01050	FIELD ENGINEERING/SURVEYING		X
01090	REFERENCE STANDARDS/ABBREVIATIONS		X
01201	PRE-CONSTRUCTION CONFERENCE		X
01202	PROGRESS MEETINGS		X
01300	SUBMITTALS	X	X
01310	PROGRESS SCHEDULE		X
01380	CONSTRUCTION PHOTOGRAPHS		X
01400	QUALITY CONTROL		X
01410	TESTING		X
01412	STORMWATER POLLUTION PREVENTION PLAN AND PERMIT		X
01414	EARTHMOVING AND DUST CONTROL		X
01451	TESTING LABORATORY SERVICES FURNISHED BY OWNER		X
01500	CONSTRUCTION FACILITIES AND TEMPORARY CONTROLS		X
01640	MATERIALS AND EQUIPMENT	X	X
01650	STARTING OF SYSTEMS	X	X
01660	FIELD TESTS OF EQUIPMENT	X	X
01700	CONTRACT CLOSEOUT		X
01710	CLEANING		X
01715	TESTING OF HYDRAULIC STRUCTURES		X
01720	RECORD DOCUMENTS		X
01730	OPERATION AND MAINTENANCE DATA	X	X
01750	SPARE PARTS AND MAINTENANCE MATERIAL	X	X
01800	EQUIPMENT SCHEDULE		X
01821	INSTRUCTION OF OPERATIONS AND MAINTENANCE PERSONNEL		X
DIVISION 2 - SITE CONSTRUCTION			
02050	DEMOLITIONS		X

Specification Section	Specification Title	GMP 1	GMP 2
DIVISION 2 - SITE CONSTRUCTION (CONT'D)			
02100	SITE PREPARATION		X
02150	SHORING		X
02315	EARTHWORK, EXCAVATION, AND BACKFILL		X
02318	CRUSHED STONE, GRAVEL, AND DECOMPOSED GRANITE		X
02319	RIPRAP		X
02371	FILTER FABRIC FOR RIPRAP CHANNELS		X
02480	LANDSCAPE		X
02500	ASPHALT PAVEMENT		X
02580	PAVEMENT MARKINGS		X
02751	PORTLAND CEMENT CONCRETE PAVING		X
DIVISION 3 - CONCRETE			
03100	CONCRETE FORMWORK		X
03200	CONCRETE REINFORCEMENT		X
03251	CONCRETE JOINTS		X
03300	CAST-IN-PLACE CONCRETE		X
03600	GROUT		X
DIVISION 4 - MASONRY			
04820	REINFORCED UNIT MASONRY ASSEMBLIES		X
DIVISION 5 - METALS			
05051	ANCHOR BOLTS, TOGGLE BOLTS, AND CONCRETE INSERTS		X
05120	STRUCTURAL STEEL AND FRAMING		X
05500	METAL FABRICATIONS		X
05502	CANTILEVERED SLIDING GATE		X
05510	METAL STAIRS		X
05521	ALUMINUM HANDRAIL		X
05530	ALUMINUM GRATING		X
05532	ALUMINUM CHECKERED PLATE		X
DIVISION 6 - WOOD AND PLASTICS			
06100	ROUGH CARPENTRY		X
06600	FIBERGLASS FABRICATIONS		X
DIVISION 7 - THERMAL AND MOISTURE PROTECTION			
07900	JOINT SEALERS		X
DIVISION 8 - DOORS AND WINDOWS			
08110	STEEL DOORS AND FRAMES		X
08331	OVERHEAD COILING DOORS		X
08710	DOOR HARDWARE		X

Specification Section	Specification Title	GMP 1	GMP 2
DIVISION 9 - FINISHING			
09900	PAINTING	X	X
09900.1	ARCHITECTURAL PAINTS AND COATINGS		X
09910	PVC LINER		X
09920	COATING SYSTEMS		X
09920.1	MEMBRANE FACILITY COATING SYSTEMS		X
09983	VINYL ESTER WITH GRAPHITE LINING SYSTEM		X
DIVISION 10 - SPECIALTIES			
10210	PRIVACY PANELS		X
10400	EQUIPMENT IDENTIFICATION PLATES		X
10425	SIGNS		X
10523	FIRE EXTINGUISHERS, CABINETS, AND ACCESSORIES		X
10811	BIRD CONTROL DEVICES		X
DIVISION 11 - EQUIPMENT			
11217	SAMPLE PUMPS		X
11220	INLINE RAPID MIXERS		X
11285	HYDRAULIC GATES		X
11295	HYDRAULIC VALVES	X	X
11311	SUBMERSIBLE PUMPS		X
11314	END SUCTION CENTRIFUGAL PUMPS*	X	
11320	SELF-CLEANING STRAINERS		X
11371	POSITIVE DISPLACEMENT BLOWERS*	X	
11372	AIR COMPRESSORS*	X	
11500.1	MEMBRANE EQUIPMENT SYSTEM*	X	
11715	CHEMICAL METERING PUMPS AND APPURTENANCES		X
DIVISION 12 - FURNISHINGS			
12492	HORIZONTAL LOUVER BLINDS		X
DIVISION 13 - SPECIAL CONSTRUCTION			
13121	METAL CANOPIES		X
13127	EXTRUDED FLAT PANEL COVERS*	X	
13128	ELECTRIC OPERATOR		X
13207	FIBERGLASS REINFORCED PLASTIC ABOVE GROUND STORAGE TANKS		X
13300	PRE-ENGINEERED BUILDING		X
13445	PNEUMATIC CONTROLLERS AND CONTROL VALVES	X	
13466	FLOOR SCALE AND INSTRUMENTS		X
13447	ELECTRIC MOTOR ACTUATORS	X	X
13930	WET PIPE FIRE EXTINGUISHING SYSTEM		X

Specification Section	Specification Title	GMP 1	GMP 2
DIVISION 14 - HOISTING AND CONVEYING SYSTEMS			
14630	HOISTS, TROLLEYS, MONORAILS		X
DIVISION 15 - MECHANICAL			
15010	BASIC MECHANICAL REQUIREMENTS		X
15030	CLEANING MECHANICAL SYSTEMS		X
15050	PIPING SYSTEMS		X
15051	BURIED PIPING INSTALLATION		X
15052	EXPOSED PIPING INSTALLATION		X
15061	DUCTILE IRON PIPE		X
15062	STEEL PIPE	X	
15064	COPPER PIPE		X
15065	THERMOPLASTIC PIPE AND ACCESSORIES		X
15066	STAINLESS STEEL PIPE		X
15104	CONCRETE PIPE		X
15120	PIPING SPECIALTIES AND ACCESSORIES		X
15140	SUPPORTS AND ANCHORS		X
15260	PIPING INSULATION		X
15290	DUCT WORK INSULATION		X
15400	PLUMBING FIXTURES AND EQUIPMENT		X
15410	PLUMBING PIPING		X
15430	PLUMBING SPECIALITIES		X
15440	PLUMBING FIXTURES		X
15450	PLUMBING EQUIPMENT		X
15680	EVAPORATIVE COOLERS		X
15781	AIR CONDITIONING UNIT		X
15885	AIR CLEANING		X
15890	DUCT WORK		X
15910	DUCT WORK ACCESSORIES		X
15936	AIR OUTLETS AND INLETS		X
15982	LINE VOLTAGE THERMOSTAT		X
15990	TESTING, ADJUSTING, AND BALANCING		X
DIVISION 16 - ELECTRICAL			
16000	GENERAL ELECTRICAL REQUIREMENTS		X
16001	PACKAGED SYSTEMS AND PACKAGED CONTROL PANELS		X
16010	ELECTRICAL: BASIC REQUIREMENTS		X
16050	BASIC MATERIALS AND METHODS		X

Specification Section	Specification Title	GMP 1	GMP 2
DIVISION 16 – ELECTRICAL (CONT'D)			
16060	ELECTRICAL DEMOLITION		X
16062	LIGHTNING PROTECTION		X
16111	CONDUITS		X
16117	CONCRETE MANHOLES, HANDHOLES AND PULL BOXES		X
16123	600 VOLT CLASS CABLE		X
16124	INSTRUMENTATION CLASS CABLE		X
16130	OUTLET, PULL, AND JUNCTION BOXES		X
16137	UNDERGROUND DUCT BANKS*		X
16141	WIRING DEVICES		X
16142	WEATHERPROOF WHILE IN USE OUTLET ENCLOSURES		X
16143	TERMINAL BLOCKS		X
16160	ENCLOSURES	X	X
16161	CONTROL PANELS	X	X
16170	GROUNDING AND BONDING		X
16190	SUPPORTING DEVICES		X
16195	ELECTRICAL IDENTIFICATION		X
16225	ELECTRIC MOTORS		X
16282	SURGE PROTECTIVE DEVICE		X
16305	5KV CLASS CABLE		X
16321	OIL FILLED SUBSTATION TRANSFORMERS		X
16341	MEDIUM VOLTAGE LOAD INTERRUPTER SWITCHGEAR		X
16430	CUSTOMER POWER METERING SYSTEM		X
16432	SERVICE ENTRANCE SECTION		X
16440	DISCONNECT SWITCHES		X
16461	TRANSFORMERS - DRY TYPE		X
16470	PANELBOARDS		X
16474	MOTOR CONTROL EQUIPMENT (SEPARATELY MOUNTED)		X
16477	600 V FUSES		X
16481	MOTOR CONTROL CENTERS (MCC)	X	X
16482	SOLID STATE MOTOR CONTROLLERS		X
16485	VARIABLE FREQUENCY DRIVES – LOW VOLTAGE	X	X
16494	MANUAL TRANSFER SWITCH		X
16500	LIGHTING		X
16611	STATIC UNINTERRUPTIBLE POWER SUPPLY		X

Specification Section	Specification Title	GMP 1	GMP 2
DIVISION 16 – ELECTRICAL (CONT'D)			
16720	FIRE SURVEILLANCE AND ALARM SYSTEM		X
16912	ETHERNET NETWORK EQUIPMENT		X
16913	SINGLE MODE FIBER OPTIC CABLING		X
16920	ELECTRICAL ACCEPTANCE TESTING		X
16951	SHORT CIRCUIT, COORDINATION AND ARC FLASH HAZARD REPORT		X
DIVISION 17 - INSTRUMENTATION			
17000	INSTRUMENTATION		X
17111	FLOAT SWITCHES		X
17120	PRESSURE TRANSMITTERS		X
17121	PRESSURE SWITCHES AND GAUGES		X
17122	LEVEL TRANSMITTERS – PRESSURE TYPE		X
17124	SUBMERSIBLE LEVEL TRANSMITTER		X
17125	RADAR LEVEL TRANSMITTER		X
17134	FLOW SWITCHES		X
17137	MAGNETIC FLOW METERS	X	X
17138	INSERTION MASS FLOW METERS		X
17150	LIMIT AND POSITION SWITCHES		X
17221	ELECTRONIC 4 –20 MA INDICATORS		X
17222	SIGNAL CONDITIONERS		X
17325	TURBIDITY AND TSS ANALYZER		X
17420	pH/ORP SENSORS AND ANALYZERS		X
17421	CHLORINE RESIDUAL ANALYZER		X
17451	AB PLC SYSTEM HARDWARE CONTROLLOGIX	X	X
17452	AB SYSTEMS SOFTWARE AND ACCESSORIES	X	X
17454	OPERATIONS AND CONTROL DESCRIPTIONS		X
17455	AB OPERATOR INTERFACE TERMINAL SOFTWARE AND HARDWARE	X	X
17456	PROGRAMMING GENERAL		X
17458	MODICON UNITY PLC SYSTEM SOFTWARE AND ACCESSORIES		X
17461	MODICON M340 PROGRAMMABLE LOGIC CONTROLLER SYSTEM (M340)		X
17462	MODICON UNITY PLC SYSTEM SOFTWARE AND ACCESSORIES		X
* Indicates a Package Specification, which was updated in the Addendum No. 1, Dated February 28, 2022 and differs from GMP 1 Pre-Procurement Package Specifications dated August 2021.			

++ END OF TABLE OF CONTENTS ++

SECTION 01010

SUMMARY OF WORK

PART 1 - GENERAL

1.1 SUMMARY

A. The Work to be accomplished under these Contract Documents consists of furnishing all labor, materials, and equipment for all project scope items of the Reclaimed Water Interconnect Facility located at the Chandler Airport WRF.

B. The CONTRACTOR shall be responsible for site and personnel safety during all phases and all aspects of construction.

C. The Work includes, but is not limited to, the following principal unit processes and structures:
   1. Raw Water Pump Station:
      a. Construction of wet well.
      b. Installation of pumps, piping, and incidental electrical work.
      c. Complete all necessary Site Work.
      d. Connection of all electrical and mechanical services.
   2. Self-Cleaning Strainers:
      a. Installation of self-cleaning strainers, backwash assist pumps, piping, and incidental electrical work.
      b. Complete all necessary Site Work.
      c. Connection of all electrical and mechanical services.
   3. Membrane Filtration System:
      a. Construction of membrane trains, inlet channel, and CIP tank.
      b. Installation of membrane equipment, pumps, piping, Backpulse Tank, and incidental electrical work.
      c. Installation of bridge crane hoist system.
      d. Installation of inline, rapid mixer.
      e. Connection of all electrical and mechanical services.
      f. Complete all necessary Site Work.
   4. Membrane Filtration System Blower Building:
      a. Installation of pre-fabricated blower building.
      b. Installation of blowers, air compressors, air dryers, piping, and incidental electrical work.
      c. Complete all necessary Site Work.
   5. Membrane Filtration System Chemical Facility:
      a. Construction of the chemical feed and storage facility.
      b. Installation of FRP tank, chemical metering pumps, piping, chemical trench, and incidental electrical work
      c. Complete all necessary Site Work.
   6. ACH Chemical Facility:

a. Construction of the chemical feed and storage facility.
b. Installation of chemical metering pumps, piping, chemical trench, and incidental electrical work
c. Complete all necessary Site Work.

7. Membrane Filtration System Electrical Building:
   a. Installation of pre-fabricated electrical building.
   b. Installation of RWIF MCCs, VFDs, and Control.
8. Ancillary Electrical and Instrumentation work as indicated in the Contract Documents.
9. Ancillary yard piping and site work as indicated in the Contract Documents.
10. Upgrades to AWRF Distributed Control System to receive signals from RWIF.
11. All notifications to governmental and public agencies.
12. Applications for and securing of all permits.
13. Prepare as-built Contract Documents to accurately reflect the final state of construction.
14. Prepare and maintain Construction Schedules.
15. Provide one year warranty on all warranted materials and labor.
    a. Provide one year warranty on start-up assistance.
16. Provide on-site, hands-on operator training.
17. All other miscellaneous work as specified in the Contract Documents.

1.2 ACCESS TO AND FROM THE SITE

A. The address for the Chandler Airport WRF is 905 East Queen Creek Road.
   1. The CONTRACTOR'S personnel shall ingress and egress the site utilizing the existing west entrance to the site.

1.3 DESCRIPTION OF SITE

A. The Airport WRF site is located southwest of the Chandler Airport. The property is bounded by Queen Creek Road on the north, McQueen Road on the east, and Appleby Road (a dirt road) on the south. The Consolidated Canal passes through the southeast corner of the property. The RWIF will be located within the Airport WRF site. An easement to the Raw Water Pump Station at the Consolidated Canal will be provided to Salt River Project.

1.4 PROXIMITY TO CHANDLER MUNICIPAL AIRPORT

A. The proximity of the RWIF site to the Chandler Municipal Airport, as a minimum, can create the following concerns:
   1. Aircraft noise levels.
   2. Obstructions to air navigation.
   3. Radio Telemetry Interference.
   4. Bird strike hazards to aircraft.

B. Obstructions to Air Navigation:

1. Part 77 of the Federal Aviation Regulations (FAR) relates to potential obstructions to air navigation. Due to this Project's proximity to an airport, the FAR requires that a Notice of Proposed Construction be filed with the Federal Aviation Administration (FAA) for this Project. The FAA may require obstruction marking or lighting on construction equipment or may limit the height of construction equipment that can be used on this site.
2. The CONTRACTOR shall be responsible for notifying the appropriate agencies, obtaining all required permits, and complying with applicable regulations.

C. Radio Telemetry Interference:
1. The CONTRACTOR shall be responsible for coordination of construction site communications to prevent interference with aircraft communications and navigation.

D. Bird Strike Hazards to Aircraft:
1. There is a potential for serious damage to an aircraft if the aircraft strikes a bird. The potential for bird strikes is increased by open bodies of water, refuse piles, or other activities which may attract birds.
2. The CONTRACTOR shall be responsible for mitigation of all such activities associated with the Project.

E. The CONTRACTOR shall be responsible for public safety related to all Work at the WRF site.

F. CONTRACTOR shall provide copies of all documentation/correspondence referenced in this section to the ENGINEER for reference.

1.5 PROXIMITY TO CHANDLER MUNICIPAL TRANSFER STATION

A. The City of Chandler Municipal Transfer Station is located adjacent to the Airport WRF. Construction activities shall not interfere with operation of the transfer station.

B. City of Chandler Solid Waste Management Department utilizes the northwest portion of the site for storage and as a work yard. Construction activities shall not hinder normal operations.

PART 2 - PRODUCTS (NOT USED)

PART 3 - EXECUTION (NOT USED)

++ END OF SECTION ++

SECTION 01012

PLANT OPERATION DURING CONSTRUCTION

PART 1 - GENERAL

1.1 SUMMARY

A. The CONTRACTOR will be performing Work at an operating wastewater treatment plant site. As a result, the CONTRACTOR shall take all precautions necessary to ensure that the treated effluent quality and quantity are not impacted. These precautions include but are not limited to protecting piping, utilities, roads, and structures that are to remain and are not to be modified or replaced. Any temporary facilities required to achieve minimum level of treatment and capacity shall be provided by the CONTRACTOR at his own expense. Upon completion of the Work, all temporary facilities and materials shall be removed from the site.

B. All Work shall be completed in a manner which will result in minimum disruption to the operation of the existing facilities.

C. The CONTRACTOR shall not operate any equipment, valves, etc. that will affect the treatment process. CONTRACTOR shall coordinate any required modifications to the treatment process with the ENGINEER and OWNER. The CONTRACTOR shall witness and assist with all startups following any of the CONTRACTOR'S Work in the respective area to ensure proper operation of the modified or rehabilitated process.

D. CONTRACTOR'S means and methods shall be implemented such that the existing plant shall remain in continuous satisfactory operation during the entire construction period. Only shutdowns listed in this Specification Section will be allowed. Work shall be scheduled and conducted by the CONTRACTOR such that it shall not impede any treatment process, create potential hazards to operating equipment and OWNER'S personnel, reduce the quality of the plant effluent or cause odor or other nuisances. In performing the Work shown and specified, CONTRACTOR shall plan and schedule the Work to meet both the constraints outlined in this Section and plant operating requirements.

E. CONTRACTOR has the option of providing additional temporary facilities that can eliminate a constraint provided it is done without additional cost to the OWNER, presents no safety hazards, and provided that all requirements of these specifications are fulfilled. CONTRACTOR shall obtain ENGINEER'S approval prior to installing temporary facilities. Temporary facilities shall have same amount of reliability, redundancy, and automation currently available.

F. CONTRACTOR is responsible for coordinating all shutdowns with the ENGINEER. CONTRACTOR shall whenever possible, combine discrete

shutdown procedures into a single shutdown when the duration of the shutdowns or the Work requirements allow. The intent of combining procedures is to minimize the impacts upon plant operations and processes by limiting the number of shutdowns required.

G. CONTRACTOR shall not shut off or disconnect any operating system. All plant equipment operation and shutdowns shall be executed by the OWNER, unless otherwise noted.

H. CONTRACTOR shall be responsible for supplying all temporary pipelines, valves, pumps, meters, spare parts, temporary electrical power and controls, and any other appurtenances required for the installation and operation of temporary bypass lines, pumping systems, blowers, or conveyance systems required to maintain operations of the plant during construction activities. All temporary facilities shall be tested prior to taking an existing system offline. CONTRACTOR shall submit to the ENGINEER for review and approval, the design of all temporary lines, conveyance systems, proposed temporary equipment, etc., at least 30 days prior to planned commencement of the Work. Equipment performance information shall be included with the submittal.

I. Unless otherwise specified, the CONTRACTOR shall dewater the process basin that is taken offline at the beginning of each shutdown. The CONTRACTOR shall be responsible for washing down, dewatering and cleaning all basins. It is the responsibility of the CONTRACTOR to remove all washdown, cleaning and storm water that accumulates in the Work areas. CONTRACTOR shall be responsible for removing this material and disposing of it onsite as directed by the ENGINEER, into one of the treatment processes.

J. Non-Potable Water System, Potable Water System and the sampling system are to be protected at all times and must remain in service to all operating facilities.

K. The biological nutrient removal (BNR) process, fine screens, pre-stage basins, grit removal system, aeration basins, secondary clarifiers, filters, reclaimed water pump station, sludge holding tanks, odor control, thickening building, chlorine contact basin, wash water equalization basins, bio-filters, scum-pump stations, chemical facilities and dewatering belt presses and related electrical equipment and appurtenances existing at Airport WRF may not be removed from service. The unit processes that are planned to be removed from service are outlined later in the specification.

L. Paving operations shall not commence as deemed necessary for overall completion by agreement between the ENGINEER and CONTRACTOR.

M. Electrical Distribution, Instrumentation and Communication System: The site-wide electrical distribution, instrumentation and communication system shall be operational during this Project. Any shutdowns related to electrical connections shall be coordinated with the plant shutdown schedule. Temporary electrical

conduits and communication conduits, wiring and temporary setup may be required if longer periods of outages are necessary.

N. Extensive coordination is required for the Work to be conducted in and around the facility. CONTRACTOR shall refer to Specification Section 01310, Progress Schedule, for further information regarding sequencing of construction.

O. OWNER'S personnel must have access and be able to perform normal operational duties at all times during construction. OWNER'S personnel must have operational access to all equipment at all times.

P. The CONTRACTOR shall note that the WRF will be treating wastewater at all times during the construction of the Project. Gases such as H2S will be present in the atmosphere in and around numerous processes. CONTRACTOR shall plan Work accordingly.

1.2 GENERAL CONSTRAINTS

A. The following Sections describe the proposed shutdown schedule, where applicable, for plant systems which are to be taken out of service. The operational status of new or existing systems other than the designated systems shall not be interrupted by the CONTRACTOR during the specified time period. New systems may only be used after the specified testing is completed and the systems are accepted for use by the ENGINEER, in writing.

B. The following constraints shall be applied to all equipment and appurtenant utility systems at the plant site.
   1. Access to Work Site: The CONTRACTOR shall access the Work site using the west most access to the facility on Queen Creek Road. An unobstructed traffic route through the plant gate shall be maintained at all times.
   2. Load Limits on Access Roads: Existing and new underground facilities, such as electrical duct banks, pipelines, etc., in, under and crossing plant roads, have been designed for maximum wheel load of H-20. CONTRACTOR shall not exceed this weight limit and shall provide means of protecting the underground facilities and at grade manhole / handhole covers.
   3. Safety Barriers: CONTRACTOR shall place safety barriers around unsafe areas located around operational areas accessible to OWNER'S personnel.
   4. Personnel Access: WRF personnel shall have access to all areas which remain in operation throughout the construction period.
   5. Potable and Non-Potable Water System: The existing potable and non-potable water system shall be kept in operation at all times, unless otherwise specified.
   6. Plumbing Facilities: Plumbing facilities shall be kept in operation at all times, unless otherwise specified. All other plumbing systems, such as roof and floor drains, pumping, etc., shall be maintained for all structures.
   7. Storm Drainage: Storm drainage on the site shall be operational at all times, unless otherwise specified.

8. Seal and Service Water Piping: A supply of service and seal water and the necessary connections to existing equipment shall be maintained during construction. In the event of damage to existing supply during construction, the CONTRACTOR shall repair and provide temporary piping during repair at no additional cost to the OWNER.
9. Draining Process Pipes and Conduits:
    a. Unless otherwise specified, the contents of existing Airport WRF pipes and conduits undergoing modifications shall be transferred to the Airport WRF Influent Pump Station using hoses, piping, pumps, or other applicable means. Treatment chemicals, including, but not limited to, polymer, alum, sodium hypochlorite, sodium hydroxide, sodium bisulfite, sulfuric acid, citric acid, and cleaning acids, shall be disposed of by the CONTRACTOR in an off-site location, in accordance with all local, State, and Federal regulations.
    b. If a drain is not available on the pipe to be drained, then a wet tap shall be made by CONTRACTOR using a tapping saddle and valve approved by the ENGINEER. No uncontrolled spillage of a pipe's contents shall be allowed.
    c. Any spillage shall be brought to the ENGINEER'S attention immediately in writing. CONTRACTOR shall wash down any spillage to floor drains, sumps and sump pump discharge piping and then flush out the system to prevent clogging and septic odors. If spillage is not suitable for drainage system, e.g., chemical spills, etc., as determined by the ENGINEER, CONTRACTOR shall remove spillage by other method such as Vactor truck, as approved by the ENGINEER.
10. Temporary Partitions and Enclosures: CONTRACTOR shall provide temporary partitions and enclosures necessary to maintain dust-free, heated, cooled, and ventilated spaces in all areas which are adjacent to his Work and which must be kept operational.
11. Dead End Valves or Pipe: CONTRACTOR shall provide blind flanges or plugs on all valves or pipes which dead-end a line on a temporary or permanent basis. Blind flanges and plugs shall be restrained.
12. Power, Light, and Communication Systems: Electrical power, lighting service and communication systems shall be maintained in uninterrupted operation in all areas.
13. Prior to the usage of all new unit process equipment, the CONTRACTOR shall conduct start up and testing (per Section 01650, Starting of Systems) for the equipment prior to handing the operation of the equipment over to the OWNER. The CONTRACTOR shall also schedule training of the equipment with manufacturer's representatives prior to OWNER'S personnel taking over operational responsibility.
14. Tie-ins and shutdowns at the WRF may need to be performed after hours or on weekends to facilitate normal operation of the WRF. No additional compensation will be made for Work that may be needed during after hours or on weekends. This Work must be coordinated and approved by the ENGINEER.

1.3 SHUTDOWNS

A. General:

1. A shutdown shall be defined as a portion of the normal operation of the Airport WRF unit that has to be suspended or taken out of service in order to perform the specified Work. For each shutdown, CONTRACTOR shall prepare a list of labor, materials, and equipment needed to perform tasks, an estimate of the time required, and a written description of steps required to complete all tasks. The list, the estimate, and written procedures shall be submitted to the ENGINEER for review 30 calendar days prior to the proposed start date of the shutdown. CONTRACTOR shall also request in writing from the ENGINEER, approval for each shutdown a minimum of 14 calendar days prior to the proposed shutdown date. No shutdown shall be initiated until the list of materials and labor is verified by the ENGINEER on site at least one week prior to the proposed start date. One meeting shall be held per shutdown after ENGINEER'S review of the information on written procedures and at least three weeks prior to proposed shutdown. A second meeting shall be held for verification of list of materials and labor.
2. The Work required herein and any other Work required by the CONTRACTOR and approved by the ENGINEER may interrupt normal plant operations and shall be accomplished at such times that will be convenient to the OWNER.
3. CONTRACTOR shall have on hand and located in close proximity to the Work area all tools, equipment, spare parts and materials, both temporary and permanent, necessary to complete each Work category without interruption. An adequate number of personnel shall be scheduled for each shutdown, so that Work shall be accomplished within the specified time frame. Prefabrication of all piping and other assemblies shall be completed, to the greatest degree possible, prior to any shutdowns. The ENGINEER shall be satisfied that the CONTRACTOR has complied with these requirements, to the fullest extent possible, before shutdowns will be authorized.
4. If CONTRACTOR'S procedures cause an unscheduled shutdown of the facilities, CONTRACTOR shall perform Work as necessary to immediately reestablish satisfactory operation. CONTRACTOR shall notify the ENGINEER, in writing, immediately of an unscheduled shutdown. Unscheduled shutdowns and/or interruptions of facility operations that result in fines levied by the Arizona Department of Environmental Quality, or Maricopa County shall be the responsibility of the CONTRACTOR.
5. Scheduled shutdowns during the period of the CONTRACTOR'S Work will be as shown in Section 1.5 of this Specification. All Work requiring the WRF to be out of service shall be performed during the scheduled shutdowns identified below. It should be noted that the OWNER'S personnel shall continue to perform administrative, operational, and maintenance functions during shutdowns.
6. Shutdown of Electrical Systems: CONTRACTOR shall lock out and tag circuit breakers and switches operated by the OWNER and check cables and

wires to be sure that they are de-energized to ground potential before Work begins. Upon completion of the Work, CONTRACTOR shall remove the locks and tags and notify the ENGINEER that the facilities are available for use.

7. Electrical Duct Bank Installation: Shutdown and relocation of conflicting utilities alignments with electrical duct bank will only be allowed for certain types of process pipelines. Any shutdown and relocations shall follow a strict time schedule in order to minimize impact to plant operations.
8. When temporary generators or fiber optic conduits are used, the CONTRACTOR shall provide temporary instrumentation wiring to operate temporary equipment to keep the WRF in operation. The instrumentation wiring and temporary equipment operation logic shall be submitted to and approved by the ENGINEER.

1.4 RELATED SECTIONS

A. Section 01010, Summary of Work.

B. Section 01310, Progress Schedule.

1.5 WRF TREATMENT REQUIREMENTS/LIST OF PROCESS SHUTDOWNS

A. WRF treatment requirements vary throughout the year. The WRF's maximum monthly treatment capacity is 27 MGD (million gallons per day). Hydraulic peak flows reaching 33 MGD shall be accommodated throughout construction. There shall be no disruption to the normal operation of the Airport WRF during the entire duration of construction of RWIF.

B. The table at the end of this specification includes (but is not limited to) a list of procedures for all connections to existing infrastructure and utilities (NPW, PW, sewer, electrical, structures, mechanical piping, etc.)

1.6

1.6 OTHER PROCESS SHUTDOWNS

A. Previous sections covered planned shutdowns processes at the WRF that run continuously. Several modifications may be required to other processes and ancillary facilities at the WRF. Work within these areas shall be coordinated with the ENGINEER. CONTRACTOR shall follow all procedures outlined in Paragraphs 1.1, 1.2, and 1.3 of this Specification for Work within these areas.

B. The above listed process areas/ancillary facilities could be shutdown up to a maximum period of four hours with prior notice. CONTRACTOR shall coordinate and obtain the approval from the ENGINEER regarding shutdown of the above listed processes.

1.7 SEQUENCING OF WORK

A. General:
   1. The CONTRACTOR is responsible for identifying all other critical sequencing items and is also responsible for scheduling the Work.
   2. The ENGINEER will review proposals from the CONTRACTOR regarding sequencing of work. Approval of sequencing proposals is at the discretion of the ENGINEER.

PART 2 - PRODUCTS (NOT USED)

PART 3 - EXECUTION (NOT USED)

ITEM NO.	ITEM DESCRIPTION	PROCESS UNITS OPERATING PRIOR TO SHUTDOWN	PROCESS UNITS OPERATING DURING SHUTDOWN	PROCESS UNITS AFFECTED DURING SERVICE	IMPACT ON OTHER PROCESS UNITS	PROCEDURE	CONSTRAINTS AND REMARKS	DURATION OF SHUTDOWN
1	Connection of 24-inch Membrane Drain Pipe to new sewer manhole No. 64.	All processes	All processes	Plant Sewer	NA	Contractor shall: Install all piping and accessories required to connect line from Membrane Inlet Channel to new Sewer Manhole No. 64. The manhole will be cast over existing 30-inch RCP sanitary sewer line. Coordinate with Plant Staff and Engineer. Coordinate with Plant Staff and Engineer. Contractor shall submit written procedure for review and approval prior to installation.	None	TBD
2	Connection of 12-inch Membrane CIP Drain Pipe to existing sewer manhole No. 8.	All processes	All processes	Plant Sewer	NA	Contractor shall: Install all piping and accessories required to connect line from proposed CIP Tank to existing Sewer Manhole No. 8. Coordinate with Plant Staff and Engineer. Coordinate with Plant Staff and Engineer. Contractor shall submit written procedure for review and approval prior to installation.	None	TBD

ITEM NO.	ITEM DESCRIPTION	PROCESS UNITS OPERATING PRIOR TO SHUTDOWN	PROCESS UNITS OPERATING DURING SHUTDOWN	PROCESS UNITS AFFECTED DURING SERVICE	IMPACT ON OTHER PROCESS UNITS	PROCEDURE	CONSTRAINTS AND REMARKS	DURATION OF SHUTDOWN
3	Connection of Secondary Clarifier 1, 2, and 3 2-inch common drain pipe to new sewer manhole No. 64	All processes	All processes	AWRF Secondary Clarifiers 1, 2, and 3 Plant Sewer	NA	Contractor shall: Install all piping and accessories required to connect line from existing Clarifier 1, 2, and 3 drain pipe manifold to new Sewer Manhole No. 64. This includes the 2-inch PVC Drain Pipe from the proposed Blower Building. Coordinate with Plant Staff and Engineer. Coordinate with Plant Staff and Engineer. Contractor shall submit written procedure for review and approval prior to installation.	None	TBD
4	Connection to potable water pipes from the MFS Chemical Facility	All processes	All processes	POT near AWRF Secondary Clarifiers	NA	Contractor shall: Install all piping and accessories required to connect lines to existing 2-inch copper potable water line near the proposed Chemical Facilities. Coordinate with Plant Staff and Engineer. Contractor shall submit written procedure for review and	None	TBD

ITEM NO.	ITEM DESCRIPTION	PROCESS UNITS OPERATING PRIOR TO SHUTDOWN	PROCESS UNITS OPERATING DURING SHUTDOWN	PROCESS UNITS AFFECTED DURING SERVICE	IMPACT ON OTHER PROCESS UNITS	PROCEDURE	CONSTRAINTS AND REMARKS	DURATION OF SHUTDOWN
						approval prior to installation.		
5	Connection to potable water pipes from the ACH Chemical Facility	All processes	All processes	POT near AWRF Secondary Clarifiers	NA	Contractor shall: Install all piping and accessories required to connect lines to existing 8-inch DIP potable water line between Secondary Clarifiers 3 and 8, to route to the proposed ACH Facility. Coordinate with Plant Staff and Engineer. Contractor shall submit written procedure for review and approval prior to installation.	None	TBD
6	Connection to potable water pipes from the Blower Building	All processes	All processes	POT near AWRF Secondary Clarifiers	NA	Contractor shall: Install all piping and accessories, including backflow preventer, required to connect lines to existing 8-inch DIP potable water line south of the existing Maintenance Building, to route to the proposed Blower Building. Coordinate with Plant Staff and Engineer. Contractor shall submit written procedure for	None	TBD

ITEM NO.	ITEM DESCRIPTION	PROCESS UNITS OPERATING PRIOR TO SHUTDOWN	PROCESS UNITS OPERATING DURING SHUTDOWN	PROCESS UNITS AFFECTED DURING SERVICE	IMPACT ON OTHER PROCESS UNITS	PROCEDURE	CONSTRAINTS AND REMARKS	DURATION OF SHUTDOWN
						review and approval prior to installation.		
7	Connection of the Self-Cleaning Strainers 6-inch backwash drain pipe to new sewer manhole No. 63.	All processes	All processes	Plant Sewer	NA	Contractor shall: Install all piping and accessories required to connect line from Self-Cleaning Strainers to new Sewer Manhole No. 63. The manhole will be cast over existing 30-inch RCP sanitary sewer line. Coordinate with Plant Staff and Engineer. Coordinate with Plant Staff and Engineer. Contractor shall submit written procedure for review and approval prior to installation.	None	TBD
8	Connection of two RWIF sodium hypochlorite diaphragm metering pumps for disinfection to the existing Bulk Sodium Hypochlorite Facility	All processes	All processes	Bulk Sodium Hypochlorite Facility	NA	Contractor shall: Turn ball valve upstream of 3-inch CPVC cap for future connection to "closed" position, northeast of existing Sodium Hypochlorite Storage Tanks. Install all piping and accessories required to connect lines to existing 3-inch CPVC Sodium Hypochlorite line, to connect to the	None	TBD

ITEM NO.	ITEM DESCRIPTION	PROCESS UNITS OPERATING PRIOR TO SHUTDOWN	PROCESS UNITS OPERATING DURING SHUTDOWN	PROCESS UNITS AFFECTED DURING SERVICE	IMPACT ON OTHER PROCESS UNITS	PROCEDURE	CONSTRAINTS AND REMARKS	DURATION OF SHUTDOWN
						proposed metering pumps. Coordinate with Plant Staff and Engineer. Contractor shall submit written procedure for review and approval prior to installation.		
9	Construction of effluent weir wall in Chlorine Contact Basin No. 1, and Connection of RWIF Membrane 24-inch permeate pipe through access hatch in effluent channel.	All Processes	All Processes	AWRF Chlorine Contact Basins	NA	Contractor shall: Install stop plates on South of CCB No. 2 on the common inlet channel, and common outlet channels, to isolate CCB No. 1. Install all formwork and reinforcing necessary to pour concrete on top of existing weir wall to form to the bottom of the top slab. Install all piping and accessories required to route 24-inch DIP through access hatch on effluent channel near CCB No. 1. Coordinate with Plant Staff and Engineer. Contractor shall submit written procedure for review and approval prior to installation.	TBD	TBD
10	Installation of proposed	All Processes	All Processes	AWRF	NA	Contractor shall: Install	TBD	TBD

ITEM NO.	ITEM DESCRIPTION	PROCESS UNITS OPERATING PRIOR TO SHUTDOWN	PROCESS UNITS OPERATING DURING SHUTDOWN	PROCESS UNITS AFFECTED DURING SERVICE	IMPACT ON OTHER PROCESS UNITS	PROCEDURE	CONSTRAINTS AND REMARKS	DURATION OF SHUTDOWN
	AWRF & RWIF Blended compliance sample stilling well, and relocation of AWRF Compliance Sample stilling well			Chlorine Contact Basins		stop plates centered on CCB No. 2 effluent channels, to direct flow through Southern 54-inch CCP Effluent. Contractor shall install stop plates South of CCB No. 3 on the common inlet channel to isolate CCB No. 3. Install all piping and accessories required for stilling wells, sample pumps, and composite sampler as shown on Contract Drawings for the AWRF and Blended AWRF/RWIF Compliance Sampling Points. Coordinate with Plant Staff and Engineer. Contractor shall submit written procedure for review and approval prior to installation.		
11	Electrical – Aeration Blower Building MCC-BL1 Modifications	All Processes	All Processes except Aeration Basins & other MCC-BL1 loads	Aeration Blowers	Aeration Basins	1. Determine critical loads fed by MCCs downstream of MCC-BL1 and ensure temporary power. 2. Power down one-half of MCC-BL1 at a time	TBD	TBD

ITEM NO.	ITEM DESCRIPTION	PROCESS UNITS OPERATING PRIOR TO SHUTDOWN	PROCESS UNITS OPERATING DURING SHUTDOWN	PROCESS UNITS AFFECTED DURING SERVICE	IMPACT ON OTHER PROCESS UNITS	PROCEDURE	CONSTRAINTS AND REMARKS	DURATION OF SHUTDOWN
						to allow operation of half of site Aeration Blowers. 3. Ensure proper LOTO procedures for MCC-BL1 main breakers. 4. Install new MCC sections, conduits and feeder cables. 5. Complete Electrical inspections and testing of newly installed equipment. 6. LOTO the new MCC-BL1 sections. 7. Re-energize MCC-BL1 and downstream equipment per Owner's instructions. Contractor shall submit written procedure for review and approval prior to installation.		
12	Electrical – New RWIF Electrical Building Switchgear	All Processes	All Processes	None	None	TBD	TBD	TBD
13	Electrical – New RWPS Switchgear	All Processes	All Processes	None	None	TBD	TBD	TBD
14	Electrical - Relocation of chlorine analyzer sample pump, sample pump control panel, composite	All Processes	All Processes	AWRF Chlorine Contact Basins	None	TBD	TBD	TBD

ITEM NO.	ITEM DESCRIPTION	PROCESS UNITS OPERATING PRIOR TO SHUTDOWN	PROCESS UNITS OPERATING DURING SHUTDOWN	PROCESS UNITS AFFECTED DURING SERVICE	IMPACT ON OTHER PROCESS UNITS	PROCEDURE	CONSTRAINTS AND REMARKS	DURATION OF SHUTDOWN
	sampler and addition of new sample pump located at AWRF Chlorine Contact Basin effluent channel.							
15	Electrical – Installation of new fiber optic cables to Admin building control room network switch	All Processes	All Processes	None	None	TBD	TBD	TBD

++ END OF SECTION ++

SECTION 01013

ENGINEERING SERVICES

PART 1 - GENERAL

1.1 SUMMARY

A. The Work to be accomplished under these Contract Documents has been designed for the OWNER by a registered Professional Engineer retained by the OWNER for this purpose. It is understood that normal engineering for the purpose of interpretation of the Contract Documents is provided by the OWNER. Should any services of the ENGINEER be required to assist in the corrections of errors or omissions in construction by the CONTRACTOR, or services of the ENGINEER be required because of changes in structure or equipment where the CONTRACTOR has requested approval of substitute methods or materials, those services will be provided by the ENGINEER at the standard hourly rates previously negotiated with the OWNER and shall be paid for by the CONTRACTOR. Other services shall be described further in this Section.

PART 2 - PRODUCTS (NOT USED)

PART 3 - EXECUTION

3.1 ENGINEERING SERVICES

A. The ENGINEER shall be reimbursed by the CONTRACTOR for the ENGINEER'S additional services to the Project through no fault of the OWNER or ENGINEER including, but not limited to, the following conditions:
   1. Additional Shop Drawing review(s) by the ENGINEER as described in Section 01300, Submittals.
   2. Additional site visits, investigations, inspections, design work, and/or reports by the ENGINEER which are required due to damages to existing facilities or completed Work caused by the CONTRACTOR in his performance, the CONTRACTOR'S negligence, or the CONTRACTOR'S Work which is rejected as defective or as failing to conform to the Contract Documents.
   3. All retesting required due to the failure of the CONTRACTOR'S Work to meet the requirements of the Contract Documents shall be at the CONTRACTOR'S expense. All standby and travel time by the OWNER'S testing lab or ENGINEER due to CONTRACTOR'S inability to be prepared for testing at the agreed upon time or inability of CONTRACTOR to meet performance requirements shall be at the CONTRACTOR'S expense. An hourly rate of three times the direct labor cost, but not less than $125/hour, will be charged to the

CONTRACTOR for every hour of engineering or testing lab personnel time, plus the cost of any retesting on a per test basis.

B. The ENGINEER shall bill the OWNER for additional Engineering Services performed as described in these Documents. The OWNER shall withhold payment for this from the CONTRACTOR'S final payment. A change order shall be executed deleting the amount due from the Contract sum and final payment.

++ END OF SECTION ++

SECTION 01040

COORDINATION

PART 1 - GENERAL

1.1 SUMMARY

A. The CONTRACTOR will be required to coordinate his activities with the pertinent utilities, the OWNER'S staff, subcontractors, and equipment suppliers in order not to delay the CONTRACTOR'S Project schedule and to minimize the disruption to plant operation throughout the construction period.

1.2 RELATED SECTIONS

A. Section 01300, Submittals.

1.3 SEQUENCING AND SCHEDULING

A. CONTRACTOR shall submit to the ENGINEER and OWNER a construction schedule in accordance with Section 01310, Progress Schedule.

B. The CONTRACTOR shall be responsible for coordinating in a timely manner with pertinent utility companies to avoid conflicts with their facilities.

C. The CONTRACTOR shall receive approval of the construction schedule prior to commencement of the Work.

D. The CONTRACTOR shall be responsible for coordinating the Work among all subcontractors as necessary.

E. The CONTRACTOR shall be responsible for all construction coordination necessary so that the Project may remain on schedule.

F. The CONTRACTOR shall coordinate the following with the OWNER and the ENGINEER.
   1. Testing.
   2. Inspections.
   3. Starting of Systems.
   4. Operations and Maintenance Training.

PART 2 - PRODUCTS (Not Used)

PART 3 - EXECUTION (Not Used)

++ END OF SECTION ++

SECTION 01050

FIELD ENGINEERING/SURVEYING

PART 1 - GENERAL

1.1 SUMMARY

A. The CONTRACTOR shall hire a surveyor licensed in the State of Arizona to perform all surveying responsibilities. It is also the CONTRACTOR'S responsibility to notify the ENGINEER, in writing, of any discrepancy found between the topographic survey provided and the baseline conditions provided in the Contract Documents within 14 days of the Notice to Proceed. The CONTRACTOR further takes the responsibility to correct any discrepancies not reported to the ENGINEER within the specified construction schedule as part of the finished grading required as part of this Project at no cost to the OWNER.

B. The licensed surveyor shall also fulfill construction staking requirements and responsibilities as specified in Article 6 of the General Conditions.

C. The CONTRACTOR shall provide competent, qualified personnel and materials required to perform all construction layout staking of the Work and will protect and preserve the established reference points and will make no change or relocations without the prior written approval of the OWNER.

D. The CONTRACTOR will report to the OWNER whenever any reference point is lost or destroyed or requires relocation because of necessary changes in grades or locations. The CONTRACTOR will replace and accurately relocate all reference points so lost, destroyed, or moved.

E. Field surveying shall include GIS location of all new underground piping and fittings as required by the City of Chandler.

PART 2 - PRODUCTS (NOT USED)

PART 3 - EXECUTION (NOT USED)

++ END OF SECTION ++

SECTION 01090

REFERENCE STANDARDS/ABBREVIATIONS

PART 1 - GENERAL

1.1 SUMMARY

A. This Section lists many of the construction industry organizations, professional and technical associations, societies and institutes, and government agencies issuing, promoting, or enforcing standards to which references may be made in the Contract Documents along with the abbreviations commonly used for those references. Also included are certain general requirements for the use of industry standards specified and for application of the standards in quality control.

1.2 USE OF REFERENCE STANDARDS

A. Work specified by reference to the published standard or specification of a government agency, technical association, trade association, professional society or institute, testing agency, or other organization shall conform to or surpass the minimum standards of quality for materials and workmanship established by the designated standard or specification.

B. Where so specified, products or workmanship shall also conform to the additional prescriptive or performance requirements included within the Contract Documents to establish a higher or more stringent standard of quality than that required by the referenced standard.

C. Where the specific date or issue of the standard is not included with the reference to the standard, the edition, including all amendments published and available on the first published date of the Invitation to Bid, shall apply.

D. Where two or more standards are specified to establish quality, the product and workmanship shall conform to or surpass the requirements of both.

E. In case of conflict between referenced standards, the more stringent shall apply.

F. Where both a standard and a brand name are specified for a product in the Contract Document, the proprietary product named shall conform to or surpass the requirements of the specified reference standard. The listing of a trade name in the Contract Documents shall not be construed as warranting that such product conforms to the respective reference standard.

G. Copies of Standards:

1. Copies of applicable referenced standards have not been bound in the Contract Documents.
2. Where copies of standards are needed by the CONTRACTOR for superintendence and quality control of the Work, obtain a copy or copies directly from the publication source and maintain in an orderly manner at the job site, available to the CONTRACTOR'S personnel, subcontractors, OWNER, and ENGINEER.
3. Submit for approval the requests to use products conforming to printed standards or publications with a different publication date from that effective under the Contract. Clearly indicate the changes in product or workmanship quality involved in the proposed change, if any, and reasons for the request.

1.3 ABBREVIATIONS

A. Abbreviations for trade organizations and government agencies. The following is a list of construction industry organizations and government agencies to which references may be made in the Contract Documents, with abbreviations used.

AA	Aluminum Association
AAMA	American Architectural Manufacturers Association
AAMA	Architectural Aluminum Manufacturers' Association
AASHTO	American Association of State Highway and Transportation Officials
ACI	American Concrete Institute
ADA	Americans with Disabilities Act
ADEQ	Arizona Department of Environmental Quality
ADHS	Arizona Department of Health Services
AFBMA	Anti-Friction Bearing Manufacturers' Association
AGMA	American Gear Manufacturers' Association
AHC	Architectural Hardware Consultant
AI	Asphalt Institute
AISC	American Institute of Steel Construction
AISI	American Iron and Steel Institute
AMCA	Air Moving and Conditioning Association
ANSI	American National Standards Institute
ARI	Air Conditioning and Refrigeration Institute
ASCE	American Society of Civil Engineers
ASHRAE	American Society of Heating, Refrigerating and Air Conditioning Engineers, Inc.
ASME	American Society of Mechanical Engineers
ASTM	American Society for Testing and Materials
AWI	Architectural Woodwork Institute
AWS	American Welding Society
AWSC	American Welding Society Code
AWI	Architectural Woodwork Institute
AWWA	American Water Works Association

BHMA	Builders Hardware Manufacturers' Association
CDA	Copper Development Association
CISPI	Cast Iron Soil Pipe Institute
CMAA	Crane Manufacturers' Association of America
CRSI	Concrete Reinforcing Steel Institute
CSI	Construction Specifications Institute
FS	Federal Specification
GA	Gypsum Association
HI	Hydraulic Institute
HMI	Hoist Manufacturers' Institute
ICBO	International Conference of Building Officials
ICC	International Code Council
ICEA	Insulated Cable Engineers' Association
IEEE	Institute of Electrical and Electronics Engineers, Inc.
IES	Illuminating Engineering Society
ISA	Instrument Society of America
IMIAWC	International Masonry Industry All Weather Council
JIC	Joint Industry Conferences of Hydraulic Manufacturers
LIA	Lead Industries Association
MAG	Maricopa Association of Governments
MBMA	Metal Building Manufacturers Association
MIA	Masonry Institute of America
MS	Military Specifications
MMA	Monorail Manufacturers' Association
NAAMM	National Association of Architectural Metal Manufacturers
NAAWS	North American Architectural Woodwork Standards
NEC	National Electrical Code
NEMA	National Electrical Manufacturers' Association
NESC	National Electric Safety Code
NFPA	National Fire Protection Association
NFPA	National Forest Products Association
NGA	National Glass Association
OSHA	Occupational Safety and Health Administration (both Federal and State)
PCI	Pre-cast Concrete Institute
PDI	Plumbing Drainage Institute
PS	Product Standards Section - U.S. Department of Commerce
RMA	Rubber Manufacturers' Association
SAE	Society of Automotive Engineers
SJI	Steel Joist Institute
SMACNA	Sheet Metal and Air Conditioning Contractors National Association
SSPC	Steel Structures Painting Council
TCNA	The Tile Council of North America

TMS	The Masonry Society
TPI	Truss Plate Institute
UBC	Uniform Building Code
UFC	Uniform Fire Code
UL	Underwriters' Laboratories, Inc.
WDMA	Window & Door Manufacturers Association
WEF	Water Environment Federation

B. Abbreviations for Common Terms:

AADF	Annual Average Daily Flow
ACI	American Concrete institute
ADA	Americans with Disabilities Act
ADEQ	Arizona Department of Environmental Quality
ADMM	Average Day Maximum Month
AISC	American Institute of Steel Construction
AOC	Approval Of Construction
APP	Aquifer Protection Permit
ASCE	American Society of Civil Engineers
ASHRAE	American Society of Heating, Refrigerating and Air-Conditioning Engineers
ASR	Aquifer Storage and Recovery
ASTM	American Society of Testing and Materials
ATC	Approval To Construct
AWRF	Airport Water Reclamation Facility
AWS	American Welding Society
BFP	Belt Filter Press
BOD	Biochemical Oxygen Demand
BWPS	Backwash Pump Station
CCB	Chlorine Contact Basin
CCP	Concrete Cylinder Pipe
CFU	Colony Forming Units
CIP	Capital Improvement Program
CLSM	Controlled Low-Strength Material
COD	Chemical Oxygen Demand
DCS	Distributed Control System
DIP	Ductile Iron Pipe
DO	Dissolved Oxygen
DSD	Development Services Department
EL	Elevation
EPDM	Ethylene Propylene Diene Monomer
FOPP	Fiber Optic Patch Panel
FRP	Fiberglass Reinforced Plastic
GPD	Gallons Per Day
GPM	Gallons Per Minute
GRIC	Gila River Indian Community

GRS	Galvanized Rigid Steel
HP	Horsepower
HVAC	Heating, Ventilation, and Air Conditioning
IBC	International Building Code
ICC-ES	International Code Council Evaluation Service, Inc.
IECC	International Energy Conservation Code
IFC	International Fire Code
IFGC	International Fuel Gas Code
IMC	International Mechanical Code
IMLR	Internal Mixed Liquor Recycle
IPC	International Plumbing Code
IPS	Influent Pump Station
LCA	Limited Condition Assessment
LCP	Local Control Panel
LED	Light-Emitting Diode
MBR	Membrane Bioreactor
MCC	Motor Control Center
MCESD	Maricopa County Environmental Services Department
MCP	Motor Control Panel
MGD	Million Gallons per Day
MLE	Modified Ludzack-Ettinger
MLSS	Mixed Liquor Suspended Solids
MOPO	Maintenance Of Plant Operations
NEC	National Electric Code
NFPA	National Fire Protection Association
NPW	Non-Potable Water
NTU	Nephelometric Turbidity Units
OCS	Odor Control System
OIT	Operator Interface Terminal
OMG	Ocotillo Management Group
OWRF	Ocotillo Water Reclamation Facility
PD	Positive Displacement
PIN	Process Information Network
PLC	Programmable Logic Controller
PSI	Pounds per Square Inch
PVC	Polyvinyl Chloride
Q	Influent Flow
RAS	Return Activated Sludge
RMB	Rapid Mix Basin
RPM	Rotations Per Minute
RW	Reclaimed Water
RWIF	Reclaimed Water Interconnect Facility
RWPS	Reclaimed Water Pump Station
SCADA	Supervisory Control And Data Acquisition

SCFM	Standard Cubic Feet per Minute
SES	Service Entrance Station
SHF	Solids Handling Facility
SHT	Sludge Holding Tank
SOTE	Surface Oxygen Transfer Efficiency
SWD	Side Water Depth
TBF	Traveling Bridge Filters
TDPS	Tank Drain Pump Station
TDS	Total Dissolved Solids
TMS	The Masonry Society
TN	Total Nitrogen
TOC	Table Of Contents
TSS	Total Suspended Solids
UV	Ultraviolet
VCP	Vendor Control Panel
VFD	Variable Frequency Drive
VPP	Vendor Power Panel
WAS	Waste Activated Sludge
WRF	Water Reclamation Facility
WSE	Water Surface Elevation
WW	Wash Water
WWEQ	Wash Water Equalization
WWTF	Wastewater Treatment Facility

PART 2 - PRODUCTS (NOT USED)

PART 3 - EXECUTION (NOT USED)

++ END OF SECTION ++

SECTION 01201

PRE-CONSTRUCTION CONFERENCE

PART 1 - GENERAL

1.1 SUMMARY

A. Date, Time and Location: Conference will be held after execution of the Contract and before construction is started at the site. The ENGINEER will fix the date, time and location of the meeting.

B. The ENGINEER shall prepare agenda, preside at meeting, and prepare and distribute a transcript of proceedings to all parties.

C. The CONTRACTOR shall provide data required, contribute appropriate items for discussion, and be prepared to discuss all items on agenda.

1.2 REQUIRED ATTENDANCE

A. The CONTRACTOR and major subcontractors.

B. The OWNER'S Representative.

C. The ENGINEER.

D. Representatives of government agencies having any degree of control or responsibility, if available.

E. Representatives of utility companies having any degree of control or responsibility, if available.

1.3 AGENDA

A. Agenda will include, but will not necessarily be limited to, the following:
   1. Designation of responsible personnel.
   2. The subcontractors.
   3. Contract time.
   4. Coordination and cooperation with other contractors.
   5. Progress Schedule.
   6. Processing of Shop Drawings and distribution of Submittals.
   7. Processing of field decisions and Change Orders.
   8. Requirements for copies of Contract Documents.
   9. Insurance in force.
   10. Schedule of Values.
   11. Processing and Schedule of Payments.

12. Use of premises.
13. The CONTRACTOR responsibility for safety and first aid procedures.
14. Security.
15. Housekeeping.
16. Field offices.
17. Record Drawings.
18. Letter of Notice to Proceed.
19. Operation and Maintenance Manuals.
20. Meetings.
21. Temporary utilities.
22. Permits.
23. Emergency telephone numbers.
24. Any other Project related items.

PART 2 - PRODUCTS (Not Used)

PART 3 - EXECUTION (Not Used)

++ END OF SECTION ++

SECTION 01202

PROGRESS MEETINGS

PART 1 - GENERAL

1.1 SUMMARY

A. Date and Time:
   1. Regular weekly meetings for the duration of construction or as designated by ENGINEER.
   2. Other Meetings: On call.

B. Place: ENGINEER'S field office or mutually agreed upon location.

C. ENGINEER shall prepare agenda, preside at meetings, and prepare and distribute a transcript of proceedings to all parties.

D. CONTRACTOR shall provide data required and be prepared to discuss all items on agenda.

1.2 MINIMUM ATTENDANCE

A. CONTRACTOR, subcontractors and suppliers as required, representatives present for each party shall be authorized to act on their behalf.

B. ENGINEER.

C. Others as appropriate.

1.3 AGENDA

A. Agenda will include, but will not necessarily be limited to, the following:
   1. Transcript of previous meeting.
   2. Progress since last meeting.
      a. CONTRACTOR.
      b. Subcontractors.
   3. Planned progress for next period.
   4. Shop Drawings.
   5. Problems, conflicts, and observations.
   6. Change Orders.
   7. Applications for Payment.
   8. Quality standards and control.
   9. Schedules, including status of off-site fabrication and delivery schedules. Corrective measures required.
   10. Coordination between parties.

11. Safety concerns.
12. Other business.
13. Next meeting date.

PART 2 - PRODUCTS (NOT USED)

PART 3 - EXECUTION (NOT USED)

++ END OF SECTION ++

SECTION 01300

SUBMITTALS

PART 1 - GENERAL

1.1 SUMMARY

A. The CONTRACTOR shall include a completed transmittal form for all submittals. Transmittal forms will be furnished to CONTRACTOR by ENGINEER at the pre-construction conference. Submittals shall be sent to the ENGINEER. CONTRACTOR shall deliver and pick up submittals from ENGINEER'S office located at 1620 W. Fountainhead Pkwy, Suite 501, Tempe, AZ 85282, between the hours of 8:00 a.m. and 5:00 p.m. All submittals shall be addressed to Sreeram Rengaraj.

1.2 SECTION INCLUDES

A. Shop Drawings.

B. Material and equipment record.

C. Samples.

D. Operation and Maintenance (O&M) Manuals.

E. Progress Schedule.

F. Progress reports.

G. Daily reports.

H. Testing results.

I. Pre-construction video.

J. Construction photographs.

K. Record Drawings.

L. Spare parts lists.

M. List of spare parts furnished.

1.3 DATA REFERENCE SYMBOLS AND DESCRIPTIONS

A. The submittal data required for Shop Drawings and operations manuals shall contain, but not necessarily be limited to, that data and material as defined by the coded legend set forth below. The submittal data required shall be as indicated and specified under various headings of the Specifications.
   1. Letters of Certification of Compliance on materials, equipment, etc.
   2. Samples.
   3. Final Certified Drawings showing outline dimensions, foundation layout or mounting information, and other pertinent dimensions.
   4. Field erection instructions, assembly drawings and/or diagrams, detailed reference drawing lists, lists of erection details, and list of spare parts supplied with equipment.
   5. Shop Detail Drawings showing individual sub- assemblies and fabricated pieces with material specifications and other applicable data.
   6. Installation instructions, operating and/or service manuals, and all other data pertinent to operating or servicing the complete apparatus. Preventative maintenance instructions and recommended frequency.
   7. Schematic and wiring diagrams of power, control, and piping systems. A detailed description of operation shall be included for each diagram to describe all modes of operation of the system indicated. Where the integrated system requires interlocking and control of other components in normal operation, these components shall be included in the description of operation.
   8. General bulletins and catalog cuts describing complete apparatus, including operating principles and fundamentals.
   9. Service data sheets showing design performance, utility requirements, etc., as applicable to the specific duty for which the equipment is furnished.
   10. Certified head and capacity curves for pumps. Impeller size furnished and maximum size available shall be noted on these data sheets.
   11. Curves and/or data for overall range of operation from minimum to maximum capacity or load, showing capacity or load, utilities motive medium required, total or incremental differential head, and other pertinent information applicable to the equipment or its component assemblies.
   12. Materials of construction of all components.
   13. Renewal parts list with diagrammatic or cross-section drawings showing part identification. Material analysis or trades designation for each significant part is to be noted on parts lists or on a separate sheet.
   14. Stuffing box sizes; packing sizes; specifications and arrangement; and mechanical seal details, specifications, etc., if furnished in equipment.
   15. Bearing manufacturer's standard identification and/or interchangeable number for all anti-friction bearings in the equipment proper and its accessory items.
   16. Material gradation, design mix, job mix formula, and/or material analysis.
   17. Concrete reinforcement drawings, details, and calculations. Reinforcement drawings shall be redrawn by the CONTRACTOR to allow for clarity and scale necessary for easy review by the ENGINEER.

18. Competed equipment data sheets.

B. A copy of this specification section, with addendum updates included, and all referenced and applicable sections, with addendum updates included, with each paragraph check-marked to indicate specification compliance or marked to indicate requested deviations from specification requirements. Check marks (✓) shall denote full compliance with a paragraph as a whole. If deviations from the specifications are indicated, and therefore requested by the CONTRACTOR, each deviation shall be underlined and denoted by a number in the margin to the right of the identified paragraph, referenced to a detailed written explanation of the reasons for requesting the deviation. The ENGINEER shall be the final authority for determining acceptability of requested deviations. The CONTRACTOR shall furnish equipment and/or services as specified if an exception and/or deviation is rejected. The remaining portions of the paragraph not underlined will signify compliance on the part of the CONTRACTOR with the specifications. Failure to include a copy of the marked-up specification sections, along with justification(s) for any requested deviations to the specification requirements, with the submittal shall be sufficient cause for rejection of the entire submittal with no further consideration.

C. The CONTRACTOR shall submit the preventive maintenance information package as part of the shop drawing submittal package to the ENGINEER for review and approval. **SHOP DRAWING SUBMITTAL PACKAGE WILL NOT BE APPROVED WITHOUT ACCEPTANCE OF PREVENTIVE MAINTENANCE INFORMATION.**

1.4 SHOP DRAWINGS

A. A minimum of 1 hard copy of Shop Drawings is required for each submittal. Each submittal shall also include one electronic copy in the latest version of Adobe Acrobat (PDF Extension). Hard copies will not be returned. Disposition of the Shop Drawings will be in accordance with the following schedule:

Action by ENGINEER	Retained by ENGINEER	Returned to CONTRACTOR	No. Required for Resubmittal
Accepted for Use	1	0	0
Accepted as Noted	1	0	0
Returned for Corrections, Revise and Return	0	1	1
Rejected	0	1	1
Not Reviewed	1	0	0
No Action Taken	1	0	0

B. The ENGINEER shall return Shop Drawings to the CONTRACTOR within 35 days of receipt by the ENGINEER.

C. One copy of returned Shop Drawings shall be marked with red line comments.

D. Only one copy of "Returned for Corrections, Revise and Return", "Rejected", and "No Action Taken" Shop Drawings will be stamped.

E. If the CONTRACTOR requires additional copies of "Accepted for Use", "Accepted as Noted", or "No Action Taken" Shop Drawings, additional copies shall be included in original submittal.

F. The CONTRACTOR may request submittals be reviewed up to two times for each equipment or construction material item, regardless of manufacturer or supplier, by the ENGINEER. For additional reviews, CONTRACTOR will reimburse the ENGINEER for additional labor as specified in Section 01013, Engineering Services.

G. The CONTRACTOR will be held responsible for any delay in progress of the Work due to resubmittal of Shop Drawings. Time for completion of the Contract will not be extended due to the CONTRACTOR'S failure to promptly submit complete and acceptable Shop Drawings, product data, and samples.

H. Do not execute Work required by Shop Drawings until accepted Shop Drawings are received from the ENGINEER.

I. Before submitting Shop Drawings for review, the CONTRACTOR shall check Shop Drawings for accuracy, ascertain that all Work contiguous with and having bearing on other Work shown on Shop Drawings is accurately drawn, and that Work shown is in conformity with Contract requirements. The CONTRACTOR is responsible for all submittals from subcontractors and suppliers.

J. All such Drawings and details, when submitted, must bear the stamp of approval of the CONTRACTOR, bearing checked data, as evidence that such Drawings and details have been checked by him. Said "stamp" shall clearly state that the CONTRACTOR has checked the Drawings and, by his signature, he so certifies. Any Drawings submitted without such executed stamp of approval, or whenever it is evident (despite the stamp) that the Drawings have not been checked, they will be returned to the CONTRACTOR for resubmission and will not be considered. In such event, it will be deemed that the CONTRACTOR has not complied with this provision and the CONTRACTOR shall bear risk of all delays to the same extent as if no Drawings or details had been submitted.

K. The CONTRACTOR shall prepare composite Drawings and installation layouts, when required to solve tight field conditions. Such Drawings shall consist of dimensioned plans and elevations, and must give complete information particularly as to size and location of sleeves, inserts, attachments, openings, conduits, ducts,

boxes, structural interferences, etc. These composite Drawings and installation layouts shall be coordinated in the field by the CONTRACTOR and his subcontractors for proper relationship to the work of other trades, based on field conditions, and shall be checked and approved by them before submission to the ENGINEER for his final review. The CONTRACTOR shall have competent technical personnel readily available for such coordinating and checking, as well as for supervision of field installation of work as per the Drawings and installation layouts, which have been previously determined by him to be correct and carry the ENGINEER'S review stamp.

L. Submission of Shop Drawings (in either original submission or when resubmitted with corrections) constitute evidence that the CONTRACTOR has checked all information thereon, and that he accepts and is willing to perform the Work as shown in a workmanlike manner and in accordance with best standard practice.

M. Cost of any changes in construction due to improper checking and coordination by the CONTRACTOR shall be paid for by the CONTRACTOR, and the CONTRACTOR shall be responsible for all additional costs, including coordination.

N. Shop Drawings shall clearly delineate the following information:
   1. ENGINEER'S name and Project number; Project name and address.
   2. Drawing title, number, date, and scale.
   3. Names of CONTRACTOR, Subcontractor, and fabricator.
   4. Working and erection dimensions.
   5. Arrangements and sectional views.
   6. Necessary details, including complete information for making connections with other work.
   7. Kinds of materials and finishes.
   8. Show descriptive names of materials and equipment, classified item numbers, and locations at which materials or equipment are to be installed in the Work. Use same reference identification as shown on Contract Drawings.

O. If Shop Drawings show variations from Contract Documents because of standard shop practice or other reasons, make specific mention of such variations in a separate memo attached to information listed in Paragraph 1.3.B of this Section.

P. Shop drawing review will be general. It shall not relieve the CONTRACTOR of responsibility for accuracy of such Shop Drawings, nor proper fitting, construction of Work, furnishing of materials, or Work required by Contract Documents and not indicated on Shop Drawings. Shop drawing review shall not be construed as approving departures from Contract Documents.

Q. Review of Shop Drawings and schedules shall not relieve the CONTRACTOR from responsibility for any violation indicated on such Drawings or schedules of local,

County, State, or Federal laws, rules, ordinances, or rules and regulations of commissions, boards, or other authorities or utilities having jurisdiction.

R. When product data, consisting of manufacturer's printed literature, is required to be submitted to the ENGINEER, it shall be submitted in original form. Any fading type of reproduction will not be accepted. Pertinent information shall be indicated and irrelevant information shall be crossed out.

S. Action taken by ENGINEER shall apply to entire submittal. ENGINEER shall not approve portions of a submittal while disapproving other portions.

T. Resubmitted submittal shall contain entirety of information to review.

U. The following is a list of anticipated submittals for this project, however it may not be a complete list. This list does not alleviate Contractor from obligations of requirements of each individual Technical Specification that may require additional information. See individual Technical Specification Sections for additional requirements.

CHANDLER RWIF – PROCUREMENT SUBMITTAL LISTING		
ITEM NO	**SPEC SECT**	**DESCRIPTION OF SUBMITTAL**
1	01012	PLANT OPERATION DURING CONSTRUCTION
2	01050	FIELD ENGINEERING/SURVEYING
3	01300	SUBMITTALS
4	01310	PROGRESS SCHEDULE
5	01380	CONSTRUCTION PHOTOGRAPHS
	01400	QUALITY CONTROL
	01412	STORMWATER POLLUTION PREVENTION PLAN AND PERMIT
6	01500	CONSTRUCTION FACILITIES AND TEMPORARY CONTROL
7	01650	STARTING OF SYSTEMS
	01660	FIELD TEST OF EQUIPMENT
8	01700	CONTRACT CLOSEOUT
9	01715	TESTING OF HYDRAULIC STRUCTURES
10	01720	RECORD DOCUMENTS
11	01730	OPERATION AND MAINTENANCE DATA
12	01750	SPARE PARTS AND MAINTENANCE MATERIAL
13	01821	INSTRUCTION OF OPERATIONS AND MAINTENANCE PERSONNEL
14	02050	DEMOLITIONS
15	02100	SITE PREPARATIONS

CHANDLER RWIF – PROCUREMENT SUBMITTAL LISTING		
ITEM NO	**SPEC SECT**	**DESCRIPTION OF SUBMITTAL**
	02150	SHORING
16	02315	EARTHWORK, EXCAVATION AND BACKFILL
17	02318	CRUSHED STONE, GRAVEL AND DECOMPOSED GRANITE
18	02319	RIPRAP
19	02371	FILTER FABRIC FOR RIPRAP CHANNELS
	02480	LANDSCAPE
20	02500	ASPHALT PAVEMENTS
21	02580	PAVEMENT MARKINGS
22	02751	PORTLAND CEMENT CONCRETE PAVING
	02810	IRRIGATION SYSTEM
	02821	FENCING
23	03100	CONCRETE FORMWORK
24	03200	CONCRETE REINFORCEMENT
25	03251	CONCRETE JOINTS
26	03300	CAST-IN-PLACE CONCRETE
	03433	PRE-CAST PRESTRESSED LONG SPAN UNITS
28	03600	GROUT
29	04820	REINFORCED UNIT MASONRY ASSEMBLIES
30	05051	ANCHOR BOLTS, TOGGLE BOLTS, AND CONCRETE INSERTS
31	05120	STRUCTURAL STEEL AND FRAMING
32	05500	METAL FABRICATIONS
33	05502	CANTILEVERED SLIDING GATE
34	05510	METAL STAIRS
35	05521	ALUMINUM HANDRAIL
37	05530	ALUMINUM GRATING
38	05532	ALUMINUM CHECKERED PLATE
39	06100	ROUGH CARPENTRY
41		
42	06600	FIBERGLASS FABRICATIONS
43	07411	METAL ROOF PANELS
44	07530	ELASTOMERIC MEMBRANE ROOFING
45	07600	FLASHING AND SHEET METAL
46	07700	ROOF SPECIALTIES AND ACCESSORIES
47	07840	FIRESTOPPING
48	07900	JOINT SEALERS

CHANDLER RWIF – PROCUREMENT SUBMITTAL LISTING		
ITEM NO	**SPEC SECT**	**DESCRIPTION OF SUBMITTAL**
49	08110	STEEL DOORS AND FRAMES
50	08120	ALUMINUM DOORS AND FRAMES
52	08331	OVERHEAD COILING DOORS
54	08710	DOOR HARDWARE
55	08800	GLAZING
57	09260	GYPSUM BOARD ASSEMBLIES
58	09300	TILING
59	09511	ACOUSTICAL CEILINGS
60	09650	RESILIENT FLOORING
61		
62	09900	PAINTING
64	09910	PVC LINER
65	09920	COATING SYSTEMS
66		
67	10242	ROOFTOP EQUIPMENT SCREENS
68	10400	EQUIPMENT IDENTIFICATION PLATES
69	10425	SIGNS
71		
72		
73	10523	FIRE PROTECTION SPECIALTIES
74	11217	SAMPLE PUMPS
75	11220	INLINE RAPID MIXERS
76	11285	HYDRAULIC GATES
77	11295	HYDRAULIC VALVES
78	11311	SUBMERSIBLE PUMPS
79	11314	END SUCTION CENTRIFUGAL PUMPS
80	11320	SELF-CLEANING STRAINERS
81	11371	POSITIVE DISPLACEMENT BLOWERS
82	11372	AIR COMPRESSORS
83	11500.1	MEMBRANE EQUIPMENT SYSTEM
84	11715	CHEMICAL METERING PUMPS AND APPURTENANCES
85	12492	HORIZONTAL LOUVER BLINDS
86	13110	CATHODIC PROTECTION SYSTEM
87	13121	METAL CANOPIES

CHANDLER RWIF – PROCUREMENT SUBMITTAL LISTING		
ITEM NO	**SPEC SECT**	**DESCRIPTION OF SUBMITTAL**
88	13127	EXTRUDED FLAT PANEL COVERS
89	13128	ELECTRIC OPERATOR
90	13207	FIBERGLASS REINFORCED PLASTIC ABOVE GROUND STORAGE TANKS
91	13300	PRE-ENGINEERED BUILDING
92	13445	PNEUMATIC CONTROLLERS AND CONTROL VALVES
93	13447	ELECTRIC MOTOR ACTUATORS
94	13930	WET PIPE FIRE EXTINGUISHING SYSTEM
	14630	HOISTS, TROLLEYS, MONORAILS
	15010	BASIC MECHANICAL REQUIRMENTS
95	15050	PIPING SYSTEMS
96	15051	BURIED PIPING INSTALLATION
97	15052	EXPOSED PIPING INSTALLATION
98	15061	DUCTILE IRON PIPE
99	15062	STEEL PIPE
100	15064	COPPER PIPE
101	15065	THERMOPLASTIC PIPE AND ACCESSORIES
102	15066	STAINLESS STEEL PIPE
103	15067	FIBERGLASS REINFORCED PLASTIC PIPE AND ACCESSORIES
104	15120	PIPING SPECIALTIES AND ACCESSORIES
105	15140	SUPPORTS AND ANCHORS
106	15260	PIPING INSULATION
107	15290	DUCT WORK INSULATION
108	15400	PLUMBING FIXTURES AND EQUIPMENT
109	15410	PLUMBING PIPING
110	15430	PLUMBING SPECIALTIES
111	15440	PLUMBING FIXTURES
	15441	SUMP PUMPS
112	15450	PLUMBING EQUIPMENT
113	15680	EVAPORATIVE COOLERS
114	15781	AIR CONDITIONING UNIT
115		
116	15885	AIR CLEANING
117	15890	DUCT WORK
118	15910	DUCT WORK ACCESSORIES
119	15936	AIR OUTLETS AND INLETS
121	15982	LINE VOLTAGE THERMOSTAT

CHANDLER RWIF – PROCUREMENT SUBMITTAL LISTING		
ITEM NO	**SPEC SECT**	**DESCRIPTION OF SUBMITTAL**
122	15990	TESTING, ADJUSTING AND BALANCING
	16000	GENERAL ELECTRICAL REQUIREMENTS*
	16001	PACKAGED SYSTEMS AND PACKAGED CONTROL PANELS*
	16010	ELECTRICAL: BASIC REQUIREMENTS*
	16050	BASIC MATERIALS AND METHODS*
123	16060	ELECTRICAL DEMOLITIONS
124	16062	LIGHTNING PROTECTION
125	16111	CONDUITS
126	16117	CONCRETE MANHOLES, HANDHOLES AND PULL BOXES
127	16123	600 VOLT CLASS CABLE
128	16124	INSTRUMENTATION CLASS CABLE
129	16130	OUTLET, PULL, AND JUNCTION BOXES
130	16137	UNDERGROUND DUCT BANKS
131	16141	WIRING DEVICES
132	16142	WEATHERPROOF WHILE IN USE OUTLET ENCLOSURES
133	16143	TERMINAL BLOCKS
134	16160	ENCLOSURES
135	16161	CONTROL PANELS
136	16170	GROUNDING AND BONDING
137	16190	SUPPORTING DEVICES
138	16195	ELECTRICAL IDENTIFICATION
139	16225	ELECTRIC MOTORS 250 HP OR LESS
140	16282	SURGE PROTECTIVE DEVICE
	16305	5KV CLASS CABLE*
141	16321	OIL FILLED SUBSTATION TRANSFORMERS
142	16341	MEDIUM VOLTAGE LOAD INTERRUPTER SWITCHGEAR
143	16430	CUSTOMER POWER METERING SYSTEM
144	16432	SERVICE ENTRANCE SECTION
145	16440	DISCONNECT SWITCHES
146	16461	TRANSFORMERS – DRY TYPE
147	16470	PANELBOARDS
148	16474	MOTOR CONTROL EQUIPMENT (SEPARATELY MOUNTED)
150	16477	600 V FUSES
151	16481	MOTOR CONTROL CENTERS (MCC)

CHANDLER RWIF – PROCUREMENT SUBMITTAL LISTING		
ITEM NO	**SPEC SECT**	**DESCRIPTION OF SUBMITTAL**
152	16482	SOLID STATE MOTOR CONTROLLERS
153	16485	VARIABLE FREQUENCY DRIVES – LOW VOLTAGE
	16494	MANUAL TRANSFER SWITCH*
154	16500	LIGHTING
155	16611	STATIC UNINTERRUPTIBLE POWER SUPPLY
156	16720	FIRE SURVEILLANCE AND ALARM SYSTEM
158	16912	ETHERNET NETWORK EQUIPMENT
159	16913	SINGLE CIRCUIT, COORDINATION, AND ARC-FLASH HAZARD REPORT
160	16920	ELECTRICAL ACCEPTANCE TESTING
161	16951	SHORT CIRCUIT, COORDINATION AND ARC FLASH HAZARD REPORT
	17000	INSTRUMENTATION*
162	17111	FLOAT SWITCHES
163	17120	PRESSURE TRANSMITTERS
164	17121	PRESSURE SWITCHES AND GAUGES

	17122	LEVEL TRANSMITTERS – PRESSURE TYPE*
166	17124	SUBMERSIBLE LEVEL TRANSMITTER
167	17125	RADAR LEVEL TRANSMITTER
168	17134	FLOW SWITCHES
169	17137	MAGNETIC FLOWMETERS
	17138	INSERTION MASS FLOW METERS*
170	17150	LIMIT AND POSITIONS SWITCHES
171	17221	ELECTRONIC 4-20 MA INDICATORS
172	17222	SIGNAL CONDITIONERS
174	17325	TURBIDITY AND TSS ANALYZERS
176	17420	pH/ORP SENSORS AND ANALYZERS
177	17421	CHLORINE RESIDUAL ANALYZER
178	17451	DISTRIBUTED CONTROL SYSTEM
179	17452	MODICON UNITY PLC SYSTEMS SOFTWARE AND ACCESSORIES
180	17454	OPERATIONS AND CONTROL DESCRIPTIONS
181	17455	OPERATOR INTERFACE TERMINAL SOFTWARE AND HARDWARE
182	17456	PROGRAMMING GENERAL
	17458	MODICON UNITY PLC SYSTEM SOFTWARE AND ACCESSORIES*
183	17461	PLC SYSTEM HARDWARE (MODICON M340)
	17462	MODICON UNITY PLC SYSTEM SOFTWARE AND ACCESSORIS*

1.5 PROCEDURE

A. A letter of transmittal shall accompany each submittal. If data for more than one Section of the Specifications is submitted, a separate transmittal letter shall accompany the data submitted for each Section.

B. All letters of transmittal shall be submitted in duplicate.

C. At the beginning of each letter of transmittal, provide a reference heading indicating the following:
   1. OWNER'S Name City of Chandler
   2. Project Name RWIF Project
   3. Contract No.
   4. Transmittal No.
   5. Section No.

D. If any portion of a Shop Drawing deviates from the requirements of the Contract Documents, CONTRACTOR shall specifically note each variation in his letter of transmittal.

E. All Shop Drawings submitted for approval shall have a title block with complete identifying information satisfactory to ENGINEER.

F. All Shop Drawings submitted shall bear the stamp of approval and signature of CONTRACTOR as evidence that they have been reviewed and verified to the completeness of the submittal by CONTRACTOR. Submittal without this stamp of approval will not be reviewed by ENGINEER and will be returned to CONTRACTOR. CONTRACTOR'S stamp shall contain the following minimum information:

Project Name: RWIF Project

CONTRACTOR'S Name: _____

Date: _____

Reference: _____

Item: _____

Specifications: _____

Section: _____

Page No.: _____

Para. No.: _____

Drawing No.: _____ of _____

Location: _____

Submittal No.: _____

Approved By: _____

G. In order to identify and track all submittals as separate and unique items, CONTRACTOR shall utilize the submittal identification numbering system as follows:
   1. The Submittal Number shall be a separate and unique number correlating to each individual submittal that is required to be tracked as a separate and unique

item. The Submittal Number shall be a two part, nine character, alpha/numeric number assigned by CONTRACTOR in the following manner:

a. The first part of the Submittal Number shall consist of five characters that pertain to the applicable Specification Section number.
b. The second part of the Submittal Number shall consist of three numbers. The first digit identifies the Submittal type as follows:
    1) 0 - Shop Drawing.
    2) 1 - Operations and Maintenance Manual.
    3) 2 - Training Manual.
c. The second and third digits (numbers 01 to 99) number each separate and unique Submittal submitted under each Specification Section.
d. A dash shall separate the two parts of the Submittal Number.
e. A typical Submittal Number for the third Working Shop Drawing submitted under Section 11320, Self Cleaning Strainers, would be 11320-001r03.
f. A typical Submittal Number for the first Working Operations and Maintenance Manual submitted under Section 11285, Hydraulic Gates, would be 11285-001.

1.6 MATERIAL AND EQUIPMENT RECORD

A. The CONTRACTOR shall maintain an up-to-date record of all materials and equipment furnished by him and any subcontractors to be incorporated in the Work.
    1. The ENGINEER will furnish the CONTRACTOR a master of the materials and equipment form. The CONTRACTOR shall maintain the records on reproductions of this form in the field office.

B. The CONTRACTOR shall provide the following information on these forms:
    1. The Specification Paragraph and Section Number where material or equipment are called for.
    2. Date ordered.
    3. Date required.
    4. The CONTRACTOR'S purchase order number.
    5. Supplier's purchase order number.
    6. Date promised.
    7. Date received.
    8. Supplier's name and address.
    9. Remarks.
    10. Shop Drawings and samples with approval date.
    11. Physical dimensions and ratings.
    12. Where submittal sheet describes items in addition to that item being submitted, the submitted item shall be clearly marked on the sheet and superfluous information shall be crossed out.

C. Three copies of the materials and equipment record shall be submitted to the ENGINEER with each Application for Payment. If the current record has not been submitted, the Application shall not be reviewed and shall be returned to the CONTRACTOR as incomplete.

D. The CONTRACTOR shall permit free access to these records, including information on items recently received and not yet posted to the record by the ENGINEER or authorized representative of the OWNER at any time.

1.7 SAMPLES

A. Deliver no material to the building site prior to receipt of the ENGINEER'S written approval. Furnish materials equal in every respect to approved samples and execute Work in conformity therewith. Samples shall be provided with respective Shop Drawings.

B. The approval or acceptance of samples will not preclude the rejection of any material upon the discovery of defects in same prior to the Final Acceptance of the completed Work.

C. After a material has been approved, no change in brand or make will be permitted unless satisfactory written evidence is presented to and approved by the ENGINEER that the manufacturer cannot make scheduled delivery of approved material, or that material delivered has been rejected and substitution of suitable material is an urgent necessity, or that other conditions are apparent which indicate approval of such substitute materials to be in best interest of the OWNER. CONTRACTOR shall provide complete Shop Drawings for replacement product.

D. All samples of materials requiring laboratory tests shall be submitted to laboratory for testing not less than 90 days before such materials are required to be used in the work. Submit all other samples for approval within 30 days after signing of the Contract.

E. Submit samples in duplicate, except where greater or lesser number is specifically required by these Specifications. Submittal shall be made only by the CONTRACTOR, unless he has authorized his subcontractor to submit them and has notified the ENGINEER to this effect.

F. Each sample shall be accompanied by a Shop Drawing form and an itemized transmittal form. The transmittal shall contain list of samples, Project, CONTRACTOR, manufacturer, brand, quarry, quality, etc.; also Project number, Specifications reference, ASTM number (if any), and material being furnished. Enclose copies of transmittal with samples. Any deviation from Contract requirements shall be so stated in the transmittal.

G. Label each sample by a securely attached label giving the Project, CONTRACTOR, subcontractor or supplier, manufacturer's name, product trade name and number, material type, Specification Section and Paragraph reference etc.; also Project name and number and ASTM number (if any).

H. Samples shall be of adequate size to permit proper evaluation. The samples submitted shall show the full range of colors, textures and dimensions, and other variable characteristics expected. Samples of different items that must match or whose finish relates shall be delivered at the same time to facilitate coordination.

I. Samples which are rejected by the ENGINEER must be resubmitted as soon as possible after notification of rejection, and shall be marked "Resubmitted Sample" in addition to other information required.

J. The right is reserved to require submission of samples of any material, any material lists, or any information whether or not specifically specified in the Specifications.

1.8 OPERATION AND MAINTENANCE MANUALS

A. One hard copy and one electronic copy in PDF format of an Operations and Maintenance (O&M) Manual containing the following items, in addition to any instructions packed with the equipment, are required for each individual item of equipment:
   1. Specifications.
   2. Drawings.
   3. Description of each individual item of equipment.
   4. Manufacturer name, model number, and serial numbers.
   5. Name address and phone number of both the manufacturer's customer service department and the local manufacturer's representative.
   6. Installation instructions.
   7. Operation and maintenance instructions, including lubrication schedule and lubricant specification.
   8. Parts list and part numbers.
   9. Additional data to be included in the manual shall be as required in these Specifications.
   10. Temporary storage recommendations.
   11. Warranty information.

B. O&M Manuals are to be submitted to the ENGINEER upon delivery of the equipment to the site. Overall Project substantial completion will not be scheduled until all manuals are approved. Training shall not be scheduled until O&M Manuals are approved. Training shall not be scheduled until 30 days following delivery of approved O&M Manuals to the OWNER. Training shall be scheduled based on draft O&M Manuals upon approval of ENGINEER.

C. The respective manuals for the individual items of equipment shall be combined into bound volumes covering the complete operating installation with individual equipment items tabled separately. Information for equipment subassemblies not manufactured by the major supplier shall also be included with the respective equipment item.

D. Manuals for particular items of equipment which are in the same area (i.e., Positive Displacement Blowers and Air Compressors) should be bound in the same volume where practicable.

E. Upon completion of the installation of each item of equipment, the CONTRACTOR shall provide As-Built Drawings of the local control panel to be added to the O&M Manual, as well as set-up parameters such as those required for VFDs, instrumentation, calibration, etc. Manuals for particular items of equipment which are in the same area (i.e., end suction centrifugal pumps and membrane equipment system) should be bound in the same volume where practicable.

F. O&M Manuals shall be submitted in 3-ring binders meeting the following criteria:
   1. Binders shall be Wilson Jones Custom View Organization, D-Ring, white, non-stick, back mounted, binder models 362-13W, 386-14W, 386-34W, 386-44W, 386-49W, or 386-54W; or approved equal.
   2. Binder cover insert shall be created using a Microsoft word template supplied by ENGINEER. Modifications to the template shall be approved by the ENGINEER prior to submission of the O&M Manuals. The binder cover insert shall include the Specification number and title as presented within the Contract Documents, manufacturer name, year of purchase, year and month that equipment was placed into operation.
   3. Binder spine insert shall be created using a Microsoft word template supplied by ENGINEER. Modifications to the template shall be approved by the ENGINEER prior to submission of the O&M Manuals. The spine insert shall include the Specification number and title as presented within the Contract Documents, manufacturer name, year of purchase, year and month that equipment was placed into operation. Spine insert shall read top to bottom.

1.9 PROGRESS SCHEDULE

A. Progress Schedule as defined in Section 01310, Progress Schedule.

1.10 DAILY REPORTS

A. The CONTRACTOR will provide to the ENGINEER a daily report on a form provided by the ENGINEER indicating the Work in progress, Work completed, equipment used, numbers and category of personnel, and such other pertinent information as applicable. The daily reports shall be compiled and submitted monthly with the Application for Payment. The Application for Payment will not be

reviewed and shall be returned to the CONTRACTOR as incomplete if the reports do not accompany it.

1.11 TESTING RESULTS

A. CONTRACTOR shall furnish to the ENGINEER copies of all testing results for all tests required in the Specifications.

1.12 CONSTRUCTION PHOTOGRAPHS

A. Construction photographs as defined in Section 01380, Construction Photographs.

1.13 RECORD DRAWINGS

A. Record Drawings as defined in Section 01700, Contract Closeout. The CONTRACTOR shall update Record Drawings Monthly and make available for review to the ENGINEER monthly one week prior to the Application for Payment submittal. Failure of the CONTRACTOR to maintain updated Record Drawings can be justification for refusal of Application for Payment.

1.14 UNIT RESPONSIBILITY

A. This Section contains the required Unit Responsibility Form for the CONTRACTOR to use in documenting Work required under this Contract.

B. The Unit Responsibility Form provided in Appendix A to this Section is referenced from other Sections in the Contract Documents. The CONTRACTOR shall submit it with the applicable equipment as required in those Sections.

1.15 CONTRACTOR'S FORMS

A. This Section contains the required forms for CONTRACTOR use in documenting testing Work and other Work required under this Contract. This Section supplements, but does not supersede, specific testing requirements found elsewhere in the Contract Documents.

B. The forms listed below are included in this Section are referenced from other Sections in the Contract Documents. CONTRACTOR may utilize standard forms when authorized by ENGINEER. Forms will include, but will not necessarily be limited to, the following.

Form Designation	Title
A	Schedule of Values
B	Shop Drawings, Product Data and Sample Transmittal Schedule
C	Request for Change Order Proposal

D	Change Order Proposal
E	Request for Information
F	Request for Alteration
G	CONTRACTOR'S Daily Construction Report
H	Equipment Information Form
I	Manufacturer's Installation Certification Form
J	Equipment Test Report Form
K	Operation and Maintenance Transmittal Form
L	Manufacturer's Instruction Certification Form
M	Motor Data Form
N	Wire and Cable Resistance Test Data Form
O	Installed Motor Test Data Form
P	Dry Transformer Test Data Form
Q	Motor Control Center Test Form
R	Medium Voltage Motor Starter Test Form
S	Medium Voltage Switchgear Test Form
T	Protective Relay Test Form
U	Low Voltage Switchgear Test Form
V	Medium Voltage Load Interrupter Switch Test Form
W	Liquid-Filled Transformer Test Form
X	Automatic Transfer Switch Test Form
Y	Neutral Grounding Resistor Test
Z	Conduit and Wire Termination Sheet (not included)
AA	Loop Wiring and Insulation Resistance Test Data Form
BB	Control Circuit Piping Leak Test Form
CC	Controller Calibration Test Data Form
DD	Panel Indicator Calibration Test Data Form
EE	Recorder Calibration Test Data Form
FF	Signal Trip Calibration Test Data Form
GG	Field Switch Calibration Test Data Form
HH	Transmitter Calibration Test Data Form
II	Miscellaneous Instrument Calibration Test Data Form
JJ	Individual Loop Test Data Form
KK	Loop Commissioning Test Data Form
LL	Pipe Test Report

C. CONTRACTOR shall complete the above referenced forms prior to start-up of each piece of equipment, as listed in the Equipment and Valve Schedule. Each form shall pertain to each equipment number.

D. The CONTRACTOR shall submit to ENGINEER for approval one month after completion of start-up, 3-ring binders with tabs for each process area and include all the forms completed prior to start-up. The forms shall be further tabbed within each process area of each form designation as listed above. For example, the Chemical Facilities tab (22) shall include separate tabs for forms H, J, K, and etc. The

CONTRACTOR shall submit five copies of all 3-ring binders to the ENGINEER for approval.

E. All forms are provided in Appendix B of this Section.

1.16 ADDITIONAL SUBMITTALS

A. All additional submittals as required by the Contract Documents.

PART 2 - PRODUCTS (NOT USED)

PART 3 - EXECUTION (NOT USED)

APPENDIX A - Unit Responsibility Form

(Job Title)

CERTIFICATE OF UNIT RESPONSIBILITY
for Specification Section _____

_____
(Section title)

In accordance with Paragraph 01600.1.2.B of the Contract Documents, the undersigned manufacturer accepts unit responsibility for all components of equipment furnished under specification Section _____. We hereby certify that these components are compatible and comprise a functional unit suitable for the specified performance and design requirements.

_____
Notary Public

_____
Commission expiration date

Seal:

_____
Name of Corporation

_____
Address

By: _____
Duly Authorized Official

_____
Legal Title of Official

Date: _____

SCHEDULE OF VALUES

Sheet _____
of _____

Section No._____

Item Description	Material	Labor	Equipment	Total

SHOP DRAWINGS, PRODUCT
DATA AND SAMPLE
SUBMITTAL SCHEDULE

CONTRACTOR _____
Project Name _____
Project No. _____ Date _____ Page ___ of_____

Item No.	Description	Specification Section Number	Date To Be Submitted	Approval Needed By	Date Submitted	Date Reviewed	Transmittal Number

REQUEST FOR CHANGE ORDER PROPOSAL

Date: _____

CONTRACTOR _____

_____

_____

Project Name _____

Project No. _____

Change Order No. _____

NOTICE TO CONTRACTOR: Please submit a Change Order Proposal for the proposed modifications to the Contract Documents as described below. If acceptable, a Change Order will be issued to authorize the work. THIS IS NOT A CHANGE ORDER FOR AUTHORIZATION TO PROCEED WITH THE WORK AS DESCRIBED!

SCOPE OF WORK:

OWNER _____

CHANGE ORDER PROPOSAL

Date _____

Subject: Project Name _____

Project No._____

Change Order No._____

Dear Sir:

Certain items of extra work have been found necessary which are not covered by the Contract for the above referenced Project. Therefore, we submit the following amounts as the basis of compensation for such extra work:

JUSTIFICATION:

The Contract completion time will be (increased)(decreased) ____ consecutive calendar days.

Total Cost of Extra Work Covered by Above:	$_____
Previously Approved Extra Work:	$_____
Original Contract Amount	$_____
TOTAL:	$_____

By: _____

Title:_____

CONTRACTOR: _____

CITY OF CHANDLER
RECLAIMED WATER INTERCONNECT FACILITY
REQUEST FOR INFORMATION

CONTRACTOR_____ RFI# _____
Requested By_____ Directed to _____
Subject_____ Date Received _____
Spec. Section_____ Date Transmitted _____
Drawing References_____ Date Reply Received _____
Date Reply Needed_____ Date Reply Transmitted _____

INFORMATION NEEDED:

Date _____ Signature _____

REPLY:

Date _____ Signature _____

CITY OF CHANDLER
RECLAIMED WATER INTERCONNECT FACILITY
REQUEST FOR ALTERATION

CONTRACTOR_____ RFA# _____
Requested By_____ Directed to _____
Subject_____ Date Received _____
Spec. Section_____ Date Transmitted _____
Drawing References_____ Date Reply Received _____
Date Reply Needed_____ Date Reply Transmitted _____

REQUESTED ALTERATION:

Date _____ Signature _____

REPLY:

Date _____ Signature _____

CONTRACTOR _____

_____

_____

CONTRACTOR'S DAILY CONSTRUCTION REPORT

Project Name _____

Project No. _____ Report No. _____

Date _____

CONTRACTORS WORK FORCE:		SUBCONTRACTORS WORK FORCE:		EQUIPMENT ON SITE:		
					In Use	Not in Use
Administrative		Mechanical		Cranes		
Supervisors		Electrical		Loaders		
Carpenters		Instrumentation		Dozers		
Iron Workers		Sitework		Scrapers		
Operators		Masonry		Compactors		
Finishers		Roofing		Compressors		
Welders		Rebar		Welders		
Electricians		Foundation		Graders		
Laborers		Painting		Trucks		
				Backhoe		

Work Performed: _____

_____

_____

Material and Equipment Delivered: _____

_____

_____

Remarks: _____

_____

_____

By: _____

Title: _____

CITY OF CHANDLER
RECLAIMED WATER INTERCONNECT FACILITY
EQUIPMENT INFORMATION FORM

Name: _____ Date: _____

EQUIP #: _____ Desc: _____

COP #: _____ Type: _____

Manuf: _____ Locat: _____

Model #: _____ Vendor: _____

Serial #: _____ Doc. Ref: _____

DWG. Ref: _____ Assoc. Equip: _____

Size: _____ HP: _____

GPM: _____ PH/DC: _____

Temp: _____ Volts: _____

PSI: _____ Amps: _____

CFM: _____ RPM: _____

Output: _____ Power Ser: _____

Range: _____ Frame: _____

Order #: _____ Encl: _____

Electrical Data: _____

Mechanical Data: _____

Frequency	Week #	Work To Be Done
_____	_____	_____
_____	_____	_____
_____	_____	_____

MANUFACTURER'S INSTALLATION CERTIFICATION FORM

Contract No.: _____ Specification Section: _____

Equipment Name: _____

CONTRACTOR: _____

Manufacturer of Equipment Item: _____

The undersigned manufacturer of the equipment item described above hereby certifies that he has checked the installation of the equipment and that the equipment, as specified in the Contract Documents, has been provided in accordance with the manufacturer's recommendations, and that the trial operation of the equipment item has been satisfactory.

Comments: _____

_____

_____

_____

_____ _____

Date Manufacturer

_____

Signature of Authorized Representative

_____ _____

Date CONTRACTOR

_____

Signature of Authorized Representative

EQUIPMENT TEST REPORT FORM

NOTE: This example equipment test report is provided for the benefit of CONTRACTOR and is not specific to any piece of equipment to be installed as a part of this project. The example is furnished as a means of illustrating the level of detail required for the preparation of equipment test report forms for this project.

A.

CITY OF CHANDLER
RECLAIMED WATER INTERCONNECT FACILITY

_____ CONTRACTOR

EQUIPMENT/SYSTEM TEST REPORT

Equipment Name: _____
Equipment Number: _____
Specification Ref: _____
Location: _____
System: _____

	CONTRACTOR		ENGINEER	
	Verified	Date	Verified	Date
PREOPERATIONAL CHECKLIST				
Mechanical				
Lubrication.	_____	_____	_____	_____
Alignment.	_____	_____	_____	_____
Anchor bolts.	_____	_____	_____	_____
Seal water system operational.	_____	_____	_____	_____
Equipment rotates freely.	_____	_____	_____	_____
Safety guards.	_____	_____	_____	_____
Valves operational.	_____	_____	_____	_____
Hopper purge systems operational.	_____	_____	_____	_____
Sedimentation tank/hopper clean.	_____	_____	_____	_____
O&M Manual information complete.	_____	_____	_____	_____
Manufacturer's installation certificate complete.	_____	_____	_____	_____

	CONTRACTOR Verified	CONTRACTOR Date	ENGINEER Verified	ENGINEER Date
Electrical (circuit ring-out and high-pot tests)				
Circuits:				
Power to MCC __.				
Control to HOA.				
Indicators at MCC:				
Red (running).				
Green (power).				
Amber (auto).				
Indicators at local control panel.				
Wiring labels complete.				
Nameplates:				
MCC.				
Control station.				
Control panel.				
Equipment bumped for rotation.				
Piping Systems				
Cleaned and flushed:				
Suction.				
Discharge.				
Pressure tests.				
Temporary piping screens in place.				
Instrumentation and Controls				
Flowmeter FE_____ calibration				
Calibration Report No._____				
Flow recorder FR_____ calibrated against transmitter.				
VFD speed indicator calibrated against independent reference.				
Discharge overpressure shutdown switch calibration.				
Simulate discharge overpressure shutdown.				

	CONTRACTOR Verified	CONTRACTOR Date	ENGINEER Verified	ENGINEER Date

EQUIPMENT/SYSTEM PERFORMANCE TESTS

Mechanical

Motor operation temperature satisfactory.	_____	_____	_____	_____
Pump operating temperature satisfactory.	_____	_____	_____	_____
Unusual noise, etc?	_____	_____	_____	_____
Pump operation: 75 gpm/50 psig	_____	_____	_____	_____
Measurement:				
Flow _____				
Pressure _____ Test gage number _____				
Alignment hot.	_____	_____	_____	_____
Dowelled in.	_____	_____	_____	_____

Remarks: _____

_____

_____

Electrical

Local switch function:				
Runs in *HAND*	_____	_____	_____	_____
No control power in *OFF*	_____	_____	_____	_____
Timer control in *AUTO*	_____	_____	_____	_____
Overpressure protection switch PS_____ functional in both *HAND* and *AUTO*	_____	_____	_____	_____
Overpressure protection switch PS_____ set at 75 psig	_____	_____	_____	_____
PLC 2500 set at 24-hour cycle, 25 min *ON*	_____	_____	_____	_____

Equipment/System Performance Test Completed

Contractor _____ Date _____

Equipment/System Performance Test Accepted

Engineer _____ Date _____

OPERATION AND MAINTENANCE TRANSMITTAL FORM

Date: _____ Submittal No.: _____

To: Contract No.: _____

_____ Spec. Section: _____

_____ Submittal Description: _____

_____ From: _____

Attention: _____ _____

Checklist	CONTRACTOR		ENGINEER	
	Satisfactory	N/A	Accept	Deficient
1. Table of Contents				
2. Equipment forms				
3. Manufacturer information				
4. Vendor information				
5. Safety precautions				
6. Operator pre-start				
7. Start-up, shutdown, and post shutdown procedures				
8. Normal operations				
9. Emergency operations				
10. Operator service requirements				
11. Environmental conditions				
12. Lubrication data				
13. Preventive maintenance plan and schedule				
14. Troubleshooting guides and diagnostic techniques				
15. Wiring diagrams and control diagrams				
16. Maintenance and repair procedures				
17. Removal and replacement instructions				
18. Spare parts and supply list				
19. Corrective maintenance man-hours				
20. Parts identification				
21. Warranty information				
22. Personnel training requirements				
23. Testing equipment and special tool information				

Remarks: _____

_____
CONTRACTOR'S Signature

MANUFACTURER'S INSTRUCTION CERTIFICATION FORM

Contract No:_____Specification Section: _____ Equipment Name: _____

_____

CONTRACTOR: _____

Manufacturer of equipment item: _____

The undersigned manufacturer certifies that a service engineer has instructed the plant operating personnel in the proper maintenance and operation of the equipment designated herein.

Operations Check List (check appropriate spaces)

Start-up procedure reviewed.	_____
Shutdown procedure reviewed.	_____
Normal operation procedure reviewed.	_____
Others: _____	_____
_____	_____

Maintenance Check List (check appropriate spaces)

Described normal oil changes (frequency).	_____
Described special tools required.	_____
Described normal items to be reviewed for wear.	_____
Described preventive maintenance instructions.	_____
Described greasing frequency.	_____
Others: _____	_____
_____	_____

_____ _____

Date Manufacturer

_____

Signature of Authorized Representative

_____ _____

Date Signature of OWNER'S Representative

_____ _____

Date Signature of CONTRACTOR'S Representative

MOTOR DATA FORM

Equipment Name_____

Equipment No.(s) _____

Site Location _____

Nameplate Markings

Mfr _____ Mfr Model _____ Frame _____ HP____
Volts _____ Phase _____ RPM _____ Service factor ____
FLA _____ LRA _____ Freq _____ Amb temp rating _____degrees C
Time rating _____ Design letter _____
(NEMA MG1-10.35) (NEMA MG-1.16)

KVA code letter _____ Insulation class _____

The following information is required for explosionproof motors only:

A. Approved by UL for installation in Class _____, Div _____

B. UL frame temperature code _____; Group _____ Atmosphere _____
(NEC Tables 500-2 and 500-2(b))

The following information is required for all motors 1/2 horsepower and larger:

A. Guaranteed minimum efficiency _____
(Section 11000)

B. Nameplate or nominal efficiency _____

Data Not Necessarily Marked on Nameplate

Type of enclosure _____ Enclosure material_____

Temp rise _____degrees C (NEMA MG1-12.41,42)

Space heater included?_____ Yes _____ No; if Yes, _____watts _____volts

Type of motor winding overtemperature protection, if specified: _____

Use the space below to provide additional information on other motor modifications, if specified:

_____

_____

WIRE AND CABLE RESISTANCE TEST DATA FORM

Wire or Cable No.:_____ Temperature, °F _____

Location of Test	Insulation resistance, megohms
1. _____	_____
2. _____	_____
3. _____	_____
4. _____	_____
5. _____	_____
6. _____	_____
7. _____	_____

CERTIFIED _____ Date_____
CONTRACTOR'S Representative

WITNESSED _____ Date_____
OWNER'S Representative

INSTALLED MOTOR TEST DATA FORM

Motor Equipment Number _____ Date of test _____

Equipment Driven _____

MCC Location _____ Ambient temp _____ºF

Resistance:

Insulation resistance phase-to-ground megohms:

Phase A _____, Phase B _____, Phase C _____

Current at Full Load:

Phase _____ Current, amps _____

Phase _____ Current, amps _____

Phase _____ Current, amps _____

Thermal Overload Device: Manufacturer/catalog # _____ Amperes _____

Circuit breaker (MCP) setting: _____

Motor Nameplate Markings:

Mfr _____ Mfr type _____ Frame _____ HP_____

Volts _____ Phase _____ RPM _____ **Service factor _____

Amps _____ Freq _____ Ambient temp rating _____ ºC

Time rating _____ **Design letter _____
(NEMA 1-10.35) (NEMA MG-1.16)

Code letter _____ Insulation class _____

**Required for 3-phase squirrel cage induction motors only.

CERTIFIED _____ Date_____
CONTRACTOR'S Representative

WITNESSED _____ Date_____
OWNER'S Representative

DRY TRANSFORMER TEST DATA FORM

Equipment No. _____ Temperature _____

Location _____

Winding: Primary _____ Secondary_____

A. INSULATION-RESISTANCE TEST:
The test shall be made with a megohmmeter at the test voltage for a period of 1 minute.

Voltage rating	Test voltage	Test results (megohms) Phase	Phase
0-600	1000	A-GRD ____	A-B ____
601-5000	2500	B-GRD ____	B-C ____
5000+	5000	C-GRD ____	C-A ____

Resistance readings less than the manufacturer's recommended value or less than 10 megohms shall be brought to the attention of the ENGINEER.

B. DIELECTRIC-ABSORPTION TEST:
The test shall be made with a megohmmeter at the test voltage for a period of 10 minutes.

1. TEST RESULTS: (megohms)

Phase	Phase
A-GRD ____	A-B _____
B-GRD ____	B-C _____
C-GRD ____	C-A _____

2. POLARIZATION INDEX:

$$\frac{10\ minute\ reading}{1\ minute\ reading} = polarization\ index$$

(from Paragraph "A" above)

Phase	Phase
A-GRD ____	A-B ____
B-GRD ____	B-C ____
C-GRD ____	C-A ____

Polarization index values less than two shall be brought to the attention of the ENGINEER.

CERTIFIED _____ Date_____
CONTRACTOR'S Representative

WITNESSED _____ Date_____
OWNER'S Representative

MOTOR CONTROL CENTER TEST FORM

Equipment No. _____ Ambient room temperature _____

Location _____

A. MECHANICAL CHECK:

1. All bolted connections either bus to bus or cable to bus shall be torqued to the manufacturer's recommendations.

B. ELECTRICAL TESTS:

1. Measure insulation resistance of each bus section phase to phase and phase to ground for one minute using a megohmmeter at 1000 volts.

	Test results (megohms)	
Phase		Phase
A-GRD	_____	A-B ___
B-GRD	_____	B-C ___
C-GRD	_____	C-A ___

2. Set the circuit breaker in the starter unit to comply with the requirements of NEC, Article 430-52 and Table 430-152.

3. Motor overload heater elements shall be sized and installed based on the actual nameplate full load amperes of the motor connected to the starter.

CERTIFIED _____ Date_____
CONTRACTOR'S Representative

WITNESSED _____ Date_____
OWNER'S Representative

MEDIUM VOLTAGE MOTOR STARTER TEST FORM

Equipment No. _____

Location _____

Room Temperature _____

A. The protective devices shall be set in accordance with the specification before the tests are performed.

1. Measure contact resistance (micro-ohms)
   Phase: A_____ B_____ C _____

   Contacts shall be replaced if resistance exceeds 50 micro-ohms.

2. Perform an insulation resistance test (1000 volts DC for 1 minute).

Phase	A	B	C	
Pole to ground	___	___	___	megohms
Across open pole	___	___	___	megohms
Pole to pole	AB_____	BC_____	CA_____	megohms

3. Perform minimum pickup voltage tests on trip and close coils.

4. Motor RTDs shall be tested by using a hot oil bath. The temperature at which the sensor trips shall be recorded for each RTD.

5. The Contactor shall be tripped by operation of each protective device.

CERTIFIED _____ Date_____
CONTRACTOR'S Representative

WITNESSED _____ Date_____
OWNER'S Representative

MEDIUM VOLTAGE SWITCHGEAR TEST FORM

Equipment No. _____

Location _____

Room Temperature _____

A. The protective devices shall be set in accordance with the specification before the tests are performed.

1. Measure contact resistance (micro-ohms)
   Phase: A____ B____ C _____

   Contacts shall be replaced if resistance exceeds 50 micro-ohms.

2. Perform an insulation resistance test (1000 volts DC for 1 minute).

Phase	A	B	C	
Pole to ground	___	___	___	megohms
Across open pole	___	___	___	megohms
Pole to pole	AB___	BC___	CA___	megohms

3. Perform minimum pickup voltage tests on trip and close coils.

4. Verify the instrument transformer ratios. Check the transformer's polarity electrically.

5. The Contactor shall be tripped by operation of each protective device.

CERTIFIED _____ Date_____
CONTRACTOR'S Representative

WITNESSED _____ Date_____
OWNER'S Representative

PROTECTIVE RELAY TEST FORM

Location _____

Switchgear Breaker No. _____

Protective Relay Description _____

A. The protective relays shall be tested in the following manner:

1. Each protective relay circuit shall have its insulation resistance tested to ground.

2. Perform the following tests on the specified relay setting:

a. Pickup parameters on each operating element.

b Timing test shall be performed at three points on the time dial curve.

c. Pickup target and seal-in units.

B. The results shall be recorded and signed by CONTRACTOR. A copy shall be provided to the ENGINEER.

CERTIFIED _____ Date _____
CONTRACTOR'S Representative

WITNESSED _____ Date _____
OWNER'S Representative

LOW VOLTAGE SWITCHGEAR TEST FORM

Equipment No. _____

Location _____

Room Temperature _____

A. The protective devices shall be set in accordance with the specification before the tests are performed.

1. Measure contact resistance (micro-ohms)

   Phase: A_____ B_____ C_____
   Contacts shall be replaced if resistance exceeds 50 micro-ohms.

2. Perform an insulation resistance test (1000 volts DC for 1 minute).

Phase	A	B	C	
Pole to ground	___	___	____	megohms
Across open pole	___	___	____	megohms
Pole to pole	AB ___	BC ___	CA __	megohms

3. Minimum pickup current shall be determined by primary current injection.

4. Long time delay shall be determined by primary injection at 300% pickup current.

5. Short time pickup and time delay shall be determined by primary injection of current.

6. Instantaneous pickup current shall be determined by primary injection.

7. Trip unit reset characteristics shall be verified.

8. Auxiliary protective devices, such as ground fault or under voltage relays, shall be activated to ensure operation of shunt trip devices.

CERTIFIED _____ Date_____
CONTRACTOR'S Representative

WITNESSED _____ Date_____
OWNER'S Representative

MEDIUM VOLTAGE LOAD INTERRUPTER SWITCH TEST FORM

Equipment Number _____

Location _____

Date _____

1. Measure switch blade resistance (micro-ohms).

   Phase: A_____ B_____ C_____

Contacts shall be replaced if resistance exceeds 50 micro-ohms.

2. Perform an insulation resistance test (1000 volts DC for 1 minute).

Phase	A	B	C
Pole to ground	___	___	___ megohms
Across open pole	___	___	___ megohms
Pole to pole	AB___	BC ___	CA ___ megohms

The results shall be recorded and signed. A copy shall be provided to the ENGINEER.

CERTIFIED _____ Date_____
CONTRACTOR'S Representative

WITNESSED _____ Date_____
OWNER'S Representative

LIQUID-FILLED TRANSFORMER TEST FORM

Equipment Number _____

Location _____

Date/Weather Conditions _____

A. Perform the "Insulation-Resistance Test" and "Dielectric Absorption Test" using Dry Transformer Test Data Form.

B. Perform an applied voltage (low frequency dielectric) test in accordance with ANSI C57.12.90, Paragraph 10.5, Applied Voltage Test. Applied voltage levels shall be 75% of recommended factory test levels or recommended test levels of ANSI C57.12.00, Table 5.

C. Insulating oil shall be sampled and shall be laboratory tested for the following:

1. Dielectric strength.
2. Acid neutralization.
3. Interfacial tension.
4. Color.
5. Power factor.

D. Perform a turns ratio test between the windings for all tap positions.

E. The temperature and pressure switches shall be tested using a hot oil bath and air pump.

F. The results shall be recorded and signed by CONTRACTOR and ENGINEER. A copy shall be provided to the ENGINEER. Any readings which are abnormal to ANSI industry standards shall be reported to the ENGINEER.

CERTIFIED _____ Date _____
CONTRACTOR'S Representative

WITNESSED _____ Date _____
OWNER'S Representative

AUTOMATIC TRANSFER SWITCH TEST FORM

Equipment Number _____

Location _____

Date _____

1. Perform an insulation resistance test (1000 volts DC for 1 minute):

	Phase A	Phase B	Phase C	
Pole to ground	___	___	___	megohms
Pole to pole	AB___	BC___	CA___	megohms

2. Perform the following operations and initial:

   a. Manual transfer _____

   b. Loss of normal power; ___sec delay

   c. Return to normal power; ___sec delay

   The results shall be recorded and signed. A copy shall be provided to the ENGINEER.

CERTIFIED _____ Date_____
CONTRACTOR'S Representative

WITNESSED _____ Date_____
OWNER'S Representative

NEUTRAL GROUNDING RESISTOR TEST

Equipment No.: _____

Location: _____

Date: _____

A. The pickup and time delay setting on the ground fault relay shall be set in accordance with Division 16 Specifications.

1. The transformer neutral insulation resistance shall be measured with and without the grounding resistor connected to insure no parallel ground paths exist.

2. The protective relay pickup current shall be determined by injecting test current into the current sensor. The pickup current should be within ten percent of the dial setting. Record the dial setting and actual pickup tie.

3. The relay timing shall be tested by injecting 150% and 300% of pickup current into the current sensor. The relay timing shall be in accordance with the manufacturer's published time-current characteristic curves. Record the relay timing at 150% and 300% of pickup current.

4. The circuit interrupting device shall be operated by operating the relay.

B. The results shall be recorded and signed by the CONTRACTOR and ENGINEER.

CERTIFIED _____ Date _____
CONTRACTOR'S Representative

WITNESSED _____ Date _____
OWNER'S Representative

LOOP WIRING AND INSULATION RESISTANCE TEST DATA FORM

Loop No.:_____

List all wiring associated with a loop in table below. Make applicable measurements as indicated after disconnecting wiring.

			Continuity Resistance[1]		Insulation Resistance[2]			
Wire No.	Panel Tie	Field TB	Cond./ Cond.	Cond./ Shield	Shield/ Gnd.	Shield/ Cond.	Cond./ Gnd.	Shield/ Shield
A	____	____	--	(A/SH)	_____	_____	_____	_____
B	____	____	(A/B)	--	_____	_____	_____	_____
C	____	____	(A/C)	--	_____	_____	_____	_____
D	____	____	(A/D)	--	_____	_____	_____	_____
etc	____	____						

[1] Continuity Test. Connect ohmmeter leads between wires A and B and jumper opposite ends together. Record resistance in table. Repeat procedure between A and C, A and D, etc. Any deviation of ±2 ohms between any reading and the average of a particular run indicates a poor conductor, and corrective action shall be taken before continuing with the loop test.

[2] Insulation Test. Connect one end of a 500 volt megger to the panel ground bus and the other sequentially to each completely disconnected wire and shield. Test the insulation resistance and record each reading.

CERTIFIED _____ Date_____
CONTRACTOR'S Representative

WITNESSED _____ Date_____
OWNER'S Representative

CONTROL CIRCUIT PIPING LEAK TEST FORM

Loop No.:_____

List tubing associated with loop in table below. Make applicable measurements after isolating any air consuming pilots from circuit.

Tube No.	Tubing Equivalent Length of 1/4-Inch Copper[1]	Test Period (seconds)	Permitted Pressure Drop (psi)[2]	Measured Pressure Drop (psi)
A	_____	_____	_____	_____
B	_____	_____	_____	_____
C	_____	_____	_____	_____
D	_____	_____	_____	_____
Etc.	_____	_____	_____	_____

[1] Convert actual tubing and air motor volume to equivalent 1/4-inch copper tubing.

[2] Pressure drop shall not exceed 1 psi per hundred feet 1/4-inch tubing per 5 seconds.

CERTIFIED _____ Date_____
CONTRACTOR'S Representative

WITNESSED _____ Date_____
OWNER'S Representative

CONTROLLER CALIBRATION TEST DATA FORM

Tag No. and Description: _____

Make and Model No.:_____ Serial No.:_____

Input:_____ Process Variable (PV) Scale: _____

Output:_____ Output Scale: _____

PV Scale Calibration

% of Range	Input	Expected Reading	Actual Reading	% Deviation
0	_____	_____	_____	_____
50	_____	_____	_____	_____
100	_____	_____	_____	_____

% Deviation Allowed: _____

Connect output to PV for following tests:

	Set Point (SP) Indicator Accuracy		Output Meter Accuracy			Controller Accuracy		
SP	PV Reading	Expected % Dev.	Actual Reading	Expected Reading	Actual % Dev.	Output	Output	% Dev.
(0%)	_____	_____	_____	_____	_____	_____	_____	_____
(50%)	_____	_____	_____	_____	_____	_____	_____	_____
(100%)	_____	_____	_____	_____	_____	_____	_____	_____

%Dev. Allowed: _____ % Dev. Allowed:_____ % Dev. Allowed:_____

CERTIFIED _____ Date_____
CONTRACTOR'S Representative

WITNESSED _____ Date_____
OWNER'S Representative

PANEL INDICATOR CALIBRATION TEST DATA FORM

Tag No. and Description: _____

Make and Model No.: _____ Serial No.: _____

Input: _____

Scale: _____ Range: _____

PV Scale Calibration

% of Range	Input	Expected Reading	Actual Reading	% Deviation
0	_____	_____	_____	_____
50	_____	_____	_____	_____
100	_____	_____	_____	_____

% Deviation Allowed: _____

CERTIFIED _____ Date _____
CONTRACTOR'S Representative

WITNESSED _____ Date _____
OWNER'S Representative

RECORDER CALIBRATION TEST DATA FORM

Tag No. and Description: _____

Make and Model No.:_____ Serial No.: _____

Input:_____ Chart: _____

Scale:_____ Range:_____

% of Range	Input	Expected Reading	Actual Reading	% Deviation
0	_____	_____	_____	_____
50	_____	_____	_____	_____
100	_____	_____	_____	_____

% Deviation Allowed:_____

CERTIFIED _____ Date_____
CONTRACTOR'S Representative

WITNESSED _____ Date_____
OWNER'S Representative

SIGNAL TRIP CALIBRATION TEST DATA FORM

Tag No. and Description: _____

Make and Model No.:_____ Serial No.: _____

Input:_____

Scale:_____ Range:_____

Set Point(s):_____

After setting set point(s), run signal input through entire range and calculate deadband.

Set Point	Incr. Input Trip Point	Decr. Input Trip Point	Calc. Deadband	Required Deadband
_____	_____	_____	_____	_____
_____	_____	_____	_____	_____
_____	_____	_____	_____	_____

CERTIFIED _____ Date_____
CONTRACTOR'S Representative

WITNESSED _____ Date_____
OWNER'S Representative

FIELD SWITCH CALIBRATION TEST DATA FORM

Tag No. and Description: _____

Make and Model No.:_____ Serial No: _____

Input:_____

Range:_____

Set Point(s):_____

Simulate process variable (flow, pressure, temperature, etc.) and set desired set point(s). Run through entire range of switch and calculate deadband.

Set Point	Incr. Input Trip Point	Decr. Input Trip Point	Calc. Deadband	Required Deadband
_____	_____	_____	_____	_____
_____	_____	_____	_____	_____
_____	_____	_____	_____	_____

CERTIFIED _____ Date_____
CONTRACTOR'S Representative

WITNESSED _____ Date_____
OWNER'S Representative

TRANSMITTER CALIBRATION TEST DATA FORM

Tag No. and Description: _____

Make and Model No.: _____ Serial No.: _____

Input: _____

Output: _____

Range: _____ Scale: _____

Simulate process variable (flow, pressure, temperature, etc.) and measure output with appropriate meter.

% of Range	Input	Output	Expected Output	Actual Output	% Deviation
0	_____	_____	_____		_____
50	_____	_____	_____		_____
100	_____	_____	_____		_____

% Deviation Allowed: _____

CERTIFIED _____ Date _____
CONTRACTOR'S Representative

WITNESSED _____ Date _____
OWNER'S Representative

MISCELLANEOUS INSTRUMENT CALIBRATION TEST DATA FORM

(For instruments not covered by any of the preceding test forms, CONTRACTOR shall create a form containing all necessary information and calibration procedures.)

CERTIFIED _____ Date _____
CONTRACTOR'S Representative

WITNESSED _____ Date _____
OWNER'S Representative

INDIVIDUAL LOOP TEST DATA FORM

Loop No.:_____

Description: (Give complete description of loop's function using tag numbers where appropriate.)

P&ID No.: (Attach copy of P&ID.)

a. Wiring tested:

b. Instrumentation tubing/piping tested:

c. Instruments calibrated:

d. List step-by-step procedures for testing loop parameters. Test loop with instruments, including transmitters and control valves, connected and functioning. If it is not possible to produce a real process variable, then a simulated signal may be used with the ENGINEER'S approval.

CERTIFIED _____ Date_____
CONTRACTOR'S Representative

WITNESSED _____ Date_____
OWNER'S Representative

LOOP COMMISSIONING TEST DATA FORM

Loop No.:_____

a. Loop tested:
(Attach Test Form 17007-J)

b. Controlled or connected equipment tests confirmed:

c. Give complete description of loop's interface with process.

d. With associated equipment and process in operation, provide annotated chart trace of loop response to changes in set points for verification of performance. This chart should demonstrate 1/4-amplitude damping as output adjusts to set point change. Show set points, starting and finishing times on chart, as well as any other pertinent data.

Connect 2-pen recorder to process variable (PV) and to controller output. Use 1 inch/second chart speed.
Pen 1 - PV - Connections:
Pen 2 - Output - Connections:

CERTIFIED _____ Date_____
CONTRACTOR'S Representative

WITNESSED _____ Date_____
OWNER'S Representative

CITY OF CHANDLER
RECLAIMED WATER INTERCONNECT FACILITY

PIPE TEST REPORT

CONTRACTOR: _____ DATE: _____

PIPING SYSTEM: _____

LOCATION: _____

REF. DRAWING NO.: _____

PIPE MATERIAL	PIPE JOINT	PIPE SIZE	TOTAL LENGTH TESTED	TEST PRESSURE	TEST TIME	ALLOW LOSS

ALLOWABLE LOSS FORMULA: _____

TYPE OF TEST: WATER _____ AIR _____ OTHER _____

TIME TEST STARTED: _____ STARTING TEST PRESSURE: _____

TOTAL TIME: _____ ACTUAL LOSS: _____

ACCEPTED: _____ REJECTED: _____

COMMENTS: _____

_____

_____

CONTRACTOR REPRESENTATIVE : _____
(NAME) (DATE)

ENGINEER REPRESENTATIVE: _____
(NAME) (DATE)

++ END OF SECTION ++

SECTION 01310

PROGRESS SCHEDULE

PART 1 - GENERAL

1.1 SUMMARY

A. To assure completion of the Work within the Contract times established, all activities of the CONTRACTOR shall be scheduled and monitored by use of a CPM (Critical Path Method) Schedule. The CONTRACTOR shall provide a CPM Schedule for Work done under this Contract in accordance with the requirements of this Section and the General Conditions.

B. The CONTRACTOR shall employ or retain services of at least one person experienced in CPM Scheduling for the duration of the Contract. This person shall cooperate with the ENGINEER and shall update the CONTRACTOR'S schedule as required by these Specifications.

C. A preliminary CPM Schedule for the entire Project shall be submitted to the ENGINEER at the Pre-construction Conference in bar chart forms. The bar chart shall be referenced to time.

D. At the Pre-construction Conference, the CONTRACTOR shall furnish to the ENGINEER a detailed preliminary CPM Schedule in bar chart form showing the CONTRACTOR'S proposed operations for the first four (4) months of the Contract period.

E. The CONTRACTOR shall submit, at the Pre-construction Conference a projection of estimated monthly payments through the life of the Contract. Initial projections shall be correlated with and provided at the same time as the Schedule of Values. Projections shall be updated when requested by the ENGINEER.

1.2 DEFINITIONS

A. Unless otherwise noted, terms shall be defined for this Project as follows:
   1. Activity - means a component step or operation in the construction of Work.
   2. Event - means a point in time during construction of the Work.
   3. Network or Network Diagram - means a flow diagram which is a symbolic representation of activities and events that must be performed in accordance with the Contract and which shows the order and interdependence of activities and the sequence in which Work is to be accomplished as planned by the CONTRACTOR.
   4. Earliest Start Date - means the earliest date on which an activity can start.

5. Earliest Finish Date - means the earliest date on which an activity can finish without changing the Contract duration.
6. Latest Start Date - means the latest date on which an activity can start without changing the Contract duration.
7. Latest Finish Date - means the latest date on which an activity can finish without changing the Contract duration.
8. Latest Free Start Date - means the latest date on which an activity can start without affecting the scheduling of any other activities.
9. Latest Free Finish Date - means the latest date on which an activity can finish without affecting the scheduling of any other activities.
10. Total Float - means the number of calendar days by which an activity can be delayed without necessarily extended a pertinent Contract Time. Total Float is by definition at least equal to Contract Float.
11. Contract Float - If the schedule anticipates early completion of all or any part of the Work, Contract Float is the number of calendar days between CONTRACTOR'S anticipated date for early completion of all or any such part of the Work and the corresponding specified Contract Time.
12. Free Float - means the amount of time in calendar days by which an activity can be delayed without affecting the scheduling of any other activity.
13. Duration - means the amount of time in consecutive calendar days required to perform an activity from the date on which Work commences on the activity to the date on which the activity is complete.
14. Milestone - means a significant event such as date of Notice to Proceed, Substantial Completion, Final Completion, and specified mandatory completion dates when portions of the Work or site are to be turned over to the OWNER or other contractors.
15. Critical Path - means the continuous sequence of activities and events throughout the network that comprises the longest time path through the network from start to finish.
16. Critical Activity - means an activity which cannot be delayed without altering the Contract Times.
17. Mandatory Date - means the date specified for completion of a Work activity or when other contractors must be permitted to start Work.
18. Sub-network - means a network relating to a particular phase, portion, or subdivision of the Work.
19. Arrow Method - means that method of network diagram construction in which activities are represented by arrows.
20. Lag - means the amount of time between the commencement of an activity and the commencement of an activity which immediately follows it, expressed in the number of calendar days.
21. Lag Factor - means the amount of time between the commencement of an activity and the commencement of an activity which immediately follows it, expressed as a percentage of the duration of the first activity.

1.3 SUBMITTALS

A. All CPM Schedules (both original and revisions) shall be submitted per requirements of Specification 01300, Submittals. Each CPM Schedule submittal shall bear CONTRACTOR'S stamp or written indication of approval as representative to OWNER that CONTRACTOR has determined or verified all data on that CPM Schedule, and that CONTRACTOR and the subcontractors and suppliers have reviewed and coordinated the sequences in that CPM Schedule with the requirements of the work.

B. At the Pre-construction Conference, the CONTRACTOR shall submit to the OWNER and ENGINEER sufficient descriptive information about the CPM software the CONTRACTOR has chosen to employ to comply with the requirements of this Section.

C. Neither the OWNER'S or ENGINEER'S review of a CPM Schedule, nor a statement of "Resubmittal Not Required", will relieve the CONTRACTOR from responsibility for complying with the Contract Times and those sequences of Work indicated in or required by the Contract Documents, or completing any Work omitted from that Progress Schedule within the Contract Times. The CONTRACTOR shall make appropriate adjustments or corrections in a CPM Schedule returned as "Revise and Resubmit" and shall submit to the ENGINEER the corresponding CPM Schedule resubmittal as required herein. CPM Schedule resubmittals shall use the same revision number followed by the letters "A", "B", etc., as applicable.
   1. CONTRACTOR shall submit to ENGINEER with the first Application for Payment, the initial progress schedule, and the schedule of Shop Drawing and sample submittals. CONTRACTOR shall correct all schedules returned for revision and resubmission, taking into account comments made by OWNER and ENGINEER and shall resubmit any schedule if directed by ENGINEER. The final revision of the schedule shall be the As Planned Schedule from which subsequent schedules revisions shall be developed and used by CONTRACTOR when making proposals or claims for adjustments in Contract Time or Contract Price.
   2. Early dates in the progress schedule shall be based on proceeding with all or part of the Work exactly on the date when the corresponding Contract Time commences to run. Late dates shall be based on completing all or part of the Work exactly on the corresponding Contract Time, regardless of whether CONTRACTOR anticipates early completion. If sequences of Work are imposed by the Contract Documents, the progress schedule shall show in detail CONTRACTOR'S approach to conforming with those sequences.
   3. Progress schedule revisions submitted shall (a) adequately depict CONTRACTOR'S current approach to remaining Work, (b) report on progress or schedule recovery actions, and (c) facilitate evaluation of progress payments, and (d) accurately depict the progress and sequence of the Work to date.

D. Shop Drawings: Submit for approval the following:
   1. A copy of this specification section, with addendum updates included, and all referenced and applicable sections, with addendum updates included, with each paragraph check-marked to indicate specification compliance or marked to indicate requested deviations from specification requirements. Check marks (✓) shall denote full compliance with a paragraph as a whole. If deviations from the specifications are indicated, and therefore requested by the CONTRACTOR, each deviation shall be underlined and denoted by a number in the margin to the right of the identified paragraph, referenced to a detailed written explanation of the reasons for requesting the deviation. The ENGINEER shall be the final authority for determining acceptability of requested deviations. The CONTRACTOR shall furnish equipment and/or services as specified if an exception and/or deviation is rejected. The remaining portions of the paragraph not underlined will signify compliance on the part of the CONTRACTOR with the specifications. Failure to include a copy of the marked-up specification sections, along with justification(s) for any requested deviations to the specification requirements, with the submittal shall be sufficient cause for rejection of the entire submittal with no further consideration.
   2. The CONTRACTOR shall submit the preventive maintenance information package as part of the shop drawing submittal package to the ENGINEER for review and approval. **SHOP DRAWING SUBMITTAL PACKAGE WILL NOT BE APPROVED WITHOUT ACCEPTANCE OF PREVENTIVE MAINTENANCE INFORMATION.**

PART 2 - PRODUCTS (NOT USED)

PART 3 - EXECUTION

3.1 MONTHLY PROGRESS REPORTS

A. On the first working day (or as otherwise scheduled) of each month, the CONTRACTOR shall meet with the ENGINEER and present, in duplicate, a report of his operations during the preceding month, including actual starting and ending dates on activities shown on the network diagram. Where such starting or ending dates were delayed beyond those required by the CPM Schedule, the CONTRACTOR shall describe the action he is taking to regain lost time and state the anticipated completion dates of subsequent activities affected by the delayed items. He shall also point out known or anticipated delays on continuing activities and outline the action he is taking to regain lost time, or avoid future delays, and state the anticipated completion dates of subsequent activities affected by the delayed items. On the basis of the reports presented at the meeting, the CONTRACTOR will develop a revised mathematical analysis, bar chart and narrative report, and will furnish eight copies therefore to the ENGINEER not later than the fifth working day

of the month. The updated Bar Chart shall detail one-month window in the CPM Schedule. Each activity covering Work at the site shall reflect the Work of a specific crew, span 15 Business Days or less, and indicate which CPM Schedule Activity includes the same Work. Activities covering Submittals and the procurement of items of materials or equipment shall segregate the time required for preparation of Submittals, review and return of Submittals, and fabrication and delivery, as applicable, and shall not combine items furnished by separate suppliers (first and second tiers).

B. Updated mathematical analyses shall include the information included in the initial submittal and the following additional information:
   1. Actual start date of activities which have been started by calendar date.
   2. Actual finish date of activities which have been completed by calendar date.
   3. Actual number of days worked on activities which have been completed.
   4. Percentage completion of activities which have been started.
   5. Actual dates on which attained Milestones were achieved.
   6. Additions or deletions of activities or events since the previous report.
   7. Changes in sequence or estimated duration of activities.
   8. Where progress along any path is behind schedule such that activities lying on the path are delayed by an amount greater than their initial Total Float, the Total Float shall show as a negative value.

C. The updated bar chart shall be a revision of the initial accepted bar chart based upon the updated mathematical analysis and shall show changes from the initial bar chart.

D. The updated narrative report shall be based upon the initial narrative report and shall describe in detail any revisions, either current or forecast, to information submitted with the initial narrative reports, together with a description of current and anticipated problems and delaying factors affecting progress of the Work, their impact on progress of the Work, and an explanation of corrective actions taken or proposed. The narrative shall, at a minimum, compare current Late Dates vs. Contract Times and Milestone Times; provide sufficient detail to allow objective verification of the progress of the Work; identify the assumptions made and activities affected in incorporating Work involved in Change Orders; describe actual or potential delays and their extent, related causes and the steps taken or anticipated to mitigate their impact; and itemize any revisions, and their bases, made in CPM Schedule activities and sequences.

3.2 REVISION OF NETWORK DIAGRAM

A. Unless the ENGINEER direct otherwise, the network diagram shall be revised every three months during the duration of the Project to reflect departures and changes from the previous network diagram. The revised network diagram shall be furnished to the ENGINEER with the corresponding Application for Payment. Each submittal shall consist of the required copies of the updated CPM Schedule narrative.

1. Schedule Revisions shall be solely for the purpose of showing how the CONTRACTOR'S planning, scheduling, and execution of Work remaining demonstrate continued compliance with the Contract Times and those sequences of Work indicated in or required by the Contract Documents, and preparing schedule recovery plans. CPM Schedule Revisions shall accurately represent all changes, adjustments or updates in the sequencing and timing of Work remaining made or required to be made by the CONTRACTOR.
2. Schedule Revisions shall accurately portray how completed Work was performed and any delays and any other significant events experienced since the previous CPM Schedule Revision.
3. Schedule Revisions shall incorporate changes in ACTIVITIES and sequence agreed upon in previously authorized Change Orders.
4. The CONTRACTOR shall ensure that the CPM Schedule diagram accurately reflects for each Activity the "as-built" information shown on the pertinent documents, such as daily reports and Submittal logs (and in the later case, reflect dates for resubmissions and re-reviews). As a minimum, schedule as-built data shall include actual start dates (discounting early starts not representing true as-built conditions), remaining days of Work, percent complete, and actual finish dates (when the Activities were completed so that dependent Work could proceed).
5. The ENGINEER will return a CPM Schedule Revision Submittal with comments limited to the un-progressed portion within 20 days. If a re-submittal of a CPM Schedule Revision is required, the CONTRACTOR shall, within 10 days, submit the required copies of a corrected and adjusted CPM Schedule Revision. Once an issue of a CPM Schedule Revision is returned to the CONTRACTOR as "Re-submittal Not Required", with or without comments, it shall represent the most current CPM Schedule as of the date of the Revision, and it shall be the basis for monitoring of the CONTRACTOR'S performance and progress against Late Dates.
6. Each CPM Schedule Revisions Submittal shall include a statement signed by the CONTRACTOR certifying that the CONTRACTOR has not, as of the cut-off date of that CPM Schedule Revision, been delayed by any actions, of or failure to act by the OWNER or ENGINEER, except as otherwise specifically stated.

3.3 REPORTS

A. CPM Schedule reports shall include cost updates, written narratives, network logic diagrams, graphic bar tabular printouts, and graphic bar charts, in both detailed and summary format.

B. Network Diagrams shall legibly show the order and interdependence of activities, and the sequence in which the work is to be accomplished as planned by the CONTRACTOR.

C. Tabular printouts shall show one activity per line along with appropriate data for the purpose intended including various combinations of the following:
   1. Activity ID.
   2. Activity description.
   3. Preceding and succeeding activity identification and descriptions.
   4. Original duration (in calendar days).
   5. Revised duration (in calendar days).
   6. Days remaining (in calendar days).
   7. Percent complete.
   8. Earliest start date (by calendar date).
   9. Earliest finish date (by calendar date).
   10. Latest start date (by calendar date).
   11. Latest finish date (by calendar date).
   12. Actual start date (by calendar date).
   13. Actual finish date (by calendar date).
   14. Total Float.
   15. Free Float.

D. Activities shall include in addition to the construction activities, the submittal, review and approval of samples, manufacturers' data, and Shop Drawings, the procurement of materials and equipment, installation and testing.

E. Bar charts will be required for summary purposes to compare actual progress with baseline As-Planned Schedule.

F. The network diagram shall be made to a time schedule and shall show the order and interdependence of activities and sequence in which the Work is to be accomplished as planned by the CONTRACTOR. The diagram shall show how the start of a given activity is dependent upon completion of preceding activities and how its completion restricts the start of following activities. Float need not be shown on the network diagram.

G. The diagram shall be constructed in such a manner that sub-networks relating to particular phases or portions of the Work can be readily extracted or revised as required. Each sub-network shall show time allocations for Shop Drawing review and fabrication time in addition to work time. The network diagram shall show the following information related to the activities:
   1. Activity number or label if the precedence method of diagramming is being used or the preceding and following event numbers if the arrow method of diagramming is used.
   2. A brief description of the activity.
   3. Estimated duration in consecutive calendar days of each activity.
   4. If the precedence method of diagramming is being used, lags or lag factors may be used at the CONTRACTOR'S option.

5. All activities relating to the furnishing and performance of the Work shall be shown. Activities which are interdependent because of restrictions of available manpower or construction equipment shall be so shown.
6. In addition to construction activities, the diagram shall show the date of the Work authorization and mandatory completion dates.
7. Detail of information shall be such that duration times of activities shall span 40 calendar days or less with not over 2% of the activities exceeding these limits. The activities which comprise separate portions of the Work shall be separately identifiable by coding.
8. The network diagram shall be drawn on 11-inch by 17-inch size sheets with flow of activities generally from left to right. The critical path shall be clearly marked. Wherever possible, activities relating to a particular sub-network shall be grouped together on a single sheet.

H. Mathematical analysis of the network diagram shall be based on the network diagram and shall be a computer printout tabulating each activity and showing the following information for each activity:
1. Activity number or label if the precedence method of diagramming is being used or the preceding and following event numbers if the arrow method is being used.
2. Activity description.
3. Estimated duration in consecutive calendar days or each activity.
4. Earliest start date by calendar date.
5. Earliest finish date by calendar date.
6. Latest start date by calendar date.
7. Latest finish date by calendar date.
8. Latest free start date by calendar date.
9. Latest free finish date by calendar date.
10. Total Float.
11. Free Float.
12. Critical activities and activities on critical path shall be marked.
13. Earliest start and finish dates shall be regarded as CONTRACTOR'S scheduled start and finish dates.

I. Earliest start and finish dates shall be regarded as the CONTRACTOR'S scheduled start and finish dates.

J. The bar chart shall be based on the network diagram and mathematical analysis. Related activities may be grouped together into a single item. However, the completed bar chart shall consist of not less than 50 items. The length of each bar shall correspond to the net aggregate durations of activities represented by the bar. Portions of bars which represent critical activities shall be marked. Bars shall be broken during extended periods of no work such as shutdowns for inclement weather.
1. The bar chart shall be drawn on 11-inch by 17-inch size sheets showing the total Contract duration in months. Bars representing related activities for any given portion of the Work shall be grouped together and a descriptive title shall be

shown for each bar. A list of all activities represented by each bar shall be included with the bar charts.

K. The narrative report shall describe in detail, but not be limited to, the CONTRACTOR'S proposed methods of carrying out each phase or portion of the Work together with the number of personnel, number of shifts, hours per shift, work week, and the number, size and type of major pieces of construction equipment required for the work. The report shall include a charge showing the CONTRACTOR'S estimated monthly earnings and accumulated earnings.

L. Except where directed in writing by the OWNER, the CONTRACTOR shall promptly take appropriate action to recover schedule whenever the CONTRACTOR fails to achieve a Contract Time or Milestone Time or perform Activities within the Late Dates in the most current revision of the CPM Schedule, or the CONTRACTOR'S progress falls behind that required to comply with that Contract Time, Milestone Time, or Late Dates. The CONTRACTOR shall submit with the Application for Payment following recognition of the problem a schedule recovery plan describing the cause of schedule slippage or delayed progress and the actions taken to correct them within the shortest reasonable time.

M. Appropriate schedule recovery actions may include, but not be limited to, assignment of additional labor, subcontractors, or construction equipment, Work during other than normal working hours (subject to the requirements of Article 8 of the General Conditions), expediting of Submittals or deliveries, or any combination of any of them. Overlapping or re-sequencing of Activities to increase activity concurrence shall be appropriate only if properly substantiated in the schedule recovery plan.

N. The CONTRACTOR'S failure, refusal or neglect to (a) submit a schedule recovery plan furnishing sufficient and convincing evidence that the CONTRACTOR can recover schedule within the shortest reasonable time acceptable to the OWNER, or (b) take appropriate schedule recover action, shall be reasonable evidence that the CONTRACTOR is not prosecuting the Work with all due diligence and shall give sufficient basis to the OWNER to demand adequate, written assurance of performance under the General Conditions, withhold from any payment an amount based on the OWNER'S estimate of the liquidated damages that would become due because of the actual or anticipated late completion, and in the OWNER'S sole discretion, order alternate schedule recovery actions.

O. An extension in Contract Time or an increase in Contract Price arising from delays which postpone, extend or in any other manner alter the schedule or completion of all or part of the Work will not be granted unless the CONTRACTOR, through an analysis of a Schedule reflecting data as of the date prior to the origination of the delay, as designated in demonstrations that conditions justifying extensions in Contract Time or increases in Contract Price as provided in Articles 8 and 11 of the

General Conditions, have been met, and that analysis by the CONTRACTOR is verifiable by objective evaluation.

P. A version of the As-Planned Schedule shall accurately show (a) all work progress (by the cut-off date) and any delays and any other significant events experienced before the cut-off date, and (b) any changed in Activities and sequences agreed upon in previously authorized Change Orders considering the proper records and all valid data provided under the requirements of Paragraphs 3.2 A.2.and 3.2 A.3., respectively. Any such As-Planned Schedule shall purposely exclude all Activity and sequencing changes initiated by the CONTRACTOR that affect Work after the cut-off date (whenever incorporated into any contemporaneous CPM Schedule Revisions under the requirements of Paragraph 3. 2 A.1. or otherwise), until the timing and sequences suggested by those changes actually take place.

Q. The ENGINEER may refuse to recommend any part of the payment if, in the ENGINEER'S judgment, the CONTRACTOR'S failure, refusal or neglect to provide the required CPM Schedule information precludes a proper evaluation of the CONTRACTOR'S progress. The OWNER may withhold a set-off from any payment recommended by the ENGINEER, if in the OWNER'S judgment, the CONTRACTOR'S failure, refusal or neglect to provide the required CPM Schedule information precludes a proper evaluation of whether the CONTRACTOR is prosecuting the Work, or any separable part of the Work, with all due diligence or not.

++ END OF SECTION ++

SECTION 01380

CONSTRUCTION PHOTOGRAPHS

PART 1 - GENERAL

1.1 SUMMARY

A. Pre-construction Video:
   1. The CONTRACTOR shall furnish a pre-construction video recording of the entire Project site showing the existing condition of all pavement, concrete, piping, equipment, structures, landscaping, building, and other site features. The video shall be provided electronically shall be submitted through box or Procure to the ENGINEER and approved prior to mobilization or initiating any construction activities. The CONTRACTOR shall notify the ENGINEER at least 48 hours prior to making the recording so that the ENGINEER may accompany the recorder.

B. Ground Level Construction Photographs:
   1. The minimum number of color digital photographs required will be 200 per month.
   2. Take a minimum of 200 color digital photographs of the completed or substantially completed Work at Project Completion. These photographs shall be submitted with the Final Application for Payment. These photographs are not part of the photographs required under Paragraph 1.1 - B.1, above.
   3. The CONTRACTOR shall take color digital photographs daily of all underground work in progress; work being done that will be exposed above ground shall be photographed on a bi-weekly basis. Photographs shall be taken in such a way to include an area or directional landmark. A minimum of five overall general project photographs depicting the overall project activities shall be taken monthly. A photograph log shall be maintained throughout the project with the following information for each photo: photograph number, a brief description, date, job title, location or station of pipeline (if applicable), and direction of the view in the photograph. The CONTRACTOR shall submit a plan that illustrates how the photograph log will be organized for approval by the OWNER.
   4. ENGINEER will approve the views to be taken and select the time at which they will be taken. Views will vary depending on the Progress Schedule.
   5. Color digital photographs shall be taken and downloaded daily. Photos shall be grouped into folders and the folders shall be named with the date they were taken and a brief description of the photo subject. For example: '2016-01-31 Roadway Demolition.'
   6. A minimum of 15 color digital photographs will be taken each time the photographer is at the site.

7. Submit aerial photographs of the site with Initial and Final Application for Payment. One oblique photograph shall be taken from each cardinal direction (North, South, East, and West). Provide 2 copies of each. One copy for the ENGINEERS use and the other to be turned over to the OWNER.

C. Aerial Construction Photographs:
   1. The CONTRACTOR shall engage a professional aerial photographer to photograph the site prior to construction mobilization, at monthly intervals during construction, and following final inspection. The photos shall be taken from two elevations, 1:6400 and 1:3600.
   2. The pilot must be well qualified, possessing a minimum of 250 hours of photographic map flying experience. The photographer shall possess a minimum of 250 hours of experience representing actual time spent in executing vertical aerial photography on photographic assignments. Oblique photography is also considered as qualifying experience.
   3. The airplane to be used shall be entirely capable of stable performance at the necessary altitude and air speeds, and shall be equipped with all essential navigational and photographic instruments and accessories, and all maintained in operational condition during the period of the contract. No windows shall be interposed between the camera lens system and the terrain. The camera lens system shall not be in the direct path of any gases or oil from the aircraft engines.

1.2 PHOTOGRAPH FORMAT

A. Furnish all photographs electronically.

B. Provide all digital photographs electronically through box or Procure. The file format shall be ".png". The digital photographs shall be provided in addition to the standard photographs required under Paragraph 1.1-B.2, above. Provide a file for all required under paragraphs 1.1-B.1 and 1.1-B.2.

C. Provide interior and exterior photographs of each buried structure prior to burial. Provide a minimum of four internal views and four external views of each structure. One view shall be provided of each wall, detail, floor and top of structure.

PART 2 - PRODUCTS (NOT USED)

PART 3 - EXECUTION

3.1 PROCEDURES

A. Requirements: Photographic exposures shall be taken during the construction period. The ENGINEER may vary the specified frequency so that significant progress or changes can be recorded on the photographs.

B. The ground level construction photographs shall be of aesthetic composition and shall depict the progress of the Work from the beginning of construction through and including the finished product and shall include, but not be limited to, the items listed in Section 01010, Summary of Work.

C. Ground-level construction photographs and aerial-construction photographs shall be submitted monthly shall be submitted with the application for payment. The Application for Payment shall not be reviewed and shall be returned to the CONTRACTOR as incomplete if the currently due photographs have not been submitted.

D. All buried piping above 4-inches shall be photographed prior to backfill. One photograph shall be taken at every 20 feet of length.

++ END OF SECTION ++

SECTION 01400

QUALITY CONTROL

PART 1 - GENERAL

1.1 SUMMARY

A. Provide quality control including field lining as specified herein.

1.2 RELATED SECTIONS

A. Section 01300, Submittals.

B. Section 01640, Materials and Equipment.

1.3 QUALIFICATIONS

A. Installation of materials and equipment shall be performed in a workmanlike manner by mechanics skilled in their particular trade.

B. The determination for the performance qualification is the responsibility of CONTRACTOR and each welder or welding operator shall be qualified by tests using equipment, procedures and a base metal and electrode or filler wire from the same compatible group number that will be encountered in the applicable procedure. Welders or welding operators who make acceptable procedure qualification test welds will be considered performance qualified for the welding procedures used. Performance qualification shall be determined in accordance with Section IX of the ASME Boiler and Pressure Vessel Code. Welders and welding operators qualified by another employer may be accepted as permitted by ANSI B31.1. ENGINEER shall be notified 24 hours in advance as to the time and place of tests and, wherever practical, the tests shall be performed at the Work site. ENGINEER shall be furnished a listing of the names and identification symbol as noted on the performance qualification test records to be used to identify the work performed by the welder or welding operator who after completing a welded joint shall identify it as his work by applying his assigned symbol for permanent record.

1.4 REGULATORY REQUIREMENTS

A. Unless indicated or specified otherwise, all materials and workmanship for the mechanical trades shall conform to the editions of the various standards, codes, manuals and specifications in effect on the date of advertisement for bids.

1.5 CERTIFICATIONS

A. Submittals of certifications of compliance from the CONTRACTOR or manufacturer required as specified for equipment in these documents shall be submitted to the ENGINEER as specified in Section 01300, Submittals.

1.6 FIELD TESTING

A. All testing called for in the Specifications shall be the responsibility of the CONTRACTOR.

1.7 SUPERVISION OF INSTALLATION BY MANUFACTURER

A. As required in the individual equipment specifications, an experienced, competent, and authorized factory representative of the equipment manufacturer shall visit the site of the work and inspect, check, adjust if necessary, and approve the equipment installation, and shall be present when the equipment is placed in operation. The equipment supplier's representative shall revisit the job site as often as necessary until any trouble is corrected and the equipment installation and operation is satisfactory to ENGINEER. The equipment supplier's representative shall furnish to ENGINEER, through CONTRACTOR a written report certifying that the equipment (1) has been properly installed and lubricated; (2) is in accurate alignment; (3) is free from any undue stress imposed by connecting piping or anchor bolts; and (4) has been operated under full load conditions and that it operated satisfactorily.

PART 2 - PRODUCTS (NOT USED)

PART 3 - EXECUTION

3.1 DEMONSTRATION

A. The CONTRACTOR shall demonstrate as, specified in Section 01650, Starting of Systems, to the satisfaction of the ENGINEER, OWNER and manufacturer's representative that all newly installed equipment operates in a satisfactory manner.

++ END OF SECTION ++

SECTION 01410

TESTING

PART 1 - GENERAL

1.1 SUMMARY

A. Testing:
   1. See Article 4.7.1 of the General Conditions for testing requirements and responsibilities. All Quality Control testing called for in the Specifications shall be the responsibility of the CONTRACTOR. Quality Assurance shall be by the ENGINEER. CONTRACTOR shall coordinate testing with the ENGINEER. Copies of all test reports shall be submitted to the ENGINEER. All retesting required due to the failure of the CONTRACTOR'S Work to meet the requirements of the Contract Documents shall be at the CONTRACTOR'S expense. All standby and travel time by the testing lab or the ENGINEER due to the CONTRACTOR'S inability to be prepared for testing at the agreed upon time, or inability of the CONTRACTOR to meet performance requirements, shall be at the CONTRACTOR'S expense.

PART 2 - PRODUCTS (NOT USED)

PART 3 - EXECUTION (NOT USED)

++ END OF SECTION ++

SECTION 01412

STORMWATER POLLUTION PREVENTION PLAN AND PERMIT

PART 1 - GENERAL

1.1 SUMMARY

A. Comply with the terms and conditions of Arizona Pollutant Discharge Elimination System (AZPDES) administered by the Arizona Department of Environmental Quality (ADEQ). Under provisions of that permit, CONTRACTOR is designated as permittee and responsible for providing necessary material and for taking appropriate measures to minimize pollutants in stormwater runoff from the Project. Obtain a DeMinimus Discharge Permit from ADEQ for any discharge that is to Waters of the U.S., and comply with the requirements of the permit.

B. The Contract Price shall include all material, labor, and other permits and incidental costs related to:
   1. Preparing, updating, and revising the Stormwater Construction Pollution Prevention Plan (SWPPP).
   2. Installing and maintaining all structural and nonstructural items chosen by CONTRACTOR to comply with the construction SWPPP.
   3. Cleanup and disposal costs associated with cleanup and repair following storm events or CONTRACTOR-caused spills on the Project.
   4. Implementing and maintaining Best Management Practices to comply with the OWNER'S stormwater code.
   5. Preparing the Notice of Intent and Notice of Termination shall be covered by the AZPDES General Permit for Arizona.
   6. Obtain and comply with DeMinimus Permit, if such permit is required.

C. Coordinate the requirements under this Section with Section 02315, Earthwork, Excavation, and Backfill, permit requirements. All necessary SWPPP controls and practices must be implemented prior to commencement of any construction activity.

1.2 RELATED SECTIONS

A. Section 02315, Earthwork, Excavation, and Backfill.

1.3 SUBMITTALS

A. Submit, at least two days prior to the initial start of construction on the Project, completed and signed Notice of Intent forms to the State of Arizona at the following addresses:

1. Stormwater Program-Water Permits Section/NOI
   Arizona Department of Environmental Quality
   1110 West Washington, 5415B-3
   Phoenix, AZ 85007

B. Submit to the OWNER, no later than 30 days, before submitting to the State agency the following:
   1. Notice of Intent (NOI) to be covered by the AZPDES General Permit for Arizona, including certifications of signature.
   2. SWPPP for the Project, including certification of signature. Stormwater Plan shall include CONTRACTOR'S proposed temporary means for stormwater control during all phases of construction and include stormwater pumping/retention plans. This submittal shall be coordinated with CONTRACTOR'S Excavation Plan Submittal, specified in Section 02315, Earthwork, Excavation, and Backfill.
   3. A manual has been prepared by the Maricopa County Flood Control District to aid in CONTRACTOR'S preparation of the SWPPP. This manual, "Drainage Design Manual for Maricopa County Arizona, Volume III, Erosion Control" is available at the Flood Control District Office, 2801 West Durango Street, Phoenix, Arizona. The complete Construction General Permit is in the December 8, 1999, Federal Register available at local libraries and is also available from the ADEQ website at http://azdeq.gov/AZPDES/CGP.

C. Submit to the OWNER, as part of the Construction SWPPP, a construction site inspection report that includes the following:
   1. Inspection scope.
   2. Inspector qualifications.
   3. Observations of SWPPP non-compliance and corrective steps taken.
   4. Certificate of Compliance with SWPPP and the AZPDES General Permit for Stormwater Discharge in the event of no incidents. Reports shall be submitted each quarter, at a minimum, throughout the Contract duration.

D. Submit to the OWNER, upon Project completion, the Notice of Termination (NOT) of coverage under AZPDES General Permit.

E. Shop Drawings: Submit for approval the following:
   1. A copy of this specification section, with addendum updates included, and all referenced and applicable sections, with addendum updates included, with each paragraph check-marked to indicate specification compliance or marked to indicate requested deviations from specification requirements. Check marks (✓) shall denote full compliance with a paragraph as a whole. If deviations from the specifications are indicated, and therefore requested by the CONTRACTOR, each deviation shall be underlined and denoted by a number in the margin to the right of the identified paragraph, referenced to a detailed written explanation of the reasons for requesting the deviation. The ENGINEER shall be the final

authority for determining acceptability of requested deviations. The CONTRACTOR shall furnish equipment and/or services as specified if an exception and/or deviation is rejected. The remaining portions of the paragraph not underlined will signify compliance on the part of the CONTRACTOR with the specifications. Failure to include a copy of the marked-up specification sections, along with justification(s) for any requested deviations to the specification requirements, with the submittal shall be sufficient cause for rejection of the entire submittal with no further consideration.

2. The CONTRACTOR shall submit the preventive maintenance information package as part of the shop drawing submittal package to the ENGINEER for review and approval. **SHOP DRAWING SUBMITTAL PACKAGE WILL NOT BE APPROVED WITHOUT ACCEPTANCE OF PREVENTIVE MAINTENANCE INFORMATION.**

PART 2 - PRODUCTS (NOT USED)

PART 3 - EXECUTION (NOT USED)

++ END OF SECTION ++

SECTION 01414

EARTHMOVING AND DUST CONTROL

PART 1 - GENERAL

1.1 SUMMARY

A. CONTRACTOR shall obtain all Earthmoving Permits and any other permits required for earthmoving and dust generating operations related to the Work, as required by the Maricopa County Air Pollution Control Regulations.

B. CONTRACTOR shall not cause or allow any dust generating operation, earthmoving operation, use of property, or any other operation which causes fugitive dust emissions that exceed the 20% visible emission opacity limit in Rule 300 of Maricopa County's Air Pollution Control Regulations.

C. If requested by the OWNER, ENGINEER, or Maricopa County representative, CONTRACTOR shall conduct opacity observations for visible emissions of fugitive dust in accordance with techniques specified in USEPA Reference Method 9.

D. In addition to Earthmoving Permits, CONTRACTOR shall obtain an approved Dust Control Plan from Maricopa County. At a minimum, the Dust Control Plan shall include the following information:
   1. Name(s), address(es), and phone number(s) of the person(s) responsible for the preparation, submittal, and implementation of the Dust Control Plan and responsible for the dust generating operations.
   2. A site plan that describes the total area of land surface to be disturbed (in acres); the operations and activities to be performed on the site; actual and potential sources of fugitive dust emissions; and the delivery, transportation, and storage areas for the site (including types of materials stored and appropriate size of material stock piles).
   3. Description of the Reasonably Available Control Measures (RACM) to be applied during all periods of dust generating operations at all actual and potential sources of fugitive dust.
   4. Description of dust suppressants to be applied, including product specifications; method, frequency, and intensity of application; type, number, and capacity of application equipment; and certifications related to the suppressant's appropriate and safe use.
   5. Description of specific surface treatment(s) or RACM used to control material track-out where unpaved or access points join paved surfaces.
   6. Description of at least one alternative RACM for each actual and potential fugitive dust source shall be designated as a contingency measure.

E. CONTRACTOR shall post a copy of all Earthmoving Permits as well as the approved Dust Control Plan, in a conspicuous location at the Work site and provide a copy of each to the ENGINEER.

F. CONTRACTOR shall maintain a daily written log that records the actual application or implementation of the RACMS described in the approved Dust Control Plan. CONTRACTOR shall maintain this written log and supporting documentation on-site and shall make available for review on request by ENGINEER, OWNER, or Maricopa County representative. CONTRACTOR shall retain copies of the Dust Control Plan, RACM implementation records, and all supporting documentations for a minimum of three years.

G. CONTRACTOR, at a minimum, shall provide all necessary equipment and materials to apply sufficient dust suppressants (e.g., water, etc.), properly clean (sweep, etc.) all track-out areas, and provide adequate physical stabilizations (e.g., gravel, recycled asphalt, etc.) to meet all requirements of the Earthmoving Permit and approved Dust Control Plan. CONTRACTOR shall use these methods to control fugitive dust generation from all CONTRACTOR operations on all CONTRACTOR areas including, but not limited to:
   1. Construction areas.
   2. Vehicle and equipment parking areas.
   3. Material storage areas.
   4. Office and trailer areas.
   5. Haul and access roadways.
   6. Track-out areas.
   7. All other areas where CONTRACTOR shall be working, storing, or parking vehicles, equipment, and materials.

H. CONTRACTOR shall pay all fines issued to the OWNER by the USEPA, ADEQ, or Maricopa County due to violation of CONTRACTOR'S Earthmoving Permit and Dust Control Plan.

PART 2 - PRODUCTS (NOT USED)

PART 3 - EXECUTION (NOT USED)

++ END OF SECTION ++

SECTION 01451

TESTING LABORATORY SERVICES FURNISHED BY OWNER

PART 1 - GENERAL

1.1 SUMMARY

A. The OWNER will employ and pay for an independent testing laboratory to perform Quality Assurance only.

B. Inspection, sampling, and testing for Quality Assurance shall be as specified in the individual Sections. These include, but are not limited to:
   1. Section 02315, Earthwork, Excavation, and Backfill.
   2. Section 02318, Crushed Stone, Gravel and Decomposed Granite.
   3. Section 02500, Asphalt Pavement.
   4. Section 03300, Cast-In-Place Concrete.
   5. Section 03600, Grout.
   6. Section 04820, Reinforced Unit Masonry Assemblies.
   7. Section 05120, Structural Steel and Framing.
   8. Section 15050, Piping Systems.

C. The OWNER will pay for the testing listed above for Quality Assurance only, except for repeat testing which results from CONTRACTOR'S negligence or his repeated failure to meet Contract Document requirements.

D. CONTRACTOR shall pay for:
   1. All Quality Control testing called for in the specifications.
   2. Tests made for CONTRACTOR'S convenience.
   3. Repeat tests required because of CONTRACTOR'S negligence or repeated failure, three or more tests for the same item, to meet Contract Document requirements.

E. The testing laboratory is not authorized to approve or accept any portion of the Work; rescind, alter, or augment the requirements of the Contract Documents; or perform any duties of CONTRACTOR.

1.2 QUALIFICATIONS OF LABORATORY

A. Where applicable, the testing laboratory will meet "Recommended Requirements for Independent Laboratory Qualification", latest edition, published by American Council of Independent Laboratories, and the basic requirements of ASTM E329 "Standards of Recommended Practice for Inspection and Testing Agencies for Concrete and Steel as Used in Construction".

B. Testing equipment used by the laboratory will be calibrated at maximum 12 month intervals by devices of accuracy traceable to either National Bureau of Standards or accepted values of natural physical constants.

1.3 LABORATORY DUTIES

A. The Testing Laboratory shall:
   1. Cooperate with CONTRACTOR and provide qualified personnel promptly on notice.
   2. Perform specified inspections, sampling, and testing of materials and methods of construction; comply with applicable standards; and ascertain compliance with requirements of Contract Documents.
   3. Promptly notify ENGINEER and CONTRACTOR of irregularities or deficiencies of Work that are observed during performance of services.
   4. Promptly submit five copies of reports of inspections and tests to ENGINEER, including:
      a. Date issued.
      b. Project title and number.
      c. Testing laboratory name and address.
      d. Date of inspection or sampling.
      e. Record of temperature and weather.
      f. Date of test.
      g. Identification of product and Specification Section.
      h. Location in Project.
      i. Type of inspection or test.
      j. Results of tests and observations regarding compliance with Contract Documents.
   5. Perform additional tests and services as required by OWNER.

1.4 CONTRACTOR'S RESPONSIBILITIES

A. CONTRACTOR shall:
   1. Cooperate with laboratory personnel and provide access to Work and to manufacturer's operations.
   2. Provide to laboratory preliminary representative samples of materials to be tested, in required quantities.
   3. Furnish copies of product test reports.
   4. Provide to the laboratory the preliminary design mix proposed for concrete and other material mixes that require testing by the testing laboratory.
   5. Furnish labor and facilities:
      a. To provide access to Work to be tested.
      b. To obtain and handle samples at the site.
      c. To facilitate inspections and tests.
      d. For laboratory's exclusive use for storage and curing of test samples.
      e. Forms for preparing concrete test beams and cylinders.

6. Notify laboratory and ENGINEER sufficiently in advance of operations to allow for assignment of personnel and scheduling of tests.
7. Arrange with laboratory and pay for additional samples and tests required for CONTRACTOR'S convenience.

PART 2 - PRODUCTS (NOT USED)

PART 3 - EXECUTION (NOT USED)

++ END OF SECTION ++

SECTION 01500

CONSTRUCTION FACILITIES AND TEMPORARY CONTROLS

PART 1 - GENERAL

1.1 SUMMARY

A. Furnish and install construction facilities and temporary controls as specified herein including all appurtenances required or a complete and operational facility.

1.2 SECTION INCLUDES

A. Temporary utilities required during construction.

B. Temporary construction facilities, including field offices.

C. Requirements for security and protection of facilities and property.

D. Requirements for access to the Work.

E. Temporary controls for protection of environment.

F. Project sign.

1.3 SUBMITTALS

A. Temporary Utility Submittals:
   1. Electric power supply and distribution plans.
   2. Temporary water supply and distribution plans.
   3. Copies of approvals of local utility companies for CONTRACTOR'S intended temporary utility plans.

B. Temporary Construction Submittals:
   1. Access roads and parking area plans.
   2. Storage building plans, including gravel surfaced area.
   3. Fencing and protective barrier locations and details.
   4. ENGINEER'S and plant staff field office plans and equipment list.
   5. Staging area plan and notification of any obstructions encountered during mobilization.

C. Shop Drawings: Submit for approval the following:
   1. A copy of this specification section, with addendum updates included, and all referenced and applicable sections, with addendum updates included, with each paragraph check-marked to indicate specification compliance or marked to indicate requested deviations from specification requirements. Check marks (✓)

shall denote full compliance with a paragraph as a whole. If deviations from the specifications are indicated, and therefore requested by the CONTRACTOR, each deviation shall be underlined and denoted by a number in the margin to the right of the identified paragraph, referenced to a detailed written explanation of the reasons for requesting the deviation. The ENGINEER shall be the final authority for determining acceptability of requested deviations. The CONTRACTOR shall furnish equipment and/or services as specified if an exception and/or deviation is rejected. The remaining portions of the paragraph not underlined will signify compliance on the part of the CONTRACTOR with the specifications. Failure to include a copy of the marked-up specification sections, along with justification(s) for any requested deviations to the specification requirements, with the submittal shall be sufficient cause for rejection of the entire submittal with no further consideration.

2. The CONTRACTOR shall submit the preventive maintenance information package as part of the shop drawing submittal package to the ENGINEER for review and approval. **SHOP DRAWING SUBMITTAL PACKAGE WILL NOT BE APPROVED WITHOUT ACCEPTANCE OF PREVENTIVE MAINTENANCE INFORMATION.**

1.4 STAGING AREA

A. Use the area designated for CONTRACTOR'S temporary facilities as shown on Drawings. CONTRACTOR shall use a separate entrance to enter the staging area and the trailer area. All construction vehicles shall stay off the main entrance.

B. Notify ENGINEER of obstructions not shown or not readily apparent by visual inspection of the staging area. Do not remove obstructions without OWNER'S prior consent.

1.5 TEMPORARY UTILITIES

A. Costs after Substantial Completion:
   1. Upon acceptance of the Work or a portion of the Work defined and certified as substantially complete by ENGINEER, and OWNER commences full-time successful operation of the facility or portion thereof, the OWNER will bear the cost for utilities used for OWNER'S operation. CONTRACTOR shall continue to pay for temporary utilities used until Final Acceptance of the Work, except as provided herein.

B. Electric Power:
   1. The CONTRACTOR shall make arrangements with the OWNER for obtaining temporary electric power service during the Contract period.
   2. Temporary electric power installations shall meet construction safety requirements of OSHA, State, and other governing agencies.

C. Water:

1. The OWNER will furnish, without charge, reasonable quantities of construction water required by the CONTRACTOR in performance of the Work under the Contract. However, the CONTRACTOR shall provide all facilities necessary to convey the water from the OWNER-designated source to the points of use in accordance with the requirements of the Contract Documents.
2. The CONTRACTOR shall not make connection to or draw water from any water system without first obtaining permission from the OWNER or the authority having jurisdiction over the use of the said water system. For each water system connection, the CONTRACTOR shall first attach to the water system a valve and a meter. The size and type of valve and meter shall be acceptable to OWNER or jurisdictional authority.
3. Before Final Acceptance of the Work, all temporary connections to the said water system shall be entirely removed. All affected improvements shall be restored to their original condition or better, to the satisfaction of the ENGINEER and to the OWNER or jurisdictional authority.
4. All potable water used by CONTRACTOR'S employees, subcontractor's employees and the temporary construction facilities during construction shall be furnished by the CONTRACTOR and shall be bottled water or water furnished in approved metal dispensers. Notices shall be posted conspicuously throughout the site warning temporary piped water may be contaminated.

D. Temporary Fire Protection:
1. The CONTRACTOR shall provide all facilities and equipment necessary to provide temporary fire protection for the Chandler Airport WRF and Ocotillo WRF Project sites in accordance with the requirements of the 2018 International Fire Code.

E. Sanitation:
1. Provide and maintain sanitary facilities for CONTRACTOR'S employees and subcontractors' employees that comply with regulations of local and State health departments.
2. Provide chemical toilets of suitable types and maintain them in a sanitary condition at all times conforming to code requirements and acceptable to health authorities. They shall be of watertight construction so that no contamination of the area can result from their use. The CONTRACTOR shall make arrangements for frequent emptying of toilets. Upon completion of Work, CONTRACTOR shall remove toilets and restore area to original condition.
3. Use of OWNER'S existing sanitary facilities by construction personnel will not be allowed unless OWNER approval is provided.

F. Communications:
1. The CONTRACTOR shall provide and maintain at all times during the progress of the Work, not less than one telephone in good working order at the CONTRACTOR'S construction field office.

1.6 PROJECT SIGN

A. Submit a layout drawing for approval showing the location, size, and color of logos and lettering.

B. The sign shall be maintained in good condition until completion of the Contract, at which time the sign shall become the property of the OWNER.

C. The CONTRACTOR and his subcontractors may erect signs for information and direction. No commercial or advertising signs will be allowed on the site of the Work.

PART 2 - PRODUCTS (NOT USED)

PART 3 - EXECUTION

3.1 SECURITY

A. The CONTRACTOR shall provide security such as fencing and locked gates to prevent unauthorized persons from entering the construction site and a secured storage area for materials and equipment.

B. The CONTRACTOR shall safely guard all work, materials, equipment, and property from loss, theft, damage, and vandalism.

C. The CONTRACTOR shall make no claim against the OWNER for damage resulting from trespass.

D. If existing fencing or barriers are breached or removed for purposes of construction, the CONTRACTOR shall provide and maintain temporary security fencing equal to the existing in a manner satisfactory to the ENGINEER and OWNER.

E. Security measures taken by the CONTRACTOR shall be at least equal to those usually provided by the OWNER to protect his existing facilities during normal operation.

F. Maintain security program throughout construction until Final Acceptance and occupancy precludes need for the CONTRACTOR'S security program.

G. All costs for security as specified in this Section shall be borne by the CONTRACTOR.

H. CONTRACTOR hereby acknowledges and agrees to limit access to the site to those persons cleared by OWNER. CONTRACTOR expressly acknowledges OWNER'S

right to deny or limit entry to the site to any person(s) that OWNER deems to be a security risk.

3.2 TEMPORARY CONSTRUCTION FACILITIES

A. Access Roads and Parking:
   1. Construct temporary construction access roads and detours as necessary to execute the Work and as approved by the ENGINEER. Maintain in good condition until no longer needed, then remove the temporary roads and leave the area in a condition satisfactory to the ENGINEER. Construction traffic shall use the construction access road to enter and exit the staging and trailer areas. Construction traffic shall not use the plant's main entrance.

B. Storage Yards and Buildings:
   1. Construct temporary storage yards for the storage of products that are not subject to damage by weather conditions. Materials such as pipe, reinforcing, and structural steel shall be stored on pallets or racks, off the ground, and in a manner to allow ready access for inspection and inventory. Temporary gravel surfacing of storage yards must be approved by the ENGINEER.
   2. Erect or provide temporary storage buildings of various sizes needed to protect mechanical and electrical equipment and other materials, as recommended by manufacturers of such equipment and materials.
      a. Provide environmental control systems that meet recommendations of manufacturers of equipment and materials stored in the buildings.
      b. Buildings shall be of sufficient size.
      c. Arrange or partition buildings to provide security for their contents and ready access for inspection and inventory.
      d. At or near completion of the Work, temporary storage buildings shall be dismantled, removed from the site, and remain the property of the CONTRACTOR.
   3. Store combustible materials (paints, solvents, fuels, etc.) in a well ventilated building remote from other buildings.

C. Fencing and Barricades:
   1. Barricades: Provide barricades as necessary to prevent unauthorized entry to construction areas, both inside and outside of fenced area. Also provide barricades to protect existing facilities and adjacent properties from potential damage. Locate barriers to enable access by facility operators and property owners. Provide temporary fencing while working in and around the perimeter area without the existing WRF fence (ex., between removal and replacement of existing fence, during grading operations adjacent to the perimeter area without fence, etc.).

D. Offices:

1. CONTRACTOR shall provide, maintain, and subsequently remove as its property, one field office for each site. The field office at RWIF shall meet the requirements of Section 3.2.D.2. Field offices shall be for the exclusive use of ENGINEER, OWNER, and its representatives. Field office shall be new or like new in appearance and function.
2. ENGINEER'S field office, equipped as specified below, shall be available for ENGINEER within two weeks after commencement of Contract Time and shall remain on the site for 30 days after Final Acceptance of all Work.
    a. All metal frame.
    b. All metal exterior, sides, and roof.
    c. Security guard screens on all windows.
    d. Toilet and wash basin with hot and cold water and drains.
    e. Insulated double walls, floor, and roof.
    f. Self-contained, built-in electric heater capable of maintaining 70º F in winter and self-contained air conditioning unit capable of maintaining 75º F in summer.
    g. Fluorescent ceiling lights in all rooms.
    h. 110 volt electric wall plugs in all rooms, with maximum spacing between receptacles not to exceed 8 feet.
    i. Minimum Interior Height: 8 feet.
    j. Minimum Exterior Width: 24 feet.
    k. Minimum Exterior Length: 70 feet.
    l. Railed stairway to entrances.
    m. Sign on entrance door.
    n. Trailer shall contain a minimum of five offices, meeting room, reception area, lavatories, and work areas. Interior layout is to be as directed by ENGINEER.
    o. Doors with Cylinder Locks: Entrance door, exit door.
    p. Number of Windows with window covering: 2 per office.
    q. Window coverings: polyester curtains or as directed by ENGINEER.
    r. Bottled Water Service: 1 with cooler.
    s. Paper Towel Dispenser with Towels: 1 each.
    t. Paper Cup Dispenser with Cups: 1 each.
    u. Desks: 3, 30-inches by 60-inches.
    v. Swivel Chairs: 4 each.
    w. Folding Chairs: 12 each.
    x. Four-Drawer Steel File with Lock: 2 each, legal width.
    y. Drawing Rack with Drawing Hangers: 1 each.
    z. Bookcase: 8 each.
    aa. Wastepaper Basket: 5 each.
    bb. Clothes Rack: 1 each.
    cc. First-Aid Kit: 1 each.
    dd. Telephone/answering machines with 8 foot handset cord: 4-button with three incoming/outgoing lines (a fourth and fifth line shall be provided for

the facsimile machine and computer); all telephones Touch-Tone with external conference speaker. Phones shall be provided as noted in Paragraph jj below.

ee. One new color combination wireless copy machine/printer/scanner. Unit shall be able to connect to network and have document feeder, with reduction, enlargement, auto-document feed, auto stapler function, high capacity feeder, bypass tray, four paper trays, top tray, stacker tray and sorting capability. Provide service, warranty (including toner and replacement cartridges) and maintenance for the duration of the Contract. Provide 8-1/2-inch by 11-inch, 8-1/2 inch by 14-inch, and 11-inch by 17-inch copy paper for the duration of the Contract. Copier shall make up to 11-inch by 17-inch copies. Copier shall copy at a rate no slower than 40 copies per minute.

ff. Carbon Dioxide (10-Pound) Fire Extinguisher: 2 each.

gg. Tables: 1, 48-inch diameter; 3, 3 foot by 6 foot.

hh. Locking storage cabinet: 1 each.

ii. Private telephone service and installation charges for five telephone lines. In addition, pay all local and long distance charges up to an average of $400 per month over the duration of the CONTRACT. Telephone service shall include one telephone in each office (except for inspector's office which will have two telephones), two in reception area, and one in conference room. The fourth and fifth telephone lines shall be dedicated to the facsimile machine and the computer system. A speaker phone shall be supplied for the conference room. The telephone system shall be similar to the Merlin System and be equipped with speed dialing capability.

jj. Facsimile machine and separate telephone service. Machine shall be equivalent to and compatible with Cannon Laser Class 720i. Utilize the dedicated incoming telephone line for the facsimile installation and pay all charges associated with the unit (including maintenance and warranty work) during the construction period. Payment for the facsimile telephone charges shall be in accordance with Paragraph 3.2.D.2.dd, of this Section.

kk. Provide continuous Internet and DSL service with all associated equipment a maximum of two weeks after trailer is installed. Configure Internet and DSL so service is available by all workstations. Provide one internet connection along with cabling and required hardware for each desk. Internet download speed shall be 100Mbps minimum.

ll. Potable water hose bib with 20 feet of hose connected to potable water supply, near main entrance to ENGINEER'S trailer. Hose bib shall be freeze protected.

mm. 4.9 cubic foot refrigerator with freezer compartment.

nn. Waste refuse disposal service.

3. All items shall be furnished and maintained by the CONTRACTOR from the notice to proceed to the date of final acceptance. The cost of these items shall be

considered incidental to the cost of the Project. No separate measurement of payment shall be made for these items.

4. The field office shall be located where directed by the ENGINEER; leveled, blocked, tied down, and skirted as directed; and relocated when necessary and approved.
5. The CONTRACTOR shall provide and maintain connections to the City's potable water including backflow prevention as required, connections to the City's sanitary sewer, and electrical service to the field offices, including an adequate disconnect switch and an automatic circuit breaker panel located on the inside of the office.
6. CONTRACTOR shall maintain field offices in good repair and acceptable appearance. Provide daily cleaning service and maintenance and replenishment, as applicable, of paper towels, paper cups, soap, toilet paper, bottled water service, duplicator paper, and toner.
7. Provide gravel or crushed rock under and around the field offices to a minimum distance of 40 feet. Provide sanitary facilities in compliance with State and local health authorities.

3.3 EXAMINATION OF EXISTING FACILITIES

A. General:

1. After the Contract is awarded and before the commencement of Work, CONTRACTOR and ENGINEER shall make a thorough examination of all existing buildings, structures, and other improvements in the vicinity of the Work, as applicable, which might be damaged by construction operations.
2. Periodic examinations of existing buildings, structures, and other improvements in the vicinity of the Work shall be made jointly by authorized representatives of the CONTRACTOR, ENGINEER, and the OWNER. The scope of the examination shall include cracks in structures, settlement, leakage, and similar conditions.
3. Records in triplicate of all observations shall be prepared by the CONTRACTOR and each copy of every document shall be signed by the authorized representative of the OWNER and of the CONTRACTOR. Photographs, as requested by the OWNER, shall be made by the CONTRACTOR and signed in the manner specified above. One signed copy of every document and photograph will be kept on file in the office of the ENGINEER.
4. These records and photographs are intended for use as indisputable evidence in ascertaining whether and to what extent damage occurred as a result of the CONTRACTOR'S operations, and are for the protection of the adjacent property owners, the CONTRACTOR, and the OWNER.

3.4 SAFETY REQUIREMENTS

A. General:

1. CONTRACTOR shall do whatever work is necessary for safety and be solely and completely responsible for conditions of the job site, including safety of all persons (including employees) and property during the Contract period. This requirement shall apply continuously and not be limited to normal working hours.
2. Safety provisions shall conform to Federal and State Departments of Labor Occupational Safety and Health Act (OSHA), and other applicable Federal, State, County, and local laws, ordinances, codes, requirements set forth herein, and regulations that may be specified in other parts of these Contract Documents. Where these are in conflict, the more stringent requirement shall be followed. CONTRACTOR shall become thoroughly familiar with governing safety provisions and shall comply with the obligations set forth therein.
3. CONTRACTOR shall develop and maintain for the duration of the CONTRACT a safety program that will effectively incorporate and implement required safety provisions. CONTRACTOR shall appoint a qualified employee who is authorized to supervise and enforce compliance with the safety program.
4. ENGINEER'S duty to conduct construction review of the CONTRACTOR'S performance is not intended to include a review or approval of the adequacy of CONTRACTOR'S safety supervisor, safety program, or safety measures taken in, on, or near the construction site.
5. As part of safety program, CONTRACTOR shall maintain at its office or other well known place at the job site, safety equipment applicable to the Work as prescribed by the governing safety authorities, and articles necessary for giving first-aid to the injured. Establish procedures for the immediate removal to a hospital or a doctor's care of persons who may be injured on the job site.
6. CONTRACTOR shall do all work necessary to protect the general public from hazards, including, but not limited to, surface irregularities or unramped grade changes in pedestrian sidewalk or walkway, and trenches or excavations in roadway. Barricades, lanterns, and proper signs shall be furnished in sufficient amount to safeguard the public and the Work.
7. Construct and maintain satisfactory and substantial temporary chain-link fencing, solid fencing, railing, barricades, steel plates, as applicable, at all openings, obstructions, or other hazards in streets, sidewalks, floors, roofs, and walkways. Such barriers shall have adequate warning lights as necessary or required for safety.
8. Comply with OWNER'S safety rules while on OWNER'S property.
9. If death or serious injuries or damages are caused, the accident shall be reported immediately by telephone or messenger to the ENGINEER and OWNER. In addition, CONTRACTOR shall promptly report in writing all accidents whatsoever arising out of, or in connection with, the performance of the Work whether on or adjacent to the site, giving full details and statements of witnesses.
10. If claim is made by anyone against CONTRACTOR or any subcontractor on account of accident, CONTRACTOR shall promptly report the facts in writing, giving full details of the claim.

B. Traffic Safety and Access:
   1. Comply with rules and regulations of the City, State, and County authorities regarding closing or restricting the use of public streets or highways. No public or private road shall be closed except by written permission of the proper authority. Assure the least possible obstruction to traffic and normal commercial pursuits.
   2. Where traffic will pass over backfilled trenches before they are paved, maintain top of trench to allow normal vehicular traffic to pass over. Provide temporary access driveways where required. Cleanup operations shall follow immediately behind backfilling.
   3. When flagmen and guards are required by regulation or when deemed necessary for safety, furnish them with approved orange-wearing apparel and other regulation traffic control devices.
   4. Traffic control procedures and devices used on all local rights-of-way shall meet the requirements of the applicable current laws and regulations for traffic control.
   5. Notify the fire department, police department and obtain required permits before closing any street or portion thereof. Notify said departments when the streets are again passable for emergency vehicles. Do not block off emergency vehicle access to consecutive arterial crossings or dead-end streets in excess of 300 linear feet without written permission from the fire department. Conduct operations with the least interference to fire equipment access, and at no time prevent such access.
   6. CONTRACTOR shall leave its night emergency telephone number or numbers with the police department, so that contact may be made easily at all times in case of barricade and flare trouble or other emergencies.
   7. Maintain postal service facilities in accordance with the requirements of the U.S. Postal Service. Move mailboxes to temporary locations designated by the Service, and on completion of Work in each area replace them in their original location and in a condition satisfactory to the Service.

C. Fire Prevention:
   1. Perform all Work in a fire safe manner. Furnish and maintain on the site adequate firefighting equipment capable of extinguishing incipient fires. Comply with applicable Federal, local, and State fire prevention regulations. Where these regulations do not apply, follow applicable parts of the National Fire Prevention Standard for Safeguarding Building Construction Operations (NFPA No. 241).

D. Protection of Work and Property:
   1. General:
      a. CONTRACTOR shall employ such means and methods necessary to adequately protect public property and property of the OWNER against damage. In the event of damage to such property, immediately restore the property to a condition equal to its original condition and to the satisfaction

of the ENGINEER and the OWNER of said property, and bear all costs therefore.

b. Protect stored materials and other items located adjacent to the proposed Work.

2. Finished Construction:
   a. General Construction Contractor shall assume the responsibility for protection of finished construction and shall repair and restore any and all damage to finished work to its original or better condition.
   b. Prevent wheeling of loads over finished floors, either with or without plank protection, except in rubber-tired wheelbarrows, buggies, or dollies. Protect finished floors and concrete floors exposed as well as those covered with composition tile or other applied surfacing. All finished floors shall be protected from stains due to spillage of oil, paint, or any other construction-related materials. Any such stains that are allowed to occur shall be removed, if necessary by removing and replacing the floor, at the CONTRACTOR'S expense.
   c. At such time temporary facilities and utilities are no longer required for the Work, notify ENGINEER of intent and schedule for their removal. Remove temporary facilities and utilities from the site as CONTRACTOR'S property and leave the site in such condition as specified, as shown on the Drawings, or as directed by the ENGINEER.
   d. In unfinished areas, leave the site evenly graded, seeded, or planted as necessary, in a condition that will restore original drainage and with an appearance equal to or better than original.

3.5 ENVIRONMENTAL CONTROLS

A. General:
   1. The CONTRACTOR, in executing the Work, shall maintain affected areas within and outside project boundaries free from environmental pollution that would be in violation of Federal, State, or local regulations.
   2. Do not impair operation of existing sewer systems. Prevent construction material, pavement, concrete, earth, volatile and corrosive wastes, and other debris from entering sewers, pump stations, or other sewer structures. Maintain original site drainage wherever possible.

B. Waste Material Disposal:
   1. Excess excavated material not required or suitable for backfill, and other waste material, must be disposed of in licensed landfills. The CONTRACTOR shall submit the proposed haul route(s) for each site intended to be used.
   2. Unacceptable disposal sites include, but are not limited to, sites within a wetland or critical habitat and sites where disposal will have a detrimental effect on surface water or groundwater quality.
   3. In lieu of the foregoing, CONTRACTOR may make his own arrangements for disposal subject to submission of proof that the owner(s) of the proposed site(s)

has a valid fill permit issued by the appropriate governmental agency. Submit intended haul route plan, including a map of the proposed route(s). Provide watertight conveyance for liquids, semi-liquids, or saturated solids that tend to bleed during transport.

4. Maintain areas covered by the Contract and affected public properties free from accumulations of waste, debris, and rubbish caused by construction operations. Remove excavated materials from the site.
5. Cleaning and disposal shall comply with local ordinances and pollution control laws. Do not burn or bury rubbish or waste materials on the project site. Do not dispose of volatile wastes such as mineral spirits, oil, chemicals, or paint thinner in storm or sanitary drains. Disposal of wastes into streams or waterways is prohibited. Provide acceptable containers for collection and disposal of waste materials, debris, and rubbish.

C. Air Pollution Control:
   1. CONTRACTOR shall comply with Maricopa County's requirements regarding dust control.
   2. Minimize air pollution likely to occur from construction operations by wetting down bare soils during windy periods, requiring proper combustion emission control devices on construction vehicles and equipment, and by shutdown of motorized equipment not in use. Trash burning will not be permitted on the construction site.
   3. Operations of dumping rock and of carrying rock away in trucks shall be conducted to cause a minimum of dust. Give unpaved streets, roads, detours, or haul roads used in the construction area a dust-preventive treatment, or periodically water to prevent dust. Strictly adhere to applicable environmental regulations for dust prevention.

D. Noise Control:
   1. Minimize noise by executing work using appropriate construction methods and equipment. Provide acoustical barriers so noise emanating from tools or equipment will not exceed legal noise levels.
   2. Submit plans to mitigate construction noise impacts and to comply with noise control ordinances including method of construction, equipment to be used, and acoustical treatments.
   3. If piles are required, use spudding or drilling techniques to penetrate through fill and overburden. Penetrate intermediate hard layers to minimize noise impact by minimizing the number of piledriver hammer blows. Use only piledriver hammers with mufflers capable of reducing noise, and use barriers or shielding techniques to comply with applicable noise criteria.

E. Pest and Rodent Control:
   1. Comply with local health requirements for pest and rodent control. Cooperate with agencies and companies authorized to spray or provide other treatments to prevent insect outbreaks.

2. Maintain closures of means of entry into finished buildings by rodents. Inspect for rodents during cleaning, remove debris, and treat infested areas to OWNER'S satisfaction.

++ END OF SECTION ++

SECTION 01640

MATERIALS AND EQUIPMENT

PART 1 - GENERAL

1.1 SUMMARY

A. The CONTRACTOR shall furnish all materials and equipment and perform all operations required to completely install and place in operation the various mechanical apparatus and systems indicated on the Drawings and as specified herein. It is not the intention to mention herein each and every item required. However, all installations shall be complete and operable in the methods intended. These general equipment requirements apply, in general, to all equipment. They shall supplement the detailed Equipment Specifications, but in case of conflict, the Equipment Specifications shall govern.

1.2 RELATED SECTIONS

A. Section 01300, Submittals.

PART 2 - PRODUCTS

2.1 GENERAL

A. Materials and equipment shall be of new, of first quality and best grade, essentially the standard catalog products of reputable manufacturers, and shall be of the type, size, and capacity, and for the type of service specified. It is the intent of these Specifications that the highest quality equipment shall be provided for the intended service. Units proposed shall be carefully matched to the particular hydraulic and mechanical requirements for each installation, and the CONTRACTOR shall submit complete hydraulic and mechanical data for approval of the ENGINEER. Where two or more units of the same class of equipment are required, these units shall be the products of a single manufacturer; however, the component parts of the system need not be the products of the same manufacturer unless otherwise specified.

1. Materials and Workmanship. Materials used in the manufacture of the equipment shall be of the best quality used for the purpose in commercial practice. Materials shall be suitable for service conditions. Iron castings shall be tough, close-grained gray iron free from blowholes, flaws, or excessive shrinkage, and shall conform to ASTM A48. Except where otherwise specified, structural and miscellaneous fabricated steel used in items of equipment shall conform to the Standards of the American Institute of Steel Construction. All structural members shall be considered as subject to shock or vibratory loads. Unless otherwise specified, all steel which will

be submerged, all or in part, during normal operation of the equipment shall have a minimum nominal thickness of 1/4-inch. Equipment shall be installed in accordance with the recommendations of the manufacturer and the best standard practice for each type of equipment.

2. Approval of Materials, Equipment, and Shop Drawings. Detailed Shop Drawings shall be prepared for the equipment to be furnished under this Project. General Drawings for equipment will not be acceptable. Approval of equipment under this provision shall not be construed as authorizing any deviations from the Specification unless the attention of the ENGINEER has been directed to the specific deviation.
    a. The decision of the ENGINEER on any questions concerning the acceptability of materials, equipment, or installation shall be final and binding. The Shop Drawing material required for the various submittals shall be in accordance with the coded legend set forth in Section 01300, Submittals, and as indicated and specified under various headings of these specifications.
3. Nameplates: Equipment shall be furnished with nameplates of bronze, monel, or stainless steel. Aluminum will not be acceptable. Each nameplate shall include pertinent hydraulic and mechanical data. Information shown shall be permanently stamped or cast into each nameplate and shall include the manufacturer's name and model number.
4. ASME Stamp: Where materials and equipment are specified to be constructed in accordance with the standard of the American Society of Mechanical Engineers Code for Unfired Pressure Vessels, the CONTRACTOR shall submit proof that the items furnished under this Section of the Specifications conform to such requirements. The ASME stamp, label, or listing will be acceptable as sufficient evidence that the items conform to these requirements and shall be provided on all pressure vessels falling within the ASME Code jurisdiction.

B. Electric Motors:
1. General: Unless otherwise required by the detailed equipment specifications, motors furnished with equipment shall be rated for continuous duty at 50° C ambient temperature with a 1.15 service factor. Motors designated for use with variable speed drives and where indicated shall be derated to accommodate the application. Where frequent starting occurs, motors shall be designed for frequent starting duty equivalent to the duty service required by the driven equipment. The horsepower rating of each motor shall be as required to drive the equipment under full load, including all losses in speed reducers and power transmission, and to be non-overloading over the entire range of equipment head capacity curves without the use of motor service factors. It is the intent of this general specification to allow the manufacturer's standard motor on integrally constructed motor driven equipment such as appliances, hand tools, etc., that is specified by model number in which a redesign of the complete unit would be required for a motor with other features as may be specified herein. All motors furnished

under these Specifications shall be of recognized manufacture, of adequate capacity for the loads involved, and wound to the current characteristics noted. All motors shall conform to the standards of manufacture and performance of the National Electrical Manufacturers Association as shown in their latest publications.

2. Enclosures: Unless otherwise required by the detailed equipment specifications, the enclosures for motors shall be as indicated below:
   a. Motors installed outdoors shall be totally enclosed or totally enclosed fan-cooled except that vertically mounted motors may be weather protected Type I.
   b. Motors installed indoors may be open drip-proof unless otherwise indicated.
3. Motor horsepower requirements in the equipment specifications are estimated. If the horsepower requirements for the equipment furnished vary from the estimated horsepower, the CONTRACTOR shall be responsible for making all necessary revisions to wiring, conduit, motor starters, circuit breaker, and other electrical equipment at no additional cost to OWNER.
4. Anchor Bolts: Equipment suppliers shall furnish suitable anchor bolts of specified metallurgy for each item of equipment. Anchor bolts, together with templates or setting drawings, shall be delivered sufficiently early to permit setting the anchor bolts when the structural concrete is placed. Two nuts shall be furnished for each bolt. Unless otherwise shown or specified, anchor bolts for items of equipment mounted on baseplates shall be long enough to permit 1-1/2-inch of grout beneath the base plant and to provide adequate anchorage into structural concrete.
5. Equipment Bases: A cast iron or welded steel baseplate shall be provided for each pump and other item of equipment which is to be installed on a concrete base. Each baseplate shall support the unit and its drive assembly, and shall be of a neat design with pads for anchoring the units. Baseplates shall be anchored to the concrete base with suitable anchor bolts and grouted in place.
6. Equipment Guards: All belts or chain drives, fan blades, couplings, and other moving or rotating parts shall be covered on all sides by a safety guard. All safety guards in outdoor locations shall be designed to prevent the entrance of rain and dripping water.
7. Special Tools and Accessories: Equipment requiring periodic repair and adjustment shall be furnished complete with all special tools, instruments, and accessories required for proper maintenance. Equipment requiring special devices for lifting or handling shall be furnished complete with those devices.
8. Standard specifications prepared by recognized organizations mentioned elsewhere shall govern except as provided otherwise by these specifications and/or its accompanying drawings. Special care shall be exercised in requests for quotations and in orders, to refer to the standard specifications and to all modifications thereof.
9. Standard Codes, Regulations, and Specifications: Unless indicated or specified otherwise, all materials and workmanship for the mechanical trades

shall conform to the editions of the various standards, codes, manuals, and specifications in effect on the date of advertisement for bids, which are referred to in the various sections herein.

PART 3 - EXECUTION

3.1 PROTECTION OF EQUIPMENT

A. General. All equipment shall be boxed, crated, or otherwise completely enclosed and protected during shipment, handling, and storage. All equipment shall be protected from exposure to the elements and shall be kept thoroughly dry at all times.

B. Painted surfaces shall be protected against impact, abrasion, discoloration, and other damage. All painted surfaces which are damaged prior to acceptance of equipment shall be repainted to the satisfaction of the ENGINEER.

C. Electrical equipment, controls, and insulation shall be protected against dust, moisture, or water damage.

3.2 INSTALLATION

A. Installation of materials and equipment specified herein shall be performed in a workmanlike manner by mechanics skilled in their particular trade. Piping and equipment shall be installed square and plumb and accessible for proper operation and service. Installations shall be consistent in completeness and appearance whether enclosed or exposed. Any item which does not present a neat and workmanlike appearance shall be replaced without additional cost to OWNER.

3.3 ELECTRIC WIRING

A. The CONTRACTOR shall do all electric wiring of every type for both power supply and for instrumentation and control in accordance with the provisions specified herein, except for such items as are normally wired at their point of manufacture and so delivered, and unless specifically noted to the contrary herein. The CONTRACTOR shall erect all motors and shall mount all starters and controls, furnishing the supporting structures.

3.4 GUARANTEE

A. The CONTRACTOR shall guarantee all equipment against:
   1. Faulty or inadequate design.
   2. Improper assembly or erection.
   3. Defective workmanship or materials.
   4. Leakage, breakage, or other failure.
   5. The guarantee period shall be as defined in the General Conditions.

++ END OF SECTION ++

SECTION 01650

STARTING OF SYSTEMS

PART 1 - GENERAL

1.1 SUMMARY

A. Description:
   1. This Section contains requirements for CONTRACTOR'S performance in documenting testing work required under this Contract. In addition, this Section contains requirements for CONTRACTOR'S starting of systems, performance testing during startup, performance testing of all mechanical, electrical, instrumentation, HVAC equipment and systems, and training. This Section supplements, but does not supersede specific testing requirements, found elsewhere in the Contract Documents.

1.2 RELATED SECTIONS

A. Section 01300, Submittals.

1.3 SUBMITTALS

A. Descriptive submittals shall be made in accordance with Section 01300, Submittals. Submit for approval the following:
   1. A complete description of CONTRACTOR'S plan for documenting the results from the test program in conformance with the requirements of Paragraph 2.1.A., below, including:
      a. Proposed plan for documenting the calibration of all test instruments.
      b. Proposed plan for calibration of all instrument systems, including flow/level meters and all temperature, pressure, weight, and analysis systems.
      c. Sample forms for documenting the results of field pressure and performance tests.
   2. The credentials and certification of the testing laboratory proposed by CONTRACTOR for calibration of all test equipment.
   3. Pre-start-up check-out procedures reviewed and approved by the respective equipment manufacturers.
   4. Detailed testing plans, setting forth step-by-step descriptions of the procedures proposed by CONTRACTOR for the systematic startup and performance testing of all equipment and systems installed under this Contract.
   5. A schedule and subsequent updates, presenting CONTRACTOR'S plan for startup and performance testing the equipment and systems installed under this Contract.

6. A schedule establishing the expected time period (calendar dates) when CONTRACTOR plans to commence performance testing of the completed systems, along with a description of the temporary systems and installations planned to allow operational testing to take place.
7. All records produced during the startup and testing program.
8. Systems or unit process or any piece of equipment shall not be started up without the approved Operation and Maintenance Manuals being turned over to the OWNER.
9. Written notice to ENGINEER a minimum of 72 hours prior to beginning of any test.

B. Shop Drawings: Submit for approval the following:
1. A copy of this specification section, with addendum updates included, and all referenced and applicable sections, with addendum updates included, with each paragraph check-marked to indicate specification compliance or marked to indicate requested deviations from specification requirements. Check marks (✓) shall denote full compliance with a paragraph as a whole. If deviations from the specifications are indicated, and therefore requested by the CONTRACTOR, each deviation shall be underlined and denoted by a number in the margin to the right of the identified paragraph, referenced to a detailed written explanation of the reasons for requesting the deviation. The ENGINEER shall be the final authority for determining acceptability of requested deviations. The CONTRACTOR shall furnish equipment and/or services as specified if an exception and/or deviation is rejected. The remaining portions of the paragraph not underlined will signify compliance on the part of the CONTRACTOR with the specifications. Failure to include a copy of the marked-up specification sections, along with justification(s) for any requested deviations to the specification requirements, with the submittal shall be sufficient cause for rejection of the entire submittal with no further consideration.
2. The CONTRACTOR shall submit the preventive maintenance information package as part of the shop drawing submittal package to the ENGINEER for review and approval. **SHOP DRAWING SUBMITTAL PACKAGE WILL NOT BE APPROVED WITHOUT ACCEPTANCE OF PREVENTIVE MAINTENANCE INFORMATION.**

PART 2 - PRODUCTS

2.1 DOCUMENTATION

A. Documentation Plans
1. CONTRACTOR shall develop a records keeping system to document compliance with the requirements of this Section. Calibration documentation shall include identification (by make, manufacturer, model, and serial

number) of all test equipment, date of original calibration, subsequent calibrations, calibration method, and test laboratory.

2. Equipment and system documentation shall include date of test, equipment number or system name, nature of test, test objectives, test results, test instruments employed for the test and signature spaces for the OWNER'S and ENGINEER'S witnesses. A separate file shall be established for each system and item of equipment. These files shall include the following information as a minimum:
   a. Metallurgical tests, if required in detailed Specification Section.
   b. Factory performance tests.
   c. Accelerometer recordings made during shipment, if required in detailed Specification Section.
   d. Field calibration tests1.
   e. Field pressure tests1.
   f. Field performance tests1.
   g. Field operational tests1.
   h. (1 Each of these tests are required even though not specifically noted in detailed Specification Section.)

B. Test Plans:
   1. CONTRACTOR shall develop test plans detailing the coordinated, sequential testing of each item of equipment and system installed under this Contract. Each test plan shall be specific to the item of equipment or system to be tested. Test plans shall identify by specific equipment or tag number each device or control station to be manipulated or observed during the test procedure and the specific results to be observed or obtained. Test plans shall also be specific as to support systems required to complete the test work, temporary systems required during the test work, subcontractors and manufacturers' representatives to be present and expected test duration. As a minimum, the test plans shall include the following features:
      a. Step-by-step proving procedure for all control and electrical circuits by imposing low voltage currents and using appropriate indicators to affirm that the circuit is properly identified and connected to the proper device.
      b. Calibration of all analysis instruments and control sensors.
      c. Performance testing of each individual item of mechanical, electrical, and instrumentation equipment. Performance tests shall be selected to duplicate the operating conditions described in the Contract Documents.
      d. System performance tests designed to duplicate, as closely as possible, operating conditions described in the Contract Documents.
   2. Test plans shall contain a complete description of the procedures to be employed to achieve the desired test environment.
   3. As a condition precedent to receiving progress payments in excess of 75% of the Contract amount, or in any event, progress payments due to CONTRACTOR eight weeks in advance of the proposed date the CONTRACTOR intends to begin any testing work (whichever occurs earliest in the Project Schedule), CONTRACTOR shall have submitted all test plans

required for the systematic field performance and operational tests for all equipment and systems installed under this Contract. Once the ENGINEER has reviewed and approved CONTRACTOR'S test plans, CONTRACTOR shall reproduce the plans in sufficient number for CONTRACTOR'S purposes and an additional 10 copies for delivery to the ENGINEER. No test work shall begin until the CONTRACTOR has delivered the specified number of final test plans to the ENGINEER.

C. Testing Schedule: CONTRACTOR shall provide a startup and testing schedule setting forth the sequence contemplated for performing the test work. The schedule shall be a CPM format, plotted against calendar time, shall detail the equipment and systems to be tested, and shall be coordinated with CONTRACTOR'S Progress Schedule specified in Section 01310, Progress Schedule. The schedule shall show the contemplated start date, duration of the test and completion of each test. The test schedule shall be submitted no later than four weeks in advance of the date testing is to begin. The ENGINEER will not witness any testing work for the purpose of acceptance until CONTRACTOR has submitted a test schedule and the ENGINEER approves. The test schedule shall be updated weekly, showing actual dates of test work, indicating systems and equipment testing completed satisfactorily and meeting the requirements of the Contract Documents.

2.2 SYSTEM AND EQUIPMENT PERFORMANCE TESTS

A. Each item of mechanical, electrical, instrumentation and HVAC equipment installed under this Contract shall be tested to demonstrate compliance with the performance requirements of the Contract Documents. Each electrical, instrumentation, mechanical, piping, and HVAC system installed or modified under this Contract shall be tested in accordance with the requirements of this Section.

B. Once all equipment and systems have been tested individually, CONTRACTOR shall proceed with performance testing in accordance with the requirements of Paragraph 3.3, below, simulating actual operating conditions to the greatest extent possible. CONTRACTOR shall install temporary connections, bulkheads and make other provisions to re-circulate process fluids or otherwise simulate anticipated operating conditions. During the operational testing period, CONTRACTOR'S Quality Assurance Manager and testing team shall monitor the characteristics of each machine and system and report any unusual conditions to the ENGINEER.

PART 3 - EXECUTION

3.1 GENERAL

A. CONTRACTOR shall organize teams made up of qualified representatives of equipment suppliers, subcontractors, CONTRACTOR'S independent testing laboratory, and others, as appropriate, to efficiently and expeditiously calibrate and test the equipment and systems installed and constructed under this Contract. The objective of the testing program shall be to demonstrate, to the OWNER'S and ENGINEER'S complete satisfaction, that the structures, systems, and equipment constructed and installed under this Contract meets all performance requirements and the facility is Substantially Complete and ready for the commissioning process to commence. In addition, the testing program shall produce baseline-operating conditions for the OWNER to use in a Preventive Maintenance Program. The Preventive Maintenance Program shall be provided as part of the vendor supplied equipment Operations and Maintenance Manual as required by Specification Section 01300 Submittals.

3.2 CALIBRATION OF FIXED INSTRUMENTS

A. Calibration of analysis instruments, sensors, gauges, and meters installed under this Contract shall proceed on a system-by-system basis. No equipment or system performance test shall be performed until all instruments, gauges, and meters to be installed in that particular system have been calibrated and the calibration work has been witnessed by the OWNER and ENGINEER.

3.3 PERFORMANCE TESTS

A. General: Performance tests shall consists of the following:
   1. Pressure or leakage tests.
   2. Electrical testing as specified in Division 16, Electrical.
   3. Wiring and piping, individual component, loop, loop commissioning and tuning testing, as specified in Division 17, Instrumentation.
   4. Pre-startup check out for all mechanical and HVAC equipment specified in Division 15, Mechanical. Pre-startup check out procedures shall be reviewed and accepted by the respective equipment manufacturer.
   5. Individual and system tests of all mechanical, electrical, HVAC, and instrumentation equipment and systems shall demonstrate compliance with the performance requirements of the Contract Documents.

B. Performance tests for any individual system shall be performed in the order listed above. The order may be altered only on the specific written authorization of the ENGINEER after receipt of a written request, complete with justification for the change in sequence.

C. Pressure and Leakage Tests: Pressure and leakage tests shall be conducted in accordance with applicable Sections. All acceptance tests shall be witnessed by

the ENGINEER. Evidence of successful completion of the pressure and leakage tests shall be the ENGINEER'S signature on the test forms prepared by CONTRACTOR.

D. Equipment Checkout: Prior to energization (in the case of electrical systems and equipment), all circuits shall be rung out and tested for continuity and shielding in accordance with the requirements of Division 16, Electrical.

E. Component Calibration and Loop Testing: Prior to energization (in the case of instrumentation system and equipment), all loops and associated instruments shall be calibrated and tested, as specified in Division 17, Instrumentation.

F. Electrical Resistance: Electrical resistance testing shall be in accordance with the requirements of Division 16, Electrical.

G. Pre-Start-up Tests: Pre-start-up tests shall include the following
   1. Alignment of equipment using reverse dial indicator method.
   2. Pre-operation lubrication.
   3. Tests in accordance with the manufacturers' recommendations for pre-start preparation and pre-operational check out procedures.

3.4 DISINFECTION

A. CONTRACTOR shall disinfect all new portions of the plant that are located downstream of, and including, reclaimed water pump station, backwash piping, non-potable water system, potable water system, and reclaimed water system. Disinfection shall be completed prior to bringing the specific process or component on-line. All disinfection shall be done in accordance with AWWA C-653.

B. The CONTRACTOR shall provide all chemicals, materials, equipment, and utilities to perform the disinfection.

3.5 EQUIPMENT START-UP

A. The CONTRACTOR in the presence of OWNER and ENGINEER shall place the newly installed equipment and facilities into operation and test, observe, and adjust all items until the units are properly adjusted and operating in accordance with the requirements of the manufacturer's data and the Contract Documents. After the new equipment has been put into operation, CONTRACTOR, ENGINEER, and Plant Operator shall go over in detail the standard operating procedures of the equipment. The work performed by CONTRACTOR shall include, but not be limited to, the following items:
   1. Marking and numbering all valves, gates, and equipment which have been numbered in the Contract Documents. All valves and gates shall be labeled with the appropriate equipment identification tag as shown on the Drawings and specified in Section 10400, Equipment Identification Plates.

2. Labeling switches.
3. Testing of pumps and equipment for proper operation and verifying alignment and capacity.
4. Checking all electrical, electronic, and remotely controlled equipment for proper operation as specified under Section 01400, Quality Control.
5. Marking all new and existing exposed pipelines for identification as specified in Section 09900, Painting, and as labeled on the Drawings for pipe material, size, service, and direction of flow.
6. Testing of unit processes for proper operations.
7. Making all equipment adjustments required.

3.6 SUPERVISION OF INSTALLATION AND START-UP BY MANUFACTURER

A. An experienced, competent, and factory-employed representative of the equipment manufacturer shall visit the site of the work and inspect, check, adjust if necessary, and approve the equipment installation and shall be present when the equipment is placed in operation. The equipment manufacturer's representative shall revisit the job site as often as necessary until any trouble is corrected and the equipment installation and operation is satisfactory to the OWNER. The equipment manufacturer's representative shall furnish to OWNER a written report certifying that the equipment:
   1. Has been properly installed and lubricated.
   2. Is in accurate alignment.
   3. Is free from any undue stress imposed by connecting piping or anchor bolts.
   4. Has been operated under full load conditions and that it operated satisfactorily.

B. A resume of each factory personnel assigned to supervise installation and train OWNER'S personnel shall be submitted to the ENGINEER for approval prior to scheduling training and installing the equipment.

3.7 SYSTEM PERFORMANCE TESTS

A. General: Once all affected equipment has been subjected to the required pre-operational check out procedures and the ENGINEER has witnessed and has not found deficiencies in that portion of the Work, individual items of equipment and systems may be started and operated under simulated operating conditions to determine, as nearly as possible, whether the equipment and systems meet the requirements of these Specifications.

B. For each system performance test phase, the equipment shall be operated a sufficient period of time to determine machine operating characteristics, including noise, temperatures and vibration; to observe performance characteristics; and to permit initial adjustment of operating controls and shall last no less than seven continuous days. When testing requires the availability of auxiliary systems such as looped piping, electrical power, compressed air, control air, or instrumentation

which have not yet been placed in service, CONTRACTOR shall provide acceptable substitute sources, capable of meeting the requirements of the machine, device, or system, at no additional cost to the OWNER. Disposal methods for test media shall be subject to review and approval by the OWNER and ENGINEER. During the performance test period, CONTRACTOR shall obtain baseline-operating data on all equipment with motors greater than one horsepower to include amperage, bearing temperatures, and vibration. The baseline data shall be collected for the OWNER to enter in a Preventive Maintenance Program.

C. Test results shall be within the tolerances set forth in the detailed Specification Sections of the Contract Documents. If no tolerances have been specified, test results shall conform to tolerances established by recognized industry practice. Where, in the case of an otherwise satisfactory performance test, any doubt, dispute, or difference should arise between the ENGINEER and CONTRACTOR regarding the test results or the methods or equipment used in the performance of such test, then the ENGINEER may order the test to be repeated. If the repeat test, using such modified methods or equipment as the ENGINEER may require, confirms the previous test, then all costs in connection with the repeat test will be paid by the OWNER. Otherwise, the costs shall be borne by CONTRACTOR. Where the results of any performance test fail to comply with the contract requirements for such test, then such repeat tests as may be necessary to achieve the contract requirements shall be made by CONTRACTOR at his expense.

D. CONTRACTOR shall provide, at no expense to the OWNER, all power, fuel, compressed air supplies, water, and chemicals, all labor, temporary piping, heating, ventilating, and air conditioning for any areas where permanent facilities are not complete and operable at the time of functional tests, and all other items and work required to complete the functional tests. Temporary facilities shall be maintained until permanent systems are in service.

E. Should the testing period be halted for any reason, the operational testing program shall be repeated, until the specified continuous period has been accomplished without interruption. All process units shall be brought to full operating conditions, including temperature, pressure, flow and level.

F. Record Documents shall conform to the requirements of Section 01300, Submittals, of facilities involved shall be accepted and ready for turnover to the OWNER 72 hours prior to operational testing.

G. Phase Retesting: If under test, any portion of the Work should fail to fulfill the Contract requirements and is adjusted, altered, renewed, or replaced, tests on that portion when so adjusted, altered, removed, or replaced, together with all other portions of the Work as are affected thereby, shall, unless otherwise directed by the ENGINEER, be repeated within reasonable time and in accordance with the specified conditions. CONTRACTOR shall pay to the OWNER all reasonable

expenses incurred by the OWNER, including the costs of the ENGINEER, as a result of repeating such tests.

H. Post-Test Inspection: Once testing has been completed, all machines shall be rechecked for proper alignment and realigned, as required. All equipment shall be checked for loose connections, unusual movement, or other indications of improper operating characteristics. Any deficiencies shall be corrected to the satisfaction of the ENGINEER. All machines or devices which exhibit unusual or unacceptable operating characteristics shall be disassembled and inspected. Any defects found during the course of the inspection shall be repaired or the specific part or entire equipment item shall be replaced to the complete satisfaction of the ENGINEER, at no additional cost to the OWNER.

3.8 TRAINING

A. Provide training per requirements of specification Section 01821, Instruction of Operations and Maintenance Personnel.

++ END OF SECTION ++

SECTION 01660

FIELD TESTS OF EQUIPMENT

PART 1 - GENERAL

1.1 DESCRIPTION

A. In addition to testing required by this Section, CONTRACTOR shall perform all other tests required by detailed Equipment Specifications.

B. No system or subsystem shall be started up for continuous operation unless all components, including instrumentation and monitoring systems, of that system or subsystem has been tested and proven to be operable as intended by the Contract Documents.

1.2 PRELIMINARY TESTS

A. CONTRACTOR shall make preliminary field tests of all equipment as soon as conditions permit.

B. Purpose of tests is to determine if equipment is:
   1. Properly installed.
   2. In compliance with operating cycles.
   3. Operational and free from overheating, overloading, vibration, or other operating problems.

C. CONTRACTOR shall furnish all labor, materials, instruments, fuel, incidentals, and expendables required, unless otherwise provided.

D. CONTRACTOR shall make all changes, adjustments, and replacements required to place equipment in service and test it.

E. ENGINEER and OWNER shall be given sufficient notice prior to witness tests. A minimum 48 hour notice shall be given.

1.3 FINAL TESTS

A. To the maximum extent possible, CONTRACTOR shall perform final field tests of equipment prior to initial start-up and operation of the Project.

B. Purpose of the tests is to demonstrate that equipment is:
   1. Properly installed.
   2. Completely ready for operation by the OWNER.
   3. In compliance with design conditions, material specifications, and all other requirements of the Contract Documents.

C. CONTRACTOR shall furnish all fuel and energy, labor, materials, instruments, chemicals, lubricants, and expendables required for the tests, except where otherwise specified.

D. Until final field tests are completed and approved, CONTRACTOR shall make all necessary changes, adjustments, and replacements.

E. Systems or unit process, or any piece of equipment, shall not be started up without the approved Operation and Maintenance Manuals being turned over to the OWNER.

F. CONTRACTOR shall notify ENGINEER at least 48 hours prior to beginning of tests. CONTRACTOR shall keep notes and data on tests, and submit copy to the ENGINEER. ENGINEER and OWNER'S operating personnel shall witness all tests.

1.4 MANUFACTURERS' AND SUPPLIERS' FIELD AND TEST DATA

A. An experienced, competent, and authorized representative of the manufacturer or supplier of each item of equipment, as required in these Specifications, shall visit the site of the Work and inspect, check, and approve the equipment installation. In each case, the equipment supplier's representative shall be present when the equipment is placed in operation. The equipment supplier's representative shall revisit the job site as often as necessary until all trouble is corrected and the equipment installation and operation is satisfactory to the ENGINEER. Sales representatives shall not be acceptable to perform start-up and training functions.

B. One hard copy and electronic copies of all test and field data collected by the manufacturers/suppliers of equipment during installation supervision and start-up services shall be submitted to the ENGINEER within 14 calendar days after the start-up services are complete. The test and field data shall be submitted, whether specified or not, in the detailed Equipment Specifications and shall include, but are not limited to, tolerance and alignment measurements where applicable to verify equipment has been satisfactorily installed, and all other information collected by the manufacturers/suppliers to satisfy themselves that equipment has been properly installed. The manufacturer shall submit to the ENGINEER a certification on the manufacturer's letterhead stating that the equipment has been properly installed and lubricated, is in accurate alignment, is free from any undue stress imposed by connecting piping or anchor bolts; and has been operated under full load conditions and it operated satisfactorily. In cases where the manufacturer/supplier's representative believes equipment is not properly installed he shall include with this submittal a punch list detailing the problems noted which require correction. The information required under this Section shall be furnished for all equipment and devices requiring installation and start-up services, as specified in these Specifications, including the detailed Mechanical, Electrical, and Instrumentation Specifications.

C. The costs for this Work shall be included in the prices quoted by equipment suppliers. CONTRACTOR shall perform all Work required to install and place into operation the equipment in accordance with the manufacturer's recommendations.

PART 2 - PRODUCTS (NOT USED)

PART 3 - EXECUTION (NOT USED)

++ END OF SECTION ++

SECTION 01700

CONTRACT CLOSEOUT

PART 1 - GENERAL

1.1 SUMMARY

A. Tasks listed under this Section shall be completed prior to Contract closeout and approval of the CONTRACTOR'S final pay request.

1.2 RELATED SECTIONS

A. Section 01300, Submittals.

B. Section 01400, Quality Control

C. Section 01650, Starting of Systems.

1.3 CONTRACT CLOSEOUT SUBMITTALS

A. The following documents are to be submitted as specified to the ENGINEER prior to approval of the CONTRACTOR'S final pay request:
   1. Record Drawings shall be furnished by the CONTRACTOR. One set of bluelines annotated to show all changes shall be delivered by the CONTRACTOR to the ENGINEER. The Record Drawings shall reflect all changes made by change order, addenda, field order, work directive, and any other changes made and approved during the course of the Work.
   2. CONTRACTOR'S Affidavit of Payment of Debts and Claims.
   3. CONTRACTOR'S Affidavit of Release of Liens.
   4. Consent of Surety.
   5. Labor and Material Lien Waivers: These documents shall be furnished by the CONTRACTOR and all subcontractors. These lien waivers shall be attached to the CONTRACTOR'S Affidavit of Release of Liens.
   6. Copies of written warranties shall be furnished for each individual item of equipment. The names, addresses, and phone numbers of the manufacturer's representatives shall be included.
   7. Operation and Maintenance Manuals shall be furnished for each individual item of equipment as specified in Section 01300, Submittals.
   8. Equipment manufacturers' start-up reports shall be furnished as specified in Section 01400, Quality Control.
   9. The CONTRACTOR shall submit all maintenance stock items, spare parts, and special tools.
   10. All training videos shall be submitted in two (2) external hard drives in accordance with Section 01650, Starting of Systems.

1.4 SITE CONDITIONS

A. Prior to approval of the CONTRACTOR'S final pay request and after Work has been completed, the CONTRACTOR shall dispose of all waste material.

B. All areas shall be restored to a condition equal to or better than the original.

C. Site grading shall be performed to the lines and grades as shown or conforming to adjacent contours.

1.5 MAINTENANCE AND GUARANTEE

A. The CONTRACTOR shall comply with the maintenance and guarantee requirements contained in the General Conditions.

B. Replacement of earth fill or backfill, where it has settled below the required finish elevations, shall be considered as a part of such required repair work and any repair or resurfacing constructed by the CONTRACTOR which becomes necessary by reason of such settlement shall likewise be considered as a part of such required repair work, unless the CONTRACTOR shall have obtained a statement in writing from the affected private owner or public agency releasing the OWNER from further responsibility in connection with such repair or resurfacing.

C. The CONTRACTOR shall make all repairs and replacements promptly upon receipt of written order from the OWNER. If the CONTRACTOR fails to make such repairs or replacements promptly, the OWNER reserves the right to do the Work and the CONTRACTOR and his surety shall be liable to the OWNER for the cost thereof.

1.6 BOND

A. The CONTRACTOR shall provide a bond to guarantee performance of the provisions contained in Paragraph 1.5, above, and the General Conditions.

PART 2 - PRODUCTS (NOT USED)

PART 3 - EXECUTION (NOT USED)

++ END OF SECTION ++

SECTION 01710

CLEANING

PART 1 - GENERAL

1.1 SUMMARY

A. This Section outlines requirements for cleaning of the Project Work. This Section is complementary to the General Conditions and nothing herein shall be considered to waive any requirements of the General Conditions.

1.2 REQUIREMENTS OF REGULATORY AGENCIES

A. Safety and Insurance Standards: Maintain Project in accordance with the following safety and insurance standards:
   1. State Industrial Commission of Arizona (OSHA).

B. Fire Protection: Store volatile waste in covered metal containers and remove from premises daily.

C. Pollution Control: Conduct cleanup and disposal operations to comply with local ordinances and anti-pollution laws. Burning or burying of rubbish and waste material on the Project site is not permitted. Disposal of volatile fluid waste (such as mineral spirits, oil, or paint thinner) in storm or sanitary sewer systems or into streams or waterways is not permitted.

PART 2 - PRODUCTS

2.1 CLEANING MATERIAL

A. Use only cleaning materials recommended by manufacturer of surface to be cleaned. Use cleaning materials only on surfaces recommended by cleaning material manufacturer.

PART 3 - EXECUTION

3.1 DURING CONSTRUCTION

A. During the construction period the material to be used in the Work shall be kept in an orderly manner, neatly stacked or piled.

B. Clean up frequently (at least weekly) all refuse, rubbish, scrap materials, and debris caused by operations, to the end that at all times the site of the Work shall present a neat, orderly, and workmanlike appearance. Sprinkle dusty debris with water.

C. Provide for the disposal of all waste products, trash, debris, etc., and make necessary arrangement for legal disposal of same off the site. Never throw rubbish from windows or other parts of building. Lower waste materials in a controlled manner with as few handling as possible.

D. Remove all surplus material, false-work, temporary structures, including foundations thereof, plant of any description and debris of every nature resulting from operations and put the site in a neat, orderly condition.

E. Vacuum clean interior building areas when ready to receive finish painting and continue vacuum cleaning on an as-needed basis until building is ready for acceptance.

F. Schedule cleaning operation so that dust and other contaminants resulting from cleaning process will not fall on wet, newly painted surfaces.

G. General Contractor shall provide trash gondolas or containers for use by all trades.

3.2 FINAL CLEANING

A. Use experienced workmen or professional cleaners for final cleaning. Provide adequate ventilation during use of volatile or noxious substances.

B. Besides general broom cleaning, do following special cleaning for all trades at completion of Work:
   1. Remove putty stains from glass; wash, polish same inside and outside. Exercise care not to scratch glass.
   2. Remove marks, stains, fingerprints, other soil, dirt from painted, decorated, or stained work.
   3. Clean, polish, and wax woodwork.
   4. Clean and polish hardware for removal of stains, dust, dirt, paint, and the like.
   5. Remove spots, soil, paint from tile and similar Work; wash same.
   6. Clean fixtures, equipment; remove stains, paint, dirt, and dust.
   7. Remove temporary floor protections.
   8. Clean and polish all floors.
   9. Remove all temporary protections at the site.
   10. Clean exterior and interior metal surfaces including doors and windows of oil, stains, dust, dirt, paint and the like.
   11. Clean and vacuum all carpeted areas.

C. Make buildings ready for occupancy in all respects. Lay heavy building paper in main circulation areas to protect the floors until final inspection and acceptance.

D. All existing improvements inside or outside the property which are disturbed, damaged, or destroyed by the Work under the Contract shall be restored to the condition in which they originally were or to the satisfaction of the ENGINEER.

++ END OF SECTION ++

SECTION 01715

TESTING OF HYDRAULIC STRUCTURES

PART 1 - GENERAL

1.1 SUMMARY

A. Scope:
   1. CONTRACTOR shall provide all labor, material, tools, equipment and incidentals as shown, specified and required to clean, flush and test structures.
   2. The Work also shall include all labor and materials required to prepare a structure for testing, convey water to the testing location, perform the testing, and all labor and materials required to drain and dispose of water used for testing.

B. Hydraulic Structures Scheduled for Hydrostatic Testing: Clean and test the structures listed below. Visual tests are acceptable for existing structures. Full hydrostatic testing described in this specification section shall be conducted for all new structures.
   1. RWIF Raw Water Pump Station Wet Well.
   2. RWIF Membrane Facility Inlet Channel.
   3. RWIF Membrane Facility Membrane Trains.
   4. RWIF CIP Tank at Membrane Facility

C. Water for Testing:
   1. Water for initial testing will be furnished by the OWNER.
   2. CONTRACTOR shall provide all temporary piping, hose, valves, backflow preventers, appurtenances, and services required for testing.
   3. CONTRACTOR shall convey the water to the testing location.
   4. Water for testing may be withdrawn from:
      a. Nearest fire hydrant.

D. The maximum rate at which water may be withdrawn is 100 gpm. CONTRACTOR shall provide on the withdrawal piping, downstream of the backflow preventer, a valve to control the rate of flow and a flow meter. The flow meter shall be calibrated within one year and field calibrated/verified prior to the date of its use, and its certification of calibration shall be submitted to the ENGINEER for approval.
   1. Cost of water for re-testing shall be paid by CONTRACTOR to OWNER at OWNER'S standard rates.

E. Testing of piping is specified under Section 15051, Buried Piping Installation, and Section 15052, Exposed Piping Installation.

1.2 Related Sections

A. Section 01710, Cleaning.

B. Section 03300, Cast-In-Place Concrete.

C. Section 15051, Buried Piping Installation.

D. Section 15052, Exposed Piping Installation.

1.3 DEFINITIONS

A. The term "hydraulic structures" is defined as tanks, channels, and other structures through which liquid is conveyed or that hold liquid. Hydraulic structures include structures that are open to the atmosphere and structures with closed tops. Hydraulic structures, include but are not limited to, wet wells, junction chambers equalization tanks, storage tanks, treatment process tanks such as grit chambers, clarifiers, aeration tanks, filter beds, contact tanks, and other channels or tanks as designated herein.
   1. Excluded are structures where cleaning and testing are specified under other Sections or contracts.

1.4 SUBMITTALS

A. Provide written notice of the proposed testing schedule for a given structure for review by the ENGINEER and OWNER at least 28 days prior to the scheduled testing. Include proposed plans for water conveyance, control, and disposal. Testing will not commence without approval of ENGINEER.

B. Shop Drawings: Submit for approval the following:
   1. Cleaning procedures.
   2. Hydrostatic testing procedures, methods, equipment, coordination, and schedules.
   3. Report for each test.

C. Shop Drawings: Submit for approval the following:
   1. A copy of this specification section, with addendum updates included, and all referenced and applicable sections, with addendum updates included, with each paragraph check-marked to indicate specification compliance or marked to indicate requested deviations from specification requirements. Check marks (✓) shall denote full compliance with a paragraph as a whole. If deviations from the specifications are indicated, and therefore requested by the CONTRACTOR, each deviation shall be underlined and denoted by a number in the margin to the right of the identified paragraph, referenced to a detailed written explanation of the reasons for requesting the deviation. The ENGINEER shall be the final authority for determining acceptability of

requested deviations. The CONTRACTOR shall furnish equipment and/or services as specified if an exception and/or deviation is rejected. The remaining portions of the paragraph not underlined will signify compliance on the part of the CONTRACTOR with the specifications. Failure to include a copy of the marked-up specification sections, along with justification(s) for any requested deviations to the specification requirements, with the submittal shall be sufficient cause for rejection of the entire submittal with no further consideration.

2. The CONTRACTOR shall submit the preventive maintenance information package as part of the shop drawing submittal package to the ENGINEER for review and approval. **SHOP DRAWING SUBMITTAL PACKAGE WILL NOT BE APPROVED WITHOUT ACCEPTANCE OF PREVENTIVE MAINTENANCE INFORMATION.**

PART 2 - PRODUCTS

2.1 MATERIALS

A. Temporary valves, bulkheads, and other water control equipment and materials, shall be determined by CONTRACTOR subject to the ENGINEER'S review and approval. No materials shall be used that would be injurious to the construction or its future function.

PART 3 - EXECUTION

3.1 CLEANING

A. Cleaning Requirements:
   1. Remove all scaffolding, planks, tools, rags, dirt, debris, and material not part of the structure prior to testing.
   2. Thoroughly clean the walls, floors, and operating equipment by sweeping, high-pressure wash, scrubbing, or other methods approved by ENGINEER.
   3. Remove all water, dirt, or foreign material accumulated during cleaning from the hydraulic structure. Provide temporary pumps, piping, and facilities as required to discharge water from the cleaning operation in a manner approved by ENGINEER.
   4. Do not proceed with testing until ENGINEER has approved the results of the cleaning operation.
   5. Cleaning shall conform to the requirements of Section 01710, Cleaning.

3.2 GENERAL FOR TESTING

A. The following requirements apply:
   1. Each hydraulic structure shall be tested separately.

B. Hydraulic structures shall be free of visible leakage. Repair leaks in a manner subject to ENGINEER'S approval and in accordance with the Contract Documents.

C. The structure shall be tested prior to the application of exterior coating systems and the installation of masonry block veneer, if applicable.

D. The after testing release of water from structures, shall be as approved by the ENGINEER.

3.3 HYDROSTATIC TESTING OF HYDRAULIC STRUCTURES

A. Analysis of data from hydrostatic tests of hydraulic structures shall be performed by CONTRACTOR in accordance with the requirements of ACI 350.1 and as specified herein. CONTRACTOR shall supply all materials and labor to obtain the test data.

B. Prior to the start of hydrostatic testing, the following shall be met.
   1. All elements of the structure that will resist pressure exerted by the retained liquid shall be in place and at specified strength levels. Concrete shall be fully cured.
   2. Structure walls shall not be backfilled and, if damp proofing is specified, coated with damp proofing prior to leakage testing, unless otherwise approved by ENGINEER.
   3. All valves, gates, blind flanges, and other items, other than concrete, that control the flow of or otherwise retain the liquid contents of the structure, shall be checked for water-tightness. If not watertight, CONTRACTOR shall provide measures to ensure water-tightness during the hydrostatic test.
   4. Defective concrete shall be repaired.
   5. CONTRACTOR shall notify ENGINEER and OWNER a minimum of 24 hours prior to the start of filling of the structure for hydrostatic testing.
   6. Concrete hydraulic structures shall remain filled with clean water for an initial 48 hour period to allow for adsorption. Following this initial period, CONTRACTOR shall add make-up water to fill the hydraulic structure to the specified water surface test elevation.

C. Fill the hydraulic structure with clean water to the maximum water surface test elevation specified. Where no test elevation is specified and fluid level in the structure will normally be controlled by a weir, fill the structure to an elevation 6-inch below the weir crest. Where no test elevation is indicated and the structure does not have a flow control weir, the test elevation shall be 2 feet below the top of the structure.

D. Filling Hydraulic Structures with Water:
   1. Fill the portion of the hydraulic structure to be tested at a rate not to exceed two vertical feet per hour.

2. During filling, provide a backflow preventer at the point where water is withdrawn from the existing potable water system, if applicable.

E. After water has been brought to the test elevation and the specified wetting period has elapsed, inspect the exposed surfaces of the structure for leakage. Repair locations where leakage or weeping is evident prior to the start of hydrostatic testing.

F. Hydrostatic test duration shall be determined by the ENGINEER based on ACI 350.1, but shall not be less than 24 hours.

G. Allowable Leakage:
1. Leakage is defined as the quantity of water that must be supplied to the hydraulic structure or any section thereof to maintain the water level within 3-inches of the specified water surface test elevation during the hydrostatic test, plus the amount of water required to fill the hydraulic structure to the specified water surface test elevation at the conclusion of the hydrostatic test, plus precipitation, minus an allowance for evaporation if applicable.
2. For concrete structures without lining of interior wetted surfaces, the allowable leakage is 0.075% of the volume tested per 24 hour period.
3. For concrete structures with interior wetted surfaces lined with a waterproof material, the allowable leakage is 0.050% of the volume tested per 24 hour period.

H. Measurement Locations:
1. Structures or structure cells that are less than 1,000 Sq. ft. in water surface area shall have measurements of water level taken at a minimum of two locations that are approximately 180 degrees apart.
2. Structures or structure cells that are greater than 1,000 Sq. ft. in water surface area shall have measurements of water level taken at a minimum of four locations that are approximately 90 degrees apart.
3. Each measurement location shall be marked and given a reference number. A reference point shall be marked on the face of the wall above the test water surface in a manner that will prevent movement or deterioration of the reference point mark during the test.
4. Measurement locations shall be located so that the effects of wave action and wind are minimized.

I. Evaporation and Precipitation Measurement:
1. In hydraulic structures that are open to the atmosphere, a floating, restrained, partially filled, plastic calibrated open-topped container not less than 18-inches in diameter and depth shall be floated in the tank, and held in position near each measurement location. Calibration increments shall be 0.1-inch or less.

2. Containers shall be located so that they are not shaded by the structure's walls, and are away from overhead items such as beams, pipes, and walkways.

J. Test Measurements:
   1. Do not start hydrostatic tests when severe weather conditions, such as heavy precipitation, high winds, major changes in average daily temperature, and other severe conditions are predicted.
   2. Record the following measurements at each test location at the start of the test period and at 12-hour intervals thereafter.
      a. Distance from reference point to test water surface.
      b. Depth of water in the evaporation-precipitation containers.
      c. Temperature of the test water at a point 18-inches below the water surface.
      d. Temperature of the water in the evaporation-precipitation containers at mid-depth.
   3. If the water surface is subject to wave action at the measurement location, the average water surface elevation of the wave oscillations shall be recorded as the data.
   4. The change in the water surface elevation at each measurement location shall be averaged and adjusted as follows:
      a. The total change in the hydraulic structure's water surface elevation shall be adjusted by the average change in water surface elevation in the evaporation-precipitation containers.
      b. Where the averaged water temperature measurements vary by more than three degrees from start to completion of the test period, adjustment in the test volume shall be determined by the change of the density of water resulting from the change in the average water temperature.
   5. Determination of Leakage:
      a. Provide a test container filled with a known quantity of water at the start of the test. Attach the test pump suction to the test container.
      b. Pump water from the test container into the hydraulic structure with the test pump to maintain the water level in the hydraulic structure within 3-inches of the specified test elevation for the duration of the test period.
      c. At the conclusion of the test, pump water from the container into the hydraulic structure to attain the specified test elevation.
      d. Measure the water remaining in the container and record the amount used during the test on the test report.

K. Criteria for Acceptance:
   1. The hydrostatic test will pass if the measured leakage is less than the allowable leakage and no leaks or weeping are observed.
   2. The hydrostatic test shall be considered to have failed if the allowable leakage is exceeded or if leakage or weeping is observed.

3. If the test becomes unreliable due to excessive precipitation or other external factors, the test shall be re-started.
4. If a hydrostatic test fails, the structure may be re-tested immediately without repairs if approved by the ENGINEER. If the subsequent hydrostatic test fails, CONTRACTOR shall repair probable areas of leakage and repeat the hydrostatic test.
5. Re-test the structure until it meets the specified criteria for acceptance. Repair probable leakage areas before testing.

L. Reuse and Disposal of Water Used in Hydrostatic Tests:
1. CONTRACTOR shall obtain written approval of the ENGINEER before water used in one hydrostatic test is pumped to a different hydraulic structure for reuse in a subsequent test.

M. The hydraulic structure shall not be backfilled or damp-proofed until acceptance of the hydrostatic test by the ENGINEER.

3.4 TESTING OF APPURTENANT PIPING

A. Piping appurtenant to hydraulic structures shall be tested as specified in applicable Sections.

++ END OF SECTION ++

SECTION 01720

RECORD DOCUMENTS

PART 1 - GENERAL

1.1 DESCRIPTION

A. Maintain and provide the ENGINEER with Record Documents as specified below, except where otherwise specified or modified in Division 2, Site Construction, through Division 17, Instrumentation.

B. Definitions
   1. Contract Documents: The contract documents include the drawings, specifications, and addenda developed and furnished to the CONTRACTOR at the beginning of construction.
   2. As-Built Drawings: As-built drawings are an annotated set of drawings prepared by the CONTRACTOR. They show, in red, as-constructed changes to the original Contract Documents that have been made during the construction process. The As-Built Drawings may include supplemental drawings to provide the necessary detail, comply with project standards or where annotation would otherwise be impractical.
   3. Record Drawings: Record Drawings are prepared by the ENGINEER and reflect as-constructed changes that the CONTRACTOR annotated in the As-Built Drawings.
   4. Record Documents: The Record Documents include Record Drawings, specifications, addenda, approved shop drawings, samples, photographs, change orders, other modifications to the Contract Documents, test records, survey data, field orders, Request for Information, submittals, Warranty certificates, and all other documents pertinent to the CONTRACTOR'S Work.

C. Maintenance of Documents:
   1. Three sets of black line sets of plans, including any Addenda, of the Drawings will be furnished to CONTRACTOR by the OWNER.
   2. Maintain in CONTRACTOR'S field office in clean, dry, legible condition complete sets of the following: Drawings, Specifications, Addenda, approved Shop Drawings, Samples, Photographs, Change Orders, other modifications of Contract Documents, test records, survey data, Field Orders, and all other documents pertinent to CONTRACTOR'S Work.
   3. Provide files and racks for proper storage and easy access. File in accordance with filing format of Construction Specification Institute (CSI), unless otherwise approved by ENGINEER.
   4. Make documents available at all times for inspection by ENGINEER and OWNER.
   5. Record Documents shall not be used for any other purpose and shall not be removed from CONTRACTOR'S office without ENGINEER'S approval.

6. Any contractually required testing provided by others shall be thoroughly documented by the CONTRACTOR and maintained with the project Record Documents. All testing results shall be maintained in their own separate log for the project; being kept current weekly and made readily available for viewing at any time.

D. Marking System: Changes, revisions, additions and deletions, to the record set of Drawings shall be marked in Red.

E. Recording:
   1. Submit as-built drawings and make a record of the locations of all work completed as part of the project. The as-builts must indicate the locations of the beginning(s) and end(s) of the construction, and all valves, fire hydrants, pipe fittings, service connections and appurtenances. They must also show locations and elevations where significant elevation changes occur or changes in direction in all pipe alignments. Their locations must be shown by stationing and dimensioning from appropriate monument lines or in their absence appropriate lot lines, property lines or easement line references.
   2. Label the Cover Sheet, Index and each supplemental sheets of each document "PROJECT RECORD" in 2-inch high printed letters.
   3. Keep the As-Built Drawings current. CONTRACTOR'S refusal, failure or neglect to maintain current As-Built Drawings shall constitute sufficient basis for the ENGINEER to recommend the withholding of some or all of any payment due.
   4. Do not permanently conceal any Work until required information has been recorded.
   5. Drawings: Legibly mark to record actual construction including:
      a. Depths of various elements of foundation in relation to datum.
      b. Horizontal and vertical location of underground utilities and appurtenances referenced to permanent surface improvements.
      c. Location of internal utilities and appurtenances concealed in construction referenced to visible and accessible features of structure.
      d. Field changes of dimensions and details.
      e. Changes made by Change Order or Field Order.
      f. Details not on original Drawings.
   6. Specifications and Addenda: Legibly mark up each Section to record:
      a. Manufacturer, trade name, catalog number, and supplier of each product and item of equipment actually installed.
      b. Changes made by Change Order or Field Order.
      c. Other matters not originally specified.

F. Record Drawings:
   1. As-Built Drawings shall be prepared for all the Work included in the Contract. On a weekly basis, furnish to the ENGINEER a full size annotated copy of the As-Built Drawings that include changes from the previous week's As-Built Drawing submittal. Annotations shall include redlined "clouds" of only those

changes from the previous week's submittal. The redlined As-Built Drawings shall show the actual in-place installation of the items installed under this Contract. The redlined As-Built Drawings shall show the Work in plan and sections as required for clarity with reference dimensions and elevations that will be used to develop complete Record Drawings.

2. Develop and furnish to the ENGINEER, redlined Instrumentation and Control and Electrical Drawings showing one line diagrams with all conduit and wire sizes shown of the distribution systems and the actual in-place grounding system, lighting arrangement, motor control centers, corrected wiring diagrams, equipment and conduit and cable plans.
    a. The Contract Drawings may be used as a starting point in developing these Instrumentation and Control and Electrical As-Built Drawings. Subcontractor and manufacturer drawings may be included in this drawing package. The drawing package must be fully integrated and include the necessary cross references between drawings. The drawing package shall include interconnection and termination details to equipment furnished under this Contract.
    b. All As-Built Drawings must be submitted on a weekly basis for approval of the ENGINEER. This shall include the following composite drawings for the system being furnished:
        1) Schematic (Elementary) Diagrams: This shall include, but not be limited to, complete schematics including items furnished by others for the following:
            a) Motor Control Circuits for Starters furnished under this Contract.
            b) HVAC Control Panels furnished under this Contract.
        2) Wiring (Connection) Diagrams: These shall be included for all pre-wired equipment furnished under this Contract.
        3) Interconnection Diagrams: These shall include all interconnections to be furnished under this Contract.
        4) Conduit and Cable Schedules: These shall include all conduit and cable furnished under this Contract.
        5) Dimension of Outline Drawings: These shall include all equipment furnished under this Contract.
        6) Power and Lighting Layout Drawings: These shall include all conduits and wiring furnished under this Contract.
3. In addition to the redlined As-Built Drawings, prepare and submit CAD ".dwg" files, version 2017 or later, for all supplemental drawings used to complete the As-Built Drawings.
4. Survey results shall be posted to the as-builts on a weekly basis.

G. Submittals:
1. Acceptance of CONTRACTOR'S monthly application for payment shall be dependent on the ENGINEER'S acceptance and agreement that CONTRACTOR'S As-Built Drawings and weekly submittals are complete, thorough and acceptable in showing all Work up through and including such

work as CONTRACTOR is claiming for completion and payment on CONTRACTOR'S application for payment. Any items which do not appear on the As-Built Drawings in complete and acceptable form shall not be paid for in CONTRACTOR'S monthly payment.

2. Examination by the ENGINEER of CONTRACTOR'S As-Built Drawings will be made on a weekly basis to determine completion for consideration of monthly pay application. Also, make available all As-Built Drawings at all times to the ENGINEER for examination.
3. Prior to Completion of the Work, deliver final As-Built Drawings to ENGINEER. Substantial completion will not be made until satisfactory final As-Built Drawings are received by ENGINEER.
4. Accompany final and weekly submittals with transmittal letter containing:
   a. Date.
   b. Project title and number.
   c. CONTRACTOR'S name and address.
   d. Title and number of each As-Built Drawings.
   e. Certification that each document as submitted is complete and accurate.
   f. Signature of CONTRACTOR, or his authorized representative.

PART 2 - PRODUCTS (NOT USED)

PART 3 - EXECUTION (NOT USED)

++ END OF SECTION ++

SECTION 01730

OPERATION AND MAINTENANCE DATA

PART 1 - GENERAL

1.1 DESCRIPTION

A. Provide Operation and Maintenance Data in the form of instructional manuals for use by the OWNER'S personnel for:
   1. All equipment and systems.
   2. All valves, pumps, and related accessories.
   3. All instruments and control devices.
   4. All electrical gear.

B. Training or start-up on any system, process, or piece of equipment shall not be allowed until Operation and Maintenance Manuals and Lesson Training Plans are approved by the ENGINEER, and the approved Operation and Maintenance Manuals have been turned over to the OWNER.

C. Definitions:
   1. Operation and Maintenance Data:
      a. The term "Operation and Maintenance Data" includes all product related information and documents which are required for preparation of the station Operation and Maintenance Manual. It also includes all data which shall accompany said manual as directed by current regulations of any participating government agency.
      b. Required Operation and Maintenance Data includes, but is not limited to, the following:
         1) Complete, detailed written operating instructions for each product or piece of equipment including equipment function; operating characteristics; limiting conditions; operating instructions for start up, normal, and emergency conditions; regulation and control; and shut down.
         2) Complete, detailed written preventive maintenance instructions as defined below.
         3) Recommended spare parts lists, by generic title and identification number, and local sources of supply for parts.
         4) Written explanations of all safety considerations relating to operation and maintenance procedures.
         5) Name, address, and phone number of manufacturer, manufacturer's local service representative, and subcontractor or installer.
         6) Copy of all approved Shop Drawings, and a copy of the warranty bond and service contract as applicable, including circuit diagrams, schematics, and functional Drawings.

7) Control Diagrams: Internal and connection wiring, including logic diagrams, wiring diagrams for control panels, ladder logic for computer based systems, and connections between existing systems and new additions, and adjustments such as calibrations and set points for relays, and control or alarm contact settings. Provide all programming/wiring documentation needed for "in-house" troubleshooting and customizing.
8) Final test data, where applicable, shall be submitted as an appendix when completed.
9) Disassembly, reassembly, installation, alignment, adjustment, and checking instructions.

2. Preventive Maintenance Instructions:
   a. The term "Preventive Maintenance Instructions" includes all information and instructions required to keep a product or piece of equipment properly lubricated, adjusted, and maintained so that the item functions economically throughout its full design life.
   b. Preventive Maintenance Instructions include, but are not limited to, the following:
      1) A written explanation with illustrations for each preventive maintenance task.
      2) Recommended schedule for execution of preventive maintenance tasks.
      3) Lubrication charts.
      4) Table of alternative lubricants.
      5) Trouble shooting instructions.
      6) List of required maintenance tools and equipment.

D. Submittals:
   1. General: Submit operations and maintenance data to the ENGINEER within 60 days after approval of Shop Drawings, unless noted otherwise.
   2. Number of Copies: One hard copy of each item.
      a. One preliminary copy of each O&M Manual shall be submitted to the ENGINEER for approval within 30 days of the approval of the Shop Drawing, which indicated further submittals are not required. The O&M Manual shall conform to the requirements as specified herein.
      b. 60 days prior to placing the equipment into service, submit one hard copies and one soft copy of the approved O&M Manual (except for field test data) to the ENGINEER.
      c. Soft copy shall be in CD format and shall include all information provided in hard copy. Text shall be in ".pdf" format. Drawings and figures shall be in AutoCAD ".dwg", or bitmap ".bmp", tiff ".tif", ipeg ".jpg", gif ".gif", or pc paint brush ".pcx".
   3. Letter of Transmittal: Provide a letter of transmittal with each submittal and include the following in the letter:
      a. Date of submittal.

b. Contract title and number.
c. CONTRACTOR'S name and address.
d. A list of the attachments and the Specification Sections to which they relate.
e. Reference to or explanation of related submittals already made or to be made at a future date.

4. Format Requirements:
   a. Use 8-1/2-inch by 11-inch paper of high rag content and quality. Larger Drawings or illustrations are acceptable if neatly folded to the specified size in a manner which will permit easy unfolding without removal from the binder. Provide reinforced punched binder tab, or provide flyleaf for each product.
   b. All text must be legible typewritten or machine printed originals or high quality copies of same.
   c. Each page shall have a binding margin of approximately 1-1/2-inches and be punched for placement in a 3-ring loose-leaf binder. Provide binders. Identify each binder with the following:
      1) Title "OPERATING AND MAINTENANCE INSTRUCTIONS".
      2) Title of Project.
      3) Identity of building or structure as applicable.
      4) Identity of general subject matter covered.
   d. Use divides and indexed tabs between major categories of information such as operating instructions, preventive maintenance instructions, or other. When necessary, place each major category in a separate binder.
   e. Provide a Table of Contents for each binder.
   f. Identify products by their functional names in the table of contents and at least once in each Chapter or Section. Thereafter, abbreviations and acronyms may be used if their meaning is explained in a table in the back of each binder. Use of model or catalog numbers or letters for identification is not acceptable.
   g. Upon completion of the installation of each item of equipment, the CONTRACTOR shall provide Drawings of the local control panel to be added to the O&M Manual.
   h. Indicate all components of the equipment on catalog pages by highlighting or some other clearly definable medium for ease of identification.
   i. Final test data determined after installation of the equipment shall be submitted as an appendix to the Operations and Maintenance Manuals.

E. A copy of this specification section, with addendum updates included, and all referenced and applicable sections, with addendum updates included, with each paragraph check-marked to indicate specification compliance or marked to indicate requested deviations from specification requirements. Check marks (✓) shall denote full compliance with a paragraph as a whole. If deviations from the specifications are indicated, and therefore requested by the CONTRACTOR, each deviation shall be underlined and denoted by a number in the margin to the right of the identified

paragraph, referenced to a detailed written explanation of the reasons for requesting the deviation. The ENGINEER shall be the final authority for determining acceptability of requested deviations. The CONTRACTOR shall furnish equipment and/or services as specified if an exception and/or deviation is rejected. The remaining portions of the paragraph not underlined will signify compliance on the part of the CONTRACTOR with the specifications. Failure to include a copy of the marked-up specification sections, along with justification(s) for any requested deviations to the specification requirements, with the submittal shall be sufficient cause for rejection of the entire submittal with no further consideration.

F. The CONTRACTOR shall submit the preventive maintenance information package as part of the shop drawing submittal package to the ENGINEER for review and approval. **SHOP DRAWING SUBMITTAL PACKAGE WILL NOT BE APPROVED WITHOUT ACCEPTANCE OF PREVENTIVE MAINTENANCE INFORMATION.**

Operation & Maintenance Schedule

Specification #	Specification Title
08331	Overhead Coiling Doors
11217	Sample Pumps
11220	Inline Rapid Mixers
11285	Hydraulic Gates
11295	Hydraulic Valves
11311	Submersible Pumps
11314	End Suction Centrifugal Pumps
11320	Self-Cleaning Strainers
11371	Positive Displacement Blowers
11372	Air Compressors
11500.1	Membrane Equipment System
11715	Chemical Metering Pumps and Appurtenances
13128	Electric Operator
13207	Fiberglass Reinforced Plastic Above Ground Storage Tanks
13445	Pneumatic Controllers and Control Valves
13447	Electric Motor Actuator
13930	Wet Pipe Fire Extinguishing System
14630	Hoists, Trolleys and Monorail
15441	Sump Pumps
15680	Evaporative Coolers
15781	Air Conditioning Unit

16001	Packaged Systems and Packaged Control Panels
16062	Lightning Protection
16161	Control Panels
16190	Supporting Devices
16225	Electric Motors 250HP or Less
16282	Surge Protection Devices
16321	Oil Filled Substation Transformers
16341	Medium Voltage Load Interrupter Switchgear
16430	Customer Power Metering System
16440	Disconnect Switches
16461	Transformers Dry Type
16470	Panelboards
16474	Motor Control Equipment
16481	Motor Control Centers (MCC)
16482	Solid State Motor Controllers
16485	Variable Frequency Drives for - Low Voltage
16494	Manual Transfer Switch
16500	Lighting
16611	Static Uninterrupted Power Supply
16720	Fire Surveillance and Alarm System
16912	Ethernet Network Equipment
17111	Float Switches
17120	Pressure Transmitters
17121	Pressure Switches and Gauges
17122	Level Transmitters – Pressure Type
17124	Submersible Level Transmitter
17125	Radar Level Transmitter
17134	Flow Switches
17137	Magnetic Flow Meters
17138	Insertion Mass Flow Meters
17150	Limit and Position Switches
17221	Electronic 4-20 mA Indicators
17222	Signal Conditioners
17325	Turbidity and TSS Analyzer
17420	pH/ORP Sensors and Analyzers
17421	Chlorine Residual Analyzer
17451	AB PLC System Hardware ControlLogix

17452	AB Systems Software and Accessories
17455	AB Operator Interface Terminal Software and Hardware
17458	Modicon Unity PLC System Software and Accessories
17461	Modicon M340 Programmable Logic Controller System (M340)
17462	Modicon Unity PLC System Software and Accessories

PART 2 - PRODUCTS (NOT USED)

PART 3 - EXECUTION (NOT USED)

++ END OF SECTION ++

SECTION 01750

SPARE PARTS AND MAINTENANCE MATERIALS

PART 1 - GENERAL

1.1 DESCRIPTION

A. 60 days after approval of the Shop Drawing of the equipment specified in the individual Sections, CONTRACTOR shall furnish spare parts data and maintenance material for equipment. The data shall include a complete list of parts and supplies, with current unit prices and source or sources of supply.

B. Spare parts and materials required to be supplied in the Contract Documents shall be furnished in manufacturer's unopened cartons, boxes, crates or other protective covering suitable for preventing corrosion or deterioration for the maximum length of storage that may be normally anticipated. They shall be clearly marked and identified as to the name of manufacturer or supplier, applicable equipment, part number, description and location in the equipment. All parts shall be protected and packaged for a shelf life of at least 10 years.

C. During construction, store parts in buildings or trailers with floor, roof, and closed sides and in accordance with manufacturers' recommendations. Protect from weather, condensation, and humidity.

D. Parts and materials shall be delivered to the OWNER upon Substantial Completion of the Work or start-up. CONTRACTOR shall then place them in permanent storage rooms or areas approved by the OWNER. The turnover procedures shall be developed by the ENGINEER.

E. Provide a Letter of Transmittal and Spare Parts Receiver Form including the following:
   1. Date of letter and transfer of parts and material.
   2. Contract title and number.
   3. CONTRACTOR'S name and address.
   4. Transmittal should list applicable Specification Sections for each set of spare parts supplied.
   5. Spare Parts Receiver Form.

F. CONTRACTOR shall be fully responsible for loss or damage to parts and materials until they are transmitted to the OWNER.

PART 2 - PRODUCTS (NOT USED)

PART 3 - EXECUTION (NOT USED)

SPARE PARTS RECEIVER

SPECIFICATION SECTION 01750

CONTRACTOR PLEASE FILL OUT:

MANUFACTURER:_____

ITEM DESCRIPTION:_____

COST:_____

MANUFACTURER PART NUMBER:_____

SUPPLIER:_____

CROSS REFERENCE NUMBER:_____

VENDOR INFORMATION:_____

VENDOR ORDER PART NUMBER:_____

PART TO BE USED ON WHAT EQUIPMENT:_____

EQUIPMENT NUMBER:_____

SPECIFICATION SECTION:_____

CITY PERSONNEL FILL IN:

BIN NUMBER:_____

AIMS NUMBER:_____

LOCATION IN STORES:_____

RECEIVED BY:_____

++ END OF SECTION ++

SECTION 01800

EQUIPMENT SCHEDULE

PART 1 - GENERAL

1.1 SUMMARY

A. Provides equipment as shown and mentioned in the equipment schedule.

1.2 RELATED SECTIONS

A. Section 01300, Submittals.

B. Section 01640, Materials and Equipment.

C. Section 09900, Painting.

D. Section 10400, Equipment Identification Plates.

E. Section 11217, Sample Pumps.

F. Section 11220 Inline Rapid Mixers.

G. Section 11285 Hydraulic Gates.

H. Section 11295 Hydraulic Valves.

I. Section 11311 Submersible Pumps.

J. Section 11314 End Suction Centrifugal Pumps.

K. Section 11320 Self-Cleaning Strainers.

L. Section 11371 Positive Displacement Blowers.

M. Section 11372 Air Compressors.

N. Section 11500 Membrane Equipment System.

O. Section 11715, Chemical Metering Pumps and Appurtenances.

P. Section 13447, Electric Motor Actuators.

Q. Section 15050, Piping Systems.

R. Division 16, Electrical.

S. Section 16225, Electric Motors 250 HP or Less.

T. Division 17, Instrumentation

1.3 SYSTEM DESCRIPTION

A. Equipment identification numbers shall be as shown on the Drawings and as listed in this Section. Valve and gate identification numbers shall be as shown on the schedules and on the Drawings. Identification plates shall be as specified in Section 10400, Equipment Identification Plates, and Section 15050, Piping Systems. The CONTRACTOR shall install new identification plates on all new and existing equipment, valves, and gates which are numbered by the Contract Documents.

B. Individual equipment identification numbers are comprised of nine alpha-numeric characters distinguished by two dashes. The identification numbers appear in the following format: XXX-XXX-XXX.
   1. The first three (or two) characters denote the process to which the equipment pertains. These characters shall be alphabetic, as shown on the Drawings.
   2. The following three characters denote a device number, with each piece of equipment in a particular process having a unique device number. These characters shall be numeric.
   3. The final three (or two) characters denote the process equipment code which the number represents. These characters shall be alphabetic as shown on the Drawings.

1.4 EQUIPMENT SCHEDULE

A. This Equipment Schedule is provided for general information on specific items of equipment.

B. The Equipment Schedule lists new equipment installed as part of this Project. Not all equipment items appear on this table. The Equipment Schedule includes all hydraulic valves three inches or larger. Refer to Drawings for all hydraulic valves two inches or smaller.

C. Tags for hydraulic gates are provided under Section 11285, actuators are provided under Section 13447 and tags for field instruments are provided in Division 17, Instrumentation and Contract Documents.

D. In the event of discrepancies between this Schedule and the Drawings and Specifications, the information on the Drawings and Specifications shall govern. Where the Drawings and Specifications identify the equipment in only one of two or more identical basins (or other process units), the information in this schedule shall be used to identify the equipment in all such identical basins (or other process units).

Equipment Description	Equipment Number	Specification Number	Process Sheet	Status
RAW WATER PUMP STATION				
RAW WATER PUMP STATION WET WELL TURBIDITY ANALYZER	*TBD*	17325	M-1.04	PROPOSED
RAW WATER PUMP STATION WET WELL RADAR LEVEL TRANSMITTER	*TBD*	17125	M-1.04	PROPOSED
RAW WATER PUMP STATION WET WELL FLOAT LEVEL SENSOR	*TBD*	17111	I-1.01	PROPOSED
SUBMERSIBLE PUMP NO. 1	*TBD*	11311	M-1.04	PROPOSED
SUBMERSIBLE PUMP NO. 1 E-STOP	*TBD*	16440	M-1.03	PROPOSED
SUBMERSIBLE PUMP NO. 1 PRESSURE GAUGE	*TBD*	17121	M-1.03	PROPOSED
SUBMERSIBLE PUMP NO. 1 PRESSURE SWITCH	*TBD*	17121	M-1.03	PROPOSED
SUBMERSIBLE PUMP NO. 2	*TBD*	11311	M-1.04	PROPOSED
SUBMERSIBLE PUMP NO. 2 E-STOP	*TBD*	16440	M-1.03	PROPOSED
SUBMERSIBLE PUMP NO. 2 PRESSURE GAUGE	*TBD*	17121	M-1.03	PROPOSED
SUBMERSIBLE PUMP NO. 2 PRESSURE SWITCH	*TBD*	17121	M-1.03	PROPOSED
SUBMERSIBLE PUMP NO. 3	*TBD*	11311	M-1.04	PROPOSED
SUBMERSIBLE PUMP NO. 3 E-STOP	*TBD*	16440	M-1.03	PROPOSED
SUBMERSIBLE PUMP NO. 3 PRESSURE GAUGE	*TBD*	17121	M-1.03	PROPOSED
SUBMERSIBLE PUMP NO. 3 PRESSURE SWITCH	*TBD*	17121	M-1.03	PROPOSED
SUBMERSIBLE PUMP NO. 1 3-INCH COMBINATION AIR/VACUUM VALVE	*TBD*	11295	M-1.03	PROPOSED

Equipment Description	Equipment Number	Specification Number	Process Sheet	Status
SUBMERSIBLE PUMP NO. 2 3-INCH COMBINATION AIR/VACUUM VALVE	*TBD*	11295	M-1.03	PROPOSED
SUBMERSIBLE PUMP NO. 3 3-INCH COMBINATION AIR/VACUUM VALVE	*TBD*	11295	M-1.03	PROPOSED
SUBMERSIBLE PUMP NO. 1 18-INCH SWING CHECK VALVE	*TBD*	11295	M-1.03	PROPOSED
SUBMERSIBLE PUMP NO. 2 18-INCH SWING CHECK VALVE	*TBD*	11295	M-1.03	PROPOSED
SUBMERSIBLE PUMP NO. 3 18-INCH SWING CHECK VALVE	*TBD*	11295	M-1.03	PROPOSED
SUBMERSIBLE PUMP NO. 1 ISOLATION 18-INCH BUTTERFLY VALVE	*TBD*	11295	M-1.03	PROPOSED
SUBMERSIBLE PUMP NO. 2 ISOLATION 18-INCH BUTTERFLY VALVE	*TBD*	11295	M-1.03	PROPOSED
SUBMERSIBLE PUMP NO. 3 ISOLATION 18-INCH BUTTERFLY VALVE	*TBD*	11295	M-1.03	PROPOSED
RAW WATER PUMP STATION COMMON DISCHARGE HEADER ISOLATION 24-INCH BUTTERFLY VALVE	*TBD*	11295	M-1.03	PROPOSED
RAW WATER PUMP STATION COMMON DISCHARGE HEADER ISOLATION 18-INCH BUTTERFLY VALVE NO. 1	*TBD*	11295	M-1.03	PROPOSED
RAW WATER PUMP STATION COMMON DISCHARGE HEADER MAGNETIC FLOW METER	*TBD*	17137	M-1.03	PROPOSED
RAW WATER PUMP STATION COMMON DISCHARGE HEADER ISOLATION 18-INCH BUTTERFLY VALVE NO. 2	*TBD*	11295	M-1.03	PROPOSED
RAW WATER PUMP STATION COMMON DISCHARGE HEADER FLOW SWITCH	*TBD*	17134	M-1.03	PROPOSED
RAW WATER PUMP STATION COMMON DISCHARGE HEADER 4-INCH AIR COMBINATION AIR/VACUUM VALVE	*TBD*	11295	M-1.03	PROPOSED
SUBMERSIBLE PUMP NO. 1 VARIABLE SPEED DRIVE	*TBD*	16485	E-3.21	PROPOSED

Equipment Description	Equipment Number	Specification Number	Process Sheet	Status
SUBMERSIBLE PUMP NO. 2 VARIABLE SPEED DRIVE	*TBD*	16485	E-3.21	PROPOSED
SUBMERSIBLE PUMP NO. 3 VARIABLE SPEED DRIVE	*TBD*	16485	E-3.21	PROPOSED
RAW WATER PUMP STATION LOCAL CONTROL PANEL	*TBD*	16161	E-3.21	PROPOSED
RAW WATER PUMP STATION INFLUENT GATE	*TBD*	11285	M-1.03	PROPOSED
RAW WATER PUMP STATION INFLUENT GATE ACTUATOR	*TBD*	13447	M-1.03	PROPOSED
RAW WATER PUMP STATION INFLUENT GATE DISCONNECT SWITCH	*TBD*	16440	M-1.03	PROPOSED
RAW WATER PUMP STATION INFLUENT GATE PANEL	*TBD*	16161	E-3.21	PROPOSED
SELF-CLEANING STRAINER				
SELF-CLEANING STRAINER NO. 1 ISOLATION 18-INCH BUTTERFLY VALVE NO. 1	*TBD*	11295	M-1.23	PROPOSED
SELF-CLEANING STRAINER NO. 1	*TBD*	11320	M-1.23	PROPOSED
SELF-CLEANING STRAINER NO. 1 ISOLATION 18-INCH BUTTERFLY VALVE NO. 2	*TBD*	11295	M-1.23	PROPOSED
SELF-CLEANING STRAINER NO. 1 PRESSURE GAUGE NO.1	*TBD*	17121	M-1.24	PROPOSED
SELF-CLEANING STRAINER NO. 1 DIFFERENTIAL PRESSURE SWITCH	*TBD*	17121	M-1.24	PROPOSED
SELF-CLEANING STRAINER NO. 1 PRESSURE GAUGE NO.2	*TBD*	17121	M-1.24	PROPOSED
SELF-CLEANING STRAINER NO. 1 BACKWASH ASSIST PUMP SUCTION PRESSURE GAUGE	*TBD*	17121	M-1.23	PROPOSED
SELF-CLEANING STRAINER NO. 1 BACKWASH ASSIST PUMP DISCHARGE PRESSURE GAUGE	*TBD*	17121	M-1.23	PROPOSED

Equipment Description	Equipment Number	Specification Number	Process Sheet	Status
SELF-CLEANING STRAINER NO. 1 BACKWASH PUMP	*TBD*	11320	M-1.23	PROPOSED
SELF- CLEANING STRAINER NO. 1 MOTOR CONTROL PANEL	*TBD*	16474	M-1.23	PROPOSED
SELF- CLEANING STRAINER NO. 1 DISCONNECT SWITCH	*TBD*	16440	M-1.23	PROPOSED
SELF-CLEANING STRAINER NO. 2 ISOLATION 18-INCH BUTTERFLY VALVE NO. 1	*TBD*	11295	M-1.23	PROPOSED
SELF-CLEANING STRAINER NO. 2	*TBD*	11320	M-1.23	PROPOSED
SELF-CLEANING STRAINER NO. 2 ISOLATION 18-INCH BUTTERFLY VALVE NO. 2	*TBD*	11295	M-1.23	PROPOSED
SELF-CLEANING STRAINER NO. 2 PRESSURE GAUGE NO.1	*TBD*	17121	M-1.24	PROPOSED
SELF-CLEANING STRAINER NO. 2 DIFFERENTIAL PRESSURE SWITCH	*TBD*	17121	M-1.24	PROPOSED
SELF-CLEANING STRAINER NO. 2 PRESSURE GAUGE NO.2	*TBD*	17121	M-1.24	PROPOSED
SELF-CLEANING STRAINER NO. 2 BACKWASH ASSIST PUMP SUCTION PRESSURE GAUGE	*TBD*	17121	M-1.23	PROPOSED
SELF-CLEANING STRAINER NO. 2 BACKWASH ASSIST PUMP DISCHARGE PRESSURE GAUGE	*TBD*	11295	M-1.23	PROPOSED
SELF-CLEANING STRAINER NO. 2 BACKWASH PUMP	*TBD*	11320	M-1.23	PROPOSED
SELF- CLEANING STRAINER NO. 2 MOTOR CONTROL PANEL	*TBD*	16474	M-1.23	PROPOSED
SELF- CLEANING STRAINER NO. 2 DISCONNECT SWITCH	*TBD*	16440	M-1.23	PROPOSED
SELF-CLEANING STRAINER NO. 3 ISOLATION 18-INCH BUTTERFLY VALVE NO. 1	*TBD*	11295	M-1.23	PROPOSED
SELF-CLEANING STRAINER NO. 3	*TBD*	11320	M-1.23	PROPOSED

Equipment Description	Equipment Number	Specification Number	Process Sheet	Status
SELF-CLEANING STRAINER NO. 3 ISOLATION 18-INCH BUTTERFLY VALVE NO. 2	*TBD*	11295	M-1.23	PROPOSED
SELF-CLEANING STRAINER NO. 3 PRESSURE GAUGE NO.1	*TBD*	17121	M-1.24	PROPOSED
SELF-CLEANING STRAINER NO. 3 DIFFERENTIAL PRESSURE SWITCH	*TBD*	17121	M-1.24	PROPOSED
SELF-CLEANING STRAINER NO. 3 PRESSURE GAUGE NO.2	*TBD*	17121	M-1.24	PROPOSED
SELF-CLEANING STRAINER NO. 3 BACKWASH ASSIST PUMP SUCTION PRESSURE GAUGE	*TBD*	17121	M-1.23	PROPOSED
SELF-CLEANING STRAINER NO. 3 BACKWASH ASSIST PUMP DISCHARGE PRESSURE GAUGE	*TBD*	17121	M-1.23	PROPOSED
SELF-CLEANING STRAINER NO. 3 BACKWASH PUMP	*TBD*	11320	M-1.23	PROPOSED
SELF- CLEANING STRAINER NO. 3 MOTOR CONTROL PANEL	*TBD*	16474	M-1.23	PROPOSED
SELF- CLEANING STRAINER NO. 3 DISCONNECT SWITCH	*TBD*	16440	M-1.23	PROPOSED
ACH INJECTION QUILL NO. 1	*TBD*	11295	M-1.23	PROPOSED
ACH INJECTION QUILL NO. 2	*TBD*	11295	M-1.23	PROPOSED
MEBRANE FILTERS				
MEMBRANE FILTRATION SYSTEM INLET CHANNEL LEVEL SWITCH	*TBD*	17122	M-1.43	PROPOSED
MEMBRANE FILTRATION SYSTEM BASIN NO. 1 INLET VALVE	*TBD*	11295	M-1-45	PROPOSED
MEMBRANE FILTRATION SYSTEM BASIN NO. 1 INLET VALVE PNEUMATIC ACTUATOR	*TBD*	13445	M-1-45	PROPOSED
MEMBRANE FILTRATION SYSTEM BASIN NO. 1 DRAIN VALVE	*TBD*	11295	M-1-45	PROPOSED

Equipment Description	Equipment Number	Specification Number	Process Sheet	Status
MEMBRANE FILTRATION SYSTEM BASIN NO. 1 DRAIN VALVE PNEUMATIC ACTUATOR	*TBD*	13445	M-1.43	PROPOSED
MEMBRANE FILTRATION SYSTEM BASIN NO. 1 AIR SUPPLY VALVE	*TBD*	11295	M-1-45	PROPOSED
MEMBRANE FILTRATION SYSTEM BASIN NO. 1 AIR SUPPLY VALVE PNEUMATIC ACTUATOR	*TBD*	13445	M-1.43	PROPOSED
MEMBRANE FILTRATION SYSTEM BASIN NO. 1 BACKPULSE SUPPLY VALVE	*TBD*	11295	M-1-45	PROPOSED
MEMBRANE FILTRATION SYSTEM BASIN NO. 1 CIP VALVE	*TBD*	11295	M-1-45	PROPOSED
MEMBRANE FILTRATION SYSTEM BASIN NO. 1 CIP DRAIN VALVE PNEUMATIC ACTUATOR	*TBD*	13445	M-1.43	PROPOSED
MEMBRANE FILTRATION SYSTEM BASIN NO. 1 CIP DRAIN VALVE	*TBD*	11295	M-1-45	PROPOSED
MEMBRANE FILTRATION SYSTEM BASIN NO. 1 LEVEL SENSOR	*TBD*	17125	M-1.43	PROPOSED
MEMBRANE FILTRATION SYSTEM BASIN NO. 1 PRESSURE INDICATOR TRANSMITTER	*TBD*	17120	M-1.43	PROPOSED
MEMBRANE FILTRATION SYSTEM BASIN NO. 1 PERMEATE PUMP	*TBD*	11314	M-1.43	PROPOSED
MEMBRANE FILTRATION SYSTEM BASIN NO. 1 PERMEATE PUMP DISCONNECT SWITCH	*TBD*	16440	M-1.46	PROPOSED
MEMBRANE FILTRATION SYSTEM BASIN NO. 1 PERMEATE PUMP SUCTION ISOLATION 12-INCH BUTTERFLY VALVE NO. 1	*TBD*	11295	M-1-45	PROPOSED
MEMBRANE FILTRATION SYSTEM BASIN NO. 1 PERMEATE PUMP SUCTION ISOLATION 12-INCH BUTTERFLY VALVE NO. 1 PNEUMATIC ACTUTOR	*TBD*	13445	M-1.43	PROPOSED

Equipment Description	Equipment Number	Specification Number	Process Sheet	Status
MEMBRANE FILTRATION SYSTEM BASIN NO. 1 PERMEATE PUMP SUCTION ISOLATION 12-INCH BUTTERFLY VALVE NO. 2	*TBD*	11295	M-1-45	PROPOSED
MEMBRANE FILTRATION SYSTEM BASIN NO. 1 PERMEATE PUMP SUCTION ISOLATION 12-INCH BUTTERFLY VALVE NO. 2 PNEUMATIC ACTUATOR	*TBD*	13445	M-1.43	PROPOSED
MEMBRANE FILTRATION SYSTEM BASIN NO. 1 PERMEATE PUMP DISCHARGE ISOLATION 12-INCH BUTTERFLY VALVE	*TBD*	11295	M-1-45	PROPOSED
MEMBRANE FILTRATION SYSTEM BASIN NO. 1 PERMEATE PUMP DISCHARGE ISOLATION 12-INCH BUTTERFLY VALVE PNEUMATIC ACTUATOR	*TBD*	13445	M-1.43	PROPOSED
MEMBRANE FILTRATION SYSTEM BASIN NO. 1 PERMEATE PUMP 12-INCH CHECK VALVE	*TBD*	11295	M-1-45	PROPOSED
MEMBRANE FILTRATION SYSTEM BASIN NO. 1 PERMEATE PUMP 12-INCH CHECK VALVE PNEUMATIC ACTUATOR	*TBD*	13445	M-1.43	PROPOSED
MEMBRANE FILTRATION SYSTEM BASIN NO. 1 PERMEATE PUMP MAGNETIC FLOW METER	*TBD*	17137	M-1-45	PROPOSED
MEMBRANE FILTRATION SYSTEM BASIN NO. 1 PERMEATE PUMP SUCTION PRESSURE GAUGE	*TBD*	17121	M-1-45	PROPOSED
MEMBRANE FILTRATION SYSTEM BASIN NO. 1 PERMEATE PUMP DISCHARGE PRESSURE SWITCH	*TBD*	17121	M-1-45	PROPOSED
MEMBRANE FILTRATION SYSTEM BASIN NO. 1 PERMEATE PUMP SUCTION ISOLATION 14-INCH BUTTERFLY VALVE	*TBD*	11295	M-1.43	PROPOSED
MEMBRANE FILTRATION SYSTEM BASIN NO. 1 PERMEATE PUMP SUCTION ISOLATION 14-INCH BUTTERFLY VALVE PNEUMATIC ACTUATOR	*TBD*	13445	M-1.43	PROPOSED
MEMBRANE FILTRATION SYSTEM BASIN NO. 1 PERMEATE PUMP TURBITITY ANALYZER	*TBD*	17325	M-1.43	PROPOSED

Equipment Description	Equipment Number	Specification Number	Process Sheet	Status
MEMBRANE FILTRATION SYSTEM BASIN NO. 1 PERMEATE PUMP VFD	*TBD*	16485	M-1.43	PROPOSED
MEMBRANE FILTRATION SYSTEM BASIN NO. 2 INLET VALVE	*TBD*	11295	M-1-45	PROPOSED
MEMBRANE FILTRATION SYSTEM BASIN NO. 2 INLET VALVE PNEUMATIC ACTUATOR	*TBD*	13445	M-1-45	PROPOSED
MEMBRANE FILTRATION SYSTEM BASIN NO. 2 DRAIN VALVE	*TBD*	11295	M-1-45	PROPOSED
MEMBRANE FILTRATION SYSTEM BASIN NO. 2 DRAIN VALVE PNEUMATIC ACTUATOR	*TBD*	13445	M-1.43	PROPOSED
MEMBRANE FILTRATION SYSTEM BASIN NO. 2 AIR SUPPLY VALVE	*TBD*	11295	M-1-45	PROPOSED
MEMBRANE FILTRATION SYSTEM BASIN NO. 2 AIR SUPPLY VALVE PNEUMATIC ACTUATOR	*TBD*	13445	M-1.43	PROPOSED
MEMBRANE FILTRATION SYSTEM BASIN NO. 2 BACKPULSE SUPPLY VALVE	*TBD*	11295	M-1-45	PROPOSED
MEMBRANE FILTRATION SYSTEM BASIN NO. 2 CIP VALVE	*TBD*	11295	M-1-45	PROPOSED
MEMBRANE FILTRATION SYSTEM BASIN NO. 2 CIP DRAIN VALVE PNEUMATIC ACTUATOR	*TBD*	13445	M-1.43	PROPOSED
MEMBRANE FILTRATION SYSTEM BASIN NO. 2 LEVEL SENSOR	*TBD*	17125	M-1.43	PROPOSED
MEMBRANE FILTRATION SYSTEM BASIN NO. 2 PRESSURE INDICATOR TRANSMITTER	*TBD*	17120	M-1.43	PROPOSED
MEMBRANE FILTRATION SYSTEM BASIN NO. 2 PERMEATE PUMP	*TBD*	11314	M-1.43	PROPOSED
MEMBRANE FILTRATION SYSTEM BASIN NO. 2 PERMEATE PUMP DISCONNECT SWITCH	*TBD*	16440	M-1.46	PROPOSED
MEMBRANE FILTRATION SYSTEM BASIN NO. 2 PERMEATE	*TBD*	11295	M-1-45	PROPOSED

Equipment Description	Equipment Number	Specification Number	Process Sheet	Status
PUMP SUCTION ISOLATION 12-INCH BUTTERFLY VALVE NO. 1				
MEMBRANE FILTRATION SYSTEM BASIN NO. 2 PERMEATE PUMP SUCTION ISOLATION 12-INCH BUTTERFLY VALVE NO. 2 PNEUMATIC ACTUTOR	*TBD*	13445	M-1.43	PROPOSED
MEMBRANE FILTRATION SYSTEM BASIN NO. 2 PERMEATE PUMP SUCTION ISOLATION 12-INCH BUTTERFLY VALVE NO. 2	*TBD*	11295	M-1-45	PROPOSED
MEMBRANE FILTRATION SYSTEM BASIN NO. 2 PERMEATE PUMP SUCTION ISOLATION 12-INCH BUTTERFLY VALVE NO. 2 PNEUMATIC ACTUATOR	*TBD*	13445	M-1.43	PROPOSED
MEMBRANE FILTRATION SYSTEM BASIN NO. 2 PERMEATE PUMP DISCHARGE ISOLATION 12-INCH BUTTERFLY VALVE	*TBD*	11295	M-1-45	PROPOSED
MEMBRANE FILTRATION SYSTEM BASIN NO. 2 PERMEATE PUMP DISCHARGE ISOLATION 12-INCH BUTTERFLY VALVE PNEUMATIC ACTUATOR	*TBD*	13445	M-1.43	PROPOSED
MEMBRANE FILTRATION SYSTEM BASIN NO. 2 PERMEATE PUMP 12-INCH CHECK VALVE	*TBD*	11295	M-1-45	PROPOSED
MEMBRANE FILTRATION SYSTEM BASIN NO. 2 PERMEATE PUMP MAGNETIC FLOW METER	*TBD*	17137	M-1-45	PROPOSED
MEMBRANE FILTRATION SYSTEM BASIN NO. 2 PERMEATE PUMP SUCTION PRESSURE GAUGE	*TBD*	17121	M-1-45	PROPOSED
MEMBRANE FILTRATION SYSTEM BASIN NO. 2 PERMEATE PUMP DISCHARGE PRESSURE SWITCH	*TBD*	17121	M-1-45	PROPOSED
MEMBRANE FILTRATION SYSTEM BASIN NO. 2 PERMEATE PUMP SUCTION ISOLATION 14-INCH BUTTERFLY VALVE	*TBD*	11295	M-1.43	PROPOSED
MEMBRANE FILTRATION SYSTEM BASIN NO. 2 PERMEATE PUMP SUCTION ISOLATION 14-INCH BUTTERFLY VALVE	*TBD*	13445	M-1.43	PROPOSED

Equipment Description	Equipment Number	Specification Number	Process Sheet	Status
PNEUMATIC ACTUATOR				
MEMBRANE FILTRATION SYSTEM BASIN NO. 2 PERMEATE PUMP TURBITITY ANALYZER	*TBD*	17325	M-1.43	PROPOSED
MEMBRANE FILTRATION SYSTEM BASIN NO. 2 PERMEATE PUMP VFD	*TBD*	16485	M-1.43	PROPOSED
MEMBRANE FILTRATION SYSTEM BASIN NO. 3 INLET VALVE	*TBD*	11295	M-1-45	PROPOSED
MEMBRANE FILTRATION SYSTEM BASIN NO. 3 INLET VALVE PNEUMATIC ACTUATOR	*TBD*	13445	M-1-45	PROPOSED
MEMBRANE FILTRATION SYSTEM BASIN NO. 3 DRAIN VALVE	*TBD*	11295	M-1-45	PROPOSED
MEMBRANE FILTRATION SYSTEM BASIN NO. 3 DRAIN VALVE PNEUMATIC ACTUATOR	*TBD*	13445	M-1-45	PROPOSED
MEMBRANE FILTRATION SYSTEM BASIN NO. 3 AIR SUPPLY VALVE	*TBD*	11295	M-1-45	PROPOSED
MEMBRANE FILTRATION SYSTEM BASIN NO. 3 AIR SUPPLY VALVE PNEUMATIC ACTUATOR	*TBD*	13445	M-1.43	PROPOSED
MEMBRANE FILTRATION SYSTEM BASIN NO. 3 BACKPULSE SUPPLY VALVE	*TBD*	11295	M-1-45	PROPOSED
MEMBRANE FILTRATION SYSTEM BASIN NO. 3 CIP VALVE	*TBD*	11295	M-1-45	PROPOSED
MEMBRANE FILTRATION SYSTEM BASIN NO. 3 CIP DRAIN VALVE PNEUMATIC ACTUATOR	*TBD*	13445	M-1.43	PROPOSED
MEMBRANE FILTRATION SYSTEM BASIN NO. 3 LEVEL SENSOR	*TBD*	17125	M-1.43	PROPOSED
MEMBRANE FILTRATION SYSTEM BASIN NO. 3 PRESSURE INDICATOR TRANSMITTER	*TBD*	17120	M-1.43	PROPOSED
MEMBRANE FILTRATION SYSTEM BASIN NO. 3 PERMEATE PUMP	*TBD*	11314	M-1.43	PROPOSED

Equipment Description	Equipment Number	Specification Number	Process Sheet	Status
MEMBRANE FILTRATION SYSTEM BASIN NO. 3 PERMEATE PUMP DISCONNECT SWITCH	*TBD*	16440	M-1.46	PROPOSED
MEMBRANE FILTRATION SYSTEM BASIN NO. 3 PERMEATE PUMP SUCTION ISOLATION 12-INCH BUTTERFLY VALVE NO. 1	*TBD*	11295	M-1-45	PROPOSED
MEMBRANE FILTRATION SYSTEM BASIN NO. 3 PERMEATE PUMP SUCTION ISOLATION 12-INCH BUTTERFLY VALVE NO. 1 PNEUMATIC ACTUATOR	*TBD*	13445	M-1.43	PROPOSED
MEMBRANE FILTRATION SYSTEM BASIN NO. 3 PERMEATE PUMP SUCTION ISOLATION 12-INCH BUTTERFLY VALVE NO. 2	*TBD*	11295	M-1-45	PROPOSED
MEMBRANE FILTRATION SYSTEM BASIN NO. 3 PERMEATE PUMP SUCTION ISOLATION 12-INCH BUTTERFLY VALVE NO. 2 PNEUMATIC ACTUATOR	*TBD*	13445	M-1.43	PROPOSED
MEMBRANE FILTRATION SYSTEM BASIN NO. 3 PERMEATE PUMP DISCHARGE ISOLATION 12-INCH BUTTERFLY VALVE	*TBD*	11295	M-1-45	PROPOSED
MEMBRANE FILTRATION SYSTEM BASIN NO. 3 PERMEATE PUMP DISCHARGE ISOLATION 12-INCH BUTTERFLY VALVE PNEUMATIC ACTUATOR	*TBD*	13445	M-1.43	PROPOSED
MEMBRANE FILTRATION SYSTEM BASIN NO. 3 PERMEATE PUMP 12-INCH CHECK VALVE	*TBD*	11295	M-1-45	PROPOSED
MEMBRANE FILTRATION SYSTEM BASIN NO. 3 PERMEATE PUMP MAGNETIC FLOW METER	*TBD*	17137	M-1-45	PROPOSED
MEMBRANE FILTRATION SYSTEM BASIN NO. 3 PERMEATE PUMP SUCTION PRESSURE GAUGE	*TBD*	17121	M-1-45	PROPOSED
MEMBRANE FILTRATION SYSTEM BASIN NO. 3 PERMEATE PUMP DISCHARGE PRESSURE SWITCH	*TBD*	17121	M-1-45	PROPOSED
MEMBRANE FILTRATION SYSTEM BASIN NO.3 PERMEATE PUMP SUCTION ISOLATION 14-INCH BUTTERFLY VALVE	*TBD*	11295	M-1.43	PROPOSED

Equipment Description	Equipment Number	Specification Number	Process Sheet	Status
MEMBRANE FILTRATION SYSTEM BASIN NO. 3 PERMEATE PUMP SUCTION ISOLATION 14-INCH BUTTERFLY VALVE PNEUMATIC ACTUATOR	*TBD*	13445	M-1.43	PROPOSED
MEMBRANE FILTRATION SYSTEM BASIN NO. 3 PERMEATE PUMP TURBITITY ANALYZER	*TBD*	17325	M-1.43	PROPOSED
MEMBRANE FILTRATION SYSTEM BASIN NO. 3 PERMEATE PUMP VARIBALE FREQUANCY DRIVE	*TBD*	16485	M-1.43	PROPOSED
MEMBRANE FILTRATION SYSTEM BASIN NO. 4 INLET VALVE	*TBD*	11295	M-1-45	PROPOSED
MEMBRANE FILTRATION SYSTEM BASIN NO. 4 INLET VALVE PNEUMATIC ACTUATOR	*TBD*	13445	M-1-45	PROPOSED
MEMBRANE FILTRATION SYSTEM BASIN NO. 4 DRAIN VALVE	*TBD*	11295	M-1-45	PROPOSED
MEMBRANE FILTRATION SYSTEM BASIN NO. 4 DRAIN VALVE PNEUMATIC ACTUATOR	*TBD*	13445	M-1-45	PROPOSED
MEMBRANE FILTRATION SYSTEM BASIN NO. 4 AIR SUPPLY VALVE	*TBD*	11295	M-1-45	PROPOSED
MEMBRANE FILTRATION SYSTEM BASIN NO. 4 AIR SUPPLY VALVE PNEUMATIC ACTUATOR	*TBD*	13445	M-1.43	PROPOSED
MEMBRANE FILTRATION SYSTEM BASIN NO. 4 BACKPULSE SUPPLY VALVE	*TBD*	11295	M-1-45	PROPOSED
MEMBRANE FILTRATION SYSTEM BASIN NO. 4 CIP VALVE	*TBD*	11295	M-1-45	PROPOSED
MEMBRANE FILTRATION SYSTEM BASIN NO. 4 CIP DRAIN VALVE PNEUMATIC ACTUATOR	*TBD*	13445	M-1.43	PROPOSED
MEMBRANE FILTRATION SYSTEM BASIN NO. 4 LEVEL SENSOR	*TBD*	17125	M-1.43	PROPOSED
MEMBRANE FILTRATION SYSTEM BASIN NO. 4 PRESSURE INDICATOR TRANSMITTER	*TBD*	17120	M-1.43	PROPOSED

Equipment Description	Equipment Number	Specification Number	Process Sheet	Status
MEMBRANE FILTRATION SYSTEM BASIN NO. 4 PERMEATE PUMP	*TBD*	11314	M-1.43	PROPOSED
MEMBRANE FILTRATION SYSTEM BASIN NO. 4 PERMEATE PUMP DISCONNECT SWITCH	*TBD*	16440	M-1.46	PROPOSED
MEMBRANE FILTRATION SYSTEM BASIN NO. 4 PERMEATE PUMP SUCTION ISOLATION 12-INCH BUTTERFLY VALVE NO. 1	*TBD*	11295	M-1-45	PROPOSED
MEMBRANE FILTRATION SYSTEM BASIN NO. 4 PERMEATE PUMP SUCTION ISOLATION 12-INCH BUTTERFLY VALVE NO. 1 PNEUMATIC ACTUATOR	*TBD*	13445	M-1.43	PROPOSED
MEMBRANE FILTRATION SYSTEM BASIN NO. 4 PERMEATE PUMP SUCTION ISOLATION 12-INCH BUTTERFLY VALVE NO. 2	*TBD*	11295	M-1-45	PROPOSED
MEMBRANE FILTRATION SYSTEM BASIN NO. 4 PERMEATE PUMP SUCTION ISOLATION 12-INCH BUTTERFLY VALVE NO. 2 PNEUMATIC ACTUATOR	*TBD*	13445	M-1.43	PROPOSED
MEMBRANE FILTRATION SYSTEM BASIN NO. 4 PERMEATE PUMP DISCHARGE ISOLATION 12-INCH BUTTERFLY VALVE	*TBD*	11295	M-1-45	PROPOSED
MEMBRANE FILTRATION SYSTEM BASIN NO. 4 PERMEATE PUMP DISCHARGE ISOLATION 12-INCH BUTTERFLY VALVE PNEUMATIC ACTUATOR	*TBD*	13445	M-1.43	PROPOSED
MEMBRANE FILTRATION SYSTEM BASIN NO. 4 PERMEATE PUMP 12-INCH CHECK VALVE	*TBD*	11295	M-1-45	PROPOSED
MEMBRANE FILTRATION SYSTEM BASIN NO. 4 PERMEATE PUMP MAGNETIC FLOW METER	*TBD*	17137	M-1-45	PROPOSED
MEMBRANE FILTRATION SYSTEM BASIN NO. 4 PERMEATE PUMP SUCTION PRESSURE GAUGE	*TBD*	17121	M-1-45	PROPOSED
MEMBRANE FILTRATION SYSTEM BASIN NO. 4 PERMEATE PUMP DISCHARGE PRESSURE SWITCH	*TBD*	17121	M-1-45	PROPOSED

Equipment Description	Equipment Number	Specification Number	Process Sheet	Status
MEMBRANE FILTRATION SYSTEM BASIN NO.4 PERMEATE PUMP SUCTION ISOLATION 14-INCH BUTTERFLY VALVE	*TBD*	11295	M-1.43	PROPOSED
MEMBRANE FILTRATION SYSTEM BASIN NO. 4 PERMEATE PUMP SUCTION ISOLATION 14-INCH BUTTERFLY VALVE PNEUMATIC ACTUATOR	*TBD*	13445	M-1.43	PROPOSED
MEMBRANE FILTRATION SYSTEM BASIN NO. 4 PERMEATE PUMP TURBITITY ANALYZER	*TBD*	17325	M-1.43	PROPOSED
MEMBRANE FILTRATION SYSTEM BASIN NO. 4 PERMEATE PUMP VFD	*TBD*	16485	M-1.43	PROPOSED
MEMBRANE FILTRATION SYSTEM CIP PUMP NO. 1	*TBD*	11314	M-1-46	PROPOSED
MEMBRANE FILTRATION SYSTEM CIP PUMP NO. 1 DISCONNECT SWITCH	*TBD*	16440	M-1-46	PROPOSED
MEMBRANE FILTRATION SYSTEM BASIN NO. 1 CIP PUMP SUCTION ISOLATION 12-INCH BUTTERFLY VALVE	*TBD*	11295	M-1-46	PROPOSED
MEMBRANE FILTRATION SYSTEM BASIN NO. 1 CIP PUMP DISCHARGE ISOLATION 12-INCH BUTTERFLY VALVE	*TBD*	11295	M-1-46	PROPOSED
MEMBRANE FILTRATION SYSTEM BASIN NO. 1 CIP PUMP 12-INCH CHECK VALVE	*TBD*	11295	M-1-46	PROPOSED
MEMBRANE FILTRATION SYSTEM CIP PUMP NO. 1 DISCHARGE PRESSURE GAUGE	*TBD*	17121	M-1-46	PROPOSED
MEMBRANE FILTRATION SYSTEM CIP PUMP NO. 2	*TBD*	11314	M-1-46	PROPOSED
MEMBRANE FILTRATION SYSTEM CIP PUMP NO. 2 DISCONNECT SWITCH	*TBD*	16440	M-1-46	PROPOSED
MEMBRANE FILTRATION SYSTEM BASIN NO. 2 CIP PUMP SUCTION ISOLATION 12-INCH BUTTERFLY VALVE	*TBD*	11295	M-1-46	PROPOSED
MEMBRANE FILTRATION SYSTEM BASIN NO. 2 CIP PUMP	*TBD*	11295	M-1-46	PROPOSED

Equipment Description	Equipment Number	Specification Number	Process Sheet	Status
DISCHARGE ISOLATION 12-INCH BUTTERFLY VALVE				
MEMBRANE FILTRATION SYSTEM BASIN NO. 1 CIP PUMP 12-INCH CHECK VALVE	*TBD*	11295	M-1-46	PROPOSED
MEMBRANE FILTRATION SYSTEM CIP PUMP NO. 2 DISCHARGE PRESSURE GAUGE	*TBD*	17121	M-1-46	PROPOSED
MEMBRANE FILTRATION SYSTEM COMMON CIP DISCHARGE HEADER MAGNETIC FLOW METER	*TBD*	17137	M-1.43	PROPOSED
MEMBRANE FILTRATION SYSTEM SODIUM HYPOCHLORITE INJECTION QUILL	*TBD*	11295	M-1.45	PROPOSED
MEMBRANE FILTRATION SYSTEM CITRIC ACID INJECTION QUILL	*TBD*	11295	M-1.45	PROPOSED
MEMBRANE FILTRATION SYSTEM SULFURIC ACID INJECTION QUILL	*TBD*	11295	M-1.45	PROPOSED
MEMBRANE FILTRATION SYSTEM SODIUM HYDROXIDE INJECTION QUILL	*TBD*	11295	M-1.45	PROPOSED
MEMBRANE FILTRATION SYSTEM SODIUM BISULFITE INJECTION QUILL	*TBD*	11295	M-1.45	PROPOSED
MEMBRANE FILTRATION SYSTEM COMMON PERMEATE HEADER 4-INCH COMBINATION AIR/VACUUM VALVE NO. 1	*TBD*	11295	M-1.43	PROPOSED
MEMBRANE FILTRATION SYSTEM COMMON PERMEATE HEADER ISOLATION 18-INCH BUTTERFLY VALVE NO. 1	*TBD*	11295	M-1.43	PROPOSED
MEMBRANE FILTRATION SYSTEM COMMON PERMEATE HEADER ISOLATION 18-INCH BUTTERFLY VALVE NO. 1 PNEUMATIC ACTUATOR	*TBD*	13445	M-1.43	PROPOSED
MEMBRANE FILTRATION SYSTEM COMMON PERMEATE HEADER ISOLATION 18-INCH BUTTERFLY VALVE NO. 2	*TBD*	11295	M-1.43	PROPOSED

Equipment Description	Equipment Number	Specification Number	Process Sheet	Status
MEMBRANE FILTRATION SYSTEM COMMON PERMEATE HEADER ISOLATION 18-INCH BUTTERFLY VALVE NO. 1 PNEUMATIC ACTUATOR	*TBD*	13445	M-1.43	PROPOSED
MEMBRANE FILTRATION SYSTEM COMMON PERMEATE HEADER ISOLATION 24-INCH BUTTERFLY VALVE	*TBD*	11295	M-1.43	PROPOSED
MEMBRANE FILTRATION SYSTEM COMMON PERMEATE HEADER ISOLATION 24-INCH BUTTERFLY VALVE PNEUMATIC ACTUATOR	*TBD*	13445	M-1.43	PROPOSED
MEMBRANE FILTRATION SYSTEM COMMON PERMEATE HEADER MAGNETIC FLOW METER	*TBD*	17137	M-1.43	PROPOSED
MEMBRANE FILTRATION SYSTEM COMMON PERMEATE HEADER 4-INCH COMBINATION AIR/VACUUM VALVE NO. 2	*TBD*	11295	M-1.43	PROPOSED
MEMBRANE FILTRATION SYSTEM CIP TANK LEVEL SENSOR	*TBD*	17125	M-1.43	PROPOSED
MEMBRANE FILTRATION SYSTEM CIP NEAUTRALIZATION LOOP PH ANALYZER	*TBD*	17420	M-1.45	PROPOSED
MEMBRANE FILTRATION SYSTEM CIP NEAUTRALIZATION LOOP CHLORINE ANALYZER	*TBD*	17421	M-1.45	PROPOSED
MEMBRANE FILTRATION SYSTEM BACKPULSE TANK LEVEL SENSOR	*TBD*	17125	M-1.43	PROPOSED
MEMBRANE FILTRATION SYSTEM BACKPULSE TANK LEVEL SENSOR BALL VALVE	*TBD*	11295	M-1.43	PROPOSED
MEMBRANE FILTRATION SYSTEM BACKPULSE TANK DRAIN 4-INCH BALL VALVE	*TBD*	11295	M-1.46	PROPOSED
MEMBRANE FILTRATION SYSTEM BACKPULSE TANK PERMEATE BUTTERFLY VALVE	*TBD*	11295	M-1.43	PROPOSED
NUTRALIZATION LOOP TO SEWER BUTTERFLY VALVE	*TBD*	11295	M-1.43	PROPOSED

Equipment Description	Equipment Number	Specification Number	Process Sheet	Status
NUTRALIZATION LOOP TO SEWER BUTTERFLY VALVE PNEUMATIC ACTUATOR	*TBD*	13445	M-1.43	PROPOSED
NUTRALIZATION LOOP TO SEWER CHECK VALVE	*TBD*	11295	M-1.43	PROPOSED
NUTRALIZATION LOOP TO CIP NUTRALIZATION TANK BUTTERFLY VALVE	*TBD*	11295	M-1.43	PROPOSED
NUTRALIZATION LOOP TO CIP NUTRALIZATION TANK BUTTERFLY VALVE PNEUMATIC ACTUATOR	*TBD*	13445	M-1.43	PROPOSED
CIP PUMP DISCHARGE TO MEMBRANE TRAIN BUTTERFLY VALVE	*TBD*	11295	M-1.43	PROPOSED
CIP PUMP DISCHARGE TO MEMBRANE TRAIN BUTTERFLY VALVE PNEUMATIC ACTUATOR	*TBD*	13445	M-1.43	PROPOSED
MEMBRANE FILTRATION SYSTEM BACKPULSE TANK PERMEATE BUTTERFLY VALVE PNEUMATIC ACTUATOR	*TBD*	13445	M-1.43	PROPOSED
MEMBRANE FILTRATION SYSTEM EYEWASH/SHOWER	*TBD*	15430	M-1.43	PROPOSED
MEMBRANE FILTRATION SYSTEM EYEWASH/SHOWER FLOW SWITCH	*TBD*	17134	M-1.43	PROPOSED
INLINE RAPID MIXER	*TBD*	11220	M-1.43	PROPOSED
INLINE RAPID MIXER DISCONNECT SWITCH	*TBD*	16440	M-1.43	PROPOSED
INLINE RAPID MIXER CONTROL PANEL	*TBD*	16161	M-1.43	PROPOSED
INLINE RAPID MIXER ISOLATION 24-INCH BUTTERFLY VALVE NO. 1	*TBD*	11295	M-1.46	PROPOSED
INLINE RAPID MIXER ISOLATION 24-INCH BUTTERFLY VALVE NO. 2	*TBD*	11295	M-1.46	PROPOSED
INLINE RAPID MIXER ISOLATION 24-INCH BUTTERFLY VALVE NO. 3	*TBD*	11295	M-1.43	PROPOSED

Equipment Description	Equipment Number	Specification Number	Process Sheet	Status
SODIUM HYPOCHLORITE DISINFECTION INJECTION QUILL	*TBD*	11295	M-1.45	PROPOSED
CHLORINE CONTACT BASIN SAMPLE PUMP NO. 3	*TBD*	11217	M-1.61	PROPOSED
CHLORINE CONTACT BASIN SAMPLE PUMP NO. 3 CONTROL PANEL	*TBD*	16161	M-1.61	PROPOSED
CHLORINE CONTACT BASIN SAMPLER	*TBD*	17421	M-1.61	PROPOSED
BLOWER BUILDING				
POSTIVE DISPLACEMENT BLOWER NO. 1	*TBD*	11371	M-1.82	PROPOSED
POSTIVE DISPLACEMENT BLOWER NO. 1 DISCONNECT SWITCH	*TBD*	16440	M-1.82	PROPOSED
POSTIVE DISPLACEMENT BLOWER NO. 1 LOCAL CONTROL PANEL	*TBD*	16161	M-1.82	PROPOSED
POSTIVE DISPLACEMENT BLOWER NO. 1 VARIABLE SPEED DRIVE	*TBD*	16485	M-1.82	PROPOSED
POSTIVE DISPLACEMENT BLOWER NO. 1 ISOLATION 10-INCH BUTTERFLY VALVE	*TBD*	11295	M-1.84	PROPOSED
POSTIVE DISPLACEMENT BLOWER NO. 2	*TBD*	11371	M-1.82	PROPOSED
POSTIVE DISPLACEMENT BLOWER NO. 2 DISCONNECT SWITCH	*TBD*	16440	M-1.82	PROPOSED
POSTIVE DISPLACEMENT BLOWER NO. 2 LOCAL CONTROL PANEL	*TBD*	16161	M-1.82	PROPOSED
POSTIVE DISPLACEMENT BLOWER NO. 2 VARIABLE SPEED DRIVE	*TBD*	16485	M-1.82	PROPOSED
POSTIVE DISPLACEMENT BLOWER NO. 2 ISOLATION 10-INCH BUTTERFLY VALVE	*TBD*	11295	M-1.84	PROPOSED

Equipment Description	Equipment Number	Specification Number	Process Sheet	Status
MEMBRANE FILTRATION SYSTEM AIR SUPPLY PRESSURE INDICATOR TRANSMITTER NO.1	*TBD*	17120	M-1.82	PROPOSED
MEMBRANE FILTRATION SYSTEM AIR SUPPLY FLOW SWITCH	*TBD*	17134	M-1.82	PROPOSED
MEMBRANE FILTRATION SYSTEM AIR SUPPLY THERMAL MASS FLOW METER	*TBD*	17138	M-1.82	PROPOSED
AIR COMPRESSOR NO. 1	*TBD*	11372	M-1.84	PROPOSED
AIR RECEIVER TANK NO. 1	*TBD*	11372	M-1.82	PROPOSED
AIR RECEIVER TANK NO. 1 PRESSURE SWITCH	*TBD*	17121	M-1.82	PROPOSED
AIR RECEIVER TANK NO. 1 PRESSURE GAUGE	*TBD*	17121	M-1.82	PROPOSED
AIR COMPRESSOR NO. 1 DISCONNECT SWITCH	*TBD*	16440	M-1.84	PROPOSED
AIR DRYER NO. 1	*TBD*	11372	M-1.84	PROPOSED
AIR COMPRESSOR NO. 2	*TBD*	11372	M-1.84	PROPOSED
AIR RECEIVER TANK NO. 2	*TBD*	11372	M-1.82	PROPOSED
AIR RECEIVER TANK NO. 2 PRESSURE SWITCH	*TBD*	17121	M-1.82	PROPOSED
AIR RECEIVER TANK NO. 2 PRESSURE GAUGE	*TBD*	17121	M-1.82	PROPOSED
AIR COMPRESSOR NO. 2 DISCONNECT SWITCH	*TBD*	16440	M-1.84	PROPOSED
AIR DRYER NO. 2	*TBD*	11372	M-1.84	PROPOSED
COALESCING FILTER	*TBD*	11372	M-1.84	PROPOSED
COMPRESSED AIR PRESSURE REGULATOR	*TBD*	11295	M-1.84	PROPOSED
COMPRESSED AIR PRESSURE SWITCH NO. 1	*TBD*	17121	M-1.84	PROPOSED

Equipment Description	Equipment Number	Specification Number	Process Sheet	Status
COMPRESSED AIR PRESSURE SWITCH NO. 2	*TBD*	17121	M-1.84	PROPOSED
COMPRESSED AIR PRESSURE GAUGE	*TBD*	17121	M-1.84	PROPOSED
MFS CHEMICAL FACILITY				
SODIUM HYPOCHLORITE FRP STORAGE TANK	*TBD*	13207	M-2.04	PROPOSED
SODIUM HYPOCHLORITE FRP STORAGE TANK FILL LINE 3-INCH BALL VALVE	*TBD*	11295	M-2.04	PROPOSED
SODIUM HYPOCHLORITE FRP STORAGE TANK FILL LINE 3-INCH BALL CHECK VALVE	*TBD*	11295	M-2.04	PROPOSED
SODIUM HYPOCHLORITE FRP STORAGE TANK DRAIN BALL VALVE NO. 1	*TBD*	11295	M-2.04	PROPOSED
SODIUM HYPOCHLORITE FRP STORAGE TANK OVERFLOW BALL VALVE	*TBD*	11295	M-2.04	PROPOSED
SODIUM HYPOCHLORITE FRP STORAGE TANK DRAIN BALL VALVE NO. 2	*TBD*	11295	M-2.04	PROPOSED
SODIUM HYPOCHLORITE FRP STORAGE TANK DISCHARGE BALL VALVE NO. 1	*TBD*	11295	M-2.04	PROPOSED
SODIUM HYPOCHLORITE FRP STORAGE TANK DISCHARGE BALL VALVE NO. 1 ACTUATOR	*TBD*	13447	M-2.04	PROPOSED
SODIUM HYPOCHLORITE FRP STORAGE TANK LEVEL CONTROL PANEL	*TBD*	16161	M-2.04	PROPOSED
SODIUM HYPOCHLORITE FRP STORAGE TANK RADAR LEVEL SENSOR	*TBD*	17125	M-2.04	PROPOSED
SODIUM HYPOCHLORITE STORAGE AREA SUMP LEVEL SWITCH	*TBD*	17111	M-2.04	PROPOSED
SODIUM HYPOCHLORITE STORAGE AREA EYEWASH/SHOWER	*TBD*	15430	M-2.04	PROPOSED

Equipment Description	Equipment Number	Specification Number	Process Sheet	Status
SODIUM HYPOCHLORITE STORAGE AREA EYEWASH/SHOWER FLOW SWITCH	*TBD*	17134	M-2.04	PROPOSED
SODIUM HYPOCHLORITE FILL AREA SUMP LEVEL SWITCH NO. 2	*TBD*	17111	M-2.04	PROPOSED
SODIUM HYPOCHLORITE FILL AREA EYEWASH/SHOWER	*TBD*	15430	M-2.04	PROPOSED
SODIUM HYPOCHLORITE STORAGE AREA EYEWASH/SHOWER FLOW SWITCH	*TBD*	17134	M-2.04	PROPOSED
SODIUM HYPOCHLORITE DIAPHRAGM METERING PUMP NO. 1	*TBD*	11715	M-2.05	PROPOSED
SODIUM HYPOCHLORITE DIAPHRAGM METERING PUMP NO. 1 DISCONNECT SWITCH	*TBD*	16440	M-2.05	PROPOSED
SODIUM HYPOCHLORITE DIAPHRAGM METERING PUMP NO. 1 CALIBRATION COLUMN	*TBD*	11715	M-2.05	PROPOSED
SODIUM HYPOCHLORITE DIAPHRAGM METERING PUMP NO. 1 SUCTION PULSATION DAMPENER	*TBD*	11715	M-2.05	PROPOSED
SODIUM HYPOCHLORITE DIAPHRAGM METERING PUMP NO. 1 SUCTION PRESSURE GAUGE	*TBD*	17121	M-2.05	PROPOSED
SODIUM HYPOCHLORITE DIAPHRAGM METERING PUMP NO. 1 DISCHARGE PULSATION DAMPENER	*TBD*	11715	M-2.05	PROPOSED
SODIUM HYPOCHLORITE DIAPHRAGM METERING PUMP NO. 1 DISCHARGE PRESSURE GAUGE NO. 1	*TBD*	17121	M-2.05	PROPOSED
SODIUM HYPOCHLORITE DIAPHRAGM METERING PUMP NO. 1 DISCHARGE PRESSURE GAUGE NO. 2	*TBD*	17121	M-2.05	PROPOSED
SODIUM HYPOCHLORITE DIAPHRAGM METERING PUMP NO. 1 DICHARGE PRESSURE SWITCH	*TBD*	17121	M-2.05	PROPOSED
SODIUM HYPOCHLORITE DIAPHRAGM METERING PUMP NO. 1 DISCHARGE PRESSURE SWITCH	*TBD*	17121	M-2.05	PROPOSED

Equipment Description	Equipment Number	Specification Number	Process Sheet	Status
SODIUM HYPOCHLORITE DIAPHRAGM METERING PUMP NO. 2	*TBD*	11715	M-2.05	PROPOSED
SODIUM HYPOCHLORITE DIAPHRAGM METERING PUMP NO. 2 DISCONNECT SWITCH	*TBD*	16440	M-2.05	PROPOSED
SODIUM HYPOCHLORITE DIAPHRAGM METERING PUMP NO. 2 CALIBRATION COLUMN	*TBD*	11715	M-2.05	PROPOSED
SODIUM HYPOCHLORITE DIAPHRAGM METERING PUMP NO. 2 SUCTION PULSATION DAMPENER	*TBD*	11715	M-2.05	PROPOSED
SODIUM HYPOCHLORITE DIAPHRAGM METERING PUMP NO. 2 SUCTION PRESSURE GAUGE	*TBD*	17121	M-2.05	PROPOSED
SODIUM HYPOCHLORITE DIAPHRAGM METERING PUMP NO. 2 DISCHARGE PULSATION DAMPENER	*TBD*	11715	M-2.05	PROPOSED
SODIUM HYPOCHLORITE DIAPHRAGM METERING PUMP NO. 2 DISCHARGE PRESSURE GAUGE NO. 1	*TBD*	17121	M-2.05	PROPOSED
SODIUM HYPOCHLORITE DIAPHRAGM METERING PUMP NO. 2 DISCHARGE PRESSURE GAUGE NO. 2	*TBD*	17121	M-2.05	PROPOSED
SODIUM HYPOCHLORITE DIAPHRAGM METERING PUMP NO. 2 DICHARGE PRESSURE SWITCH	*TBD*	17121	M-2.05	PROPOSED
SODIUM HYPOCHLORITE DIAPHRAGM METERING PUMP NO. 2 DISCHARGE PRESSURE SWITCH	*TBD*	17121	M-2.05	PROPOSED
SODIUM HYPOCHLORITE MAGNETIC FLOW METER	*TBD*	17137	M-2.05	PROPOSED
CITRIC ACID STORAGE AREA SUMP LEVEL SWITCH	*TBD*	17111	M-2.10	PROPOSED
CITRIC ACID STORAGE AREA TOTE BALL VALVE NO. 1	*TBD*	11295	M-2.10	PROPOSED
CITRIC ACID STORAGE AREA TOTE BALL VALVE NO. 2	*TBD*	11295	M-2.10	PROPOSED
CITRIC ACID DIAPHRAGM METERING PUMP NO. 1	*TBD*	11715	M-2.11	PROPOSED

Equipment Description	Equipment Number	Specification Number	Process Sheet	Status
CITRIC ACID DIAPHRAGM METERING PUMP NO. 1 DISCONNECT SWITCH	*TBD*	16440	M-2.11	PROPOSED
CITRIC ACID DIAPHRAGM METERING PUMP NO. 1 CALIBRATION COLUMN	*TBD*	11715	M-2.11	PROPOSED
CITRIC ACID DIAPHRAGM METERING PUMP NO. 1 SUCTION PULSATION DAMPENER	*TBD*	11715	M-2.11	PROPOSED
CITRIC ACID DIAPHRAGM METERING PUMP NO. 1 SUCTION PRESSURE GAUGE	*TBD*	17121	M-2.11	PROPOSED
CITRIC ACID DIAPHRAGM METERING PUMP NO. 1 DISCHARGE PULSATION DAMPENER	*TBD*	11715	M-2.11	PROPOSED
CITRIC ACID DIAPHRAGM METERING PUMP NO. 1 DISCHARGE PRESSURE GAUGE NO. 1	*TBD*	17121	M-2.11	PROPOSED
CITRIC ACID DIAPHRAGM METERING PUMP NO. 1 DISCHARGE PRESSURE GAUGE NO. 2	*TBD*	17121	M-2.11	PROPOSED
CITRIC ACID DIAPHRAGM METERING PUMP NO. 1 DISCHARGE PRESSURE SWITCH	*TBD*	17121	M-2.11	PROPOSED
CITRIC ACID DIAPHRAGM METERING PUMP NO. 1 DISCHARGE PRESSURE SWITCH	*TBD*	17121	M-2.11	PROPOSED
CITRIC ACID DIAPHRAGM METERING PUMP NO. 2	*TBD*	11715	M-2.11	PROPOSED
CITRIC ACID DIAPHRAGM METERING PUMP NO. 2 DISCONNECT SWITCH	*TBD*	16440	M-2.11	PROPOSED
CITRIC ACID DIAPHRAGM METERING PUMP NO. 2 CALIBRATION COLUMN	*TBD*	11715	M-2.11	PROPOSED
CITRIC ACID DIAPHRAGM METERING PUMP NO. 2 SUCTION PULSATION DAMPENER	*TBD*	11715	M-2.11	PROPOSED
CITRIC ACID DIAPHRAGM METERING PUMP NO. 2 SUCTION PRESSURE GAUGE	*TBD*	17121	M-2.11	PROPOSED

Equipment Description	Equipment Number	Specification Number	Process Sheet	Status
CITRIC ACID DIAPHRAGM METERING PUMP NO. 2 DISCHARGE PULSATION DAMPENER	*TBD*	11715	M-2.11	PROPOSED
CITRIC ACID DIAPHRAGM METERING PUMP NO. 2 DISCHARGE PRESSURE GAUGE NO. 1	*TBD*	17121	M-2.11	PROPOSED
CITRIC ACID DIAPHRAGM METERING PUMP NO. 2 DISCHARGE PRESSURE GAUGE NO. 2	*TBD*	17121	M-2.11	PROPOSED
CITRIC ACID DIAPHRAGM METERING PUMP NO. 2 DISCHARGE PRESSURE SWITCH NO. 2	*TBD*	17121	M-2.11	PROPOSED
CITRIC ACID DIAPHRAGM METERING PUMP NO. 2 DISCHARGE PRESSURE SWITCH	*TBD*	17121	M-2.11	PROPOSED
CITRIC ACID MAGNETIC FLOW METER	*TBD*	17137	M-2.11	PROPOSED
SULFURIC ACID STORAGE AREA SUMP LEVEL SWITCH	*TBD*	17111	M-2.10	PROPOSED
SULFURIC ACID STORAGE AREA EYEWASH/SHOWER	*TBD*	15430	M-2.10	PROPOSED
SULFURIC ACID STORAGE AREA EYEWASH/SHOWER FLOW SWITCH	*TBD*	17134	M-2.10	PROPOSED
SULFURIC ACID STORAGE AREA TOTE BALL VALVE NO. 1	*TBD*	11295	M-2.10	PROPOSED
SULFURIC ACID STORAGE AREA TOTE BALL VALVE NO. 2	*TBD*	11295	M-2.10	PROPOSED
SULFURIC ACID TOTE SCALE	*TBD*	13466	M-2.10	PROPOSED
SULFURIC ACID STORAGE AREA TOTE DRAIN BALL VALVE	*TBD*	11295	M-2.10	PROPOSED
SULFURIC ACID DIAPHRAGM METERING PUMP	*TBD*	11715	M-2.10	PROPOSED
SULFURIC ACID DIAPHRAGM METERING PUMP DISCONNECT SWITCH	*TBD*	16440	M-2.10	PROPOSED
SULFURIC ACID DIAPHRAGM METERING PUMP CALIBRATION COLUMN	*TBD*	11715	M-2.12	PROPOSED

Equipment Description	Equipment Number	Specification Number	Process Sheet	Status
SULFURIC ACID DIAPHRAGM METERING PUMP SUCTION PULSATION DAMPENER	*TBD*	11715	M-2.12	PROPOSED
SULFURIC ACID DIAPHRAGM METERING PUMP SUCTION PRESSURE GAUGE	*TBD*	17121	M-2.12	PROPOSED
SULFURIC ACID DIAPHRAGM METERING PUMP DISCHARGE PULSATION DAMPENER	*TBD*	11715	M-2.12	PROPOSED
SULFURIC ACID DIAPHRAGM METERING PUMP DISCHARGE PRESSURE GAUGE NO. 1	*TBD*	17121	M-2.12	PROPOSED
SULFURIC ACID DIAPHRAGM METERING PUMP DISCHARGE PRESSURE GAUGE NO. 2	*TBD*	17121	M-2.12	PROPOSED
SULFURIC ACID DIAPHRAGM METERING PUMP DISCHARGE PRESSURE SWITCH	*TBD*	17121	M-2.12	PROPOSED
SULFURIC ACID MAGNETIC FLOW METER	*TBD*	17137	M-2.12	PROPOSED
SODIUM BISULFITE STORAGE AREA SUMP LEVEL SWITCH	*TBD*	17111	M-2.10	PROPOSED
SULFURIC ACID STORAGE AREA TOTE BALL VALVE NO. 1	*TBD*	11295	M-2.10	PROPOSED
SULFURIC ACID STORAGE AREA TOTE BALL VALVE NO. 2	*TBD*	11295	M-2.10	PROPOSED
SULFURIC ACID TOTE SCALE	*TBD*	13466	M-2.10	PROPOSED
SULFURIC ACID STORAGE AREA TOTE DRAIN BALL VALVE	*TBD*	11295	M-2.10	PROPOSED
SODIUM BISULFITE TOTE SCALE	*TBD*	13466	M-2.10	PROPOSED
SODIUM BISULFITE DIAPHRAGM METERING PUMP	*TBD*	11715	M-2.12	PROPOSED
SODIUM BISULFITE DIAPHRAGM METERING PUMP DISCONNECT SWITCH	*TBD*	16440	M-2.12	PROPOSED
SODIUM BISULFITE DIAPHRAGM METERING PUMP CALIBRATION COLUMN	*TBD*	11715	M-2.12	PROPOSED

Equipment Description	Equipment Number	Specification Number	Process Sheet	Status
SODIUM BISULFITE DIAPHRAGM METERING PUMP SUCTION PULSATION DAMPENER	*TBD*	11715	M-2.12	PROPOSED
SODIUM BISULFITE DIAPHRAGM METERING PUMP SUCTION PRESSURE GAUGE	*TBD*	17121	M-2.12	PROPOSED
SODIUM BISULFITE DIAPHRAGM METERING PUMP DISCHARGE PULSATION DAMPENER	*TBD*	11715	M-2.12	PROPOSED
SODIUM BISULFITE DIAPHRAGM METERING PUMP DISCHARGE PRESSURE GAUGE	*TBD*	11715	M-2.12	PROPOSED
SODIUM BISULFITE DIAPHRAGM METERING PUMP DISCHARGE PRESSURE GAUGE	*TBD*	17121	M-2.12	PROPOSED
SODIUM BISULFITE DIAPHRAGM METERING PUMP DISCHARGE PRESSURE SWITCH	*TBD*	17121	M-2.12	PROPOSED
SODIUM BISULFITE MAGNETIC FLOW METER	*TBD*	17137	M-2.12	PROPOSED
SODIUM HYDROXIDE STORAGE TOTE FLOOR SCALE	*TBD*	13466	M-2.10	PROPOSED
SODIUM HYDROXIDE STORAGE AREA SUMP LEVEL SWITCH	*TBD*	17111	M-2.12	PROPOSED
SODIUM HYDROXIDE STORAGE AREA TOTE BALL VALVE NO. 1	*TBD*	11295	M-2.10	PROPOSED
SODIUM HYDROXIDE STORAGE AREA TOTE BALL VALVE NO. 2	*TBD*	11295	M-2.10	PROPOSED
SODIUM HYDROXIDE TOTE SCALE	*TBD*	13466	M-2.10	PROPOSED
SODIUM HYDROXIDE STORAGE AREA TOTE DRAIN BALL VALVE	*TBD*	11295	M-2.10	PROPOSED
SODIUM HYDROXIDE DIAPHRAGM METERING PUMP	*TBD*	11715	M-2.12	PROPOSED
SODIUM HYDROXIDE DIAPHRAGM METERING PUMP DISCONNECT SWITCH	*TBD*	16440	M-2.12	PROPOSED

Equipment Description	Equipment Number	Specification Number	Process Sheet	Status
SODIUM HYDROXIDE DIAPHRAGM METERING PUMP CALIBRATION COLUMN	*TBD*	11715	M-2.12	PROPOSED
SODIUM HYDROXIDE DIAPHRAGM METERING PUMP SUCTION PULSATION DAMPENER	*TBD*	11715	M-2.12	PROPOSED
SODIUM HYDROXIDE DIAPHRAGM METERING PUMP SUCTION PRESSURE GAUGE	*TBD*	17121	M-2.12	PROPOSED
SODIUM HYDROXIDE DIAPHRAGM METERING PUMP DISCHARGE PULSATION DAMPENER	*TBD*	11715	M-2.12	PROPOSED
SODIUM HYDROXIDE DIAPHRAGM METERING PUMP DISCHARGE PRESSURE GAUGE	*TBD*	17121	M-2.12	PROPOSED
SODIUM HYDROXIDE DIAPHRAGM METERING PUMP DISCHARGE PRESSURE GAUGE NO. 2	*TBD*	17121	M-2.12	PROPOSED
SODIUM HYDROXIDE DIAPHRAGM METERING PUMP DISCHARGE PRESSURE SWITCH	*TBD*	17121	M-2.12	PROPOSED
SODIUM HYDROXIDE MAGNETIC FLOW METER	*TBD*	17137	M-2.12	PROPOSED
ACH FACILITY				
ACH STORAGE TOTE FLOOR SCALE	*TBD*	13466	M-2.23	PROPOSED
ACH STORAGE AREA SUMP LEVEL SWITCH	*TBD*	17134	M-2.23	PROPOSED
ACH STORAGE AREA EYEWASH/SHOWER	*TBD*	15430	M-2.23	PROPOSED
ACH STORAGE AREA EYEWASH/SHOWER FLOW SWITCH	*TBD*	17111	M-2.23	PROPOSED
ACH STORAGE AREA TOTE BALL VALVE NO. 1	*TBD*	11295	M-2.23	PROPOSED
ACH STORAGE AREA TOTE BALL VALVE NO. 2	*TBD*	11295	M-2.23	PROPOSED
ACH TOTE SCALE	*TBD*	13466	M-2.23	PROPOSED

Equipment Description	Equipment Number	Specification Number	Process Sheet	Status
ACH STORAGE AREA TOTE DRAIN BALL VALVE	*TBD*	11295	M-2.23	PROPOSED
ACH DIAPHRAGM METERING PUMP NO. 1 DISCONNECT SWITCH	*TBD*	16440	M-2.24	PROPOSED
ACH DIAPHRAGM METERING PUMP NO. 1 CALIBRATION COLUMN	*TBD*	1715	M-2.24	PROPOSED
ACH DIAPHRAGM METERING PUMP NO. 1 SUCTION PULSATION DAMPENER	*TBD*	11715	M-2.24	PROPOSED
ACH DIAPHRAGM METERING PUMP NO. 1 SUCTION PRESSURE GAUGE	*TBD*	17121	M-2.24	PROPOSED
ACH DIAPHRAGM METERING PUMP NO. 1 DISCHARGE PULSATION DAMPENER	*TBD*	11715	M-2.24	PROPOSED
ACH DIAPHRAGM METERING PUMP NO. 1 DISCHARGE PRESSURE GAUGE NO. 1	*TBD*	17121	M-2.24	PROPOSED
ACH DIAPHRAGM METERING PUMP NO. 1 DISCHARGE PRESSURE GAUGE NO. 2	*TBD*	17121	M-2.24	PROPOSED
ACH DIAPHRAGM METERING PUMP NO. 1 DISCHARGE PRESSURE SWITCH NO. 1	*TBD*	17121	M-2.23	PROPOSED
ACH DIAPHRAGM METERING PUMP NO. 1 DISCHARGE PRESSURE SWITCH NO. 1	*TBD*	17121	M-2.23	PROPOSED
ACH DIAPHRAGM METERING PUMP NO. 2	*TBD*	11715	M-2.24	PROPOSED
ACH DIAPHRAGM METERING PUMP NO. 2 DISCONNECT SWITCH	*TBD*	16440	M-2.24	PROPOSED
ACH DIAPHRAGM METERING PUMP NO. 2 CALIBRATION COLUMN	*TBD*	11715	M-2.24	PROPOSED
ACH DIAPHRAGM METERING PUMP NO. 2 SUCTION PULSATION DAMPENER	*TBD*	11715	M-2.24	PROPOSED

Equipment Description	Equipment Number	Specification Number	Process Sheet	Status
ACH DIAPHRAGM METERING PUMP NO. 2 SUCTION PRESSURE GAUGE	*TBD*	17121	M-2.24	PROPOSED
ACH DIAPHRAGM METERING PUMP NO. 2 DISCHARGE PULSATION DAMPENER	*TBD*	11715	M-2.24	PROPOSED
ACH DIAPHRAGM METERING PUMP NO. 2 DISCHARGE PRESSURE GAUGE NO. 1	*TBD*	17121	M-2.24	PROPOSED
ACH DIAPHRAGM METERING PUMP NO. 2 DISCHARGE PRESSURE GAUGE NO. 2	*TBD*	17121	M-2.24	PROPOSED
ACH DIAPHRAGM METERING PUMP NO. 2 DISCHARGE PRESSURE SWITCH	*TBD*	17121	M-2.23	PROPOSED
ACH MAGNETIC FLOW METER	*TBD*	17137	M-2.24	PROPOSED
ACH FEED AREA SUMP LEVEL SWITCH	*TBD*	17111	M-2.24	PROPOSED
ACH FEED AREA EYEWASH/SHOWER	*TBD*	15430	M-2.23	PROPOSED
ACH FEED AREA EYEWASH/SHOWER FLOW SWITCH	*TBD*	17111	M-2.23	PROPOSED
MODIFIED BULK SODIUM HYPOCHLORITE FACILITY				
DISINFECTION SODIUM HYPOCHLORITE DIAPHRAGM METERING PUMP NO. 1	*TBD*	11715	M-2.31	PROPOSED
DISINFECTION SODIUM HYPOCHLORITE DIAPHRAGM METERING PUMP NO. 1 CALIBRATION COLUMN	*TBD*	11715	M-2.31	PROPOSED
DISINFECTION SODIUM HYPOCHLORITE DIAPHRAGM METERING PUMP NO. 1 SUCTION PULSATION DAMPENER	*TBD*	11715	M-2.31	PROPOSED
DISINFECTION SODIUM HYPOCHLORITE DIAPHRAGM METERING PUMP NO. 1 SUCTION PRESSURE GAUGE	*TBD*	17121	M-2.31	PROPOSED
DISINFECTION SODIUM HYPOCHLORITE DIAPHRAGM METERING PUMP NO. 1 DISCHARGE PULSATION DAMPENER	*TBD*	11715	M-2.31	PROPOSED

Equipment Description	Equipment Number	Specification Number	Process Sheet	Status
DISINFECTION SODIUM HYPOCHLORITE DIAPHRAGM METERING PUMP NO. 1 DISCHARGE PRESSURE GAUGE	*TBD*	17121	M-2.31	PROPOSED
DISINFECTION SODIUM HYPOCHLORITE DIAPHRAGM METERING PUMP NO. 1 DISCONNECT SWITCH	*TBD*	16440	M-2.31	PROPOSED
DISINFECTION SODIUM HYPOCHLORITE DIAPHRAGM METERING PUMP NO. 1 DISCHARGE PRESSURE SWITCH	*TBD*	17121	M-2.31	PROPOSED
DISINFECTION SODIUM HYPOCHLORITE DIAPHRAGM METERING PUMP NO. 2	*TBD*	11715	M-2.31	PROPOSED
DISINFECTION SODIUM HYPOCHLORITE DIAPHRAGM METERING PUMP NO. 2 CALIBRATION COLUMN	*TBD*	11715	M-2.31	PROPOSED
DISINFECTION SODIUM HYPOCHLORITE DIAPHRAGM METERING PUMP NO. 2 SUCTION PULSATION DAMPENER	*TBD*	11715	M-2.31	PROPOSED
DISINFECTION SODIUM HYPOCHLORITE DIAPHRAGM METERING PUMP NO. 2 SUCTION PRESSURE GAUGE	*TBD*	17121	M-2.31	PROPOSED
DISINFECTION SODIUM HYPOCHLORITE DIAPHRAGM METERING PUMP NO. 2 DISCHARGE PULSATION DAMPENER	*TBD*	11715	M-2.31	PROPOSED
DISINFECTION SODIUM HYPOCHLORITE DIAPHRAGM METERING PUMP NO. 2 DISCHARGE PRESSURE GAUGE	*TBD*	17121	M-2.31	PROPOSED
DISINFECTION SODIUM HYPOCHLORITE DIAPHRAGM METERING PUMP NO. 2 DISCONNECT SWITCH	*TBD*	16440	M-2.31	PROPOSED
DISINFECTION SODIUM HYPOCHLORITE DIAPHRAGM METERING PUMP NO. 2 DISCHARGE PRESSURE SWITCH	*TBD*	17121	M-2.31	PROPOSED

PART 2 - PRODUCTS (NOT USED)

PART 3 - EXECUTION (NOT USED)

++ END OF SECTION ++

SECTION 01821

INSTRUCTION OF OPERATIONS AND MAINTENANCE PERSONNEL

PART 1 - GENERAL

1.1 DESCRIPTION

A. CONTRACTOR shall provide the services of factory-trained maintenance specialists to instruct OWNER'S operations and maintenance personnel in the recommended operation and the preventive maintenance procedures for equipment specified in the equipment Sections.

B. The qualifications of specialists shall be subject to approval by ENGINEER.

C. CONTRACTOR shall coordinate these services at times acceptable to OWNER and ENGINEER, with a minimum of 14 days prior notice.

D. Manufacturer shall provide a combination of classroom and field training. All training shall be conducted at the facility, unless otherwise stated in the Equipment Sections. Class size shall be limited to no more than 15 trainees. Manufacturer shall provide training for all plant shifts, or as approved by OWNER.

E. Manufacturer shall allow any and all training sessions to be videotaped by OWNER.

F. Section 01640, Materials and Equipment; Section 01650, Starting of Systems; Section 01660, Field Tests of Equipment; and, additional requirements for manufacturer's and supplier's field and test data.

G. Instruction of OWNER'S personnel shall commence only after the equipment has been started, approved Operation and Maintenance Manuals have been turned over to the OWNER, and acceptance tests have been completed according to the provisions in Section 01650, Starting of Systems.

H. CONTRACTOR shall submit a copy of this Section 01821, Instruction of Operations and Maintenance Personnel, to all manufacturers of equipment for this Contract.

1.2 SUBMITTALS

A. Manufacturer shall submit for approval the following:
   1. Proposed Lesson Plan for each scheduled instruction 28 days prior to commencement of training. Lesson plans shall be approved a minimum of 14 days prior to scheduled instruction.

2. Credentials of their designated operations and maintenance instructor. Credentials shall include a brief resume and specific details of the instructor's experience pertaining to operation of, maintenance of, and training for the equipment specified.
3. Training Request Form: CONTRACTOR shall submit the Training Request Form to the ENGINEER 28 days prior to the requested training date.
4. There shall be separate "Operations" and "Maintenance" staff training.

B. Shop Drawings: Submit for approval the following:
1. Comply with the requirements of Section 01300, Submittals.
2. CONTRACTOR shall submit an electronic copy per Section 01300, Submittals.
3. A copy of this specification section, with addendum updates included, and all referenced and applicable sections, with addendum updates included, with each paragraph check-marked to indicate specification compliance or marked to indicate requested deviations from specification requirements. Check marks (✓) shall denote full compliance with a paragraph as a whole. If deviations from the specifications are indicated, and therefore requested by the CONTRACTOR, each deviation shall be underlined and denoted by a number in the margin to the right of the identified paragraph, referenced to a detailed written explanation of the reasons for requesting the deviation. The ENGINEER shall be the final authority for determining acceptability of requested deviations. The CONTRACTOR shall furnish equipment and/or services as specified if an exception and/or deviation is rejected. The remaining portions of the paragraph not underlined will signify compliance on the part of the CONTRACTOR with the specifications. Failure to include a copy of the marked-up specification sections, along with justification(s) for any requested deviations to the specification requirements, with the submittal shall be sufficient cause for rejection of the entire submittal with no further consideration.
4. The CONTRACTOR shall submit the preventive maintenance information package as part of the shop drawing submittal package to the ENGINEER for review and approval. SHOP DRAWING SUBMITTAL PACKAGE WILL NOT BE APPROVED WITHOUT ACCEPTANCE OF PREVENTIVE MAINTENANCE INFORMATION.

1.3 INSTRUCTION LESSON PLAN

A. Manufacturer's proposed Lesson Plan shall include the elements presented in the outline of Instruction Lesson Plan in Paragraph 1.3.D., below, of this Section. Specific components and procedures shall be identified in the proposed Lesson Plan.

B. Manufacturer's proposed Lesson Plan shall detail specific instruction topics. Training aids to be utilized in the instruction shall be referenced and attached

where applicable to the proposed Lesson Plan. "Hands-On" demonstrations planned for the instruction shall be described in the Lesson Plan.

C. The manufacturer shall indicate the estimated duration of each segment of the training Lesson Plan.

D. Instruction Lesson Plan shall include the following as a minimum:
   1. Equipment Operation:
      a. Describe equipment's operating (process) function.
      b. Describe equipment's fundamental operating principals and dynamics.
      c. Identify equipment's mechanical, electrical and electronic components and features.
      d. Identify all support equipment associated with the operation of subject equipment (e.g., air intake filters, valve actuators, motors).
      e. Recommend standard operating procedures to cover start-up, routine monitoring and shutdown of the equipment.
   2. Detailed Component Description:
      a. Identify and describe in detail each component's function.
      b. Where applicable, group related components into subsystems. Describe subsystem functions and their interaction with other subsystems.
      c. Identify and describe in detail equipment safeties and control interlocks.
   3. Equipment Preventive Maintenance (PM):
      a. Describe PM inspection procedures required to:
         1) Perform an inspection of the equipment in operation.
         2) Spot potential trouble symptoms and anticipate breakdowns.
         3) Forecast maintenance requirements (predictive maintenance).
      b. Define the recommended PM intervals for each component.
      c. Provide lubricant and replacement part recommendations and limitations.
      d. Describe appropriate cleaning practices and recommend intervals.
      e. Identify and describe the use of special tools required for maintenance of the equipment.
      f. Describe component removal/installation and disassembly/assembly procedures.
      g. Perform at least two "hands-on" demonstrations of preventive maintenance procedures.
      h. Describe recommended measuring instruments and procedures, and provide instruction on interpreting alignment measurements, as appropriate.
      i. Define recommended torquing, mounting, calibration and/or alignment procedures and settings, as appropriate.
      j. Describe recommended procedures to check/test equipment following a corrective repair.
   4. Equipment Troubleshooting:
      a. Define recommended systematic troubleshooting procedures.
      b. Provide component specific troubleshooting checklists.

c. Describe applicable equipment testing and diagnostic procedures to facilitate troubleshooting.

1.4 TRAINING AIDS

A. The manufacturer's instructor shall incorporate training aids as appropriate to assist in the instruction. As a minimum, the training aids shall include text and figure handouts. Other appropriate training aids are:
   1. Audio-Visual Aids (e.g., films, slides, videotapes, overhead transparencies, posters, blueprints, diagrams, catalogue sheets).
   2. Equipment cutaways and samples (e.g., spare parts and damaged equipment).
   3. Tools (e.g., repair tools, customized tools, measuring and calibrating instruments).

B. The manufacturer's instructor shall utilize descriptive class handouts during the instruction. Photocopied class handouts shall be good quality reproductions. Class handouts should accompany the instruction with frequent reference made to them. Customized handouts developed especially for the instruction are encouraged. Handouts planned for the instruction shall be attached with the manufacturer's proposed Lesson Plan.

1.5 "HANDS-ON" DEMONSTRATIONS

A. The manufacturer's instructor shall present "hands-on" demonstrations of operations and maintenance of the equipment for each scheduled group. The proposed "hands-on" demonstrations should be described in the manufacturer's proposed Lesson Plan.

1.6 TRAINING SCHEDULE

A. Each manufacturer shall provide as a minimum the following hours of training. Travel time and expenses are responsibility of manufacturer and are not included in training schedule time.

B. The CONTRACTOR shall provide experienced, competent manufacturers' representatives to train OWNER'S personnel in operation and maintenance procedures for equipment items specified below during the start-up period at no additional cost to OWNER. The Lesson Plans for these sessions shall be reviewed with the OWNER and the ENGINEER in one meeting prior to initiating training. Lesson Plans shall be submitted to the ENGINEER not less than one week prior to this meeting. CONTRACTOR will video tape the manufacturers' training sessions and provide OWNER with DVD format professional quality discs of the training sessions. The representatives shall present training programs and on-site demonstrations designed to fully acquaint plant personnel with all equipment features, routine scheduled maintenance procedures, alternative operational modes, emergency procedures, spare parts inventories, and demonstrate performance requirements of the Specifications. Representatives

shall remain on-site to observe operation of the equipment and further advise plant personnel for a minimum number of hours as specified below:

Equipment	Additional Training Days (Day = 8 hrs minimum)
Overhead Coiling Doors	1
Sample Pumps	1
Inline Rapid Mixers	1
Hydraulic Gates	½
Hydraulic Valves	½ for each valve type listed
Submersible Pumps	3
Self-Cleaning Strainers	3
Membrane Filtration System	3
Hoists, Trolleys and Monorail	1
Positive Displacement Blowers	3
Air Compressor	3
Chemical Metering Pumps and Appurtenances	3
Electric Operator	3
Pneumatic Controllers and Control Valves	3
Electric Motor Actuator	½
Wet Pipe Fire Extinguishing System	1
Sump Pumps	3
Control Panels	3
Electric Motors 250HP or Less	3
Surge Protection Devices	1
Oil Filled Substation Transformers	1
Medium Voltage Load Interrupter Switchgear	1
Customer Power Metering System	1
Disconnect Switches	1
Transformers Dry Type	1
Panelboards	1
Motor Control Equipment	3
Motor Control Centers (MCC)	3
Solid State Motor Controllers	3
Variable Frequency Drives for - Low Voltage	3
Manual Transfer Switch	1
Lighting	1
Static Uninterrupted Power Supply	1
Fire Surveillance and Alarm System	1
Pressure Switches and Gauges	1
Pressure Transmitters	1
Level Transmitters – Pressure Type	1
Radar Level Transmitter	1
Flow Switches	1

Equipment	Additional Training Days (Day = 8 hrs minimum)
Magnetic Flow Meters	1
Insertion Mass Flow Meters	1
Limit and Position Switches	1
Electronic 4-20 mA Indicators	1
Signal Conditioners	1
Submersible Level Transmitter	1
Pressure Switches and Gauges	1
Turbidity and TSS Analyzer	½
pH/ORP Sensors and Analyzers	½
Chlorine Residual Analyzer	½
AB PLC System Hardware ControlLogix	3

C. A complete schedule of representatives and dates for operator training shall be submitted to OWNER prior to commencement of the start-up period. This schedule shall be prepared to accommodate the plant staff's work schedules, including training on all three shifts and staff flex time.

D. The plant operators work on a shift schedule. Develop the training schedule to account for training classes for each shift.

PART 2 - PRODUCTS (NOT USED)

PART 3 - EXECUTION (NOT USED)

TRAINING REQUEST FORM
CITY OF CHANDLER
RWIF PROJECT

SPECIFICATION SECTION 01821
INSTRUCTION OF OPERATIONS AND MAINTENANCE PERSONNEL

Equipment Name: _____

Equipment Tag Number: _____

Equipment Description: _____

Specification Section: _____

Operations and Maintenance Data Submitted/Approved: _____

Start-up and Testing Complete/Date: _____

Lesson Plan Submitted/Approved: _____

Training Aids Submitted/Approved: _____

Hands-on Demonstration: _____

Training Schedule (Dates, Time, No. of Sessions): _____

_____

_____

_____

_____

_____

++ END OF SECTION ++

SECTION 02050

DEMOLITIONS

PART 1 - GENERAL

1.1 SUMMARY

A. Scope:
   1. Provide all labor, materials, equipment, and incidentals as shown on the Drawings, specified, and required for demolitions, removal and disposal Work.
   2. Included, but not limited to, are demolition and removals of existing materials, equipment, or work necessary to install the Work as shown on the Drawings, specified, and required to connect same with existing work in an approved manner. Demolition includes structural concrete, foundations, walls, doors, windows, structural steel, metals, roofs, masonry, attachments, appurtenances, piping, electrical and mechanical equipment, paving, curbs, walks, fencing, and similar existing facilities.
   3. Demolitions and removals which may be specified under other Sections shall conform to requirements of this Section.
   4. Pay for all landfill disposal fees.

1.2 RELATED SECTIONS

A. Section 01012, Plant Operation During Construction

B. Section 02315, Earthwork, Excavation and Backfill

C. Section 03300, Cast in Place Concrete

D. Section 15050, Piping Systems

E. Section 15051, Buried Piping

1.3 SUBMITTALS

A. Schedule: Submit for approval proposed methods, equipment, and operating sequences. Include coordination for shut-off, capping, temporary services, continuation of utility services, and other applicable items to ensure no interruption of OWNER'S operations.

B. Shop Drawings: Submit for approval the following:
   1. A copy of this specification section, with addendum updates included, and all referenced and applicable sections, with addendum updates included, with each paragraph check-marked to indicate specification compliance or marked to indicate requested deviations from specification requirements. Check marks (✓) shall denote full compliance with a paragraph as a whole. If deviations

from the specifications are indicated, and therefore requested by the CONTRACTOR, each deviation shall be underlined and denoted by a number in the margin to the right of the identified paragraph, referenced to a detailed written explanation of the reasons for requesting the deviation. The ENGINEER shall be the final authority for determining acceptability of requested deviations. The CONTRACTOR shall furnish equipment and/or services as specified if an exception and/or deviation is rejected. The remaining portions of the paragraph not underlined will signify compliance on the part of the CONTRACTOR with the specifications. Failure to include a copy of the marked-up specification sections, along with justification(s) for any requested deviations to the specification requirements, with the submittal shall be sufficient cause for rejection of the entire submittal with no further consideration.

1.4 JOB CONDITIONS

A. Protection:
   1. Perform all demolition and removal Work to prevent damage or injury to structures, occupants thereof, and adjacent features which might result from falling debris or other causes, and so as not to interfere with the use and free and safe passage to and from adjacent structures.
   2. Closing or obstructing of roadways, sidewalks, and passageways adjacent to the Work by the placement or storage of materials will not be permitted, and all operations shall be conducted with a minimum interference to traffic on these ways.
   3. Erect and maintain barriers, lights, sidewalk sheds, and other necessary protective devices.
   4. Repair damage to facilities to remain or to any property belonging to the OWNER.

B. Scheduling:
   1. All Demolition will be performed in strict accordance with Section 01012, Plant Operation During Construction.

C. Notification:
   1. At least 48 hours prior to commencement of a demolition or removal, notify ENGINEER, in writing, of proposed schedule. OWNER will inspect the existing equipment and mark for identification those items which are to remain the property of the OWNER. Do not start removals without the permission of the ENGINEER.

D. Explosives will not be permitted.

E. Comply with NFPA 241 - Standard for Safeguarding Construction, Alterations, and Demolition Operations.

F. All operating utilities intersecting the areas of demolition shall be located and protected by the CONTRACTOR prior to commencement of Work.

1.5 EXISTING STRUCTURE CONSTRUCTION

A. CONTRACTOR shall field verify all existing conditions and notify the ENGINEER for any discrepancies before proceeding with the Work.

B. Perform the removal, cutting, drilling, etc., of existing Work with extreme care, using small tools in order not to jeopardize the structural integrity of the structure.

C. Safely shore existing construction whenever existing supports are removed to allow the installation of new Work.

D. All existing facilities in the vicinity of the construction area shall be protected in place by methods deemed necessary by the CONTRACTOR.

E. Rebuild any existing Work which has to be removed to allow the installation of new Work.

F. Perform cutting of existing concrete and masonry with saws and core drills. Do not use jack-hammers.

PART 2 - PRODUCTS (NOT USED)

PART 3 - EXECUTION

3.1 GENERAL

A. All materials and equipment removed from existing Work shall become the property of CONTRACTOR, except items designated to be re-used or salvaged. All materials and equipment marked by the OWNER to remain the property of the OWNER shall be carefully removed by CONTRACTOR, so as not to be damaged, and shall be cleaned and stored on or adjacent to the site in a protected place specified by the ENGINEER or loaded onto trucks provided by the OWNER.

B. Dispose of all demolition materials, equipment, debris, and all other items not marked by the OWNER to remain off the site and in conformance with all existing applicable laws and regulations.

C. Surfaces of walls, floors, ceilings, or other areas which are exposed by any of the removals specified herein, and which will remain as architecturally finished surfaces shall be repaired and re-finished by CONTRACTOR with the same or matching materials as the existing adjacent surface or as may be otherwise approved by the ENGINEER.

D. Pollution Controls: Use water sprinkling, temporary enclosures, and other suitable methods to limit the amount of dust and dirt rising and scattering in the air to the lowest practical level. Comply with governing regulations pertaining to environmental protection.
   1. Do not use water when it may create hazardous or objectionable conditions such as ice, flooding, and pollution.
   2. Clean adjacent structures, facilities, and improvements of dust, dirt, and debris caused by demolition operations. Return adjacent areas to conditions existing prior to the start of the Work.

E. Pavement Demolition:
   1. All asphalt and concrete pavement demolition shall terminate at cut edges. All edges shall be linear and have a vertical cut face.

F. All anchor bolts for removed equipment and supports and structural steel cast in concrete shall be removed 1-1/2-inches below the surface of the concrete and the depression filled with epoxy grout flush with the concrete surface. Removal procedures will provide a 90 degree angle between the existing surface and bolt hole to minimize grout spalling.

G. All concrete saw cutting indicated on the Plans shall be done with appropriate equipment to produce a smooth, square cut. Cut surfaces shall be sealed as specified in Section 03300, Cast-In-Place Concrete. All depressions in concrete left as a result of demolition shall be repaired as specified in Section 03300, Cast-In-Place Concrete.

H. All earthen depressions, voids, and holes which are a result of demolition shall be filled. Fill material shall be native soils compacted to a uniform density as defined in Section 02315, Earthwork, Excavation and Backfill.

I. All areas of demolition shall be graded in a manner to conform to the final lines and elevations shown on the plans. Drainage shall be maintained away from all structures as defined in Section 02315, Earthwork, Excavation and Backfill.

J. Several existing structure were designed for future expansions. Several knockout walls were installed to facilitate future expansions. Remove existing knockout walls where called out on drawings. Also remove flashing installed in areas to facilitate future extensions.

3.2 STRUCTURAL REMOVALS

A. Remove structures to the lines and grades shown on the Drawings, unless otherwise directed by the ENGINEER. Where no limits are shown on the Drawings, the limits shall be 4-inches outside the item to be installed. The removal of masonry beyond these limits shall be at CONTRACTOR'S expense and these excess removals shall be reconstructed to the satisfaction of the ENGINEER, with no additional compensation to CONTRACTOR.

B. All concrete, brick, tile, concrete block, roofing materials, reinforcement, structural or miscellaneous metals, plaster, wire mesh and other items contained in or upon the structure shall be removed and taken from the site, unless otherwise approved by the ENGINEER. Demolished items shall not be used in backfill.

C. After removal of parts or all of masonry walls, slabs and like work which tie into the work or existing work, the point of junction shall be neatly repaired so as to leave only finished edges and surface exposed.

D. The jambs, sills, and heads of any windows, passageways, doors, or other openings cut into the work or existing work shall be dressed with new masonry, concrete, or metal to provide a smooth, finished appearance.

E. Where new anchoring materials, including bolts, nuts, hangers, welds, and reinforcing steel, are required to attach the work to the existing work they shall be included under this Section, except where specified elsewhere.

3.3 MECHANICAL REMOVALS

A. Mechanical removals shall consist of dismantling and removing of existing piping, pumps, motors, equipment and other appurtenances as specified, shown, or required for the completion of the Work. Mechanical removals shall include cutting, capping, and plugging as required, except that the cutting of existing piping for the purpose of making connections thereto will be included under Division 15, Mechanical.

B. Existing process, water, chemical, gas, fuel oil and other piping not required for the Work shall be removed where shown on the Drawings or where it will interfere with the Work. Piping not indicated to be removed or which does not interfere with the Work shall be removed to the nearest solid support, capped and left in place. Chemical and fuel lines and tanks shall be purged and made safe prior to removal or capping. Where piping that is to be removed passes through existing walls, it shall be cut off and properly capped on each side of the wall.

C. When underground piping is to be altered or removed, the remaining piping shall be properly capped. Abandoned underground piping shall be removed.

D. Waste and vent piping shall be removed to points shown. Pipe shall be plugged with cleanouts and plugs. Where vent stacks pass through an existing roof that is to remain, they shall be removed and the hole in the roof properly patched and made watertight.

E. Any changes to potable water piping and other plumbing and heating system work shall be made in conformance with all applicable codes and under the same requirements as other underground piping. All portions of the potable water system that have been altered or opened shall be pressure tested and disinfected in accordance with Section 15050, Piping Systems, and Section 15051, Buried Piping

Installation, and local codes. Other plumbing piping and heating piping shall be pressure tested only.

3.4 ELECTRICAL REMOVALS AND DEMOLITION

A. Electrical removals shall consist of the removal of existing transformers, distribution switchboards, control panels, motors, conduits and wires, poles and overhead wiring, panelboards, lighting fixtures, and miscellaneous electrical equipment all as shown on the Drawings, specified, or required to perform the Work.

B. All existing electrical equipment and fixtures to be removed shall be removed with such care as may be required to prevent unnecessary damage, to keep existing systems in operation and to keep the integrity of the grounding systems.

C. Motor Control Centers and Switchgear shall be removed or modified as shown on the Drawings. Motor Control Centers and Switchgear to be removed shall be disconnected and dismantled, and all components shall be disposed of off the site. Circuit breakers and other control equipment on modified Motor Control Centers and Switchgear that will no longer be used shall be removed, unless otherwise shown on the Drawings or specified. All new openings cut into the modified Motor Control Centers and Switchgear shall be cut square and dressed smooth to the dimensions required for the installation of the new equipment.

D. Motors shall be disconnected and removed where shown on the Drawings or specified. Motors not designated by the OWNER to be salvaged shall be removed from the site. Motors or other electrical gear designated for reuse shall be stored in an enclosed, temperature controlled environment.

E. Abandoned Exposed Conduit and Wire: Generally whenever a piece or groups of equipment are removed, all associated electrical power or control wiring which are no longer required shall be removed. The wire shall be removed back to the power source or control panel, ensuring that no portion of the wiring may remain energized. The conduit, unless otherwise indicated, shall be removed back to the nearest junction box or point of conduit embedment. Abandoned conduits or direct-burial cable concealed in floor or ceiling slabs, or in walls, shall be cut flush with the slab or wall at the point of entrance. The conduits shall be suitably plugged and the area repaired in a flush, smooth, approved manner. Exposed conduits and their supports shall be disassembled and removed from the site. Repair all areas of work to prevent rust spots on exposed surfaces.

F. Where shown on the Drawings or otherwise required, wiring in the underground duct or direct-burial cable system shall be removed. All such wiring shall be salvaged and stored as specified. Verify the function of all wiring via approved testing methods before disconnecting and removing it. Ducts which are not to be reused shall be plugged where they enter buildings and made watertight.

G. Existing panelboards where shown on the Drawings shall be removed and disposed of off the site. Where shown on the Drawings or specified, they shall be replaced with new panelboards at the same or adjacent locations. All cutting and patching necessary for the removal and replacement of panelboards shall be performed.

H. Existing lighting fixtures shall be removed or relocated as shown on the Drawings. Fixtures not relocated shall be removed from the site. Relocated fixtures shall be carefully removed from their present location and reinstalled where shown on the Drawings.

I. Existing wall switches, receptacles, starters and other miscellaneous electrical equipment shall be removed and disposed of off the site, as required. Care shall be taken in removing all equipment so as to minimize damage to architectural and structural members. Any damage incurred shall be repaired by CONTRACTOR to the satisfaction of the ENGINEER, at no additional cost to the OWNER.

3.5 ALTERATIONS AND CLOSURES

A. Alterations shall conform with the Contract Documents and the directions and approvals of the ENGINEER.

B. Where alterations require cutting or drilling into existing floors, walls, and roofs, the holes shall be repaired in a manner approved by the ENGINEER. Repair such openings with the same or matching materials as the existing floor, wall, or roof or as otherwise approved by the ENGINEER. All repairs shall be smoothly finished, unless otherwise approved by the ENGINEER.

C. Openings in existing concrete slabs, ceilings, masonry walls, floors and partitions shall be closed and sealed as shown on the Drawings or otherwise directed by the ENGINEER. The Work shall be keyed into the existing work in a manner approved by the ENGINEER. Reinforcing steel shall be welded to the existing reinforcing. Welding shall conform to AWS D12.1, Reinforcing Steel Welding Code. In general, use the same or matching materials as the existing adjacent surface. The finished closure shall be a smooth, tight, sealed, permanent closure acceptable to the ENGINEER.

3.6 CLEANUP

A. Remove from the site all debris resulting from the demolition operations as it accumulates. Upon completion of the Work, all materials, equipment, waste, and debris of every sort shall be removed and premises shall be left, clean, neat and orderly. Comply with requirements of Section 02315, Earthwork, Excavation and Backfill.

3.7 DEMOLITION ITEMS

A. The demolition items shall include, but are not limited to the descriptions in the following paragraphs. Further information is provided in demolition Drawings. In addition to the demolition Drawings, demolition items are also shown on: process, civil, structural, mechanical, electrical, and instrumentation Drawings.

B. Yard Piping:
   1. The CONTRACTOR shall remove and relocate existing 8-inch POT, 2-inch DRAIN, 4-inch NPW, and 54-inch EFF piping as indicated in the Contract Documents.

C. Site and Electrical:
   1. Demolish and dispose of existing pavement, curb and gutter, structures and landscaping as indicated in the Contract Documents.
   2. Relocate or remove and adjust light poles, electrical duct banks and wiring required for grade adjustments as indicated in the Contract Documents.
   3. The CONTRACTOR shall remove existing yard piping and as indicated in the Contract Documents.
   4. Manholes shall be completely removed and disposed off-site. Sewer pipes and wet utilities shall be abandoned or removed, as specified in the plans or directed by the ENGINEER. Pipes that are to be abandoned shall be plugged or grout filled. Fill shall be placed and compacted to match surrounding grade per Section 02315, Earthwork, Excavation and Backfill.
   5. Items to be salvaged and reused include, but are not limited to, plug valves, gate valves, flow meters, and light poles.
   6. Irrigation system and components may require removal to allow new construction. Any irrigation system removal must be restored to original operating condition by CONTRACTOR. CONTRACTOR is responsible to ensure all landscaping receives irrigation during periods of irrigation system removal.

++ END OF SECTION ++

SECTION 02100

SITE PREPARATION

PART 1 - GENERAL

1.1 SUMMARY

A. Prepare the construction site for new construction.

1.2 SECTION INCLUDES

A. Removal of existing structures.

B. Protection of certain existing trees and vegetation.

C. Clearing and grubbing.

D. Removing above grade improvements.

E. Removing below grade improvements (including stumps).

F. Installing and maintaining barricades and warning signs.

G. All other miscellaneous items of Work required for completing the site preparation.

1.3 RELATED SECTIONS

A. Section 02050, Demolitions.

B. Section 02315, Earthwork, Excavation, and Backfill.

1.4 PROJECT CONDITIONS

A. Traffic: Conduct site-clearing operations to ensure minimum interference with roads, streets, walks, and other adjacent occupied or used facilities. Do not close or obstruct streets, walks, or other occupied or used facilities without permission from authorities having jurisdiction.

B. Protection of Existing Improvements: Provide protection as necessary to prevent damage to existing improvements indicated to remain in place.
   1. Protect improvements on adjoining properties and OWNER'S property.
   2. Restore damaged improvements to their original condition, as acceptable to OWNER.

C. Protection of Existing Trees and Vegetation:

1. Existing vegetation in the field not scheduled for removal shall be undisturbed by the CONTRACTOR. The CONTRACTOR shall not remove from the site any plants, unless specifically approved by the ENGINEER.
2. Protect existing trees and vegetation indicated to remain against unnecessary cutting, breaking, or skinning of roots, skinning or bruising of bark, smothering of trees by stockpiling construction materials, or excavated materials within drip line, excess foot or vehicular traffic or parking of vehicles within the drip line. Prior to initiating site clearing activities, the CONTRACTOR shall mark the limits of the disturbance areas either by placing lime, flags, or survey stakes at the limits shown on the Plans.
3. Do not destroy vegetation which may be naturally located in the periphery of proposed disturbed areas (within a zone ±5 foot). The ENGINEER shall be notified if existing plants are located within the fringes of the construction limits. The ENGINEER shall issue instructions at that time.
4. Adjustments may be made in the limits of construction to protect the affected plants based on a field review of the staked limits. The adjusted construction limits shall be considered the permanent construction limits for the duration of the Project. If the ENGINEER recommends that construction limits be adjusted to preserve existing plants, the CONTRACTOR, at his own option, may elect to clear the subject vegetation and re-vegetate with like-kind size and species as required herein at no additional cost to the OWNER. The CONTRACTOR shall be entirely responsible for removal, storage, and replanting of such vegetation.
5. During the Course of the Work the CONTRACTOR shall:
    a. Water trees, shrubs, and other vegetation to remain within limits of Contract Work as required to maintain their health during the course of construction operations. Other requirements for maintaining the existing vegetation are specified herein.
    b. Provide protection for roots over 1-1/2-inches in diameter that are cut during construction operations. Temporarily cover exposed roots with wet burlap to prevent the roots from drying out; cover with earth as soon as possible.
    c. Repair or replace trees and vegetation indicated to remain that are damaged by construction operations in a manner acceptable to the ENGINEER.
    d. Trees to be protected in place shall not be pruned unless limbs are damaged, or at the direction of the ENGINEER. Employ a licensed arborist to repair damaged trees and shrubs. Replace trees that cannot be repaired and restored to full-growth status, as determined by the arborist.
    e. Provide a temporary construction fence/barrier to protect trees and vegetation at the limits reviewed and approved by the ENGINEER. The barrier shall be installed and remain in place for the duration of the project or as directed by the ENGINEER.

PART 2 - PRODUCTS

2.1 MATERIALS

A. Fencing: Any fencing removed as obstructions shall be restored to match existing.

B. Barricades, warning signs, and related equipment shall be placed as required.

C. Tree Protection Fence/Barrier: Shall be a commercially available product acceptable to the ENGINEER for its intended purpose. The barrier shall be similar to a nylon woven material or woven wire fence such as TENAX Nordic Snow Fence, or approved equal, with approved stakes approximately 36-inches in height. Submit material sample and Shop Drawings for barrier installation to the ENGINEER for approval prior to use.

PART 3 - EXECUTION

3.1 PREPARATION

A. Site Clearing:
   1. General: Remove trees, shrubs, grass, and other vegetation, improvements or obstructions, as required, to permit installation of new construction. Remove similar items elsewhere on-site or premises as specifically indicated. Removal includes digging out and off-site disposal of stumps and roots.
      a. Cut minor roots and branches of trees indicated to remain in a clean and careful manner where such roots and branches obstruct installation of new construction.
   2. Clearing and Grubbing: Within the limits of Work, clear site of trees, shrubs, and other material, except for those indicated to be left standing.
      a. Completely remove stumps, roots, and other debris protruding through the ground surface. Stump removal and backfilling of holes is required for trees indicated on the Plans to be removed.
      b. Use only hand methods for grubbing inside drip line of trees indicated to remain.
      c. Fill depressions caused by clearing and grubbing operations with satisfactory soil material, unless further excavation or earthwork is indicated.
      d. Place fill material in horizontal layers not exceeding 6-inches loose depth and thoroughly compact each layer to a density equal to adjacent original ground.
      e. No cleared or grubbed material may be used in backfills or structural embankments. Comply with requirements of Section 02315, Earthwork, Excavation, and Backfill.
   3. Removal of Improvements: Remove existing above grade and below grade improvements as indicated and necessary to facilitate new construction.

4. Disposal of Waste Material:
    a. Burning on OWNER'S Property: Burning is not permitted on OWNER'S property.
    b. Removal from OWNER'S Property: Remove waste materials from OWNER'S property at no additional cost to the Project.
5. Insofar as is consistent with customary construction practices, all operations shall be performed by such method as shall result in the minimum damage to materials and construction to remain intact and in use. CONTRACTOR shall provide temporary supports and shoring as required to protect existing walls, equipment, piping, electrical conduits, etc., during periods of removal work and new construction under this Contract.
6. Designated existing structures shall be removed complete with foundations, slabs, walks, and miscellaneous items. Existing foundations outside lines of new construction shall be removed to a minimum depth of 3 feet below finished subgrade elevation and foundations within area of new construction shall be removed completely, unless otherwise shown on the Drawings. All trash, rubble, and debris shall be cleaned up, transported, and disposed of at off-site locations. Pits and other depressions shall be cleaned of all trash and decayable materials prior to backfilling, then backfilled and compacted in such a manner that no future settlement will occur.
7. All miscellaneous items not specifically mentioned or designated on the Drawings as removal items, but required for the completion of the Work, shall be removed. All such items removed shall be hauled from the site.

B. Barricades and Warning Signs:
    1. Construction sites shall be properly barricaded with appropriate warning signs affixed to prevent unauthorized access to the construction site.

3.2 TOPSOIL REMOVAL

A. Topsoil is defined as friable clay loam surface soil found in a depth of not less than 4-inches. Topsoil shall be substantially free of subsoil, clay lumps, stones, and other objects over 2-inches in diameter and without weeds, roots, and other objectionable material.

B. Strip topsoil which is satisfactory to whatever depths are encountered, and in such manner as to prevent intermingling with the underlying subsoil or other objectionable material. Remove heavy growths of grass from areas before stripping.
    1. Where trees are shown on the Drawings or as directed by the ENGINEER to be left standing, stop topsoil stripping a sufficient distance from such trees to prevent damage to the main root system.

C. Stockpile topsoil in storage piles in areas shown on the Drawings or where otherwise approved by ENGINEER. Construct storage piles to freely drain surface water.

Cover storage piles, if required, to prevent windblown dust. Topsoil in excess of quantity required shall remain property of OWNER.

D. Dispose of excess topsoil as waste material off-site.

++ END OF SECTION ++

SECTION 02150

SHORING

PART 1 - GENERAL

1.1 DESCRIPTION

A. Provide shoring and bracing for excavations and trenching, complete.

B. Work in this Section:
   1. Provide required shoring and bracing for the excavations and trenching operations to be performed.
   2. Soil stabilizer.

1.2 QUALITY ASSURANCE

A. Requirements of Regulatory Agencies: Conform to governing Federal, State, and local Construction Safety Orders; secure and pay for required permits. For off-site installation of shoring and related items, conform to requirements of the public agencies having jurisdiction; obtain and pay for required permits and inspections.

B. Design of Shoring: CONTRACTOR shall retain services of a licensed Civil Engineer in the State of Arizona to design and prepare calculations for shoring methods, bracing or tie back anchoring, wall supporting systems, and other systems to be used for protection of adjacent existing structures and improvements and for earth banks; special consideration and provisions for protection of existing columns, piers, and other items to remain shall be addressed. The CONTRACTOR shall submit the shoring drawings and calculations to the ENGINEER. The CONTRACTOR shall obtain Building Department approval prior to starting construction involving shoring and pay all fees and charges. Building Department approved Drawings and calculations are for record purposes only and not for review or approval.

1.3 JOB CONDITIONS

A. Data: Drawings, boring logs, geotechnical or foundation investigation reports and like information, not included in the Contract Documents but made available to CONTRACTOR by ENGINEER or OWNER, are for information only and the ENGINEER and OWNER assume no responsibility for any conclusions CONTRACTOR may draw from such information. CONTRACTOR shall investigate and determine existing soils and site conditions under which CONTRACTOR will operate in performing the Work.

B. Protection: Provide and maintain protection to retain earth banks and to protect adjoining grades and structures from caving, sliding, erosion, or other damage. Provide suitable protection against bodily injury. Construct bulkheads and shoring to the requirements of State and local codes and regulations. Shore vertical banks or slope banks back as required for stability and safety. Erect temporary barricades placed at least 5 feet away from top of slopes and as required by shoring design, and provide temporary berms as required to prevent slope erosion from water.

PART 2 - PRODUCTS

2.1 MATERIALS

A. Sand: Clean sand from approved source, free from approved source, free from vegetable matter, rock, and other materials deleterious to the intended use.

B. Soil Stabilizer: The CONTRACTOR shall submit to the ENGINEER as information only, written documentation pertaining to the mix and application of sodium silicate grout, or approved equal, injected to stabilize the granular soil cut face to be excavated adjacent to the existing foundations and paving. The grout mix shall meet the manufacturer's recommendations. The purpose of this grouting is to prevent undermining and loss of ground adjacent to and/or under foundations and existing paving.

PART 3 - EXECUTION

3.1 SHORING

A. Conform to the approved shoring drawings and calculations. Maintain 5 foot wide berm at top of slopes. Frequently inspect installed shoring and bracing for deflections during construction.
   1. Tie-Back Anchors: Lag, drill, grout, preload and/or test tie-back anchors or bracing, and furnish required testing equipment as recommended and approved by the ENGINEER. Perform preloading and testing under observation of the ENGINEER.
   2. Removal: Remove shoring, sheeting, or sheet piling, and detention tieback anchors as required, unless otherwise indicated or approved. Fill voids left by removals with compacted sand or pea gravel backfill.

3.2 SOIL STABILIZATION

A. The CONTRACTOR shall take all precautions necessary to prevent any soil and pavement failure before, during, and after the grouting operation. Any additional differential settlement of pavements or foundations, or any differential settlement

causing cracks, offsetting joints or reduction in slope in any utilities, shall result in the CONTRACTOR replacing the damaged pavement and utilities to MAG Specifications at the CONTRACTOR'S expense.

B. The sodium silicate grouting must start at a maximum depth equal or greater than the excavation depth. The lateral extent to the grout curtain shall be determined by the CONTRACTOR to maintain the open cut face. Grouting must begin at this depth and, by means of pumping, should continue upward until the surface, or an obstruction, such as a slab or grade beam, is encountered. The grouting shall not be relied on to provide worker safety in trenches according with all OSHA and local agencies. Additional shoring or other measures may be required to provide for this safety.

++ END OF SECTION ++

SECTION 02315

EARTHWORK, EXCAVATION, AND BACKFILL

PART 1 - GENERAL

1.1 DESCRIPTION

A. Scope:
   1. Provide all labor, materials, equipment, and incidentals required to perform all excavating, backfilling, filling and grading, and disposing of earth materials as shown on the Drawings, specified, and required for construction of retaining walls, manholes, vaults, structure foundations, underground duct banks, electrical manholes and handholes, and other structures and facilities required to complete the Work in every respect.
   2. All necessary preparation of subgrade for slabs, foundations, and pavements is included.
   3. All temporary means required to prevent discharge of sediment to water courses from dewatering systems or erosion are included.
   4. On-site excavated material will be classified for use as backfill material. Excavation materials include all materials regardless of type, character, composition, moisture, or condition thereof.
   5. Perform all earthwork as specified in this Section.

B. Geotechnical Engineering Report:
   1. A draft geotechnical engineering report has been prepared by Ricker • Atkinson • McBee • Morman & Associates, Inc., dated July 21,2020, (RAMM Project No. G27733) for the Airport Water Reclamation Facility Expansion. The draft report is available for review from the OWNER.
   2. In the event of a conflict between the Specifications and the geotechnical report, the more restrictive requirement shall govern, unless specifically noted in this Section.

1.2 QUALITY ASSURANCE

A. Testing Services:
   1. General: Testing of materials, testing for moisture content during placement and compaction of fill materials, and of compaction requirements for compliance with technical requirements of the Specifications shall be performed by a testing laboratory as designated in Section 01451, Testing Laboratory Services Furnished by OWNER.
   2. OWNER'S Testing Agency Scope:
      a. Test CONTRACTOR'S proposed materials in the laboratory and/or field for compliance with the Specifications.
      b. Perform field moisture content and density tests to assure that the specified compaction of backfill materials has been obtained.

c. Report all test results to the ENGINEER and CONTRACTOR.

3. Authority and Duties of OWNER'S Testing Agency: Technicians representing the testing laboratory shall inspect the materials in the field and perform tests, and shall report their findings to the ENGINEER and CONTRACTOR. When the materials furnished or Work performed fails to fulfill Specification requirements, the technician will direct the attention of the ENGINEER and CONTRACTOR to such failure.
   a. The technician shall not act as foreman or perform other duties for CONTRACTOR. Work will be checked as it progresses, but failure to detect any defective Work or materials shall not in any way prevent later rejection when such defect is discovered, nor shall it obligate the ENGINEER for final acceptance. Technicians are not authorized to revoke, alter, relax, enlarge, or release any requirements of the Contract Documents, nor to approve or accept any portion of the Work.
4. Responsibilities and Duties of CONTRACTOR:
   a. The use of testing services shall in no way relieve CONTRACTOR of the responsibility to furnish materials and construction in full compliance with the Contract Documents.
   b. To facilitate testing services:
      1) Secure and deliver to the ENGINEER or to the testing agency, without cost, preliminary representative samples of the materials he proposes to use and which are required to be tested.
      2) Furnish such casual labor as is necessary to obtain and handle samples at the Work site or at other sources of material.
      3) Advise the OWNER'S testing agency at least two days in advance of any backfill operations to allow for completion of quality tests and for the assignment of personnel.
   c. Owner's testing service shall inspect and approve subgrades and fill layers before further construction work is performed thereon.
   d. Responsibility belongs to CONTRACTOR to accomplish the specified compaction for backfill, fill, and other earthwork, and to control his operations by confirmation tests to verify and confirm that CONTRACTOR has complied, and is complying at all times, with the requirements of these Specifications concerning compaction, control, and testing.
   e. The frequency of testing shall be not less than as follows; each test location for trenches shall include tests for each layer, type, or class of backfill from bedding to finish grade.
      1) Engineered backfill beneath slabs, structures, foundations, and pavements:
         a) At subgrade and at each compacted fill and backfill layer, perform at least one field in-place density test for every 1,000 sq. ft. or less of paved area or building slab, but in no case fewer than three tests.
      2) Backfill against structures:

a) In each compacted backfill layer, perform at least one field in-place density test for each 100 feet or less of wall length, but no fewer than two tests along a wall face.

3) Trench backfill:

a) In each compacted backfill layer, perform at least one field in-place density test for each 150 feet or less of trench, but no fewer than two tests.

f. Copies of the test reports shall be submitted promptly to the ENGINEER. CONTRACTOR'S tests to be performed by a soils testing laboratory acceptable to the ENGINEER.

g. Demonstrate the adequacy of compaction equipment and procedures before exceeding any of the following amounts of earthwork quantities:

1) 100 linear feet of trench backfill.
2) 10 cubic yards of structural backfill.
3) 100 cubic yards of embankment work.
4) 50 cubic yards of base material.

h. Until the specified degree of compaction on the previously specified amounts of earthwork is achieved, no additional earthwork of the same kind shall be performed.

i. Periodic compliance tests will be made by the ENGINEER to verify that compaction is conforming to the requirements previously specified. CONTRACTOR shall remove the overburden above the level at which the ENGINEER wishes to test, and shall backfill and re-compact the excavation after the test is complete.

j. If compaction fails to conform to the specified requirements, CONTRACTOR shall remove and replace the backfill at proper density or bring the density up to specified level by other means acceptable to the ENGINEER. Subsequent tests required to confirm and verify that the reconstructed backfill has been brought up to specified density shall be paid by CONTRACTOR. CONTRACTOR'S confirmation tests to be performed in a manner acceptable to the ENGINEER. Frequency of confirmation tests for remedial work shall be double that amount specified for initial confirmation tests.

B. Permits and Regulations:

1. Obtain all necessary permits for Work in roads, rights-of-way, railroads, etc. Also, obtain permits as required by local, State, and Federal agencies for discharging water from excavations.
2. Perform excavation work in compliance with applicable requirements of governing authorities having jurisdiction.

C. Reference Standards: Comply with applicable provisions and recommendations of the following, except as otherwise shown or specified.

1. ASTM A36, Specification for Structural Steel.
2. ASTM A328, Specification for Steel Sheet Piling.
3. ASTM D422, Method for Particle-Size Analysis of Soils.

4. ASTM D698, Test Method for Laboratory Compaction Characteristics of Soil.
5. ASTM D1556, Test Method for Density and Unit Weight of Soil in Place by the Sand Cone Method.
6. ASTM D2166, Test Method for Unconfined Compressive Strength of Cohesive Soils.
7. ASTM D2922, Test Methods for Density of Soil and Soil-Aggregate in Place by Nuclear Methods (Shallow Depth).
8. ASTM D4318, Test Method for Liquid Limit, Plastic Limit, and Plasticity Index of Soils.
9. AISC Specifications for the Design, Fabrication, and Erection of Structural Steel for Buildings.
10. OSHA Standard, Title 29, Code of Federal Regulations, Part 1926, Section 650 (Subpart P - Excavations).
11. Uniform Building Code, as supplemented by the City of Chandler.
12. Uniform Standard Specifications for Public Work Construction by the Maricopa Association of Governments (MAG) as supplemented by the City of Chandler; Section 206, Structure Excavation and Backfill; Section 604, Placement of Controlled Low Strength Material; Section 702, Base Materials; Section 725, Portland Cement Concrete; Section 728, Controlled Low Strength Material. Where there is a conflict between MAG Standard Specifications as supplemented by the City of Chandler and this Specification, provisions of this Specification shall govern.

1.3 SUBMITTALS

A. Shop Drawings: Submit for approval the following:
   1. Excavation and Backfill Submittals:
      a. Excavation Plan: Prior to start of excavation operations, a written plan shall be submitted to demonstrate compliance with OSHA Standard 29 CFR Part 1926.650. As a minimum, excavation plan shall include:
         1) Name of competent person.
         2) Excavation method(s) or protective system(s) to be used.
         3) Copies of "manufacturer's data" or other tabulated data if protective system(s) are designed on the basis of such data.
         4) Excavation and backfill requirements detailing sheeting and bracing, or other protective system(s), dewatering systems, cofferdams, and underpinning.
         5) Shop Drawings shall be prepared by a Registered Professional Engineer licensed in the State of Arizona, recognized as an expert in the specialty involved. Drawings shall be submitted to ENGINEER for record purposes only. Calculations shall not be submitted. Drawing submittals will not be checked and will not imply approval by ENGINEER of the Work involved. Sole responsibility for designing, installing, operating, and maintaining whatever system is necessary to satisfactorily accomplish all necessary sheeting, bracing, protection, underpinning, and dewatering belongs to CONTRACTOR.

6) Samples of all materials, including select backfill, general backfill, crushed stone, and sand shall be submitted to the ENGINEER and the testing service. Samples of the proposed material shall be submitted at least 14 days in advance of its anticipated use.

2. Test Reports:
   a. Testing laboratory shall submit copies of the following reports directly to ENGINEER, with copy to CONTRACTOR:
      1) Tests on borrow material.
      2) Tests on footing subgrade.
      3) Field density tests.
      4) Optimum moisture - maximum density curve for each soil used for trench and structural backfill, embankment and base material.
      5) Reports of observations for conformance of borrow material to the Project Geotechnical Report.

B. Shop Drawings: Submit for approval the following:
   1. A copy of this specification section, with addendum updates included, and all referenced and applicable sections, with addendum updates included, with each paragraph check-marked to indicate specification compliance or marked to indicate requested deviations from specification requirements. Check marks (✓) shall denote full compliance with a paragraph as a whole. If deviations from the specifications are indicated, and therefore requested by the CONTRACTOR, each deviation shall be underlined and denoted by a number in the margin to the right of the identified paragraph, referenced to a detailed written explanation of the reasons for requesting the deviation. The ENGINEER shall be the final authority for determining acceptability of requested deviations. The CONTRACTOR shall furnish equipment and/or services as specified if an exception and/or deviation is rejected. The remaining portions of the paragraph not underlined will signify compliance on the part of the CONTRACTOR with the specifications. Failure to include a copy of the marked-up specification sections, along with justification(s) for any requested deviations to the specification requirements, with the submittal shall be sufficient cause for rejection of the entire submittal with no further consideration.
   2. The CONTRACTOR shall submit the preventive maintenance information package as part of the shop drawing submittal package to the ENGINEER for review and approval. **SHOP DRAWING SUBMITTAL PACKAGE WILL NOT BE APPROVED WITHOUT ACCEPTANCE OF PREVENTIVE MAINTENANCE INFORMATION.**

1.4 JOB CONDITIONS

A. Subsurface Information: Refer to Draft Geotechnical Engineering Report prepared by Ricker • Atkinson • McBee • Morman & Associates, Inc., dated February 3, 2022, (RAMM Project No. G27733) for available data on subsurface conditions. The data is not intended as a representation or warranty of continuity of conditions between soil borings, nor of groundwater levels at dates and times other than date and time

when measured. OWNER will not be responsible for interpretations or conclusions by CONTRACTOR. Data is solely made available for the convenience of CONTRACTOR.

1. Additional test borings and other exploratory operations may be made by CONTRACTOR, at no additional cost to OWNER.
2. Refer to and comply with the requirements of Section 02050, Demolitions.

B. Existing Structures: The Drawings show certain surface and underground structures adjacent to the Work. This information has been obtained from existing records. It is not guaranteed to be correct or complete and is shown on the Drawings for the convenience of CONTRACTOR. Explore ahead of the required excavation to determine the exact location of all existing structures. Structures shall be supported and protected from damage by CONTRACTOR. If they are broken or damaged, restore them immediately at no additional cost to the OWNER.

C. Existing Utilities: Locate existing underground utilities in the areas of the Work. If utilities are to remain in place, provide adequate means of protection during all operations.

1. Should uncharted or incorrectly charted piping or other utilities be encountered during excavation, consult piping or utility owner and ENGINEER immediately for directions as to procedure. Cooperate with OWNER and utility owner in keeping services and facilities in operation. Repair damaged utilities to satisfaction of utility owner.
2. In general, small diameter service lines are not shown on the Drawings. CONTRACTOR is to protect and repair damaged utilities to the satisfaction of the OWNER.
3. Do not interrupt existing utilities serving facilities occupied and used by OWNER or others, except when permitted in writing by ENGINEER and then only after acceptable temporary utility services have been provided.
4. Demolish and completely remove from site existing underground utilities indicated to be removed. Coordinate with utility companies for shut-off of services if lines are active.

D. Use of Explosives:

1. The use of explosives will not be permitted.

E. Protection of Persons and Property: Barricade open excavations occurring as part of the Work and post with warning lights. Operate warning lights during hours from dusk to dawn each day and as otherwise required.

1. Protect structures, utilities, sidewalks, pavements, and other facilities from damage caused by settlement, lateral movement, undermining, washout, and other hazards created by earthwork operations.
2. Maintain security fence around all excavation, fill, and stockpile areas to prevent public access. Site security fence fulfills this requirement.

F. Dust Control: Conduct all operations meeting the requirements specified in Section 01414, Earthmoving and Dust Control.

G. Roadways and Walks: Unless otherwise approved by ENGINEER, excavated material and materials of construction shall be so deposited, and the Work shall be so conducted as to leave open and free for pedestrian traffic all crosswalks, and for vehicular traffic a roadway not less than 10 feet in width. All hydrants, valves, fire alarm boxes, letter boxes, and other facilities which may require access during construction shall be kept accessible for use. During the progress of the Work, maintain such crosswalks, sidewalks, and roadways in satisfactory condition, and the Work shall at all times be so conducted as to cause a minimum of inconvenience to public travel and to permit safe and convenient access to private and public property along the line of the Work.

PART 2 - PRODUCTS

2.1 SOIL MATERIALS

A. Fill and Backfill Materials:
   1. Materials acceptable for use as fill and backfill in embankments, against walls, foundations, underground duct banks, and other structures meet the following requirements:
      a. Imported materials shall meet the following requirements:
         1) Shall contain no organic matter, debris, or rubble.
         2) Shall contain no material greater than 4-inches in size.
         3) Shall have a minimum of 30% passing the No. 4 sieve.
         4) The maximum expansion shall be 1.5% as performed on a sample remolded to approximately 95% of the maximum dry density as determined in accordance with ASTM D698 at 2% below optimum moisture content under a 100 psf surcharge pressure.
      b. Site soils used as fill and backfill shall meet the following requirements:
         1) Shall contain no organic matter, debris, or rubble.
         2) Shall contain no rocks or fragments greater than 4-inches in size.
         3) Granular and clayey site soils may be used as fill and backfill.
   2. All materials for use as fill and backfill material shall be tested by the laboratory and approved by the ENGINEER.
   3. If on-site material is unsuitable as determined by the ENGINEER, engineered backfill or approved off-site fill shall be used.
   4. Fill adjacent to structures is classified as backfill to a distance measured horizontally from the structure that is equal to the depth from the finished grade. Outside these limits the fill is classified as embankments, unless otherwise specified.
   5. Refer to and comply with the requirements of Section 02319, Riprap.

B. Engineered Fill:

1. Engineered fill for use beneath structures, foundations, concrete slabs, and as a base for Portland cement concrete pavements and asphaltic pavements shall be site soils and/or imported soils as described in the Geotechnical Report.

C. Pipe Bedding:
   1. All pipe bedding material shall conform to the requirements below:
      a. Bedding material shall consist of subbase or base materials with 100% passing a 1-inch sieve and not more than 8% passing a No. 200 sieve.
         1) If on-site material can be used as bedding material, the CONTRACTOR shall take necessary steps to separate the suitable bedding material from the sandy clay and sandy silt found on-site. The bedding material must meet all requirements of this Specifications Document and MAG Standard Specification Section 601.
         2) If on-site material does not meet the bedding material requirements, the CONTRACTOR shall supply the specified bedding material at no additional cost to the OWNER.
      b. Shall be free of broken concrete, broken pavement, wood, or other deleterious material.
      c. Open graded rock shall not be used.
      d. Water consolidation shall not be used.
      e. Fill shall be placed and compacted in 4-inch lifts below the springline. Succeeding lifts shall not exceed 8-inches loose material.
      f. Extreme care shall be taken to prevent damage to or movement of the conduit by the compaction equipment.
   2. Place and compact bedding course on rock and other unyielding bearing surfaces and to fill unauthorized excavations. Shape bedding course to provide continuous support for bells, joints, and barrels of pipes and for joints, fittings, and bodies of conduits.
   3. Backfill below, around, and above all pipes shall be compacted per Section 3.9.E.1.
   4. All buried piping shall be bedded 12-inches above the top of the pipe in compacted granular material as stated above, with a minimum of 4-inches of compacted bedding material below the pipe. Backfill below, around, and above all pipes shall be compacted per Section 3.9.E.1.
   5. Two-sack MAG CLSM (Section 728) backfill trenches that carry below or pass under footings and that are excavated within 18-inches of footings. Place CLSM to level of bottom of footings.
   6. Provide 4-inch thick concrete base slab support for piping or conduit less than 2 feet 6-inches below surface of roadways. After installation and testing, completely encase piping or conduit in a minimum of 4-inches of concrete before backfilling or placing roadway subbase.
   7. Coordinate backfilling with utilities testing.
   8. Fill voids with approved backfill materials as shoring and bracing, and sheeting is removed.
   9. Place and compact final backfill of satisfactory soil material to final subgrade.

10. Install warning tape directly above utilities 12-inches below finished grade, except 6-inches below subgrade under pavements and slabs.

D. Drainage Fill:
   1. Washed, uniformly graded mixture of crushed stone, or crushed or uncrushed gravel, with 100% passing a 1-1/2-inch sieve and not more than 5% passing a No. 4 sieve. Crushed stone or gravel shall be crushed rock or gravel conforming to the requirements of Section 02318, Crushed Stone, Gravel and Decomposed Granite.

E. Backfill Beneath Structures and Foundations:
   1. All pipes shall be concrete encased.
   2. Structures shall be placed on engineered fill.
   3. The void space beneath structures which have foundations at different levels shall be backfilled with CLSM. See Structural Plans for CLSM mix requirements.

PART 3 - EXECUTION

3.1 INSPECTION

A. Provide ENGINEER with sufficient notice and with means to examine the areas and conditions under which excavating, filling, and grading are to be performed. ENGINEER will notify CONTRACTOR if conditions are found that may be detrimental to the proper and timely completion of the Work. Do not proceed with the Work until unsatisfactory conditions have been corrected in an acceptable manner.

3.2 SITE PREPARATION

A. Clear all areas to be occupied by permanent construction or embankments of all existing fill zones, backfill zones, unstable soils, trees, brush, roots, stumps, logs, wood, and other materials and debris. Clean and strip subgrades for fills and embankments of all existing fill zones, backfill zones, unstable soils, vegetation, sod, topsoil, and organic matter. All waste materials shall be removed from site and properly disposed of by CONTRACTOR. Burning is not permitted. Refer to and comply with the requirements of Section 02100, Site Preparation.

3.3 TEST PITS

A. General:
   1. Excavate and backfill, in advance of the construction, test pits to determine conditions or location of the existing utilities and structures. Perform all Work required in connection with excavating, stockpiling, maintaining, sheeting, shoring, backfilling, and replacing pavement for the test pits.

a. Responsibility for the definite location of each existing facility involved within the area of his excavation for Work under this Contract belongs to CONTRACTOR. Care shall be exercised during such location work to avoid damaging and/or disrupting the affected facility. Responsibility for repairing, at his expense, damage to any structure, piping, or utility caused by his Work belongs to CONTRACTOR.

B. No separate payment will be made for test pits made by CONTRACTOR for his own use.

3.4 EXCAVATION

A. Perform all excavation required to complete the Work as shown on the Drawings, specified, and required. Excavations shall include earth, sand, clay, gravel, hardpan, boulders not requiring drilling and blasting for removal, decomposed rock, pavements, rubbish, and all other materials within the excavation limits, except rock.

B. Excavations for structures and underground duct banks shall be open excavations. Provide excavation protection system(s) required by ordinances, codes, law, and regulations to prevent injury to workmen and to prevent damage to new and existing structures or pipelines. Unless shown on the Drawings or specified otherwise, protection system(s) shall be utilized under the following conditions.
   1. All excavations shall be sloped, shielded, or shored and braced.
      a. Sloped excavations shall maintain slopes of 1.5 horizontal to 1.0 vertical or flatter for near surface soils (upper 35 feet of excavation). Steeper slopes will be considered on a case-by-case basis. CONTRACTOR shall provide design of steeper slopes, stamped by an AZ registered Professional Geotechnical Engineer.
      b. Sloped excavations deeper than 35 feet shall be designed and stamped AZ registered Professional Geotechnical Engineer. Design shall be provided by CONTRACTOR.
   2. Excavation protection system(s) shall be installed and maintained in accordance with Drawings submitted under Paragraph 1.3 of this Section.

C. Where the structure or duct bank is to be placed below the ground water table, well points, cofferdams, or other acceptable methods shall be used to permit construction of said structure under dry conditions. Dry conditions shall prevail until concrete has reached sufficient strength to withstand earth and hydrostatic loads. In addition, protect excavation from flooding until all walls and floor framing up to and including grade level floors are in place and backfilling has begun. Water level shall be maintained below top of backfill at all times.

D. Pumping of water from excavations shall be done in such a manner to prevent the carrying away of unsolidified concrete materials and to prevent damage to the existing subgrade.

E. The elevation of the bottom of footings shown on the Drawings shall be considered as approximate only and ENGINEER may order such changes in dimensions and elevations as may be required to secure a satisfactory footing. All structure excavations shall be hand-trimmed to permit the placing of full widths, and lengths of footings on horizontal beds. Rounded and undercut edges will not be permitted.

F. When excavations are made below the required grades, without the written order of ENGINEER, they shall be backfilled with engineered backfill, as directed by ENGINEER at the expense of CONTRACTOR.

G. Excavations shall be extended sufficiently on each side of structures, footings, etc., to permit setting of forms, installation of shoring or bracing, or the safe sloping of banks.

H. Subgrades for roadways and structures shall be firm, dense, and thoroughly compacted and consolidated; shall be free from mud, muck, and other soft or unsuitable materials; and shall remain firm and intact under all construction operations. Subgrades which are otherwise solid, but which become soft or mucky on top due to construction operations, shall be repaired to meet desired bearing capacity. The finished elevation of stabilized subgrades shall not be above subgrade elevations shown on the Drawings. All subgrades shall be retested to confirm bearing capacity prior to placing.

I. Material Storage: Stockpile satisfactory excavated materials in approved areas until required for backfill or fill. Place, grade, and shape stockpiles for proper drainage.
   1. Locate and retain soil materials at least 15 feet away from edge of excavations.
   2. Dispose of excess soil material and waste materials as specified hereinafter.
   3. Stockpiled excavated soils for use as subsequent fill shall be classified by laboratory as on-site granular or sandy clay soils. Use and placement of fill shall be performed as specified for each class.
   4. Excess soil from excavations shall be disposed of off-site. Disposal shall be in accordance with State and local regulatory requirements.

J. Where ENGINEER considers the existing material beneath the bedding material unsuitable, CONTRACTOR shall remove same and replace it with engineered backfill.

3.5 UNAUTHORIZED EXCAVATION

A. All excavation outside the lines and grades shown on the Drawings, and which is not approved by ENGINEER, together with the removal and disposal of the associated material, shall be at CONTRACTOR'S expense. Unauthorized excavations shall be filled and compacted with engineered backfill or CLSM by CONTRACTOR at his expense. Determination of the fill material type shall be made by the ENGINEER.

3.6 DRAINAGE, EROSION CONTROL, AND DEWATERING

A. Erosion Control:
   1. In general, the construction procedures outlined herein shall be implemented to assure minimum damage to the environment during construction. Take any and all additional measures required to conform to the requirements of applicable codes and regulations, and the requirements specified in Section 01412, Stormwater Pollution Prevention Plan and Permit.
   2. Whenever possible, access and temporary roads shall be located and constructed to avoid environmental damage. Provisions shall be made to regulate drainage, avoid erosion, and minimize damage to vegetation.
   3. Where areas must be cleared for storage of materials or temporary structures, provisions shall be made for regulating drainage and controlling erosion, subject to the ENGINEER'S approval.
   4. Temporary measures shall be applied to control erosion and to minimize the silting of the existing waterways and natural ponding areas. Such measures shall include, but are not limited to, the use of berms, baled straw silt barriers, gravel or crushed stone, mulch, slope drains, and other methods. These temporary measures shall be applied to erodible materials exposed by any activities associated with the construction of this Work.
      a. Special care shall be taken to eliminate depressions that could serve as mosquito pools.
      b. Temporary measures shall be coordinated with the construction of permanent drainage facilities and other Work to the extent practicable to assure economical, effective, and continuous erosion and silt control.
      c. Provide special care in areas with steep slopes. Disturbance of vegetation shall be kept to a minimum to maintain stability.
   5. Remove only those shrubs and grasses that must be removed for construction. Protect the remainder to preserve their erosion-control value.
   6. Install erosion and sediment control practices where shown on the Drawings and according to applicable standards, codes, and Specifications. The practices shall be maintained in effective working condition during construction and until the drainage area has been permanently stabilized.
   7. Mulching is to be used for temporary stabilization.
      a. Suitable Materials for Mulching:
         1) Unrotted straw or salt hay: 1-1/2 to 2 tons/acre.
         2) Asphalt emulsion or cutback asphalt: 600 to 1,200 gal./acre.
         3) Wood-fiber or paper-fiber (hydroseeding): 1,500 lbs./acre.
         4) Mulch netting (paper, jute, excelsior, cotton, or plastic).
      b. Straw or salt hay mulches should be immediately anchored using peg and twine netting or a mulch anchoring tool or liquid mulch binders.
   8. After stabilization, remove all straw bale dikes, debris, etc., from the site.
   9. In the event of any temporary work stoppage, take steps to prevent any temporary or environmental damage to the area undergoing construction.
   10. In the event CONTRACTOR repeatedly fails to satisfactorily control erosion and siltation, the OWNER reserves the right to employ outside assistance or to

use its own forces to provide the corrective measures indicated. The cost of such work, plus engineering costs, will be deducted from monies due CONTRACTOR.

11. Prevent blowing and movement of dust from exposed soil surfaces and access roads to reduce on- and off-site damage and health hazards. Control may be achieved by irrigation in which the site shall be sprinkled with water until the surface is moist. The process shall be repeated as needed.

B. Dewatering:
   1. Prevent surface water and subsurface or groundwater from entering excavation, from ponding on prepared subgrades, and from flooding Project site and surrounding area.
   2. Protect subgrades and foundation soils from softening and damage by rain or water accumulation.

C. Disposal of Water Removed by Dewatering System:
   1. CONTRACTOR'S dewatering system will discharge to retention basins in accordance with State and Federal regulations.
   2. Dispose of all water removed from the excavation in such a manner as not to endanger public health, property, or any portion of the Work under construction or completed.
   3. Dispose of water in such a manner as to cause no inconvenience to OWNER, ENGINEER, or others involved in Work about the site.
   4. Convey water from the construction site in a closed conduit. Do not use trench excavations as temporary drainage ditches.
   5. Meter the quantity of water discharged in a manner acceptable to the Arizona Department of Water Resources.
   6. The discharged water from the dewatering system shall be purchased from the Arizona Department of Water Resources at the prevailing rate.

3.7 SHEETING, SHORING, AND BRACING FOR STRUCTURE EXCAVATIONS

A. General:
   1. Used material shall be in good condition, not damaged or excessively pitted. All steel or wood sheeting designated to remain in place shall be new. New or used sheeting may be used for temporary work.
   2. All timber used for breast boards (lagging) shall be new or used, meeting the requirements for Douglas Fir Dense Construction grade with a bending strength not less than 1,500 psi or Southern Pine No. 2 Dense.
   3. All steel work for sheeting, shoring, bracing, cofferdams, etc., shall be designed in accordance with the provisions of the "Specifications for the Design, Fabrication and Erection of Structural Steel for Buildings", of the AISC, except that field welding will be permitted.
   4. Steel sheet piling shall be manufactured from steel conforming to ASTM A328. Steel for soldier piles, wales, and braces shall be new or used and shall conform to ASTM A36.

5. Maintain shoring and bracing in excavations regardless of time period excavations will be open. Carry down shoring and bracing as excavation progresses.
6. Unless otherwise shown on the Drawings, specified, or ordered, all materials used for temporary construction shall be removed when Work is completed. Such removal shall be made in a manner not injurious to the structure or its appearance or to adjacent Work.
7. Provide permanent steel sheet piling or pressure creosoted timber sheet piling wherever subsequent removal of sheet piling might permit lateral movement of soil under adjacent structures. Cut off tops as required, but at least 3 feet below grade, and leave permanently in place.
8. The clearances and types of the temporary structures, insofar as they affect the character of the finished Work, and the design of sheeting to be left in place, will be subject to the approval of ENGINEER; but, responsibility for the adequacy of all sheeting, shoring, bracing, coffer-damming, etc., belongs to CONTRACTOR.
9. Safe and satisfactory sheeting, shoring, and bracing shall be the entire responsibility of CONTRACTOR.
10. All Municipal, County, State, and Federal ordinances, codes, regulations, and laws shall be observed.

B. Sheeting Left in Place:
1. Steel sheet piling shown on the Drawings to be left in place shall consist of rolled sections of the continuous interlocking type, unless otherwise approved. The type and design of the sheeting and bracing shall conform to the above Specifications for all steel work for sheeting and bracing. Steel sheeting designated to be left in place shall be new.
2. Steel sheet piling to be left in place shall be driven straight to the lines and grades as shown on the Drawings or directed. The piles shall penetrate into firm materials with secure interlocking throughout the entire length of the pile. Damaged piling having faulty alignment shall be pulled and replaced by new piling.
3. The type of guide structure used and method of driving for steel sheet piling to be left in place shall be subject to the approval of ENGINEER. Jetting will not be permitted.
4. Cut-off piling left in place to the grades shown on the Drawings or directed by ENGINEER and remove the cut-offs from the site.
5. Clean wales, braces, and all other items to be embedded in the permanent structure, and ensure that the concrete surrounding the embedded element is sound and free from air pockets or harmful inclusions. Provisions shall include the cutting of holes in the webs and flanges of wale and bracing members, and the welding of steel diaphragm waterstops perpendicular to the centerline of brace ends which are to be embedded.
6. Subsequent to removal of the inside face forms, and when removal of bracing is permitted, cut back steel at least 2-inches inside the wall face and patch opening

with cement mortar. Concrete shall be thoroughly worked beneath wales and braces, around stiffeners, and in any other place where voids may be formed.

7. Portions of sheeting or soldier piles and breast boards which are in contact with the foundation concrete shall be left in place, together with wales and bracing members which are cast into foundation or superstructure concrete.

C. Removal of Sheeting and Bracing:
   1. Remove sheeting and bracing from excavations, unless otherwise directed in writing by ENGINEER. Removal shall be done so as to not cause injury to the Work. Removal shall be equal on both sides of excavation to ensure no unequal loads on pipe or structure.
      a. Defer removal of sheeting and bracing, where removal may cause soil to come into contact with concrete, until the following conditions are satisfied:
      b. Concrete has cured a minimum of seven days.
      c. Wall and floor framing, up to and including grade level floors, are in place.

3.8 TRENCH SHIELDS

A. Excavation of earth material below the bottom of a shield shall not exceed the limits established by ordinances, codes, laws, and regulations.

B. When using a shield for the installation of structures, the bottom of the shield shall not extend below the top of the bedding for the structures.

C. When a shield is removed, extreme care shall be taken to prevent damage to the structures or the disturbance of the bedding for structures. Structures that are disturbed shall be removed and reinstalled as specified.

3.9 PLACEMENT OF FILL AND BACKFILL

A. General:
   1. All engineered fill and backfill required for structures, embankments, and duct banks and required to provide the finished grades shown on the Drawings and as described herein shall be furnished, placed, and compacted by CONTRACTOR. Refer to and comply with the requirements of Section 02318, Crushed Stone and Gravel.
   2. Backfill excavations as promptly as Work permits, but not until completion of the following:
      a. Acceptance by the ENGINEER of construction below finish grade, including dampproofing, waterproofing, and perimeter insulation.
      b. Inspection, testing, approval, and recording of locations of underground duct banks.
      c. Minimum of seven days cure time for all concrete.
      d. Removal of concrete formwork.
      e. Removal of shoring and bracing, and backfilling of voids with satisfactory materials.

f. Removal of trash and debris.

3. Fill containing organic materials or other unacceptable material shall be removed and replaced with approved fill material as specified.

B. Placement of Engineered Fill, Backfill, Backfill, and Fill:

1. All material shall be placed to the grades shown on the Drawings. The lift thickness and compaction moisture content range given herein are approximate. These values shall be finally determined from the laboratory test results on the fill materials. Testing requirements shall be as specified in Paragraph 3.9.E., below.
2. All engineered fill shall be placed in horizontal loose lifts, not exceeding 8-inches in thickness, and shall be mixed and spread in a manner assuring uniform lift thickness after placing. Each lift shall be compacted by not less than two complete coverages of the specified compactor. Engineered fill shall be placed to the underside of all concrete slabs. The fill material shall extend a minimum of 2 feet outside the face of each structure and be 12-inches below finished grade on all structures. The maximum slope of select backfill to the subgrade shall be one vertical to one horizontal.
3. Backfill and fill around and outside of structures and over engineered fill shall be deposited in layers not to exceed 8-inches in uncompacted thickness and mechanically compacted, using platform type tampers. Compaction of structures backfilled by rolling will be permitted provided the desired compaction is obtained and damage to the structure is prevented. Compaction by inundation with water will not be permitted. All materials shall be deposited as specified herein and as shown on the Drawings.
4. The material shall be placed at a moisture content and density as specified under Paragraph 3.9.E., below. Provide equipment capable of adding measured amounts of water to the backfill and/or engineered fill material to bring it to a condition within the range of the required moisture content. Provide equipment capable of disking, aerating, and mixing the soil to ensure reasonable uniformity of moisture content throughout the fill material and to reduce the moisture content of the borrow material by air drying, if necessary. If the subgrade or lift of earth material must be moisture conditioned before compaction, the fill material shall be sufficiently mixed or worked on the subgrade to ensure uniform moisture content throughout the lift of material to be compacted. Materials at moisture content in excess of the specified limit shall be dried by aeration or stockpiled for drying.
5. No backfill or fill material shall be placed when free water is standing on the surface of the area where the fill is to be placed. No compaction of fill will be permitted with free water on any portion of the fill to be compacted. No fill shall be placed or compacted in a frozen condition or on top of frozen material. Any fill containing organic materials or other unacceptable material previously described shall be removed and replaced with approved fill material prior to compaction.
6. Compaction shall be performed with equipment suitable for the type of fill material being placed. Select equipment that is capable of providing the

minimum density required by these Specifications. Hand operated compacting equipment shall be used within a distance of 10 feet from the wall of any completed below grade structure. Equipment shall be provided that is capable of compacting in restricted areas next to structures and around piping. The effectiveness of the equipment selected shall be tested at the commencement of compacted fill work by construction of a small section of fill within the area where fill is to be placed. If tests on this section of fill show that the specified compaction is not obtained, increase the amount of coverages, decrease the lift thicknesses, and/or obtain a different type of compactor.

7. Levels of backfill against concrete walls shall not differ by more than 2 feet on either side of walls, unless walls are adequately braced or all floor framing is in place, up to and including grade level slabs. Particular care shall be taken to compact engineered fill which will be beneath pipes, roads, or other surface construction or structures. In addition, wherever a trench passes through engineered fill, the engineered fill shall be placed and compacted to an elevation 12-inches above the top of the pipe before the trench is excavated. Compacted areas, in each case, shall be adequate to support the item to be constructed or placed thereon.
8. The compaction requirements specified are predicated on the use of normal materials and compaction equipment. In order to establish criteria for the placement of a controlled fill so that it will have compressibility and strength characteristics compatible with the proposed structural loadings, a series of laboratory compaction and/or compressive strength tests shall be performed on the samples of materials submitted by CONTRACTOR. From the results of the laboratory tests, the final values of the required percent compaction, the acceptable compaction moisture content range, and the maximum permissible lift thickness will be established for the fill material and construction equipment proposed.
9. Control the water content of fill material during placement within the range necessary to obtain the compaction specified.

TYPE	AREA OF USE	MOISTURE CONTENT
On-site or Imported	Buildings, Structures, Exterior Slabs	Optimum ±3%
On-site or Imported	Pavements	2% Below Optimum or Lower
On-site or Imported	Trench/Structure Backfill	Optimum ±3%
Base Material	Structures and Pavements	Optimum ±3%

10. Perform all necessary Work to adjust the water content of the material to within the range necessary to permit the compaction specified. Do not place fill material when free water is standing on the surface of the area where the fill is

to be placed. No compaction of fill will be permitted with free water on any portion of the fill to be compacted.

11. Compact fill shall be compacted by at least two coverages of all portions of the surface of each lift by compaction equipment. One coverage is defined as the condition obtained when all portions of the surface of the fill material have been subjected to the direct contact of the compactor.
12. If the specified densities are not obtained because of improper control of placement or compaction procedures, or because of inadequate or improperly functioning compaction equipment, perform whatever Work is required to provide the required densities. This Work shall include complete removal of unacceptable fill areas, and replacement and recompaction until acceptable fill is provided.
13. If any settlement occurs, repairs will be at CONTRACTOR'S expense. Make all repairs and replacements necessary within 30 days after notice from ENGINEER or OWNER.

C. Backfill in Electrical Duct Bank Trenches:
   1. Compacted backfill shall be required for the full depth of the trench, below and above the electrical duct bank. Where the trench for one duct bank passes beneath the trench for another pipe or duct bank, engineered fill shall be placed to the level of the bottom of the upper trench.
   2. Placement and compaction of backfill in electrical duct bank trenches shall conform to the requirements of Paragraph 3.9.B., above.

D. Crushed Stone Placement:
   1. Crushed stone shall be placed where shown on the Drawings to the limits shown.
   2. Crushed stone shall be place in hand tamped lifts, not to exceed 6-inches.

E. Compaction Density Requirements:
   1. The degree of compaction required for all types of fills shall be as listed below. Material shall be moistened or aerated as necessary to provide the moisture content that will facilitate obtaining the specified compaction. Natural undisturbed soils or compacted soil subsequently disturbed or removed by construction operations shall be replaced with materials compacted as specified above.

MATERIAL	AREA OF USE	Percent Compaction
Soil	Deep fill and backfill zones (greater than 5 feet below finished grade): Below foundations and pavements: Below concrete floor slabs (above footing level):	100 95 95
Base Material	Below concrete slabs: Below flexible pavement sections: Backfill (outside of structure, exterior slab and pavement areas):	95 100 90
Trench and Structure Backfill	Below foundations and structures: Pipe and utility trenches: Subsurface wall backfill:	100 100 100

2. CONTRACTOR'S testing service shall perform tests necessary to provide data for selection of fill material and control of placement water content.
3. Field density tests, to ensure that the specified density is being obtained, shall be performed by CONTRACTOR'S testing service during each day of compaction work.
4. If the tests indicate unsatisfactory compaction, provide the additional compaction necessary to obtain the specified degree of compaction. All additional compaction work shall be performed by CONTRACTOR, at no additional cost to the OWNER, until the specified compaction is obtained. This work shall include complete removal of unacceptable (as determined by the ENGINEER) fill areas and replacement and recompaction until acceptable fill is provided.

F. Replacement of Unacceptable Excavated Materials: In cases where over-excavation for the replacement of unacceptable soil materials is required, the excavation shall be backfilled to the required subgrade with select backfill material and thoroughly compacted as specified in Paragraph 3.9.E., above. Sides of the excavation shall be sloped in accordance to the maximum inclinations specified for each structure location.

3.10 EMBANKMENTS

A. To the maximum extent available, use excess earth obtained from structure and underground duct bank excavations for construction of embankments. Obtain additional material from borrow pits as necessary. After preparation of the embankment area, level and roll the subgrade so that surface materials of the subgrade will be compact and well bonded with the first layer of the embankment. All material deposited in embankments shall be free from rocks or stones, brush, stumps, logs, roots, debris, and organic or other objectionable materials. Construct embankments in horizontal layers not exceeding 8-inches in uncompacted thickness. Spread and level material deposited by excavating and hauling equipment prior to

compaction. Thoroughly compact each layer by rolling or other method acceptable to the ENGINEER to meet the percent of the maximum density specified in Paragraph 3.9.B.9 at optimum moisture content as determined by ASTM D698. If the material fails to meet the density specified, compaction methods shall be altered. Wherever an excavation passes through a fill or embankment, the fill or embankment material shall be placed and compacted to an elevation 24-inches above the top of the trench, before trench is excavated.

3.11 GRADING

A. General: Uniformly grade areas within limits of grading under this Section, including adjacent transition areas. Smooth subgrade surfaces within specified tolerances, compact with uniform levels or slopes between points where elevations are shown on the Drawings, or between such points and existing grades.

B. Grading Outside Building Lines: Grade areas adjacent to building lines to drain away from structures and to prevent ponding. Finish surfaces free from irregular surface changes, and as follows:
   1. Turfed Areas or Areas Covered with Gravel, Stone, Wood Chips, or Other Special Cover: Finish areas to receive topsoil or special cover to within not more than 1-inch above or below the required subgrade elevations.
   2. Walks: Shape surface of areas under walks to line, grade, and cross-section with finish surface not more than 1-inch above or below the required subgrade elevation.
   3. Pavements: Shape surface of areas under pavement to line grade, and cross-section with finish surface not more than 1/2-inch above or below the required subgrade elevation.

C. Grading Surface of Fill Under Building Slabs: Grade smooth and even, free of voids, compacted as specified, and to required elevation. Provide final grades within a tolerance of 1/2-inch when tested with a 10 foot straightedge.

D. Compaction:
   1. After grading, compact subgrade surfaces to the depth and percentage of maximum density for each area classification.

3.12 PAVEMENT SUBBASE COURSE

A. Base course below all asphalt pavements shall be a minimum of 6-inches thick.
   1. Refer to Section 02500, Asphalt Pavement, for paving Specifications.

B. Grade Control: During construction, maintain lines and grades, including crown and cross-slope of subbase course.

C. Shoulders: Place shoulders along edges of base course to prevent lateral movement. Construct shoulders of acceptable soil materials, placed in such quantity to compact

to thickness of each base course layer. Compact and roll at least a 12-inch width of shoulder, simultaneously with compacting and rolling of each layer of base course.

D. Placing: Place base course material on prepared subgrade in layers of uniform thickness, conforming to indicate cross-section and thickness. Maintain optimum moisture content for compacting base material during placement operations.
   1. When a compacted base course is shown on the Drawings to be 6-inches thick or less, place material in a single layer. When shown on the Drawings to be more than 6-inches thick, place material in equal layers, except no single layer more than 6-inches or less than 3-inches in thickness when compacted.

3.13 DISPOSAL OF EXCAVATED MATERIALS

A. Material removed from the excavations which does not conform to the requirements for fill or is in excess of that required for backfill shall be hauled away from the Project site by CONTRACTOR and disposed of in compliance with ordinances, codes, laws, and regulations at no additional cost to the OWNER. Refer to and comply with the requirements of Section 02100, Site Preparation.

3.14 RESTORING AND RESURFACING EXISTING ROADWAYS AND FACILITIES

A. Place 1-1/2-inches of temporary bituminous pavement immediately after backfilling trenches in paved roadways which are to be retained for permanent use. Maintain the surface of the paved area over the trench in good and safe condition during progress of the entire Work, and promptly fill all depressions over and adjacent to the trench caused by settlement of backfilling. The permanent replacement pavement shall be equal to that of the existing roadways, unless otherwise specified.

B. Pavement, gutters, curbs, sidewalks, or roadways disturbed or damaged by the CONTRACTOR'S operations, except areas designated "New Pavement" or "Proposed Pavement", shall be restored by CONTRACTOR at his own expense to as good condition as they were previous to the commencement of the Work and in accordance with applicable local and State highway specifications.

3.15 FIELD QUALITY CONTROL

A. Refer to Paragraph 1.2.4 of this Section.

END OF SECTION

SECTION 02318

CRUSHED STONE, GRAVEL AND DECOMPOSED GRANITE

PART 1 - GENERAL

1.1 SUMMARY

A. Scope:
   1. Provide all labor, materials, equipment and incidentals required to furnish and install crushed stone, gravel and decomposed granite of the types specified at locations shown on the Drawings and as directed by the ENGINEER.

1.2 SECTION INCLUDES

A. Crushed Stone.

B. Gravel.

1.3 RELATED SECTIONS

A. Section 01300, Submittals.

B. Section 02315, Earthwork, Excavation, and Backfill

C. Section 15051, Buried Piping Installation.

1.4 QUALITY ASSURANCE

A. Conform to all applicable requirements of Section 701 of the Uniform Standard Specifications for Public Works Construction by the Maricopa Association of Government (MAG) as supplemented by the City of Chandler. Where there is a conflict between MAG Standard Specifications as supplemented by the City of Chandler and these Specifications, the provisions of these Specifications shall govern.

B. Sampling and sieve analysis shall be performed in accordance with ASTM D75 and ASTM C136.

1.5 SUBMITTALS

A. Submit for approval the following:
   1. Furnish representative samples of the crushed stone and gravel to the ENGINEER and advise of the source location.
   2. Test reports, including sieve analyses, showing material compliance with specified requirements.

B. Shop Drawings: Submit for approval the following:
   1. A copy of this specification section, with addendum updates included, and all referenced and applicable sections, with addendum updates included, with each paragraph check-marked to indicate specification compliance or marked to indicate requested deviations from specification requirements. Check marks (✓) shall denote full compliance with a paragraph as a whole. If deviations from the specifications are indicated, and therefore requested by the CONTRACTOR, each deviation shall be underlined and denoted by a number in the margin to the right of the identified paragraph, referenced to a detailed written explanation of the reasons for requesting the deviation. The ENGINEER shall be the final authority for determining acceptability of requested deviations. The CONTRACTOR shall furnish equipment and/or services as specified if an exception and/or deviation is rejected. The remaining portions of the paragraph not underlined will signify compliance on the part of the CONTRACTOR with the specifications. Failure to include a copy of the marked-up specification sections, along with justification(s) for any requested deviations to the specification requirements, with the submittal shall be sufficient cause for rejection of the entire submittal with no further consideration.
   2. The CONTRACTOR shall submit the preventive maintenance information package as part of the shop drawing submittal package to the ENGINEER for review and approval. **SHOP DRAWING SUBMITTAL PACKAGE WILL NOT BE APPROVED WITHOUT ACCEPTANCE OF PREVENTIVE MAINTENANCE INFORMATION.**

PART 2 - PRODUCTS

2.1 MATERIALS

A. General:
   1. Furnish and place crushed stone or screened gravel fill under pipe or structures where shown on the Drawings in addition to that required under other Sections. Comply with requirements of Section 15051, Buried Piping Installation.
   2. Crushed stone and gravel shall be clean, hard, sound, durable, uniform in quality, and free of any detrimental quantity of soft, friable, thin elongated, or laminated pieces, disintegrated material, organic matter, oil, alkali, or other deleterious substance.
   3. The loss by abrasion in the Los Angeles abrasion machine, determine as prescribed in ASTM C131, Grading A, shall not exceed 10%, by weight, after 100 revolutions nor 40% after 500 revolutions.

B. Crushed Stone:
   1. Crushed stone shall consist of the product obtained by crushing rock, stone, or gravel so that at least 50% by weight of aggregate retained on the No. 4 sieve for 3/4-inch or larger maximum sizes, and 50% retained on the No. 8 sieve for

maximum sizes less than 3/4-inch shall consist of particles which have at least one rough, angular surface produced by crushing.

2. The gradation of crushed stone shall comply with ASTM D448.

C. Gravel:
   1. Material designated herein as gravel shall be composed entirely of particles that are either fully or partially rounded and water-worn.
   2. Crushed rock obtained by crushing rock which exceeds ASTM D448 maximum gradation sizes may be combined provided it is uniformly distributed throughout and blended with the gravel. The quality and gradation requirements shall be as stated in this Specification.

D. Decomposed Granite:
   1. Decomposed granite shall be 3/4-inch minus, supplied from a single supply source, for a uniform appearance throughout the Project. It shall be free from lumps or balls of clay and shall not contain any calcareous coatings, caliches, organic matter or foreign substances.

PART 3 - EXECUTION

3.1 PLACING

A. Gravel shall be spread in layers of uniform thickness not exceeding 8-inches and shall be thoroughly compacted with suitable power driven tampers or other power driven equipment. The placing of crushed stone or gravel shall conform to applicable requirements of Section 02315, Earthwork, Excavation, and Backfill except as noted above.

B. Prior to placing decomposed granite, all areas to receive it shall be sprayed with a pre-emergent herbicide according to the manufacturer's recommendations within Maricopa Association of Governments (civil) requirements. Do not spray herbicide on any areas designated to receive seeding. Decomposed granite shall be rolled uniformly for depth and compacted to all areas designated on the DRAWINGS to a minimum depth of 2–inches.

++ END OF SECTION ++

SECTION 02319

RIPRAP

PART 1 - GENERAL

1.1 SUMMARY

A. Scope:
   1. Provide all labor, materials, equipment and incidentals required to furnish and place riprap at locations shown on the Drawings and specified.
   2. Any existing riprap removed shall be replaced by CONTRACTOR at no additional cost to the OWNER.

1.2 SECTION INCLUDES

A. Rip Rap.

1.3 RELATED SECTIONS

A. Section 01300, Submittals.

1.4 QUALITY ASSURANCE

A. Conform to all applicable requirements of Section 703 in the Uniform Standard Specifications for Public Works Construction by the Maricopa Association of Governments (MAG) as supplemented by the City of Chandler. If there is a conflict between the MAG Standard Specifications, as supplemented by the City of Chandler, and these Specifications, the provisions in these Specifications shall govern.

1.5 SUBMITTALS

A. Shop Drawings: Submit for approval the following:
   1. A copy of this specification section, with addendum updates included, and all referenced and applicable sections, with addendum updates included, with each paragraph check-marked to indicate specification compliance or marked to indicate requested deviations from specification requirements. Check marks (✓) shall denote full compliance with a paragraph as a whole. If deviations from the specifications are indicated, and therefore requested by the CONTRACTOR, each deviation shall be underlined and denoted by a number in the margin to the right of the identified paragraph, referenced to a detailed written explanation of the reasons for requesting the deviation. The ENGINEER shall be the final authority for determining acceptability of requested deviations. The CONTRACTOR shall furnish equipment and/or services as specified if an exception and/or deviation is rejected. The remaining portions of the paragraph

not underlined will signify compliance on the part of the CONTRACTOR with the specifications. Failure to include a copy of the marked-up specification sections, along with justification(s) for any requested deviations to the specification requirements, with the submittal shall be sufficient cause for rejection of the entire submittal with no further consideration.

2. The CONTRACTOR shall submit the preventive maintenance information package as part of the shop drawing submittal package to the ENGINEER for review and approval. **SHOP DRAWING SUBMITTAL PACKAGE WILL NOT BE APPROVED WITHOUT ACCEPTANCE OF PREVENTIVE MAINTENANCE INFORMATION.**

PART 2 - PRODUCTS

2.1 MATERIAL

A. Stone for riprap shall be sound and durable, free from seams and coatings, and of such characteristics that it will not disintegrate when subjected to the action of water.

B. Riprap shall conform to the applicable requirements of ADOT Standard Specification Section 913 - Bank Protection for Dumped Riprap.

C. Riprap within the spillways shall be 16-inches nominal; no more than 50% shall be smaller than 8-inches and no more than 10% shall be smaller than 4-inches. Riprap within other locations onsite shall be 12-inches nominal; no more than 50% shall be smaller than 6-inches and no more than 10% shall be smaller than 3-inches

D. Stones salvaged from excavation and meeting the above requirements may be used for riprap, if approved by the ENGINEER.

PART 3 - EXECUTION

3.1 PLACING

A. Areas to receive riprap shall be cleared, fine graded, and have an application of pre-emergent weed control per the manufacturer's recommendations.

B. Minimum total thickness of the riprap layer shall be 16-inches within spillways and 12-inches elsewhere, unless otherwise noted.

C. The stones shall be placed so that the weight of the stone is carried by the underlying material and not by the adjacent stones. On slopes, the largest of stones shall be at the bottom. Riprap shall be of proper size to form a compact solid blanket to protect the slopes. Rounded boulders or cobbles shall not be used on slopes steeper than 2:1, unless grouted.

D. Riprap shall be placed so as to conform as closely as practicable in size and character to existing riprap, if applicable.

E. Riprap may be placed in location by equipment; however, care shall be taken in placing to obtain a good gradation of materials so that the riprap will be firm and solid. Surfaces shall be leveled to the required alignment and slopes by hand placing the stone so as to fill large voids and to make the surface even.

F. Where riprap is adjacent to pavement, the elevation of the riprap shall meet the elevation of the pavement.

G. Apply a second application of pre-emergent herbicide in accordance with the manufacturer's recommendations.

H. All herbicide applications shall be done by a certified applicator licensed by the State of Arizona.

++ END OF SECTION ++

SECTION 02371

FILTER FABRIC FOR RIPRAP CHANNELS

PART 1 - GENERAL

1.1 SUMMARY

A. Section includes non-woven engineering fabrics (geo-textile) for riprap lined channels.

1.2 REFERENCES

A. American Society for Testing and Materials (ASTM):
   1. D 3786 - Test Method for Mullen Burst Strength.
   2. D 1777 - Test Methods for Fabric Dimensions.
   3. D 5261 - Test Methods for Mass per Unit Area (Weight) of Non-Woven Fabric.
   4. D 4491 - Test Methods for Water Permeability of Geo-textiles by Permittivity.
   5. D 4632 - Test Method for Grab Breaking Load and Elongation of Geo-textiles.
   6. D 4833 - Test Method for Puncture Resistance of Geo-textiles.
   7. D 4533 - Test Method for Trapezoidal Tear of Geo-textiles.
   8. D 4751 - Test Methods for Apparent Opening Size of Geo-textiles.
   9. D 4355 - Test Methods for UV Resistance of Geo-textiles by Permittivity.

1.3 DEFINITIONS

A. Filter Fabric for riprap channels: Geo-textile shall be a needle punched, nonwoven fabric composed of 100 percent polyester or polypropylene filaments which are formed into a stable network such that the filaments retain their relative position. The fabric shall be inert to biological degradation and resistant to naturally encountered chemicals, alkalizes, and acids.

1.4 PROJECT CONDITIONS

A. Take field measurements to determine the exact lengths and dimension of the surfaces to receive the fabric.

1.5 SUBMITTALS

A. Product data.

B. Provide samples.

C. Shop Drawings: Submit for approval the following:
   1. A copy of this specification section, with addendum updates included, and all referenced and applicable sections, with addendum updates included, with each

paragraph check-marked to indicate specification compliance or marked to indicate requested deviations from specification requirements. Check marks (✓) shall denote full compliance with a paragraph as a whole. If deviations from the specifications are indicated, and therefore requested by the CONTRACTOR, each deviation shall be underlined and denoted by a number in the margin to the right of the identified paragraph, referenced to a detailed written explanation of the reasons for requesting the deviation. The ENGINEER shall be the final authority for determining acceptability of requested deviations. The CONTRACTOR shall furnish equipment and/or services as specified if an exception and/or deviation is rejected. The remaining portions of the paragraph not underlined will signify compliance on the part of the CONTRACTOR with the specifications. Failure to include a copy of the marked-up specification sections, along with justification(s) for any requested deviations to the specification requirements, with the submittal shall be sufficient cause for rejection of the entire submittal with no further consideration.

2. The CONTRACTOR shall submit the preventive maintenance information package as part of the shop drawing submittal package to the ENGINEER for review and approval. **SHOP DRAWING SUBMITTAL PACKAGE WILL NOT BE APPROVED WITHOUT ACCEPTANCE OF PREVENTIVE MAINTENANCE INFORMATION.**

D. Quality Control Submittals:
   1. Certificates of Compliance.
   2. Manufacturer's instructions.

1.6 DELIVERY, STORAGE, AND HANDLING

A. Storage and Protection:
   1. Furnish engineering fabrics in protective covers capable of protecting the fabric from ultraviolet rays, abrasion, and water.

PART 2 - PRODUCTS

2.1 MANUFACTURERS

A. One of the following or approved equal:
   1. Mirafi S1000, by Tencate, Pendergrass, GA., (706) 693-2226
   2. Skaps GT-110 by Pendergrass, GA., 1-706-693-3440.

2.2 MATERIAL REQUIREMENTS

A. Physical Properties: Meet the following minimum requirements.

	ASTM	Requirement
Fabric		
Weight	D 5261	10 oz/ yd2
Thickness	D 1777	115 mils
Apparent Opening Size	D 4751	70 (Stnd Sieve)
Grab Tensile Strength	D 4632	250 lbs
Grab Elongation	D 4632	50%
Mullen Burst Strength	D 3786	510 psi
Puncture Resistance	D 4833	130 lbs
Trapezoidal Tear	D 4533	100 lbs
UV Resistance	D 4355	70%
Water Permittivity	D 4491	1.07 sec-1
Water Flow Rate	D 4491	80 gpm/ft2

PART 3 - EXECUTION

3.1 PREPARATION

A. Surface Preparation: During grading operations, take care not to disturb or scarify the sub-grade. This may require use of lightweight dozers for low strength soils such as saturated, cohesionless, or low cohesion soils. Recompact if sub-grade is scarified.

B. Prior to placement of fabric, prepare surface to smooth conditions free of debris, depressions, or obstructions that may damage the fabric.

3.2 INSTALLATION

A. Follow manufacturer's installation instructions and as complimented herein.

B. Place the geo-textile fabric smoothly without folds or wrinkles.

C. Use special care when placing the geo-textile in contact with the soil so that no void spaces occur between the geo-textile and the prepared surface.

D. Overlap the geo-textile sheets according to manufacturer's installation.

E. Provide turndowns along the longitudinal fabric edges to utilize the surrounding soil weight for anchoring the fabric. These turndowns will extend vertically beneath the

riprap sub-grade and horizontally away for a distance equal to the riprap blanket thickness or 2', whichever is greater.

F. Place drainage aggregate on the geo-textile as specified Section 02319.

3.3 FIELD QUALITY CONTROL

A. Inspection: Before covering, the conditions of the fabric will be observed by the ENGINEER to determine that no holes or rips exist in the fabric. Repair all such occurrences by placing a new layer of fabric extending beyond the defect in all directions a distance equal to the minimum overlap required for adjacent rolls.

++ END OF SECTION ++

SECTION 02480

LANDSCAPE

PART 1 - GENERAL

1.1 SUMMARY

A. Landscaping.

B. All Work shall conform to the Maricopa Association of Government's (MAG) Uniform Standard Specifications for Public Works Construction and the City of Chandler supplements thereto, with the following modifications.

C. The extent of landscape development Work is shown on the Project Plans. Wherever a discrepancy exists between the quantities shown on the Plans and those listed in these Specifications, the quantities shown on the Plans shall prevail.

1.2 RELATED SECTIONS

A. Section 02319, Riprap.

B. Section 02810, Irrigation System.

1.3 QUALITY ASSURANCE

A. In accordance with Division 1, General Requirements.

B. Landscape Contractor Qualifications: Single firm with appropriate and current State of Arizona CONTRACTOR'S license as outlined in MAG Section 103 and a minimum of five year's experience in landscape installation and maintenance. If the low bidder does not have the appropriate license, the City reserves the right to reject their bid and award it to the lowest bidder who has the appropriate license.

C. Project Supervisor Qualifications: Individual with minimum of five year's experience in landscape installation and maintenance. On-site during all landscape operations to oversee Work in this Section.

D. Regulatory Requirements: Perform Work in accordance with all applicable codes, ordinances, and regulations required by authorities having jurisdiction over such Work. Provide for all inspections and permits required by Federal, State, and local authorities in furnishing, transporting, and installing materials as shown or for completing the Work identified herein.

E. Source Quality Control:

1. Ship landscape materials with Certificates of Inspection required by governmental authorities.
2. Comply with governmental regulations applicable to landscape materials.

F. Labeling: Securely attach durable, legible labels stating in weather resistant ink the correct manufacturer, supplier, material, plant or product name to all material delivered to the site.

G. Materials shall be of standard, approved, and first grade quality in prime condition when installed. Commercially processed or packaged materials shall be delivered as specified below.

H. Plants:
1. In accordance with Arizona Department of Agriculture regulations for nursery inspections, ratings and rules.
2. Clearly labeled with durable, legible labels stating correct botanical name of each plant.
3. Plants shall show evidence of compliance with the Arizona Native Plant Law.

I. Trees:
1. Conform to sizes in Arizona Nursery Association Grower's Committee "Recommended Average Tree Specifications".
2. Measure trees with branches and trunks in their normal position for conformance. Do not prune to obtain required sizes. Measure main body of tree for height and spread dimensions. Do not measure from branch or root tip-to-tip.

J. Samples and Tests:
1. The ENGINEER reserves the right to analyze samples of materials for conformity to the Specifications at any time. CONTRACTOR shall furnish samples upon request by the ENGINEER. Rejected materials shall be immediately removed from the site at the CONTRACTOR'S expense. Cost of testing of materials not meeting Specifications shall be paid by the CONTRACTOR.

1.4 REFERENCE STANDARDS

A. AAN - ASNS, American Association of Nurserymen, Inc., American Standard for Nursery Stock; 1986 edition.

B. ADWR - AMA, Arizona Department of Water Resources, Active Management Area Approved Plant List; latest edition.

C. AJCHN - SPN, American Joint Committee on Horticultural Nomenclature, Standardized Plant Names; 2nd edition, 1942.

D. ANA, Arizona Nursery Association Grower's Committee, Recommended Average Tree Specifications; latest edition.

E. ASTM, American Society for Testing and Materials.

F. MAG, Maricopa Association of Governments Uniform Standard Specifications for Public Works Construction; latest edition.

1.5 SUBMITTALS

A. In accordance with Division 1, General Requirements.

B. Submittal Procedures:
   1. Forward all submittals to the ENGINEER in single package within 30 days of award of Contract.
   2. Forward each submittal with Letter of Transmittal identifying name of CONTRACTOR, name of Project, items being transmitted, and action required.

C. Submittals Required:
   1. Qualifications of Landscape Contractor.
   2. Qualifications of Project Supervisor.
   3. Names and qualifications of subcontractors, if applicable.
   4. Names and addresses of suppliers.
   5. Construction Schedule: Submit anticipated construction schedule at start of Project.
   6. Decomposed Granite: Two 5 lb bags containing representative sample of granite showing color, size range, and texture.
   7. Granite Riprap: Two 10 lb bags containing representative sample of granite showing color, size range, and texture.
   8. Schedule of pre-emergent herbicide application dates.
   9. Soil test results and recommendations.
   10. Testing and Inspection Service: OWNER will employ and pay for a qualified independent geotechnical testing and inspection laboratory to perform soil testing and inspection service during earthwork operations.
   11. Material specifications for soil amendments, conditioners, fertilizers, and mulches.
   12. Maintenance Manuals: Complete type written instructions to OWNER for proper care, feeding, and maintenance of landscape.
   13. As-Built Drawings: In accordance with Division 1, General Requirements.

D. A copy of this specification section, with addendum updates included, and all referenced and applicable sections, with addendum updates included, with each paragraph check-marked to indicate specification compliance or marked to indicate requested deviations from specification requirements. Check marks (✓) shall denote full compliance with a paragraph as a whole. If deviations from the specifications are indicated, and therefore requested by the CONTRACTOR, each deviation shall be

underlined and denoted by a number in the margin to the right of the identified paragraph, referenced to a detailed written explanation of the reasons for requesting the deviation. The ENGINEER shall be the final authority for determining acceptability of requested deviations. The CONTRACTOR shall furnish equipment and/or services as specified if an exception and/or deviation is rejected. The remaining portions of the paragraph not underlined will signify compliance on the part of the CONTRACTOR with the specifications. Failure to include a copy of the marked-up specification sections, along with justification(s) for any requested deviations to the specification requirements, with the submittal shall be sufficient cause for rejection of the entire submittal with no further consideration.

E. The CONTRACTOR shall submit the preventive maintenance information package as part of the shop drawing submittal package to the ENGINEER for review and approval. **SHOP DRAWING SUBMITTAL PACKAGE WILL NOT BE APPROVED WITHOUT ACCEPTANCE OF PREVENTIVE MAINTENANCE INFORMATION.**

1.6 DELIVERY, STORAGE, AND HANDLING

A. General: The CONTRACTOR shall hold harmless the City of Chandler from potential claims arising from the use of City lands, acts of vandalism, or delays resulting from theft or unauthorized removal of materials or equipment from the storage yard if an on-site storage yard is allowed by the ENGINEER.

B. Delivery:
   1. Regulatory Requirements: Comply with all Federal, State, and local regulations governing the transporting, storing, and handling of landscape materials, including application of herbicides, insecticides, and pesticides.
   2. Packaged Material: Deliver to site in original, unopened containers labeled to show name of manufacturer or supplier, guaranteed analysis, weight, and conformance to governing regulations.
   3. Plants:
      a. Do not deliver plants until site conditions are ready for planting.
      b. Do not deliver more plants than can be planted within three days.
      c. Do not prune plants prior to delivery unless approved by ENGINEER.
      d. Prepare plants for shipping and load in a manner that will not cause damage to bark, branches, foliage, plant structure, or root ball.
      e. Secure plants and provide protective covering during delivery.

C. Storage:
   1. Packaged Material: Store and cover materials to prevent deterioration.

D. Plants:
   1. If planting is delayed more than six hours after delivery, set plants in shade. Protect from weather and damage.

2. Set bare root plants in temporary planting bed and cover roots with soil.
3. Keep roots moist until planting.

E. Handling:
1. Handle container stock only by container.
2. Do not remove container stock from container until planting time.
3. Handle plants so that the root ball will not be broken or loosened.

F. Rejected Materials: Immediately remove rejected materials from the site and replace with new materials at no additional cost to OWNER.

1.7 SITE CONDITIONS

A. Examination of the Site: Review Project Plans and visit site prior to bidding. No allowances will be made after the bid for existing conditions or CONTRACTOR'S failure to verify existing conditions.

B. Coordination: Coordinate landscaping operations with other trades so that conflicts will neither exist nor delay the Work in any manner.

C. Underground Utilities: Locate and protect underground utilities in landscape areas by calling Blue Stakes. Hand excavate as required. Repair damage resulting from landscaping operations at no cost to OWNER.

D. Subgrade: CONTRACTOR will receive the site "as is" and will be responsible for the establishment of subgrades as necessary to meet the finish grades as shown on the Project Plans and details. CONTRACTOR may excavate on-site material or supply and place topsoil as necessary to establish subgrade elevations.

E. Obstructions: If rock, underground construction, or other obstructions are encountered during excavation for planting, notify the ENGINEER. New locations may be determined by the ENGINEER or instructions issued to direct removal of obstruction to a depth of not less than 6-inches below required planting depth. Proceed with Work only after approval of ENGINEER.

F. Existing Plants: All existing plants not affected by site grading or other site construction shall be protected in place. Confirm limits of Work before starting Work.

G. Existing Irrigation: Existing irrigation system shall remain in place and be kept fully operative throughout construction. New plantings near the chlorine contact basin and new entry drive will be added to the existing irrigation system.

H. Discrepancies in these conditions shall be reported to the ENGINEER and corrected prior to the start of landscaping operations.

I. Unless otherwise approved, planting is permitted during any period except those prohibited by unfavorable weather.

1.8 SEQUENCING AND SCHEDULING

A. Sequencing: Review Work described in other Sections and coordinate landscape work with other trades.

B. Scheduling: Submit Project schedule within 30 days of award of Contract and update with each Application for Payment.

1.9 ALTERNATES AND SUBSTITUTIONS

A. Alternates:
   1. In accordance with Division 1, General Requirements.

B. Substitutions:
   1. Do not make substitutions. If specified material is not available in the local market, submit proof of non-availability from three nurseries, together with request for substitution and any corresponding adjustment in Contract price in writing to ENGINEER.
   2. Substitutions will be approved by the ENGINEER on the condition that they meet the design intent of the material originally specified.
   3. Substitutions must be approved in writing by the ENGINEER prior to installation.

1.10 WARRANTY

A. All plants shall be in a healthy and thriving condition after the 90 day maintenance period for one year from date of Final Acceptance.

B. Immediately replace rejected material at no additional cost to OWNER.

C. Warranty replacement plants the same as original plants.

D. Visit site at least once every four weeks during warranty period and notify OWNER in writing of any advised changes.

E. Notify ENGINEER one week prior to end of warranty period to request final landscaping inspection. ENGINEER will conduct inspection and give CONTRACTOR notice of Work that is unacceptable and requiring correction. The CONTRACTOR shall immediately make such corrections.

PART 2 - PRODUCTS

2.1 MATERIALS

A. In accordance with Section 01640, Materials and Equipment, requirements.

B. Plants: Plants shall be in accordance with Arizona Department of Agriculture regulations for nursery inspections, ratings, and rules. All plants shall have a normal habit of growth and shall be sound, healthy, vigorous, and free of diseases, insect infestations, sun scalds, bark abrasions, or other objectionable disfigurements. The ENGINEER shall be the sole judge as to acceptability.
   1. Plants Required: The species, sizes, and approximate quantity required are shown on the Plant List. Plant quantities on list are indicated for convenience. Furnish all plants necessary to complete plantings as shown on the Landscape Plan. Surplus or shortages on the Plant List shall not be used for additional claims against the OWNER.
   2. Plant Sizes: The size of all plants shall correspond to that normally expected for the species and variety specified or as otherwise specified on the Plans.
   3. Trees: Shall be dug and boxed at least 90 days prior to planting.
      a. Trees shall have a straight trunk through their entire height and any tree with a thin weak trunk not capable of supporting itself when planted will not be accepted.
   4. Container Grown Plants: Shall have been grown in boxes, cans, pots, or tubs for a minimum of three months and a maximum of one year in similar climatic conditions and shall have sufficient roots to hold earth together intact when removed from container. In no case shall they be root bound. Containers shall be free from noxious weeds, including Bermuda grass and nut grass. The ENGINEER may remove any questionable plants from the container to inspect the root ball. The CONTRACTOR will receive no payment for plants selected for inspection; such plants being considered samples submitted for the ENGINEER'S inspection and approval.
   5. Defective Materials: Any plants not conforming to the requirements specified herein shall be considered defective and shall be marked as rejected, immediately removed from the site, and replaced with new plants at the expense of the CONTRACTOR. Under no conditions will there be any substitutions of plants or sizes listed on the Plans except with the express approval of the ENGINEER.

C. Soil Amendments:
   1. Soil Sulfur: Agricultural grade sulfur containing a minimum of 95% elemental sulfur.

D. Fertilizer:
   1. Shall be Agriform 7 gram 20-10-05 fertilizer tablets or equal, installed per details.

E. Topsoil: Screened, fertile, friable soil from well drained arable land, free of heavy clay, noxious weeks, nut grass, refuse, roots or any material detrimental to plant growth. Content: clay 15% - 20%, sand 30% - 60%, silt 20% - 45% with a minimum of 5% organic matter, (natural or added). Ph no lower than 5.5 and no higher than 8.0 soluble salts shall not exceed 1,500 ppm. Plasticity index range of 3 to 10 inclusive.

1. Imported Topsoil: Shall meet or be amended to meet topsoil requirements as described above. For each source of topsoil, a standard soils test shall be performed to determine the quantity and types of soil amendments required to meet local growing conditions for the type and variety of plants specified.
2. Gradation shall be as follows:

Sieve Size	Percent Passing
1-	100
1/2-inch	95 - 100
No. 4	90 - 100
No. 10	70 - 100
No. 200	15 - 70
No. 500	20 - 35

F. Planting Soil:

1. The backfill soil mixture for trees, shrubs, and cacti shall be native site soil.
2. Other soil amendments shall be added to the backfill as determined by the soils analysis.
3. Defective Materials: Any plants not conforming to the requirements specified herein shall be considered defective and shall be marked as rejected, immediately removed from the site, and replaced with new plants at the expense of the CONTRACTOR. Under no conditions will there be any substitutions of plants or sized listed on the Plans, except with the express approval of the ENGINEER.

G. Guying, Staking Ties, and Tree Protection Materials:

1. Tree Stakes: Sound and knot free Lodgepole Pine or Redwood, uniformly sized 2-inches by 2-inches by 96-inches with pointed driving end, capable of at least two years in ground burial. Quantity to securely support trees as required; two minimum.
2. Staking Ties: No 12 gage annealed galvanized wire with new 2-ply, 1/2-inch diameter reinforced rubber garden hose tie.

H. Weed Control:

1. Pre-Emergent: Elanco Mfg. Co. - Surflan 75W, or approved equal.
2. Contact Herbicide: Monsanto - Round Up, or approved equal.

I. Decomposed Granite:
   1. In accordance with MAG Sections 430 and 795. Color and size shall match the existing decomposed granite color; provide City a sample for approval prior to ordering.
   2. Gradation shall be as follows:

Sieve Size	Percent Passing
1-1/4-inches	100
1-inch	100
3/4-inch	60 - 80
1/2-inch	45 - 75
No. 40	5 – 20

PART 3 - EXECUTION

3.1 INSPECTION

A. Examine site conditions to verify site is ready for landscape operations to begin. If an unsatisfactory condition exists, immediately notify the ENGINEER. Do not begin Work until unsatisfactory conditions are corrected.

B. As soon as possible after all or portions of the site becomes available for landscaping, contract with a licensed soils lab to take a minimum of six soil samples (0-1 foot depth) at locations within the landscaped areas approved by the OWNER of the existing in-situ soil for use in agricultural fertility analyses.
   1. The soil analysis shall include all characteristics necessary to make fertility recommendations for landscape, lawn, and garden applications. Perform and include in the report a soil analysis showing parts per million (ppm) of Ca, Mg, Na, K, Fe, Zn, Mn, Cu, nitrate, nitrogen, and phosphorus at the test locations. Also include levels of salinity, pH, sodium, and free lime. Include recommendations for soil amendments to correct any nutrient deficiencies, eliminate conditions detrimental to plant growth, and improve the soil fertility.
   2. Provide the test results and recommendations to the OWNER for review. If, in the opinion of the OWNER, the testing warrants a change in the soil amendments, the OWNER will request a proposal for incorporating the additional amendments into the Project. Changes to soil amendments from

those shown in these Contract Documents will be covered by an adjustment in Contract price for the affected items as approved by the OWNER.

3.2 PREPARATION

A. Layout:
   1. Layout all landscape areas and secure ENGINEER'S approval prior to planting. Make minor adjustments as required.

3.3 INSTALLATION:

A. Excavation:
   1. Plant pits shall be dug to produce vertical sides and flat, uncompacted bottoms. Scarify sides of pits to prevent glazing. Test plant pits for drainage by filling with water twice in succession. If pit fails to drain within 24 hours, notify ENGINEER and implement hardpan planting detail.

B. Planting:
   1. Cut containers on two sides with metal cutter, or remove bottoms of wooden boxes before setting. Do not use spade to cut cans. Do not handle plants by branches, foliage, or trunks. After removing plant from container, scarify side of root ball to eliminate root bound condition.
   2. Do not use plant if root ball is broken or loosened during planting operation.
   3. Set plant in plant pit, centered and plumb, with best face toward side most viewed, and top of root ball at elevation necessary to accomplish finish grading.
   4. When plant is set, place backfill mix and fertilizer tablets around the plant. Work each layer to settle backfill mix and eliminate air pockets and voids.
   5. When plant pit is approximately 2/3 full, water thoroughly before placing remainder of backfill mix. Water again after placing final layer of backfill mix.
   6. Remove labels and tags from plants.

C. Decomposed Granite:
   1. Areas to receive decomposed granite shall be cleared, fine graded, had the first application of pre-emergent weed control applied per the manufacturer's recommendations, and be accepted by ENGINEER prior to placing granite.
   2. Place granite over the entire planting area as shown on the Plans, including under all container plant materials located within granite area. Decomposed granite shall not be placed until after container plants have been planted.
   3. After placing, water settle the granite with a light spray and roll with an appropriate device to stabilize the material.
   4. Apply a second application of pre-emergent herbicide in accordance with the manufacturer's recommendations.
   5. Prior to Final Acceptance by the City, at the end of the 90 day maintenance period apply pre-emergent herbicide per the manufacturer's recommendation.

6. All herbicide applications shall be done by a certified applicator licensed by the State of Arizona.

3.4 FIELD QUALITY CONTROL

A. ENGINEER will periodically visit site to observe and report on Work in progress.

B. Advanced Notices: Give the ENGINEER the following advanced notices:
   1. Product delivery schedule: 48 hours.
   2. For inspection of grading, landscape layout, plants, and planting: 48 hours.
   3. For inspection to establish Substantial Completion / Start of Maintenance period: 48 hours.
   4. For Final Acceptance: 48 hours.
   5. Upon ENGINEER'S acceptance of maintenance responsibilities: Two weeks.
   6. Upon expiration of warranty period: One week.

C. Correct items listed in ENGINEER'S report.

3.5 ADJUSTING AND CLEANING

A. Keep pavement clean and work area in orderly condition.

B. Broom, hose, or scrub affected areas as directed by the ENGINEER.

C. Remove all debris, excess materials, and trash generated by landscape operations and legally dispose of off-site.

3.6 PROTECTION

A. Protect existing improvements and landscape work from damage due to landscape installation, operations of other CONTRACTORS, and trespassers.

B. Provide protective equipment and safety devices as required by State and local codes, laws, and ordinances.

C. Maintain protection during installation and maintenance periods as required.

D. Repair or replace CONTRACTOR damaged work as directed by the ENGINEER at no additional cost to City.

3.7 PRE-MAINTENANCE INSPECTION:

A. A pre-maintenance inspection will be performed upon Substantial Completion of all Work in this Section. The CONTRACTOR shall notify the ENGINEER within five days of requested inspection to arrange schedule. The CONTRACTOR, ENGINEER, and other parties as directed by the ENGINEER shall be present at the

inspection. The ENGINEER shall issue the effective start date for the 90 day maintenance period.

B. Work requiring corrective action in the judgment of the ENGINEER shall be performed within five days after the pre-maintenance inspection. Corrective work and materials replacement shall be by the CONTRACTOR with no additional cost to the City in accordance with the Project Plans and Specifications. When inspected Work does not comply with requirements, replace rejected work and continue specified maintenance until reinspected by the ENGINEER and accepted. Remove rejected material promptly from the site.

3.8 MAINTENANCE AND PLANT ESTABLISHMENT

A. Maintain plants for 90 days from date of Final Acceptance.

B. Maintenance includes ensuring plants are properly watered, adjusting tree stakes, fertilizing, pruning, removal of debris and trash, repairing erosion, replacing rejected plants, resetting plants that have settled, spraying for insects, and weed eradication.

3.9 FINAL MAINTENANCE INSPECTION AND ACCEPTANCE

A. At the end of the 90 day maintenance period, a final maintenance inspection will be performed.

B. At the time of the final maintenance inspection, the CONTRACTOR shall have all planting areas under this Contract neatly cultivated and free of weeds. Plant basins shall be in good repair. All plants shall be alive and healthy.

C. If, after the inspection, the ENGINEER determines that all Work has been completed in accordance with the Plans and Specifications, and all plants are alive and healthy, he will issue to the CONTRACTOR a written notice of acceptance of the landscape and commencement of the one year warranty period.

D. Work requiring corrective action or replacement shall be performed within 10 days after the final inspection. Replacement materials and corrective work shall be done at no cost to the City, in accordance with the Project Plans and Specifications. Maintain corrected work until reinspected and accepted by the ENGINEER.

E. Replacements made during the one year warranty period shall be made within 10 days of written notification by the City in accordance with the Project Plans and Specifications.

++ END OF SECTION ++

SECTION 02500

ASPHALT PAVEMENT

PART 1 - GENERAL

1.1 SUMMARY

A. This Section covers the asphalt concrete pavement, asphalt concrete overlay, and concrete curb.

B. Removal of existing pavement shall be at locations as shown on the Plans. The waste material shall be disposed of at approved locations obtained by the CONTRACTOR at no additional cost to the OWNER.

1.2 RELATED SECTIONS

A. Section 02050, Demolitions.

B. Section 02315, Earthwork, Excavation, and Backfill.

1.3 SUBMITTALS

A. Asphalt concrete, aggregate base and concrete curb:
   1. Letters of Certification of Compliance on materials, equipment, etc.
   2. Final Certified Drawings showing outline dimensions, foundation layout or mounting information, and other pertinent dimensions.
   3. Material gradation, design mix, job mix formula, and/or material analysis.

B. Shop Drawings: Submit for approval the following:
   1. A copy of this specification section, with addendum updates included, and all referenced and applicable sections, with addendum updates included, with each paragraph check-marked to indicate specification compliance or marked to indicate requested deviations from specification requirements. Check marks (✓) shall denote full compliance with a paragraph as a whole. If deviations from the specifications are indicated, and therefore requested by the CONTRACTOR, each deviation shall be underlined and denoted by a number in the margin to the right of the identified paragraph, referenced to a detailed written explanation of the reasons for requesting the deviation. The ENGINEER shall be the final authority for determining acceptability of requested deviations. The CONTRACTOR shall furnish equipment and/or services as specified if an exception and/or deviation is rejected. The remaining portions of the paragraph not underlined will signify compliance on the part of the CONTRACTOR with the specifications. Failure to include a copy of the marked-up specification sections, along with justification(s) for any requested deviations to the

specification requirements, with the submittal shall be sufficient cause for rejection of the entire submittal with no further consideration.

2. The CONTRACTOR shall submit the preventive maintenance information package as part of the shop drawing submittal package to the ENGINEER for review and approval. **SHOP DRAWING SUBMITTAL PACKAGE WILL NOT BE APPROVED WITHOUT ACCEPTANCE OF PREVENTIVE MAINTENANCE INFORMATION.**

PART 2 - PRODUCTS

2.1 ASPHALT CONCRETE

A. Asphalt concrete shall conform to the MAG Standard Specification Section 710; Asphalt Concrete.

B. Asphalt concrete shall be 19 mm surface course.

2.2 AGGREGATE BASE

A. Aggregate base shall conform to the MAG Standard Specification Section 702; Base Materials.

2.3 CONCRETE CURB

A. Concrete curb shall be constructed of Class "B" concrete as defined in MAG Standard Specification Section 725.

B. Concrete curbs shall conform to details called out on the Drawings.
   1. Vertical Curb and Gutter: MAG Detail 220 (Type A), H = 6-inches, 1/2-inch Batter.
   2. Roll Curb and Gutter: MAG Detail 220 (Type C), H = 4 inches, 1/2-inch Batter.
   3. Roll Curb and Gutter: MAG Detail 220 (Type D), H = 3-1/2 inches, 1/2-inch Batter.
   4. Ribbon Curb: MAG Detail 220 (Type B).

2.4 SLURRY SEAL

A. Per MAG Section 332.

PART 3 - EXECUTION

3.1 ASPHALT CONCRETE PAVING

A. Asphalt concrete paving shall be constructed per MAG Standard Specifications Section 321 - Placement of Construction of Asphalt Concrete Paving.

B. The 4-inch asphalt concrete paving shall be placed in one pass.

C. Where existing pavement is to be removed for new construction, saw cut existing pavement and replace per MAG Standard Specifications Section 336 - Pavement Matching and Surface Replacement.

D. Where new pavement meets existing pavement, the connection shall match the existing pavement's elevation and conform to MAG Standard Specifications Section 336 - Pavement Matching and Surface Replacement.

E. All new asphalt pavements shall be slurry sealed.

3.2 CONCRETE CURB AND GUTTER/ROLLED CURB

A. Concrete curb shall be placed per MAG Standard Specifications Section 340 - Concrete Curb, Gutter, Sidewalk, Driveway, and Alley Entrance.

B. Where new curb meets existing curb, the connection shall conform to the existing curb elevation.

3.3 AGGREGATE BASE

A. Aggregate base shall be placed per MAG Standard Specifications Section 310 – Placement and Construction of Aggregate Base Course.

B. The aggregate base shall be placed in two 3-inch passes.

++ END OF SECTION ++

SECTION 02580

PAVEMENT MARKINGS

PART 1 - GENERAL

1.1 SUMMARY

A. This Section covers pavement marking requirements for striping, text, and graphics.

1.2 RELATED SECTIONS

A. Section 02050, Demolitions.

B. Section 02315, Earthwork, Excavation, and Backfill.

C. Section 02500, Asphalt Pavement.

D. Section 02751, Portland Cement Concrete Paving.

1.3 SUBMITTALS

A. Descriptive submittals shall be made in accordance with the Data Reference Symbols defined in Section 01300, Submittals.
   1. Product data.
   2. Manufacturer's instructions.

B. Shop Drawings: Submit for approval the following:
   1. A copy of this specification section, with addendum updates included, and all referenced and applicable sections, with addendum updates included, with each paragraph check-marked to indicate specification compliance or marked to indicate requested deviations from specification requirements. Check marks (✓) shall denote full compliance with a paragraph as a whole. If deviations from the specifications are indicated, and therefore requested by the CONTRACTOR, each deviation shall be underlined and denoted by a number in the margin to the right of the identified paragraph, referenced to a detailed written explanation of the reasons for requesting the deviation. The ENGINEER shall be the final authority for determining acceptability of requested deviations. The CONTRACTOR shall furnish equipment and/or services as specified if an exception and/or deviation is rejected. The remaining portions of the paragraph not underlined will signify compliance on the part of the CONTRACTOR with the specifications. Failure to include a copy of the marked-up specification sections, along with justification(s) for any requested deviations to the specification requirements, with the submittal shall be sufficient cause for rejection of the entire submittal with no further consideration.

2. The CONTRACTOR shall submit the preventive maintenance information package as part of the shop drawing submittal package to the ENGINEER for review and approval. **SHOP DRAWING SUBMITTAL PACKAGE WILL NOT BE APPROVED WITHOUT ACCEPTANCE OF PREVENTIVE MAINTENANCE INFORMATION.**

PART 2 - PRODUCTS

2.1 MANUFACTURERS

A. Pavement Marking Paint: One of the following manufacturers or equal.
   1. Dunn-Edwards Corporation, Los Angeles, CA.
   2. Glidden Company, Cleveland, OH.
   3. Sherwin Williams Company, Cleveland, OH.

2.2 MATERIALS

A. Pavement Marking Paint, Latex Based: One of the following or equal:
   1. Dunn Edwards: No. W 801, Vin-L-Stripe, epoxy modified acrylic-latex-based paint.
   2. Glidden: 63240 Series, UltraHide Latex Traffic Paint.
   3. Sherwin Williams: Set fast acrylic water borne traffic marking paint.

B. Pavement Marking Paint, Alkyd Based: One of the following or equal:
   1. Glidden: 63220 Series, UltraHide Traffic Paint.
   2. Sherwin Williams: Promar Alkyd Traffic Marking Paint.

C. Masonry Conditions (if applicable): The following or equal:
   1. Sherwin Williams: B46WZ1000 Masonry Conditioner.

D. Colors:
   1. Text: White.
   2. Parking Dividers: White.
   3. No Parking Zone: Yellow.
   4. Paint Curb, where required: Red.
   5. Directional Arrows: White.
   6. Lane Striping: Yellow.
   7. Speed Bump: White.

PART 3 - EXECUTION

3.1 CONDITIONS

A. Apply Pavement Markings When:

1. Pavement is thoroughly clean and dry.
2. Ambient temperature is above 40º F.
3. Precipitation is not expected within 12 hours of completion of application.

3.2 PREPARATION

A. Remove dirt, oil, grease, and other materials which may affect paint adhesion.

B. Apply masonry conditioner on weathered or sandblasted surfaces, brick, or stucco.

3.3 APPLICATION

A. Apply paint at package consistency whenever possible. Thin paint as little as possible.

B. Apply paint with specifically designed and manufactured equipment for pavement marking. Provide:
   1. Uniform straight edges without overspray.
   2. 4-inch wide lines, unless indicated otherwise.

C. Apply paint to obtain thickness recommended by paint manufacturer.

D. Paint traffic control markings, including striping, directional arrows, cross walks and lettering and handicap striping and symbols as indicated on the Drawings in accordance with all local governing agency standards. Use stencils for arrows, lettering, and symbols.

E. Apply 700 square inch international handicap symbol on pavement surface where indicated on the Drawings.
   1. On asphalt surfaces, paint blue symbol on white square.
   2. On concrete surface, paint white symbol on blue square.

3.4 QUALITY ASSURANCE

A. Applicator Qualifications: Minimum five years experience of applying traffic markings with satisfactory performance record.

B. Regulatory Requirements: Comply with applicable requirements of governmental agencies having jurisdiction, including airborne emissions and industrial waste disposal requirements.

++ END OF SECTION ++

SECTION 02751

PORTLAND CEMENT CONCRETE PAVING

PART 1 - GENERAL

1.1 SUMMARY

A. Exterior concrete sidewalks, stoops, and ramps.

1.2 REFERENCE STANDARDS

A. ACI 211.1, Standard Practice for Selecting Proportions for Normal, Heavyweight, and Mass Concrete; American Concrete Institute International; 1991 (Reapproved 2002).

B. ACI 301, Specifications for Structural Concrete for Buildings; American Concrete Institute International; 2005.

C. ACI 304R, Guide for Measuring, Mixing, Transporting, and Placing Concrete; American Concrete Institute International; 2000.

D. ACI 305R, Hot Weather Concreting; American Concrete Institute International; 1999.

E. ACI 306R, Cold Weather Concreting; American Concrete Institute International; 1988 (Reapproved 2002).

F. ASTM C33, Standard Specification for Concrete Aggregates; 2003.

G. ASTM C39/C39M, Standard Test Method for Compressive Strength of Cylindrical Concrete Specimens; 2005.

H. ASTM C94/C94M, Standard Specification for Ready-Mixed Concrete; 2005.

I. ASTM C150, Standard Specification for Portland Cement; 2005.

J. ASTM C173/C173M, Standard Test Method for Air Content of Freshly Mixed Concrete by the Volumetric Method; 2001.

K. ASTM C260, Standard Specification for Air-Entraining Admixtures for Concrete; 2001.

L. ASTM C309, Standard Specification for Liquid Membrane-Forming Compounds for Curing Concrete; 2003.

M. ASTM C494/C494M, Standard Specification for Chemical Admixtures for Concrete; 2005a.

N. ASTM C618, Standard Specification for Coal Fly Ash and Raw or Calcined Natural Pozzolan for Use in Concrete; 2005.

O. ASTM C685/C685M, Standard Specification for Concrete Made by Volumetric Batching and Continuous Mixing; 2001.

P. ASTM D1751, Standard Specification for Preformed Expansion Joint Filler for Concrete Paving and Structural Construction (nonextruding and Resilient Bituminous Types); 2004.

1.3 SUBMITTALS

A. See Section 01300, Submittals, for submittal procedures.

B. Product Data: Provide data on joint filler, admixtures, curing compound, and removable joint cap.

C. Shop Drawings: Submit for approval the following:
   1. A copy of this specification section, with addendum updates included, and all referenced and applicable sections, with addendum updates included, with each paragraph check-marked to indicate specification compliance or marked to indicate requested deviations from specification requirements. Check marks (✓) shall denote full compliance with a paragraph as a whole. If deviations from the specifications are indicated, and therefore requested by the CONTRACTOR, each deviation shall be underlined and denoted by a number in the margin to the right of the identified paragraph, referenced to a detailed written explanation of the reasons for requesting the deviation. The ENGINEER shall be the final authority for determining acceptability of requested deviations. The CONTRACTOR shall furnish equipment and/or services as specified if an exception and/or deviation is rejected. The remaining portions of the paragraph not underlined will signify compliance on the part of the CONTRACTOR with the specifications. Failure to include a copy of the marked-up specification sections, along with justification(s) for any requested deviations to the specification requirements, with the submittal shall be sufficient cause for rejection of the entire submittal with no further consideration.
   2. The CONTRACTOR shall submit the preventive maintenance information package as part of the shop drawing submittal package to the ENGINEER for review and approval. **SHOP DRAWING SUBMITTAL PACKAGE WILL NOT BE APPROVED WITHOUT ACCEPTANCE OF PREVENTIVE MAINTENANCE INFORMATION.**

1.4 QUALITY ASSURANCE

A. Perform work in accordance with ACI 301.

B. Obtain cementitious materials from same source throughout.

C. Follow recommendations of ACI 305R when concreting during hot weather.

D. Follow recommendations of ACI 306R when concreting during cold weather.

1.5 ENVIRONMENTAL REQUIREMENTS

A. Do not place concrete when base surface temperature is less than 40º F, or surface is wet or frozen.

PART 2 - PRODUCTS

2.1 FORM MATERIALS

A. Form Materials: Conform to ACI 301.

B. Joint Filler: Non-extruding, resilient asphalt impregnated fiberboard or felt, complying with ASTM D1751, 1/2-inch thick and full depth of slab less 1/2-inch.

2.2 REINFORCEMENT

A. Unless indicated on the Drawings, reinforcement is not required for exterior paving.

2.3 CONCRETE MATERIALS

A. Cement: ASTM C150 Air-Entraining Type IA or Air-Entraining Type IIA Portland type, grey color.

B. Fine and Coarse Mix Aggregates: ASTM C33.

C. Fly Ash: ASTM C618, Class F.

D. Calcined Pozzolan: ASTM C618, Class N.

E. Water: Clean, and not detrimental to concrete.

F. Air Entrainment Admixture: ASTM C260.

G. Chemical Admixtures: ASTM C494/C494M, Type A; Water Reducing, Type C; Accelerating, and Type G; Water Reducing, High Range and Retarding.

2.4 ACCESSORIES

A. Curing Compound: ASTM C309, Type Design Professional, Class A.

B. Sealant at Joint Filler: Type ES-2 as specified in Section 07900, Joint Sealers.

C. Removable Joint Cap: Extruded plastic, 10 foot lengths; size to match width of joint filler.
   1. Product and Manufacturer: Sealtight Snap-Cap, W.R. Meadows: www.wrmeadows.com or equal.

2.5 CONCRETE MIX DESIGN

A. Proportioning Normal Weight Concrete: Comply with ACI 211.1 recommendations.

B. Concrete Strength: Establish required average strength for each type of concrete on the basis of field experience or trial mixtures, as specified in ACI 301.
   1. For trial mixtures method, employ independent testing agency acceptable to ENGINEER for preparing and reporting proposed mix designs.

C. Admixtures: Add acceptable admixtures as recommended in ACI 211.1 and at rates recommended by manufacturer.

D. Concrete Properties:
   1. Compressive Strength, when tested in accordance with ASTM C39/C39M at 28 days: 4,000 psi.
   2. Fly Ash Content: Maximum 25% - 30% of cementitious materials by weight.
   3. Calcined Pozzolan Content: Maximum 10% of cementitious materials by weight.
   4. Silica Fume Content: Maximum 5% of cementitious materials by weight.
   5. Cement Content: Minimum 429 lb per cubic yard.
   6. Water-Cementitious Ratio: Maximum 45% by weight.
   7. Total Air Content: 6% ±1%, determined in accordance with ASTM C173/C173M.
   8. Maximum Aggregate Size: 1-inch.

2.6 MIXING

A. On Project Site: Mix in drum type batch mixer, complying with ASTM C685. Mix each batch not less than 1-1/2 minutes and not more than 5 minutes.

B. Transit Mixers: Comply with ASTM C94/C94M.

PART 3 - EXECUTION

3.1 EXAMINATION

A. Verify compacted subgrade is acceptable and ready to support paving and imposed loads.

B. Verify gradients and elevations of base are correct.

3.2 PREPARATION

A. Moisten base to minimize absorption of water from fresh concrete.

3.3 FORMING

A. Place and secure forms to correct location, dimension, profile, and gradient.

B. Assemble formwork to permit easy stripping and dismantling without damaging concrete.

C. Place joint filler vertical in position, in straight lines. Secure to formwork during concrete placement.

3.4 PLACING CONCRETE

A. Place concrete in accordance with ACI 304R.

B. Ensure inserts, embedded parts, formed joints are not disturbed during concrete placement.

C. Place concrete continuously over the full width of the panel and between predetermined construction joints. Do not break or interrupt successive pours such that cold joints occur.

3.5 JOINTS

A. Place 1/2-inch wide expansion joints at the following locations:
   1. To separate paving from vertical surfaces and other components
   2. At other locations indicated on the drawings.
      a. If other locations are not indicated, locate at maximum 20 foot intervals.
   3. Form joints with joint filler extending from bottom of pavement to within 1/2-inch of finished surface.
   4. Secure to resist movement by wet concrete.
   5. Install joint filler with removable joint caps. Set top of removable joint cap flush with finished paving surface. Extend joint filler to bottom of paving.
   6. Remove joint caps when paving is cured in accordance with manufacturer's recommendations. Install sealant in joint in accordance with Section 07900, Joint Sealers.

B. Provide scored joints:
   1. At locations identified as control joints.
   2. If locations are not indicated, locate at 5 foot intervals.

3.6 FINISHING

A. All paving unless noted otherwise: Light broom, texture perpendicular to pavement direction.

B. Place curing compound on exposed concrete surfaces immediately after finishing. Apply in accordance with manufacturer's instructions.

3.7 JOINT SEALING

A. See Section 07900, Joint Sealers, for joint sealer requirements.

3.8 TOLERANCES

A. Maximum Variation of Surface Flatness: 1/4-inch in 10 feet.

B. Maximum Variation From True Position: 1/4-inch.

3.9 FIELD QUALITY CONTROL

A. An independent testing agency will perform field quality control tests, as specified in Section 01400, Quality Control.
   1. Provide free access to concrete operations at project site and cooperate with appointed firm.
   2. Submit proposed mix design of each class of concrete to inspection and testing firm for review prior to commencement of concrete operations.
   3. Tests of concrete and concrete materials may be performed at any time to ensure conformance with specified requirements.

B. Compressive Strength Tests: ASTM C39/C39M. For each test, mold and cure three concrete test cylinders. Obtain test samples for every 50 cu yd or less of concrete placed.
   1. Take one additional test cylinder during cold weather concreting, cured on job site under same conditions as concrete it represents.

C. Maintain records of placed concrete items. Record date, location of pour, quantity, air temperature, and test samples taken.

3.10 PROTECTION

A. Immediately after placement, protect pavement from premature drying, excessive hot or cold temperatures, and mechanical injury.

++ END OF SECTION ++

SECTION 03100

CONCRETE FORMWORK

1.1 GENERAL

1.2 DESCRIPTION

A. Scope:
   1. CONTRACTOR shall provide all labor, materials, equipment, and incidentals as shown, specified, and required to furnish and install concrete formwork. The Work also includes:
      a. Providing openings in formwork to accommodate the Work under this and other Sections and building into the formwork all items such as sleeves, anchor bolts, inserts, and all other items to be embedded in concrete for which placement is not specifically provided under other sections.

B. Coordination:
   1. Review installation procedures under other sections and coordinate the installation of items that must be installed with the formwork.
   2. Coordinate formwork specifications herein with the requirements for finished surfaces specified in Section 03300, Cast-In-Place Concrete.

C. Related Sections:
   1. Section 03200, Concrete Reinforcement.
   2. Section 03251, Concrete Joints.
   3. Section 03300, Cast-In-Place Concrete.

1.3 QUALITY ASSURANCE

A. Standard Specifications and Details:
   1. CONTRACTOR shall conform to all applicable requirements of Section No. 505 of the Uniform Standard Specifications for Public Works Construction by the Maricopa Association of Governments (MAG) as supplemented by the City of Chandler. Where there is conflict between MAG Standard Specifications as supplemented by the City of Chandler and this Specification, provisions of this Specification shall govern.
   2. CONTRACTOR shall examine the substratum and the conditions under which concrete framework is to be performed and notify the ENGINEER, in writing, of unsatisfactory conditions. Do not proceed with the Work until unsatisfactory conditions have been corrected in a manner acceptable to the ENGINEER.

B. Reference Standards: Comply with applicable provisions and recommendations of the following, except as otherwise shown or specified:
   1. ACI 301, Specifications for Structural Concrete for Buildings.

2. ACI 347, Guide for Concrete Formwork.
3. US Product Standard, PS-1; latest edition.

C. Allowable Tolerances:
1. Construct formwork to provide completed concrete surfaces complying with tolerances specified in ACI 347, Chapter 3.3, except as otherwise specified.

D. All items for permanent or temporary facilities shall be used in accordance with manufacturers' instructions.

E. Stairways shall comply per IBC Section: 1011. Provide complete plans, sections or details addressing all requirements on building plans as they apply to proposed building conditions. Address following requirements as each condition applies:
1. Stairway width shall comply per Section: 1011.2 requirements.
2. Stairway headroom shall comply per Section: 1011.3 requirements.
3. Stairway treads and risers shall comply per Section: 1011.5 requirements.
4. Stairway dimensional uniformity shall comply per Section: 1011.5.4 requirements.
5. Stairway landings shall comply per Section: 1011.6.
6. Stairway construction shall comply per Section: 1011.7.
7. Stairway vertical rise shall comply per Section: 1011.8.

1.4 SUBMITTALS

A. Shop Drawings:
1. Submit for approval the following:
a. Fabrication and erection drawings of finished concrete surfaces. Show the general construction of forms including jointing, special formed joints or reveals, location and pattern of form tie placement, and other items which affect the finished concrete visually. ENGINEER'S review will be for general applications and features only. Design of formwork for structural stability and sufficiency is CONTRACTOR'S responsibility.
b. Taper tie installation, removal, and hole repair materials and procedures.
c. CONTRACTOR shall submit an electronic copy per Specification Section 01332, Shop Drawing Procedures. Text shall be in electronic ASCII format. Drawings and figures shall be in Version 2012 or newer AutoCAD ".dwg," or pdf ".pdf" format.
d. A copy of this specification section, with addendum updates included, and all referenced and applicable sections, with addendum updates included, with each paragraph check-marked to indicate specification compliance or marked to indicate requested deviations from specification requirements. Check marks (□) shall denote full compliance with a paragraph as a whole. If deviations from the specifications are indicated, and therefore requested by the CONTRACTOR, each deviation shall be underlined and denoted by a number in the margin to the right of the identified paragraph, referenced to a detailed written explanation of the

reasons for requesting the deviation. The ENGINEER shall be the final authority for determining acceptability of requested deviations. The CONTRACTOR shall furnish equipment and/or services as specified if an exception and/or deviation is rejected. The remaining portions of the paragraph not underlined will signify compliance on the part of the CONTRACTOR with the specifications. Failure to include a copy of the marked-up specification sections, along with justification(s) for any requested deviations to the specification requirements, with the submittal shall be sufficient cause for rejection of the entire submittal with no further consideration.

2. Submit for information purposes the following:
   a. Copies of manufacturer's data and installation instructions for proprietary materials, including form coatings, manufactured form systems, ties and accessories.

1.5 PRODUCT DELIVERY, STORAGE, AND HANDLING

A. On delivery to job site, place materials in area protected from weather.

B. Store materials above ground on framework or blocking. Cover wood for forms with protective waterproof covering. Provide for adequate air circulation or ventilation. Store materials in accordance with the manufacturers' recommendations.

C. Handle materials to prevent damage in accordance with the manufacturers' recommendations.

PART 2 - PRODUCTS

2.1 FORM MATERIALS

A. Forms for Smooth Finish Concrete:
   1. Unless otherwise shown or specified, construct formwork for smooth concrete surfaces with plywood, metal, metal-framed plywood-faced, or other panel type materials acceptable to ENGINEER, to provide continuous, straight, smooth as-cast surfaces with no wood grain or other surface texture imparted by the formwork. Furnish in largest practical sizes to minimize number of joints and to conform to joint system shown or specified. Provide form material with sufficient thickness to withstand pressure of newly placed concrete without bow or deflection.

B. Forms for Standard Finish Concrete:
   1. Form concrete surfaces designated to have a standard formed finish with plywood, lumber, metal, or other acceptable material. Provide lumber that is dressed on at least two edges and one side.

C. Cylindrical Columns and Supports:
   1. Form round section members with paper or fiber tubes, constructed of laminated plies using water resistant type adhesive with wax-impregnated exterior for weather and moisture protection. Provide units with sufficient wall thickness to resist loads imposed by wet concrete without deformation.
      a. Provide manufacturer's seamless units to minimize spiral gaps or seams.
   2. Fiberglass or steel forms may be used for cylindrical columns, if approved by ENGINEER.

D. Form Ties:
   1. Provide factory fabricated, removable or snapoff metal form ties, designed to prevent form deflection, and to prevent spalling of concrete surfaces upon removal. Materials used for tying forms will be subject to approval of ENGINEER.
   2. Unless otherwise shown, provide ties so that portion remaining within concrete after removal of exterior parts is at least 1.5-inch from the outer concrete surface. Unless otherwise shown, provide form ties that will leave a hole no larger than 1 inch diameter in the concrete surface.
   3. Ties for exterior walls, walls below grade, and walls subject to hydrostatic pressure shall have waterstops.
   4. All ties shall leave a uniform, circular hole when forms are removed.
   5. Provide wood or plastic cones for ties where concrete is exposed in the finish structure and in the interior of tanks.
   6. Wire ties are not acceptable.

E. Forms Coatings:
   1. Provide commercial formulation form-coating compounds that will not bond with, stain, nor adversely affect concrete surfaces, and will not impair subsequent treatment of concrete surfaces requiring bond or adhesion, nor impede the wetting of surfaces to be cured with water or curing compounds. For concrete surfaces which will be in contact with potable water, the form coating shall be a mineral oil base coating.

2.2 DESIGN OF FORMWORK

A. Design of formwork shall be sealed by an Engineer registered in the State of Arizona.

B. Design, erect, support, brace, and maintain formwork so that it shall safely support vertical and lateral loads that might be applied, until such loads can be supported by the concrete structure. Carry vertical and lateral loads to ground by formwork system or in-place construction that has attained adequate strength for this purpose. Construct formwork so that concrete members and structures are of correct size, shape, alignment, elevation, and position.

C. Design forms and falsework to include values of live load, dead load, weight of moving equipment operated on formwork, concrete mix, height of concrete drop, vibrator frequency,

ambient temperature, foundation pressures, stresses, lateral stability, and other factors pertinent to safety of structure during construction.

B. Design, erect, support, brace, and maintain formwork so that it shall safely support vertical and lateral loads that might be applied, until such loads can be supported by the concrete structure. Carry vertical and lateral loads to ground by formwork system or in-place construction that has attained adequate strength for this purpose. Construct formwork so that concrete members and structures are of correct size, shape, alignment, elevation, and position.

C. Design forms and falsework to include values of live load, dead load, weight of moving equipment operated on formwork, concrete mix, height of concrete drop, vibrator frequency, ambient temperature, foundation pressures, stresses, lateral stability, and other factors pertinent to safety of structure during construction.

D. Provide shores and struts with positive means of adjustment capable of taking up formwork settlement during concrete placing operations, using wedges or jacks or a combination thereof. Provide trussed supports when adequate foundations for shores and struts cannot be secured.

E. Support form facing materials by structural members spaced sufficiently close to prevent significant deflection, in accordance with ACI 117. Fit forms placed in successive units for continuous surfaces to accurate alignment, free from irregularities and within allowable tolerances. For long span members without intermediate supports, provide camber in formwork as required for anticipated deflections resulting from weight and pressure of fresh concrete and construction loads.

F. Design formwork to be readily removable without impact, shock, or damage to concrete surfaces and adjacent materials.

G. Provide formwork sufficiently tight to prevent leakage of cement paste during concrete placement. Solidly butt joints and provide backup material at joints as required to prevent leakage and fins.

H. Omit side forms of footings and place concrete directly against excavation only when formally requested by CONTRACTOR, in writing, and accepted by ENGINEER, in writing. When omission of forms is accepted, provide additional concrete required beyond the minimum design profiles and dimensions of the footings as detailed. No additional compensation will be made to CON-TRACTOR for additional concrete required.

PART 3 - EXECUTION

3.1 INSPECTION

A. CONTRACTOR and his installer shall examine the substrate and the conditions under which Work is to be performed and notify ENGINEER, in writing, of unsatisfactory conditions. Do not proceed with the Work until unsatisfactory conditions have been corrected in a manner acceptable to ENGINEER.

3.2 FORM CONSTRUCTION

A. Construct forms, complying with the requirements of ACI 347 to the exact sizes, shapes, lines, and dimensions shown, as required to obtain accurate alignment, location, and grades; to tolerances specified; and to obtain level and plumb work in finish structures. Provide for openings, offsets, keyways, recesses, moldings, rustications, reglets, chamfers, blocking, screeds, bulkheads, anchorages and inserts, and other features required. Use selected materials to obtain required finishes. Finish shall be as determined by approved mock-up or sample panel, if specified.

B. Fabricate forms for easy removal without damaging concrete surfaces. Provide crush plates or wrecking plates where stripping may damage cast concrete surfaces. Provide top forms for inclined surfaces where the slope is too steep to place concrete with bottom forms only. Kerf wood inserts for forming keyways, reglets, recesses, and the like to prevent swelling and ensure ease of removal.

C. Provide temporary openings where interior area of formwork is inaccessible for cleanout, for inspection before concrete placement, and for placement of concrete. Brace temporary closures and set tightly to forms to prevent loss of concrete paste. Locate temporary openings on forms in locations as inconspicuous as possible, consistent with requirements of the Work. Form intersecting planes of openings to provide true, clean-cut corners, with edge grain of plywood not exposed as form for concrete.

D. Falsework:
   1. Erect falsework and support, brace, and maintain it to safely support vertical, lateral and asymmetrical loads applied until such loads can be supported by in-place concrete structures. Construct falsework so that adjustments can be made for take-up and settlement.
   2. Provide wedges, jacks, or camber strips to facilitate vertical adjustments. Carefully inspect falsework and formwork during and after concrete placement operations to determine abnormal deflection or signs of failure; make necessary adjustments to produce finished Work of required dimensions.

E. Forms for Smooth Finish Concrete:

1. Do not use metal cover plates for patching holes or defects in forms.
2. Provide sharp, clean corners at intersecting planes, without visible edges or offsets. Back joints with extra studs or girts to maintain true, square intersections.
3. Use extra studs, walers, and bracing to prevent bowing of forms between studs and to avoid bowed appearance in concrete. Do not use narrow strips of form material that will produce bow.
4. Assemble forms so they may be readily removed without damage to exposed concrete surfaces.
5. Form molding shapes, recesses, rustication joints and projections with smooth-finish materials, and install in forms with sealed joints to prevent displacement.

F. Corner Treatment:
1. Form exposed corners of beams, walls, foundations, bases, and columns to produce smooth, solid, unbroken lines, except as otherwise shown. Except as specified below for reentrant or internal corners, exposed corners shall be chamfered.
2. Form chamfers with 3/4-inch by 3/4-inch strips, unless otherwise shown, accurately formed and surfaced to produce uniformly straight lines and tight edge joints. Use rigid PVC chamfers for all architecturally formed concrete. Extend terminal edges to required limit and miter chamfer strips at changes in direction.
3. Reentrant or internal corners and unexposed corners shall be formed chamfered.

G. Joints:
1. Refer to Section 03251, Concrete Joints, of these Specifications for treatment of joints. Locate as shown and specified.

H. Openings and Built-In Work:
1. Provide openings in concrete formwork shown or required by other Sections or other Contracts. Refer to Paragraph 1.1.B. herein for the requirements of coordination.
2. Accurately place and securely support items to be built into forms.

I. Sealing Formwork:
1. All formwork joints shall be tight fitting or otherwise sealed to prevent loss of cement paste.
2. All formwork, which rests against concrete surfaces, shall be provided with a compressible gasket material between the concrete and edge of form to fill any irregularities and create a tight seal.

J. Cleaning and Tightening:
1. Thoroughly clean forms and adjacent surfaces to receive concrete. Remove chips, wood, sawdust, dirt, or other debris just before concrete is to be placed.

Retighten forms immediately after concrete placement as required to eliminate mortar leaks.

3.3 FORM COATINGS

A. Coat form contact surfaces with a non-staining form coating compound before reinforcement is placed. Do not allow excess form coating material to accumulate in the forms or to come into contact with surfaces which will be bonded to fresh concrete. Apply in compliance with manufacturer's instructions.

B. Coat steel forms with a non-staining, rust-preventative form oil or otherwise protect against rusting. Rust-stained steel formwork is not acceptable.

3.4 INSTALLATION OF EMBEDDED ITEMS

A. Set and build into the formwork, anchorage devices, and other embedded items shown, specified, or required by other Sections and other contracts. Refer to Paragraph 1.1.B. herein for the requirements of coordination. Use necessary setting drawings, diagrams, instructions, and directions.

B. Edge Forms and Screeds Strips for Slabs:
   1. Set edge forms or bulkheads and intermediate screed strips for slabs to obtain required elevations and contours in the finished slab surface. Provide and secure units to support screeds.

3.5 VOID FORMS

A. Install void forms where shown on the Drawings and to the thickness indicated in accordance with the manufacturer’s recommendations.

B. Where void form is indicated, it shall be placed, to the grades and elevations shown, over an even, well compacted subgrade to form a continuous void space under the entire extent of the slab or grade beam.

C. For structural slab applications, 1/8-inch thick masonite or plywood sheet shall be placed over the void form. Void forms shall be placed in the largest pieces practical and shall be secured in place.

D. Properly surround and void around the upper portion of all drilled piers at the intersection of the slab, grade beam, or pier cap using a premanufactured, non-field cut sealed void form with a curved, radial, vertical edge adjacent to the drilled pier.

E. Void forms shall remain dry and undamaged prior to concrete placement. Damaged pieces shall be replaced prior to concrete placement. All joints and exposed ends shall be sealed to prevent leakage of concrete into the void space.

3.6 FIELD QUALITY CONTROL

A. Before concrete placement, CONTRACTOR shall check the formwork, including tolerances, lines, ties, tie cones, and form coatings. CONTRACTOR shall make corrections and adjustments to ensure proper size and location of concrete members and stability of forming systems.

B. During concrete placement CONTRACTOR shall check formwork and related supports to ensure that forms are not displaced and that completed Work shall be within specified tolerances.

C. If CONTRACTOR finds that forms are unsatisfactory in any way, either before or during placing of concrete, placement of concrete shall be postponed or stopped until the defects have been corrected, and reviewed by ENGINEER.

3.7 REMOVAL OF FORMS

A. Conform to the requirements of ACI 301, Section 2, and ACI 347, Chapter 3.7, except as specified below.
   1. Removal of Forms and Supports: Continue curing in accordance with Section 03300, Cast-In-Place Concrete, Paragraph 3.7.

	Temperature (° F)			
	Over 70	**60-70**	**50-60**	**Below 50**
a. Walls:	1 day	2 days	3 days	Do not remove forms until site-cured test cylinder develops 65% of 28 day strength.
b. Columns:	2 day	3 days	4 days	
c. Beam Soffits:	4 days	5 days	6 days	
d. Suspended Slabs 5 in. thick or less:	5 days	6 days	7 days	
e. Suspended Slabs over 5 in. thick:	6 days	7 days	7 days	
f. Slabs on grade and foundation edges	1 day	1 day	2 days	

B. Form facing material shall remain in place a minimum of four days after concrete placement, unless otherwise approved by ENGINEER, or specified above.

C. Do not remove supporting forms or shoring until the members have acquired sufficient strength to safely support their weight and the load upon them. Results of suitable control tests may be used as evidence that the concrete has attained sufficient strength.

D. The time for removal of all forms will be subject to ENGINEER'S approval.

E. When high-early strength concrete is specified, a schedule for removal of forms will be developed in the field from the age/strength relationships established for the materials and proportions used by tests in accordance with ACI-301, Section 3.8.

3.8 PERMANENT SHORES

A. Provide permanent shores as defined in ACI 347, Chapter 3.7.

B. Reshores will not be permitted.

3.9 RE-USE OF FORMS

A. Clean and repair surfaces of forms to be re-used in the Work. Split, frayed, delaminated, or otherwise damaged form facing material will not be acceptable. Apply new form coating compound material to concrete contact surfaces as specified for new formwork.

B. When forms are extended for successive concrete placement, thoroughly clean surfaces, remove fins and laitance, and tighten forms to close all joints. Align and secure joints to avoid offsets. Do not use "patched" forms for exposed concrete surfaces. Form surfaces shall be subject to ENGINEER'S approval.

++ END OF SECTION ++

SECTION 03200

CONCRETE REINFORCEMENT

PART 1 - GENERAL

1.1 DESCRIPTION

A. Scope:
   1. CONTRACTOR shall provide all labor, materials, equipment, and incidentals as shown, specified, and required to furnish and install concrete reinforcement.
   2. The extent of concrete reinforcement is shown.
   3. The Work includes fabrication and placement of reinforcement, including bars, ties and supports, and welded wire fabric for concrete, encasements, and fireproofing.

B. Related Section:
   1. Section 03251, Concrete Joints.
   2. Section 03300, Cast-In-Place Concrete.

1.2 QUALITY ASSURANCE

A. Reference Standards: Comply with applicable provisions and recommendations of the following, except as otherwise shown or specified:
   1. ASTM A82, Standard Specification for Steel Wire, Plain, for Concrete Reinforcement.
   2. ASTM A184, Standard Specification for Welded Deformed Steel Bar Mats for Concrete Reinforcement.
   3. ASTM A185, Standard Specification for Steel Welded Wire Fabric, Plain, for Concrete Reinforcement.
   4. ASTM A496, Standard Specification for Steel Wire, Deformed, for Concrete Reinforcement.
   5. ASTM A1064, Standard Specification for Carbon-Steel Wire and Welded Wire Reinforcement, Pland and Deformed, for Concrete.
   6. ASTM A615, Standard Specification for Deformed and Plain Billet-Steel Bars for Concrete Reinforcement.
   7. ASTM A706, Standard Specification for Deformed and Plain Low-Alloy Steel Deformed Bars for Concrete Reinforcement.
   8. ASTM A775, Standard Specification for Epoxy-Coated Steel Reinforcing Bars.
   9. ACI 315, Guide to Presenting Reinforcing Steel Design Details.
   10. ACI 318, Building Code Requirements for Structural Concrete.
   11. ACI 350, Code Requirements for Environmental Engineering Concrete Structures
   12. ACI SP66, Detailing Manual.

13. ANSI/AWS D1.4, Structural Welding Code - Reinforcing Steel.
14. CRSI, Concrete Reinforcing Steel Institute (CRSI) Manual of Standard Practice.

B. Allowable Placing Tolerances: Comply with ACI 318, Chapter 20 - Details of Reinforcement, except as specified in ACI 350, Chapter 7 and below:
   1. Concrete surfaces which are exposed to earth, liquid, weather or bearing on work mat or slabs supporting earth cover: 2-inch minimum coverage.

1.3 SUBMITTALS

A. Shop Drawings: Submit for approval the following:
   1. Manufacturer's specifications and installation instructions for all materials and reinforcement accessories. Comply with the requirements of Section 01332, Shop Drawing Procedures.
   2. Drawings for fabrication, bending, and placement of concrete reinforcement. Comply with ACI 315. For walls, show elevations to a minimum scale of 1/4-inch to one foot. For slabs, show top and bottom reinforcing on separate plan views. Show bar schedules, stirrup spacing, diagrams of bent bars, arrangements and assemblies, as required for the fabrication and placement of concrete reinforcement unless otherwise noted. Splices shall be kept to a minimum. Splices in regions of maximum tension stresses shall be avoided whenever possible.
   3. Drawings detailing the location of all construction and expansion joints as required under Section 03251, Concrete Joints, shall be submitted and approved before Shop Drawings for reinforcing steel are submitted.
   4. Description of reinforcing weld locations and weld procedures.
   5. Refer to and comply with the requirements of Section 01332, Shop Drawing Procedures.
   6. CONTRACTOR shall submit an electronic copy per Specification Section 01332, Shop Drawing Procedures. Text shall be in electronic ASCII format. Drawings and figures shall be in Version 2012 or newer AutoCAD ".dwg," or pdf ".pdf" format.
   7. A copy of this specification section, with addendum updates included, and all referenced and applicable sections, with addendum updates included, with each paragraph check-marked to indicate specification compliance or marked to indicate requested deviations from specification requirements. Check marks (□) shall denote full compliance with a paragraph as a whole. If deviations from the specifications are indicated, and therefore requested by the CONTRACTOR, each deviation shall be underlined and denoted by a number in the margin to the right of the identified paragraph, referenced to a detailed written explanation of the reasons for requesting the deviation. The ENGINEER shall be the final authority for determining acceptability of requested deviations. The CONTRACTOR shall furnish equipment and/or services as specified if an exception and/or deviation is rejected. The remaining portions of the paragraph not underlined will signify compliance on the part of

the CONTRACTOR with the specifications. Failure to include a copy of the marked-up specification sections, along with justification(s) for any requested deviations to the specification requirements, with the submittal shall be sufficient cause for rejection of the entire submittal with no further consideration.

B. Certificates:
   1. Submit one copy of steel producer's certificates of mill analysis, tensile and bend tests for reinforcing steel.
   2. Submit certification of welders and weld procedures for splices in accordance with ANSI/AWS D1.4 requirements.

1.4 DELIVERY, HANDLING, AND STORAGE

A. Deliver concrete reinforcement materials to the site bundled, tagged, and marked. Use metal tags indicating bar size, lengths, and other information corresponding to markings shown on placement diagrams. Comply with the requirements of Section 01651, Transportation and Handling of Materials and Equipment.

B. Store concrete reinforcement material at the site to prevent damage and accumulation of dirt or excessive rust. Store on heavy wood blocking so that no part of it will come in contact with the ground. Comply with the requirements of 01661, Storage of Materials and Equipment.

PART 2 - PRODUCTS

2.1 MATERIALS

A. Reinforcing Bars: ASTM A615 and as follows:
   1. Provide Grade 60 for all bars, unless indicated otherwise.

B. Low Alloy Steel Reinforcing Bars where indicated on drawings and for reinforcing bars that are welded: ASTM A706.

C. Mechanical Couplers: Reinforcement bars may be spliced with a mechanical connection. This connection shall be a full mechanical connection which shall develop in tension or compression, as required, at least 125% of specified yield strength (fy) of the bar in accordance with ACI 318 Section 12.14.3.4. Location of the connections shall be approved by the ENGINEER.

D. Steel Wire: ASTM A82.

E. Welded Smooth Wire Fabric: ASTM A185.
   1. Furnish in flat sheets, not rolls.

F. Headed Deformed Bars (HDB)

1. Provide headed ends of reinforcing bars that are either factory forged, factory welded, or mechanically attached at the jobsite or factory. Headed ends must be capable of developing the yield stress of the reinforcing bar from bearing of the headed end, and not bond development.
2. Provide ICC-ES report that verifies conformance to ASTM A970-06 and ACI 318-14 or later edition. Provide labeling of headed bars that are factory forged or factory welded in accordance with Section 15 of ASTM A970. Provide manufacturer's identification marks on each component of mechanically attached heads that are field or factory installed.
3. Provide clear cover of 2 bar diameters minimum, and clear spacing between bars of 4 bar diameters minimum.
4. Provide embedment length for HDB's as required by the ENGINEER.

G. Supports for Reinforcement: Bolsters, chairs, spacers, and other devices for spacing, supporting, and fastening reinforcement in place.
   1. Use wire bar type supports complying with CRSI recommendations, except as specified below. Do not use wood, brick, or other unacceptable materials.
   2. For slabs on grade, use supports with sand plates or horizontal runners where base material will not support chair legs.
   3. For all concrete surfaces where legs of supports are in contact with forms, provide supports complying with CRSI "Manual of Standard Practice" as follows:
      a. Either hot-dip galvanized, plastic protected, or stainless steel legs.
   4. Over waterproof membranes, use pre-cast concrete chairs.
   5. For all polyvinyl chloride (PVC) lined concrete surfaces, where legs of supports are in contact with forms, provide supports complying with CRSI "Manual of Standard Practice" as follows:
      a. Either plastic or metal plastic protected legs.

H. Drilled Dowels
   1. Adhesive material for drilled dowels shall be a vinylester resin, epoxy resin, urethane methacrylate, or vinyl urethane resin. Polyester resin shall not be used. The resin shall be a high modulus, moisture insensitive type. The resin shall be packaged in a cartridge type dispensing system with a mixing nozzle. The resin shall be formulated to maintain its bond and integrity under continuous submergence by water. The adhesive anchoring systems shall have an ultimate capacity in excess of 125 percent of the yield strength of the reinforcing steel at an embedment of 12 bar diameters.
   2. Adhesive systems shall be:
      a. HIT HIT-RE 500 V3, manufactured by Hilti Corporation.
      b. SET-3G, manufactured by Simpson Strong-Tie Corporation.
      c. Red Head C6+, manufactured by ITW Ramset/Red Head.
      d. Pure110+ Powerfast, manufactured by DeWalt.
      e. Or equal.

2.2 FABRICATION

A. General: Fabricate reinforcing bars to conform to required shapes and dimensions, with fabrication tolerances complying with CRSI "Manual of Standard Practice". In case of fabricating errors, do not re-bend or straighten reinforcement in a manner that will injure or weaken the materials.

B. Unacceptable Materials: Reinforcement with any of the following defects will not be permitted in the Work:
   1. Bar lengths, bends, and other dimensions exceeding specified fabrication tolerances.
   2. Bends or kinks not shown on approved Shop Drawings.
   3. Bars with reduced cross-section due to excessive rusting or other cause.

PART 3 - EXECUTION

3.1 INSPECTION

A. CONTRACTOR and his installer shall examine the substrate and the conditions under which concrete reinforcement is to be placed and notify ENGINEER, in writing, of unsatisfactory conditions. Do not proceed with the Work until unsatisfactory conditions have been corrected in a manner acceptable to ENGINEER.

3.2 INSTALLATION

A. Comply with the applicable recommendations of specified codes and standards, and CRSI "Manual of Standard Practice", for details and methods of reinforcement placement and supports.

B. Clean reinforcement to remove loose rust and mill scale, earth, ice, and other materials which reduce or destroy bond with concrete.

C. Position, support, and secure reinforcement against displacement during formwork construction or concrete placement operations. Locate and support reinforcing by metal chairs, runners, bolsters, spacers, and hangers, as required.
   1. Place reinforcement to obtain the minimum concrete coverages as shown and as specified in ACI 318. Arrange, space, and securely tie bars and bar supports together with 16 gauge wire to hold reinforcement accurately in position during concrete placement operations. Set wire ties so that twisted ends are directed away from exposed concrete surfaces.
   2. Prior to placement of concrete, demonstrate to ENGINEER that the specified cover of reinforcement has been attained, by using a surveying level or string line.

3. Reinforcing steel shall not be secured to forms with wire, nails, or other ferrous metal. Metal supports subject to corrosion shall not touch formed or exposed concrete surfaces.

D. Install welded wire fabric in as long lengths as practical. Lap adjoining pieces at lease one full mesh and lace splices with 16 gauge wire. Do not make end laps midway between supporting beams or directly over beams of continuous structures. Offset end laps in adjacent widths to prevent continuous laps.

E. Provide sufficient numbers of supports of strength required to carry reinforcement. Do not place reinforcing bars more than 2-inches beyond the last leg of any continuous bar support. Do not use supports as bases for runways for concrete conveying equipment or similar construction loads.

F. Splices:
   1. Provide standard reinforcement splices by lapping ends, placing bars in contact, and tying tightly with wire. Comply with requirements shown on Drawings for minimum lap of sliced bars.

G. Mechanical Couplers in Lieu of Lap Splicing:
   1. Mechanical butt splices shall be in accordance with the recommendation of the manufacturer of the mechanical splicing device. Butt splices shall develop 125% of the specified minimum yield tensile strength of the spliced bars or of the smaller bar in transition splices. Bars shall be flame dried before butt splicing. Adequate jigs and clamps or other devices shall be provided to support, align, and hold the longitudinal centerline of the bars to be butt spliced in a straight line.
   2. Product and Manufacturer: Provide one of the following:
      a. Bar-Lock (MBT) Coupler, as manufactured by BarLock (MBT) Coupler Systems.
      b. Dayton-Superior DBR Coupler, allow for the reduction of bar area at threads.
      c. Or approved equal.

H. Welded Splices
   1. When permitted by the ENGINEER, in writing, all welding of reinforcing bars shall conform to ANSI/AWS D1.4. Preheating and rate of cooling requirements shall be based on bar steel chemistry and ANSI/AWS D1.4 requirements. Welded splices shall be sized and constructed to transfer a minimum of 125 percent of the specified minimum yield tensile strength of the spliced bars or of the smaller bar in transition splices. Unless otherwise permitted by the Engineer, welding of crossing bars (tack welding) for assembly of reinforcement is prohibited.
   2. Welding of wire to wire, and of wire or welded wire fabric to reinforcing bars or structural steels, shall conform to applicable provisions of ANSI/AWS D1.4

and any supplementary requirements by the ENGINEER for the particular application.

3. After completion of welding on coated reinforcing bars, coating damage shall be repaired as specified herein. All welds and all steel splice members when used to splice bars shall be coated with the same material used for repair of coating damage.

I. Drilled Dowels:

1. Drilled dowels shall be reinforcing dowels set in a resin adhesive in a hole drilled into hardened concrete.
2. Holes shall be drilled to the adhesive anchor system manufacturer's recommended diameter and depth to develop the required pullout resistance, but shall not be greater in diameter than 1/4-inch more than the nominal bar diameter nor less than 12 times the nominal bar diameter in depth.
3. The hole shall be drilled by methods which do not interfere with the proper bonding of the resin. Only masonry type drill bits shall be used.
4. Existing reinforcing steel in the vicinity of proposed holes shall be located prior to drilling. The location of holes to be drilled shall be adjusted to avoid drilling through or nicking any existing reinforcing bars only after approval by the ENGINEER.
5. The hole shall be brushed (non-metallic bristle brush only) and blown clean with clean, dry compressed air to remove all dust and loose particles.
6. Resin shall be injected into the hole through the injection system-mixing nozzle (and any necessary extension tubes) placed to the bottom of the hole. The discharge end shall be withdrawn as resin is placed but kept immersed to prevent formation of air pockets. The hole shall be filled to a depth that ensures that excess material is expelled from the hole during dowel placement.
7. Dowels shall be twisted during insertion into the partially filled hole so as to guarantee full wetting of the bar surface with resin. The bar shall be inserted slowly enough to avoid developing air pockets.

3.3 INSPECTION OF REINFORCEMENT

A. Concrete shall not be placed until the reinforcing steel is inspected and permission for placing concrete is granted by ENGINEER. All concrete placed in violation of this Provision will be rejected.

B. Formwork for walls and other vertical members shall not be closed up until the reinforcing steel is inspected and permission for placing concrete is granted ENGINEER. All concrete placed in violation of this will be rejected.

C. Testing of Drilled Dowels: CONTRACTOR shall employ a testing agency to perform field quality control testing of the drilled dowel installation. After completion of the manufacturer's recommended curing period and prior to placement of connecting reinforcing, 10% of drilled dowels installed shall be proof tested for pullout. The drilled dowels shall be tensioned to 60% of the specified

yield strength. Where dowels are located less than six bar diameters from the edge of concrete, the ENGINEER will determine the tensile load required for the test. If any dowels fail, an additional minimum of 10% of installed dowels shall be tested. An additional 10% of installed dowels will be tested if the additional installed dowels fail and repeated until there is no failure. Dowels that fail shall be reinstalled and retested at CONTRACTOR'S expense. Failure due to no fault of contractor's installation, will be reinstalled and retested using an established allowance.

D. Inspection of Welded Splices: Employ a testing agency to perform field quality control testing of the welded splices. All welded splices shall be visually inspected. A minimum of five percent of butt splice welds shall be radiographically tested. Any weld which is deficient in any way shall be repaired to be completely sound at the CONTRACTOR'S expense.

++ END OF SECTION ++

SECTION 03251

CONCRETE JOINTS

PART 1 - GENERAL

1.1 DESCRIPTION

A. Scope:
   1. CONTRACTOR shall provide all labor, materials, equipment, and incidentals as shown, specified, and required to furnish and install concrete joints.
   2. The types of concrete joints required include the following:
      a. Construction joints.
      b. Expansion joints and fillers.
      c. Waterstops.
      d. Control joints.
      e. Isolation joints.

B. General: All joints subject to hydrostatic pressure shall be provided with continuous waterstop.

C. Related Sections:
   1. Section 03100, Concrete Formwork.
   2. Section 03200, Concrete Reinforcement.
   3. Section 03300, Cast-In-Place Concrete.
   4. Section 07900, Joint Sealants.

1.2 QUALITY ASSURANCE

A. Standard Specifications Details:
   1. CONTRACTOR shall conform all applicable requirements of Sections No. 505 and 729 of the Uniform Standard Specifications for Public Works Construction by the Maricopa Association of Governments (MAG) as supplemented by the City of Chandler. Where there is a conflict between MAG Standard Specification as supplemented by the City of Chandler and this Specification, provisions of this Specifications shall govern.

B. Reference Standards: Comply with applicable provisions and recommendations of the following, except as otherwise shown or specified:
   1. ACI 301, Specifications for Structural Concrete for Buildings.
   2. ASTM A36, Standard Specification for Structural Steel.
   3. ASTM D1752, Standard Specification for Preformed Sponge Rubber and Cork Expansion Joint Fillers for Concrete Paving and Structural Construction.
   4. CRD-C572, Corps of Engineers Specifications for Polyvinyl Chloride Waterstop.

C. All manufactured items shall be installed in accordance with manufacturer's instructions.

1.3 SUBMITTALS

A. Shop Drawings: Submit for approval the following:
   1. Manufacturer's specifications and installation instructions for all materials required.
   2. Layout of all construction joint locations prior to the submittal of steel reinforcing drawings. Comply with the requirements of Section 01332, Shop Drawing Procedures.
   3. Detail for joining polyvinyl chloride to steel waterstops.
   4. Refer to and comply with the requirements of Section 01332, Shop Drawing Procedures.
   5. CONTRACTOR shall submit an electronic copy per Specification Section 01332, Shop Drawing Procedures. Text shall be in electronic ASCII format. Drawings and figures shall be in Version 2012 or newer AutoCAD ".dwg," or pdf ".pdf" format.
   6. A copy of this specification section, with addendum updates included, and all referenced and applicable sections, with addendum updates included, with each paragraph check-marked to indicate specification compliance or marked to indicate requested deviations from specification requirements. Check marks (□) shall denote full compliance with a paragraph as a whole. If deviations from the specifications are indicated, and therefore requested by the CONTRACTOR, each deviation shall be underlined and denoted by a number in the margin to the right of the identified paragraph, referenced to a detailed written explanation of the reasons for requesting the deviation. The ENGINEER shall be the final authority for determining acceptability of requested deviations. The CONTRACTOR shall furnish equipment and/or services as specified if an exception and/or deviation is rejected. The remaining portions of the paragraph not underlined will signify compliance on the part of the CONTRACTOR with the specifications. Failure to include a copy of the marked-up specification sections, along with justification(s) for any requested deviations to the specification requirements, with the submittal shall be sufficient cause for rejection of the entire submittal with no further consideration.

B. Samples: Submit for approval the following:
   1. Polyvinyl chloride for joints.
   2. Cork expansion joint fillers.

PART 2 - PRODUCTS

2.1 WATERSTOPS

A. Polyvinyl Chloride:
   1. Reference Standard: CRD-C572.
   2. Construction Joints: Minimum of 3/8-inch thick.
      a. Minimum Width: 6” flatstrip ribbed type.
   3. Expansion Joints: Uniform minimum thickness of 1/4-inch by 9-inch minimum width. Center bulb shall be "O" or "U" shaped. The "O" shall have an outside diameter of 3/4-inch minimum. The top of the "U" shall be jointed by a membrane which will tear when the expansion occurs.
   4. Manufacturer: Provide polyvinyl chloride waterstops of one of the following:
      a. W. R. Meadows, Incorporated.
      b. Greenstreak waterstops by Sika Corporation.
      c. Or approved equal.

B. Hypalon:
   1. Provide hypalon waterstops as shown, 40 mils thick.
   2. Waterstop shall be an integral part of a manufacturer's joint sealing system and shall be in accordance with the manufacturer's published recommendations.
   3. Product and Manufacturer: Provide one of the following:
      a. Sikadur Combiflex, as manufactured by Sika Corporation.
      b. Or approved equal.

2.2 HYDROPHILIC WATERSTOP MATERIALS

A. General Material Properties
   1. Hydrophilic waterstop materials shall be bentonite-free and shall expand by a minimum of 80 percent of dry volume in the presence of water to form a watertight joint seal without damaging the concrete in which it is cast. Provide only where indicated in the Contract Documents.
   2. The material shall be composed of resins and polymers which absorb water and cause an increase in volume in a completely reversible and repeatable process. The waterstop material shall be dimensionally stable after repeated wet-dry cycles with no deterioration of swelling potential.
   3. Select materials which are recommended by the manufacturer for the type of liquid to be contained.

B. Hydrophilic Rubber Waterstop
   1. 1. The minimum cross sectional dimensions shall be 3/16-inch by 3/4-inch.
   2. Product and Manufacturer: Provide one of the following:
      a. Hydrotite, by Sika Corporation.
      b. Adeka Ultraseal MC-2010M, by OCM Inc.
      c. Or equal.

C. Hydrophilic Sealant:
   1. The hydrophilic sealant shall adhere firmly to concrete, metal, and PVC in dry or damp condition. When cured it shall be elastic indefinitely.
   2. Product and Manufacturer: Provide one of the following:
      a. Leakmaster, by Sika Corporation.
      b. Adeka Ultraseal P-201, OCM Inc.
      c. SikaSwell S, by Sika Corporation.
      d. Or equal.

D. Hydrophilic Injection Resin
   1. Hydrophilic injection resin shall be acrylate-ester based. The viscosity shall be less than 50 cps. The resin shall be water soluble in its uncured state, solvent free, and non-water reactive. In the cured state it shall form a solid hydrophilic flexible material which is resistant to permanent water pressure and shall not attack bitumen, joint sealants, or concrete.
   2. Product and Manufacturer: Provide one of the following:
      a. SikaFix HH+, by Sika Corporation.
      b. Or equal.

2.3 PREFORMED EXPANSION JOINT FILLER

A. Provide preformed expansion joint filler complying with ASTM D1752, Type I (sponge rubber) or Type II (cork).

2.4 CONCRETE CONSTRUCTION JOINT ROUGHENER

A. Provide a water-soluble non-flammable, surface-retardant roughener.

B. Product and Manufacturer: Provide one of the following:
   1. Rugasol-S, as manufactured by Sika Corporation, for horizontal joints only.
   2. Concrete Surface Retarder-Formula S, as manufactured by Euclid Chemical Company, for horizontal joints only.
   3. Concrete Surface Retarder-formula F, as manufactured by Euclid Chemical Company, for vertical joints only.
   4. Or approved equal.

2.5 EPOXY BONDING AGENT

A. Provide an epoxy-resin bonding agent, two-component type.

B. Product and Manufacturer: Provide one of the following:
   1. Sikadur 32 Hi-Mod LPL, as manufactured by Sika Corporation.
   2. Eucopoxy LPL, as manufactured by the Euclid Chemical Company.
   3. Or approved equal.

2.6 RUBBER BONDING AGENT

A. Product and Manufacturer: Provide one of the following:
   1. Scotch-Grip 1300 Rubber Adhesive, as manufactured by 3M Company.
   2. Or approved equal.

2.7 JOINT SEALANT

Sealant used in expansion joints and other locations where it is shown and which will be subject to being submerged by water for any period of time shall be a two part polyurethane type sealant meeting the requirements of ASTM C 920, Type M, Class 25. The sealant shall be specially formulated for continuous submerged conditions. The manufacturer's recommended primer must be used with the sealant.

A. The sealant shall meet the following requirements (measured at 73° F and 50% RH):
   1. Ultimate hardness (ASTM D 2240, Type A, Shore): 20 to 45.
   2. Tensile strength (ASTM D 412): 200 psi, minimum.
   3. Ultimate elongation (ASTM D 412): 400 percent, minimum.
   4. Tear strength (ASTM D 624, die C): 75 pounds per inch of thickness, minimum.
   5. Color: light gray.

B. Product and Manufacturer: Provide one of the following:
   1. Permapol RC-270 Reservoir Sealant, as manufactured by Products Research and Chemical Corporation.
   2. Sikaflex-2c, as manufactured by Sika Corporation.
   3. Or approved equal.

2.8 JOINT SEALANT ACCESSORIES

A. Backer Rod: Backer rod shall be an extruded closed-cell polyethylene foam rod. The material shall be compatible with the sealant material used and shall have a tensile strength of not less than 40 psi and a compression deflection of approximately 25 percent at 8 psi. The rod shall be 1/8-inch larger in diameter than the joint width at joints less than 3/4-inch wide and 1/4-inch larger in diameter at joints 3/4-inch and wider.

B. Bond Breaker Tape: Bond breaker shall be polyethylene or TFE-fluorocarbon self-adhesive tape, as recommended by the manufacturer.

C. Primer: Non-staining type, recommended by sealant manufacturer to suit application.

D. Joint cleaner: Noncorrosive, non-staining, compatible with joint forming materials and as recommended by sealant manufacturer.

PART 3 - EXECUTION

3.1 INSPECTION

A. CONTRACTOR and his installer shall examine the substrate and the conditions under which Work is to be performed and notify ENGINEER in writing of unsatisfactory conditions. Do not proceed with the Work until unsatisfactory conditions have been corrected in a manner acceptable to ENGINEER.

3.2 CONSTRUCTION JOINTS

A. Comply with ACI 301 and as specified below.

B. Locate and install construction joints as shown. Additional construction joints shall be located as follows:
   1. In walls locate joints at a spacing of 40 feet maximum and approximately 12 feet from corners.
   2. In foundation slabs and slabs on grade locate joints at a spacing of approximately 40 feet. Place concrete in a strip pattern.
   3. In mats and structural slabs and beams, at a spacing of approximately 40 feet. Locate joints in compliance with ACI 301.
   4. Provide other additional construction joints as required to satisfactorily complete all Work.

C. Horizontal Joints:
   1. Roughen concrete at the interface of construction joints by abrasive blasting, hydroblasting, or the use of surface retardants and water jets to expose the aggregate and remove accumulated concrete on rebar immediately subsequent to form stripping, unless otherwise approved by ENGINEER. Immediately before placing fresh concrete, thoroughly clean the existing contact surface using a stiff brush or other tools and a stream of water under pressure. The surface shall be clean and wet, but free from pools of water at the moment the fresh concrete is placed.
   2. Remove laitance, waste mortar, or other substance which may prevent complete adhesion. Where joint roughening was performed more than seven days prior to concrete placement or where dirt or other bond reducing contaminants are on the surface, additional light abrasive blasting or hydroblasting shall be done to remove laitance and all bond reducing materials just prior to concrete placement.
   3. Place a 2-inch thick coat of mortar, one part sand and one part cement with water added to a flowable consistency or a 6-inch layer of Construction Joint Grout, as specified in Section 03600, Grout, over the contact surface of the old concrete. Place fresh concrete before the mortar or grout has attained its initial set. If the concrete mix has the slump increased to at least 6-inches by addition of a high range water reducer, the placement of mortar or grout may be omitted

D. Vertical Joints:
   1. Apply roughener to the form in a thin, even film by brush, spray, or roller in accordance with the manufacturer's instructions. After roughener is dry, concrete may be placed.
   2. When concrete has been placed, remove joint surface forms as early as is necessary to allow for removal of the surface retarded concrete. Forms covering member surfaces shall remain in place as required by Section 03100, Concrete Formwork. Wash loosened material off with high-pressure water spray to obtain roughened surface subject to approval by ENGINEER. Alternately, the surface shall be roughened by abrasive blasting or hydroblasting to expose aggregate. The outer 1-inch of each side of the joint face shall be masked and protected from the blasting to avoid damage to the member surface.

3.3 EXPANSION JOINTS

A. Comply with ACI 301 and as specified below.

B. Locate and install expansion joints as shown. Install cork filler in accordance with manufacturer's instructions. Caulking and sealants shall be installed as specified in Section 07900, Joint Sealants.

3.4 CONTROL JOINTS

A. Control joints shall be provided in non-water bearing slabs on grade only where specifically noted. A groove, with a depth of at least 25% of the member thickness, shall be formed or saw-cut in the concrete. This groove shall be filled with joint sealant material as specified in Section 07900, Joint Sealants.

B. Where the control joint is formed by saw cutting, the cut shall be made immediately after the concrete has set enough to support the saw and be cut without being damaged. The concrete shall be kept continually moist during the cutting operation.

C. Control joints may be formed with a tool or by insertion of a joint forming strip. After the concrete has gained its design strength, the upper portion of the joint forming strip shall be removed and the void filled with sealant.

D. Provide control joints at all re-entrant corners.

E. Where not shown on plans, provide control joints in slabs, with a minimum panel length to width ratio of 2:1, with a maximum length of 20 feet.

3.5 ISOLATION JOINTS

A. Wherever a sidewalk or other slab on grade abuts a concrete structure and is not shown doweled into that structure, an isolation joint shall be provided. Such joint

shall be formed by a 1/2-inch joint filler with the upper 1/2-inch of the joint filled with sealant.

3.6 WATERSTOPS

A. General:
   1. Comply with ACI 301 and as specified below. All joints shall be made in accordance with manufacturer's instructions.
   2. Obtain ENGINEER'S approval for waterstop locations not shown.
   3. Provide waterstops in all foundations, tanks, and other substructures up to an elevation at least 12-inches above grade or to an elevation at least 12-inches above highest liquid level in tanks, whichever is higher, except where otherwise shown or noted.

B. Polyvinyl Chloride Waterstop:
   1. Tie waterstop to reinforcement so that it is securely and rigidly supported in the proper position during concrete placement. Continuously inspect waterstops during concrete placement to ensure their proper positioning.
   2. Splices in waterstops shall be performed by heat sealing the adjacent waterstop sections in accordance with the manufacturer's printed recommendations. It is required that:
      a. The material shall not be damaged by heat sealing.
      b. The splices shall have a tensile strength of not less than 60 percent of the unspliced materials tensile strength.
      c. The continuity of the waterstop ribs and of its tubular center axis shall be maintained.
   3. Only butt type joints of the ends of two identical waterstop sections shall be allowed to be made while the material is in the forms.
   4. All joints with waterstops involving more than two ends to be jointed together, and all joints which involve an angle cut, alignment change, or the joining of two dissimilar waterstop sections shall be prefabricated by CONTRACTOR or manufacturer prior to placement in the forms, allowing not less than 24-inch long strips of waterstop material beyond the joint. Upon being inspected and approved, such prefabricated waterstop joint assemblies shall be installed in the forms and the ends of the 24-inch strips shall be butt welded to the straight run portions of waterstop in place in the forms.
   5. Where a centerbulb waterstop intersects and is jointed with a non-centerbulb waterstop, care shall be taken to seal the end of the centerbulb, using additional PVC material, if required.
   6. The symmetrical halves of the waterstops shall be equally divided between the concrete placements at the joints and centered within the joint width, unless shown otherwise. Centerbulb waterstops shall be placed in expansion joints so that the centerbulb is centered on the joint filler material.
   7. When any waterstop is installed in the forms or is embedded in the first concrete placement and the waterstop remains exposed to the atmosphere for more than four days, suitable precautions shall be taken to shade and protect

the exposed waterstop from direct rays of the sun during the entire exposure and until the exposed portion of the waterstop is embedded in concrete.

8. Waterstop placed in joints intended for future concrete placement shall be protected from direct rays of the sun by temporary means until a permanent cover is installed so that the waterstop is not exposed to the direct rays of the sun for more than a total of four days.

C. Hypalon Waterstop: Install in accordance with joint sealing system manufacturer's recommendations.

D. Hydrophilic Rubber Waterstop and Sealant

1. Where a hydrophilic rubber waterstop or sealant is called for in the Contract Documents, or where approved by the ENGINEER, it shall be installed with the manufacturer's instructions and recommendations; except, as modified herein.
2. When requested by the ENGINEER, the manufacturer shall provide technical assistance in the field.
3. The waterstop or sealant shall be located as near as possible to the center of the joint and it shall be continuous around the entire joint. The minimum distance from the edge of the waterstop to the face of the member shall be 3-inches.
4. Where a hydrophilic rubber waterstop is used in combination with PVC waterstop, the hydrophilic rubber waterstop shall overlap the PVC waterstop for a minimum of 6-inches. The contact surface between the hydrophilic rubber waterstop the PVC waterstop shall be filled with hydrophilic sealant.
5. Where wet curing methods are used, hydrophilic rubber waterstop and sealant shall be applied after curing water is removed and just prior to the closing up of the forms for the concrete placement. Hydrophilic rubber waterstop and sealant shall be protected from the direct rays of the sun and from becoming wet prior to concrete placement. If the material does become wet and expands, it shall be allowed to dry until it has returned to its original cross sectional dimensions before concrete is placed.
6. The hydrophilic rubber waterstop shall be installed in a bed of hydrophilic sealant, before skinning and curing begins, so that any irregularities in the concrete surface are completely filled and the waterstop is bonded to the sealant. After the sealant has cured, concrete nails, with washers of a diameter equal to the waterstop width, shall be placed to secure the waterstop to the concrete at a maximum spacing of 18-inches.
7. Prior to installation of hydrophilic sealant, the concrete surface shall be wire brushed or sand blasted to remove any laitance or other materials that may interfere with the bonding. Surfaces of metal or PVC to receive sealant shall be cleaned of paint and any material that may interfere with bond. When sealant alone is shown on the Contract Documents, it shall be placed in a built up bead which has a triangular cross section with each side of the triangle at least 3/4- inch in length, unless indicated otherwise. Concrete shall not be placed until the sealant has cured as recommended by the manufacturer.

Hydrophilic Waterstop: Install in accordance with joint sealing system manufacturer's recommendations.

3.7 BONDING WITH EPOXY ADHESIVE

A. Use adhesive for the following:
   1. Bonding of fresh concrete to concrete cured at least 45 days or to existing concrete.
   2. Bonding of horizontal surfaces which will receive a topping.

B. Handle and store epoxy adhesive in compliance with the manufacturer's printed instructions, including safety precautions.

C. Mix the epoxy adhesive in complete accordance with the instructions of the manufacturer.

D. Before placing fresh concrete, thoroughly roughen and clean hardened concrete surfaces and coat with epoxy grout not less than 1/16-inch thick. Place fresh concrete while the epoxy material is still tacky, without removing the in-place grout coat, and as directed by the epoxy manufacturer.

3.8 SEALANT INSTALLATION

A. Sealants shall be installed according to the manufacturer’s recommendations for sealant which is to be subjected to continuous submerged conditions and the following requirements. Prior to sealant installation, arrange to have a representative of the sealant manufacturer instruct the crew doing the Work as to the proper methods of surface preparation, mixing, and application of the sealant.

B. Surfaces to receive sealant shall be cleaned of all materials which could interfere with proper bonding. Concrete surfaces shall have all fins or other defects removed or repaired and shall receive a light abrasive blasting prior to priming and sealant application. All surfaces to receive sealant shall be completely dry.

C. Spaces to receive sealant shall be filled with joint filler as shown. Where not shown, the space shall be filled with joint filler or a backer rod so that the depth of sealant does not exceed the width of the space. Where the bottom of the space to receive sealant is formed by a material other than backer rod, a bond breaker tape shall be placed. The maximum sealant depth, at middle of the joint width, shall be 1/2-inch.

D. The primer and sealant used shall be supplied by the same manufacturer. No sealant shall be placed without the use of a primer.

E. Self-leveling sealants shall only be used in joints with a slope less than 0.5 percent and where maximum and minimum sealant depths can be maintained. Non-sag sealant shall be used at all other locations and may be used instead of self-leveling

sealant. All non-sag sealant shall be tooled to a uniform concave surface before skinning and curing begins.

F. Sealant material shall be conditioned to be within the optimum temperature range recommended by the manufacturer for installation for a minimum of 16 hours prior to installation. Installation shall proceed only when the substrate is at a temperature recommended by the manufacturer. Sealant shall not be placed if there is a threat of imminent rainfall. Submit a letter certifying that the applied sealants were installed in accordance with the manufacturer's recommendations, including temperature, relative humidity, etc.

G. All joints to receive sealant shall be inspected by the ENGINEER prior to sealant placement.

H. All sealant shall achieve final cure at least seven days before the structure is filled with water.

I. Any sealant which, after the manufacturer's recommended curing time for the job conditions, fails to fully and properly cure shall be completely removed. The surfaces to receive sealant shall be completely cleaned of all traces of the improperly cured sealant and primer. The specified sealant shall then be reinstalled. All costs of such removal, surface treatment, and reinstallation shall be at the expense of CONTRACTOR.

++ END OF SECTION ++

SECTION 03300

CAST-IN-PLACE CONCRETE

PART 1 - GENERAL

1.1 DESCRIPTION

A. Scope:
   1. CONTRACTOR shall provide all labor, materials, equipment, and incidentals as shown, specified, and required to furnish and install cast-in-place concrete.
   2. The Work includes providing concrete consisting of Portland cement, fine and coarse aggregate, water, and approved admixtures; combined, mixed, transported, placed, finished, and cured. The Work also includes:
      a. Providing openings in concrete to accommodate the Work under this and other Sections and building into the concrete all items such as sleeves, frames, anchor bolts, inserts, and all other items to be embedded.

B. Coordination:
   1. Review installation procedures under other Sections and coordinate the installation of items that must be installed in the concrete.

C. Classes of Concrete:
   1. 5,000 psi (at 28 days) concrete shall be steel reinforced and shall be used for the following pre-cast applications:
      a. Manholes and vaults.
   2. Class "A" (4,000 psi at 28 days) concrete shall be steel reinforced and shall be used for the following applications:
      a. All concrete, unless indicated otherwise.
   3. Class "B" concrete (3,000 psi at 28 days) shall be placed without forms or with simple forms, with little or no reinforcing, and includes the following:
      a. Duct banks.
      b. Unreinforced encasements.
      c. Curbs and gutters.
      d. Sidewalks.
      e. Thrust blocks.
   4. Class "C" (2,000 psi at 28 days) concrete shall be placed without forms or with simple forms, with little or no reinforcing.

D. Related Sections:
   1. Section 02315, Earthwork, Excavation, and Backfill.
   2. Section 03100, Concrete Formwork.
   3. Section 03200, Concrete Reinforcement.
   4. Section 03251, Concrete Joints.

1.2 QUALITY ASSURANCE

A. Reference Standards: Comply with the applicable provisions and recommendations of the following, except as otherwise shown or specified.
   1. ACI 211.1, Standard Practice for Selecting Proportions for Normal, Heavyweight and Mass Concrete.
   2. ACI 214, Recommended Practice for Evaluation of Strength Test Results of Concrete.
   3. ACI 301, Specifications for Structural Concrete for Buildings, (includes ASTM Standards referred to herein).
   4. ACI 304, Guide for Measuring, Mixing, Transporting, and Placing Concrete.
   5. ACI 305, Hot Weather Concreting.
   6. ACI 309, Guide for Consolidation of Concrete.
   7. ACI 311, Guide for Concrete Inspection.
   8. ACI 318, Building Code Requirements for Reinforced Concrete.
   9. ACI 350R, Environmental Engineering Concrete Structures.
   10. AASHTO M182, Burlap Cloth Made From Jute or Kenaf.

B. Concrete Testing Service:
   1. CONTRACTOR shall employ, at his own expense, a testing laboratory experienced in design and testing of concrete materials and mixes to perform material evaluation tests and to design concrete mixes.
      a. Testing agency shall meet the requirements of ASTM E329.
      b. Selection of a testing laboratory is subject to ENGINEER'S approval.
      c. Submit a written description of the proposed concrete testing laboratory giving qualifications of personnel, laboratory facilities and equipment, and other information which may be requested by ENGINEER.
   2. Materials and installed Work may require testing and retesting, as directed by ENGINEER, at any time during the progress of the Work. Allow free access to material stockpiles and facilities at all times. Tests not specifically indicated to be done at OWNER'S expense, including the retesting of rejected materials and installed Work, shall be done at CONTRACTOR'S expense.

C. Qualifications of Water-Reducing Admixture Manufacturer:
   1. Water-reducing admixtures shall be manufactured under strict quality control in facilities operated under a quality assurance program. CONTRACTOR shall furnish copy of manufacturer's quality assurance handbook to document the existence of the program. Manufacturer shall maintain a concrete testing laboratory which has been approved by the Cement and Concrete Reference Laboratory at the Bureau of Standards, Washington, D.C.
   2. Provide a qualified concrete technician employed by the admixture manufacturer to assist in proportioning the concrete for optimum use of the admixture. The concrete technician shall advise on proper addition of the admixture to the concrete and on adjustment of the concrete mix proportions to meet changing job site conditions.

D. Tests for Concrete Materials:
   1. Submit written reports to ENGINEER, for each material sampled and tested, prior to the start of Work.
   2. Provide the Project identification name and number, date of report, name of CONTRACTOR, name of concrete testing service, source of concrete aggregates, material manufacturer and brand name for manufactured materials, values specified in the referenced specification for each material, and test results. Indicate whether or not material is acceptable for intended use.

1.3 SUBMITTALS

A. Samples: Submit samples of materials as specified and as otherwise may be requested by ENGINEER, including names, sources, and descriptions.

B. Shop Drawings: Submit for approval the following:
   1. Manufacturer's specifications with application and installation instructions for proprietary materials and items, including admixtures and bonding agents.
   2. List of concrete materials and concrete mix designs proposed for use. Include the results of all tests performed to qualify the materials and to establish the mix designs.
   3. The following information, if ready-mixed concrete is used.
      a. Physical capacity of mixing plant.
      b. Trucking facilities available.
      c. Estimated average amount which can be produced and delivered to the site during a normal eight hour day, excluding the output to other customers.

C. Laboratory Test Reports: Submit copies of laboratory test reports for concrete cylinders, materials and mix design tests. ENGINEER'S review will be for general information only. Production of concrete to comply with specified requirements is the responsibility of CONTRACTOR.

D. Submit notarized certification of conformance to referenced standards when requested by ENGINEER.

E. Delivery Tickets: Furnish to ENGINEER copies of all delivery tickets for each load of concrete delivered to the site. Provide items of information as specified in ASTM C94, Section 16.
   1. Provide batch tickets for each batch of job site mixed concrete, as specified.

F. The CONTRACTOR shall submit Portland cement submittals to the ENGINEER by a well known manufacturer and supplied by one plant.

G. CONTRACTOR may provide Portland cement from a second plant to be used in emergency situations only. CONTRACTOR must provide second submittal within 30 days of receipt of first submittal.

H. Each Shop Drawing Submittal shall include a hard copy of the relevant Specification Section and shall be clearly marked to indicate whether the requirements for equipment and/or services in the Specification Section are met by writing "accept" or "deviate" next to each Paragraph. If clarifications are needed to any of the Paragraphs in the Specification Sections due to deviations, they shall be addressed next to the Paragraph as such and explained further with any additional information necessary. If any exceptions and/or deviations are proposed to any of the Specifications, they shall be clearly noted as such in the Submittal, and an explanation of any deviation and/or exception shall be provided. The CONTRACTOR shall furnish equipment and/or services as specified if an exception and/or deviation is rejected. Failure to include a copy of the marked-up specification sections, along with justification(s) for any requested deviations to the specification requirements, with the submittal shall be sufficient cause for rejection of the entire submittal with no further consideration.

1.4 PRODUCT DELIVERY, STORAGE, AND HANDLING

A. All materials used for concrete must be kept clean and free from all foreign matter during transportation and handling and kept separate until measured and placed in the mixer. Bins or platforms having hard clean surfaces shall be provided for storage. Suitable means shall be taken during hauling, piling, and handling to insure that segregation of the coarse and fine aggregate particles does not occur and the grading is not affected.

1.5 CONCRETE COORDINATION MEETING

A. Concrete Coordination Meeting shall be held to review the detailed requirements of CONTRACTOR'S proposed concrete design mixes, to determine the procedures for producing proper concrete construction, and to clarify the roles of the parties involved shall be held no later than 14 days after the Notice to Proceed.

B. All parties involved in the concrete Work shall attend the conference, including but not limited to the following:
   1. CONTRACTOR'S representative.
   2. Testing laboratory representative.
   3. Concrete subcontractor.
   4. Reinforcing steel subcontractor and detailer.
   5. Concrete supplier.
   6. Admixture manufacturer's representative.
   7. ENGINEER.

C. The Concrete Coordination Meeting shall be held at a mutually agreed upon time and place. The ENGINEER shall be notified no less than five days prior to the date of the Concrete Coordination Meeting.

PART 2 - PRODUCTS

2.1 CONCRETE MATERIALS

A. Cement:
   1. Portland cement, ASTM C150, Type II.
   2. Use Portland cement made by a well-known acceptable manufacturer and produced by not more than one plant.
   3. Do not use cement which has deteriorated because of improper storage or handling.

B. Aggregates: ASTM C33 and as herein specified.
   1. Do not use aggregates containing soluble salts or other substances such as iron sulfides, pyrite, marcasite, ochre, or other materials that can cause stains on exposed concrete surfaces.
   2. Fine Aggregate: Clean, sharp, natural sand free from loam, clay, lumps, or other deleterious substances.
      a. Dune sand, bank run sand, and manufactured sand are not acceptable.
   3. Coarse Aggregate: Clean, uncoated, processed aggregate containing no clay, mud, loam, or foreign matter as follows:
      a. Crushed stone, processed from natural rock or stone.
      b. Washed gravel, either natural or crushed. Use of slag and pit or bank run gravel is not permitted.
      c. Coarse Aggregate Size: Size to be ASTM C33, Nos. 57 or 67, except that No. 467 may be used for footings, foundation mats, and walls 16-inches or greater in thickness.

C. Water: Clean, free from injurious amounts of oils, acids, alkalis, organic materials, or other substances that may be deleterious to concrete or steel.

2.2 CONCRETE ADMIXTURES

A. Provide admixtures produced by established reputable manufacturers and use in compliance with the manufacturer's printed instruction. Do not use admixtures which have not been incorporated and tested in the accepted mixes, unless otherwise authorized in writing by ENGINEER.

B. Air-Entraining Admixtures: ASTM C 260.
   1. Product and Manufacturer: Provide one of the following:
      a. SIKA AER or SIKA AEA-15, as manufactured by Sika Corporation.
      b. MB-VR, as manufactured by Master Builders, Inc.
      c. Daravair, as manufactured by W.R. Grace & Company.
      d. Or approved equal.

C. Water-Reducing Admixture: ASTM C494, Type A.

1. Proportion all Class "A" and Class "B" concrete with non-air entraining, normal setting, water-reducing, aqueous solution of a modification of the salt of polyhydroxylated organic acids. The admixture shall not contain any lignin, nitrates, or chlorides added during manufacture.
2. Product and Manufacturer: Provide one of the following:
    a. Eucon WR-75, as manufactured by The Euclid Chemical Company.
    b. Pozzolith, as manufactured by Master Builders, Inc.
    c. WRDA-64, as manufactured by W.R. Grace & Conn.
    d. Or approved equal.

D. Pozzolanic Admixtures:
1. Mineral admixtures, when used, shall meet the requirements of ASTM C618, Class F, except as follows:
    a. The loss on ignition shall be a maximum of 4%.
    b. The maximum percent of sulfur trioxide (SO3) shall be 4.0.
2. A substitution by weight, of the Portland cement, by pozzolan, so that the total tricalcium aluminate content of the resulting cement plus pozzolan is not greater than 8%, will be considered. However, the pozzolan shall not exceed 20% by weight of the cement, plus pozzolan.

E. Set-Control Admixtures: ASTM C494, as follows:
1. Type B, Retarding.
2. Type C, Accelerating.
3. Type D, Water-reducing and Retarding.
4. Type E, Water-reducing and Accelerating.

F. Calcium Chloride: Do not use calcium chloride in concrete, unless otherwise authorized in writing by ENGINEER. Do not use admixtures containing calcium chloride where concrete is placed against galvanized steel.

2.3 PROPORTIONING AND DESIGN OF MIXES

A. Prepare concrete design mixes subject to the following limitations:

Class	Coarse Aggregate[1]		Minimum	Maximum	Slump[2]	Air	Min. Comp
	Size A	Size B	Cementitious	W/C		%	Strength[3]
			(lbs/cu yd)				(psi)
5000 psi	#57 or #67		705	0.40	4" Max.	3 max	5000
Class "A"	#57 or #67		564	0.45	4" Max.	4+/-1	4000
Class "B"	#57 or #67		517	0.50	4" Max.	4+/-1	3000
Class "C"	Any ASTM C33		← No requirements →				2000

1. Coarse aggregate size numbers refer to ASTM C33. Where a size A and B are listed, it is intended that the smaller size B aggregate is to be added, replacing a portion of the coarse and /or fine aggregate, in the minimum amount necessary to make a workable and pumpable mix with a sand content not exceeding 41% of total aggregate.
2. The slumps listed are prior to the addition of high range water reducer (super plasticizer).
3. Mix designs shall be made for all but Class "C", which does not require a trial batch, so that the compressive strength achieved for the laboratory trial batches will be no less than 125% of the specified design strength. This is to assure meeting the design strength for all concrete batched during the Project.
4. The quantity of water to be used in the determination of the water-cementitious materials ratio shall include free water on aggregates in excess of SSD and the water portion of admixtures.

B. Use an independent testing facility acceptable to ENGINEER for preparing and reporting proposed mix designs.
   1. The testing facility shall not be the same as used for field quality control testing.

C. Proportion mixes by either laboratory trial batch or field experience methods, using materials to be employed on the Project for concrete required. Comply with ACI 211.1 and report to ENGINEER the following data:
   1. Complete identification of aggregate source of supply.
   2. Tests of aggregates for compliance with specified requirements.
   3. Scale weight of each aggregate.
   4. Absorbed water in each aggregate.
   5. Brand, type, and composition of cement.
   6. Brand, type, and amount of each admixture.
   7. Amounts of water used in trial mixes.
   8. Proportions of each material per cubic yard.
   9. Gross weight and yield per cubic yard of trial mixtures.
   10. Measured slump.
   11. Compressive strength developed at 7 days and 28 days, from not less than three test cylinders cast for each 7 day and 28 day test, and for each design mix.

D. Submit written reports to ENGINEER of proposed mix of concrete at least 15 days prior to start of Work.

E. Laboratory Trial Batches: When laboratory trial batches are used to select concrete proportions, prepare test specimens and conduct strength tests as specified in ACI 301, Section 4 - Proportioning.

F. Field Experience Method: When field experience methods are used to select concrete proportions, establish proportions as specified in ACI 301, Section 4.

G. Adjustment to Concrete Mixes: Mix design adjustments may be requested by CONTRACTOR when characteristics of materials, job conditions, weather, test results, or other circumstances warrant; at no additional cost to the OWNER and as accepted by ENGINEER. Laboratory test data for revised mix designs and strength results must be submitted to and accepted by ENGINEER before using the revised mixes.

H. Admixtures:
   1. Use amounts of admixtures as recommended by the manufacturer for climatic conditions prevailing at the time of placing. Adjust quantities and types of admixtures as required to maintain quality control.

I. Slump Limits:
   1. A slump of up to 5-inches will be allowed for Class "C" concrete. See the General Structural Notes in the Drawings for allowable slumps for other mixes.
   2. Slump tolerances for all concrete shall meet the requirements of ACI 301 and ACI 117.

J. Red Dye:
   1. Add red dye to all concrete used for electrical duct bank encasement.

2.4 EPOXY BONDING AGENT

A. Provide an epoxy-resin bonding agent, two-component type.

B. Product and Manufacturer: Provide one of the following:
   1. Sikadur 32 Hi-Mod LPL, as manufactured by Sika Corporation.
   2. Eucopoxy LPL, as manufactured by the Euclid Chemical Company.
   3. Or approved equal.

2.5 CONCRETE CURING MATERIALS

A. Absorptive Cover: Burlap cloth made from jute or kenaf, weighing approximately 10 ounces per square yard and complying with AASHTO M182, Class 3.

B. Moisture-Retaining Cover: Comply with ASTM C171.
   1. Transguard 4000 or approved equal.

C. Curing Compound: ASTM C309 Type 1-D (water retention requirements):
   1. Product and Manufacturer: Provide one of the following:
   2. Super Aqua Cure VOX, as manufactured by The Euclid Chemical Company.
   3. Sealtight 1100, as manufactured by W.R. Meadows, Incorporated.
   4. MasterKure, as manufactured by Master Builders, Inc.
   5. Or approved equal.
   6. Provide fugitive dye when requested by ENGINEER.

2.6 EMBEDDED ITEMS

A. Items such as plates, angles, inserts, bolts, and similar items not specified elsewhere shall be provided and installed under this Section. All embedded items shall be hot-dip galvanized after fabrication. After galvanizing, coat with zinc chromate paint. Stainless steel items shall not be galvanized.

2.7 CRACK INJECTION MATERIALS

A. Epoxy:
   1. Epoxy for injection shall be a low viscosity, high modulus moisture insensitive type.
   2. Products and Manufacturers: Provide one of the following:
      a. Sikadur 35, Hi-Mod L.V. and Sikadur 31, Hi-Mod Gel, as manufactured by Sika Corporation.
      b. Eucopoxy Injection Resin, as manufactured by The Euclid Chemical Company.
      c. Or approved equal.

PART 3 - EXECUTION

3.1 INSPECTION

A. CONTRACTOR and his installer shall examine the substrate and the conditions under which Work is to be performed and notify ENGINEER in writing of unsatisfactory conditions. Do not proceed with the Work until unsatisfactory conditions have been corrected in a manner acceptable to ENGINEER.

3.2 CONCRETE MIXING

A. General:
   1. Concrete may be produced at batch plants or it may be produced by the ready-mixed process. Batch plants shall comply with the recommendations of ACI 304 and shall have sufficient capacity to produce concrete of the qualities specified, in quantities required to meet the construction schedule. All plant facilities are subject to testing laboratory inspection and acceptance of ENGINEER.
   2. Mixing:
      a. Mix concrete with an approved rotating type batch machine, except where hand mixing of very small quantities may be permitted.
      b. Remove hardened accumulations of cement and concrete frequently from drum and blades to assure acceptable mixing action.
      c. Replace mixer blades when they have lost 10% of their original height.
      d. Use quantities such that a whole number of bags of cement is required, unless otherwise permitted.
   3. Job Site Mixing: Is not permitted.

B. Ready-Mix Concrete:
   1. Comply with the requirements of ASTM C94 and as herein specified. Proposed changes in mixing procedures, other than herein specified, must be accepted by ENGINEER before implementation.
      a. Plant Equipment and Facilities: Conform to National Ready-Mix Concrete Association "Plant and Delivery Equipment Specification".
      b. Mix concrete in revolving type truck mixers which are in good condition and which produce thoroughly mixed concrete of the specified consistency and strength.
      c. Do not exceed the proper capacity of the mixer.
      d. Mix concrete for a minimum of two minutes after arrival at the job site or as recommended by the mixer manufacturer.
      e. Mix at proper speed until concrete is discharged.
      f. Maintain adequate facilities at the job site for continuous delivery of concrete at the required rates.
      g. Provide access to the mixing plant for ENGINEER at all times.

2. Provide a batch ticket for each batch discharged and used in the Work, indicating the Project identification name and number, date, mix type, mix time, quantity, and amount of water introduced.

C. Maintain equipment in proper operating condition, with drums cleaned before charging each batch. Schedule rates of delivery in order to prevent delay of placing the concrete after mixing, or holding dry-mixed materials too long in the mixer before the addition of water and admixtures.

3.3 TRANSPORTING CONCRETE

A. Transport and place concrete not more than 90 minutes after water has been added to the dry ingredients.

B. Take care to avoid spilling and separation of the mixture during transportation.

C. Do not place concrete in which the ingredients have been separated.

D. Do not retemper partially set concrete.

E. Use suitable and approved equipment for transporting concrete from mixer to forms.

3.4 CONCRETE PLACEMENT

A. General: Place concrete continuously so that no concrete will be placed on concrete which has hardened sufficiently to cause the formation of seams or planes of weakness within the section. If a section cannot be placed continuously, provide construction joints as specified in Section 3.4.E of these Specifications only as approved by ENGINEER. Deposit concrete as nearly as practical in its final location to avoid segregation due to rehandling or flowing. Do not subject concrete to any procedure which will cause segregation.
   1. Screed concrete which is to receive other construction to the proper level to avoid excessive skimming or grouting.
   2. Do not use concrete which becomes non-plastic and unworkable, or does not meet the required quality control limits, or which has been contaminated by foreign materials. Do not use retempered concrete. Remove rejected concrete from the job site and dispose of it in an acceptable location.
   3. Do not place concrete until all forms, bracing, reinforcement, and embedded items are in final and secure position.
   4. Unless otherwise approved, place concrete only when ENGINEER is present.
   5. Allow a minimum of 48 hours before placing concrete against a slab or wall already in place.

B. Concrete Conveying:
   1. Handle concrete from the point of delivery and transfer to the concrete conveying equipment and to the locations of final deposit as rapidly as

practical by methods which will prevent segregation and loss of concrete mix materials.

2. Provide mechanical equipment for conveying concrete to ensure a continuous flow of concrete at the delivery end. Provide runways for wheeled concrete conveying equipment from the concrete delivery point to the locations of final deposit. Keep interior surfaces of conveying equipment, including chutes, free of hardened concrete, debris, water, snow, ice, and other deleterious materials.
3. Do not use chutes for distributing concrete unless approved in writing by ENGINEER.
    a. Provide sketches showing methods by which chutes will be employed when requesting such approval.
    b. Design chutes, if permitted, with proper slopes and supports to permit efficient handling of the concrete.
4. Pumping concrete is permitted, however do not use aluminum pipe for conveying.

C. Placing Concrete into Forms:
1. Deposit concrete in forms in horizontal layers not deeper than 18-inches and in a manner to avoid inclined construction joints. Where placement consists of several layers, place concrete at such a rate that concrete which is being integrated with fresh concrete is still plastic.
2. Do not permit concrete to free-fall within the form from a distance exceeding 6 feet. Use "elephant trunks" to prevent free fall and excessive splashing on forms and reinforcement.
3. Remove temporary spreaders in forms when concrete placing has reached the elevation of such spreaders.
4. Consolidate concrete placed in forms by mechanical vibrating equipment supplemented by hand-spading, rodding, or tamping. Use equipment and procedures for consolidation of concrete in accordance with the applicable recommended practices of ACI 309. Vibration of forms and reinforcing will not be permitted, unless otherwise accepted by ENGINEER.
5. Do not use vibrators to transport concrete inside of forms. Insert and withdraw vibrators vertically at uniformly spaced locations not farther than the visible effectiveness of the machine. Place vibrators to rapidly penetrate the layer of concrete and at least 6-inches into the preceding layer. Do not insert vibrators into lower layers of concrete that have begun to set. At each insertion, limit the duration of vibration to the time necessary to consolidate the concrete and complete embedment of reinforcement and other embedded items without causing segregation of the mix.
6. Do not place concrete in beam and slab forms until the concrete previously placed in columns and walls is no longer plastic.
7. Force concrete under pipes, sleeves, openings, and inserts from one side until visible from the other side to prevent voids.

D. Placing Concrete Slabs:

1. Deposit and consolidate concrete slabs in a continuous operation, within the limits of construction joints, until the placing of a panel or section is completed.
2. Consolidate concrete during placing operations using mechanical vibrating equipment, so that concrete is thoroughly worked around reinforcement and other embedded items and into corners.
3. Consolidate concrete placed in beams and girders of supported slabs, and against bulkheads of slabs on ground, as specified for formed concrete structures.
4. Bring slab surfaces to the correct level. Smooth the surface, leaving it free of humps or hollows. Do not sprinkle water on the plastic surface. Do not disturb the slab surfaces prior to beginning finishing operations.

E. Bonding for Next Concrete Pour: Roughen surfaces of set concrete at all joints, except where bonding is obtained by use of a concrete bonding agent. Construction joints shown on the Drawings are specified in Section 03251, Concrete Joints, of these Specifications. Clean surfaces of laitance, coatings, loose particles, and foreign matter. Roughen surfaces in a manner to expose bonded aggregate uniformly and to not leave laitance, loose particles of aggregate, or damaged concrete at the surface.
   1. Prepare for bonding of fresh concrete to new concrete that has set but is not fully cured, as follows:
      a. Thoroughly wet the surface but allow no freestanding water.
      b. For horizontal surfaces, place a 2-inch layer of mortar, one part sand and one part cement with water, over the hardened concrete surface.
      c. Place fresh concrete before the mortar has attained its initial set.
   2. Bonding of fresh concrete to fully-cured hardened concrete or existing concrete and horizontal surfaces which will receive a topping shall be accomplished by using an epoxy-resin bonding agent as specified in Section 03251, Concrete Joints, of these Specifications.

F. Quality of Concrete Work:
   1. Make all concrete solid, compact and smooth, and free of laitance, cracks, and cold joints.
   2. All concrete for liquid retaining structures, and all concrete in contact with earth, water, or exposed directly to the elements shall be watertight.
   3. Cut out and properly replace to the extent ordered by ENGINEER, or repair to the satisfaction of ENGINEER, surfaces which contain cracks or voids, are unduly rough, or are in any way defective. Thin patches or plastering will not be acceptable.
   4. All leaks through concrete and cracks, holes, or other defective concrete in areas of potential leakage, shall be repaired and made watertight by CONTRACTOR.
   5. Repair, removal, and replacement of defective concrete as ordered by ENGINEER shall be at no additional cost to OWNER.

G. Hot Weather Placing:
   1. When hot weather conditions exist that would seriously impair the quality and strength of concrete, place concrete in compliance with ACI 305 and as herein specified.
   2. Cool ingredients before mixing to maintain concrete temperature at time of placement below 80° F when the temperature is rising and below 85° F when the temperature is falling. Mixing water may be chilled or chopped ice or liquid nitrogen may be used to control the concrete temperature provided the water equivalent of the ice is calculated in the total amount of mixing water.
   3. Cover reinforcing steel with water-soaked burlap if it becomes too hot, so that the steel temperature will not exceed the ambient air temperature immediately before embedment in concrete.
   4. Wet forms thoroughly before placing concrete.
   5. Do not place concrete at a temperature so as to cause difficulty from loss of slump, flash set, or cold joints.
   6. Do not use set-control admixtures unless approved by ENGINEER in mix designs.
   7. Obtain ENGINEER'S approval of other methods and materials proposed for use.

3.5 FINISH OF FORMED SURFACES

A. Rough Form Finish:
   1. Standard rough form finish shall be the concrete surface having the texture imparted by the form material used, with tie holes and defective areas repaired and patched with mortar of one part cement to 1-1/2 parts sand and all fins and other projections exceeding 1/4-inch in height rubbed down or chipped off.
   2. Use rough form finish for the following:
      a. Exterior vertical surfaces up to 1 foot below grade.
      b. Interior exposed vertical surfaces of liquid containers up to 1 foot below liquid level.
      c. Interior and exterior exposed beams and undersides of slabs.
      d. Other areas shown.

B. Smooth Form Finish:
   1. Produce smooth form finish by selecting form materials which will impart a smooth, hard, uniform texture. Arrange panels in an orderly and symmetrical manner with a minimum of seams. Repair and patch defective areas as above with all fins or other projections completely removed and smoothed.
   2. Use smooth form finish for surfaces that are to be covered with a coating material. The material may be applied directly to the concrete or may be a covering bonded to the concrete such as waterproofing, damp proofing, painting or other similar system.

C. Smooth Rubbed Finish:

1. Provide smooth rubbed finish to concrete surfaces which have received smooth form finish as follows:
    a. Rubbing of concrete surfaces not later than the day after form removal.
    b. Moistening of concrete surfaces and rubbing with carborundum brick or other abrasive until a uniform color and texture is produced. Do not apply cement grout other than that created by the rubbing process.
2. Except where surfaces have been previously covered as specified above, use smooth rubbed finish as follows:
    a. Repair all defects and patch all tie holes prior to rubbed finish.
    b. Grind all form finish and joint lines, smooth. Remove all curing compound and form oil.
    c. Combine one part Portland cement to 1-1/2 parts fine sand by volume and mix with water to a consistency of thick paint. Blend standard Portland cement with white Portland cement in amounts determined by trial patches. Final color of dried grout to match color of adjacent concrete surfaces.
    d. Thoroughly wet concrete surface with bonding agent and water mix. Apply grout uniformly by rubber or cork float. Fill all surface holes. Remove excess grout by rubbing with clean wet burlap to remove any visible grout film.
    e. Provide sample panel for approval, prior to start of Work.

D. Related Unformed Surfaces:
1. At tops of walls, horizontal offsets, and similar unformed surfaces occurring adjacent to formed surfaces, strike off smooth and finish with a texture matching the adjacent formed surfaces. Continue the final surface treatment of formed surfaces uniformly across the adjacent unformed surfaces, unless otherwise shown.

3.6 MONOLITHIC SLAB FINISHES

A. Float Finish:
1. After placing concrete slabs, do not work the surface further until ready for floating. Begin floating when the surface water has disappeared or when the concrete has stiffened sufficiently. Check and level the surface plane to a tolerance not exceeding 1/4-inch in 10 feet when tested with a 10 foot straightedge placed on the surface at not less than two different angles. Cut down high spots and fill all low spots. Uniformly slope surfaces to drains. Immediately after leveling, refloat the surface to a uniform, smooth, granular texture.
2. Use float finish for the following:
    a. Interior exposed horizontal surfaces of liquid containers, except those to receive grout topping.
    b. Exterior below grade horizontal surfaces.
    c. Surfaces to receive additional finishes, except as shown or specified.

B. Trowel Finish:
   1. After floating, begin the first trowel finish operation using a power-driven trowel. Begin final troweling when the surface produces a ringing sound as the trowel is moved over the surface.
   2. Consolidate the concrete surface by the final hand troweling operation. Finish shall be free of trowel marks, uniform in texture and appearance, and with a surface plane tolerance not exceeding 1/8-inch in 10 feet when tested with a 10 foot straightedge. Grind smooth surface defects that would telegraph through applied floor covering system.
   3. Use trowel finish for the following:
      a. Interior exposed slabs unless otherwise shown or specified.
      b. Slabs to receive resilient floor finishes.

C. Non-Slip Broom Finish:
   1. Immediately after float finishing, slightly roughen the concrete surface by brooming in the direction perpendicular to the main traffic route. Use fiber bristle broom unless otherwise directed. Coordinate the required final finish with ENGINEER before application.
   2. Use non-slip broom finish for the following:
      a. Exterior exposed horizontal surfaces subject to light foot traffic.
      b. Interior and exterior concrete steps and ramps.
      c. Horizontal surfaces which will receive a grout topping or a concrete equipment base slab.

3.7 CONCRETE CURING AND PROTECTION

A. General:
   1. Protect freshly placed concrete from premature drying and excessive cold or hot temperature, and maintain without drying at a relatively constant temperature for the period of time necessary for hydration of the cement and proper hardening of the concrete.
   2. Start initial curing after placing and finishing concrete as soon as free moisture has disappeared from the concrete surface. Keep continuously moist for not less than 72 hours.
   3. Begin final curing procedures immediately following initial curing and before the concrete has dried. Continue final curing for at least seven days and in accordance with ACI 301 procedures. For concrete sections over 30-inches thick, continue final curing for an additional seven days, minimum. Avoid rapid drying at the end of the final curing period.

B. Final Curing Methods:
   1. Perform curing of concrete by moist curing, or by moisture-retaining cover curing, or curing compound.
      a. For curing, use water that is free of impurities which could etch or discolor exposed, natural concrete surfaces.
   2. Provide moisture curing by any of the following methods:

a. Keeping the surface of the concrete continuously wet by covering with water.
b. Continuous water-fog spray.
c. Covering the concrete surface with the specified absorptive cover, thoroughly saturating the cover with water, and keeping the absorptive cover continuously wet with sprinklers or porous hoses. Cover shall be Transguard 4000 or approved equal.
d. Place absorptive cover so as to provide coverage of the concrete surfaces and edges, with a 4-inch lap over adjacent absorptive covers.

3. Provide moisture retaining cover curing as follows:
   a. Cover the concrete surfaces with the specified moisture retaining cover for curing concrete, placed in the widest practical width with sides and ends lapped at least 3-inches and sealed by waterproof tape or adhesive. Immediately repair any holes or tears during the curing period using cover material and waterproof tape.
4. Provide liquid curing compound as follows:
   a. Apply the specified curing compound to all concrete surfaces when permitted by ENGINEER. Slabs to receive terrazzo floors, chemical resistant heavy-duty concrete topping or ceramic tile, shall not be cured with liquid curing compound, but shall be moisture cured. The compounds shall be applied immediately after final finishing in a continuous operation by power spray equipment in accordance with the manufacturer's directions. Recoat areas which are subjected to heavy rainfall within three hours after initial application. Maintain the continuity of the coating and repair damage to the coat during the entire curing period. For concrete surfaces which will be in contact with raw or potable water, the manufacturer shall certify that the curing compound used is EPA approved.

C. Curing Formed Surfaces:
   1. Cure formed concrete surfaces, including the undersides of girders, beams, supported slabs, and other similar surfaces with the forms in place for the full curing period. If forms are removed earlier, continue curing by methods specified above, as applicable.

D. Curing Unformed Surfaces:
   1. Final cure unformed surfaces, such as slabs, floor topping, and other flat surfaces by using the appropriate method specified above.

E. Temperature of Concrete During Curing:
   1. When the atmospheric temperature is 40° F and below, maintain the concrete temperature between 50° F and 70° F continuously throughout the curing period. When necessary, make arrangement before concrete placing for heating, covering, insulation or housing as required to maintain the specified temperature and moisture conditions continuously for the concrete curing

period. Provide cold weather protection complying with the requirements of ACI 306.

2. When the atmospheric temperature is 80° F and above, or during other climatic conditions which will cause too rapid drying of the concrete, make arrangements before the start of concrete placing for the installation of wind breaks or shading, and for fog spraying, wet sprinkling, or moisture-retaining covering. Protect the concrete continuously for the concrete curing period. Provide hot weather protection complying with the requirements of ACI 305, unless otherwise specified.
3. Maintain concrete temperature as uniformly as possible, and protect from rapid atmospheric temperature changes. Avoid temperature changes in concrete which exceed 5° F in any one hour and 50° F in any 24-hour period.

F. Protection from Mechanical Injury:
   1. During the curing period, protect concrete from damaging mechanical disturbances including load stresses, heavy shock, excessive vibration, and from damage caused by rain or flowing water. Protect all finished concrete surfaces from damage by subsequent construction operations.

3.8 FIELD QUALITY CONTROL

A. CONTRACTOR shall employ a testing laboratory to perform field quality control testing. ENGINEER will make slump tests and will direct the number of tests and cylinders required. CONTRACTOR shall make standard compression test cylinders and entrained air tests as specified below, under the direct inspection by ENGINEER. CONTRACTOR shall furnish all necessary assistance required by ENGINEER. CONTRACTOR shall also furnish all labor, material, and equipment required, including cones, rods, molds, air tester, thermometer, curing in a heated storage box, and all other incidentals required. Above will be subject to approval by ENGINEER. CONTRACTOR shall furnish all necessary storage, curing, and transportation required by the testing.

B. Quality Control Testing During Construction:
   1. Perform sampling and testing for field quality control during the placement of concrete, as follows:
      a. Sampling Fresh Concrete: ASTM C172.
      b. Slump: ASTM C143; one test for each concrete load at point of discharge; and one for each set of compressive strength test specimens.
      c. Air Content: ASTM C231; one for every other concrete load at point of discharge, or when required by an indication of change.
      d. Compressive Strength Tests: ASTM C39; one set of compression cylinders for each 50 cubic yards or fraction thereof, of each mix design placed in any one day or for each 2,500 square feet of surface area placed; one specimen tested at seven days, and two specimens tested at 28 days.
         1) Adjust mix if test results are unsatisfactory and resubmit for ENGINEER'S approval.

2) Concrete which does not meet the strength requirements is subject to rejection and removal from the Work, or to other such corrective measures as directed by ENGINEER, at the expense of CONTRACTOR.

e. Compression Test Specimens: ASTM C31; make one set of four standard cylinders for each compressive strength test, unless otherwise directed.
   1) Cast, store, and cure specimens as specified in ASTM C31.

f. Concrete Temperature: Test hourly when air temperature is 40° F and below, and when 80° F and above; and each time a set of compression test specimens is made.

2. The testing laboratory shall submit certified copies of test results directly to ENGINEER and CONTRACTOR within 24 hours after tests are made.

C. Evaluation of Quality Control Tests:

1. Do not use concrete delivered to the final point of placement which has slump or total air content outside the specified values.

2. Compressive strength tests for laboratory-cured cylinders will be considered satisfactory if the averages of all sets of three consecutive compressive strength tests results equal or exceed the 28 day design compressive strength of the type or class of concrete; and, no individual strength test falls below the required compressive strength by more than 500 psi.

   a. Where questionable field conditions may exist during placing concrete or immediately thereafter, strength tests of specimens cured under field conditions will be required by ENGINEER to check the adequacy of curing and protecting of the concrete placed. Specimens shall be molded at the same time and from the same samples as the laboratory cured specimens.
      1) Provide improved means and procedures for protecting concrete when the 28 day compressive strength of field-cured cylinders is less than 85% of companion laboratory-cured cylinders.
      2) When laboratory-cured cylinder strengths are appreciably higher than the minimum required compressive strength, field-cured cylinder strengths need not exceed the minimum required compressive strength by more than 500 psi even though the 85% criterion is not met.
      3) If individual tests of laboratory-cured specimens produce strengths more than 500 psi below the required minimum compressive strength, or if tests of field-cured cylinders indicate deficiencies in protection and curing, provide additional measures to assure that the load-bearing capacity of the structure is not jeopardized. If the likelihood of low-strength concrete is confirmed and computations indicate the load-bearing capacity may have been significantly reduced, tests of cores drilled from the area in question will be required at CONTRACTOR'S expense.

   b. If the compressive strength tests fail to meet the minimum requirements specified, the concrete represented by such tests will be considered

deficient in strength and subject to replacement, reconstruction or to other action approved by ENGINEER.

D. Testing Concrete Structure for Strength:
   1. When the OWNER employed testing laboratory results indicate that the strength of the in-place concrete does not meet Specification requirements, CONTRACTOR shall employ, at his expense, the services of a concrete testing service to take cores drilled from hardened concrete for compressive strength determination. Tests shall comply with ASTM C42 and the following:
      a. Take at least three representative cores from each member or suspect area at locations directed by ENGINEER.
      b. Strength of concrete for each series of cores will be considered satisfactory if their average compressive strength is at least 85% and no single core is less than 75% of the 28 day required compressive strength.
      c. Report test results in writing to ENGINEER on the same day that tests are made. Include in test reports the Project identification name and number, date, name of CONTRACTOR, name of concrete testing service, location of test core in the structure, type, or class of concrete represented by core sample, nominal maximum size aggregate, design compressive strength, compression breaking strength and type of break (corrected for length-diameter ratio), direction of applied load to core with respect to horizontal plane of the concrete as placed, and the moisture condition of the core at time of testing.
   2. Fill core holes solid with non-shrink, high strength grout, and finish to match adjacent concrete surfaces.
   3. Conduct static load test and evaluations complying with ACI 318 if the results of the core tests are unsatisfactory, or if core tests are impractical to obtain, as directed by ENGINEER.
   4. OWNER, at his own expense, may also conduct the same tests using the laboratory of OWNER'S choice when the test results show that the concrete does not meet the specifications. The CONTRACTOR shall coordinate with the OWNER and ENGINEER prior to taking any representative samples and beginning the testing process.

3.9 MISCELLANEOUS CONCRETE ITEMS

A. Filling-In:
   1. Fill-in holes and openings left in concrete structures for the passage of work by other contractors, unless otherwise shown or directed, after the work of other contractors is in place. Mix, place and cure concrete as herein specified, to blend with in-place construction. Provide all other miscellaneous concrete filling shown or required to complete the Work.

B. Curbs:

1. Provide monolithic finish to interior curbs by stripping forms while concrete is still green and steel-troweling surfaces to a hard, dense finish with corners, intersections, and terminations slightly rounded.
2. Exterior curbs shall have rubbed finish for vertical surfaces and a broomed finish for top surfaces.

C. Equipment Bases:
1. Unless specifically shown otherwise, provide concrete bases for all pumps and other equipment. Construct bases to the dimensions shown, or as required to meet manufacturer's requirements and drawing elevations. Where no specific elevations are shown, bases shall be 6-inches thick and extend 3-inches outside the metal equipment base or supports. Bases to have smooth trowel finish, unless a special finish such as terrazzo, ceramic tile or heavy-duty concrete topping is required. In those cases, provide appropriate concrete finish.
2. Include all concrete equipment base work not specifically included under other Sections or other contracts.
3. In general, place bases up to 1-1/2-inches below the metal base. Properly shim equipment to grade and fill 1-1/2-inch void with non-shrink grout, as specified in Section 03600, Grout.

3.10 CONCRETE ENCASEMENT OF ELECTRICAL DUCT BANKS

A. Mix red dye into concrete to be used for encasement.

B. Provide a minimum covering of 3-inches of concrete over the top and sides of the conduit and conduit supports.

C. Conduit shall be firmly fixed in place before pouring concrete. Vibrate the concrete to ensure filling of all spaces between conduits.

D. Where duct banks pass under paved or unpaved roadways, concrete encasement shall be reinforced with No. 4 longitudinal steel bars placed at each "corner" and at 18-inches o.c. along the top and sides of the duct bank. Place No. 3 tie-bars placed tranversely at 18-inches o.c. Maintain a minimum cover of 2-inches of concrete over the reinforcing bars.

E. Install a bare stranded copper duct bank ground in each duct bank. Make the ground electrically continuous throughout the entire duct bank system and connect to switchgear and motor control center ground busses and to steel conduit extension of the underground duct system.

3.11 CONCRETE REPAIRS

A. Repair of Formed Surfaces:
1. Repair exposed-to-view formed concrete surfaces, that contain defects which adversely affect the appearance of the finish. Surface defects that require repair include color and texture irregularities, cracks, spalls, air bubbles,

honeycomb, rock pockets, and holes left by the rods and bolts; fins and other projections on the surface; and stains and other discolorations that cannot be removed by cleaning.

2. Repair concealed formed concrete surfaces that may contain defects that adversely affect the durability of the concrete. Surface defects that require repair include cracks in excess of 0.01-inch wide, cracks of any width and other surface deficiencies which penetrate to the reinforcement or completely through non-reinforced sections, honeycomb, rock pockets, holes left by tie rods and bolts, and spalls except minor breakage at corner.

B. Repair structural cracks and cracks in water-holding structures. Method of Repair of Formed Surfaces:
   1. Repair and patch defective areas with cement mortar immediately after removal of forms and as directed by ENGINEER.
   2. Cut out honeycomb, rock pockets, voids over 1/2-inch diameter, and holes left by tie rods and bolts, down to solid concrete but, in no case, to a depth of less than 1-inch. Make edges of cuts perpendicular to the concrete surface. Before placing the cement mortar, thoroughly clean, dampen with water, and brush-coat the area to be patched with the specified bonding agent.
      a. For exposed-to-view surfaces, blend white Portland cement and standard Portland cement so that, when dry, the patching mortar color will match the color of the surrounding concrete. CONTRACTOR shall impart texture to repaired surfaces to match texture of existing adjacent surfaces. Provide test areas at inconspicuous locations to verify mixture, texture and color match before proceeding with the patching. Compact mortar in place and strike off slightly higher than the surrounding surface.
   3. Cracks which require repair shall be pressure grouted using one of the following. Apply in accordance with the manufacturer's directions and recommendations.
      a. Sikadur 35, Hi-Mod L.V., and Sikadur 31, Hi-Mod Gel, as manufactured by Sika Corporation Company.
      b. Euco Epoxy #452 Epoxy System, as manufactured by The Euclid Chemical Company.
      c. Or approved equal.
   4. Fill holes extending through concrete by means of a plunger-type gun or other suitable device from the least exposed face, using a flush stop held at the exposed face to ensure completely filling.
   5. Sandblast exposed-to-view surfaces that require removal of stains, grout accumulations, sealing compounds, and other substances marring the surfaces. Use sand finer than No. 30 and air pressure from 15 to 25 psi.

C. Repair of Unformed Surfaces:
   1. Test unformed surfaces, such as monolithic slabs, for smoothness and to verify surface plane to the tolerances specified for each surface and finish. Correct low and high areas as herein specified.

2. Test unformed surfaces sloped to drain for trueness of slope, in addition to smoothness, using a template having the required slope. Correct high and low areas as herein specified.
3. Repair finish of unformed surfaces that contain defects which adversely affect the durability of the concrete. Surface defects as such, include crazing, cracks in excess of 0.01-inch wide or which penetrate to the reinforcement or completely through non-reinforced sections regardless of width, spalling, popouts, honeycomb, rock pockets, and other objectionable conditions.
4. Repair structural cracks and cracks in water-holding structures.

D. Methods of Repair of Unformed Surfaces:
1. Correct high areas in unformed surfaces by grinding, after the concrete has cured sufficiently so that repairs can be made without damage to adjacent areas.
2. Correct low areas in unformed surfaces during, or immediately after completion of surface finishing operations by cutting out the low areas and replacing with fresh concrete. Finish repaired areas to blend into adjacent concrete. Use one of the following. Apply in accordance with the manufacturer's directions and recommendations.
   a. Euco Poly-Patch, as manufactured by The Euclid Chemical Company.
   b. Sikatop 122, as manufactured by Sika Corporation.
   c. Or approved equal.
3. Repair defective areas, except random cracks and single holes not exceeding 1-inch diameter, by cutting out and replacing with fresh concrete. Remove defective areas to sound concrete with clean, square cuts, and expose reinforcing steel with at least 3/4-inch clearance all around. Dampen all concrete surfaces in contact with patching concrete and brush with the specified bonding agent. Place patching concrete before grout takes its initial set. Mix patching concrete of the same materials and proportions to provide concrete of the same type or class as the original adjacent concrete. Place, compact and finish as required to blend with adjacent finished concrete. Cure in the same manner as adjacent concrete.
4. Repair isolated random cracks and single holes not over 1-inch diameter, by the dry-pack method. Groove the top of cracks, and cut out holes to sound concrete and clean of dust, dirt and loose particles. Dampen all cleaned concrete surfaces and brush with the specified bonding agent. Place dry pack before the cement grout takes its initial set. Mix dry-pack, consisting of one part Portland cement to 2-1/2 parts fine aggregate passing a No. 16 mesh sieve, using only enough water as required for handling and placing. Compact dry pack mixture in place and finish to match adjacent concrete. Keep patched areas continuously moist for not less than 72 hours.
5. Cracks which require repair shall be pressure grouted using one of the following. Apply in accordance with the manufacturer's directions and recommendations.
   a. Sikadur 35, Hi-Mod L.V., and Sikadur 31, Hi-Mod Gel, as manufactured by Sika Corporation.

b. Euco Epoxy #452 Epoxy System, as manufactured by The Euclid Chemical Company.
c. Or approved equal.

6. Assure that surface is acceptable for flooring material to be installed in accordance with manufacturer's recommendations.

E. Other Methods of Repair:
1. Repair methods not specified above may be used if approved by ENGINEER.

++ END OF SECTION ++

SECTION 03600

GROUT

PART 1 - GENERAL

1.1 SUMMARY

A. All epoxy-based grouting as indicated in the equipment manufacturer's specification and as shown on the Drawings shall apply to this Section. These products are supplied by the CONTRACTOR installing the grout. Epoxy grouts shall be used for grouting equipment baseplates subject to dynamic and impact loading, in areas subject to chemical attack and for securing anchors in existing concrete, unless otherwise noted.

B. All cement-based grouting as indicated in the equipment manufacturer's specification and as shown on the Drawings shall apply to this Section. These products are supplied by the CONTRACTOR installing the grout. They shall be used for grouting of equipment and column baseplates and setting pre-cast concrete and anchor bolts that are not epoxy grouted.

C. Classes of Ordinary Cement Type Grout:
   1. Class "A" Ordinary Cement type grout shall have a compression strength of 4,000 psi and include the following:
      a. Foundation grout.
      b. Construction joint grout.
   2. Class "B" ordinary cement type grout shall have a compression strength of 3000 psi and include the following:
      a. Bonded topping grout for concrete tank.

D. Related Sections:
   1. Section 01300, Submittals.
   2. Section 03251, Concrete Joints.
   3. Section 03300, Cast-In-Place-Concrete.

1.2 REFERENCES

A. ASTM C109, Standard Test Method for Compressive Strength of Hydraulic Cement Mortars.

B. ASTM C191, Standard Test Method for Time of Set of Hydraulic Cement by Vicat Needle.

C. ASTM C531, Test Method for Linear Shrinkage and Coefficient of Thermal Expansion of Chemical Resistant Mortars, Grouts and Monolithic Surfacings.

D. ASTM C579, Test Method for Compressive Strength of Chemical Resistant Mortars and Monolithic Surfacings.

E. ASTM C827, Standard Test Method for Change in Height at Early Ages of Cylindrical Specimens from Cementitious Mixtures.

F. CPR Creep Test, Test Method for Creep of Epoxy Grouts.

G. CRD C621, Corps of Engineers Specification for Nonshrink Grout.

1.3 SUBMITTALS

A. Descriptive submittals shall be made in accordance with the Data Reference Symbols defined in Section 01300, Submittals.
   1. Epoxy Grout:
      a. Letters of Certification of Compliance on materials, equipment, etc.
      b. Installation instructions, operating and/or service manuals, and all other data pertinent to operating or servicing the complete apparatus. Preventative maintenance instructions and recommended frequency.
      c. Service data sheets showing design performance, utility requirements, etc., as applicable to the specific duty for which the equipment is furnished.
      d. Material gradation, design mix, job mix formula, and/or material analysis.
   2. Cement Grout:
      a. Letters of Certification of Compliance on materials, equipment, etc.
      b. Installation instructions, operating and/or service manuals, and all other data pertinent to operating or servicing the complete apparatus. Preventative maintenance instructions and recommended frequency.
      c. Service data sheets showing design performance, utility requirements, etc., as applicable to the specific duty for which the equipment is furnished.
      d. Material gradation, design mix, job mix formula, and/or material analysis.

B. Each Shop Drawing Submittal shall include a hard copy of the relevant Specification Section and shall be clearly marked to indicate whether the requirements for equipment and/or services in the Specification Section are met by writing "accept" or "deviate" next to each Paragraph. If clarifications are needed to any of the Paragraphs in the Specification Sections due to deviations, they shall be addressed next to the Paragraph as such and explained further with any additional information necessary. If any exceptions and/or deviations are proposed to any of the Specifications, they shall be clearly noted as such in the Submittal, and an explanation of any deviation and/or exception shall be provided. The CONTRACTOR shall furnish equipment and/or services as specified if an exception and/or deviation is rejected. Failure to include a copy of the marked-up specification sections, along with justification(s) for any requested deviations to the

specification requirements, with the submittal shall be sufficient cause for rejection of the entire submittal with no further consideration.

1.4 DELIVERY, STORAGE, AND HANDLING

A. All epoxy-based grouts shall be prepackaged, three-component systems resin, hardener, and specially blended aggregate. They shall be delivered to the job site in original, unopened package, clearly labeled with the manufacturer's identification and printed instructions. The grout components shall be stored at 70° ±5° F in a dry environment.

B. All cement-based grouts shall be pre-blended, prepackaged materials requiring only the addition of water. They must be delivered to the job site in original, unopened packages, clearly labeled with the manufacturer's identification and printed instructions. All cement-based materials shall be stored and handled in accordance with the recommendations of the manufacturer and the American Concrete Institute.

1.5 ENVIRONMENTAL CONDITIONS

A. Refer to the manufacturer's literature for any physical or environmental limitations or contact the manufacturer directly.

1.6 WARRANTY

A. The material manufacturer shall warranty that the non-shrink grout shall never go below its initial placement volume when tested in accordance with ASTM C827.

PART 2 - PRODUCTS

2.1 MANUFACTURERS

A. U.S. Grout Corporation Five Star Grout, a subsidiary of Five Star Products, Inc., Fairfield, CT.

B. Sika Corp., Lyndhurst, NJ.

C. The Euclid Chemical Company.

D. Master Builders, Inc.

2.2 MATERIALS

A. Epoxy grouts must meet the following performance requirements. They must be 100% solids system and shall not contain any non-reactive diluents.
   1. Volume Change:

a. The grout shall show no shrinkage (0.0%) and a maximum 2.0% expansion from time of placement when tested according to ASTM C827, modified to use a ball with a specific gravity between 0.9 and 1.1.

2. Compressive Strength:
   a. The grout shall show a minimum seven day compressive strength of 5,000 psi when tested according to ASTM C579.

B. Cement-based grouts must meet the following performance requirements at maximum water. They must not contain expansive cement or metallic particles such as aluminum powder or iron filings.
   1. Plastic Volume Change:
      a. The grout shall show no shrinkage (0.0%) and a maximum 4.0% expansion from time of placement until final set when tested according to ASTM C827.
   2. Hardened Volume Change:
      a. The grout shall show no shrinkage (0.0%) and a maximum 0.2% expansion in the hardened state when tested according to CRD C-621.
   3. Compressive Strength:
      a. The grout shall show a minimum 28 day compressive strength of 4,000 psi when tested according to ASTM C109, restrained.
   4. Creep:
      a. The grout shall show creep equal to or less than 0.5 by 10-3 inches/inch at 180° F for a minimum of one year when tested according to CPR Creep Test (extrapolated data is not acceptable).
   5. Working Time:
      a. The grout shall show a consistency greater than 125% for a minimum 45 minutes when tested according to applicable consistency sections of ASTM C827 at 15 minute intervals.

C. Ordinary Cement-Sand Grout: Prepare design mixes of ordinary cement grout. Mixes subject to the following limitations:
   1. Cement: Portland cement, ASTM C150, Type II.
   2. Aggregates: ASTM C33 and as herein specified.
      a. Do not use aggregates containing soluble salts or other substances such as iron sulfides, pyrite, marcasite, ochre, or other materials that can cause stains on exposed concrete surfaces.
      b. Fine Aggregate: Clean, sharp, natural sand free from loam, clay, lumps, or other deleterious substances.
         1) Dune sand, bank run sand, and manufactured sand are not acceptable.
      c. Coarse Aggregate:
         1) Crushed stone, processed from material rock or stone.
         2) Washed gravel, either natural or crushed. Use of slag and pit or bank run gravel is not permitted.
         3) Coarse Aggregate Size: Size to be ASTM C33, No. 7 for Class "B" grout. Coarse aggregate not permitted in Class "A" grout.

3. Admixtures: Provide admixtures produced by established reputable manufacturers and use in compliance with the manufacturer's printed instruction. Do not use admixtures that have not been incorporated and tested in the accepted mixes, unless otherwise authorized in writing by ENGINEER. Refer to Section 03300, Cast-In-Place-Concrete, for additional admixture requirements.
4. Proportioning and Design of Mixes: Prepare design mixes for each class of grout. Mixes subject to the following limitations:
    a. Class "A" Grout:
        1) Specified 28 day Compressive Strength: 4,000 psi.
        2) Maximum Water-Cement Ratio by Weight: 0.45.
        3) Fine Aggregate meeting ASTM C33.
        4) Air Content Percentage: 4-1/2%.
        5) Minimum Cement Content in Pounds per Cubic Yard: 658.
    b. Class "B" Grout:
        1) Specified 28-day Compressive Strength: 3,000 psi.
        2) Maximum Water-Cement Ratio by Weight: 0.50.
        3) Fine and Coarse Aggregate (No. 7) meeting ASTM C33
        4) Air Content Percentage: 4-1/2%
        5) Minimum Cement Content in Pounds per Cubic Yard: 611
5. Use an independent testing company acceptable to ENGINEER for preparing and reporting proposed mix designs.
    a. The testing company shall not be the same as used for field quality control testing, unless approved by ENGINEER.
6. Proportion mixes by either laboratory trial batch or field experience methods, using materials to be employed on the Project for grout required. Comply with ACI 211.1 and report to ENGINEER the following data:
    a. Complete identification of aggregate source of supply.
    b. Tests of aggregates for compliance with specified requirements.
    c. Scale weight of each aggregate.
    d. Absorbed water in each aggregate.
    e. Brand, type, and composition of cement.
    f. Brand, type, and amount of each admixture.
    g. Amounts of water used in trial mixes.
    h. Proportions of each material per cubic yard.
    i. Gross weight and yield per cubic yard of trial mixtures.
    j. Measured slump.
    k. Measured air content.
    l. Compressive strength developed at seven and 28 days, from not less than three test specimens cast for each seven day and 28 day test and for each design mix.
7. Submit written reports to ENGINEER of proposed mix of grout at least 30 days prior to start of Work. Do not begin grout production until mixes have been approved by ENGINEER.

8. Laboratory Trial Batches: When laboratory trial batches are used to select grout proportions, prepare test specimens and conduct strength tests as specified in ACI 301, Section 4 - Proportioning. However, 4,000 psi mixes need not be designed for greater than 4,600 psi, regardless of the production facilities standard deviation.
9. Field Experience Method: When field experience methods are used to select grout proportions, establish proportions as specified in ACI 301, Section 4.
10. Admixtures: Use air-entraining admixture in all grout. Provide not less than 4-1/2%, or more than 7-1/2% entrained air. Use amounts of admixtures as recommended by the manufacturer for climatic conditions prevailing at the time of placing. Adjust quantities and types of admixtures as required to maintain quality control. Do not use admixtures which have not been incorporated and tested in the accepted design mix, not been incorporated and tested in writing by ENGINEER.
11. Slump Limits: Proportion and design mixes to result in grout slump at the point of placement of not more than 5-inches.

PART 3 - EXECUTION

3.1 INSPECTION

A. Inspect concrete surfaces to receive grout and verify that they are free of ice, frost, dirt, grease, oil, curing compounds, paints, impregnations and all loose material or foreign matter likely to affect the bond or performance of the grout.

B. Newly placed concrete shall have been placed and cured for 28 days prior to grouting procedures.

C. Inspect baseplates for rust, oil, and other deleterious substances. Clean as required by grout manufacturer.

3.2 PREPARATION

A. Cementitious:
   1. In order to ensure proper bond to the baseplate and the concrete, all grease, oil, dirt, curing compounds, laitance and other deleterious materials must be completely removed from the concrete and bottom of baseplate.
   2. Roughen the surfaces by chipping, sandblasting, or other mechanical means to assure bond of the grout to the existing concrete. Loose or broken concrete shall be removed.
   3. After concrete surfaces have been washed clean, they shall then be saturated with water for 24 hours prior to placement of cement-based grout.
   4. Upon completion of saturation period excess water shall be removed with clean compressed air prior to grouting.
   5. Forms to be built as needed.

B. Epoxy:
   1. Adhesion of epoxy is required, all grease, oil, dirt, curing compounds, laitance, and other deleterious materials must be completely removed from the concrete and the mating metal member (bolt, baseplate, etc.).
   2. Roughen the surfaces by chipping, sandblasting or other mechanical means to assure bond of the grout to the existing concrete. Loose or broken concrete shall be removed.
   3. Do not wet concrete substrate.
   4. Forming or other leak proof containment is always required with epoxy grout. Forms must be liquid tight. Caulking such as glazier's putty, butyl rubber caulking, or duct seal should be used. All forms may be lined with polyethylene for easy grout release.

3.3 INSTALLATION

A. Cementitious:
   1. Carefully read and understand the manufacturer's instructions as printed on the unit.
   2. Mixing: A mortar mixer is recommended. Pre-wet the mixer, empty excess water. Add pre-measured amount of potable water to mixer, then add grout. Mix for at least three, but not more than five, minutes; then place.
   3. Placing: Grout may be dry-packed, flowed, vibrated or pumped into place. All grouting shall take place from one side of a plate to the other to avoid trapping air.
   4. Cutback: Just before the grout has reached its final set, the grout must be cut back to the lower edge of the plate. A 45 degree angle or vertical cutback is recommended.
   5. Curing: The grout shall be kept moist for a minimum of three days. The method needed to protect the grout will depend on temperature, humidity, and wind.
   6. Cleanup: Upon completion of placement, all excess grout shall be removed and discarded before it can set up.

B. Epoxy:
   1. Carefully read and understand the manufacturer's instructions as printed on the packaging.
   2. Mixing:
      a. Grout shall be mixed according to the procedures recommended by the manufacturer. For large volume placements, a mortar mixer with moving blades is preferred. For smaller quantities, use an appropriate container and stirrer. Do not vary the ratio of components or add solvent to change the consistency of the mix.
   3. Placing:

a. Ambient conditions shall be monitored and grout manufacturer contacted for cold weather (50° F) and hot weather (90° F) placement procedures. All grouting should take place from one side to avoid trapping air.

4. Cutback:
   a. Epoxy cannot be trimmed after set. It must be left at final placement level with all chamfer strips built into forms.
5. Curing:
   a. Consult the owners, designer, and grout manufacturer for appropriate cure schedule. In no case should any surface in contact with grout be allowed to fall below 50° F for a minimum of 48 hours.
6. Cleanup:
   a. Upon completion of placement, all excess grout shall be removed before it can set up.

C. Bonded Topping for Concrete Tanks:
1. Prior to proceeding with Work, insure that tank equipment has been checked for accurate adjustment.
2. Use a metal screed on the tank mechanism to check the surface elevation of the base slab and to ensure that at least the thickness of the grout shown can be placed. If there is insufficient room for this grout, remove the high spots in the concrete or adjust the mechanism, or both, as necessary to provide proper grout thickness and equipment clearance.
3. Prior to placement of the grout topping, remove all laitance, debris, and loose and foreign material from the base slab. Use waterblasting, sandblasting, or other methods acceptable to ENGINEER.
4. Thoroughly wet the base slab at least 24 hours before placing the grout topping.
5. Apply concrete bonding adhesive specified in Section 03251, Concrete Joints, to concrete surface prior to placing grout topping. Follow adhesive manufacturer's procedures and recommendations for application and curing requirements.
6. In lieu of concrete bonding adhesive on new concrete tanks, the concrete surface to receive the grout topping shall be roughened with a rolling tamp. Prior to placing the grout topping, the surface must be wetted and cleaned as described above and a cement water paste shall be applied to the surface with a stiff broom.
7. Where recommended by manufacturer, use the tank mechanism to screed the grout on the tank floor as it is placed. Have a representative of the equipment manufacturer present during the screening operation, unless otherwise approved by ENGINEER. Screed in accordance with the manufacturer's instructions.
8. Cure and protect the grout topping as specified in Section 03300, Cast-In-Place Concrete.
9. Levelness of bonded topping to comply with requirements of Section 03300, Cast-In-Place Concrete.
10. Float finish topping as specified in Section 03300, Cast-In-Place Concrete.

++ END OF SECTION ++

SECTION 04820

REINFORCED UNIT MASONRY ASSEMBLIES

PART 1 - GENERAL

1.1 DESCRIPTION

A. Scope:
   1. CONTRACTOR shall provide all labor, materials, equipment, and incidentals as shown, specified, and required to furnish and install masonry.

B. The specification covers the following items:
   1. Concrete masonry units.
   2. Hollow concrete masonry units.
   3. Mortar and grout.
   4. Reinforcement and anchorage.
   5. Accessories.
   6. Lintels.
   7. Mortar mixes.
   8. Mortar mixing.
   9. Grout mixes.
   10. Grout mixing.
   11. Preconstruction meeting.
   12. Masonry accessories such as wire joint reinforcement, reinforcing bars, and control joint filters.
   13. Foam insulation.

1.2 QUALITY ASSURANCE

A. Reference Standards: Comply with applicable provisions and recommendations of the following, except as otherwise shown or specified:
   1. TMS 402/602 - Building Code Requirements and Specifications for Masonry Structures; American Concrete Institute International.
   2. ASTM A580/A580M - Standard Specification for Stainless Steel Wire.
   3. ASTM A951 - Standard Specification for Masonry Joint Reinforcement.
   4. ASTM C90 - Standard Specification for Loadbearing Concrete Masonry Units.
   5. ASTM C94/C94M - Standard Specification for Ready-Mixed Concrete.
   6. ASTM C140 - Standard Test Methods of Sampling and Testing Concrete Masonry Units and Related Units.
   7. ASTM C144 - Standard Specification for Aggregate for Masonry Mortar.
   8. ASTM C150 - Standard Specification for Portland Cement.
   9. ASTM C270 - Standard Specification for Mortar for Unit Masonry.
   10. ASTM C404 - Standard Specification for Aggregates for Masonry Grout.
   11. ASTM C476 - Standard Specification for Grout for Masonry.

12. ASTM C516 - Standard Specification for Vermiculite Loose Fill Insulation.
13. ASTM C518 - Standard Test Method for Steady-State Thermal Transmission Properties by Means of the Heat Flow Meter Apparatus.
14. ASTM C549 - Standard Specification for Perlite Loose Fill Insulation.
15. ASTM C780 - Standard Test Method for Preconstruction and Construction Evaluation of Mortars for Plain and Reinforced Unit Masonry.
16. ASTM C979 - Standard Specification for Pigments for Integrally Colored Concrete; 2005.
17. ASTM C1019 - Standard Test Method for Sampling and Testing Grout.
18. ASTM C1072 - Standard Test Method for Measurement of Masonry Flexural Bond Strength.
19. ASTM C1314 - Standard Test Method for Compressive Strength of Masonry Prisms.
20. ASTM E84 - Standard Test Method for Surface Burning Characteristics of Building Materials.
21. ASTM E518 - Standard Test Methods for Flexural Bond Strength of Masonry.
22. IMIAWC (CW) - Recommended Practices & Guide Specifications for Cold Weather Masonry Construction; International Masonry Industry All-Weather Council.
23. IMIAWC (HW) - Recommended Practices & Guide Specifications for Hot Weather Masonry Construction; International Masonry Industry All-Weather Council; current edition.
24. American Society for Testing and Materials (ASTM):
    a. C33, Specification for Concrete Aggregates.
    b. C90, Specification for Hollow Load-Bearing Concrete Masonry Units.
    c. C140, Method of Sampling and Testing Concrete Masonry Units.
    d. C331, Specification for Lightweight Aggregates for Concrete Masonry Units.
    e. C426, Test Method for Drying Shrinkage of Concrete Block.
25. International Building Code (IBC).
26. American Society for Testing and Materials (ASTM):
    a. A82, Specification for Steel Wire, Plain, for Concrete Reinforcement.
    b. A153, Specification for Zinc Coating (Hot-Dip) on Iron and Steel Hardware.
    c. A615, Specification for Deformed and Plain Billet-Steel Bars for Concrete Reinforcement.
    d. A641, Specification for Zinc-Coated (Galvanized) Carbon Steel Wire.
    e. C516, Specification for Vermiculite Loose Fill Insulation.
    f. C549, Specification for Perlite Loose Fill Insulation.
    g. C920, Specification for Elastomeric Joint Sealants.
    h. D2000, Classification System for Rubber Products in Automotive Applications.
    i. D2287, Specification for Nonrigid Vinyl Chloride Polymer and Copolymer Molding and Extrusion Compounds.
27. International Building Code (IBC) Standards:

a. 21-16 - Field Tests Specimens for Mortar.
b. 21-18 - Method of Sampling and Testing Grout.

1.3 SUBMITTALS

A. Shop Drawings: Submit for approval the following:
1. Product Data: Provide data for masonry units, fabricated wire reinforcement, and mortar and grout.
2. Indicate bar sizes, spacings, reinforcement quantities, bending and cutting schedules, reinforcement supporting and spacing devices, control joints, and accessories.
3. Include elevations of each wall indicating type and layout of units.
4. Samples for Verification: Submit two samples of each decorative block units, as selected by ARCHITECT from initial samples, to illustrate color, texture, and extremes of color range.
5. Manufacturer's Certificate: Certify that masonry units and grout meet or exceed specified requirements.
6. Testing Agency Qualifications:
   a. Prior to start of Work, submit agency name, address, and telephone number, and names of full time registered ENGINEER and responsible officer.
7. Test Reports: Results of required laboratory tests.
8. Each Shop Drawing Submittal shall include a hard copy of the relevant Specification Section and shall be clearly marked to indicate whether the requirements for equipment and/or services in the Specification Section are met by writing "accept" or "deviate" next to each Paragraph. If clarifications are needed to any of the Paragraphs in the Specification Sections due to deviations, they shall be addressed next to the Paragraph as such and explained further with any additional information necessary. If any exceptions and/or deviations are proposed to any of the Specifications, they shall be clearly noted as such in the Submittal, and an explanation of any deviation and/or exception shall be provided. The CONTRACTOR shall furnish equipment and/or services as specified if an exception and/or deviation is rejected. Failure to include a copy of the marked-up specification sections, along with justification(s) for any requested deviations to the specification requirements, with the submittal shall be sufficient cause for rejection of the entire submittal with no further consideration.

1.4 QUALITY ASSURANCE

A. Preconstruction Testing: Employ and pay a qualified independent testing agency to perform the preconstruction testing indicated.

B. Single-Source Responsibility for Masonry Units: Obtain exposed masonry units of a uniform texture and color, or a uniform blend within the ranges accepted for these

characteristics, from one source and by a single manufacturer for each different product required.

C. Single-Source Responsibility for Mortar Materials: Obtain mortar ingredients of a uniform quality, including color for exposed masonry, from one manufacturer for each cementitious component and from one source or producer for each aggregate.

D. Comply with provisions of TMS 402 and TMS 602, except where exceeded by requirements of the Contract Documents or local building codes.

E. Protection of Masonry: During erection, cover tops of walls, projections, and sills with waterproof sheeting at end of each day's Work. Cover partially completed masonry when construction is not in progress.
   1. Extend cover a minimum of 24-inches down both sides and hold cover securely in place.
   2. Where one wythe of multiwythe masonry walls is completed in advance of other wythes, secure cover a minimum of 24 inches down face next to unconstructed wythe and hold cover in place.
   3. Do not apply uniform roof loads for at least 12 hours and concentrated loads for at least 3 days after building masonry walls or columns.
   4. Stain Prevention: Prevent grout, mortar, and soil from staining the face of masonry to be left exposed or painted. Immediately remove grout, mortar, and soil that comes in contact with such masonry.
      a. Protect base of walls from rain-splashed mud and mortar splatter by coverings spread on ground and over wall surface.
   5. Hot-Weather Requirements: Protect unit masonry work when temperature and humidity conditions produce excessive evaporation of water from mortar and grout. Provide shade and wind breaks and use cooled materials as required. Do not apply mortar to substrates with temperatures of 100° F and above.

1.5 MOCK-UP

A. Prior to installing unit masonry, construct a masonry wall as a mock-up panel to demonstrate aesthetic effects as well as other qualities of materials and execution. Construct L-shaped mock-up, each leg sized 4 feet long by 4 feet high, which includes mortar and accessories, reinforcement, and grout. Clean exposed faces of mock-up according to cleaning requirements indicated.
   1. Coursing: Provide the following types of masonry, in accordance with the Schedule at the end of this Section:
      a. number 1 (at grade) and course number 2: Concrete Masonry Type "B."
      b. Course number 3 through course number 6: Concrete Masonry Type "A."

B. Locate mock up so as not to interfere with work; protect wall from the weather until the work is Substantially Complete.

C. Prior to requesting approval from ARCHITECT, clean mock wall up in accordance with Part 3 of this Section.

D. ARCHITECT may reject mock-ups for color, texture, blending of masonry, relationship of mortar colors to masonry unit colors, tooling of joints, aesthetic qualities of appearance, aesthetic qualities of workmanship, and other material and construction qualities.
   1. Replace rejected mock-ups with new mock-ups, of materials as directed by ARCHITECT.
      a. Build as many job mock-up panels as required to obtain ARCHITECT'S acceptance of the Work. Costs and time associated with approval process of mock-ups is considered incidental to the work. No separate payment or time extension will be allowed.

E. Mock-up may not remain as part of the Work.

F. Acceptance of mockup does not constitute approval of deviations from the Contract Documents contained in mockup, unless such deviations are specifically approved by ARCHITECT in writing.

G. Retain and maintain mockup during construction in an undisturbed condition as a standard for judging the completed work.
   1. Remove mock-up from site upon completion of the work and when directed by ARCHITECT.

1.6 PRE-INSTALLATION MEETING

A. Convene one week before starting work of this section.
   1. Attendees: CONTRACTOR, ENGINEER, ARCHITECT and masonry subcontractor and other concerned parties.
   2. Agenda: Review the progress of other construction activities and preparations for masonry construction, including, but not limited to deliveries, review of Shop Drawings, review of mock-up, possible conflicts, special or unique details, weather limitations, acceptability of substrates, testing requirements, possible conflicts, manufacturer's recommendations, and coordination with other trades.

1.7 DELIVERY, STORAGE, AND HANDLING

A. Deliver, handle, and store masonry units by means of that will prevent mechanical damage and contamination by other materials. If units become wet, do not install until they are in an air-dried condition.

B. Store masonry accessories, including metal items, to prevent corrosion and accumulation of dirt and oil.

C. Store insulation in accordance with manufacturer's instructions.

1.8 ENVIRONMENTAL REQUIREMENTS

A. Cold Weather Requirements: Comply with IMIAWC (CW).

B. Hot Weather Requirements: Comply with IMIAWC (HW).

PART 2 - PRODUCTS

2.1 CONCRETE MASONRY UNITS

A. Concrete Block: Comply with referenced standards and as follows:
   1. Size: Provide units with nominal face dimensions and nominal depth as indicated in the Schedule at the end of this Section.
   2. Special Shapes: Provide non-standard blocks configured for corners, lintels, headers, control joint edges, and other detailed conditions, and other detailed conditions.
      a. Provide corner units where installation would expose cores of units.
   3. Load-Bearing Units: ASTM C90, medium weight.
      a. Both hollow and solid block, as indicated.
      b. Unit Compressive Strength: Provide units with minimum average net-area compressive strength of 2,000 psi.
      c. Aggregates: Volcanic Scoria shall meet ASTM C331.
   4. Exposed faces: Provide pattern and color as indicated in Schedule at the end of this Section.
   5. Integral Water Repellent: All concrete masonry units which are in contact with earth or are exposed to the exterior, are to be produced with liquid polymeric, integral water-repellent admixture that does not reduce flexural bond strength. Units made with integral water repellent, when tested as a wall assembly made with mortar containing integral water-repellent manufacturer's mortar additive according to ASTM E514, with test period extended to 24 hours, show no visible water or leaks on the back of the test specimen.
      a. Product: Subject to compliance with requirements, provide units made with "Dry-Block" by W.R. Grace & Co., or approved equal.

2.2 MORTAR AND GROUT MATERIALS

A. Portland Cement: ASTM C150, Type I/II.

B. Hydrated Lime: ASTM C207, Type S.

C. Mortar Aggregate: ASTM C144.
   1. For joints less than 1/4-inch use aggregate graded with 100% passing the No. 16 sieve.

D. Grout Aggregate: ASTM C404, coarse or fine.

E. Pigments for Colored Mortar: Pure, concentrated mineral pigments specifically intended for mixing into mortar and complying with ASTM C979.
   1. Color: As scheduled.

F. Water: Clean and potable.

2.3 REINFORCEMENT AND ANCHORAGE

A. Reinforcing Steel: ASTM A615, Grade 60, deformed billet steel bars.

B. Horizontal Joint Reinforcement: Manufacture in accordance with ASTM A951, with materials that conform to the following requirements:
   1. Single Wythe Joint Reinforcement: Ladder type; hot-dip galvanized wire conforming to ASTM 153/A153M; 0.1483-inch (9 gage) side rods with 0.1483-inch (9 gage) cross rods; with prefabricated corner and tee units; width as required to provide not more than 1 inch and not less than 1/2-inch of mortar coverage on each exposure.

C. Fasteners: Expansion anchors as recommended by manufacturer for substrate.

D. Color Admixture: Type containing maximum 15% lime proof, inorganic compounds, unless recommended otherwise by manufacturer, and maximum 3% carbon black by weight of cement, with:
   1. Factory blend for full color saturation of mortar joint.
   2. Packaging for unitized jobsite mixing at ratio of 1 unit of color per sack of Portland cement.

2.4 ACCESSORIES

A. Masonry Control Joints:
   1. Preformed Control Joints: Polyvinyl chloride material. Provide with corner and tee accessories, fused joints.
   2. Sealant and Joint Backing: In accordance with Section 07900, Joint Sealers.

B. Cleaning Solution: Non-acidic, not harmful to masonry work or adjacent materials.

2.5 LINTELS

A. Provide prefabricated or built-in-place masonry lintels. Use specially formed bond beam lintel units with reinforcement bars placed as indicated and filled with grout.

2.6 MORTAR MIXES

A. Mortar for Unit Masonry: ASTM C270, using the Proportion Specification.
   1. All masonry: Cement-Lime Type S, with a minimum average 28 day compressive strength of 2000psi.
   2. Use of masonry cement is not allowed.

B. Colored Mortar: Proportion selected pigments and other ingredients to match color(s) in Schedule, without exceeding manufacturer's recommended pigment-to-cement ratio.

2.7 MORTAR MIXING

A. Thoroughly mix mortar ingredients in accordance with ASTM C270 and in quantities needed for immediate use.

B. Maintain sand uniformly damp immediately before the mixing process.

C. Add mortar color and admixtures in accordance with manufacturer's instructions. Provide uniformity of mix and coloration.

D. Do not use anti-freeze compounds to lower the freezing point of mortar.

E. If water is lost by evaporation, re-temper only within two hours of mixing.

F. Use mortar within two hours after mixing at temperatures of 90° F, or two-and-one-half hours at temperatures under 40° F.

G. Average compressive strength: 2000 psi.

2.8 GROUT MIXES

A. Bond Beams, Lintels, and Grouted Cells: 2000 psi strength at 28 days; 7 - 8-inches slump; mix in accordance with ASTM C476.
   1. Fine grout for spaces with smallest horizontal dimension of 2-inches or less.
   2. Coarse grout for spaces with smallest horizontal dimension greater than 2-inches.
   3. In accordance with ASTM C476, do not use water reducing admixtures.

2.9 GROUT MIXING

A. Mix grout in accordance with ASTM C94/C94M.

B. Thoroughly mix grout ingredients in quantities needed for immediate use in accordance with ASTM C476 for fine and coarse grout.

C. Add admixtures in accordance with manufacturer's instructions; mix uniformly.

D. Do not use anti-freeze compounds to lower the freezing point of grout.

2.10 PRECONSTRUCTION TESTING

A. Concrete Masonry: Test each type, class, and grade of concrete masonry unit in accordance with ASTM C140 for conformance to requirements of this specification.

2.11 MASONRY ACCESSORIES

A. Control Joint Filler: The key shall be of the width and shape indicated on the Drawings. Conforming to ASTM D2000 or ASTM D2287. Manufacturers: One of the following or equal:
   1. AA Wire Products, Inc., AA2000 Blok-Tite.
   2. Dur-O-Wall, Rapid Poly-Joint.
   3. Or approved equal.

B. Water Repellent: Water based, methacrylate polymer with aqueous polysiloxane.
   1. 1. Loose-Granular Perlite Insulation: ASTM C549, Type II (surface treated for water repellency and limited moisture absorption) or IV (surface treated for water repellency and to limit dust generation).
      a. Manufacturer: Producer Members of Perlite Institute, Inc.; www.perlite.org.
   2. Loose-Granular Vermiculite Insulation: ASTM C516, Type II (surface treated for water repellency and limited moisture absorption), Grade 3 (Fine), complying with 29 CFR 1926 by containing less than 0.10% by weight of asbestos and that demonstration shows will not release asbestos fibers in excess of 0.1 fibers/cu. cm under reasonably foreseeable job site conditions

C. Weep Holes:
   1. Preformed clear butyrate rectangular plastic weep holes 3/8" x 1-1/2" x 3-1/2".
   2. Provide #342 Rectangular Plastic Weep Holes by Hohmann & Barnard, Inc., or approved equal.

PART 3 - EXECUTION

3.1 EXAMINATION

A. Verify that field conditions are acceptable and are ready to receive masonry.

B. Verify that related items provided under other sections are properly sized and located.

C. Verify that built-in items are in proper location, and ready for roughing into masonry work.

3.2 PREPARATION

A. Direct and coordinate placement of metal anchors supplied for installation under other sections.

B. Thoroughly clean foundations of laitance, grease, oil, mud, dirt, mortar droppings, and other objectionable matter.

C. Provide temporary bracing during installation of masonry work. Maintain in place until building structure provides permanent bracing.

D. For areas where high-lift grouting will be employed, provide cleanout openings as follows:
   1. Hollow Masonry: Not less than 8-inches high at the bottom of each cell to be grouted, formed by cutting out face shell of masonry unit.

E. Protect adjacent construction with appropriate means from mortar droppings and other effects of laying of concrete masonry units.

3.3 COURSING

A. Establish lines, levels, and coursing indicated. Protect from displacement.

B. Maintain masonry courses to uniform dimension. Form vertical and horizontal joints of uniform thickness.

C. Concrete Masonry Units:
   1. Bond: Running.
   2. Coursing: One unit and one mortar joint to equal 8-inches.

3.4 PLACING AND BONDING

A. Lay solid masonry units in full bed of mortar, with full head joints, uniformly jointed with other work.

B. Lay hollow masonry units with face shell bedding on head and bed joints.

C. Buttering corners of joints or excessive furrowing of mortar joints is not permitted.

D. When positions of units shift after mortar has stiffened, bond is broken, or cracks are formed, relay units in new mortar.

E. Interlock intersections and external corners.

F. Do not shift or tap masonry units after mortar has achieved initial set. Where adjustment must be made, remove mortar and replace.

G. Perform job site cutting of masonry units with proper tools to provide straight, clean, unchipped edges. Prevent broken masonry unit corners or edges.

H. Mortar Joints:
   1. Make joints straight, clean, smooth, and uniform in thickness.
   2. Exposed interior joints: Tool joints slightly concave.
   3. Exposed exterior joints: Match joints at existing Administration Building located on site.

4. Make vertical and horizontal joints 3/8-inch thick.
5. Where fresh masonry joins totally or partially set masonry, clean and roughen set masonry before laying new units.

3.5 REINFORCEMENT AND ANCHORAGE

A. Provide reinforcement and anchorage as indicated.

B. Reinforcement Bars: Secure at locations indicated and to avoid displacement during grouting. Minimum spacing between bars or to masonry surfaces shall be one bar diameter.

C. Comply with installation requirements of Section 03200, Concrete Reinforcement.

D. Welding of splices is not permitted.

E. Where horizontal and vertical bars are spliced and adjacent lap splices are separated by more than 3-inches, the lap splice length shall be 72 bar diameters. Where adjacent lap splices are separated by 3-inches or less, the lap splice length shall be increased by 1.3 times or the lap splices shall be staggered at least 24 bar diameters with no increase in length.

F. Hold vertical reinforcing bars in position at top and bottom and at intervals not exceeding 200 bar diameters. Use steel wire bar positioners to position bars and tie reinforcing bars to dowels with wire ties.

G. Obtain acceptance of reinforcement placement before grouting.

H. Reinforced Hollow Unit Masonry: Keep vertical cores to be grouted clear of mortar, including bed area of first course.

I. Place horizontal reinforcement and solidly grout bond beam units in place.

J. Provide wire mesh at openings in bottom of bond beams to support grout where walls are not grouted solid.

3.6 WIRE JOINT REINFORCEMENT

A. Lap splice longitudinal wire joint reinforcement 12” minimum. Splices shall contain at least one cross wire of each piece of reinforcement in the lapped distance.

B. Place longitudinal wires in approximate centers of mortar beds with minimum 5/8-inch mortar cover on exposed faces.

C. Provide corners and intersecting masonry walls with prefabricated wire joint reinforcement tees or ells.

D. Rake intersecting joints 1/2-inch and caulk joints.

3.7 GROUTING

A. Use either high-lift or low-lift grouting techniques, at Contractor's option, subject to other limitations of contract documents.

B. Low-lift Grouting: Hollow unit masonry to be grouted by the low lift method shall be constructed and grouted in lifts not exceeding 4 feet. Double wythe masonry which will be grouted by the low-lift method shall be constructed and grouted in lifts not exceeding 8-inches. Slushing with mortar will not be permitted.
   1. Place grout for each pour continuously and consolidate immediately; do not interrupt pours for more than 1-1/2 hours.

C. High-lift Grouting: If grouting is accomplished by the high-lift method, double wythe masonry shall be allowed to cure at least 72 hours and hollow unit masonry shall be allowed to cure at least 24 hours before grouting. In double wythe construction, vertical grout barriers shall be built across the grout space to the height of the grout lift. Grout barriers shall not be spaced more than 30 feet apart. Grout shall be placed in lifts not to exceed 6 feet in depth. Each lift shall be allowed to set for 10 minutes after initial consolidation of grout before successive lift is placed. The full height of each section of wall shall be grouted in one day.

D. Fill all cores in hollow concrete masonry units with exposed faces with grout unless otherwise indicated.

E. Fill all cores in hollow concrete masonry units that contain vertical reinforcing or that are located below adjacent grade.

F. Fill cores in hollow concrete masonry units with grout 24-inches under bearing plates, beams, lintels, posts, and similar items, unless otherwise indicated.

G. When grouting stops for one hour or longer, form horizontal construction joints by stopping grout placement 1-1/2-inches below top of uppermost unit containing grout.

H. After placement, consolidate grout using mechanical immersion vibrators designed for consolidating grout.

I. Placement:
   1. Use a hand bucket, concrete hopper, or grout pump.
   2. Place grout in final position within 1-1/2 hours after mixing.
   3. Place grout so as to completely fill the grout spaces without segregation of the aggregates.
   4. Do not insert vibrators into lower grout placements that are in a semi-solidified state.

3.8 CONTROL JOINTS

A. Provide in masonry walls where indicated on the Drawings.

B. Install preformed control joint device in continuous lengths. Seal butt and corner joints in accordance with manufacturer's instructions. Insert control joint filler in joints as wall is constructed.

C. Form expansion joint as detailed.

D. Provide "T" type control joint material at all surfaces between existing walls and new CMU construction.

3.9 BUILT-IN WORK

A. As work progresses, install built-in metal door frames, anchor bolts, and plates and other items to be built into the work and furnished under other sections.

B. Install built-in items plumb, level, and true to line.

C. Bed anchors of metal door frames in adjacent mortar joints. Fill frame voids solid with grout.
   1. Fill adjacent masonry cores with grout minimum 16-inches from framed openings.

D. Provide masonry lintels where shown and where openings of more than 12-inches are shown without structural steel or other supporting lintels.

E. Do not build into masonry construction organic materials that are subject to deterioration.

3.10 CUTTING CONCRETE MASONRY UNITS

A. When possible, use full units of the proper size in lieu of cut units. Cut units as required to form chases, openings, for anchorage, and for other appurtenances.

B. Cut and fit units with power-driven carborundum or diamond disc blade saw.

3.11 INSULATION INSTALLATION AT CONCRETE MASONRY

A. Install either Foam Insulation or Loose-Fill Insulation, types as specified, in accordance with manufacturer's recommendations at the following locations:
   1. Walls between heated areas and the exterior.
   2. Walls between air-conditioned or evaporative cooled spaces and the exterior.
   3. Interior walls between heated and non-heated spaces.
   4. Interior walls between air-conditioned and non-air-conditioned spaces.
   5. Interior walls between air-conditioned and evaporative-cooled spaces.

B. Install insulation into all non-grouted cores of masonry units, taking care to fill voids completely. Maintain inspection ports to show presence of insulation at extremities of each pour area. Close after confirming complete coverage. Limit fall of loose fill insulation to 1 story in height, but not exceeding 20 feet.

3.12 TOLERANCES

A. Lay masonry plumb, true to line, with courses level. Keep bond pattern plumb throughout. Lay masonry within the following tolerances:
   1. Maximum variation from the plumb in the lines and surfaces of columns, walls, and in the flutes and surfaces of fluted or split faced blocks:
      a. In adjacent masonry units: 1/8-inch.
      b. In 10 feet: 1/4-inch.
      c. In any story or 20 feet maximum: 3/8-inch.
      d. In 40 feet or more: 1/2-inch.
   2. Maximum variations from the plumb for external corners, expansion joints, and other conspicuous lines:
      a. In any story or 20 feet maximum: 1/4-inch.
      b. In 40 feet or more: 1/2-inch.
   3. Maximum variations form the level or grades indicated on the Drawings for exposed lintels, sills, parapets, horizontal grooves, and other conspicuous lines:
      a. In any bay or 20 feet maximum: 1/4-inch.
      b. In 40 feet or more: 1/2-inch.
   4. Maximum variations of the linear building lines from established position in plan and related portion of columns, walls, and partitions:
      a. In any bay or 20 feet maximum: 1/2-inch.
      b. In 40 feet or more: 3/4-inch.
   5. Maximum variation in cross sectional dimensions of columns and in thickness of walls:
      a. Minus: 1/4-inch.
      b. Plus: 1/2-inch.

3.13 CUTTING AND FITTING

A. Cut and fit for pipes, conduit, sleeves, and structural elements. Coordinate with other sections of work to provide correct size, shape, and location.
   1. Provide firestopping at joints and voids in fire-rated assemblies.

B. Obtain approval prior to cutting or fitting masonry work not indicated or where appearance or strength of masonry work may be impaired.

3.14 OPENINGS AND LINTELS

A. Place horizontal reinforcement in fully grouted bond beam units.

B. Use lintel block units where underside of lintel will be exposed.

C. Provide minimum of 8-inch bearing at each end of lintel.

D. Embed reinforcing bars minimum 24-inches or 40 bar diameters, whichever is longer, into wall past edges of openings or as indicated on the Drawings.

E. At corners, provide 90 degree bend with equivalent total embedment.

3.15 STEEL DOOR FRAMES

A. Anchor and fully grout jambs and head of steel door frames connected to concrete unit masonry.

B. Fill frames with grout as each 2 feet of concrete unit masonry is laid.

3.16 BEARING PLATES

A. Provide minimum of 12-inches of grouted concrete unit masonry below steel or plastic bearing plates and beams bearing on masonry walls.

3.17 ANCHOR BOLTS

A. Hold anchor bolts in place with template during grouting to assure precise alignment.

B. Do not cut or ream members being anchored or use other means to accommodate misaligned anchor bolts in roof deck support angles.

C. Provide minimum 6-inch wide grouted concrete unit masonry entirely around anchor bolts and other attachment devices.

3.18 ENCLOSURES

A. Where concrete masonry units enclose conduit, pipes, stacks, ducts, and similar items, construct chases, cavities, and similar spaces as required, whether or not such spaces are indicated on the Drawings.

B. Point openings around flush mounted electrical outlet boxes with mortar, including flush joints above boxes.

C. Do not cover enclosures until inspected and when appropriate, tested.

3.19 OTHER EMBEDDED ITEMS

A. Build in wall plugs, accessories, flashings, pipe sleeves, and other items required to be built-in as the masonry work progresses.

3.20 PATCHING

A. Patch exposed concrete masonry units at completion of the Work and in such manner that patching will be indistinguishable from similar surroundings and adjoining construction.

3.21 WATER CURING

A. Protect concrete masonry units from drying too rapidly by frequently fogging or sprinkling so walls will always be visibly damp for minimum three days.

3.22 MISCELLANEOUS

A. Build in required items, such as anchors, flashings, sleeves, frames, structural steel, lintels, anchor bolts, and metal fabrications, as required for complete installation.

3.23 FIELD QUALITY CONTROL

A. Contractor shall employ and pay for services of an independent testing agency to perform specified testing, and inspection.
   1. Materials which fail to meet specified requirements shall be replaced at Contractor's expense.

B. Concrete Masonry Unit Tests: Test each variety of concrete unit masonry in accordance with ASTM C140 for conformance to requirements of this specification.

C. Mortar Tests: Test each type of mortar in accordance with ASTM C780; provide two tests for each day that mortar is being installed.

D. Test and evaluate grout in accordance with ASTM C1019 procedures.
   1. Test with same frequency as specified for mortar.

E. Prism Tests: When required, test masonry and mortar panels for compressive strength in accordance with ASTM C1314 and for flexural bond strength in accordance with ASTM C1072 or ASTM E518; perform tests and evaluate results during construction.

F. Tests shall include compressive strength, linear shrinkage, total absorption, moisture content as percent of total absorption, and unit weight.

G. Follow requirements for "Special Inspection" in IBC.

3.24 REPAIRING, POINTING, AND CLEANING

A. Remove and replace masonry units that are loose, chipped, broken, stained, or otherwise damaged or if units do not match adjoining units. Install new units to

match adjoining units; install in fresh mortar or grout, pointed to eliminate evidence of replacement.

B. Pointing: During the tooling of joints, enlarge voids and holes, except weep holes, and completely fill with mortar. Point-up joints, including corners, openings, and adjacent construction, to provide a neat, uniform appearance. Prepare joints for application of sealants.

C. Determination of acceptable workmanship, color appearance, and texture appearance will be at the sole discretion of the ENGINEER.

3.25 CLEANING

A. Remove excess mortar and mortar smears as work progresses.

B. Replace defective mortar. Match adjacent work.

C. Clean soiled surfaces with cleaning solution.
   1. Test cleaning methods on sample wall panel; leave one-half of panel uncleaned for comparison purposes. Obtain ENGINEER'S approval of sample cleaning before proceeding with cleaning of masonry.
   2. Clean concrete masonry by cleaning method indicated in NCMA TEK 8-2 applicable to type of stain present on exposed surfaces.

D. Use non-metallic tools in cleaning operations.

3.26 PROTECTION OF FINISHED WORK

A. Without damaging completed work, provide protective boards at exposed external corners which are subject to damage by construction activities.

B. Bracing:
   1. Adequately brace masonry walls over 8 feet in height to prevent overturning and to prevent collapse unless wall is adequately supported by permanent supporting elements so wall will not overturn or collapse.
   2. Keep bracing in place until permanent supporting elements of structure are in place.

C. Limited Access Zone:
   1. Establish limited access zone prior to start of masonry wall construction.
   2. Zone shall be immediately adjacent to wall and equal to height of wall to be constructed plus 4 feet by entire length of wall on unscaffolded side of wall.
   3. Limit access to zone to workers actively engaged in constructing wall. Do not permit other persons to enter zone.
   4. Keep zone in place until wall is adequately supported or braced by permanent supporting elements to prevent overturning and collapse.

3.27 GROUTING EQUIPMENT

A. Grout Pumps:
   1. Do not pump grout through aluminum tubes.
      a. Operate pumps to produce a continuous stream of grout without air pockets.
   2. Upon completion of each days pumping, eject grout from pipeline without contamination or segregation of the grout. Remove waste materials and debris from the equipment. Dispose of waste materials, debris, and all flushing water outside the masonry.

B. Vibrators:
   1. Internal vibrators shall maintain a speed of not less than 5,000 impulses per minute when submerged in the grout.
   2. Maintain at least one spare vibrator at the site at all times.
   3. Apply vibrators at uniformly spaced points not further apart than the visible effectiveness of the machine.
   4. Limit duration of vibration to time necessary to produce satisfactory consolidation without causing segregation.

3.28 SCHEDULES

A. Concrete Masonry Units Type "A":
   1. Pattern and Color: Smooth face, manufacturer's standard gray color.
   2. Nominal Dimensions: 8-inches high x 8-inches deep x 16-inches long unless indicated otherwise.
   3. Mortar: Manufacturer's standard gray color.
   4. Locations: Interior and Exterior locations.

B. Insulation: Provide loose fill insulation or foam insulation at non-grouted cells in exterior building walls; terminate 4-inches above roof membrane unless noted otherwise.
   1. Ensure that no insulation gets into cells which are to be filled with grout.

++ END OF SECTION ++

SECTION 05051

ANCHOR BOLTS, TOGGLE BOLTS, AND CONCRETE INSERTS

PART 1 - GENERAL

1.1 DESCRIPTION

A. Scope:
   1. CONTRACTOR shall provide all labor, materials, equipment and incidentals as shown on the Drawings, specified, and required to furnish and install anchor bolts, toggle bolts and concrete inserts.

B. This Section includes all anchor bolts, toggles and inserts required for the Work, but not specified under other Sections.

C. The types of Work using the anchor bolts, toggles and inserts include, but are not limited to the following:
   1. Hangers and brackets.
   2. Equipment.
   3. Piping.
   4. Grating and floor plate.
   5. Electrical, plumbing and HVAC work.
   6. Metal, wood, and plastic fabrications.
   7. Partitions and ceilings.
   8. Shelf angles and masonry lintels.
   9. Structural members and accessories.

D. Related Sections: CONTRACTOR shall coordinate the requirements of the Work in this Section along with the requirements of the Sections listed below which includes, but is not necessary limited to, Work that is directly related to this Section.
   1. Section 05500, Metal Fabrications.

1.2 QUALITY ASSURANCE

A. Reference Standards: Comply with the applicable provisions and recommendations of the following, except as otherwise shown and specified.
   1. ASTM A36, Specification for Carbon Structural Steel.
   2. ASTM A123, Specification for Zinc (Hot-Dip Galvanized) Coatings on Iron and Steel Products.
   3. ASTM A153, Specification for Zinc Coating (Hot-Dip) on Iron and Steel Hardware.
   4. ASTM A307, Specification for Carbon Steel Bolts and Studs, 60,000 psi Tensile Strength.

5. ASTM A484, Specification for General Requirements for Stainless and Heat-Resisting Steel Bars, Billets and Forgings.
6. ASTM A525, Specification for General Requirements for Steel Sheet, Zinc-Coated (Galvanized) by the Hot-Dip Process.
7. ASTM A536, Specification for Ductile Iron Castings.
8. ASTM A570, Specification for Steel, Sheet and Strip, Carbon, Hot-Rolled, Structural Quality.
9. ASTM B633, Specification for Electrodeposited Coatings of Zinc on Iron and Steel.
10. ASTM F593, Stainless Steel Bolts; Hex Cap Screws, and Studs.
11. Federal Specification FF-S-325 for Concrete Expansion Anchors.
12. Federal Specifications WW-H-171E for Malleable Iron.
13. ICBO, International Conference of Building Officials.

B. Inserts shall be ICBO, UL or FM approved.

C. Toggle Bolts: Federal Specification FF-B-588C, Type I, Class A, Style 1.

1.3 SUBMITTALS

A. Shop Drawings: Submit for approval the following:
1. Setting drawings and templates for location and installation of anchorage devices.
2. Copies of manufacturer's specifications, load tables, dimension diagrams and installation instructions for the devices.
3. Copies of ICBO, UL or FM Reports certifying load carrying capacities and installation requirements for the anchorage devices.

B. Samples: Submit for approval the following:
1. Representative samples of anchor bolts, toggle bolts and concrete inserts as may be requested by ENGINEER. Review will be for type and finish only. Compliance with all other requirements is exclusive responsibility of CONTRACTOR.

C. Shop Drawings: Submit for approval the following:
1. A copy of this specification section, with addendum updates included, and all referenced and applicable sections, with addendum updates included, with each paragraph check-marked to indicate specification compliance or marked to indicate requested deviations from specification requirements. Check marks (✓) shall denote full compliance with a paragraph as a whole. If deviations from the specifications are indicated, and therefore requested by the CONTRACTOR, each deviation shall be underlined and denoted by a number in the margin to the right of the identified paragraph, referenced to a detailed written explanation of the reasons for requesting the deviation. The ENGINEER shall be the final authority for determining acceptability of requested deviations. The CONTRACTOR shall furnish equipment and/or services as specified if an exception and/or deviation is rejected. The

remaining portions of the paragraph not underlined will signify compliance on the part of the CONTRACTOR with the specifications. Failure to include a copy of the marked-up specification sections, along with justification(s) for any requested deviations to the specification requirements, with the submittal shall be sufficient cause for rejection of the entire submittal with no further consideration.

2. The CONTRACTOR shall submit the preventive maintenance information package as part of the shop drawing submittal package to the ENGINEER for review and approval. **SHOP DRAWING SUBMITTAL PACKAGE WILL NOT BE APPROVED WITHOUT ACCEPTANCE OF PREVENTIVE MAINTENANCE INFORMATION.**

D. CONTRACTOR shall submit soft copies and hard copies per Specification 01332, Shop Drawing Procedures. Soft copies shall be in CD format and shall include all information provided in hard copy. Text shall be in electronic ASCII format. Drawings and figures shall be in AutoCAD ".dwg," or bitmap ".bmp," tiff ".tiff," jpeg ".jpg," gif ".gif," or pdf ".pdf" format.

PART 2 - PRODUCTS

2.1 DESIGN CRITERIA

A. When the size, length or load carrying capacity of an anchor bolt, toggle bolt, or concrete insert is not shown on the Drawings, provide the following:
   1. For anchor bolts (cast-in-place), provide the size, length and capacity required to carry the design load based on the values and requirements given in the 2009 Edition International Building Code.
   2. For concrete anchors (adhesive types) and concrete inserts, provide the size, length, type, and capacity required to carry the design load based on the values and requirements given in the ICBO Evaluation Report, or similar certifications by UL or FM, for the anchor to be used. Alternately, the capacity may be based on independent testing lab capacities for tension and shear strength using a minimum safety factor of four. Consideration of reduced capacity due to spacing and edge distance shall be made.

B. Determine Design Loads as follows:
   1. For equipment anchors, use the design load recommended by the equipment manufacturer and approved by ENGINEER.
   2. For pipe hangers and supports, use one half of the total weight of: Pipe, fittings, and water contained in pipe, plus the full weight of valves and accessories located between the hanger or support in question.
   3. Allowances for vibration are included in the safety factor specified above.
   4. Concrete anchors shall develop ultimate shear and pull-out loads of not less than the following values in 4,000 psi concrete:

Bolt Diameter (inches)	Min. Shear (pounds)	Min. Pull-Out Load (pounds)
1/2	5,000	7,600
5/8	8,000	12,000
3/4	11,500	17,000
7/8	15,700	20,400
1	20,500	28,400

2.2 APPLICATION

A. Where a concrete anchor is shown on the Drawings, install either an adhesive anchor or anchor bolt. In masonry where a concrete anchor is shown on the Drawings, only anchor bolts and adhesive anchors shall be used.

B. Anchor Bolts (Cast-In-Place):
   1. Shall be used where indicated and may be used where concrete anchors are indicated.
   2. Where an anchor bolt is indicated, only a cast-in-place anchor bolt shall be used, unless another anchor type is accepted by the ENGINEER.
   3. Provide anchor bolts as shown on the Drawings or as required to secure structural steel to concrete or masonry.

C. Adhesive Anchors:
   1. Use wherever concrete anchors are shown on the Drawings.
   2. Use where subject to vibration or where buried or submerged.
   3. Use for pipe supports.
   4. Use in concrete and masonry.
   5. Shall not be used in ceilings.
   6. Shall not be used for pipe hangers.

D. Concrete Inserts:
   1. Use only where indicated on the Drawings.
   2. Use for pipe hangers and supports for the pipe size and loading recommended by the insert manufacturer.

E. Toggle Bolts:
   1. Use for fastening brackets and other elements onto masonry units.

2.3 MATERIALS

A. Anchor Bolts:
   1. Provide stainless steel bolts complying with ASTM F593, AISI Type 316 headed or non-headed type with Nitronic 60 stainless steel nuts and locknuts, unless otherwise indicated.
   2. In buried or submerged locations, provide stainless steel bolts complete with washers complying with ASTM F593, AISI Type 316 and with Nitronic 60 stainless steel nuts and locknuts, unless otherwise shown on the Drawings. Other AISI types may be used subject to ENGINEER'S approval.
   3. For equipment, provide anchor bolts, which meet the equipment manufacturer's recommendations for size, material, and strength.
   4. Provide anchor bolts as shown on the Drawings or as required to secure structural steel to concrete or masonry.
   5. Locate and accurately set the anchor bolts using templates or other devices as required.
   6. Protect threads and shank from damage during installation of equipment and structural steel.
   7. Comply with manufacturer's required embedment length and necessary anchor bolt projection.

B. Adhesive Anchors:
   1. Provide stainless steel adhesive anchors complying with ASTM F593, AISI Type 316 with Nitronic 60 stainless steel nuts and locknuts.
   2. In buried or submerged locations, provide stainless steel adhesive anchors complying with ASTM F593, AISI Type 316 with Nitronic 60 stainless steel nuts and locknuts, unless otherwise shown on the Drawings.
   3. Anchors shall be of the size required for the concrete strength specified.
   4. Adhesive anchors shall consist of threaded rods or bolts anchored with an adhesive system into hardened concrete or grout-filled masonry. The adhesive system shall use a two-component adhesive mix and shall be injected with a static mixing nozzle following manufacturer's instructions. The embedment depth of the rod/bolt shall provide a minimum allowable bond strength that is equal to the allowable tensile capacity of the rod/bolt, unless noted otherwise on the Drawings.
   5. Product and Manufacturer: Provide one of the following:
      a. Epcon System Ceramic 6, as manufactured by ITW Ramset/Redhead.
      b. HIT HY-150 Injection Adhesive Anchor System, as manufactured by Hilti.
      c. Powerfast, as manufactured by Powers/Rawl.
      d. Or equal.

C. Sleeve Expansion Anchors for Installation in Concrete Masonry:
   1. Provide carbon steel anchors complete with nuts and washers, zinc plated, in accordance with ASTM B633, and meet the requirements of Federal Specification FF-S-325, Group II, Type 4, Class 1 for expansion anchors.

2. Product and Manufacturer: Provide anchors by one of the following:
   a. Sleeve Anchors, as manufactured by Hilti Fastening Systems, Incorporated.
   b. Dynabolt Sleeve, as manufactured by ITW Ramset/Red Head, Incorporated.
   c. Or equal.

D. Concrete Inserts:
   1. For piping, grating, floor plate and masonry lintels, provide malleable iron inserts. Comply with Federal Specification WW-H-171E (Type 18). Provide those recommended by the manufacturer for the required loading.
   2. Finish shall be black.
   3. Product and Manufacturer: Provide inserts by one of the following:
      a. Figure 282, as manufactured by ITT Grinnell.
      b. No. 380, as manufactured by Hohmann and Barnard, Incorporated.
      c. Or equal.

E. Toggle Bolts:
   1. Provide spring-wing toggle bolts, with two-piece wings.
   2. Provide carbon steel bolts with zinc coating in accordance with Federal Specification FF-S-325.
   3. Product and Manufacturer: Provide toggle bolts by one of the following:
      a. The Rawlplug Company, Incorporated.
      b. Haydon Bolts, Incorporated.
      c. Or equal.

F. Powder activated fasteners and other types of bolts and fasteners not specified herein shall not be used, unless approved by ENGINEER.

G. Expansion anchors will not be allowed.

PART 3 - EXECUTION

3.1 INSPECTION

A. CONTRACTOR shall examine areas and conditions under which anchor bolts, toggle bolts and concrete insert Work is to be installed, and notify ENGINEER, in writing, of conditions detrimental to proper and timely completion of Work. Do not proceed with Work until unsatisfactory conditions have been corrected in a manner acceptable to ENGINEER.

3.2 INSTALLATION

A. Assure that embedded items are protected from damage and are not filled in with concrete.

B. Use concrete inserts for pipe hangers and supports for the pipe size and loading recommended by the insert manufacturer.

C. Use toggle bolts for fastening brackets and other elements onto masonry units.

D. For the adhesive anchors and adhesive material, CONTRACTOR shall comply with the manufacturer's installation instructions on the hole diameter and depth required to fully develop the tensile strength of the adhesive anchor or reinforcing bar. CONTRACTOR shall properly clean out the hole utilizing a wire brush and compressed air to remove all loose material from the hole, prior to installing adhesive capsules or material.

3.3 CLEANING

A. After embedding concrete is placed, remove protection and clean bolts and inserts.

3.4 FIELD QUALITY CONTROL

A. CONTRACTOR shall employ a testing laboratory to perform field quality testing of installed anchors. Field engineer is to determine the level of testing which is required for the various types of adhesive anchors and anchor bolts. A minimum of 10% of the adhesive anchors and reinforcing bars are to be tested to 50% of the ultimate tensile capacity of the adhesive anchor or reinforcing bar.

B. If failure of any of the adhesive anchors or reinforcing bars occurs, CONTRACTOR will be required to pay for the costs involved in testing the remaining 90%.

C. CONTRACTOR shall correct improper workmanship, remove and replace, or correct as directed by the ENGINEER, all adhesive anchors or bars found unacceptable or deficient, at no additional cost to the OWNER.

D. CONTRACTOR shall pay for all corrections and subsequent tests required to confirm the integrity of the adhesive anchor or bar.

E. The independent testing and inspection agency shall complete a report on each area. The report should summarize the observations made by the inspector and be submitted to ENGINEER.

F. Provide access for the testing agency to places where Work is being produced so that required inspection and testing can be accomplished.

++ END OF SECTION ++

SECTION 05120

STRUCTURAL STEEL AND FRAMING

PART 1 - GENERAL

1.1 DESCRIPTION

A. Scope:
   1. CONTRACTOR shall provide all labor, materials, equipment, and incidentals required to furnish and install the structural steel, including surface preparation and shop priming, as shown and specified.
   2. Structural steel is that Work defined in AISC "Code of Standard Practice", Section 2, and as shown. The Work also includes:
      a. Providing openings in and attachments to structural steel to accommodate the Work under this and other Sections, and providing for the structural steel all items such as anchor bolts, studs and all items required for which provision is not specifically included under other Sections.

B. Coordination:
   1. Review installation procedures under other Sections and coordinate the Work that must be installed with or attached to the structural steel.

C. Related Sections:
   1. Section 03600, Grout.
   2. Section 05500, Metal Fabrications.
   3. Section 09900, Painting (Specification for Surface Preparation and Shop Priming is under Section 09900).
   4. Installation of anchor bolts for columns.
   5. Installation of embedded plates for steel framing.

1.2 QUALITY ASSURANCE

A. Standard Specifications and Details:
   1. CONTRACTOR shall conform to all applicable requirements of Sections Nos. 515 and 770 of the Uniform Standard Specifications for Public Works Construction by the Maricopa Association of Governments (MAG) as supplemented by the City of Chandler. Where there is a conflict between MAG Standard specifications, as supplemented by the City of Chandler, and this Specification, provisions of this Specification shall govern.

B. Reference Standards and Codes: Comply with applicable provisions and recommendations of the following, except as otherwise shown or specified:
   1. ASTM A36, Structural Steel.
   2. ASTM A53, Type E or S Grade B, Steel Pipe.
   3. ASTM A108, Cold Finished Carbon Steel Bars and Shafting.

4. ASTM A167, Type 316 Stainless Steel Sheet and Plates.
5. ASTM A276, Type 316 Stainless Steel Sections.
6. ASTM A307, Carbon Steel Externally and Internally Threaded Standard Fasteners.
7. ASTM A320, Conformance of Stainless Steel Fasteners and Fittings.
8. ASTM F3125/F3125M, High Strength Structural Bolts and Assemblies, Steel and Alloy Steel.
9. ASTM A490, Quenched and Tempered Alloy Steel Bolts for Structural Steel Joints.
10. ASTM A500, Cold-Formed Welded and Seamless Carbon Steel Structual Tubing in Rounds and Shapes.
11. ASTM A992, Structural Steel Shapes.
12. AWS D1.1, Structural Welding Code.
13. AREA, Manual of Railway Engineering.
14. AISC, Manual of Steel Construction.
15. AISC, Code of Standard Practice for Steel Buildings and Bridges.
16. AISC, Specifications for the Design, Fabrication, and Erection of Structural Steel for Buildings and including the Commentary and Supplements thereto as issued.
17. AISC, Specifications for Structural Joints using ASTM F3125, approved by the Research Council on Riveted and Bolted Structural Joints (RCRBSJ) of the Engineering Foundation.

C. Design of Members and Connections:
   1. All details shown are typical; similar details apply to similar conditions, unless otherwise shown or specified. Verify dimensions at the site without causing delay in the Work.
   2. CONTRACTOR shall examine conditions under which structural steel is to be provided and notify ENGINEER, in writing, of unsatisfactory conditions existing or whenever design of members and connections may not be clearly indicated. Do not proceed with the Work until unsatisfactory conditions or deficiencies have been corrected in a manner acceptable to ENGINEER.

D. Source Quality Control:
   1. Materials and fabrication procedures shall be subject to inspection and tests in the mill, shop, and field, conducted by a qualified inspection agency. Such inspections and tests will not relieve the CONTRACTOR of responsibility for providing materials and fabrication procedures in compliance with specified requirements.
   2. Fabrication shall be performed by a structural steel fabricating plant possessing a current certificate from AISC stating that the plant satisfies the requirements for certification for Category II of the AISC Quality Certification Program. The fabrication plant shall maintain this certification for the entire time fabrication for this project is being performed.

E. Qualifications for Welding Work:

1. Qualified welding processes and welding operators in accordance with AWS "Structural Welding Code" D1.1, Section 5, Qualification.
2. Provide certification that all welders, employed on or to be employed for the Work, have satisfactorily passed AWS qualification tests within the previous 12 months. CONTRACTOR shall ensure that all certifications are kept current.

1.3 SUBMITTALS

A. Shop Drawings:
   1. Submit for approval Shop Drawings including complete details and schedules for fabrication and shop assembly of members and details, schedules, procedures and diagrams showing the sequence of erection.
      a. Include details of cuts, connections, camber, holes, and other pertinent data. Indicate welds by standard AWS symbols, and show size, length, and type of each weld.
      b. Provide setting drawings, templates, and directions for the installation of anchor bolts and other anchorages.
   2. Submit for approval, copies of manufacturer's specifications and installation instructions for products listed below. Include laboratory test reports and other data as required to show compliance with the Contract Documents.
      a. Structural steel of each type, including certified copies of mill reports covering the chemical and physical properties.
      b. High-strength bolts of each type, including nuts and washers.
      c. Unfinished bolts and nuts.
      d. Shop primer and touch-up field primer paint.

B. Each Shop Drawing Submittal shall include a hard copy of the relevant Specification Section and shall be clearly marked to indicate whether the requirements for equipment and/or services in the Specification Section are met by writing "accept" or "deviate" next to each Paragraph. If clarifications are needed to any of the Paragraphs in the Specification Sections due to deviations, they shall be addressed next to the Paragraph as such and explained further with any additional information necessary. If any exceptions and/or deviations are proposed to any of the Specifications, they shall be clearly noted as such in the Submittal, and an explanation of any deviation and/or exception shall be provided. The CONTRACTOR shall furnish equipment and/or services as specified if an exception and/or deviation is rejected. Failure to include a copy of the marked-up specification sections, along with justification(s) for any requested deviations to the specification requirements, with the submittal shall be sufficient cause for rejection of the entire submittal with no further consideration.

1.4 PRODUCT DELIVERY, STORAGE, AND HANDLING

A. Deliver materials to the site at such intervals to ensure uninterrupted progress of the Work.

1. Deliver anchor bolts and anchorage devices, which are to be embedded in cast-in-place concrete or masonry, in ample time to not delay that Work.

B. Store materials to permit easy access for inspection and identification. Keep steel members off the ground, using pallets, platforms, or other supports. Protect steel members and packaged materials from corrosion and deterioration.
   1. Do not store materials on the structure in a manner that might cause distortion or damage to the members or the supporting structures. Repair or replace damaged materials or structures as directed.

PART 2 - PRODUCTS

2.1 MATERIALS

A. Rolled Steel Plates and Bars: ASTM A36, except where other type steel is shown.

B. W-Shapes: ASTM A992.

C. M-Shapes, S-Shapes, channels, and angles: ASTM A36.

D. Plates for W-Shape Members and Structural Tubes: ASTM A572.

E. Steel Pipe: ASTM A53, Grade B.

F. Steel Round: ASTM A500, Grade C.

G. Structural Rectangular (HSS): ASTM A500, GradeC.

H. Crane Rails: As shown and as noted in the AISC Manual.
   1. Provide rails with tight end joints suitable for crane service with joint bars matching the rail sections, joint bar bolts and nuts complying with ASTM F3125 with AREA alloy steel spring washers, and fixed or floating type rail clamps, as required to suit the conditions shown.

I. Anchor Rods/Bolts: ASTM F 1554, Grade 36, non-headed type, unless otherwise shown or specified.

J. Headed Stud Type Shear Connectors: ASTM A108, Grades 1010-1020, with dimensions complying with AISC Specifications, or equal.

K. Unfinished Threaded Fasteners: ASTM A307, Grade A, regular low-carbon steel bolts and nuts.
   1. Provide hexagonal heads and nuts for all connections.

L. High-Strength Threaded Fasteners: Heavy hexagonal structural bolts, heavy hexagon nuts, and hardened washers, as follows:

1. Quenched and tempered medium-carbon steel bolts, nuts and washers, complying with ASTM F3125; or
2. Quenched and tempered alloy steel bolts, nuts, and washers, complying with ASTM F3125.

M. Electrodes for Welding: E70XX complying with AWS D1.1, Design of New Buildings, Section 8, AWS D1.1.

N. Surface Preparation and Shop Priming: All structural steel shall be primed in the shop. Surface preparation and shop priming are included herein but are specified in Section 09900, Painting.

2.2 FABRICATION

A. Shop Fabrication and Assembly:
   1. General:
      a. Fabricate and assemble structural assemblies in the shop to the greatest extent possible. Fabricate items of structural steel in accordance with AISC, Manual of Steel Construction, and as shown on the Shop Drawings. Provide camber in structural members as shown.
      b. Properly mark and match-mark materials for field assembly. Fabricate for delivery sequence which will expedite erection and minimize field handling of materials.
      c. Where finishing is required, complete the assembly, including welding of units, before start of finishing operations. Provide finish surfaces of members exposed in the final structure free of markings, burrs, and other defects.

B. Connections:
   1. Shop Connections:
      a. Unless otherwise shown, shop connections may be welded or high strength bolted. Unless shown otherwise, all welds shall be 1/4-inch minimum.
      b. Wherever reaction values of a beam are not shown, the connections shall be designed to support the total uniform load capacity tabulated in the AISC tables for allowable loads on beams for the given shape, span, and steel specified for the beam in question.
      c. Shop welded connections shall be designed to eliminate or minimize eccentricity. The size, extent, location and type of all shop welds shall be clearly shown on the Shop Drawings by use of AWS Standard notations and symbols.
      d. End connection angles fastened to the webs of beams and girders and the thickness of the angles, size and extent of fasteners or shop welds shall conform to tables of "Framed" and "Heavy Framed" beam connections in the AISC Manual. All connections shall be two sided, unless otherwise shown.

2. Field Connections:
    a. All field connections, unless otherwise specified below or noted, shall be made with high strength bolts, and shall be bearing type connections.
    b. Field welding is permitted only where noted or approved by the ENGINEER.
3. High-Strength Bolted Construction:
    a. Install high-strength threaded fasteners in accordance with AISC "Specifications for Structural Joints using ASTM F3125 Bolts" (RCRBSJ).
    b. High strength bolt design shear values shall be as specified in the AISC Manual for bolts with threads in the shear plane.
    c. The minimum size of bolts shall be 3/4-inch diameter, unless otherwise noted.
4. Welded Construction: Comply with AWS Code for procedures, appearance and quality of welds, and methods used in correcting welding work.
    a. Assemble and weld built-up sections by methods which will produce true alignment of axes without warp.

C. Columns: Column shafts shall have "finished" bearing surfaces at the base and at all splice lines.

D. Structural Tubing: Structural tubing shall be properly sealed to protect the internal surfaces.

E. Holes and Appurtenances for Other Work:
1. Provide holes required for securing other Work to structural steel framing and for the passage of other Work through steel framing members, as shown on the Shop Drawings. If large block-outs are required and approved, the webs shall be reinforced to develop specified shears. Provide threaded nuts welded to framing, and other specialty items as shown, to receive other Work.
2. Cut, drill, or punch holes perpendicular to metal surfaces. Do not flame cut holes or enlarge holes by burning. Drill holes in bearing plates.
3. Coordinate as specified in Paragraph 1.1.B.

PART 3 - EXECUTION

3.1 ERECTION

A. General: Comply with the AISC Specifications and Code of Standard Practice, and as herein specified.

B. Surveys: Provide services of a registered surveyor to check lines and elevations of concrete and masonry bearing surfaces, and locations of anchor bolts and similar devices before steel erection proceeds. Discrepancies shall be reported immediately to the ENGINEER. Do not proceed with erection until corrections

have been made, or until compensating adjustments to the structural steel work have been agreed upon with the ENGINEER.

C. Temporary Shoring and Bracing: Provide temporary shoring and bracing members with connections of sufficient strength to bear imposed loads. Remove temporary members and connections when permanent members are in place and final connections are made. Provide temporary guy lines to achieve proper alignment of the structures as erection proceeds.

D. Temporary Planking: Provide temporary planking and working platforms as necessary to effectively complete the Work. CONTRACTOR shall provide sufficient planking to meet OSHA requirement of a tightly planked substantial floor within two stories or 30 feet, whichever is less, below each tier of steel beams on which Work is performed.

E. Anchor Bolts: Furnish anchor bolts and other connectors required for securing structural steel to foundations and other in-place Work.
   1. Furnish templates and other devices as necessary for presetting bolts and other anchors to accurate locations.
   2. Refer to Division 3, Concrete, for anchor bolt installation requirements in concrete.

F. Setting Bases and Bearing Plates: Clean concrete and masonry bearing surfaces of bond-reducing materials and roughen to improve bond to surfaces. Clean the bottom surface of base and bearing plates.
   1. Set loose and attached base plates and bearing plates for structural members on steel wedges or other adjusting devices.
   2. Tighten the anchor bolts after the supported members have been positioned and plumbed. Do not remove wedges or shims, but if protruding, cut off flush with the edge of the base or bearing plate prior to packing with grout.
   3. Place grout between bearing surfaces and bases or plates as specified in Section 03600, Grout. Finish exposed surfaces, protect installed materials, and allow to cure in strict compliance with the manufacturer's instructions, or as otherwise required.
   4. Leveling plates and wood wedges will not be permitted.

G. Field Assembly: Set structural frames accurately to the lines and elevations indicated. Align and adjust the various members forming a part of a complete frame or structure before permanently fastening. Clean bearing surfaces and other surfaces which will be in permanent contact before assembly. Perform necessary adjustments to compensate for discrepancies in elevations and alignment.
   1. Level and plumb individual members of the structure within tolerances as specified in AISC Manual. For members requiring accurate alignment, clip angles, lintels and other members, these members shall be provided with slotted holes for horizontal adjustment at least 3/8-inch in each direction, or more when required.

2. Splice members only where shown or specified.

H. Erection Bolts: On exposed welded construction, remove erection bolts, fill holes with plug welds and grind smooth at exposed surfaces.

I. Comply with AISC Manual for bearing, adequacy of temporary connections, alignment, and the removal of paint on surfaces adjacent to field welds.
   1. Do not enlarge unfair holes in members by burning or by the use of drift pins, except in secondary bracing members. Ream holes that must be enlarged to admit bolts.

J. Gas Cutting: Do not use gas cutting torches in the field for correcting fabrication errors in the structural framing. Cutting will be permitted only on secondary members which are not under stress, as acceptable to the ENGINEER. Finish gas-cut sections equal to a sheared appearance when permitted.

K. Touch-Up Painting:
   1. Immediately after erection, clean field welds, bolted connections, and all damaged and abraded areas of the shop paint. Apply paint to exposed areas with the same material as used for shop painting. Apply by brush or spray to provide a minimum dry film thickness of 2.0 mils.

++ END OF SECTION ++

SECTION 05500

METAL FABRICATIONS

PART 1 - GENERAL

1.1 SUMMARY

A. All specialty metal items required to complete the Work in accordance with the intent of the Drawings and Specifications shall be furnished and installed, regardless of whether or not specifically shown or described. Such items include loose or embedded items of structural shapes, plates and bars, welded plate inserts, fabrications, and similar items. Bolts, expansion shields, and other fastening devices, which may or may not be provided with the indicated or specified items, shall also be furnished and installed as required for attachment and support.

1.2 SECTION INCLUDES

A. Miscellaneous fabrications include, but are not limited to the following:
   1. Pipe supports, hangers, and brackets.
   2. Access hatches.
   3. Anchor bolts.
   4. Stainless steel rods, nuts, bolts, and washers.
   5. Fasteners for aluminum.
   6. Floor drains.
   7. Anodizing.
   8. Fasteners.
   9. Pipe bollards.
   10. Corrosion protection.
   11. Stair nosings.
   12. Miscellaneous steel shapes.
   13. Metal strut framing components.
   14. Chemical anchors, expansion anchors, and miscellaneous fasteners.

1.3 REFERENCES

A. AAMA 611, Voluntary Specification for Anodized Architectural Aluminum; American Architectural Manufacturers Association.

B. ANSI A14.3, American National Standard for Ladders -- Fixed -- Safety Requirements.

C. ASTM A36/A36M, Standard Specification for Carbon Structural Steel.

D. ASTM A53/A53M, Standard Specification for Pipe, Steel, Black and Hot-Dipped, Zinc-Coated, Welded and Seamless.

E. ASTM A108, Standard Specification for Steel Bars, Carbon, Cold Finished, Standard Quality.

F. ASTM A123/A123M, Standard Specification for Zinc (Hot-Dip Galvanized) Coatings on Iron and Steel Products.

G. ASTM A153/A153M, Standard Specification for Zinc Coating (Hot-Dip) on Iron and Steel Hardware.

H. ASTM A276, Standard Specification for Stainless and Heat-Resisting Steel bars and Shapes.

I. ASTM A283/A283M, Standard Specification for Low and Intermediate Tensile Strength Carbon Steel Plates.

J. ASTM A307, Standard Specification for Carbon Steel Bolts and Studs, 60,000 PSI Tensile Strength.

K. ASTM A500, Standard Specification for Cold-Formed Welded and Seamless Carbon Steel Structural Tubing in Rounds and Shapes.

L. ASTM A570/A570M, Standard Specification for Steel, Sheet and Strip, Carbon, Hot-Rolled.

M. ASTM A575, Standard Specification for Steel Bars, Carbon, Merchant Quality, M-Grades; 1996.

N. ASTM A576, Standard Specification for Steel Bars, Carbon, Hot-Wrought, Special Quality.

O. ASTM A635/A635M, Standard Specification for Steel, Sheet and Strip, Heavy-Thickness Coils, Carbon, Hot-Rolled.

P. ASTM A653/A653M, Standard Specification for Steel Sheet, Zinc-Coated (Galvanized) or Zinc-Iron Alloy-Coated (Galvannealed) by the Hot-Dip Proces.

Q. ASTM A666, Standard Specification for Annealed or Cold-Worked Austenitic Stainless Steel Sheet, Strip, Plate, and Flat Bar.

R. ASTM A992, Standard Specification for Structural Steel Shapes.

S. ASTM B117, Standard Practice for Operating Salt Spray (Fog) Apparatus.

T. ASTM B210, Standard Specification for Aluminum and Aluminum-Alloy Drawn Seamless Tubes.

U. ASTM B210M, Standard Specification for Aluminum and Aluminum-Alloy Drawn Seamless Tubes (Metric).

V. ASTM B211, Standard Specification for Aluminum and Aluminum-Alloy Bar, Rod, and Wire.

W. ASTM B211M, Standard Specification for Aluminum and Aluminum-Alloy Bar, Rod, and Wire (Metric).

X. ASTM B221, Standard Specification for Aluminum and Aluminum-Alloy Extruded Bars, Rods, Wire, Profiles, and Tubes.
   1. ASTM B221M, Standard Specification for Aluminum and Aluminum-Alloy Extruded Bars, Rods, Wire, Profiles, and Tubes (Metric).

Y. ASTM B308, Standard Specification for Aluminum-Alloy 6061-T6 Standard Structural Shapes.

Z. ASTM C1107, Standard Specification for Packaged, Dry, Hydraulic-Cement Grout (Non-shrink).

AA. ASTM E488, Standard Test Method for Strength of Anchors in Masonry and Concrete.

BB. AWS A2.4, Standard Symbols for Welding, Brazing, and Nondestructive Examination; American Welding Society.

CC. AWS D1.1/D1.1M, Structural Welding Code - Steel; American Welding Society.

DD. SSPC-Paint 15, Steel Joist Shop Primer; Society for Protective Coatings.

1.4 SUBMITTALS

A. Descriptive submittals shall be made in accordance with the Data Reference Symbols defined in Section 01300, Submittals.
   1. Shop Drawings:
      a. Pipe Supports, Hangers, and Brackets; Access Hatches; Anchor Bolts, Stainless Steel Rods, Nuts, Bolts, and Washers; Fasteners for Aluminum; Floor Drains; Anodizing; Ladders; and Pipe Bollards:
         1) Letters of Certification of Compliance on materials, equipment, etc.
         2) Final Certified Drawings showing outline dimensions, foundation layout or mounting information, and other pertinent dimensions.
         3) Field erection instructions, assembly drawings and/or diagrams, detailed reference drawing lists, lists of erection details, and list of spare parts supplied with equipment.

4) Shop Detail Drawings showing individual sub- assemblies and fabricated pieces with material specifications and other applicable data.
5) General bulletins and catalog cuts describing complete apparatus, including operating principles and fundamentals.
6) Materials of construction of all components.
7) Material gradation, design mix, job mix formula, and/or material analysis.

b. Shop Drawings shall be provided for all metal fabrications and shall indicate all shop and erection details, including cuts, copes, connection, holes, threaded fasteners, rivets, and welds.
1) All welds, both shop and field, shall be indicated by AWS Welding Symbols.
2) Show all types of paints.
3) Submit certified copies of the qualifications records of each welder prepared within six months of time of Contract award.

c. The CONTRACTOR shall submit Shop Drawings for all proposed pipe supports, hangers, and brackets.

d. The CONTRACTOR shall submit design calculations for ladder, safety cage, and ladder anchorage. Design calculations shall be signed by a civil or structural engineer registered in the state of Arizona.

B. Each Shop Drawing Submittal shall include a hard copy of the relevant Specification Section and shall be clearly marked to indicate whether the requirements for equipment and/or services in the Specification Section are met by writing "accept" or "deviate" next to each Paragraph. If clarifications are needed to any of the Paragraphs in the Specification Sections due to deviations, they shall be addressed next to the Paragraph as such and explained further with any additional information necessary. If any exceptions and/or deviations are proposed to any of the Specifications, they shall be clearly noted as such in the Submittal, and an explanation of any deviation and/or exception shall be provided. The CONTRACTOR shall furnish equipment and/or services as specified if an exception and/or deviation is rejected. Failure to include a copy of the marked-up specification sections, along with justification(s) for any requested deviations to the specification requirements, with the submittal shall be sufficient cause for rejection of the entire submittal with no further consideration.

PART 2 - PRODUCTS

2.1 MATERIALS

A. Steel Plates, Shapes, and Bars: ASTM A36, except where other type of steel is shown on the Drawings. W-shapes shall be be ASTM A 992.

B. Aluminum:

1. Alloy and Temper: Provide alloy and temper as shown on the Drawings or specified, or as otherwise recommended by the aluminum producer or finisher.

2. Extruded Shapes and Tubes: ASTM B221.

3. Plate and Sheet: ASTM B209.

4. Bars, Rods, and Wire: ASTM B211.

C. Stainless Steel Plates, Sheets, and Bars: ASTM A240 or A276, Type 304L or Type 316 stainless steel.

1. Submerged or Intermittently Submerged: Type 316 stainless steel.

2. Non-Submerged: Type 304L stainless steel.

D. Stainless Steel Fasteners and Fittings: ASTM A320.

2.2 PIPE SUPPORTS, HANGERS, AND BRACKETS

A. Process Piping:
   1. All process piping shall be supported as detailed on the Drawings and specified herein. Process piping includes, but is not limited to, the following:
      a. Ductile iron pipe.
      b. Copper pipe.
      c. PVC pipe.
      d. Fiberglass reinforced plastic (FRP) pipe.
      e. Steel Pipe.
      f. Stainless steel pipe.
   2. All process pipe supports, hangers, and brackets shall be as manufactured by B-Line Systems, Grinnell, or Unistrut, as detailed on the Drawings. Supports for stainless steel piping shall be Type 316 stainless steel.
   3. All appurtenances required for proper installation of the pipe supports, brackets, and hangers shall be supplied by the manufacturer.
   4. Anchor bolts for pipe supports, hangers, and brackets shall be of the sizes as recommended by the manufacturers of the pipe supports, hangers, and brackets. Anchor bolt type and materials shall be as specified under Section 2.3 of this Specification.

2.3 ACCESS HATCHES

A. Access hatches shall be manufactured by Nystrom Building Products, Syracuse Castings, Halliday, Inc., or approved equal.

B. Each hatch shall be designed to combine covering of the opening per OSHA Standard 1910.23 and controlled confine space entry with a safety grate per OSHA Standard 1910.146.

C. Access hatches shall be sized as shown on the Drawings or as specified in related Sections. All hatches shall be aluminum with anodized finish, use 316 stainless steel hardware, and be traffic rated conforming to AASHTO H-20 or pedestrian traffic rated for a load of 300 lbs per square foot, as indicated on the Plans or as specified in related Sections. The hatches shall be supplied with safety chains, stainless steel compression springs for lift assistance, and a recessed, tamper resistant padlock assembly.

D. Access hatches shall come with a minimum five year warranty on all parts and workmanship.

E. Safety grating shall be provided at all hatches.

F. The safety grate shall be made of 6061-T6 aluminum with a minimum ultimate strength of 38,000 psi and a minimum yield strength of 35,000 psi as per ASTM B221. Grate design shall use safety factors as defined in the "Specifications for Aluminum Structures" by the Aluminum Association, Inc., 5th edition, for "Bridge Type Structures".

G. Grating shall be designed to withstand a minimum live load of 300 lbs per square foot. Deflection shall not exceed $1/150^{th}$ of the span.

H. Grate openings shall be 5-inches by 5-inches, which will allow for visual inspection, limited maintenance, and float adjustments while the safety grate fall through protection is left in place.

I. Design must assure that the fall through protection is in place before the doors can be closed, thereby protecting the next operator.

J. Each grate shall be provided with a permanent hinging system, which will lock the grate in the 90 degree position once opened. Grate shall be coated with an OSHA type safety orange color and shall receive a 2-coat powder coat system, applied by electrostatic spray process. The base coat is a thermosetting epoxy powder coat finish with a minimum thickness of 2 - 4 mils. The top coat is a mar-resistant, TGIC polyester powder coating with a minimum thickness of 2 - 4 mils. Each coat shall be baked at 350° F - 375° F until cured. Each grate shall have an opening arm with a red vinyl grip handle. The opening arm shall also be equipped with a controlled confined space entry lock (lock provided by others).

K. Welding shall be in accordance with ANSI/AWS D1.2-90 Structural Welding Code for Aluminum.

L. Install per manufacturer's recommendation.

M. The manufacturer shall provide a representative at the time of installation for approval, as well as a minimum of four hours of training of staff.

N. See Specification 09920, Coating Systems, on aluminum coating in contact with grout or concrete.

2.4 ANCHOR BOLTS

A. Cast-In-Place Bolt-Type Anchors:
   1. Cast-in-place anchor bolts, nuts, and washers shall be ANSI Type 316 stainless steel, which meets the requirements of ASTM F593 and ASTM A666.
   2. Cast-in-place anchor bolts shall have a bent shank or flat plate configuration.

B. Adhesive (Epoxy) Anchors:
   1. Adhesive anchors shall consist of all-thread anchor rod, nut, washer, and adhesive capsule. Anchor rods shall be manufactured from ASTM A666 AISI Type 316 stainless steel, which meets the requirements of ASTM F593.
   2. Anchors shall be installed per manufacturer's recommendations.

2.5 STAINLESS STEEL RODS, NUTS, BOLTS, AND WASHERS

A. Stainless steel rods, nuts, bolts, and washers shall be ASTM A666, Type 316. Only non-gall lubricants shall be used on stainless steel rods, nuts, and bolts.

2.6 FASTENERS FOR ALUMINUM

A. Unless otherwise specified, all nuts, bolts, screws, washers, and other fastener material for aluminum handrails, stairs, gratings, and other aluminum fabrications shall be Type 316 stainless steel.

2.7 FLOOR DRAINS

A. Floor drains shall be ductile iron with ductile iron grate sized as indicated on the Drawings. The drain shall be as manufactured by Neenah Foundry Company, Model R-4937-B, or approved equal.

2.8 ANODIZING

A. Anodizing for aluminum, unless otherwise indicated, shall be 200RI finish.

2.9 FASTENERS

A. Unless otherwise specified or required, all fasteners provided for this Project shall be at a minimum Grade 5, ASTM A449, Type 1, SAE J429. Grade marking shall appear on all bolts and nuts.

2.10 PIPE BOLLARDS

A. Steel pipe with stud anchors, concrete filled, flush concrete cap as detailed; 6-inch diameter.

2.11 CORROSION PROTECTION

A. Corrosion Protection: Prepare and coat all concealed surfaces of aluminum that will come into contact with grout, concrete, masonry, wood, or dissimilar metals with the following:
   1. Surface must be clean, dry, and free of oil, grease, and other contaminants. Surface preparation with SSPC-SP7 brush-off abrasive blast cleaning. Apply two coats of Tnemec Series 20 Pota-Pox or approved equal; each coat shall be 3 - 5 mils. Coating must be NSF 61 approved.

2.12 STAIR NOSINGS

A. Extruded aluminum units with abrasive filler consisting of aluminum oxide or silicon carbide grits, or a combination of both, in an epoxy-resin binder with integral, concealed anchors. Furnish in single piece of lengths as required to terminate nosings 6-inches from end of stair treads.
   1. Product and Manufacturer: Supergrit Type 231BF, CG-1 Concrete Gray, Wooster Products, Inc.: www.wooster-products.com or approved equal.

2.13 MISCELLANEOUS STEEL SHAPES

A. Materials - Steel:
   1. Steel Sections: Channels, angles, M-Shapes, and S-Shapes: ASTM A36/A36M. W-Shapes: ASTM A992.
   2. Steel Tubing: ASTM A500, Grade C, cold-formed structural tubing.
   3. Bars: ASTM A36/A36M.
   4. Plates: ASTM A283.
   5. Pipe: ASTM A53, standard weight, black finish.
   6. Stud Anchors: ASTM A108, Grade 1015.
   7. Bolts, Nuts, and Washers: ASTM A325, galvanized to ASTM A153/A153M where connecting galvanized components.
   8. Welding Materials: AWS D1.1; type required for materials being welded.
   9. Shop and Touch-Up Primer: SSPC-Paint 15, complying with VOC limitations of authorities having jurisdiction.
   10. Touch-Up Primer for Galvanized Surfaces: SSPC-Paint 20, Type I - Inorganic, complying with VOC limitations of authorities having jurisdiction.

B. Finishes - Steel:
   1. Prime paint all steel items.

a. Exceptions: Do not prime surfaces in direct contact with concrete, where field welding is required, and items to be covered with sprayed fireproofing.

2. Prepare surfaces to be primed in accordance with SSPC-SP2.
3. Clean surfaces of rust, scale, grease, and foreign matter prior to finishing.
4. Prime Painting: One coat.
   a. Provide shop primer compatible with specified field-applied topcoats.
5. Galvanizing of Structural Steel Members: Galvanize after fabrication to ASTM A123/A123M requirements. Provide minimum 2.0 oz/sq ft galvanized coating.
6. Galvanizing of Non-Structural Items: Galvanize after fabrication to ASTM A123/A123M requirements.
7. Stainless Steel Bars and Shapes: ASTM A276, Type 304 finish.
8. Stainless Steel Plate: ASTM A276, Type 304 finish.
9. Stainless Steel Sheet: ASTM A666, Type 304, soft temper, 0.015-inch thick; smooth No. 4 finish.

2.14 METAL STRUT FRAMING MATERIALS

A. Metal Strut Framing System: Structural support system with capability to sustain, without failure, imposed loads consisting of channels, angles, tubes, and accessories as recommended by manufacturer for application indicated.
   1. Channels: Cold formed from structural grade steel conforming to ASTM A570, Grade 33, or ASTM A653, Grade 33.
   2. Fittings: Fabricated from steel conforming to ASTM A36, ASTM A575, ASTM A576, or ASTM A635.
   3. Accessories: Manufacturer's standard nuts, bolts, washers, clamps, hangers, plates, fittings, brackets, threaded rod, inserts, splices, and other fabrications as recommended by manufacturer.

B. Finish components in accordance with one of the following:
   1. Rust-inhibiting acrylic enamel paint, thoroughly baked; conforming to ASTM B117.
   2. Zinc-coated by the hot-dipped process prior to roll-forming, G90 conforming to ASTM A653.
   3. Zinc-coated after all manufacturing, conforming to ASTM A123 or ASTM A153.

C. Product and Manufacturer: Unistrut Metal Framing, Unistrut Corporation, Division of Tyco International, Ltd.: www.unistrut.com or equal.

2.15 ADHESIVE AND EXPANSION ANCHORS

A. Anchors with capability to sustain, without failure, load imposed within factors of safety indicated, as determined by testing per ASTM E488, conducted by a qualified independent testing agency; designed for use in concrete and masonry.

1. Expansion Anchors: Stud type stainless steel expansion anchor with a single piece wedge.
2. Location: Provide only at locations specifically indicated to receive expansion anchors.
3. Threaded Inserts: Internally threaded, flush mounted, expansion type stainless steel.
4. Adhesive Anchors: Two-component injectable adhesive type.

2.16 GROUT AND ANCHORING CEMENT

A. Non-shrink, Non-metallic Grout: Premixed, factory-packaged, non-staining, non-corrosive, nongaseous grout complying with ASTM C1107. Provide grout specifically recommended by manufacturer for interior and exterior applications

2.17 FABRICATION

A. Fit and shop assemble items in largest practical sections for delivery to site.

B. Fabricate items with joints tightly fitted and secured.

C. Continuously seal joined members by continuous welds.

D. Grind exposed joints flush and smooth with adjacent finish surface. Make exposed joints butt tight, flush, and hairline. Ease exposed edges to small uniform radius.

E. Exposed Mechanical Fastenings: Flush countersunk screws or bolts; unobtrusively located; consistent with design of component, except where specifically noted otherwise.

F. Supply components required for anchorage of fabrications. Fabricate anchors and related components of same material and finish as fabrication, except where specifically noted otherwise.

2.18 FABRICATION TOLERANCES

A. Squareness: 1/8-inch maximum difference in diagonal measurements.

B. Maximum Offset Between Faces: 1/16-inch.

C. Maximum Misalignment of Adjacent Members: 1/16-inch.

D. Maximum Bow: 1/8-inch in 48-inches.

E. Maximum Deviation From Plane: 1/16-inch in 48-inches.

PART 3 - EXECUTION

3.1 INSTALLATION

A. Install items plumb and level, accurately fitted, free from distortion or defects.

B. All bolting holes provided in equipment, valves, gates, pipe supports and hangers, handrails, ladders, and other items which require mounting shall be used as specified and intended.

C. Allow for erection loads and for sufficient temporary bracing to maintain true alignment until completion of erection and installation of permanent attachments.

D. Field weld components indicated on Drawings.

E. Perform field welding in accordance with AWS D1.1.

F. The ENGINEER'S approval prior to site cutting or making adjustments not scheduled.

3.2 INSTALLING PIPE BOLLARDS

A. Anchor bollards in concrete with pipe sleeves preset and anchored into concrete. After bollards have been inserted into sleeves, fill annular space between bollard and sleeve solidly with non-shrink, non-metallic grout, mixed and placed to comply with grout manufacturer's directions.

B. Fill bollards solidly with concrete and strike flush with top of bollard, unless indicated otherwise.

++ END OF SECTION ++

SECTION 05502

CANTILEVERED SLIDING GATE

PART 1 - GENERAL

1.1 SUMMARY

A. Provide metal work shown on the Details, as specified herein, and as needed for a complete and proper installation. Section includes sliding gate for the Treatment Plant, as shown on Drawings and as specified herein.

B. Related Work:
   1. Documents affecting Work of this Section include, but are not necessarily limited to, Sections in Divisions of these Specifications.

1.2 GENERAL LIST OF WORK

A. Furnishing and Installing: The Work of this Section and related work described in other Sections includes, but is not limited to, the following:
   1. Powder-coated or painted metal surfaces, bracing, mounting plates, and flanges as directed by ENGINEER.
   2. Finishing of all unfinished work unless specifically indicated otherwise.

1.3 SUBMITTALS

A. Materials list of items proposed to be provided under this Section.

B. Shop Drawings, stamped by a registered Arizona Structural Engineer, in sufficient detail to show fabrication, bracing, perforation pattern, installation, welds, anchorage, and interface of the Work of this Section with the work of adjacent trades.

C. Brochures of manufacturer of paint proposed for use describing applicability of material for use intended, color selection, and manufacturer's recommended methods of application.

D. Accompanying the above submittal, submit metal sample of perforated metal seat showing quality, texture, and color of the proposed finish.

E. Each Shop Drawing Submittal shall include a hard copy of the relevant Specification Section and shall be clearly marked to indicate whether the requirements for equipment and/or services in the Specification Section are met by writing "accept" or "deviate" next to each Paragraph. If clarifications are needed to any of the Paragraphs in the Specification Sections due to deviations, they shall be addressed

next to the Paragraph as such and explained further with any additional information necessary. If any exceptions and/or deviations are proposed to any of the Specifications, they shall be clearly noted as such in the Submittal, and an explanation of any deviation and/or exception shall be provided. The CONTRACTOR shall furnish equipment and/or services as specified if an exception and/or deviation is rejected. Failure to include a copy of the marked-up specification sections, along with justification(s) for any requested deviations to the specification requirements, with the submittal shall be sufficient cause for rejection of the entire submittal with no further consideration.

1.4 QUALITY ASSURANCE

A. Use adequate numbers of skilled workmen who are thoroughly trained and experienced in the necessary crafts and who are completely familiar with the specified requirements and the methods needed for proper performance of the Work of this Section.

B. Perform shop and/or field welding required in connection with the Work of this Section in strict accordance with pertinent recommendations of the American Welding Society.

PART 2 - PRODUCTS

2.1 MATERIALS

A. In fabricating items, which will be exposed to view, limit materials to those which are free from surface blemishes, pitting, rolled trade names, and roughness.

B. Comply with following standards, as pertinent.
   1. Steel Plates, Shapes, and Bars: ASTM A36.
   2. Steel Plates to be Bent or Cold-Formed: ASTM A283, Grade C.
   3. Steel Tubing (hot-formed, welded, or seamless): ASTM A501.
   4. Steel Bars and Bar-Size Shapes: ASTM A306, Grade 65, or ASTM A36.
   5. Cold-Finished Steel Bars: ASTM A108.
   6. Cold-Rolled Carbon Steel Sheets: ASTM A336.
   7. Galvanized Carbon Steel Sheets: ASTM A526, with G90 zinc coating in accordance with ASTM A525.
   8. Concrete Inserts:
      a. Provide required bolts, shims, and washers, hot-dip galvanized in accordance with ASTM A153.
   9. Galvanizing Assembled Steel Products: ASTM A386.
   10. Perforated Metal: Straight line 1/4-inch holes at 2-inch spacing or as indicated. Minimum 12 gauge steel or as indicated.

2.2 FASTENERS

A. General:
   1. Provide fasteners of type, grade, and class required for the particular use.

B. Comply with following standards as pertinent.
   1. Bolts and Nuts: Provide hexagon-head regular type complying with ASTM A307, Grade A.
   2. Lag Bolts: Provide square-head type complying with Fed Spec FF-B-561.
   3. Machine Screws: Provide cadmium plated steel type complying with Fed Spec FF-S-111.
   4. Washers:
      a. Plain Washers: Comply with Fed Spec FF-W-92, round, carbon steel.
      b. Lock Washers: Comply with Fed Spec FF-W-84, helical spring type carbon steel.
   5. Toggle Bolts: Provide type, class, and style needed, but complying with Fed Spec FF-B-588.
   6. Anchorage Devices: Provide expansion shield complying with Fed Spec FF-S-325.

2.3 OTHER MATERIALS

A. Provide other materials not specifically described, but required for a complete and proper installation, as selected by the CONTRACTOR, subject to the approval of the ENGINEER.

2.4 PAINT

A. Paint shall be applied per manufacturer's instructions, including iron phosphate coating for application to steel prior to application. Provide Tiger-Drylac Series 49 powder coating, or approved equal. Paint shall be applied evenly and be free of runs, sags, skips, or other defects. Work shall not be installed until painted surface has cured.

B. All materials shall comply with all applicable health, safety, and environmental regulations.

C. Paint shall have a double powder coat paint process, provide for long term corrosion protection, and be formulated for high-build coats of steel. Finish shall be warranted for a minimum of three years.

D. Color shall match Project metal finishes or as directed by ENGINEER.

2.5 FABRICATION:

A. Except as otherwise shown on the Drawings or the approved Shop Drawings, use materials of size, thickness and type required to produce reasonable strength and durability in the Work of this Section.

B. Fabricate with accurate angles and surfaces which are true to the required lines and levels, grinding exposed welds smooth and flush, grinding all edges full radius, forming exposed connections with hairline joints, and using concealed fasteners wherever possible.

C. Prior to shop painting or priming, properly clean metal surfaces as required for the applied finish and for the proposed use of the item.

D. On surfaces inaccessible after assembly or erection, touch-up as recommended by the manufacturer to achieve similar finish, protection, and color to rest of metal surfaces.

PART 3 - EXECUTION

3.1 SURFACE CONDITIONS

A. Examine the areas and conditions under which Work of this Section will be performed. Correct conditions detrimental to timely and proper completion of the Work. Do not proceed until unsatisfactory conditions are corrected.

B. Shop fabricate items as completely as possible.

C. Prepare surfaces for powder coating or paint as follows:
   1. Apply thick-coat iron phosphate coating or pain undercoat to metal surfaces to promote adherence of powder coat or paint.
   2. Apply powder coating or paint per manufacturer's instructions, minimum two coats.

3.2 SURFACE PREPARATION

A. General: All surfaces shall be cleaned of foreign matter, smoothed, and minor defects removed. Grind exposed welds smooth and grind edges full radius.

3.3 COORDINATION

A. Coordinate as required with other trades to assure proper and adequate provision in the work of those trades for interface with the Work of this Section.

3.4 INSTALLATION

A. General:

1. Set Work accurately into position, plumb, level, true, and free from rack.
2. Anchor firmly into position.
3. Where field welding is required, comply with AWS recommended procedures of manual-shielded metal-arc welding for appearance and quality of weld and for methods to be used in correcting welding work.
4. Touch-up all chips and blemishes to paint as needed per manufacturer's instructions.

B. Clean all exposed metal work with cleaner recommended by manufacturer of materials and rinse with clean water. Do not use harsh chemicals or abrasives. Surfaces with stains which cannot be removed by cleaning shall be refinished or replaced to the satisfaction of the ENGINEER.

++ END OF SECTION ++

SECTION 05510

METAL STAIRS

PART 1 - GENERAL

1.1 RELATED DOCUMENTS

A. Drawings and general provisions of the Contract, including General and Supplementary Conditions and Division 1, General Requirements, Specification Sections, apply to this Section.

1.2 SUMMARY

A. This Section includes the following:
   1. Galvanized, steel-framed stairs.
   2. Galvanized, steel pipe handrails and railing systems attached to metal stairs.
   3. Galvanized, steel pipe handrails attached to walls adjacent to metal stairs.

1.3 REFERENCES

A. ASTM A36/A36M, Standard Specification for Carbon Structural Steel

B. ASTM A53/A53M, Standard Specification for Pipe, Steel, Black and Hot-Dipped, Zinc-Coated, Welded and Seamless.

C. ASTM A123/A123M, Standard Specification for Zinc (Hot-Dip Galvanized) Coatings on Iron and Steel Products.

D. ASTM A153/A153M, Standard Specification for Zinc Coating (Hot-Dip) on Iron and Steel Hardware.

E. ASTM A283/A283M, Standard Specification for Low and Intermediate Tensile Strength Carbon Steel Plates.

F. ASTM A325, Standard Specification for Structural Bolts, Steel, Heat Treated, 120/105 ksi Minimum Tensile Strength.

G. ASTM A325M, Standard Specification for Structural Bolts, Steel, Heat Treated 830 MPa Tensile Strength (Metric).

H. ASTM A500, Standard Specification for Cold-Formed Welded and Seamless Carbon Steel Structural Tubing in Rounds and Shapes.

I. ASTM A653/A653M, Standard Specification for Steel Sheet, Zinc-Coated (Galvanized) or Zinc-Iron Alloy-Coated (Galvannealed) by the Hot-Dip Process.

J. ASTM A1008/A1008M, Standard Specification for Steel, Sheet, Cold-Rolled, Carbon, Structural, High-Strength Low-Alloy and High-Strength Low-Alloy with Improved Formability.

K. ASTM E985, Standard Specification for Permanent Metal Railing Systems and Rails for Buildings.

L. NAAMM AMP 510, Metal Stairs Manual; The National Association of Architectural Metal Manufacturers; 1992, Fifth Edition.

M. NAAMM MBG 531, Metal Bar Grating Manual; The National Association of Architectural Metal Manufacturers.

1.4 PERFORMANCE REQUIREMENTS

A. Structural Performance: Engineer, fabricate, and install metal stair systems to withstand the following structural loads without exceeding the allowable design working stress of the materials involved, including anchors and connections. Apply each load to produce the maximum stress in each component of steel stairs.
   1. Treads of Steel Stairs: Capable of withstanding a uniform load of 100 lbf per sq. ft. (4.8 kN/sq. m) or a concentrated load of 300 lbf (1.35 kN) on an area of 4 sq. inches (26 sq. cm) located in the center of the tread, whichever produces the greater stress. All pan-filled treads must be filled with lightweight concrete per 03300.
   2. Platforms of Steel Stairs: Capable of withstanding a uniform load of 100 lbf per sq. ft. (4.8 kN/sq. m).
   3. Stair Framing: Capable of withstanding stresses resulting from loads specified above as well as stresses resulting from railing system loads.
   4. Top Rail of Guardrail Systems: Capable of withstanding the following live loads applied as indicated:
      a. Concentrated load of 200 lbf (890 N) applied at any point and in any direction.
      b. Uniform load of 50 lbf per linear foot (730 N/m) applied horizontally and concurrently with uniform load of 100 lbf per linear foot (1460 N/m) applied vertically downward.
      c. Concentrated and uniform loads above need not be assumed to act concurrently.
   5. Handrails Not Serving as Top Rails: Capable of withstanding the following live loads applied as indicated:

      a. Concentrated load of 200 lbf (890 N) applied at any point and in any direction.
      b. Uniform load of 50 lbf per linear foot (730 N/m) applied in any direction.

c. Concentrated and uniform loads above need not be assumed to act concurrently.

6. Infill Area of Guardrail Systems: Capable of withstanding a horizontal concentrated live load of 200 lbf (890 N) applied to one sq. ft. (0.09 sq. m) at any point in the system including panels, intermediate rails, balusters, or other elements composing the infill area.
   a. Above load need not be assumed to act concurrently with loads on top rails of railing systems in determining stress on guard.

B. Code Compliance: Design stairs as required to comply with local life safety and building codes.

1.5 SUBMITTALS

A. General: Submit each item in this Paragraph according to the Conditions of the Contract and Division 1 Specification Sections.

B. Product data for metal stairs, stair treads, metal grating for landings, paint products, and grout.

C. Shop Drawings detailing fabrication and installation of metal stairs. Include plans, elevations, sections, and details of metal stairs and their connections. Show foundation designs, framing, anchorage and accessory items. Provide templates for anchors and bolts specified for installation under other sections.
   1. For installed metal stairs indicated to comply with certain design loadings, include structural analysis data, and design drawings and calculations sealed and signed by the qualified registered professional engineer who was responsible for their preparation.

D. Welder certificates signed by CONTRACTOR certifying that welders comply with requirements specified under the "Quality Assurance" Paragraph.

E. Qualification data for firms and persons specified in Paragraph 1.5 to demonstrate their capabilities and experience. Include list of completed projects with project names, addresses, names of architects and owners, and other information specified.

F. Each Shop Drawing Submittal shall include a hard copy of the relevant Specification Section and shall be clearly marked to indicate whether the requirements for equipment and/or services in the Specification Section are met by writing "accept" or "deviate" next to each Paragraph. If clarifications are needed to any of the Paragraphs in the Specification Sections due to deviations, they shall be addressed next to the Paragraph as such and explained further with any additional information necessary. If any exceptions and/or deviations are proposed to any of the Specifications, they shall be clearly noted as such in the Submittal, and an explanation of any deviation and/or exception shall be provided. The CONTRACTOR shall furnish equipment and/or services as specified if an

exception and/or deviation is rejected. Failure to include a copy of the marked-up specification sections, along with justification(s) for any requested deviations to the specification requirements, with the submittal shall be sufficient cause for rejection of the entire submittal with no further consideration.

1.6 QUALITY ASSURANCE

A. Fabricator Qualifications: Firm experienced in producing metal stairs similar to those indicated for this Project with a record of successful in-service performance and with sufficient production capacity to produce required units without delaying the Work.

B. Installer Qualifications: Arrange for metal stair installation specified in this Section by the same firm that fabricated them.

C. Engineer Qualifications: A Registered Professional Engineer legally authorized to practice in jurisdiction where Project is located and experienced in providing engineering services of the kind indicated that have resulted in the installation of metal stairs (including foundations, framing, handrails and railing systems) similar to this Project in material, design, and extent and that have a record of successful in-service performance.

D. Welding Standards: Comply with applicable provisions of AWS D1.1 "Structural Welding Code--Steel" and AWS D1.3 "Structural Welding Code--Sheet Steel".
   1. Certify that each welder has satisfactorily passed AWS qualification tests for welding processes involved and, if pertinent, has undergone recertification.

E. Stairways shall comply per International Building Code (IBC) Section: 1011. Provide complete plans, sections or details addressing all requirements on building plans as they apply to proposed building conditions. Address each requirement as each condition applies:
   1. Stairway width shall comply per Section 1011.2 requirements.
   2. Stairway headroom shall comply per Section 1011.3 requirements.
   3. Stairway treads and risers shall comply per Section 1011.5 requirements.
   4. Stairway dimensional uniformity shall comply per Section 1011.5.4 requirements.
   5. Stairway nosing and riser profile shall comply per Section 1011.5.5.
   6. Stairway landings shall comply per Section 1011.6.
   7. Stairway construction shall comply per Section 1011.7.
   8. Stairway vertical rise shall comply per Section 1011.8.
   9. Spiral stairways shall comply per Section 1011.10.

PART 2 - PRODUCTS

2.1 MATERIALS

A. Steel Sections: ASTM A36/A36M.

B. Steel Tubing: ASTM A500, Grade B, cold-formed structural tubing.

C. Steel Plates: ASTM A283.

D. Pipe: ASTM A 53/A 53M, Grade B, Schedule 40, black finish.

E. Ungalvanized Steel Sheet: ASTM A1008/A1008M, Designation SS, Grade 33, Type 1.

F. Galvanized Steel Sheet: ASTM A653/A653M, Structural Steel (SS), Grade 33/230, with G40/Z120 coating.

G. Bolts, Nuts, and Washers: ASTM A325 (ASTM A325M), Type 1, galvanized to ASTM A153/A153M where connecting galvanized components.

H. Exposed Mechanical Fastenings: Flush countersunk screws or bolts; consistent with design of stair structure.

2.2 MANUFACTURERS

A. Manufacturers: Subject to compliance with requirements, provide stair systems by one of the following:
   1. Alfab, Inc.
   2. American Stair Corp., Inc.
   3. Or approved equal.

2.3 FERROUS METALS

A. Metal Surfaces, General: For surfaces exposed to view in the completed Work, provide materials selected for their surface flatness, smoothness, and freedom from surface blemishes. Do not use materials with exposed pitting, seam marks, roller marks, rolled trade names, roughness, or, for steel sheet, variations in flatness exceeding those permitted by referenced standards for stretcher-leveled sheet.

B. Steel Plates, Shapes, and Bars: ASTM A36/A36M.

C. Steel Tubing: Product type (manufacturing method) and as follows:
   1. Hot-Formed Steel Tubing: ASTM A501.
      a. For exterior installations and where indicated, provide tubing with hot-dip galvanized coating per ASTM A53.

D. Steel Pipe: ASTM A53, standard weight (Schedule 40), unless otherwise indicated, or another weight required by structural loads.
   1. Galvanized finish for exterior installations and where indicated.

E. Steel Bars for Gratings: ASTM A569/A569M or ASTM A36/A36M.
   1. Galvanized finish for exterior installations and where indicated.

F. Wire Rod for Grating Cross Bars: ASTM A510 (ASTM A510M).
   1. Galvanized finish for exterior installations and where indicated.

G. Galvanized Steel Sheet: Quality as follows:
   1. Commercial Quality: ASTM A526/A526M, G90 (Z275) coating designation, unless otherwise indicated.

H. Welding Rods and Bare Electrodes: Select according to AWS Specifications for the metal alloy to be welded.

2.4 FASTENERS

A. General: Provide plated fasteners complying with ASTM B633, Class Fe/Zn 25 for electrodeposited zinc coating, for exterior use or where built into exterior walls. Select fasteners for the type, grade, and class required.

B. Bolts and Nuts: Regular hexagon-head type, ASTM A307, Grade A (ASTM F568, Property Class 4.6), with hex nuts, ASTM A563 (ASTM A 63M), and, where indicated, flat washers.

C. Machine Screws: ANSI B18.6.3 (ANSI B18.6.7M).

D. Plain Washers: Round, carbon steel, ANSI B18.22.1 (ANSI B18.22M).

E. Lock Washers: Helical, spring type, carbon steel, ANSI B18.21.1.

F. Expansion Anchors: Anchor bolt and sleeve assemblies of material indicated below with calculations and details demonstrating compliance with the applicable ICC-ES evaluation report.
   1. Material: Stainless steel components.

2.5 PAINT

A. Galvanizing Repair Paint: High-zinc-dust-content paint for regalvanizing welds in galvanized steel, with dry film containing not less than 94% zinc dust by weight, and complying with DOD-P-21035 or SSPC-Paint 20.

B. Bituminous Paint: Cold-applied asphalt mastic complying with SSPC-Paint 12, except containing no asbestos fibers.

2.6 GROUT

A. Non-shrink, Non-metallic Grout: Provide in accordance with Section 03600, Grout.

2.7 FABRICATION, GENERAL

A. Form metal stairs from materials of size, thickness, and shapes needed to comply with performance requirements indicated. Work to dimensions indicated or accepted on Shop Drawings, using proven details of fabrication and support.

B. Form exposed work true to line and level with accurate angles and surfaces and straight sharp edges.

C. Shear and punch metals cleanly and accurately.

D. Remove sharp or rough areas on exposed surfaces.

E. Ease exposed edges to a radius of approximately 1/32-inch, unless otherwise indicated. Form bent-metal corners to smallest radius possible without causing grain separation or otherwise impairing work.

F. Weld corners and seams continuously to comply with the following:
   1. Use materials and methods that minimize distortion and develop strength and corrosion resistance of base metals.
   2. Obtain fusion without undercut or overlap.
   3. Remove welding flux immediately.
   4. At exposed connections, finish exposed welds and surfaces smooth and blended so that no roughness shows after finishing, and welded surface matches contours of adjoining surfaces.

G. Form exposed connections with hairline joints, flush and smooth, using concealed fasteners wherever possible. Use exposed fasteners of type indicated or, if not indicated, Phillips flat-head (countersunk) screws or bolts. Locate joints where least conspicuous.

H. Shop Assembly: Preassemble in shop to greatest extent possible to minimize field splicing and assembly. Use connections that maintain structural value of joined pieces. Clearly mark units for field assembly and coordinated installation.

I. Fabricate joints that will be exposed to weather in a manner to exclude water, or provide weep holes where water may accumulate.

2.8 STEEL-FRAMED STAIRS

A. General: Construct stairs to conform to sizes and arrangements indicated, conforming to performance requirements indicated. Join pieces together by

welding, unless otherwise indicated. Provide complete stair assemblies, including metal framing, hangers, columns, handrails, railing systems, newels, balusters, struts, clips, brackets, bearing plates, toe plates, or other components necessary for the support of stairs and platforms, and as required to anchor and contain the stairs on the supporting structure.

1. Construct stair landings and platforms to elevations as indicated on the Drawings.

B. NAAMM Stair Standard: Comply with "Recommended Voluntary Minimum Standards for Fixed Metal Stairs" in NAAMM "Metal Stair Manual" for class of stair designated, except where more stringent requirements are indicated.

1. Industrial class, unless otherwise indicated.

C. Stair Framing: Fabricate stringers of structural steel channels, plates, or a combination thereof, as indicated. Provide closures for exposed ends of stringers. Construct platforms of structural steel channel headers and miscellaneous framing members as indicated. Bolt or weld headers to stringers; and bolt or weld newels and framing members to stringers and headers. If using bolts, fabricate and join so bolts are not exposed on finish surfaces.

1. Where masonry walls support steel stairs, provide temporary supporting struts designed for erecting steel stair components before installing masonry.

D. Floor Grating Treads and Platforms: Provide patterns, spacing, and bar sizes indicated.

E. Fabricate treads from punched (ventilated) extruded plank, with serrated, slip-resistant surface.

1. Surface: Serrated.
2. Finish: Galvanized.

F. Fabricate grating treads with steel plate nosing and with steel angle or steel plate carrier at each end for stringer connections. Secure treads to stringers with bolts or welds, at CONTRACTOR'S option.

2.9 STEEL PIPE HANDRAILS AND RAILING SYSTEMS FOR METAL STAIRS

A. General: Fabricate pipe handrails and railing systems to comply with requirements indicated for design, dimensions, details, finish, and member sizes, including wall thickness of pipe, post spacings, and anchorage, but not less than that required to support structural loads.

B. Interconnect railing and handrail members by butt-welding or welding with internal connectors, at fabricator's option, unless otherwise indicated.

1. At tee and cross intersections, cope ends of intersecting members to fit contour of pipe to which end is joined, and weld all around.

C. Form changes in direction of handrails and rails as follows:

1. By welding in prefabricated flush elbow fittings.
2. By flush radius bends.
3. By bending.
4. By any method indicated above, applicable to change of direction involved.

D. Form simple and compound curves by bending pipe in jigs to produce uniform curvature for each repetitive configuration required; maintain cylindrical cross section of pipe throughout entire bend without buckling, twisting, cracking, or otherwise deforming exposed surfaces of pipe.

E. Provide wall returns at ends of wall-mounted handrails, unless otherwise indicated.

F. Close exposed ends of pipe by welding 3/16-inch thick steel plate in place or with prefabricated fittings, except where clearance of end of pipe and adjoining wall surface is 1/4-inch or less.

G. Brackets, Flanges, Fittings, and Anchors: Provide wall brackets, end closures, flanges, miscellaneous fittings, and anchors for interconnections of pipe and attachment of handrails and railing systems to other work. Furnish inserts and other anchorage devices for connecting handrails and railing systems to concrete or masonry work.
   1. Connect railing posts to stair framing by direct welding, unless otherwise indicated.

H. Fillers: Provide steel sheet or plate fillers of thickness and size indicated or required to support structural loads of handrails where needed to transfer wall bracket loads through wall finishes to structural supports, or where required by code. Size fillers to suit wall finish thicknesses. Size fillers to produce adequate bearing to prevent bracket rotation and overstressing of substrate.

I. For galvanized handrails and railing systems, provide galvanized fittings, brackets, fasteners, sleeves, and other ferrous components.

2.10 FINISHES

A. Do not factory prime metal stairs. Prime and finish coats will be field-applied directly to bare metal.

B. Galvanizing: Hot-dip galvanize items indicated to be galvanized to comply with applicable standard listed below:
   1. ASTM A153 for galvanizing iron and steel hardware.
   2. ASTM A123 for galvanizing both fabricated and unfabricated iron and steel products made of uncoated rolled, pressed, and forged shapes, plates, bars, and strip 0.0299-inch thick and heavier.
   3. Fill vent and drain holes that will be exposed in the finished work, unless indicated to remain as weep holes, by plugging with zinc solder and filing off smooth.

PART 3 - EXECUTION

3.1 PREPARATION

A. Coordinate and furnish anchorages, setting drawings, diagrams, templates, instructions, and directions for installing anchorages, including concrete inserts, weld plates, and anchor bolts. Coordinate delivery of such items to Project site.

3.2 INSTALLATION, GENERAL

A. Fastening to Construction: Provide anchorage devices and fasteners where necessary for securing steel stairs to construction; include threaded fasteners for concrete and masonry inserts, through-bolts, lag bolts, and other connectors as required.
   1. Provide foundations, bearing plates, anchor bolts, etc., as required by stair manufacturer and as required to comply with Performance Requirements of this Specifications and Section 02315, Earthwork, Excavation and Backfill.

B. Cutting, Fitting, and Placement: Perform cutting, drilling, and fitting required for installing steel stairs. Set units accurately in location, alignment, and elevation; with edges and surfaces level, plumb, true, and free of rack; and measured from established lines and levels.

C. Install steel stairs by welding stair framing to steel structure or to weld plates cast into concrete, except where otherwise indicated.

D. Provide temporary bracing or anchors in formwork for items that are to be built into concrete, masonry, or similar construction.

E. Fit exposed connections accurately together to form hairline joints. Weld connections that are not to be left as exposed joints but cannot be shop-welded because of shipping size limitations. Do not weld, cut, or abrade the surfaces of exterior units that have been hot-dip galvanized after fabrication and are intended for bolted field connections.

F. Field Welding: Comply with the following requirements:
   1. Use materials and methods that minimize distortion and develop strength and corrosion resistance of base metals.
   2. Obtain fusion without undercut or overlap.
   3. Remove welding flux immediately.
   4. At exposed connections, finish exposed welds and surfaces smooth and blended so that no roughness shows after finishing and welded surface matches contours of adjoining surfaces.

3.3 INSTALLING STEEL STAIRS WITH GROUTED BASE PLATES

A. Clean concrete and masonry bearing surfaces of bond-reducing materials and roughen to improve bond to surfaces. Clean bottom surface of base plates.

B. Set steel stair base plates on wedges or other adjustable devices. After the stairs have been positioned and aligned, tighten the anchor bolts. Do not remove wedges or shims, but if protruding, cut off flush with the edge of the bearing plate before packing with grout.
   1. Use non-metallic, non-shrink grout, unless otherwise indicated.
   2. Pack grout solidly between bearing surfaces and plates to ensure that no voids remain.

3.4 INSTALLING STEEL PIPE RAILINGS AND HANDRAILS

A. Adjust handrails and railing systems prior to anchoring to ensure matching alignment at abutting joints. Space posts at spacing indicated or, if not indicated, as required by design loadings. Plumb posts in each direction. Secure posts and railing ends to building construction as follows:
   1. Anchor posts to steel by welding directly to steel supporting members.
   2. Anchor handrail ends into concrete and masonry with steel round flanges welded to rail ends and anchored into wall construction with drilled-in expansion anchors.

B. Secure handrails to wall with wall brackets and end fittings. Provide bracket with 1-1/2-inch clearance from inside face of handrail and finished wall surface. Locate brackets as indicated or, if not indicated, at spacing required to support structural loads. Secure wall brackets and wall return fittings to building construction as follows:
   1. Use type of bracket with pre-drilled hole for exposed bolt anchorage.
   2. For concrete and solid masonry anchorage, use drilled-in expansion anchor.
   3. For hollow masonry anchorage, use toggle bolts having square heads.

3.5 ADJUSTING AND CLEANING

A. For galvanized surfaces, clean welds, bolted connections, and abraded areas and apply galvanizing repair paint to comply with ASTM A780.

++ END OF SECTION ++

SECTION 05521

ALUMINUM HANDRAIL

PART 1 - GENERAL

1.1 RELATED DOCUMENTS

A. Drawings and General Provisions of the Contract, including General and Supplementary Conditions and Division 1, General Requirements, Specification Sections, apply to this Section.

B. Furnish and install aluminum handrail, as indicated on the Drawings and as specified herein.

1.2 SUMMARY

A. This Section includes the following aluminum pipe and tube handrails and railing systems for the Airport WRF Expansion, as indicated on the Drawings.

B. For Maintenance Building Handrail Specifications, see Architectural Drawings.

C. Related Sections: Requirements relating to this Section are contained in the following Sections:
   1. Section 05510, Metal Stairs, for steel pipe handrails and railing systems included with metal stairs.

1.3 DEFINITIONS

A. Definitions in ASTM E985 for railing-related terms apply to this Section.

1.4 PERFORMANCE REQUIREMENTS

A. General: In engineering handrail and railing systems to withstand structural loads indicated, determine allowable design working stresses of materials based on the following:
   1. Aluminum: AA "Specifications for Aluminum Structures, Welding Aluminum, Designation System".
   2. OSHA requirements, as well as the City Code requirements.

B. Structural Performance of Handrails and Railing Systems: Engineer, fabricate, and install handrails and railing systems to withstand the following structural loads without exceeding the allowable design working stress of the materials for handrails, railing systems, anchors, and connections. Apply each load to produce the maximum stress in each of the respective components comprising handrails and railing systems.

1. Top Rail of Guardrail Systems: Capable of withstanding the following live loads applied as indicated:
    a. Concentrated load of 200 lbf (890 N) applied at any point and in any direction.
    b. Uniform load of 50 lbf per linear foot (730 N/m) applied horizontally and concurrently with uniform load of 100 lbf per linear foot (1460 N/m) applied vertically downward.
    c. Concentrated and uniform loads above need not be assumed to act concurrently.
2. Handrails Not Serving as Top Rails: Capable of withstanding the following live loads applied as indicated:
    a. Concentrated load of 200 lbf (890 N) applied at any point and in any direction.
    b. Uniform load of 50 lbf per linear foot (730 N/m) applied in any direction.
    c. Concentrated and uniform loads above need not be assumed to act concurrently.
3. Infill Area of Guardrail Systems: Capable of withstanding a horizontal concentrated live load of 200 lbf (890 N) applied to 1 sq. ft. (0.09 sq. m) at any point in the system including panels, intermediate rails, balusters, or other elements composing the infill area.
    a. Above load need not be assumed to act concurrently with loads on top rails of railing systems in determining stress on guard.

C. Thermal Movements: Allow for thermal movement resulting from the following maximum change (range) in ambient temperature in engineering, fabricating, and installing handrails and railing systems to prevent buckling, opening of joints, overstressing of components and connections, and other detrimental effects. Base engineering calculation on actual surface temperatures of materials due to both solar heat gain and nighttime sky heat loss.
    1. Temperature Change (Range): 120° F (67° C) ambient 180° F (100° C) material surfaces.

D. Control of Corrosion: Prevent galvanic action and other forms of corrosion by insulating metals and other materials from direct contact with incompatible materials.

1.5 SUBMITTALS

A. General: Submit each item in this Paragraph according to the Conditions of the Contract and Division 1, General Requirements, Specification Sections.

B. Product data for mechanically connected handrails and railing systems, each kind of fitting, grout, anchoring cement, and paint products.

C. Shop drawings showing fabrication and installation of handrails and railing systems including plans, elevations, sections, details of components, and attachments to other units of Work.
   1. For installed handrails and railing systems indicated to comply with certain design loadings, include structural analysis data, and design drawings and calculations sealed and signed by the qualified professional engineer who was responsible for their preparation.

D. Samples for initial selection in the form of short sections of railing or flat sheet metal samples showing available mechanical finishes.

E. Samples for verification of each type of exposed finish required, prepared on components indicated below that are of the same thickness and metal indicated for final unit of Work. Where finishes involve normal color and texture variations, include sample sets showing the full range of variations expected.
   1. 6-inch long sections of each distinctly different linear railing member, including handrails, top rails, posts, and balusters.
   2. Fittings and brackets.

F. Qualification data for firms and persons specified in Paragraph 1.6 to demonstrate their capabilities and experience. Include a list of completed projects with project names, addresses, names of architects and owners, and other information specified.

G. Product test reports from a qualified independent testing agency evidencing compliance of handrails and railing systems with requirements based on comprehensive testing of current products.

H. A copy of this specification section, with addendum updates included, and all referenced and applicable sections, with addendum updates included, with each paragraph check-marked to indicate specification compliance or marked to indicate requested deviations from specification requirements. Check marks (□) shall denote full compliance with a paragraph as a whole. If deviations from the specifications are indicated, and therefore requested by the CONTRACTOR, each deviation shall be underlined and denoted by a number in the margin to the right of the identified paragraph, referenced to a detailed written explanation of the reasons for requesting the deviation. The ENGINEER shall be the final authority for determining acceptability of requested deviations. The CONTRACTOR shall furnish equipment and/or services as specified if an exception and/or deviation is rejected. The remaining portions of the paragraph not underlined will signify compliance on the part of the CONTRACTOR with the specifications. Failure to include a copy of the marked-up specification sections, along with justification(s) for any requested deviations to the specification requirements, with the submittal shall be sufficient cause for rejection of the entire submittal with no further consideration.

I. The CONTRACTOR shall submit the preventive maintenance information package as part of the shop drawing submittal package to the ENGINEER for

review and approval. **SHOP DRAWING SUBMITTAL PACKAGE WILL NOT BE APPROVED WITHOUT ACCEPTANCE OF PREVENTIVE MAINTENANCE INFORMATION.**

1.6 QUALITY ASSURANCE

A. Single-Source Responsibility: Obtain handrails and railing systems of each type and material from a single manufacturer.

B. Engineer Qualifications: Professional Registered Engineer legally authorized to practice in the jurisdiction where Project is located and experienced in providing engineering services of the kind indicated for handrails and railing systems similar to this Project in material, design, and extent, and that have a record of successful in-service performance.

C. Handrails shall comply per IBC Section 1014. Provide complete plans, sections or details on building plans as they apply to proposed building conditions. Address each requirement as each condition applies:
   1. Height requirements shall comply per Section: 1014.2
   2. Graspability requirements shall comply per Section: 1014.3.
   3. Continuity requirements shall comply per Section: 1014.4.
   4. Extension requirements shall comply per Section: 1014.6
   5. Clearance requirements shall comply per Section: 1014.7.

D. Guards shall comply per IBC Sections: 1015. Provide complete plans, sections or details on building plans addressing all requirements as they apply to site or building conditions.
   1. Location requirements shall comply per Section: 1015.2.
   2. Height requirements shall comply per Section: 1015.3.
   3. Opening limitations shall comply per Section: 1015.4.

1.7 STORAGE

A. Store handrails and railing systems inside a well-ventilated area, away from uncured concrete and masonry and protected from weather, moisture, soiling, abrasion, extreme temperatures, and humidity.

1.8 PROJECT CONDITIONS

A. Field Measurements: Where handrails and railing systems are indicated to fit to other construction, check actual dimensions of other construction by accurate field measurements before fabrication; show recorded measurements on final Shop Drawings. Coordinate fabrication schedule with construction progress to avoid delaying the Work.

B. Where field measurements cannot be made without delaying the Work, guarantee dimensions and proceed with fabricating handrails and railing systems without field

measurements. Coordinate other construction to ensure that actual dimensions correspond to guaranteed dimensions.

1.9 SEQUENCING AND SCHEDULING

A. Sequence and coordinate installation of wall handrails as follows:
   1. Mount handrails only on completed walls. Do not support handrails temporarily by any means not satisfying structural performance requirements.

PART 2 - PRODUCTS

2.1 MANUFACTURERS

A. Manufacturer: Subject to compliance with requirements, manufacturers offering handrails and railing systems include, but are not limited to, the following:
   1. Aluminum Pipe and Tube Railings:
      a. Moultrie Manufacturing Co., "Wesrail", or approved equal.
      b. Tuttle Aluminum International, Inc.
      c. Aluma Guard Corp.
      d. Or approved equal.

2.2 METALS

A. General: Provide metals free from surface blemishes where exposed to view in the finished unit. Exposed-to-view surfaces exhibiting pitting, seam marks, roller marks, stains, discolorations, or other imperfections on finished units are not acceptable.

B. Aluminum: Alloy and temper recommended by aluminum producer and finisher for type of use and finish indicated, and with not less than the strength and durability properties of the alloy and temper designated below for each aluminum form required:
   1. Extruded Bar and Tube: ASTM B221 (ASTM B221M), alloy 6063T5/T52.
   2. Extruded Structural Pipe and Tube: ASTM B429, 6063-T5/T52.
   3. Drawn Seamless Tube: ASTM B210 (ASTM B210M), 6063-T832.
   4. Plate and Sheet: ASTM B209 (ASTM B209M), 6061-T6.
   5. Die and Hand Forgings: ASTM B247 (ASTM B247M), 6061-T6.
   6. Castings: ASTM B26/B26M, A356-T6.

C. Brackets, Flanges, and Anchors: Cast or formed metal of the same material and finish as supported rails, unless otherwise indicated.

2.3 WELDING MATERIALS, FASTENERS, AND ANCHORS

A. Welding Electrodes and Filler Metal: Provide type and alloy of filler metal and electrodes as recommended by producer of metal to be welded and as required for color match, strength, and compatibility in fabricated items.

B. Fasteners for Anchoring Railings to Other Construction: Select fasteners of the type, grade, and class required to produce connections that are suitable for anchoring railings to other types of construction indicated and capable of withstanding design loadings.
   1. For aluminum railings, provide fasteners fabricated from Type 304 or Type 316 stainless steel.

C. Fasteners for Interconnecting Railing Components: Use fasteners of same basic metal as the fastened metal, unless otherwise indicated. Do not use metals that are corrosive or incompatible with materials joined. All handrails and components of dissimilar material shall be protected from electrolysis by zinc chromate primer.
   1. Provide concealed fasteners for interconnecting railing components and their attachment to other Work, except where exposed fasteners are unavoidable or are the standard fastening method for handrail and railing system indicated.
   2. Provide Phillips flat-head machine screws or Allen head flush machine screws for exposed fasteners, unless otherwise indicated.

D. Cast-in-Place and Post-Installed Anchors: Epoxy anchors, fabricated from corrosion-resistant materials, capable of sustaining, without failure, a load equal to six times the load imposed when installed in unit masonry and equal to four times the load imposed when installed in concrete, as determined by testing per ASTM E488, conducted by a qualified, independent testing agency.

2.4 PAINT

A. Bituminous Paint: Cold-applied asphalt mastic complying with SSPC-Paint 12, except containing no asbestos fibers.

2.5 GROUT AND ANCHORING CEMENT

A. Non-shrink, Non-metallic Grout: Premixed, factory-packaged, non-staining, non-corrosive, nongaseous grout complying with ASTM C1107. Provide grout specifically recommended by manufacturer for interior and exterior applications.

B. Erosion-Resistant Anchoring Cement: Factory-packaged, non-shrink, non-staining, hydraulic controlled expansion cement formulation for mixing with water at Project site to create pourable anchoring, patching, and grouting compound. Provide formulation that is resistant to erosion from water exposure without need for protection by a sealer or waterproof coating and is recommended for exterior use by manufacturer.

C. Manufacturers: Subject to compliance with requirements, provide products by one of the following:
   1. Non-shrink, Non-metallic Grouts:
      a. Five Star Grout; Five Star Products.
      b. Construction Grout by BASF.
      c. Euco N-S Grout by The Euclid Chemical Company.
      d. Or approved equal
   2. Erosion-Resistant Anchoring Cement:
      a. Bonsal Anchor Cement; Sakrete Co.
      b. Super Por-Rok; CGM Incorporated.
      c. Thorogrip; Thoro Systems Products.
      d. Or approved equal.

2.6 FABRICATION

A. General: Fabricate handrails and railing systems to comply with requirements indicated for design, dimensions, details, finish, and member sizes, including wall thickness of hollow members, post spacings, and anchorage, but not less than those required to support structural loads.

B. Assemble handrails and railing systems in the shop to the greatest extent possible to minimize field splicing and assembly. Disassemble units only as necessary for shipping and handling limitations. Clearly mark units for reassembly and coordinated installation. Use connections that maintain structural value of joined pieces. Clearly mark units for reassembly and coordinated installation.

C. Form changes in direction of members as follows:
   1. By flush radius bends.
   2. By bending.
   3. By mitering at elbow bends.
   4. By insertion of prefabricated flush elbow fittings.
   5. By any method indicated above, applicable to change of direction involved.

D. Form simple and compound curves by bending pipe in jigs to produce uniform curvature for each repetitive configuration required; maintain cylindrical cross section of pipe throughout entire bend without buckling, twisting, cracking, or otherwise deforming exposed surfaces of pipe.

E. Non-welded Connections: Fabricate handrails and railing systems by connecting members with railing manufacturer's standard concealed mechanical fasteners and fittings, unless otherwise indicated. Fabricate members and fittings to produce flush, smooth, rigid, hairline joints.
   1. Fabricate splice joints for field connection using epoxy structural adhesive where this represents manufacturer's standard splicing method.

F. Brackets, Flanges, Fittings, and Anchors: Provide manufacturer's standard wall brackets, flanges, miscellaneous fittings, and anchors to interconnect handrail and railing system members to other construction.

G. Provide inserts and other anchorage devices to connect handrails and railing systems to concrete or masonry work. Fabricate anchorage devices capable of withstanding loads imposed by handrails and railing systems. Coordinate anchorage devices with supporting structure.

H. For railing posts set in concrete, provide preset sleeves of steel, not less than 6-inches long with inside dimensions not less than 1/2-inch greater than outside dimensions of post, and steel plate forming bottom closure.

I. For removable railing posts, fabricate slip-fit sockets from PVC pipe whose inside diameter is sized for a close fit with posts and to limit deflection of post without lateral load, measured at top, to not more than 1/12 of post height. Provide socket covers designed and fabricated to resist accidental dislodgement.
   1. Provide chain with eye, snap hook, and staple across gaps formed by removable railing sections at locations indicated. Fabricate from same metal as railings.
   2. Shear and punch metals cleanly and accurately. Remove burrs from exposed cut edges.
   3. Ease exposed edges to a radius of approximately 1/32-inch, unless otherwise indicated. Form bent-metal corners to the smallest radius possible without causing grain separation or otherwise impairing work.
   4. Cut, reinforce, drill, and tap components, as indicated, to receive finish hardware, screws, and similar items.
   5. Provide weepholes, or another means to evacuate entrapped water, in hollow sections of railing members for both interior and exterior locations.
   6. Provide wall returns at ends of wall-mounted handrails, unless otherwise indicated.
   7. Toe Boards: Where required by OSHA or local building codes, provide toe boards at railings around openings and at the edge of open-sided floors and platforms. Fabricate to dimensions and details indicated.

2.7 FINISHES, GENERAL

A. Comply with NAAMM "Metal Finishes Manual" for recommendations relative to applying and designating finishes.

B. Protect mechanical finishes on exposed surfaces from damage by applying a strippable, temporary protective covering prior to shipment.

C. Appearance of Finished Work: Variations in appearance of abutting or adjacent pieces are acceptable if they are within one half of the range of approved samples. Noticeable variations in the same piece are not acceptable. Variations in

appearance of other components are acceptable if they are within the range of approved samples and they are assembled or installed to minimize contrast.

D. Provide exposed fasteners with finish matching appearance, including color and texture, of handrails and railing systems.

2.8 ALUMINUM FINISHES

A. Finish designations prefixed by AA conform to the system established by the Aluminum Association for designating aluminum finishes.

B. Class II, Clear Anodic Finish: AA-M12C22A31 (Mechanical Finish: nonspecular as fabricated; Chemical Finish: etched, medium matte; Anodic Coating: Architectural Class II, clear coating 0.4 mil or thicker) complying with AAMA 607.1.

PART 3 - EXECUTION

3.1 PREPARATION

A. Coordinate setting drawings, diagrams, templates, instructions, and directions for installing anchorages, such as sleeves, concrete inserts, anchor bolts, and miscellaneous items having integral anchors that are to be embedded in concrete as masonry construction. Coordinate delivery of such items to Project site.

3.2 INSTALLATION, GENERAL

A. All aluminum handrails shall be erected within Aluminum Association Tolerances and as specified herein.

B. Fit exposed connections accurately together to form tight, hairline joints.

C. Cutting, Fitting, and Placement: Perform cutting, drilling, and fitting required for installing handrails and railing systems. Set handrails and railing systems accurately in location, alignment, and elevation, measured from established lines and levels and free from rack.
   1. Do not weld, cut, or abrade surfaces of handrails and railing components that have been coated or finished after fabrication and are intended for field connection by mechanical or other means without further cutting or fitting.
   2. Set posts plumb within a tolerance of 1/4-inch in 12 feet.
   3. Align rails so that variations from level for horizontal members and from parallel with rake of steps and ramps for sloping members do not exceed 1/4-inch in 12 feet.

D. Corrosion Protection: Coat concealed surfaces of aluminum that will come into contact with grout, concrete, masonry, wood, or dissimilar metals with a heavy coat of bituminous paint.

E. Adjust handrails and railing systems prior to anchoring to ensure matching alignment at abutting joints. Space posts at interval indicated but not less than that required by design loadings.

F. Fastening to In-Place Construction: Provide anchorage devices and fasteners where necessary for securing handrails and railing systems and for properly transferring loads to in-place construction.

3.3 RAILING CONNECTIONS

A. Non-welded Connections: Use mechanical joints for permanently connecting railing components. Locate exposed fasteners in least conspicuous locations. Seal recessed holes of exposed locking screws with plastic filler, cement colored to match finish of handrails and railing systems.

B. Expansion Joints: Install expansion joints at locations to accommodate thermal movement. Provide slip-joint internal sleeve extending 2-inches beyond joint on either side; fasten internal sleeve securely to one side; locate joint within 6-inches of post.

3.4 ANCHORING POSTS

A. Anchor posts in concrete as follows:
   1. Anchor posts in concrete with pipe sleeves preset and anchored into concrete. After posts have been inserted into sleeves, solidly fill annular space between post and sleeve with the following anchoring material, mixed and placed to comply with anchoring material manufacturer's directions.
      a. Non-shrink, non-metallic grout or anchoring cement.
   2. Anchor posts in concrete by forming or core-drilling holes not less than 5-inches deep and 3/4-inch greater than outside diameter of post. Clean holes of all loose material, insert posts, and fill annular space between post and concrete with the following anchoring material, mixed and placed to comply with anchoring material manufacturer's directions.
      a. Non-shrink, non-metallic grout or anchoring cement.
   3. Any of the above methods.

B. Leave anchorage joint exposed, wipe off surplus anchoring material, and leave 1/8-inch build-up, sloped away from post.

C. Anchor posts to metal surfaces with oval flanges, angle type, or floor type as required by conditions, connected to posts and to metal supporting members as follows:

1. For aluminum pipe railings, attach posts as indicated using fittings designed and engineered for this purpose.

D. Install removable railing sections where indicated in slip-fit metal sockets cast into concrete. Accurately locate sockets to match post spacing.

3.5 ANCHORING RAIL ENDS

A. Anchor rail ends into concrete and masonry with round flanges connected to rail ends and anchored into wall construction with post installed anchors and bolts.

B. Anchor rail ends to metal surfaces with oval or round flanges.
   1. Connect flanges to rail ends using non-welded connections.
   2. Bolt flanges to metal surfaces.

3.6 ATTACHING HANDRAILS TO WALLS

A. Attach handrails to wall with wall brackets and end fittings. Provide bracket with 1-1/2-inch clearance from inside face of handrail to finished wall surface.

B. Locate brackets as indicated or, if not indicated, at spacing required to support structural loads.

C. Secure wall brackets and wall return fittings to building construction as follows:
   1. Use type of bracket with flange tapped for concealed anchorage to threaded hanger bolt or use type of bracket with pre-drilled hole for exposed bolt anchorage.
   2. For concrete and solid masonry anchorage, use drilled-in expansion shield and either concealed hanger bolt or exposed lag bolt, as applicable.
   3. For hollow masonry anchorage, use toggle bolts with square heads.

3.7 ADJUSTING AND CLEANING

A. Clean metal by washing thoroughly with clean water and soap, followed by rinsing with clean water.

3.8 PROTECTION

A. Protect finishes of handrails and railing systems from damage during construction period with temporary protective coverings approved by railing manufacturer. Remove protective coverings at time of Substantial Completion.

B. Restore finishes damaged during installation and construction period so that no evidence remains of correction work. Return items that cannot be refinished in the field to the shop; make required alterations and refinish entire unit, or provide new units.

++ END OF SECTION ++

SECTION 05530

ALUMINUM GRATING

PART 1 - GENERAL

1.1 RELATED DOCUMENTS

A. Drawings and General Provisions of the Contract, including General and Supplementary Conditions and Division 1, General Requirements, Specification Sections, apply to this Section.

B. Aluminum grating shall be provided at all locations requiring grating, as shown on the plans, except the locations as shown in the drawings and as noted in Section 06600, Fiberglass Fabrications, where FRP grating is required.

1.2 SUMMARY

A. This Section includes the following:
   1. Metal bar gratings.
   2. Metal frames and supports and steps for gratings.

1.3 SUBMITTALS

A. General: Submit each item in this Paragraph according to the Conditions of the Contract and Division 1, General Requirements, Specification Sections.

B. Product data for formed metal grating, manufacturer's clips, supports, and anchorage devices for gratings, and paint products.

C. Shop Drawings detailing fabrication and erection of gratings. Include layout Drawings for all locations, sections, and details of connections. Show anchorage, supports, and accessory items. Provide templates for anchors and bolts specified for installation under other Sections.

D. Welder certificates signed by the CONTRACTOR certifying that welders comply with requirements specified under Paragraph 1.4.

E. Qualification data for firms and persons specified in Paragraph 1.4 to demonstrate their capabilities and experience. Include lists of completed projects with project name, addresses and names of architects and OWNER, and other information specified.

F. Design drawings and calculations for beams, posts, ledgers, and steps for support of grating assembly sealed and signed by an engineer registered in the State of Arizona.

G. A copy of this specification section, with addendum updates included, and all referenced and applicable sections, with addendum updates included, with each paragraph check-marked to indicate specification compliance or marked to indicate requested deviations from specification requirements. Check marks (□) shall denote full compliance with a paragraph as a whole. If deviations from the specifications are indicated, and therefore requested by the CONTRACTOR, each deviation shall be underlined and denoted by a number in the margin to the right of the identified paragraph, referenced to a detailed written explanation of the reasons for requesting the deviation. The ENGINEER shall be the final authority for determining acceptability of requested deviations. The CONTRACTOR shall furnish equipment and/or services as specified if an exception and/or deviation is rejected. The remaining portions of the paragraph not underlined will signify compliance on the part of the CONTRACTOR with the specifications. Failure to include a copy of the marked-up specification sections, along with justification(s) for any requested deviations to the specification requirements, with the submittal shall be sufficient cause for rejection of the entire submittal with no further consideration.

H. The CONTRACTOR shall submit the preventive maintenance information package as part of the shop drawing submittal package to the ENGINEER for review and approval. **SHOP DRAWING SUBMITTAL PACKAGE WILL NOT BE APPROVED WITHOUT ACCEPTANCE OF PREVENTIVE MAINTENANCE INFORMATION.**

1.4 QUALITY ASSURANCE

A. Fabricator Qualifications: Firm experienced in producing gratings similar to that indicated for this Project with a record of successful in-service performance and with sufficient production capacity to produce required units without delaying the Work.

B. Welding Standards: Comply with applicable provisions of "AWS D1.2 Structural Welding Code--Aluminum".
   1. Certify that each welder has satisfactorily passed AWS qualification tests for welding processes involved and, if pertinent, has undergone recertification.

1.5 PROJECT CONDITIONS

A. Field Measurements: Check actual locations of walls and other construction to which gratings must fit by accurate field measurements before fabrication; show recorded measurements on final Shop Drawings. Coordinate fabrication schedule with construction progress to avoid delaying the Work.
   1. Where field measurements cannot be made without delaying the Work, guarantee dimensions and proceed with fabricating gratings without field measurements. Coordinate construction to ensure that actual dimensions correspond to guaranteed dimensions. Allow for trimming and fitting.

PART 2 - PRODUCTS

2.1 ALUMINUM

A. Extruded Bars and Shapes: ASTM B221 (ASTM B221M), alloys as follows:
   1. 6061-T6 or 6063-T6 for bearing bars of gratings and shapes.
   2. 6061-T1 for grating cross bars.

B. Aluminum Rivets: ASTM B316 (ASTM B316M), alloy 6053-T4 or 6061-T6.

C. Aluminum Sheet: ASTM B209 (ASTM B209M), alloy 5052-H32.

2.2 FASTENERS

A. Fasteners for Aluminum Gratings: Provide fasteners of aluminum or nonmagnetic stainless steel warranted by the manufacturer to be non-corrosive and compatible with aluminum gratings and other components.

2.3 FABRICATION

A. General: Form from materials of size, thickness, and shapes indicated but not less than that needed to comply with performance requirements indicated. Work to dimensions indicated or accepted on Shop Drawings, using proven details of fabrication and support.
   1. Shear and punch metals cleanly and accurately.
   2. Remove sharp or rough areas on exposed traffic surfaces.
   3. Ease exposed edges to a radius of approximately 1/32-inch, unless otherwise indicated.

B. Welding: Comply with AWS recommendations and the following:
   1. Use materials and methods that minimize distortion and develop strength and corrosion resistance of base metals.
   2. Obtain fusion without undercut or overlap.
   3. Remove welding flux immediately.

C. Provide for anchorage of type indicated; coordinate with supporting structure. Fabricate and space anchoring devices to secure gratings, frames, and supports rigidly in place and to support indicated loads.

D. Shop Assembly: Preassemble items in shop to greatest extent possible to minimize field splicing and assembly. Disassemble units only as necessary for shipping and handling limitations. Use connections that maintain structural value of joined pieces. Clearly mark units for reassembly and coordinated installation.

2.4 SUPPORTS

A. The design of the supports for the gratings shall be such that they shall not interfere with processes, become wetted by liquids being processed or flowing beneath the gratings, or interfere with the weather protective coatings. Anchor bolts shall not penetrate protective coatings, concrete liner materials, or interfere with processing components.

B. The grating manufacturer is responsible for the design of all grating supports to meet the load requirements stated below. The grating manufacturer shall provide all columns, beams, embeds, and any other supporting devices required.

C. The manufacturer shall coordinate with the CONTRACTOR for all required embeds and anchors.

D. All supports shall be aluminum or stainless steel.

E. All aluminum surfaces to be in contact with or embedded in concrete shall be coated with bituminous paint.

2.5 METAL BAR GRATINGS

A. General: Produce metal bar gratings of description indicated per NAAMM marking system that comply with the following:
   1. Metal Bar Grating Standard: "Standard Specifications for Metal Bar Grating and Metal Bar Grating Treads" published in ANSI/NAAMM MBG 531 "Metal Bar Grating Manual".

B. Fabricate pressure-locked I-bar aluminum gratings to comply with requirements indicated below:
   1. Grating Mark: For spans up to 7 feet use AF-19-4, swaged grating with bearing bars 1-3/16-inch o.c. and cross bars 4-inch o.c. For spans 7 feet or larger use AI-11-4, swaged grating with bearing bars 11/16-inch o.c. and cross bars 4-inch o.c.
   2. Bearing Bar Size: Use 1-inch by 3/16-inch minimum for spans less than or equal to 3 feet, use 1-1/2-inch by 3/16-inch minimum for spans up to 5 feet, use 2-inch by 3/16-inch minimum for spans up to 6 feet, and use 2-1/2-inch by 3/16-inch minimum for spans up to 8 feet

C. Design grating for the following minimum loading requirements in accordance with the Building Code. The following loading conditions do not need to be applied simultaneously.
   1. Uniformly distributed live load: 300 psf (with no limit on deflection)
   2. Concentrated live load: 3000 lbs on 2.5 ft x 2.5 ft area (with no limit on deflection).

3. Maximum deflection under uniformly distributed live load of 100 psf or concentrated live load of 1000 lbs on 1.0 ft x 1.0ft area: ¼" max or span/240, whichever is less
4. Maximum Aluminum fiber stress: 12,000 psi (under live load)

D. Design treads of steps for the following minimum loading requirements.
1. Uniformly distributed live load: 100 psf
2. Concentrated live load: of 300 lbs on an area of 4 sq. inches located in the center of the tread, whichever produces the greater stress.

E. Design step framing capable of withstanding a uniformly distributed live load of 100 psf.

F. Individual removable sections of grating shall be installed in sizes that shall not exceed 100 lbs per section for spans larger than 6 feet or 70 lbs per section for spans 6 feet or less.

G. Traffic Surface for Aluminum Bar Gratings: Serrated.

H. Aluminum Finish: Clear Anodized, 200IR Finish.

I. Fabricate removable grating sections with banding bars attached by welding to entire perimeter of each section. Include anchors and fasteners of type indicated, or if not indicated, as recommended by manufacturer, for attachment to supports.
1. Provide not less than four flange blocks for each section of aluminum I-bar grating, with block designed to fit over lower flange of I-shaped bearing bars.

J. Furnish self-drilling fasteners with washers for each clip required.

K. Furnish toe plates, to protect openings in the grating, to be attached in the field
1. Toe Plate Height: 4-inches, unless a greater height is indicated.

L. Fabricate cutouts in grating sections for penetrations indicated. Arrange cutouts to permit grating removal without disturbing items penetrating gratings.
1. Edge band openings in grating that interrupt four or more bearing bars with bars of same size and material as bearing bars.
2. Do not notch bearing bars at supports to maintain elevation.

M. Available Manufacturers: Subject to compliance with requirements, manufacturers offering metal bar gratings that may be incorporated in the Work include, but are not limited to, the following:
1. Grating Pacific, Inc.
2. Ohio Gratings, Inc.
3. Or approved equal.

PART 3 - EXECUTION

3.1 PREPARATION

A. Coordinate and furnish anchorages, setting drawings, diagrams, templates, instructions, and directions for installation of anchorages, including sleeves, anchor bolts, and miscellaneous items having integral anchors that are to be embedded in concrete or masonry construction. Coordinate delivery of such items to Project site.

3.2 INSTALLATION, GENERAL

A. Cutting, Fitting, and Placement: Perform cutting, drilling, and fitting required for installation. Set accurately in location, alignment, and elevation; with edges and surfaces level, plumb, true, and free of rack; and measured from established lines and levels.

B. Provide temporary bracing or anchors in formwork for items to be built into concrete, masonry, or similar construction.

C. Fit exposed connections accurately together to form hairline joints. Weld connections that are not to be left as exposed joints, but cannot be shop welded because of shipping size limitations. Do not weld, cut, or abrade the surfaces of exterior units that have been hot-dip galvanized after fabrication and are intended for bolted or screwed field connections.

D. Field Welding: Comply with the following requirements:
   1. Use materials and methods that minimize distortion and develop strength and corrosion resistance of base metals.
   2. Obtain fusion without undercut or overlap.
   3. Remove welding flux immediately.

E. Corrosion Protection: Coat concealed surfaces of aluminum that will come into contact with grout, concrete, masonry, wood, or dissimilar metals with a heavy coat of alkali-resistant bituminous paint.

3.3 INSTALLING METAL BAR GRATINGS

A. General: Install gratings to comply with recommendations of NAAMM grating standard referenced under Part 2 that apply to grating types and bar sizes indicated, including installation clearances and standard anchoring details.

B. Secure removable units to supporting members with type and size of clips and fasteners indicated, or, if not indicated, as recommended by grating manufacturer for type of installation conditions shown.

C. Secure nonremovable units to supporting members by welding where both materials are the same; otherwise, fasten by bolting as indicated above.

D. Attach toe plates to gratings by welding at locations indicated.

++ END OF SECTION ++

SECTION 05532

ALUMINUM CHECKERED PLATE

PART 1 - GENERAL

1.1 DESCRIPTION

A. Scope:
   1. Provide all labor, materials, equipment and incidentals as shown on the Drawings, specified and required to furnish aluminum checker plate.
   2. The Work also includes:
      a. Providing openings in grating to accommodate the Work under this and other Sections and attaching to the grating all items such as sleeves, bands, studs, fasteners and all items required for which provision is not specifically included under other Sections.

B. Coordination:
   1. Review installation procedures under other Sections and coordinate the Work that must be installed with or attached to the grating or checker plate.

1.2 QUALITY ASSURANCE

A. Reference Standards: Comply with applicable provisions and recommendations of the following, except as otherwise shown or specified.
   1. ASTM B 209, Specification for Aluminum and Aluminum - Alloy Sheet and Plate.
   2. ASTM B 210, Specification for Aluminum and Aluminum-Alloy Drawn Seamless Tubes.
   3. ASTM B 221, Specification for Aluminum and Aluminum-Alloy Extruded Bars, Rods, Wire, Shapes and Tubes.
   4. NAAMM, Metal Finishes Manual, and Metal Bar Grating Manual.
   5. Aluminum Association Standards.

B. Field Measurements:
   1. Take field measurements prior to preparation of Shop Drawings and fabrication, where required, to ensure proper fitting of the Work.

1.3 SUBMITTALS

A. Samples: Submit for approval the following:
   1. Representative samples of grating, appurtenances and other finished products requested by ENGINEER. ENGINEER'S review will be for type and finish only. Compliance with all other requirements is the exclusive responsibility of CONTRACTOR.

B. Shop Drawings: Submit for approval the following:
   1. Fabrication and erection of all Work. Include plans, elevations, and details of sections and connections. Show anchorage and accessory items.
   2. Setting drawings and templates for location and installation of anchorage devices.
   3. Manufacturer's specifications, load tables, dimension diagrams, anchor details and installation instructions.

C. Each Shop Drawing Submittal shall include a hard copy of the relevant Specification Section and shall be clearly marked to indicate whether the requirements for equipment and/or services in the Specification Section are met by writing "accept" or "deviate" next to each Paragraph. If clarifications are needed to any of the Paragraphs in the Specification Sections due to deviations, they shall be addressed next to the Paragraph as such and explained further with any additional information necessary. If any exceptions and/or deviations are proposed to any of the Specifications, they shall be clearly noted as such in the Submittal, and an explanation of any deviation and/or exception shall be provided. The CONTRACTOR shall furnish equipment and/or services as specified if an exception and/or deviation is rejected. Failure to include a copy of the marked-up specification sections, along with justification(s) for any requested deviations to the specification requirements, with the submittal shall be sufficient cause for rejection of the entire submittal with no further consideration.

PART 2 - PRODUCTS

2.1 PERFORMANCE CRITERIA

A. The manufacturer shall furnish grating conforming to the following criteria:
   1. Design Loads: Uniform live load or a concentrated load on any area 24-inches square, whichever gives the greatest stresses.

Live Load	Concentrated Load
300 psf	1500 lbs

   2. Maximum Clear Span Deflection: 1/120 of span or 1/4-inch, whichever is less, under 100 psf.
   3. Maximum Fiber Stress: 12,000 psi.
   4. Bearing bars shall be a maximum of 1-3/16 inches on center and 3/16-inches minimum thickness.
   5. Cross bars or bent connecting bars shall not exceed 7-inches on center.

B. The manufacturer shall furnish removable checkered plate or plank grating to conform to the following, unless otherwise shown on the Drawings:
   1. Aluminum Checkered Plate:
      a. Minimum thickness: 1/2-inch.

b. Design Uniform Load: 300 psf, unless otherwise shown on the Drawings.
c. Maximum clear span deflection: 1/120th of the span or 1/4-inch, whichever is less, under 100 psf.

2.2 MATERIALS

A. Bearing Bars: Alloy 6061-T6 or Alloy 6063-T6, conforming to ASTM B 221.

B. Cross Bars or Bent Connecting Bars: Alloy conforming to either ASTM B 221 or ASTM B 210.

C. Aluminum Checkered Plate:
1. Provide aluminum checkered plate as shown on the Drawings and specified. Plate to conform to ASTM B 209. Provide anodized finish.
2. Raised Pattern Floor Plate: Provide pattern standard with the manufacturer. Alloy and temper to be Alloy 6061-T6.

2.3 FABRICATION

A. Use materials of the minimum size and thickness as specified above unless otherwise shown on the Drawings. Work to the dimensions shown on approved Shop Drawings.

B. Type of Finish: Clear anodized with a minimum coating of 0.0008-inch in accordance with Aluminum Association Standard A41.

C. Weld stainless steel stud bolts to receive saddle clip or flange block anchors to supporting steel members. Drill for machine bolts when supports are aluminum.

D. Grind exposed joints smooth.

E. Provide checker plate attached to existing concrete, masonry or steel with aluminum bearing angles fastened with anchors as shown on the Drawings or otherwise approved by ENGINEER.

2.4 CHECKERED PLATES AND ALUMINUM PLANK GRATING

A. Provide removable checkered plates in the locations and sizes shown on the Drawings.

B. Each checkered plate shall be provided with lifting handles as recommended by the manufacturer. Maximum weight of checkered plate or plank section shall be 150 pounds.

C. Checkered plates shall have a checkered, nonslip surface.

D. The aluminum plates shall have an anodized finish. Protect finish with a factory-applied coating of lacquer standard with the manufacturer.

PART 3 - EXECUTION

3.1 INSTALLATION

A. Fastening to In-Place Construction:
   1. Use anchorage devices and fasteners to secure grating to supporting members or prepared openings, as recommended by the manufacturer.

B. Cutting, Fitting and Placement:
   1. Perform all cutting, drilling and fitting required for installation. Set the Work accurately in location, alignment and elevation, plumb, level, true and free of rack. Do not use wedges or shimming devices.

C. Protection of Aluminum from Dissimilar Materials: Coat all aluminum surfaces in contact with dissimilar materials such as concrete, masonry, steel and other metals as specified in Section 09900, Painting.

D. Removable aluminum checkered plate shall be fastened to secure supporting members, as recommended by the manufacturer. Fastening system for the checker plate or plank grating shall be removable.

++ END OF SECTION ++

SECTION 06100

ROUGH CARPENTRY

PART 1 - GENERAL

1.1 SUMMARY

A. Section includes: Carpentry normally not exposed to view, related metal items, and connectors.

B. Related sections:
   1. The Contract Documents are complementary; what is called for by one is as binding as if called for by all.
   2. It is the CONTRACTOR's responsibility for scheduling and coordinating the Work of subcontractors, suppliers, and other individuals or entities performing or furnishing any of CONTRACTOR's Work.
   3. The following Sections are related to the Work described in this Section. This list of Related Sections is provided for convenience only and is not intended to excuse or otherwise diminish the duty of the CONTRACTOR to see that the completed Work complies accurately with the Contract Documents.
      a. Division 05 - Metals.
      b. Division 06 – Woods and Plastics.

1.2 REFERENCES

A. American Society of Mechanical Engineers (ASME):
   1. B18.2.1 - Square and Hex Bolts and Screws.
   2. B18.6.1 - Wood Screws.

B. American Softwood Lumber Standard (ASLS):
   1. PS 20 -Softwood Lumber, Product Standard.

C. ASTM International (ASTM):
   1. D 226 - Standard Specification for Asphalt-Saturated Organic Felt Used in Roofing and Waterproofing.
   2. F 1667 - Standard Specification for Driven Fasteners: Nails, Spikes, and Staples.

D. California Redwood Association (CRA):
   1. Standard Specification for Grades of California Redwood Lumber.
   2. Redwood Inspection Service (RIS).

E. U.S. Department of Commerce (DOC):
   1. Voluntary Product Standard PS 1-07 - Structural Plywood.

F. West Coast Lumber Inspection Bureau (WCLIB):
   1. Standard No. 17 - Grading Rules for West Coast Lumber.

G. Western Wood Products Association (WWPA):
   1. Western Lumber Grading Rules.

1.3 SUBMITTALS

A. Shop Drawings: Submit for approval the following:
   1. A copy of this specification section, with addendum updates included, and all referenced and applicable sections, with addendum updates included, with each paragraph check-marked to indicate specification compliance or marked to indicate requested deviations from specification requirements. Check marks (✓) shall denote full compliance with a paragraph as a whole. If deviations from the specifications are indicated, and therefore requested by the CONTRACTOR, each deviation shall be underlined and denoted by a number in the margin to the right of the identified paragraph, referenced to a detailed written explanation of the reasons for requesting the deviation. The ENGINEER shall be the final authority for determining acceptability of requested deviations. The CONTRACTOR shall furnish equipment and/or services as specified if an exception and/or deviation is rejected. The remaining portions of the paragraph not underlined will signify compliance on the part of the CONTRACTOR with the specifications. Failure to include a copy of the marked-up specification sections, along with justification(s) for any requested deviations to the specification requirements, with the submittal shall be sufficient cause for rejection of the entire submittal with no further consideration.
   2. The CONTRACTOR shall submit the preventive maintenance information package as part of the shop drawing submittal package to the ENGINEER for review and approval. Shop drawing submittal package will not be approved without acceptance of preventive maintenance information.

1.4 QUALITY ASSURANCE

A. Grade lumber in accordance with following:
   1. Douglas Fir and Larch Lumber:
      a. WCLIB Grading Rules.
      b. WWPA Grading Rules.
      c. ASLS PS 20.
   2. Redwood Lumber: CRA and RIS grading rules.

B. Stamp each piece of lumber with grade, species, and size.

C. Identify each panel of softwood plywood with appropriate APA grade-trademark. Plywood shall meet requirements DOC PS 1-07.

D. Grade lumber 2 inches, 3 inches, and 4 inches thick in accordance with ASLS PS 20. Identify with grade name and species only without reference to paragraph numbers.

E. Grade lumber 6 inches and larger under provisions of WWPA. Identify with grade, species, and size. Equivalent members graded by WCLIB will be accepted unless specifically excluded.

1.5 DELIVERY, STORAGE, AND HANDLING

A. Cover products for protection from damage and moisture.

B. Stack lumber to permit good air drying. Position separators at each layer and between soil and first layer.

PART 2 - PRODUCTS

2.1 WOOD

A. Minimum lumber grade requirements for framing and sheathing:

Classification	Nominal Size	Species and Minimum Grade
Studs	2 by 3, 2 by 4	DF-L Number 2 or construction
	2 by 6, 2 by 8	DF-L Number 2
Roof Joists	2 by 6 through 2 by 14	DF-L Number 2
Floor Joists and Planking	2 by 6 through 2 by 14	DF-L Number 2
Headers, Beams, and Stringers	4 by 4 through 4 by 14	DF-L Number 1
	6 by 6 through 6 by 14	DF-L Number 1 (WWPA 70-11)
Posts and Timbers	6 by 6 and larger	DF-L Number 1
Boards	1 by	DF-L Construction
Framing Lumber	All sizes	DF-L Number 2
Blocking and Bridging	2 by 3 through 2 by 14	DF-L Number 3
Miscellaneous	All sizes	DF-L Number 2
DF-L = Douglas Fir - Larch (North) Grouping		

B. Species shall be as specified, or any combination of species allowed by grading rules.

C. Lumber 4 inches thick and less: Seasoned or kiln-dried with maximum 19 percent moisture.

D. Lumber thicker than 4 inches: Seasoned to minimize warping and twisting.

E. Lumber surfaces: Surfaced four sides (S4S), unless otherwise specified or indicated on the Drawings.

F. Lumber shall be free of bow, warp, or twist. Pieces with serious defects will be discarded regardless of grading.

G. Sills, cants, and nailers for fascia for roofing: Preservative pressure-treated Number 2 or better Douglas Fir.

H. Roof nailers: Use preservative pressure-treated Number 2 or better Douglas Fir nailers for gravel stops at edges of roof and at roof expansion joints. Match thickness of nailers and roof insulation.

I. Redwood:

J. Redwood for baffles and stop logs: Select Heart.

K. Wood in contact with concrete or masonry: Pressure treated as specified in Division 06.

2.2 PLYWOOD

A. Plywood:
   1. DOC PS 1-07 for softwood plywood.

B. Plywood with edges or surfaces permanently exposed to weather: Exterior type with exterior type glue, Grade A-C.

C. Plywood roof sheathing: Exterior type with exterior type glue, of thickness and grade as indicated on the Drawings.

D. Plywood sheathing exposed at overhangs: Exterior type plywood with exterior type glue, Grade A-C or better.

E. Miscellaneous plywood: Exterior type plywood of thickness indicated on the Drawings, Grade A-C, or as otherwise indicated on the Drawings.

F. Plywood for roof diaphragms and shear walls: As indicated on the Drawings.

2.3 ROUGH HARDWARE

A. Fasteners:
   1. Nails: ASTM F 1667 common wire nails or spikes with full head.

2. Bolts, nuts, and studs: ASME B18.2.1, hot-dip galvanized.
3. Washers: Hot-dip galvanized square or round steel plate washers, or malleable iron washers with following dimensions:
    a. Hot-dip galvanized square steel washers:

Bolt Diameter	Washer Dimensions
1/2 inch	2-1/2 by 2-1/2 by 1/4 inches
5/8 inch	2-1/2 by 2-1/2 by 1/4 inches
3/4 inch	2-3/4 by 2-3/4 by 5/16 inches
7/8 inch	3-1/4 by 3-1/4 by 5/16 inches
1 inch	3-3/4 by 3-3/4 by 3/8 inches

    b. Hot-dip galvanized round steel washers:

Bolt Diameter	Washer Dimensions
1/2 inch	2-1/2 inch diameter by 1/4 inch
5/8 inch	2-3/4 inch diameter by 1/4 inch
3/4 inch	3 inch diameter by 5/16 inch
7/8 inch	3-1/2 inch diameter by 3/8 inch
1 inch	4 inch diameter by 7/16 inch

    c. Round malleable iron washers:

Bolt Diameter	Washer Dimensions
1/2 inch	2-1/2 inch diameter by 1/4 inch
5/8 inch	2-3/4 inch diameter by 5/16 inch
3/4 inch	3 inch diameter by 7/16 inch
7/8 inch	3-1/2 inch diameter by 7/16 inch
1 inch	4 inch diameter by 1/2 inch

4. Lag screws: ASME B18.2.1, hot-dip galvanized.
5. Wood screws: ASME B18.6.1.
6. Nails, screws, bolts, plates, and other fasteners exposed to weather or on building exteriors shall be hot-dip galvanized or of Series 300 stainless steel.
7. Anchor bolts, concrete anchors, flush shells, and powder actuated fasteners: As specified in Division 05.
8. Sheet metal connectors:
    a. Manufacturers: One of the following or equal:
        1) Simpson Strong-Tie Company, Inc.
        2) USP Structural Connectors.

b. Material: Sheet steel, hot-dip galvanized after fabrication.
c. Model numbers: As indicated on the Drawings.
d. Nails, typical: Common, hot-dip galvanized.
e. Nails, joist hanger: Special, hot-dip galvanized, providing full building code, lateral load resistance values for common nails.

B. Miscellaneous hardware:
1. Clamps, expansion screws, anchors, and plates: Standard products of established manufacturers of proper size and strength to adequately fasten, support, and maintain members in place.
2. Hardware exposed to weather or on building exteriors: Hot-dip galvanized.

C. Building paper: ASTM D 226; unperforated; No. 15 unless otherwise indicated.

PART 3 - EXECUTION

3.1 EXAMINATION

A. Verify that conditions are satisfactory for installation of products as specified.

3.2 GENERAL

A. Notch, cope, and miter meeting members so meeting members have full bearing without overcutting or undercutting.

B. Accurately cut, fit, and frame lumber.

3.3 SILLS AND PLATES

A. Install 2 layers of building paper under sills and members fasten to concrete or masonry.

B. Secure sills to foundation as indicated on the Drawings. When not indicated on the Drawings, anchor sills with 1/2-inch diameter hot-dip galvanized anchor bolts at 4-foot centers and within a minimum of 6 inches from each end of each member.

C. Set plates on top of masonry and concrete walls level and in same plane.

D. Anchor plates to masonry or concrete with anchor bolts of size and spacing indicated on the Drawings. Install anchor bolt within 6 inches of member ends.

E. Use cement grout, when necessary, to assure full bedding and leveling of plates.

3.4 WALLS

A. Erect walls plumb and true to line.

B. Frame walls and partitions with studs of sizes and spacing indicated on the Drawings and at not greater than 16 inches on center.

C. Provide double studs at openings and triple studs at corners.

D. Provide double plates at top of wall studs, arranging to form continuous horizontal ties. Splice individual plates and stagger ends of double plates.

E. Provide two 2-by-6 lintels for openings up to 48 inches and two 2-by-8 lintels for openings from 48 inches to 72 inches.

F. Frame openings for large pipes and ducts and for receiving recessed Work in partitions without cutting structural members.

G. Place nailing blocks and backing necessary for attachment of ground, trim, fixtures, and miscellaneous items. Cut, fur, and install backing required for plumbing and heating pipes, fixtures, and electrical work.

H. Provide fire retardant pressure-treated wood within metal-framed partitions and furring.

I. Provide blocking for attaching paneling, trim, and similar items to framing.

J. Do not cut wood beams or joists and plates in bearing walls for passage of pipes.

K. Coordinate requirements for sleepers for mechanical equipment and curb openings with work of other Sections for locations and sizes.

L. Firestopping:
   1. Where required by governing codes, install continuous row of fire stop blocking in stud walls and partitions at ceilings and floor levels and at maximum 10 feet spacing. Form complete and effective separation for entire width of wall or partition.
   2. Use fire stop blocking with minimum 2 inches nominal thickness and same width as studs.
   3. Fill openings in firestops with other firestopping materials specified.

3.5 ROUGH HARDWARE

A. Provide nailing as indicated on the Drawings or in accordance with Fastening Schedule specified in building code, as specified in Section 01410, whichever is more stringent. Do not use box and sinker nails.

B. Install bolts and other fastenings as indicated on the Drawings or in accordance with building code, whichever is more stringent.

C. Prebore nail holes where required to avoid splitting of wood members. Remove and replace split pieces.

D. Prebore holes for screws and lag screws, then screw into place. When wood screws and lag screws are defective because they have been driven into place with hammer, replace wood members involved with new members.

E. Drill holes for bolts 1/32-inch larger than bolt shank unless otherwise indicated on the Drawings.

F. Perform final bolting after structural members have been properly aligned.

G. Place washers under heads of bolts and nuts and heads of lag screws bearing on wood. Align exposed bolts.

H. Power nailing will be permitted where nails are as specified and provided installation does not mar or damage wood members. Nails shall have full head. Do not overdrive nails.

I. Drive nail heads for plywood diaphragms flush with plywood surface. Where nails have been overdriven in plywood panel, remove and replace plywood, nails, and damaged supporting members.

J. Use common nails unless otherwise indicated on the Drawings.

++ END OF SECTION ++

SECTION 06600

FIBERGLASS FABRICATIONS

PART 1 - GENERAL

1.1 SUMMARY

A. CONTRACTOR shall provide all labor, materials, equipment, and incidentals as shown, specified, and required to furnish and install fiberglass fabrications as indicated on the Drawings and as specified herein.
   1. The CONTRACTOR shall provide all items such as fasteners, supports, embedded angles, and other items required for a complete and useable system.
   2. FRP grating with a covered plate high traction walking surface shall be installed in the Grit Inlet and Outlet areas at both Grit Concentrators to extents shown on the Contract Drawings. FRP grating and walking surface in these areas shall take into account piping and gates in the area for openings.
   3. Stop plates for the Grit Inlet and Outlet channels as shown on the Contract Drawings.

1.2 SECTION INCLUDES

A. Grating.

B. Stop Plates.

C. Miscellaneous items.

1.3 RELATED SECTIONS

A. Section 01300, Submittals.

B. Section 05500, Metal Fabrications.

1.4 REFERENCES

A. ASTM E84, Test Method for Surface Burning Characteristics of Building Materials.

B. ASTM D638, Test Method for Tensile Property of Plastic.

C. ASTM C582, Specifications for Self Supporting Corrosion Resistant Structures.

D. ASTM D790, Test Method for Flexural Properties of Unreinforced and Reinforced Plastics and Electrical Insulating Materials.

E. ASTM Test Methods D638, D790, D2583, and D570.

F. ANSI/AWWA F101, Contact-Molded, Fiberglass-Reinforced Plastic Washwater Troughs and Launders.

G. ANSI/AWWA F102, Matched-Die-Molded, Fiberglass-Reinforced Plastic Weir Plates Scum Baffles and Mounting Brackets.

H. ANSI/NSF-61 Standard.

1.5 QUALITY ASSURANCE

A. Reference Standards: Comply with applicable provisions and recommendations of the following, except as otherwise shown or specified.
   1. Standards of the Reinforced Plastic/Composites Institute.
   2. National Bureau of Standards, PS 15-96.
   3. Uniform Building Code.
   4. OSHA.

B. The CONTRACTOR shall be responsible for taking accurate field measurements prior to preparation of Shop Drawings and fabrication of all FRP fabrications to ensure proper fitting of the Work.

C. FRP grating shall be fabricated and installed such that the height of the covered FRP grating is flush with the concrete structure. The covered FRP grating shall match the concrete deck elevation.

1.6 SUBMITTALS

A. Descriptive submittals shall be made in accordance with the Data Reference Symbols defined in Section 01300, Submittals.
   1. Fiberglass Fabrications Shop Drawings:
      a. Letters of Certification of Compliance on materials, equipment, etc.
      b. Samples.
      c. Final Certified Drawings showing outline dimensions, foundation layout or mounting information, and other pertinent dimensions sealed by a Professional Engineer registered in the State of Arizona.
      d. Deflection calculations signed and sealed by a Professional Engineer registered in the State of Arizona.
      e. Field erection instructions, assembly drawings and/or diagrams, detailed reference drawing lists, lists of erection details, and list of spare parts supplied with equipment.
      f. Shop Detail Drawings showing individual sub- assemblies and fabricated pieces with material specifications and other applicable data.
      g. Installation instructions, operating and/or service manuals, and all other data pertinent to operating or servicing the complete apparatus.
      h. Preventative maintenance instructions and recommended frequency.

i. Materials of construction of all components.

B. Samples: Submit for approval the following:
   1. Representative samples of grating, fasteners, and other finished products related to FRP. Submit standard color samples for ENGINEER selection. ENGINEER review will be for type, color, and finish. Compliance with all other requirements is the exclusive responsibility of the CONTRACTOR.
   2. Representative samples of covered FRP plate that will be bonded to the FRP grating. Submit standard color samples of FRP plate for ENGINEER selection prior to fabrication. Submit three different grit surfaces, coarse grit (14 to 25 mesh gradation), standard grit (35 to 50 mesh gradation), and fine grit (70 to 100 mesh gradation). The representative sample shall be 6-inches square. The final selection will be made from the above three types of finishes. The sample shall represent the color and grit surface being supplied. The ENGINEER shall select the color and grit surface to be supplied prior to fabrication. CONTRACTOR is responsible for submitting samples prior to fabrication. CONTRACTOR will be held liable for replacing FRP grating if color and grid selection was not submitted prior to fabrication to the ENGINEER.

C. Shop Drawings: Submit for approval the following:
   1. Shop Drawings detailing fabrication and erection of gratings and other finished products related to FRP. Include plans, sections, height of FRP grating, and details of connections. Show anchorage, supports, embeds, and accessory items. Provide templates for anchors and bolts specified for installation under other Sections. Submit grating support design to the ENGINEER for approval prior to installation. Install supports after the ENGINEER has approved the grating support design.
   2. Manufacturer’s specifications, load tables, dimension diagrams, anchor details, and installation instructions.

D. All FRP fabrication work shall not be permitted until CONTRACTOR submits field measurements of the openings and until the manufacturer's drawings, based upon CONTRACTOR'S measurements and representative sample selection have been approved by the ENGINEER.

E. Each Shop Drawing Submittal shall include a hard copy of the relevant Specification Section and shall be clearly marked to indicate whether the requirements for equipment and/or services in the Specification Section are met by writing "accept" or "deviate" next to each Paragraph. If clarifications are needed to any of the Paragraphs in the Specification Sections due to deviations, they shall be addressed next to the Paragraph as such and explained further with any additional information necessary. If any exceptions and/or deviations are proposed to any of the Specifications, they shall be clearly noted as such in the Submittal, and an explanation of any deviation and/or exception shall be provided. The CONTRACTOR shall furnish equipment and/or services as specified if an exception and/or deviation is rejected. Failure to include a copy of the marked-up

specification sections, along with justification(s) for any requested deviations to the specification requirements, with the submittal shall be sufficient cause for rejection of the entire submittal with no further consideration.

PART 2 - PRODUCTS

2.1 MANUFACTURERS

A. Acceptable Manufacturers:
   1. Plasti-fab, Inc., of Tualatin, OR.
   2. Warminster Fiberglass Company, Southampton, PA.
   3. Fiberglass Fabricators, Inc., Smithfield, RI.
   4. Delta Fiberglass Structures, Inc., Salt Lake City, UT.
   5. Strongwell, Chatfield, MN.
   6. Composite Structures International, Inc., Dallas, TX.

B. The naming of a manufacturer in this Specification is not an indication that the manufacturer's standard equipment is acceptable in lieu of the specified component features. Naming is only an indication that the manufacturer may have the capability of engineering and supplying a system as specified.

2.2 MATERIALS

A. General:
   1. Materials used in the manufacture of this equipment shall be new and of the best quality used for the purpose of commercial production.
   2. Fiberglass used in construction of grates, weirs, plates, and FRP air vent pipes shall be a fiberglass reinforced polyester resin laminate consisting of not less than 30% fiberglass reinforcement and approximately 70% resin.
   3. All fiberglass shall contain an ultraviolet absorber to protect the resin from ultraviolet degradation.
   4. All weirs shall be match die molded. Weirs shall be integral blue-green color.
   5. Minimum physical properties shall be as follows (ASTM):
      a. Tensile Strength: 7,500 psi.
      b. Flexural Strength: 16,000 psi.
      c. Coefficient of Thermal Expansion (ave): 16x10-6 in/in per °F.
      d. Water Absorption: 0.20% in 24 hours.

2.3 FIBERGLASS GRATING

A. The grating shall be I-bearing bars spaced at 1-inch on center with 0.4-inch openings removable grating with a covered plate high traction walking surface, as specified herein.

B. The top surface of all panels shall have a fiberglass gritted plate bonded over the entire "I" beam surface of the grating and be composed of EXTREN pultruded

fiberglass with an epoxy coated anti-skid grit surface. The silica mesh gradation grit surface shall be selected by the ENGINEER.

C. The color and grit mesh shall be selected by the ENGINEER during the Shop Drawing submittal. CONTRACTOR shall submit standard color samples and grit mesh samples as indicated in Paragraph 1.6.B.

D. Maximum width of FRP grating shall be 5 feet. Individual removable sections of grating shall be installed in sizes that shall not exceed 55 lbs per section.

E. Minimum Thickness for FRP Grating:
   1. 1.25-inches for spans 36-inches or less.
   2. 1.5-inches for spans greater than 36-inches, but not more than 48-inches.
   3. 2-inches for spans up to 60-inches.

F. Fire Resistance: Resin shall be fire retardant vinyl ester meeting the requirements of Class 1 rating of 25 of less per ASTM E84 and meets the self extinguishing requirements of ASTM D635.

G. Provide opening for each section of FRP grating as shown on the Drawings.

H. Maximum Allowable Deflection of Clear Span: 1/200 of span length under uniform live load equal to 200 psf.

I. Ultimate Load: 400 psf minimum.

J. Manufacturer shall provide FRP grating support beams to meet the specified span length, deflection, live load, ultimate load, and grating thickness, in addition to other requirements specified herein.

K. Hold down clamps shall be Type 316L stainless steel insert hold downs as provided by Strongwell-Chatfield Division, or approved equal. A minimum of four each per panel.

L. All bearing bars that are to be exposed to UV shall be coated with polyurethane coating of a minimum thickness of 1 mil.

M. The grit panel shall be epoxy bonded over the entire "I" beam surfaces of the grating and a non-skid grit shall be affixed to the top surface of the assembly by epoxy resin, followed by a top coat of epoxy resin.

N. Grating shall be DURAGRID7 I-4000, as manufactured by Strongwell-Chatfiled Division, Chatfield, MN, Safe-T-Span by Composite Structures International, or approved equal.

2.4 FASTENERS

A. Provide fasteners of stainless steel 316 or fiberglass warranted by the manufacturer to be non-corrosive compatible with fiberglass grating and other components.

2.5 GRATING SUPPORT COLUMNS AND BEAMS

A. Grating support design shall be designed to support the live loads and spans specified above and submitted to the ENGINEER for review. Installation shall not occur until after the review has been approved by the ENGINEER.

B. All supports and related hardware shall be provided by the grating manufacturer.

C. The design of the supports for the gratings shall be such that they shall not interfere with processes, become wetted by liquids being processed or flowing beneath the gratings, or interfere with the weather protective coatings. Anchor bolts shall not penetrate protective coatings, concrete liner materials, or interfere with processing components.

2.6 FRP STOP PLATES AND GUIDES

A. The CONTRACTOR shall furnish and install stop plates and guides of FRP, located and sized as specified herein and shown on the Contract Documents. The FRP shall be isophthalic polyester and molded of green FRP and both sides of the plate shall be faced with a 10 mil c-veil and finished smooth with a rich layer of ultraviolet inhibited resin. Deflection is to be limited to not more than 1/360 of the plate width at a maximum operating head of 6 feet. The FRP shall have a sandwich center core having high density polyurethane closed cell foam for high rigidity, high strength, and water resistant integrity. The handle on the gate shall be extended for ease of removal of the plate.

B. Materials:
   1. Resin: The resin shall be a commercial grade, general purpose vinyl ester thermosetting resin, which has either been evaluated in a laminate, or which has been determined by a previous documented service to be acceptable for the service conditions. Contact the factory for specific chemical resistant applications.
   2. The resin shall contain no fillers except as follows:
      a. A thixotropic agent which does not interfere with laminate quality, or with the required chemical resistance of the laminate, may be added for viscosity control.
      b. Resin may contain pigments, dyes or colorants which have been determined by at least five years previous service to be acceptable for the service condition without fading or chalking from original color standard.
   3. Ultraviolet Resistance: All laminates have ultraviolet resistance in the form of pigmentation or ultraviolet absorbers.

4. Metal Reinforcement: When metal reinforcements are used, they shall be free of rust, oil and any foreign matter. They shall be completely encapsulated with a minimum of 1/8-inch thick laminate.
5. Glass Reinforcement: Glass reinforcements shall consist of chemically bonded surfacing mat and chopped strand or chopped strand mat as hereinafter described. Surfacing mat shall be type C, 10-20 mils thick, with a silane finish and a styrene-soluble binder. Chopped strands shall be Type E glass, with silane finish and styrene-soluble binder. The glass content of the finished laminate shall be adequate to produce mechanical and physical properties conforming to Table 1.
6. The troughs shall be ANSI/NSF-61 Certified.
7. 1-inch diameter ABS spreaders shall be bolted between the trough walls on approximate 2 feet maximum for the washwater troughs and 3 feet maximum for the overflow trough to enhance the structural rigidity of the trough system.
8. All trough mounting brackets, hardware, and stabilizers shall be Type 18-8 stainless steel and shall be supplied by the trough manufacturer.
9. Mechanical and physical properties shall conform to those of Table 1 and according to ANSI-AWWA specification F101 Table 4 - Minimum Physical Properties of Laminates.

TABLE 1

LAMINATE MECHANICAL AND PHYSICAL PROPERTIES 73EF

	ASTM Test Method	**For 12-inches wall Thickness**
Ultimate Tensile Strength PSI x 103 (Kg/cm2) min	D638	12 (844)
Flexural Strength PSI x 103 (Kg/cm2) min	D790	19 (1336)
Flexural Modulus Of Elasticity PSI x 106 (Kg/cm2) min	D790	0.9 (63.3 x 103)
Barcol Hardness (min)	D2583	35
Water Absorption - % (max.)	D570	0.2

C. Manufacturing Requirements:
   1. The inner surface of the trough shall be smooth and resin rich. The outer surface shall be reasonably smooth and no glass fibers shall be exposed. The size and number of air bubbles shall be held to a minimum. Laminations shall be dense and without voids, dry spots, cracks, or crazes.
   2. The inner surface of the trough shall be reinforced with glass surfacing mat. This shall be followed with chopped strand glass laminate (max. 2 oz. per sq. ft.) in a minimum of two layers. Void content of the complete laminate shall not exceed 2.5% of laminate volume.
   3. The top edges of the trough shall be level and parallel with a tolerance of + or -1/8-inch (measured when the trough is not loaded). The length of a trough section shall have a tolerance of ±1/8-inch per 10 feet length. The laminate thickness tolerance shall be plus 1/8-inch -0.
   4. Thickness at locations of supports such as saddles shall be at least 1.5 times the nominal thickness of the trough and shall conform to the fiber stress limitations set forth in the design section of the specification.
   5. End flanges and blind ends shall be a minimum of 1.5 times the nominal thickness of the trough and shall conform to the fiber stress limitations set forth in the design section of this Specification.
   6. An integrally molded water stop shall be provided on the trough whenever the trough is grouted into and/or passes through a wall.
   7. Troughs shall be installed so that the trough weir edges are level to within ± 1/8-inch.

2.7 FABRICATION

A. General: Form from materials of size, thickness, and shapes indicated, but not less than that needed to comply with performance requirements indicated. Work to dimensions indicated or accepted on Shop Drawings, using proven details of fabrication and support.
   1. Shear and punch cleanly and accurately.
   2. Remove sharp or rough areas on exposed traffic surfaces.
   3. Ease exposed edges to a radius of approximately 1/32-inch, unless otherwise indicated.

B. The gratings shall be constructed by the pultrusion method and provided with a non-slip surface.

C. Provide for anchorage of type indicated; coordinate with supporting structure. Fabricate and space anchoring devices to secure gratings, frames, and supports rigidly in place and to support indicated loads.

D. Shop Assembly: Preassemble items in shop to greatest extent possible to minimize field splicing and assembly. Disassemble units only as necessary for shipping and

handling limitations. Use connections that maintain structural value of joined pieces. Clearly mark units for reassembly and coordinated installation.

E. Fabricate cutouts in grating sections for penetrations indicated on Drawings. Arrange cutouts to permit grating removal without disturbing items penetrating gratings.
   1. Do not notch bearing bars at supports to maintain elevation.

F. All cut fiberglass grating must be sealed with a resin of the same construction as the grating itself.

2.8 SHOP FINISHING

A. Fiberglass fabrication shall be factory cut, drilled and sealed to the required dimensions.

2.9 SPARE PARTS

A. Fiberglass manufacturers shall supply cut surface seal kits for incidental repair of nicks, gouges, cuts, etc. Sufficient resin to cover a minimum of 25 square feet of surface area shall be supplied by the flight manufacturer. Resin provided shall be compatible with the resin matrix used in the fiberglass fabrication.

2.10 MISCELLANEOUS ITEMS

A. All other fiberglass items which are not listed above shall meet the requirements of Paragraph 2.2 of this Specification.

PART 3 - EXECUTION

3.1 PREPARATION

A. Repair of all incidental nicks, gouges, cuts and other surface deformations shall be repaired prior to installation as per manufacturer's recommendations.

B. Coordinate and furnish anchorages, setting drawings, diagrams, templates, instructions, and directions for installation of anchorages, including sleeves, anchor bolts, and miscellaneous items having integral anchors that are to be embedded in concrete or masonry construction. Coordinate delivery of such items to Project site.

3.2 INSTALLATION

A. Installation procedures shall be in accordance with manufacturer's recommendations.

B. The CONTRACTOR will not install fiberglass fabrications which have been damaged. Special care shall be taken to avoid over stressing fabrications during installation.

C. Fastening to In-Place Construction: Provide Type 316 stainless steel anchorage devices and fasteners to secure grating to supporting members or prepared openings, as recommended by the manufacturer.

D. Cutting, Fitting, Placing:
   1. Perform all cutting, drilling, and fitting required for installation. Set the Work accurately in location, alignment and elevation, plumb, level, true, and free of rack. Do no use wedges or shimming devices.
   2. Make cutouts or openings in the field as approved by ENGINEER.
   3. All grating which requires cutting during installation shall have the effected surfaces sealed with catalyzed resin sealant of equal or superior corrosion resistance to the grating as recommended by the manufacturer.
   4. All troughs which requires cutting during installation shall have the effected surfaces sealed as recommended by the manufacturer.
   5. Secure grating to fiberglass structural members as specified by the manufacturer.
   6. Fit exposed connections accurately together to form tight joints.
   7. Secure edges of grating to each other with end panel clips.
   8. Secure clips to grating with Type 316 stainless steel Hastelloy-C bolts such that the grating shall act as a unit. Place bolts not more than 3-inches from each plate section end and not more than 24-inches on center.

3.3 INTERFACE WITH OTHER PRODUCTS

A. Fiberglass fabrications shall interface with the system equipment as required for proper operation of the equipment as recommended by the equipment manufacturer. Stainless steel anchor bolts, nuts and washers shall be provided as required by the manufacturer or as shown on the Drawings.

++ END OF SECTION ++

SECTION 07900

JOINT SEALERS

PART 1 - GENERAL

1.1 SECTION INCLUDES

A. Sealants and joint backing.

1.2 REFERENCE STANDARDS

A. ASTM C834 - Standard Specification for Latex Sealants; 2014.

B. ASTM C920 - Standard Specification for Elastomeric Joint Sealants; 2014a.

C. ASTM C1193 - Standard Guide for Use of Joint Sealants; 2016.

D. ASTM D2240 - Standard Test Method for Rubber Property--Durometer Hardness; 2015.

1.3 ADMINISTRATIVE REQUIREMENTS

A. Coordinate the work with other sections referencing this section.

1.4 SUBMITTALS

A. Product Data: Provide data indicating sealant chemical characteristics, performance criteria, substrate preparation, and limitations.

1.5 FIELD CONDITIONS

A. Maintain temperature and humidity recommended by the sealant manufacturer during and after installation.

1.6 WARRANTY

A. Correct defective work within a five year period after Date of Substantial Completion.

B. Warranty: Include coverage for installed sealants and accessories which fail to achieve airtight seal, exhibit loss of adhesion or cohesion, or do not cure.

PART 2 - PRODUCTS

2.1 SEALANTS

A. General Purpose Exterior Sealant: Polyurethane; ASTM C920, Grade NS, Class 25, Uses M, G, and A; single component.
   1. Color: Match adjacent finished surfaces.
   2. Applications: Use for:
      a. Control, expansion, and soft joints in masonry.
      b. Joints between concrete and other materials.
      c. Joints between metal frames and other materials.
      d. Other exterior joints for which no other sealant is indicated.

B. Exterior Metal Lap Joint Sealant: Butyl or polyisobutylene, nondrying, nonskinning, noncuring.
   1. Applications: Use for:
      a. Concealed sealant bead in sheet metal work.
      b. Concealed sealant bead in siding overlaps.

C. Epoxy Concrete Floor Joint Filler: Self-leveling, pourable, semi-rigid sealant intended for filling cracks and control joints not subject to significant movement; rigid enough to support concrete edges under traffic.
   1. Composition: Single or multi-part,100 percent solids by weight.
   2. Hardness: 85, minimum, after 7 days, when tested in accordance with ASTM D2240, Shore A.
   3. Color: Concrete gray.
   4. Joint Width, Minimum: 1/8 inch (3 mm).
   5. Applications: Use for:
      a. Control joints in concrete slabs and floors not filled with filler placed in form.
      b. Construction joints in concrete slabs and floors.

2.2 ACCESSORIES

A. Primer: Non-staining type, recommended by sealant manufacturer to suit application.

B. Joint Cleaner: Non-corrosive and non-staining type, recommended by sealant manufacturer; compatible with joint forming materials.

C. Joint Backing: Round foam rod compatible with sealant; ASTM D 1667, closed cell PVC; oversized 30 to 50 percent larger than joint width.

D. Bond Breaker: Pressure sensitive tape recommended by sealant manufacturer to suit application.

PART 3 - EXECUTION

3.1 EXAMINATION

A. Verify that substrate surfaces are ready to receive work.

B. Verify that joint backing and release tapes are compatible with sealant.

3.2 PREPARATION

A. Remove loose materials and foreign matter that could impair adhesion of sealant.

B. Clean and prime joints in accordance with manufacturer's instructions.

C. Perform preparation in accordance with manufacturer's instructions and ASTM C1193.

D. Protect elements surrounding the work of this section from damage or disfigurement.

3.3 INSTALLATION

A. Perform work in accordance with sealant manufacturer's requirements for preparation of surfaces and material installation instructions.

B. Perform installation in accordance with ASTM C1193.

C. Measure joint dimensions and size joint backers to achieve width-to-depth ratio, neck dimension, and surface bond area as recommended by manufacturer, except where specific dimensions are indicated.

D. Install bond breaker where joint backing is not used.

E. Install sealant free of air pockets, foreign embedded matter, ridges, and sags.

F. Apply sealant within recommended application temperature ranges. Consult manufacturer when sealant cannot be applied within these temperature ranges.

G. Tool joints concave.

H. Concrete Floor Joint Filler: Install concrete floor joint filler per manufacturer's written instructions. After floor joint filler is fully cured, shave joint filler flush with top of concrete slab.

3.4 CLEANING

A. Clean adjacent soiled surfaces.

3.5 PROTECTION

A. Protect sealants until cured.

++ END OF SECTION ++

SECTION 08110

STEEL DOORS AND FRAMES

PART 1 - GENERAL

1.1 SECTION INCLUDES

A. Non-fire-rated hollow metal doors and frames.

B. Thermally insulated hollow metal doors with frames.

1.2 REFERENCE STANDARDS

A. ADA Standards - Americans with Disabilities Act (ADA) Standards for Accessible Design; 2010.

B. ANSI/SDI A250.4 - Test Procedure and Acceptance Criteria for Physical Endurance for Steel Doors, Frames and Frame Anchors; 2011.

C. ANSI/SDI A250.8 - Specifications for Standard Steel Doors and Frames (SDI-100); 2017.

D. ANSI/SDI A250.10 - Test Procedure and Acceptance Criteria for Prime Painted Steel Surfaces for Steel Doors and Frames; 2011.

E. ASTM A653/A653M - Standard Specification for Steel Sheet, Zinc-Coated (Galvanized) or Zinc-Iron Alloy-Coated (Galvannealed) by the Hot-Dip Process; 2015.

F. ASTM A1008/A1008M - Standard Specification for Steel, Sheet, Cold-Rolled, Carbon, Structural, High-Strength Low-Alloy, High-Strength Low-Alloy with Improved Formability, Solution Hardened, and Bake Hardenable; 2016.

G. ASTM A1011/A1011M - Standard Specification for Steel, Sheet and Strip, Hot-Rolled, Carbon, Structural, High-Strength Low-Alloy, High-Strength Low-Alloy with Improved Formability, and Ultra-High Strength; 2015.

H. ASTM E84 - Standard Test Method for Surface Burning Characteristics of Building Materials; 2016.

I. BHMA A156.115 - American National Standard for Hardware Preparation in Steel Doors and Steel Frames; 2014.

J. ICC A117.1 - Accessible and Usable Buildings and Facilities; 2009.

K. NAAMM HMMA 830 - Hardware Selection for Hollow Metal Doors and Frames; 2002.

L. NAAMM HMMA 831 - Hardware Locations for Hollow Metal Doors and Frames; 2011.

M. NAAMM HMMA 840 - Guide Specifications for Installation and Storage of Hollow Metal Doors and Frames; 2007.

1.3 SUBMITTALS

A. Product Data: Materials and details of design and construction, hardware locations, reinforcement type and locations, anchorage and fastening methods, and finishes; and one copy of referenced standards/guidelines.

B. Shop Drawings: Details of each opening, showing elevations, glazing, frame profiles, and any indicated finish requirements.

C. Shop Drawings: Submit for approval the following:
   1. A copy of this specification section, with addendum updates included, and all referenced and applicable sections, with addendum updates included, with each paragraph check-marked to indicate specification compliance or marked to indicate requested deviations from specification requirements. Check marks (□) shall denote full compliance with a paragraph as a whole. If deviations from the specifications are indicated, and therefore requested by the CONTRACTOR, each deviation shall be underlined and denoted by a number in the margin to the right of the identified paragraph, referenced to a detailed written explanation of the reasons for requesting the deviation. The ENGINEER shall be the final authority for determining acceptability of requested deviations. The CONTRACTOR shall furnish equipment and/or services as specified if an exception and/or deviation is rejected. The remaining portions of the paragraph not underlined will signify compliance on the part of the CONTRACTOR with the specifications. Failure to include a copy of the marked-up specification sections, along with justification(s) for any requested deviations to the specification requirements, with the submittal shall be sufficient cause for rejection of the entire submittal with no further consideration.
   2. The CONTRACTOR shall submit the preventive maintenance information package as part of the shop drawing submittal package to the ENGINEER for review and approval. **SHOP DRAWING SUBMITTAL PACKAGE WILL NOT BE APPROVED WITHOUT ACCEPTANCE OF PREVENTIVE MAINTENANCE INFORMATION.**

1.4 DELIVERY, STORAGE, AND HANDLING

A. Comply with NAAMM HMMA 840 or ANSI/SDI A250.8 (SDI-100) in accordance with specified requirements.

B. Protect with resilient packaging; avoid humidity build-up under coverings; prevent corrosion and adverse effects on factory applied painted finish.

PART 2 - PRODUCTS

2.1 MANUFACTURERS

A. Hollow Metal Doors and Frames:
   1. Ceco Door, an Assa Abloy Group company: www.assaabloydss.com/#sle.
   2. Curries, an Assa Abloy Group company: www.assaabloydss.com/#sle.
   3. Republic Doors, an Allegion brand: www.republicdoor.com/#sle.
   4. Steelcraft, an Allegion brand: www.allegion.com/#sle.

2.2 PERFORMANCE REQUIREMENTS

A. Requirements for Hollow Metal Doors and Frames:
   1. Steel Sheet: Comply with one or more of the following requirements; galvannealed steel complying with ASTM A653/A653M, cold-rolled steel complying with ASTM A1008/A1008M, or hot-rolled pickled and oiled (HRPO) steel complying with ASTM A1011/A1011M, commercial steel (CS) Type B, for each.
   2. Accessibility: Comply with ICC A117.1 and ADA Standards.
   3. Exterior Door Top Closures: Flush end closure channel, with top and door faces aligned.
   4. Door Edge Profile: Beveled, both sides.
   5. Typical Door Face Sheets: Flush.
   6. Hardware Preparations, Selections and Locations: Comply with NAAMM HMMA 830 and NAAMM HMMA 831 or BHMA A156.115 and ANSI/SDI A250.8 (SDI-100) in accordance with specified requirements.
   7. Zinc Coating for Typical Interior and/or Exterior Locations: Provide metal components zinc-coated (galvanized) and/or zinc-iron alloy-coated (galvannealed) by the hot-dip process in accordance with ASTM A653/A653M, with manufacturer's standard coating thickness, unless noted otherwise for specific hollow metal doors and frames.
      a. Based on SDI Standards: Provide at least A40/ZF120 (galvannealed) when necessary, coating not required for typical interior door applications, and at least A60/ZF180 (galvannealed) for corrosive locations.

B. Combined Requirements: If a particular door and frame unit is indicated to comply with more than one type of requirement, comply with the specified requirements for each type; for instance, an exterior door that is also indicated as being sound-rated must comply with the requirements specified for exterior doors and for sound-rated doors; where two requirements conflict, comply with the most stringent.

2.3 HOLLOW METAL DOORS

A. Exterior Doors: Thermally insulated.
   1. Based on SDI Standards: ANSI/SDI A250.8 (SDI-100).
      a. Level 1 - Standard-duty.
      b. Physical Performance Level C, 250,000 cycles; in accordance with ANSI/SDI A250.4.
      c. Model 1 - Full Flush.
      d. Door Face Metal Thickness: 20 gauge, 0.032 inch (0.8 mm), minimum.
      e. Zinc Coating: A60/ZF180 galvannealed coating; ASTM A653/A653M.
   2. Door Core Material: Polystyrene, 1 lbs/cu ft minimum density.
      a. Foam Plastic Insulation: Manufacturer's standard board insulation with maximum flame spread index (FSI) of 75, and maximum smoke developed index (SDI) of 450 in accordance with ASTM E84, and completely enclosed within interior of door.
   3. Door Thickness: 1-3/4 inches (44.5 mm), nominal.
   4. Door Finish: Factory primed and field finished.

2.4 HOLLOW METAL FRAMES

A. Comply with standards and/or custom guidelines as indicated for corresponding door in accordance with applicable door frame requirements.

B. Exterior Door Frames: Face welded type.
   1. Galvanizing: Components hot-dipped zinc-iron alloy-coated (galvannealed) in accordance with ASTM A653/A653M, with A40/ZF120 coating.
   2. Frame Metal Thickness: 18 gauge, 0.042 inch (1.0 mm), minimum.
   3. Frame Finish: Factory primed and field finished.
   4. Weatherstripping: Separate, see Section 08 7100.

2.5 FINISHES

A. Primer: Rust-inhibiting, complying with ANSI/SDI A250.10, door manufacturer's standard.

2.6 ACCESSORIES

A. Silencers: Resilient rubber, fitted into drilled hole; provide three on strike side of single door, three on center mullion of pairs, and two on head of pairs without center mullions.

B. Temporary Frame Spreaders: Provide for factory- or shop-assembled frames.

PART 3 - EXECUTION

3.1 EXAMINATION

A. Verify existing conditions before starting work.

B. Verify that opening sizes and tolerances are acceptable.

C. Verify that finished walls are in plane to ensure proper door alignment.

3.2 INSTALLATION

A. Install doors and frames in accordance with manufacturer's instructions and related requirements of specified door and frame standards or custom guidelines indicated.

B. Coordinate frame anchor placement with wall construction.

C. Install door hardware as specified in Section 08 7100.

3.3 TOLERANCES

A. Maximum Diagonal Distortion: 1/16 inch (1.6 mm) measured with straight edge, corner to corner.

3.4 ADJUSTING

A. Adjust for smooth and balanced door movement.

3.5 SCHEDULE

A. Refer to Door and Frame Schedule on the drawings.

++ END OF SECTION ++

SECTION 08331

OVERHEAD COILING DOORS

PART 1 - GENERAL

1.1 SECTION INCLUDES

A. Overhead coiling doors, operating hardware, non-fire-rated and exterior; electrically operated.

B. Wiring from electric circuit disconnect to operator to control station.

1.2 REFERENCE STANDARDS

A. ASTM A36/A36M - Standard Specification for Carbon Structural Steel; 2014.

B. ASTM A123/A123M - Standard Specification for Zinc (Hot-Dip Galvanized) Coatings on Iron and Steel Products; 2015.

C. ASTM A653/A653M - Standard Specification for Steel Sheet, Zinc-Coated (Galvanized) or Zinc-Iron Alloy-Coated (Galvannealed) by the Hot-Dip Process; 2015.

D. NEMA 250 - Enclosures for Electrical Equipment (1000 Volts Maximum); 2014.

E. NEMA ICS 2 - Industrial Control and Systems Controllers, Contactors and Overload Relays Rated 600 Volts; 2000 (R2005), with errata, 2008.

F. NEMA MG 1 - Motors and Generators; 2016.

G. UL 325 - Standard for Door, Drapery, Gate, Louver, and Window Operators and Systems; Current Edition, Including All Revisions.

1.3 SUBMITTALS

A. Product Data: Provide general construction, electrical equipment, and component connections and details.

B. Shop Drawings: Indicate pertinent dimensioning, anchorage methods, hardware locations, and installation details.

C. Maintenance Data: Indicate lubrication requirements and frequency and periodic adjustments required.

1.4 QUALITY ASSURANCE

A. Products Requiring Electrical Connection: Listed and classified by testing firm acceptable to authorities having jurisdiction as suitable for purpose specified.

PART 2 - PRODUCTS

2.1 MANUFACTURERS

A. Overhead Coiling Doors:
   1. Basis of Design Manufacturer: Wayne-Dalton, a Division of Overhead Door Corporation; Product Model 625: www.wayne-dalton.com.
   2. Additional acceptable manufacturers, subject to meeting specification requirements:
      a. Cornell Iron Works, Inc: www.cornelliron.com/#sle.
      b. Raynor Garage Doors: www.raynor.com/#sle.
      c. The Cookson Company: www.cooksondoor.com/#sle.
   3. Substitutions: See Section 01640 - Materials and Equipment.

2.2 COILING DOORS

A. Exterior Coiling Doors: Steel slat curtain.
   1. Capable of withstanding positive and negative wind loads of 20 psf (940 Pa), without undue deflection or damage to components.
   2. Sandwich slat construction with insulated core of foamed-in-place polyurethane insulation; minimum R-value of 8.1 (RSI-value of 1.43).
   3. Nominal Slat Size: 0-3/4 inches (19 mm) wide by required length.
   4. Finish: Factory painted, white color.
   5. Guide, Angles: Galvanized steel.
   6. Hood Enclosure: Manufacturer's standard; primed steel.
   7. Mounting: Surface mounted.
   8. Locking Devices: Lock and latch handle on outside.

2.3 MATERIALS AND COMPONENTS

A. Metal Curtain Construction: Interlocking slats.
   1. Slat Ends: Alternate slats fitted with end locks to act as wearing surface in guides and to prevent lateral movement.
   2. Curtain Bottom for Slat Curtains: Fitted with angles to provide reinforcement and positive contact in closed position.
   3. Weatherstripping for Exterior Doors: Moisture and rot proof, resilient type, located at jamb edges, bottom of curtain, and where curtain enters hood enclosure of exterior doors.
   4. Steel Slats: Minimum thickness, 24 gage, 0.02 inch (0.635 mm); ASTM A653/A653M galvanized steel sheet.
      a. Galvanizing: Minimum G90 (Z275) coating.

B. Guides - Angle: ASTM A36/A36M metal angles, size as required for wind loading.
   1. Hot-dip galvanized in compliance with ASTM A123/A123M.

C. Hood Enclosure and Trim: Internally reinforced to maintain rigidity and shape.
   1. Minimum thickness; 24 gage, 0.02 inch (0.635 mm).

D. Lock Hardware:
   1. Cylindrical Locking Mechanism: Latchset lock cylinder, specified in Section 08710.
   2. Latching Mechanism: Inside mounted, adjustable keeper, spring activated latch bar feature to keep in locked or retracted position.
   3. Latch Handle: Manufacturer's standard.

E. Roller Shaft Counterbalance: Steel pipe and helical steel spring system, capable of producing torque sufficient to ensure smooth operation of curtain from any position and capable of holding position at mid-travel; with adjustable spring tension; requiring 25 lb (10 kg) nominal force to operate.

2.4 ELECTRIC OPERATION

A. Electric Operators:
   1. Mounting: Side mounted.
   2. Motor Enclosure:
      a. Exterior Coiling Doors: NEMA MG 1, Type 4; open drip proof.
   3. Motor Rating: 1/3 HP (250 W); continuous duty.
   4. Motor Voltage: 120 volts, single phase, 60 Hz.
   5. Motor Controller: NEMA ICS 2, full voltage, reversing magnetic motor starter.
   6. Controller Enclosure: NEMA 250, Type 1.
   7. Opening Speed: 12 inches per second (300 mm/sec).
   8. Brake: Adjustable friction clutch type, activated by motor controller.
   9. Manual override in case of power failure.
   10. Refer to Section 26 0583 for electrical connections.

B. Control Station: Provide standard three button (Open-Close-Stop) momentary-contact control device for each operator complying with UL 325.
   1. 24 volt circuit.
   2. Surface mounted, at interior door jamb.
   3. Entrapment Protection Devices: Provide sensing devices and safety mechanisms complying with UL 325.
      a. Primary Device: Provide electric sensing edge, wireless sensing, NEMA 1 photo eye sensors, or NEMA 4X photo eye sensors as required with momentary-contact control device.

C. Safety Edge: Located at bottom of coiling door, full width, electro-mechanical sensitized type, wired to stop and reverse door direction upon striking object, hollow neoprene covered.

PART 3 - EXECUTION

3.1 EXAMINATION

A. Verify that opening sizes, tolerances and conditions are acceptable.

3.2 INSTALLATION

A. Install units in accordance with manufacturer's instructions.

B. Use anchorage devices to securely fasten assembly to wall construction and building framing without distortion or stress.

C. Securely and rigidly brace components suspended from structure. Secure guides to structural members only.

D. Fit and align assembly including hardware; level and plumb, to provide smooth operation.

E. Coordinate installation of electrical service with Section 01040 Coordination and Division 16 Electrical.

F. Complete wiring from disconnect to unit components.

G. Install enclosure and perimeter trim.

3.3 TOLERANCES

A. Maintain dimensional tolerances and alignment with adjacent work.

B. Maximum Variation From Plumb: 1/16 inch (1.6 mm).

C. Maximum Variation From Level: 1/16 inch (1.6 mm).

D. Longitudinal or Diagonal Warp: Plus or minus 1/8 inch per 10 feet (3.2 mm per 3 m) straight edge.

3.4 ADJUSTING

A. Adjust operating assemblies for smooth and noiseless operation.

3.5 CLEANING

A. Clean installed components.

B. Remove labels and visible markings.

++ END OF SECTION ++

SECTION 08710

DOOR HARDWARE

PART 1 - GENERAL

1.1 SECTION INCLUDES

A. Hardware for hollow metal doors.

B. Lock cylinders for doors that hardware is specified in other sections.

C. Thresholds.

D. Weatherstripping and gasketing.

1.2 REFERENCE STANDARDS

A. ADA Standards - Americans with Disabilities Act (ADA) Standards for Accessible Design; 2010.

B. BHMA (CPD) - Certified Products Directory; Current Edition.

C. BHMA A156.16 - American National Standard for Auxiliary Hardware; 2013.

D. BHMA A156.115 - American National Standard for Hardware Preparation in Steel Doors and Steel Frames; 2014.

E. DHI (LOCS) - Recommended Locations for Architectural Hardware for Standard Steel Doors and Frames; 2004.

F. ICC A117.1 - Accessible and Usable Buildings and Facilities; 2009.

1.3 ADMINISTRATIVE REQUIREMENTS

A. Coordinate the manufacture, fabrication, and installation of products that door hardware is installed on.

B. Furnish templates for door and frame preparation to manufacturers and fabricators of products requiring internal reinforcement for door hardware.

1.4 SUBMITTALS

A. Product Data: Manufacturer's catalog literature for each type of hardware, marked to clearly show products to be furnished for this project, and includes construction details, material descriptions, finishes, and dimensions and profiles of individual components.

B. Shop Drawings - Door Hardware Schedule: Submit detailed listing that includes each item of hardware to be installed on each door. Use door numbering scheme as included in Contract Documents.
   1. Prepared by or under supervision of Architectural Hardware Consultant (AHC).
   2. Provide complete description for each door listed.
   3. Provide manufacturer's and product names, and catalog numbers; include functions, types, styles, sizes and finishes of each item.

C. Shop Drawings: Submit for approval the following:
   1. A copy of this specification section, with addendum updates included, and all referenced and applicable sections, with addendum updates included, with each paragraph check-marked to indicate specification compliance or marked to indicate requested deviations from specification requirements. Check marks (□) shall denote full compliance with a paragraph as a whole. If deviations from the specifications are indicated, and therefore requested by the CONTRACTOR, each deviation shall be underlined and denoted by a number in the margin to the right of the identified paragraph, referenced to a detailed written explanation of the reasons for requesting the deviation. The ENGINEER shall be the final authority for determining acceptability of requested deviations. The CONTRACTOR shall furnish equipment and/or services as specified if an exception and/or deviation is rejected. The remaining portions of the paragraph not underlined will signify compliance on the part of the CONTRACTOR with the specifications. Failure to include a copy of the marked-up specification sections, along with justification(s) for any requested deviations to the specification requirements, with the submittal shall be sufficient cause for rejection of the entire submittal with no further consideration.
   2. The CONTRACTOR shall submit the preventive maintenance information package as part of the shop drawing submittal package to the ENGINEER for review and approval. **SHOP DRAWING SUBMITTAL PACKAGE WILL NOT BE APPROVED WITHOUT ACCEPTANCE OF PREVENTIVE MAINTENANCE INFORMATION.**

1.5 DELIVERY, STORAGE, AND HANDLING

A. Package hardware items individually; label and identify each package with door opening code to match door hardware schedule.

1.6 WARRANTY

A. Warranty against defects in material and workmanship for period indicated, from Date of Substantial Completion.
   1. Closers: Five years, minimum.
   2. Exit Devices: Three years, minimum.

3. Locksets and Cylinders: Three years, minimum.
4. Other Hardware: Two years, minimum.

PART 2 - PRODUCTS

2.1 DESIGN AND PERFORMANCE CRITERIA

A. Provide specified door hardware as required to make doors fully functional, compliant with applicable codes, and secure to extent indicated.

B. Provide individual items of single type, of same model, and by same manufacturer.

C. Provide door hardware products that comply with the following requirements:
   1. Applicable provisions of federal, state, and local codes.
   2. Accessibility: ADA Standards and ICC A117.1.
   3. Listed and certified compliant with specified standards by BHMA (CPD).
   4. Auxiliary Hardware: BHMA A156.16.
   5. Hardware Preparation for Steel Doors and Steel Frames: BHMA A156.115.

D. Fasteners:
   1. Provide fasteners of proper type, size, quantity, and finish that comply with commercially recognized standards for proposed applications.
      a. Aluminum fasteners are not permitted.
      b. Provide Phillips flat-head screws with heads finished to match door surface hardware unless otherwise indicated.
   2. Provide machine screws for attachment to reinforced hollow metal and aluminum frames.
      a. Self-drilling (Tek) type screws are not permitted.
   3. Provide stainless steel machine screws and lead expansion shields for concrete and masonry substrates.
   4. Provide wall grip inserts for hollow wall construction.

2.2 FINISHES

A. Finishes: Identified in Door Hardware Schedule.

PART 3 - EXECUTION

3.1 EXAMINATION

A. Verify that doors and frames are ready to receive this work; labeled, fire-rated doors and frames are properly installed, and dimensions are as indicated on shop drawings.

3.2 INSTALLATION

A. Install hardware in accordance with manufacturer's instructions and applicable codes.

B. Use templates provided by hardware item manufacturer.

C. Do not install surface mounted items until application of finishes to substrate are fully completed.

D. Door Hardware Mounting Heights: Distance from finished floor to center line of hardware item. As indicated in following list; unless noted otherwise in Door Hardware Schedule or on drawings.
   1. For Steel Doors and Frames: Install in compliance with DHI (LOCS) recommendations.
   2. Mounting heights in compliance with ADA Standards:
      a. Locksets: 40-5/16 inch (1024 mm).
      b. Push Plates/Pull Bars: 42 inch (1067 mm).
      c. Deadlocks (Deadbolts): 48 inch (1219 mm).
      d. Exit Devices: 40-5/16 inch (1024 mm).

E. Set exterior door thresholds with full-width bead of elastomeric sealant at each point of contact with floor providing a continuous weather seal; anchor thresholds with stainless steel countersunk screws.

++ END OF SECTION ++

SECTION 09900

PAINTING

PART 1 - GENERAL

1.1 SUMMARY

A. This Section includes surface preparation and field painting of the following:
   1. Exposed exterior items and surfaces.
   2. Exposed interior items and surfaces.
   3. Surface preparation, priming, and finish coats specified in this Section are in addition to shop priming and surface treatment specified in other Sections.

B. Paint exposed surfaces, except where the paint schedules indicate that a surface or material is not to be painted or is to remain natural. If the paint schedules do not specifically mention an item or a surface, paint the item or surface the same as similar adjacent materials or surfaces, whether or not schedules indicate colors. If the schedules do not indicate color or finish that is mentioned, the ENGINEER will select from standard colors and finishes available.
   1. Painting includes field painting of exposed bare and covered pipes and ducts (including color coding), hangers, exposed steel and iron work, and primed metal surfaces of mechanical and electrical equipment.

C. Unless indicated otherwise, do not paint prefinished items, concealed surfaces, finished metal surfaces, operating parts, and labels.
   1. Prefinished items include, but are not limited to, the following factory-finished components:
      a. Architectural woodwork and casework.
      b. Motor nameplates.
      c. Instrumentation and electrical mounting hardware such as nuts, bolts, screws, U-bolts, handles, latches, and hinges.
      d. Analyzers, probes, nuts, bolts, and screws or any mounting hardware.
      e. Metal toilet enclosures.
      f. Acoustical ceiling panels.
      g. Metal lockers.
      h. Ceramic tile, windows, glass, resilient flooring; other architectural features, such as "finish" hardware, furnished in aluminum, bronze or plated ferrous metal, prefinished panels, or other items installed prefinished.
      i. Finished mechanical and electrical equipment, except as indicated in the Specifications or on the Plans.
      j. Light fixtures.
      k. Interior distribution cabinets and switch gear, except as indicated.

2. Concealed surfaces include walls or ceilings in the following generally inaccessible spaces:
    a. Foundation spaces, unless noted otherwise.
    b. Surfaces behind furred areas.
    c. Ceiling plenums.
    d. Utility tunnels.
    e. Pipe spaces.
    f. Duct shafts.
3. Finished metal surfaces include the following:
    a. Stainless steel or chromium plated items.
    b. Chromium plate.
    c. Copper.
    d. Bronze and brass.
    e. Buried cast and ductile iron pipe encased with a protective polyethylene sleeve.
    f. Anodized aluminum, aluminum gratings, and floor plates.
        1) Paint aluminum surfaces in contact with concrete, grout, masonry, wood, or dissimilar materials as described below:
            a) Surface must be clean, dry, and free of oil, grease, and other contaminants. Surface preparation with SSPC-SP7 brush-off abrasive blast cleaning. Apply two coats of Tnemec Series 20 Pota-Pox or approved equal; each coat shall be 3-5 mils. Coating must be NSF 61 approved.
    g. Prefinished louvers, except those in doors, unless otherwise noted and acoustical ceiling panels.
4. Operating parts include moving parts of operating equipment and the following:
    a. Valve and damper operators or handles.
    b. Linkages.
    c. Sensing devices.
    d. Motor and fan shafts.
5. Labels: Do not paint over Underwriters Laboratories (UL), Factory Mutual (FM), fire rating labels, equipment serial number and capacity labels, or other code-required labels or equipment name, identification, performance rating, nomenclature plates, and equipment identification plates.

1.2 RELATED SECTIONS

A. Division 1, General Requirements, Specification Sections, apply to this Section.

1.3 SECTION INCLUDES

A. Surface preparation.

B. Field application of paints and other coatings.

C. Pipe identification markers.

D. Surfaces to Be Finished are provided in the schedule at end of Section and in the Contract Documents.

1.4 REFERENCES

A. ANSI A13.1, Scheme for the Identification of Piping Systems; 1981 (revised 1993).

B. ASTM D16, Standard Terminology Relating to Paint, Varnish, Lacquer, and Related Products; 1995.

C. OSHA 1910.144, Code of Federal Regulations (CFR) Title 29.

D. SSPC (PM2), Steel Structures Painting Manual, Vol. 2, Systems and Specifications; Steel Structures Painting Council; 1995.

1.5 DEFINITIONS

A. General: Standard coating terms defined in ASTM D16 apply to this Section.
   1. Flat refers to a lusterless or matte finish with a gloss range below 15 when measured at an 85 degree meter.
   2. Eggshell refers to low-sheen finish with a gloss range between 5 and 20 when measured at a 60-degree meter.
   3. Satin refers to low-sheen finish with a gloss range between 15 and 35 when measured at a 60 degree meter.
   4. Semi-gloss refers to medium-sheen finish with a gloss range between 30 and 65 when measured at a 60 degree meter.
   5. Full gloss refers to high-sheen finish with a gloss range more than 65 when measured at a 60 degree meter.
   6. Buried refers to covered with earth.
   7. Exposed or exposed surfaces refers to areas visible when permanent or built-in fixtures, grilles, and similar components are in place. Extend coatings in these areas, as required, to maintain the system integrity and provide desired protection.
   8. Submerged refers to materials which are permanently or intermittently below the maximum water or liquid surface elevation in open top structures, unless otherwise noted or otherwise shown; materials within liquid or residual solids carrying structures that are covered, including materials on the underside of the covers, whether in contact with liquids or not, unless otherwise noted or otherwise shown; materials within an enclosed process structure, whether in contact with liquids or not.

1.6 SUBMITTALS

A. See Section 01300, Submittals, for submittal procedures.

B. Product Data: For each paint system specified. Include block fillers and primers.
   1. Material List: Provide an inclusive list of required coating materials. Indicate each material and cross-reference specific coating, finish system, and application. Identify each material by manufacturer's catalog number and general classification.
   2. Manufacturer's Information: Provide manufacturer's technical information, including label analysis and instructions for handling, storing, and applying each coating material proposed for use.
      a. Identify manufacturer's recommended, published spreading rate, and dry film thickness of each coating material proposed for use.
      b. Indicate manufacturer's instructions on surface and special surface preparation procedures.
      c. Include the following: Mixing instructions, shelf life, method of application, recommended number of coats, drying time of each coat including prime coat, required prime coat, compatible and non-compatible prime coats, and recommended thinners when required.

C. Pipe Identification Markers: Submit product data and marker sample for each type of pipe identification required.

D. Maintenance Data: Submit data on cleaning, touch-up, and repair of painted and coated surfaces.

E. Samples for Initial Selection: Manufacturer's color charts showing the full range of colors available for each type of finish-coat material indicated. Submit two paper chip samples, 3-inch by 3-inch in size.

F. Before supplying any material to the site, the painting subcontractor and the paint manufacturer's area representative shall prepare a complete schedule showing the materials proposed to be used for each treatment specified, and submit same to ARCHITECT and ENGINEER for review/approval.

G. Paint colors will be specified by the ARCHITECT for the architectural paint system specified herein, who, before any Work is done, will furnish color chips and schedule showing where the various colors shall go.

H. Qualification Data: For firms and persons specified in Paragraph 1.9 to demonstrate their capabilities and experience. Include lists of completed projects with project names and addresses, names and addresses of Engineers or Architects and Owners, and other information specified.

I. Manufacturer's Certification: Submit in accordance with Paragraph 3.8 at the completion of the Work.

J. A copy of this specification section, with addendum updates included, and all referenced and applicable sections, with addendum updates included, with each paragraph check-marked to indicate specification compliance or marked to indicate requested deviations from specification requirements. Check marks (✓) shall denote full compliance with a paragraph as a whole. If deviations from the specifications are indicated, and therefore requested by the CONTRACTOR, each deviation shall be underlined and denoted by a number in the margin to the right of the identified paragraph, referenced to a detailed written explanation of the reasons for requesting the deviation. The ENGINEER shall be the final authority for determining acceptability of requested deviations. The CONTRACTOR shall furnish equipment and/or services as specified if an exception and/or deviation is rejected. The remaining portions of the paragraph not underlined will signify compliance on the part of the CONTRACTOR with the specifications. Failure to include a copy of the marked-up specification sections, along with justification(s) for any requested deviations to the specification requirements, with the submittal shall be sufficient cause for rejection of the entire submittal with no further consideration.

1.7 REGULATORY REQUIREMENTS

A. Conform to applicable code for flame and smoke rating and VOC requirements for products and finishes.

B. Lead, heavy metals, cadmium, and chromate content of painting materials shall not exceed amount permitted by Federal, State, and local authorities.

C. Coatings for surfaces in contact with potable water or water being treated for potable use shall not impart any taste or odor to the water or result in any organic or inorganic content in excess of the maximum contaminant level established by applicable laws or regulations.

D. Comply with governing code requirements for air quality and material disposal regulations.

1.8 MOCK-UP

A. Provide stepped-down job mock-ups for all painting and coating systems showing all components of the preparation and installation before any Work shall commence. Verify all dry film thicknesses, surface preparations, and methods of installation in addition to color and texture of the finished work.

B. Provide mock-ups for each of the following substrates, illustrating painting and coating colors and finishes:
   1. Ferrous Metal: Provide panel equal to 4 square feet in size for each color and finish.
   2. Provide door and frame assembly for each paint coating color and finish.

C. Locate where directed by ENGINEER.

D. Mock-up(s) may remain as part of the Work.

E. Work advanced without approved job mock-ups shall be completely removed and re-installed without additional compensation to the OWNER.

1.9 QUALITY ASSURANCE

A. Applicator Qualifications: Engage an experienced applicator who has completed painting system applications similar in material and extent to that indicated for this Project with a record of successful in-service performance.

B. Source Limitations: Obtain block fillers, primers, and undercoat materials for each coating system from the same manufacturer as the finish coats.

C. Products shall be of best grade or first line.

1.10 DELIVERY, STORAGE, AND HANDLING

A. Deliver materials to the Project site in manufacturer's original, unopened packages and containers bearing manufacturer's name and label, and the following information:
   1. Product name or title of material.
   2. Product description (generic classification or binder type).
   3. Manufacturer's stock number, lot number, brand code, and date of manufacture.
   4. Contents by volume for pigment and vehicle constituents.
   5. Thinning instructions.
   6. Application instructions.
   7. Coverage and surface preparation.
   8. Drying time.
   9. Cleanup requirements.
   10. Instructions for mixing and reducing.
   11. Color name and number.
   12. Material Safety Data Sheets.

B. Store materials not in use in tightly covered containers in a well-ventilated area at a minimum ambient temperature of 45º F (7º C). Maintain containers used in storage in a clean condition, free of foreign materials and residue.
   1. Protect from freezing. Keep storage area neat and orderly. Remove oily rags and waste daily. Take necessary measures to ensure that workers and work areas are protected from fire and health hazards resulting from handling, mixing, and application.
   2. Provide fire extinguishers and post caution signs warning against smoking and open flame when working with flammable materials.

C. Protect work of other trades, whether being painted or not, against damage by painting. Correct damage by cleaning, repairing, or replacing and repainting, as approved by the ENGINEER. Provide "Wet Paint" signs to protect newly painted finishes. Remove temporary protective wrappings provided by others to protect their work after completing painting operations.

1.11 PROJECT CONDITIONS

A. Apply water-based paints only when the temperature of surfaces to be painted and surrounding air temperatures are between 50º F and 120º F (10º C and 48.9º C).

B. Apply solvent-thinned paints only when the temperature of surfaces to be painted and surrounding air temperatures are between 45º F and 120º F (7.2º C and 48.9º C).

C. Provide lighting level of 80 foot candles measured mid-height at substrate surface.

D. Do not apply paint in snow, rain, fog, or mist; or when the relative humidity exceeds 85%; or at temperatures less than 5º F (3º C) above the dew point; or to damp or wet surfaces.
   1. Painting may continue during inclement weather if surfaces and areas to be painted are enclosed and heated within temperature limits specified by manufacturer during application and drying periods.

1.12 UNUSED MATERIALS

A. Furnish unused materials in unopened or opened and resealed containers for storage and identify with labels describing contents. Deliver materials to the OWNER.

1.13 EXTRA MATERIALS

A. Supply one gallon of each color; store where directed.

B. Label each container with color in addition to the manufacturer's label.

PART 2 - PRODUCTS

2.1 MANUFACTURERS

A. Available Products: Subject to compliance with requirements, products that may be incorporated into the Work include, but are not limited to, products listed in the paint schedules.

B. Manufacturers Names: The following manufacturers are referred to in the paint schedules by use of shortened versions of their names, which are shown in parentheses:
   1. Benjamin Moore & Co. (Moore).
   2. PPG Industries, Inc. (PPG).
   3. Tnemec Co. (Tnemec).
   4. Frazee Paint.
   5. Ameron.
   6. Valspar.

2.2 PAINT MATERIALS, GENERAL

A. Paint exposed surfaces, except as indicated in Paragraph 1.4 and/or in Drawings/Specifications. If an item or surface is not specifically mentioned, paint the item or surface the same as similar adjacent materials of surfaces whether or not the schedule indicates color(s). If the schedule does not indicate color(s) or finish(es), the ENGINEER will select from standard colors and finishes available.

B. Equipment supplied with a finished coat by the manufacturers shall be touched-up by the CONTRACTOR.

C. Paints and Coatings: Ready mixed, except field-catalyzed coatings. Prepare pigments:
   1. To a soft paste consistency, capable of being readily and uniformly dispersed to a homogeneous coating.
   2. For good flow and brushing properties.
   3. Capable of drying or curing free of streaks or sags.

D. Metals encased in concrete shall only receive a primer compatible with the covering material.

E. All items under and around the metal canopies shall be considered exterior and painted with materials conforming to those specified in this Specification.

F. Material Compatibility: Provide block fillers, primers, undercoats, and finish coat materials that are compatible with one another and the substrates indicated under conditions of service and application, as demonstrated by manufacturer based on testing and field experience.

G. Material Quality: Provide manufacturer's best-quality paint material of the various coating types specified. Paint-material containers not displaying manufacturer's product identification will not be acceptable.
   1. Proprietary Names: Use of manufacturer's proprietary product names to designate colors or materials is not intended to imply that products named are required to be used to the exclusion of equivalent products of other manufacturers. Furnish manufacturer's material data and certificates of performance for proposed substitutions.

H. Color Coding: Unless otherwise specified, all color coding of piping, ducts, and equipment shall comply with applicable standards of the following:
   1. ANSI A13.1.
   2. OSHA 1910.144.

I. At completion of construction activities of other trades, touch-up and restore damaged or defaced painted surfaces.

J. Architectural Color Schedule: Colors indicated are by Tnemec Company, Inc.: www.tnemec.com.
   1. Shading Devices: Match existing colors at existing Administration Building located on site.
   2. Exterior Hollow Metal Doors and Frames: Match existing colors at existing Administration Building located on site.
   3. Exposed CMU, Interior: 11WH White.
   4. Interior Hollow Metal Doors and Frames: 33GR Grey.
   5. Exposed Gypsum Board, Interior: 07WH Winter Mist.

K. Colors: All colors as selected by ENGINEER from manufacturer's standards except as follows:
   1. Color of safety stripe at bollards match PPG 6-330 Safety Yellow.

2.3 PAINT SYSTEMS - INTERIOR AND EXTERIOR

A. Field Primed Steel and Ferrous Metal:
   1. Exterior Exposure:
      a. Surface Preparation: SSPC SP6 Commercial Abrasive Blast Cleaning.
      b. Prime Coat: Series 69-1255 (beige) H.B. Epoxoline II; one coat; 4-6 mils DFT (dry film thickness).
      c. Finish Coat: Series 73 Endura-Shield; one coat; 3-4 mils DFT.
   2. Interior Exposure:

a. Surface Preparation: SSPC SP6 Commercial Abrasive Blast Cleaning.
b. Prime Coat: Series 69-1255 (beige) H.B. Epoxoline II; one coat; 3-5 mils DFT.
c. Finish Coat: Series 69 H.B. Epoxoline; one coat; 4-6 mils DFT.

3. Immersion or Partial Immersion Exposure:
a. Surface Preparation: SSPC SP10 Near-White Metal Abrasive Blast Cleaning.
b. Prime Coat: Series 66 H.B. Epoxoline; one coat; 4-6 mils DFT.
c. Finish Coat: Series 69 H.B. Epoxoline II; one coat; 4-6 mils DFT.

B. Shop and Factory Primed Steel:
1. Exterior Exposure:
a. Field Prime Coat (over factory prime coat): Series 135 (beige) Chembuild; one coat; 3-4 mils DFT.
b. Finish Coat: Series 73 Endura-Shield; one coat; 3-4 mils DFT.

2. Interior Exposure:
a. Field Prime Coat (over factory prime coat): Series 135 (beige) Chembuild; one coat; 3-4 mils DFT.
b. Finish Coat: Series 69 H.B. Epoxoline; one coat; 4-6 mils DFT.

3. Immersion or Partial Immersion Exposure:
a. Surface Preparation: Brush off abrasive blast cleaning if required for recoat of the shop primer. Coating surface to be clean, dry, and free of contaminants prior to application of the field coats.
b. Prime Coat: Series 66 H.B. Epoxoline; one coat; 2.5-3 mils DFT.
c. Finish Coat: Series 69 H.B. Epoxoline II; one coat; 4-6 mils DFT.

C. Galvanized Steel and Non-Ferrous Metals:
1. Exterior Exposure:
a. Surface Preparation: Brush-off abrasive blast cleaning.
b. Prime Coat: Series 69-1255 (beige) H.B. Epoxoline II; one coat; 3-4 mils DFT.
c. Finish Coat: Series 73 Endure-Shield; one coat; 3-4 mils DFT.

2. Interior Exposure:
a. Surface Preparation: Clean, dry and free of contaminants.
b. Prime Coat: Series 135 (beige) Chembuild; one coat; 3-4 mils.
c. Finish Coat: Series 69 H.B. Epoxoline II; one coat; 4-6 mils DFT.

3. Immersion or Partial Immersion Exposure:
a. Surface Preparation: Brush-off abrasive blast cleaning.
b. Prime Coat: Series 66 H.B. Epoxoline; one coat; 4-6 mils DFT.
c. Finish Coat: Series 69 H.B. Epoxoline II; one coat; 4-6 mils DFT.

D. Ductile and Cast Iron:
1. Exterior Exposure:

a. Surface Preparation: Solvent scrub with stiff bristle brush, followed by brush-off abrasive blast cleaning to a minimum surface profile depth of 1.5 mils DFT.
b. Prime Coat: Series 69-1255 (beige) H.B. Epoxoline II; one coat; 3-5 mils DFT.
c. Finish Coat: Series 73 Endura-Shield; one coat; 3-4 mils DFT.

2. Interior Exposure:
a. Surface Preparation: Clean, dry, and free of contaminants.
b. Prime Coat: Series 135 Chembuild; one coat; 4-6 mils DFT.
c. Finish Coat: Series 69 H.B. Epoxoline II; one coat; 4-6 mils DFT.

3. Buried:
a. Surface Preparation: Solvent scrub with stiff bristle brush followed by brush-off abrasive blast cleaning to a minimum surface profile depth of 1.5 mils DFT.
b. Prime Coat: Series 69-1255 (beige) H.B. Epoxoline II; one coat; 3-5 mils DFT.
c. Finish Coat: Series 69 H.B. Epoxoline II; one coat; 4-6 mils DFT.

4. Immersion:
a. Surface Preparation: Solvent scrub with stiff bristle brush, followed by brush-off abrasive blast cleaning to a minimum surface profile depth of 1.5 mils.
b. Prime Coat: Series 66 H.B. Epoxoline; one coat; 4-6 mils DFT.
c. Finish Coat: Series 69 H.B. Epoxoline II; one coat; 4-6 mils DFT.

E. Masonry:
1. Interior Exposed CMU:
a. Surface Preparation: Clean, dry, and free of contaminants.
b. Block Filler: Series 130 Envirofill; one coat; 60-80 square foot per gallon.
c. Finish Coats: Series 69 H.B. Epoxoline II; two coats; 4-6 mils DFT per coat.

F. PVC:
1. Exterior Exposure:
a. Surface Preparation: Clean, dry, and free of contaminants.
b. Prime Coat: Series 66 H.B. Epoxoline; one coat; 3-5 mils DFT.
c. Finish Coat: Series 73 Endure-Shield; one coat; 3-4 mils DFT.

2. Interior Exposure:
a. Surface Preparation: Clean, dry, and free of contaminants.
b. Finish Coat: Series 66 H.B. Epoxoline; two coats; 3-5 mils DFT per coat.

2.4 PIPE IDENTIFICATION MARKERS

A. Manufacturers: Provide products by one of the following:

1. Seton Name Plate Company.
2. W.H. Brady Company.
3. Or equal.

B. General: The size of lettering and marker shall conform to ANSI A13.1.

C. Provide brass tags for pipes under 3/4-inch outside diameter. Provide plastic pipe markers for pipes over 3/4-inch.

D. Plastic Pipe Markers: Factory fabricated, flexible, semi-rigid plastic, preformed to fit around pipe or pipe covering; minimum information indicating flow direction arrow and identification of fluid being conveyed.
   1. Markers for piping up to 6-inch diameter shall be preformed to completely wrap around the pipe requiring no adhesive. Markers for pipes over 6-inch diameter shall be preformed to the contour of the pipe and attached with stainless steel spring fasteners.

E. Metal Tags: Brass with stamped letters; tag size minimum 1-1/2-inch diameter with smooth edges.

PART 3 - EXECUTION

3.1 INSPECTION

A. Inspect substrates, areas, and conditions, with the applicator present, under which painting will be performed for compliance with paint application requirements. Verify that surfaces are ready to receive work as instructed by the product manufacturer.
   1. Do not begin to apply paint until unsatisfactory conditions have been corrected and surfaces receiving paint are thoroughly dry.
   2. Start of painting will be construed as the applicator's acceptance of surfaces and conditions within a particular area.

B. Coordination of Work: Review other Sections in which primers are provided to ensure compatibility of the total system for various substrates. On request, furnish information on characteristics of finish materials to ensure use of compatible primers.
   1. Notify the ENGINEER about anticipated problems using the materials specified over substrates primed by others.

3.2 PREPARATION

A. Perform all preparation and cleaning procedures as specified herein and in strict accordance with the paint manufacturer's instructions for each particular substrate and atmospheric condition.

B. Clean surfaces to be painted before applying paint or surface treatments. Remove oil and grease with clean cloths and cleaning solvents prior to mechanical cleaning. Program the cleaning and painting so that dust and other contaminants from the cleaning process will not fall in wet, newly painted surfaces.

C. Furnish sufficient drop cloths, shields, and protective equipment to prevent spray or droppings from fouling surfaces not being painted and, in particular, surfaces within storage and preparation area.

D. Remove hardware and hardware accessories, plates, machined surfaces, lighting fixtures, and similar items already installed that are not to be painted. If removal is impractical or impossible because of the size or weight of the item, provide surface-applied protection before surface preparation and painting.
   1. After completing painting operations in each space or area, reinstall items removed using workers skilled in the trades involved.

E. Surfaces: Correct defects and clean surfaces which affect Work of this Section. Remove or repair existing coatings that exhibit surface defects.

F. Marks: Seal marks which may bleed through surface finishes with barrier coat compatible with paint.

G. Impervious Surfaces: Remove mildew in accordance with paint manufacturer's recommendations.

H. Cleaning: Before applying paint or other surface treatments, clean the substrates of substances that could impair the bond of the various coatings. Remove oil and grease before cleaning.
   1. Schedule cleaning and painting so dust and other contaminants from the cleaning process will not fall on wet, newly painted surfaces.

I. Surface Preparation: Clean and prepare surfaces to be painted according to manufacturer's written instructions for each particular substrate condition and as specified.
   1. Provide barrier coats over incompatible primers or remove and reprime.
   2. Cementitious Materials: Prepare concrete, concrete masonry block, cement plaster, and mineral fiber-reinforced cement panel surfaces to be painted. Remove stains, loose mortar, scale, salt, efflorescence, chalk, dust, dirt, grease, oils, release agents, and other foreign matter in accordance with paint

manufacturers' recommendations. Do not use wire brushes for preparation or cleaning. Roughen as required to remove glaze. If hardeners or sealers have been used to improve curing, use mechanical methods of surface preparation.

a. Use abrasive blast cleaning methods if recommended by paint manufacturer.
b. Determine alkalinity and moisture content of surfaces by performing appropriate tests. If surfaces are sufficiently alkaline to cause the finish paint to blister and burn, correct this condition before application. Do not paint surfaces where moisture content exceeds that permitted in manufacturer's written instructions.
c. Clean concrete floors to be painted with a 5% solution of muriatic acid or other etching cleaner. Flush the floor with clean water to remove acid, neutralize with ammonia, rinse, allow to dry, and vacuum before painting.

3. Wood: Clean surfaces of dirt, oil, and other foreign substances with scrapers, mineral spirits, and sandpaper, as required. Sand surfaces exposed-to-view smooth and dust off.
   a. Scrape and clean small, dry, seasoned knots, and apply a thin coat of white shellac or other recommended knot sealer before applying primer. After priming, fill holes and imperfections in finish surfaces with putty or plastic wood filler. Sand smooth when dried.
   b. Seal pitch streaks and sappy sections with sealer. Seal cracks, pitch streaks, and sappy sections with sealer. Fill nail holes and cracks with caulking compound after prime coat has been applied; sand between coats. Back prime concealed surfaces before installation.
   c. Prime, stain, or seal wood to be painted immediately on delivery. Prime edges, ends, faces, undersides, and backsides of wood, including cabinets, counters, cases, and paneling.
   d. When transparent finish is required, back prime with spar varnish.
   e. Seal tops, bottoms, and cutouts of unprimed wood doors with a heavy coat of varnish or sealer immediately on delivery.
4. Gypsum Board Surfaces to Be Painted: Fill minor defects with filler compound. Spot prime defects after repair.
5. Zinc Coated Surfaces: Remove surface contamination and oils and prepare for priming in accordance with metal manufacturer's recommendations.
6. Plaster Surfaces to Be Painted: Allow new plaster surfaces to cure 28 days. Remove grease, dirt, loose mortar, scale or alkali powder, high alkali surfaces, and other foreign matter in accordance with paint manufacturer's recommendation. Fill hairline cracks, small holes, and imperfections with patching plaster that is compatible with paint. Make smooth and flush with adjacent surfaces. Do not use wire brushes for preparation or cleaning.
7. Aluminum: Remove surface contamination by steam or high pressure water. Remove oxidation with acid etch and solvent washing.
8. Copper: Remove surface contamination by steam or high pressure water.

9. Ferrous Metals: Clean and remove oil, grease, dirt, loose mill scale, and other foreign substances from ungalvanized ferrous metal surfaces that have not been shop coated as outlined in Paragraph 2.3. Use solvent or mechanical cleaning methods that comply with the Steel Structures Painting Council's (SSPC) recommendations.
    a. Blast steel surfaces clean, as recommended by paint system manufacturer.
    b. Touch-up bare areas and shop applied prime coats that have been damaged. Wire brush, clean with solvents recommended by paint manufacturer, and touch-up with the same primer as the shop coat.
    c. For shop-primed ferrous metal surfaces, clean and prepare in accordance with manufacturer's recommendations. Feather edges to make touch-up patches inconspicuous. Prime bare steel surfaces. Provide barrier coat over entire shop primed items.
10. Galvanized Surfaces: Clean galvanized surfaces with nonpetroleum-based solvents so surface is free of oil and surface contaminants. Remove pretreatment from galvanized sheet metal fabricated from coil stock by mechanical methods.
11. Ductile Iron Pipe: All new ductile iron pipe (DIP) intended for immersion service shall be prepared per coating manufacturer's specifications and as specified herein.
    a. Remove grease, rust scale, rust and touch-up any chipped or abraded areas on items that have been shop coated. Items intended for immersion service that have not been shop coated shall be sandblasted to "Near White Blast Cleaning" condition per SSPC SP-10 prior to receiving coating.
    b. All new DIP intended for non-immersion service shall be sandblasted to "Commercial Blast Cleaning" condition per SSPC SP-6 prior to receiving coating.

J. Materials Preparation: Mix and prepare paint materials according to manufacturer's written instructions.
1. Maintain containers used in mixing and applying paint in a clean condition, free of foreign materials and residue.
2. Stir material before application to produce a mixture of uniform density. Stir as required during application. Do not stir surface film into material. If necessary, remove surface film and strain material before using.
3. Use only thinners approved by paint manufacturer and only within recommended limits.

K. Tinting: Tint each undercoat a lighter shade to simplify identification of each coat when multiple coats of the same material are applied. Tint undercoats to match the color of the finish coat, but provide sufficient differences in shade of undercoats to distinguish each separate coat.

3.3 APPLICATION

A. General: Apply paint according to manufacturer's written instructions. Use applicators and techniques best suited for substrate and type of material being applied.
   1. Any spot measurement found below the required minimum dry film thickness shall be repainted by the CONTRACTOR in accordance with the manufacturer's instructions, at no additional cost to the OWNER.
   2. Do not apply finishes on surfaces that are not sufficiently dry. Allow each coat of finish to dry before following coat is applied, unless directed otherwise by the manufacturer.
   3. Where adjacent sealant is to be painted, do not apply finish coats until sealant is applied.
   4. Vacuum clean surfaces of loose particles. Use tack cloth to remove dust and particles just prior to applying next coat.
   5. Install piping identification markers after painting has been completed according to the color coding schedule indicated.
   6. Paint colors, surface treatments, and finishes are indicated in the schedules located at the end of this Section.
   7. Do not paint over dirt, rust, scale, grease, moisture, scuffed surfaces, or conditions detrimental to formation of a durable paint film.
   8. Provide finish coats that are compatible with primers used.
   9. Finish edges, tops and bottoms of all doors the same as door faces. Both sides and all edges of doors to be finished simultaneously.
   10. The term "exposed surfaces" includes areas visible when permanent or built-in fixtures, convector covers, covers for finned-tube radiation, grilles, and similar components are in place. Extend coatings in these areas, as required, to maintain the system integrity and provide desired protection.
   11. Paint surfaces behind movable equipment and furniture the same as similar exposed surfaces. Before the final installation of movable equipment, paint surfaces behind permanently fixed equipment or furniture with prime coat only.
   12. Paint interior surfaces of ducts with a flat, nonspecular black paint where visible through registers or grilles.
   13. Finish exterior doors on tops, bottoms, and side edges the same as exterior faces.
   14. Finish interior of wall and base cabinets and similar field-finished casework to match exterior.
   15. Sand lightly between each succeeding enamel or varnish coat.

B. Scheduling Painting: Apply first coat to surfaces that have been cleaned, pre-treated, or otherwise prepared for painting as soon as practicable after preparation and before subsequent surface deterioration.

1. The number of coats required are the same regardless of application method. Do not apply succeeding coats until the previous coat has cured, as recommended by the manufacturer. If sanding is required to produce a smooth, even surface according to manufacturer's written instructions, sand between applications.
    a. Apply each coat in film thicknesses as recommended by the manufacturer.
2. Unless recommended by the manufacturer, omit primer on factory finished metal surfaces indicated to be field painted or metal surfaces that have been shop primed and touch-up painted.
3. If undercoats, stains, or other conditions show through final coat of paint, apply additional coats until paint film is of uniform finish, color, and appearance. Give special attention to ensure edges, corners, crevices, welds, and exposed fasteners receive a dry film thickness equivalent to that of flat surfaces.
4. Allow sufficient time between successive coats to permit proper drying. Do not recoat surfaces until paint has dried to where it feels firm, does not deform or feel sticky under moderate thumb pressure, and where application of another coat of paint does not cause the undercoat to lift or lose adhesion.

C. Application Procedures: Apply paints and coatings by brush, roller, spray, or other applicators according to manufacturer's written instructions.
1. Brushes: Use brushes best suited for the type of material applied. Use brush of appropriate size for the surface or item being painted.
2. Rollers: Use rollers of carpet, velvet back, or high-pile sheep's wool, as recommended by the manufacturer for the material and texture required.
3. Spray Equipment: Use airless spray equipment with orifice size and pressure, as recommended by the manufacturer for the material and texture required.

D. Minimum Coating Thickness: Apply paint materials no thinner than manufacturer's recommended spreading rate. Provide the total dry film thickness of each coat and of the entire system as recommended by the manufacturer.

3.4 FINISHING MECHANICAL AND ELECTRICAL EQUIPMENT

A. Electrical and mechanical items to be painted include the following, whether factory prefinished or not, with color selected by the ENGINEER:
1. Exterior mechanical and electrical equipment and accessories including, but not limited to, the following:
    a. Electrical and instrument panels, motor control centers, and switch gear.
    b. Electrical conduit and accessories.
    c. Transformers.
    d. Brackets.
    e. Meter enclosures.

f. Conduit.
g. Components that are visible or exposed to the weather.
h. Exhaust fans and blowers.

2. Exterior roof mounted mechanical and electrical equipment, any component of which is above adjacent parapets, including but not limited to, the following:
   a. Roof mounted HVAC units.
   b. Exhaust stacks, blowers, vents, etc.
   c. Miscellaneous steel support components for mechanical equipment screens.

B. Paint interior factory finished mechanical and electrical components selected by the ENGINEER from the manufacturer's standards, including, but not limited to, the following:
1. Piping (per color code and schedule), pipe hangers, and supports.
2. Duct work.
3. Duct throats behind grilles, registers, louvers, baffles, etc., shall be given one coat of flat acrylic latex (copolymer) black paint wherever visibility of the interior of the duct is allowed.
4. Switchboards.
5. Disconnect switches.
6. Pumps, motors, and mechanical equipment.
7. Gear reducers.
8. Accessory items.
9. Conduit and fittings (per color code and schedule).
10. Switchgear.
11. Panelboards.

C. Block Fillers: Apply block fillers to concrete masonry block at a rate to ensure complete coverage with pores filled.

D. Prime Coats: Before applying finish coats, apply a prime coat of material, as recommended by the manufacturer, to material that is required to be painted or finished and that has not been prime coated by others. Recoat primed and sealed surfaces where evidence of suction spots or unsealed areas in first coat appears, to ensure a finish coat with no burn through or other defects due to insufficient sealing.

E. Pigmented (Opaque) Finishes: Completely cover surfaces as necessary to provide a smooth, opaque surface of uniform finish, color, appearance, and coverage. Cloudiness, spotting, holidays, laps, brush marks, runs, sags, ropiness, or other surface imperfections will not be acceptable.

F. Transparent (Clear) Finishes: Use multiple coats to produce a glass smooth surface film of even luster. Provide a finish free of laps, runs, cloudiness, color irregularity, brush marks, orange peel, nail holes, or other surface imperfections.

G. Provide satin finish for final coats.

H. Stipple Enamel Finish: Roll and redistribute paint to an even and fine texture. Leave no evidence of rolling, such as laps, irregularity in texture, skid marks, or other surface imperfections.

I. Remove unfinished louvers, grilles, covers, and access panels on mechanical and electrical components and paint separately.

J. Reinstall electrical cover plates, hardware, light fixture trim, escutcheons, and fittings removed prior to finishing.

K. Paint both sides and edges of plywood backboards for electrical equipment before installing backboards and mounting equipment on them.

L. Completed Work: Match approved samples for color, texture, and coverage. Remove, refinish, or repaint work not complying with requirements.

3.5 FINISHING PROCESS EQUIPMENT AND FACILITIES

A. The following process equipment and facilities shall be painted according to this Specification, including, but not limited to, the following:
   1. Headworks Building: Paint control panels, disconnects, transmitters, all new above ground, buried, and immersed piping and fittings, all new valves, pipe supports, exposed ductwork, interior CMU walls, gypsum board walls and ceilings, ladders, hallow metal doors and frames, etc.
   2. Headworks odor control scrubber: Paint all new above ground, buried, and immersed piping and fittings, all new valves, and pipe supports, etc.
   3. Chemical storage and containment area: Paint new above ground, buried and immersed piping and fittings, all new valves and pipe supports, chemical metering pumps and appurtenances, etc.

3.6 CLEANING

A. Cleanup: At the end of each workday, remove empty cans, rags, rubbish, and other discarded paint materials from the site.
   1. After completing painting, clean glass and paint-spattered surfaces. Remove spattered paint by washing and scraping. Be careful not to scratch or damage adjacent finished surfaces.

3.7 PROTECTION

A. Protect work of other trades, whether being painted or not, against damage by painting. Correct damage by cleaning, repairing, or replacing and repainting, as approved by ENGINEER.

B. Provide "Wet Paint" signs to protect newly painted finishes. Remove temporary protective wrappings provided by others to protect their work after completing painting operations.
   1. At completion of construction activities of other trades, touch-up and restore damaged or defaced painted surfaces. Comply with procedures specified in PDCA P1.

3.8 FIELD QUALITY CONTROL

A. CONTRACTOR shall provide a written report from the manufacturer certifying that paint has been applied in accordance with the manufacturer's requirements

B. Provide ENGINEER with suitable testing materials in order for ENGINEER to carry out alkalinity and moisture tests prior to preparation and application.

C. Provide ENGINEER with the following testing equipment, accurately calibrated, for use by the ENGINEER prior to surface preparation and application.
   1. Tinker and Rasor Model M-1, K-D "Bird Dog", or equal, holiday detector, complete with necessary accessories.
   2. Microtest, Elcometer, or equal, magnetic dry film thickness gauge.
   3. Wet mil paint gauge for use during application.

D. The ENGINEER reserves the right to test surfaces, film thicknesses, and paint products at any time and as often as the ENGINEER deems necessary during the period when paint is being applied.
   1. Any spot measurement found below the required minimum dry film thickness shall be repainted by the CONTRACTOR in accordance with the manufacturer's instructions, at no additional cost to the OWNER.
   2. Do not paint unsatisfactory surfaces until they have been corrected and are in accordance with paint manufacturer's recommendations.

3.9 PIPE COLOR CODING AND IDENTIFICATION SCHEDULE

A. Install plastic pipe markers in accordance with manufacturer's instructions.

B. Install tags with corrosion resistance chain.

C. Locate identification markers and tags at the following locations:
   1. At each branch and riser takeoff.

a. At each pipe passage through a wall, floor, or ceiling.
b. On each horizontal and vertical pipe run at 25 foot intervals.

D. Exposed, non-submerged, interior piping shall be color coded and provided with identification markers as follows, unless directed otherwise by the ENGINEER:

Exposed Pipe Labels	Background Colors	Color of Letters
Air Piping:	John Deere Green	Black
Compressed Air:	John Deere Green	Black
Water Lines: Water - Potable Water - Non-Potable Permeate	 Light Blue Purple Dark Blue	 Black White Black
Exposed Electrical Conduits: 120 V / 480 V / 4,160 V (no label)	Match Background Color	None
Fire Quenching Materials: Water, Foam, CO2, Halon, Fire Hydrants, including sections of potable water for Fire Dept. access (no label)	Red	None
HVAC Duct Work:	Match Background Color	None
Sample Lines Piping:	Dark Blue	Black
Piping: Backwash Washwater Tank Drain / Sump Drain CIP	 Desert Sand Grey Dark Brown	 Black White White
Chemical Piping: Sodium Hypochlorite Citric Acid Sulfuric Acid Sodium Bisulfite Sodium Hydroxide ACH	 Yellow Yellow Yellow Yellow Yellow Yellow	 Black Black Black Black Black Black

E. Exposed piping, as defined earlier in this Specification, shall be color coded as listed above, except submerged pipes and pipes less than 3/8-inch diameter shall be painted the same as the wall or piece of equipment to which it is attached. Stainless steel pipe shall not be painted.

F. Positive identification of the contents of a piping system shall be lettered legibly, giving the name of the contents in full or abbreviated form at no greater than 25

foot intervals between markings. Arrows shall be used to indicate direction of flow at no greater than 10 foot intervals. Contents shall be identified by additional details required by the ENGINEER, such as temperature, pressure, etc., as necessary to identify the hazard.

G. Legend shall be brief and applied close to valves or flanges and adjacent to changes in direction, branches, and where pipes pass through walls or floors.

H. Where two or more pipes run parallel, markings shall be applied in the same relative location on each as to be in vertical or horizontal line and present a neat appearance.

I. In case a pipe is in such location that it can be seen only from one direction, such as pipes near a wall, two sets of the code designation shall be applied at each location, placed in two visible quadrants with respect to normal viewing positions.

Minimum Letter Sizes	
O.D. of Pipe (inches)	Height of Letters (inches)
3/4 - 1-1/4	1/2
1-1/2 - 2	3/4
2-1/2 - 6	1-1/4
8 - 10	2-1/2
Over 10	3-1/2

++ END OF SECTION ++

SECTION 09900.1

ARCHITECTURAL PAINTS AND COATINGS

PART 1 - GENERAL

1.1 SECTION INCLUDES

A. Paints and coatings for all work indicated on architectural drawings.

B. Surface preparation.

C. Field application of paints and varnishes.

D. Scope: Finish all interior and exterior surfaces exposed to view, unless fully factory-finished and unless otherwise indicated.

E. Do Not Paint or Finish the Following Items:
   1. Items fully factory-finished unless specifically so indicated; materials and products having factory-applied primers are not considered factory finished.
   2. Items indicated to receive other finishes.
   3. Items indicated to remain unfinished.
   4. Fire rating labels, equipment serial number and capacity labels, and operating parts of equipment.
   5. Floors, unless specifically so indicated.
   6. Ceramic and other tiles.
   7. Glass.
   8. Concealed pipes, ducts, and conduits.

1.2 REFERENCE STANDARDS

A. 40 CFR 59, Subpart D - National Volatile Organic Compound Emission Standards for Architectural Coatings; U.S. Environmental Protection Agency; current edition.

B. ASTM D4442 - Standard Test Methods for Direct Moisture Content Measurement of Wood and Wood-Based Materials; 2015.

1.3 SUBMITTALS

A. Product Data: Provide complete list of all products to be used, with the following information for each:
   1. Manufacturer's name, product name and/or catalog number, and general product category (e.g. "alkyd enamel").
   2. MPI product number (e.g. MPI #47).

3. Cross-reference to specified paint system(s) product is to be used in; include description of each system.
4. Manufacturer's installation instructions.
5. If proposal of substitutions is allowed under submittal procedures, explanation of all substitutions proposed.

B. Shop Drawings: Submit for approval the following:
1. A copy of this specification section, with addendum updates included, and all referenced and applicable sections, with addendum updates included, with each paragraph check-marked to indicate specification compliance or marked to indicate requested deviations from specification requirements. Check marks (✓) shall denote full compliance with a paragraph as a whole. If deviations from the specifications are indicated, and therefore requested by the CONTRACTOR, each deviation shall be underlined and denoted by a number in the margin to the right of the identified paragraph, referenced to a detailed written explanation of the reasons for requesting the deviation. The ENGINEER shall be the final authority for determining acceptability of requested deviations. The CONTRACTOR shall furnish equipment and/or services as specified if an exception and/or deviation is rejected. The remaining portions of the paragraph not underlined will signify compliance on the part of the CONTRACTOR with the specifications. Failure to include a copy of the marked-up specification sections, along with justification(s) for any requested deviations to the specification requirements, with the submittal shall be sufficient cause for rejection of the entire submittal with no further consideration.
2. The CONTRACTOR shall submit the preventive maintenance information package as part of the shop drawing submittal package to the ENGINEER for review and approval. **SHOP DRAWING SUBMITTAL PACKAGE WILL NOT BE APPROVED WITHOUT ACCEPTANCE OF PREVENTIVE MAINTENANCE INFORMATION.**

C. Maintenance Materials: Furnish the following for Owner's use in maintenance of project.
1. Extra Paint and Coatings: 1 gallon (4 L) of each color and type; store where directed.
2. Label each container with color in addition to the manufacturer's label.

1.4 DELIVERY, STORAGE, AND HANDLING

A. Deliver products to site in sealed and labeled containers; inspect to verify acceptability.

B. Container Label: Include manufacturer's name, type of paint, brand name, lot number, brand code, coverage, surface preparation, drying time, cleanup requirements, color designation, and instructions for mixing and reducing.

C. Paint Materials: Store at minimum ambient temperature of 45 degrees F (7 degrees C) and a maximum of 90 degrees F (32 degrees C), in ventilated area, and as required by manufacturer's instructions.

1.5 FIELD CONDITIONS

A. Do not apply materials when surface and ambient temperatures are outside the temperature ranges required by the paint product manufacturer.

B. Follow manufacturer's recommended procedures for producing best results, including testing of substrates, moisture in substrates, and humidity and temperature limitations.

C. Provide lighting level of 80 ft candles (860 lx) measured mid-height at substrate surface.

PART 2 - PRODUCTS

2.1 MANUFACTURERS

A. Provide all paint and coating products used in any individual system from the same manufacturer; no exceptions.

B. Provide all paint and coating products from the same manufacturer to the greatest extent possible.
   1. In the event that a single manufacturer cannot provide all specified products, minor exceptions will be permitted provided approval by Architect is obtained using the specified procedures for substitutions.

C. Paints:
   1. Base Manufacturer: Dunn-Edwards.

D. Primer Sealers: Same manufacturer as top coats.

E. Substitutions: See Section 01640 – Materials and Equipment.

2.2 PAINTS AND COATINGS - GENERAL

A. Paints and Coatings: Ready mixed, unless intended to be a field-catalyzed coating.
   1. Provide paints and coatings of a soft paste consistency, capable of being readily and uniformly dispersed to a homogeneous coating, with good flow and brushing properties, and capable of drying or curing free of streaks or sags.
   2. Provide materials that are compatible with one another and the substrates indicated under conditions of service and application, as demonstrated by manufacturer based on testing and field experience.

3. Supply each coating material in quantity required to complete entire project's work from a single production run.
4. Do not reduce, thin, or dilute coatings or add materials to coatings unless such procedure is specifically described in manufacturer's product instructions.

B. Primers: Where the manufacturer offers options on primers for a particular substrate, use primer categorized as "best" by the manufacturer.

C. Volatile Organic Compound (VOC) Content:
1. Provide coatings that comply with the most stringent requirements specified in the following:
   a. 40 CFR 59, Subpart D--National Volatile Organic Compound Emission Standards for Architectural Coatings.
   b. Architectural coatings VOC limits of Maricopa County.
2. Determination of VOC Content: Testing and calculation in accordance with 40 CFR 59, Subpart D (EPA Method 24), exclusive of colorants added to a tint base and water added at project site; or other method acceptable to authorities having jurisdiction.

D. Sheens: Provide the sheens specified; where sheen is not specified, sheen will be selected later by Architect from the manufacturer's full line.

E. Colors: As indicated on drawings
1. Selection to be made by Architect after award of contract.
2. Allow for minimum of two colors for each system, unless otherwise indicated, without additional cost to Owner.
3. In finished areas, finish pipes, ducts, conduit, and equipment the same color as the wall/ceiling they are mounted on/under.

2.3 PAINT SYSTEMS - EXTERIOR

A. Paint ME-OP-2L - Ferrous Metals, Primed, Latex, 2 Coat:
1. Touch-up with rust-inhibitive primer recommended by top coat manufacturer.
2. Gloss: Two coats of latex enamel.

2.4 PAINT SYSTEMS - INTERIOR

A. Paint I-OP - All Interior Surfaces Indicated to be Painted, Unless Otherwise Indicated: Including gypsum board, uncoated steel, shop primed steel, and galvanized steel.
1. Two top coats and one coat primer.
2. Top Coat(s): MPI High Performance Architectural Interior Latex; MPI #138-141.
3. Velvet: MPI gloss level 2; use this sheen at wall and ceiling surfaces.
4. Semi-Gloss: MPI gloss level 5; use this sheen at all other locations.
5. Primer(s): As recommended by manufacturer of top coats.

B. Paint I-OP-MD-DT - Medium Duty Door/Trim: For surfaces subject to frequent contact by occupants, including metals:
   1. Medium duty applications include door frames, railings, handrails, and guardrails
   2. Two top coats and one coat primer.
   3. Top Coat(s): MPI High Performance Architectural Interior Latex; MPI #139,140, 141.
   4. Semi-Gloss: MPI gloss level 5; use this sheen at all locations.

C. Paint I-OP-DF - Dry Fall: Metals; exposed structure and overhead-mounted services, including shop primed steel deck, structural steel, metal fabrications, galvanized ducts, galvanized conduit, and galvanized piping.
   1. Shop primer by others.
   2. One top coat; white.
   3. Top Coat: MPI Latex Dry Fall; MPI #118, 155, 226.
   4. Flat: MPI gloss level 1; use this sheen at all locations.

2.5 ACCESSORY MATERIALS

A. Accessory Materials: Provide all primers, sealers, cleaning agents, cleaning cloths, sanding materials, and clean-up materials required to achieve the finishes specified whether specifically indicated or not; commercial quality.

B. Patching Material: Latex filler.

C. Fastener Head Cover Material: Latex filler.

PART 3 - EXECUTION

3.1 EXAMINATION

A. Do not begin application of coatings until substrates have been properly prepared.

B. Verify that surfaces are ready to receive work as instructed by the product manufacturer.

C. Examine surfaces scheduled to be finished prior to commencement of work. Report any condition that may potentially affect proper application.

D. If substrate preparation is the responsibility of another installer, notify Architect of unsatisfactory preparation before proceeding.

E. Test shop-applied primer for compatibility with subsequent cover materials.

F. Measure moisture content of surfaces using an electronic moisture meter. Do not apply finishes unless moisture content of surfaces are below the following maximums:

1. Gypsum Wallboard: 12 percent.
2. Masonry, Concrete, and Concrete Unit Masonry: 12 percent.
3. Interior Wood: 15 percent, measured in accordance with ASTM D4442.

3.2 PREPARATION

A. Clean surfaces thoroughly and correct defects prior to coating application.

B. Prepare surfaces using the methods recommended by the manufacturer for achieving the best result for the substrate under the project conditions.

C. Remove or mask surface appurtenances, including electrical plates, hardware, light fixture trim, escutcheons, and fittings, prior to preparing surfaces or finishing.

D. Seal surfaces that might cause bleed through or staining of topcoat.

E. Remove mildew from impervious surfaces by scrubbing with solution of tetra-sodium phosphate and bleach. Rinse with clean water and allow surface to dry.

F. Galvanized Surfaces to be Painted: Remove surface contamination and oils and wash with solvent. Apply coat of etching primer.

G. Corroded Steel and Iron Surfaces to be Painted: Prepare using at least SSPC-PC 2 (hand tool cleaning) or SSPC-SP 3 (power tool cleaning) followed by SSPC-SP 1 (solvent cleaning).

H. Uncorroded Uncoated Steel and Iron Surfaces to be Painted: Remove grease, mill scale, weld splatter, dirt, and rust. Where heavy coatings of scale are evident, remove by hand or power tool wire brushing or sandblasting; clean by washing with solvent. Apply a treatment of phosphoric acid solution, ensuring weld joints, bolts, and nuts are similarly cleaned. Prime paint entire surface; spot prime after repairs.

I. Shop-Primed Steel Surfaces to be Finish Painted: Sand and scrape to remove loose primer and rust. Feather edges to make touch-up patches inconspicuous. Clean surfaces with solvent. Prime bare steel surfaces. Re-prime entire shop-primed item.

J. Metal Doors to be Painted: Prime metal door top and bottom edge surfaces.

3.3 APPLICATION

A. Remove unfinished louvers, grilles, covers, and access panels on mechanical and electrical components and paint separately.

B. Apply products in accordance with manufacturer's instructions.

C. Do not apply finishes to surfaces that are not dry. Allow applied coats to dry before next coat is applied.

D. Apply each coat to uniform appearance.

E. Dark Colors and Deep Clear Colors: Regardless of number of coats specified, apply as many coats as necessary for complete hide.

F. Sand wood and metal surfaces lightly between coats to achieve required finish.

G. Vacuum clean surfaces of loose particles. Use tack cloth to remove dust and particles just prior to applying next coat.

H. Reinstall electrical cover plates, hardware, light fixture trim, escutcheons, and fittings removed prior to finishing.

3.4 CLEANING

A. Collect waste material that could constitute a fire hazard, place in closed metal containers, and remove daily from site.

3.5 PROTECTION

A. Protect finished coatings until completion of project.

B. Touch-up damaged coatings after Substantial Completion.

++ END OF SECTION ++

SECTION 09910

PVC LINER

PART 1 - GENERAL

1.1 SUMMARY

A. This Section covers materials and installation of corrosion resistant liners for the Pre-stage Basin #2 Inlet Channel, and Bypass Channel.

1.2 SECTION INCLUDES

A. PVC liner.

1.3 RELATED SECTIONS

A. Section 01300, Submittals.

B. Section 01640, Materials and Equipment.

1.4 SUBMITTALS

A. Descriptive submittals shall be made in accordance with the Data Reference Symbols defined in Section 01300, Submittals.
   1. Shop Drawing and O&M Manuals: Liners and Coatings:
      a. Letters of Certification of Compliance on materials, equipment, etc.
      b. Samples.
      c. Final Certified Drawings showing outline dimensions, foundation layout or mounting information, and other pertinent dimensions.
      d. Field erection instructions, assembly drawings and/or diagrams, detailed reference drawing lists, lists of erection details, and list of spare parts supplied with equipment.
      e. Shop Detail Drawings showing individual sub- assemblies and fabricated pieces with material specifications and other applicable data.
      f. Installation instructions, operating and/or service manuals, and all other data pertinent to operating or servicing the complete apparatus. Preventative maintenance instructions and recommended frequency.
      g. General bulletins and catalog cuts describing complete apparatus, including operating principles and fundamentals.
      h. Service data sheets showing design performance, utility requirements, etc., as applicable to the specific duty for which the equipment is furnished.
      i. Materials of construction of all components.

j. Bearing manufacturer's standard identification and/or interchangeable number for all anti-friction bearings in the equipment proper and its accessory items.
k. Material gradation, design mix, job mix formula, and/or material analysis.

B. The CONTRACTOR shall submit a written certification of the applicator's qualifications to the ENGINEER for approval.

C. Each Shop Drawing Submittal shall include a hard copy of the relevant Specification Section and shall be clearly marked to indicate whether the requirements for equipment and/or services in the Specification Section are met by writing "accept" or "deviate" next to each Paragraph. If clarifications are needed to any of the Paragraphs in the Specification Sections due to deviations, they shall be addressed next to the Paragraph as such and explained further with any additional information necessary. If any exceptions and/or deviations are proposed to any of the Specifications, they shall be clearly noted as such in the Submittal, and an explanation of any deviation and/or exception shall be provided. The CONTRACTOR shall furnish equipment and/or services as specified if an exception and/or deviation is rejected. Failure to include a copy of the marked-up specification sections, along with justification(s) for any requested deviations to the specification requirements, with the submittal shall be sufficient cause for rejection of the entire submittal with no further consideration.

1.5 STORAGE

A. All lining materials shall be stored in an area according to manufacturer's recommendations.

B. The storage area shall be kept neat and clean. Floors and other surfaces shall be adequately protected. Any damage caused by the CONTRACTOR to surfaces in the storage area shall be thoroughly cleaned and repaired.

C. All oily rags, waste, etc., shall be placed in a covered material container and removed by the CONTRACTOR at the end of each shift.

1.6 WARRANTY

A. The liner manufacturers shall warrant the products being supplied to the OWNER against defects for a period of one year under normal use. The warranty shall be in printed form.

PART 2 - PRODUCTS

2.1 MATERIALS

A. The material to be used as a liner shall be a combination of inert, synthetic resins, pigments, and plasticizers, compounded to make permanently flexible sheets. The liner shall be T-Lock PVC sheet liner as manufactured by Ameron or approved equal.

B. The liner plate shall be resistant to oxidizing agents; sulfuric, phosphoric, nitric, chromic, oleic, and stearic acids; sodium and calcium hydroxides; ammonia; sodium, calcium, magnesium and ferric chlorides; ferric sulfate; petroleum oils and greases; vegetable and animal oils; fats; greases; and soaps. The liner plate shall be impermeable to sewage gases and liquids, and shall be nonconductive to bacterial and fungus growth. The lining shall have good impact resistance, shall be flexible, and shall have an elongation sufficient to bridge up to a 1/8-inch settling crack without damage. Once casted into the structure, the lining shall be permanently and physically (not adhesively) attached by the T-lock mechanism. The lining shall withstand a 40 psi hydrostatic back pressure applied to the under surface of the lining without losing anchorage or without rupture or leakage.

C. Dimensions and Tolerances:
   1. The liner plate shall not be less than 0.065-inch in thickness. Locking extensions shall be of the same material as the liner and shall be integrally extended with the sheets. If steel bands are used to secure the liner plate to the forms transversely, strap channels shall be integrally molded into the sheet.
   2. The liner plate shall be supplied as wall-size sheets fabricated by shop welding together the basic size sheets. Any joint straps shall be 4.0-inches ±0.25-inches in width and shall have the edges beveled at the time of manufacture. The welding straps shall be 1.0-inches +0.25-inches in width and shall have the edges beveled at the time of manufacture.

PART 3 - EXECUTION

3.1 INSTALLATION

A. The installation of the liner plate, including the welding of all joints, lap strips, flaps, etc., shall be done in accordance with the manufacturer's recommendations. Penetrations through the liner plate (i.e., anchor bolts) shall be installed according to the manufacturers recommendations. Liner plate shall be held snugly in place against inner forms by means of light gauge steel wire, light steel banding straps, or other suitable means. If steel banding straps are used, they shall be applied in strap channels provided for this purpose.

B. Locking extensions (T-shaped) shall be integrally extruded to all lower, terminal, or longitudinal edges of the liner plate as applied to the wall. If banding straps are used,

a steel rod 1/4-inch in diameter may be inserted in each locking extension along the longitudinal edges of each sheet of liner plate, or some other approved method for holding the lower edge of the liner plate snugly against the form shall be provided.

C. Concrete poured against the liner plate shall be compacted in a careful manner so as to protect the liner plate and to produce a dense, homogeneous concrete securely anchoring the lock extensions into the concrete. In removing the forms, care shall be taken to protect the liner plate from damage. Sharp instruments shall not be used to pry forms from lined surfaces. All holes and cut, torn, and seriously abraded areas in the liner plate shall be repaired and limited to patches which can be made with a single weld strip. Parallel, overlapping, or adjoining weld strips will not be allowed. Patches made entirely with welding strip shall be fused to the liner plate over the entire patch, and limited to patches which can be made with a single weld strip. Parallel, overlapping, or adjoining weld strips will not be allowed. Larger patches may consist of smooth liner plate applied over the damaged area with adhesive. All edges must be covered with welding strip fused to the patch and the sound liner plate adjoining the damaged area.

D. The CONTRACTOR shall take all necessary measures to prevent damage to the installed liner plate from equipment and materials used in or taken through the Work. The applied lining shall be free from bubbles caused by poor workmanship, and the CONTRACTOR shall cut out said bubbles and weld a similar sheet in place of the bubble unless otherwise directed by the ENGINEER.

E. The liner plate shall be set flush with the inner edge of the wall or to approximately 3-inches beyond the inner edge, depending upon the type of liner plate connection to be made with the adjoining concrete walls/ceiling. Wherever concrete walls, which are protected with liner plate, join structures cast-in-place manhole bases, or pipe, the liner plate shall be installed according to manufacturer's requirements. Where a pipe spur not of plastic material is installed through lined concrete walls the liner plate shall be installed according to manufacturer's recommendations. The CONTRACTOR shall provide Shop Drawings for approval by the ENGINEER.

F. If the joint space is too wide or the joint space surface too rough to allow satisfactory sealing with this method, the joint space shall be filled with 2-inches of densely-caulked lead wool or other approved caulking material. Lined concrete walls/ceiling may be cured by standard methods. Care shall be exercised in handling, transporting, and placing lined pre-cast structures to prevent damage to the liner plate. No interior hooks or slings shall be used in lifting pre-cast structures. No pre-cast structure with a damaged lining shall be accepted until the damage has been repaired to the satisfaction of the ENGINEER.

G. The CONTRACTOR shall obtain the services of qualified personnel to weld the liner plate field joints. Joints must be dry before the liner plate joints are made. All mortar and other foreign material shall be removed from the liner plate surfaces

adjacent to the joint, leaving them clean and dry. T-Lock supplier (Ameron) must be present for one day to supervise welding on T-Lock during construction.

H. Field joints in the liner plate at structure joints may be one of the following types:
   1. Type P-1: The joint shall be made with a separate 4-inch joint strip and two welding strips. The 4-inch strip shall be centered over the joint, secured to the liner plate with an approved method, or other approved means, and welded along each edge to the adjacent liner plate with a 1-inch weld strip. The width of the space between adjacent liner plate sheets shall not exceed 2-inches. The 4-inch joint strip shall lap over each liner plate a maximum of 1-inch.
   2. Type P-2: The joint shall be made with a plastic strip, without locking extensions integrally extruded with the liner plate and extending approximately 3-inches beyond the wall edge. A 1-inch welding strip is required. The joint strip shall overlay the liner plate a minimum of 1-inch on the side of the joint. An approved adhesive, or other approved means, shall be used to hold the lap in place during the welding. The joint strip shall be trimmed to a width, measured from the edge of the wall, of approximately 3-inches for the entire length of the liner. Distortion in bending back the strip to expose the pipe joint during the laying and joint mortaring shall be avoided. All welding of joints is to be in strict conformance with the liner plate manufacturer's specifications.
   3. Type P-4: The joint shall be made with a 3-inch weld strip. The 3-inch weld strip shall be centered over the joint and welded in place to the lining in adjacent joints. The weld strip shall lap over each liner plate a minimum of 1-inch.

I. T-Lock lining repair shall be per manufacturer’s recommendations.

3.2 SURFACE PREPARATION

A. Preparation for all new coating and lining systems shall be accomplished as specified herein and in accordance with the manufacturer's specifications. When sandblasting a surface to be coated, the CONTRACTOR shall protect all surrounding surfaces from sustaining any damage.

3.3 TESTING

A. All liner plate shall be tested with an approved electrical Holiday factory test at a minimum of 20,000 volts. All welds shall be physically tested by a non-destructive probing method. All patches over nail and form tie holes and repairs to the liner plate shall be done in conformance with the instructions and recommendations of the liner plate manufacturer.

++ END OF SECTION ++

SECTION 09920

COATING SYSTEMS

PART 1 - GENERAL

1.1 SUMMARY

A. Scope:
   1. This Section specifies the coating system used for following areas:
      a. All sanitary sewer manhole bases, barrels, and cones.
   2. The coating shall yield a hard, durable chemical resistant coating and shall be specifically designed to be applied on a dry surface. The finished coating shall provide a watertight seal and shall adhere to PVC and other components of the pipeline liner systems.

B. Definitions:
   1. Specific coating terminology used in this Section is in accordance with definitions contained in ASTM Dl6, ASTM D3960, and the following definitions:
      a. Dry Film Thickness (DFT): The thickness of one fully cured continuous application of coating.
      b. Field Coat: The application or the completion of application of the coating system after installation of the surface at the site of the Work.
      c. Shop Coat: One or more coats applied in a shop or plant prior to shipment to the site of erection or fabrication, where the field or finishing coat is applied.
      d. Tie Coat: An intermediate coat used to bond different types of paint coats. Coatings used to improve the adhesion of a succeeding coat.
      e. Photochemically Reactive Organic Material: Any organic material that will react with oxygen, excited oxygen, ozone, or other free radicals generated by the action of sunlight on components in the atmosphere giving rise to secondary contaminants and reaction intermediates in the atmosphere which can have detrimental effects.
      f. Volatile Organic Compound (VOC) Content: The portion of the coating that is a compound of carbon, is photochemically reactive, and evaporates during drying or curing; expressed in grams per liter or pounds per gallon.
      g. Touch-Up Painting: The application of a paint on areas of painted surfaces to repair marks, scratches, and areas where the coating has deteriorated to restore the coating film to an unbroken condition.

1.2 REFERENCES

A. References:

1. This Section contains references to the following documents. They are a part of this Section as specified and modified. In case of conflict between the requirements of this Section and those of the listed documents, the requirements of this Section shall prevail.
    a. ASTM D16 - Standard Terminology for Paint, Related Locations, Material and Applications Relating to Paint, Varnish, Lacquer, and Related Products.
    b. ASTM D3359 - Standard Test Methods for Measuring Adhesion by Tape Test.
    c. ASTM D3960 - Standard Practice for Determining Volatile Organic Compound (VOC) Content of Paints and Related Coatings.
    d. F 595 B - Federal Standard Colors.

1.3 DELIVERY AND STORAGE

A. Materials shall be delivered to the job site in their original, unopened containers. Each container shall bear the manufacturer's name, coating type, batch number, date of manufacture, storage life, and special directions.

B. Materials shall be stored in enclosed structures and shall be protected from weather and excessive heat or cold. Flammable materials shall be stored in accordance with State and local codes. Materials exceeding storage life recommended by the manufacturer shall be removed from the site.

PART 2 - PRODUCTS

2.1 MATERIALS

A. Standardization:
    1. Materials and supplies provided shall be the standard products of manufacturers. Materials in each coating system shall be the products of a single manufacturer.

B. Coating:
    1. The coating shall be Sauereisen Sewergard Lining No. 210 as manufactured by Sauereisen Cements, Pittsburgh, PA; The coating shall be Sewergard Beige in color. (OR)
    2. The coating shall be Sewer Shield 150 Epoxy Lining as manufactured by Environmental Coatings, Mesa, AZ.

C. Primer:
    1. Primer shall be as recommended by the manufacturer for each application.

D. Defect Filler:
    1. Defect filler shall be as recommended by the manufacturer for each application.

2.2 PRODUCT DATA

A. Before materials are delivered to the job site, the CONTRACTOR shall provide the following information in accordance with Section 01300, Submittals:
   1. For the filler, primer, and finish coating, the CONTRACTOR shall furnish a Material Safety Data Sheet (MSDS).
   2. For the filler and finish coating, the CONTRACTOR shall provide the manufacturer's application instructions, which shall include the following:
      a. Surface preparation recommendations.
      b. Primer type, where required.
      c. Maximum dry and wet mil thickness per coat.
      d. Minimum and maximum curing time between coats, including atmospheric conditions for each.
      e. Curing time before submergence in liquid.
      f. Thinner to be used with coating material.
      g. Ventilation requirements.
      h. Minimum atmospheric conditions during which the coating shall be applied.
      i. Allowable application methods.
      j. Maximum allowable moisture content.
      k. Maximum storage life.
   3. List of materials proposed to be used under this Section and manufacturer's data for each material.

PART 3 - EXECUTION

3.1 COATINGS

A. General:
   1. Coating products shall not be used until the ENGINEER has inspected the materials and the coating manufacturer's technical representative has instructed the CONTRACTOR and ENGINEER in the surface preparation, mixing, and application of the coating. The coating manufacturer's technical representative must be a factory representative, not a local representative or an affiliate of the CONTRACTOR.

B. Coating Systems:
   1. Field coats shall consist of one or more finish coats to build up the coating to the specified dry film thickness. Unless otherwise specified, finish coats shall not be applied until other Work in the area is complete and until all previous coats have been inspected.

C. Coating Requirements:
   1. All items of equipment, or parts and surfaces of equipment, which are immersed when in service, with the exception of pumps and valves, shall have all surface preparation and coating work performed in the field.

3.2 PREPARATION

A. General:

1. Concrete surfaces to receive protective coating shall be cast with rough form finish. Surfaces shall not be rubbed, troweled or otherwise finished in any manner that will obscure or cover the firm substrate surface. All subsequent surface washing, abrasive blasting, grinding, patching, filling and preparation shall be completed by the applicator in accordance with the protective coating manufacturer's recommendations. The CONTRACTOR shall examine all surfaces to be coated and shall correct all surface defects as specified in Paragraph 3.6 before application of any coating.
2. All concrete shall cure for 28 days before protective coating system is installed, unless otherwise recommended by the applicator or system manufacturer.
3. Substrate: Concrete surfaces to be coated shall be free of curing compounds and form release agents, laitance and foreign particles that may inhibit bonding. Prior to start of protective coating systems application, broom clean, vacuum, hydroblast or abrasive blast surfaces to be coated as required, and inspect the substrate. Start of application operations shall indicate acceptance of substrate conditions and full responsibility for the completed Work. Surface preparation procedures shall be in accordance with ICRI (International Concrete Repair Institute) Guideline No. 03732, or comparably approved method. Surface preparation requirement is to expose aggregate and obtain a uniform surface texture resembling an, ICRI CSP # 4-6 comparators.
4. Level or grind concrete substrates to manufacturer's recommended tolerances and to produce a smooth, uniform installation, including removal of all sharp edges, ridges or depressions.
5. New Concrete Application: New concrete voids and depressions shall be filled with underlayment material, re-establishing plan finished grades and surface profiles.
6. Existing Concrete Application: Existing concrete structures to receive protective coating system must be capable of withstanding imposed loads. All oil, grease and chemical containments must be removed from the surface of concrete by chemical cleaning. Surfaces must be firm, free of standing water, laitance, form release agents, and be structurally sound as determined by ARCHITECT/ENGINEER. Suitable surface preparation methods include shotblasting, abrasive blasting, or water jetting. Surface preparation procedures shall be in accordance with ICRI Guideline No. 03732. Surface preparation requirement is to expose aggregate and obtain a uniform surface texture resembling an, ICRI CSP # 4-6 comparators.
7. The CONTRACTOR shall perform an adhesion test after proper cure in accordance with ASTM D3359 to demonstrate that one the specified field coatings adhere to the substrate. Test results showing an adhesion rating of 5A on immersed surfaces and 4A or better on all other surfaces shall be considered acceptable. Where unacceptable test results are obtained, the

CONTRACTOR shall be responsible for removing and reapplying the specified coatings at no expense to the OWNER.

8. Steps within existing manholes shall be removed prior to surface preparation.
9. Manhole channels and benches shall be re-built through application of grout prior to coating and following surface preparation.

B. Detailed Surface Preparation:
   1. Surface preparations for each type of surface shall be in accordance with the specific requirements of the coating specification sheet (COATSPEC).

3.3 APPLICATION

A. Workmanship:
   1. Coated surfaces shall be free from runs, drops, ridges, waves, laps, and brush marks. Coats shall be applied so as to produce an even film of uniform thickness, completely coating corners and crevices. Painting shall be done in accordance with the requirements of SSPC Paint Application Specification No. 1.
   2. The CONTRACTOR'S equipment shall be designed for application of the materials specified. The coating shall be applied using a trowel suitable for obtaining the proper thickness and surface characteristics as recommended by the coating manufacturer.
   3. Each coat shall be applied evenly and sharply cut to line. Care shall be exercised to avoid over-coating or spattering on surfaces not to be coated.

B. Atmospheric Conditions:
   1. Coatings shall be applied only to surfaces that are dry and only under conditions of evaporation rather than condensation. Coatings shall not be applied during rainy, misty weather or to surfaces upon which there is frost or moisture condensation. During damp weather, when the temperature of the surface to be coated is within 10° F of the dew point, the surfaces shall be heated to prevent moisture condensation thereon. During coating and for a period of at least eight hours after the coating has been applied the temperature of the surfaces to be coated, the coated surfaces, and the atmosphere in contact shall be maintained at or above 40° F and 10° F above the dew point. Paint, when applied, shall be approximately the same temperature as that of the surface on which it is applied. Fans or heaters shall be used inside enclosed areas where conditions causing condensation are severe.

C. Protection of Coated Surfaces:
   1. Items which have been coated shall not be handled, worked on, or otherwise disturbed until the coating is completely dry and hard.

D. Film Thickness and Continuity:
   1. Coating system thickness is the total thickness of finish coats.

2. The surface area covered for various types of surfaces shall not exceed those recommended by the manufacturer. Coatings shall be applied to the thickness specified and in accordance with these Specifications.
3. In testing for continuity of coating about welds, projections (such as bolts and nuts), and crevices, the ENGINEER will determine the minimum conductivity for smooth areas of like coating where the dry mil thickness has been accepted. This conductivity shall then be taken as the minimum required for these rough or irregular areas. Pinholes and holidays shall be repainted to the required coverage.

E. Safety and Ventilation Requirements:
1. Requirements for safety and ventilation shall be in accordance with SSPC Paint Application Guide No. 3.

3.4 CLEANUP

A. Upon completion of coating, the CONTRACTOR shall remove surplus materials, protective coverings, and accumulated rubbish, and thoroughly clean all surfaces and repair any overspray or other paint-related damage.

3.5 COATING SYSTEM SPECIFICATION SHEETS COATSPEC - ALTERNATIVE 1)

A. Surfaces shall be coated in accordance with the COATSPEC to the system thickness specified.
1. Coating System Identification: Sewer Shield 150 Epoxy Lining.
2. Surface: Concrete/masonry.
3. Surface Preparation: Hydroblast abrasive blasting.
4. Concrete: Except as otherwise specified, loose concrete, form oils, surface hardeners, curing compounds, and laitance shall be removed from surfaces by abrasive blasting and chipping, and voids and cracks shall be repaired as specified in Paragraph 3.9 and as indicated by the underlayment paragraph. All active hydrostatic leaks must be stopped by use of a water stop, waterproofing, or urethane grout, as recommended by the manufacturer.
5. Underlayment: Holes and any other defects up to 4-inches deep shall be filled with C120 manufactured by Environmental Coatings. If the defects are larger than 4-inches deep, a high early cement fill shall be used. Loose or splattered underlayment shall be removed by scraping and chipping. The C120 and high early cement fill shall be applied as recommended by the manufacturer.
6. Application:
   a. Underlayment shall dry a minimum of five hours at 70° F prior to application of Sewer Shield 150.
   b. Coating shall be applied as recommended by the manufacturer, provided the coating as applied complies with prevailing air pollution control regulations.

c. Drying time between coats shall be as recommended by coating manufacturer.

7. System Thickness: 250 mils dry film.
8. Coatings: Coat at manufacturer's recommended dry film thickness per coat to the specified system thickness.

3.6 COATING SYSTEM SPECIFICATION SHEETS (COATSPEC - ALTERNATIVE 2)

A. Surfaces shall be coated in accordance with the COATSPEC to the system thickness specified.
   1. Coating System Identification: Sauereisen SewerGard No. 210 Trowelable.
   2. Surface: Concrete/masonry.
   3. Surface Preparation: Abrasive blasting or hydroblasting.
   4. Concrete: Except as otherwise specified, loose concrete, form oils, surface hardeners, curing compounds, laitance oils, grease, dust, chemical contaminants, and any previously applied coatings shall be removed from surfaces by abrasive blasting or hydroblasting, and voids and cracks shall be repaired as specified in Paragraph 3.9 and as indicated by the underlayment paragraph. After blasting, concrete should be detergent washed to remove all oil, grease, and other contaminants. All active hydrostatic leaks must be stopped by use of an appropriate Sauereisen water stop, waterproofing, or urethane grout, as recommended by the manufacturer.
   5. Underlayment: Sauereisen No. F-120 Trowelable shall be used to fill holes and any other defects. Loose or splattered underlayment shall be removed by scraping and chipping. Sauereisen No. F-120 Trowelable shall be applied as recommended by the manufacturer.
   6. Application:
      a. Underlayment shall dry a minimum of five hours at 70° F prior to the application of SewerGard No. 210 Trowelable. Underlayment must be cured by means of fog spray, wet burlap, or appropriate Sauereisen curing compound. The CONTRACTOR shall follow coating manufacturer's requirements for bonding the coating systems to the installed sewer liner.
      b. Coating shall be applied as recommended by the manufacturer, provided the coating as applied complies with prevailing air pollution control regulations. Only one coat should be applied to obtain the system thickness. The CONTRACTOR shall follow coating manufacturer's requirements for bonding the coating system to the installed liner.
   7. System Thickness: 125 mils dry film.
   8. Coatings: Coats at manufacturer's recommended dry film thickness per coat to the specified system thickness.

3.7 SPARK TEST

A. All coated surfaces shall be spark tested for holes. The spark tester used shall provide 15,000 to 20,000 volts. If pinholes are found, the CONTRACTOR shall repair the coating as recommended by the manufacturer and retest. All testing and repair work shall be at the CONTRACTOR'S expense.

3.8 DEFECT REPAIR OF CONCRETE SURFACE

A. All surface defects, including tie holds, minor honeycombing, or otherwise defective concrete, shall be repaired. All voids, holes, rough, or irregular concrete shall be filled.

B. The CONTRACTOR shall use the repair and fill material recommended by the coating manufacturer to repair or fill all defects. Areas to be patched shall be cleaned. Minor honeycombed or otherwise defective areas shall be cut out to solid concrete to a depth of at least 1-inch. The edges of the cut shall be perpendicular to the surface of the concrete. Patches on exposed surfaces shall be finished to match the adjoining surfaces after they have set. Finishes shall be equal in workmanship, texture, and general appearance to that of the adjacent concrete. Concrete with honeycombing, which exposes the reinforcing steel, or with defects which affect the structural strength, shall be corrected.

3.9 WARRANTY

A. The coating applicator shall supply a five year warranty on workmanship of installation. The warranty shall state, at a minimum, that the coating is applied in accordance with the manufacturer's instruction and that the coating will not fail for a period of five years. The definition of coating failure is that blistering, cracking, embrittlement, or softening of the coating is starting to occur. The warranty shall be unconditional in nature covering any type of failure in the coating and agree to repair or replace it at no cost to OWNER at any point during this five year period. The warranty shall cover all costs, but not be limited to the cost of coating replacement, including the material costs and the labor costs associated with surface preparation and installing the replacement coating.

B. The coating applicator shall also supply a warranty from the coating manufacturer to warrant the product from failure for a period of five years. The definition of coating failure is that blistering, cracking, embrittlement, or softening of the coating is starting to occur.

++ END OF SECTION ++

SECTION 09920

MEMBRANE FACILITY COATING SYSTEMS

PART 1 - GENERAL

1.1 SUMMARY

A. Scope:
   1. This Section specifies the coating system used for following areas:
      a. Membrane basin
      b. CIP tank
   2. The coating shall yield a hard, durable chemical resistant coating and shall be specifically designed to be applied on a dry surface. The finished coating shall provide a watertight seal and shall adhere to PVC and other components of the pipeline liner systems.

B. Definitions:
   1. Specific coating terminology used in this Section is in accordance with definitions contained in ASTM Dl6, ASTM D3960, and the following definitions:
      a. Dry Film Thickness (DFT): The thickness of one fully cured continuous application of coating.
      b. Field Coat: The application or the completion of application of the coating system after installation of the surface at the site of the Work.
      c. Shop Coat: One or more coats applied in a shop or plant prior to shipment to the site of erection or fabrication, where the field or finishing coat is applied.
      d. Tie Coat: An intermediate coat used to bond different types of paint coats. Coatings used to improve the adhesion of a succeeding coat.
      e. Photochemically Reactive Organic Material: Any organic material that will react with oxygen, excited oxygen, ozone, or other free radicals generated by the action of sunlight on components in the atmosphere giving rise to secondary contaminants and reaction intermediates in the atmosphere which can have detrimental effects.
      f. Volatile Organic Compound (VOC) Content: The portion of the coating that is a compound of carbon, is photochemically reactive, and evaporates during drying or curing; expressed in grams per liter or pounds per gallon.
      g. Touch-Up Painting: The application of a paint on areas of painted surfaces to repair marks, scratches, and areas where the coating has deteriorated to restore the coating film to an unbroken condition.

1.2 REFERENCES

A. References:

1. This Section contains references to the following documents. They are a part of this Section as specified and modified. In case of conflict between the requirements of this Section and those of the listed documents, the requirements of this Section shall prevail.
    a. ASTM D16 - Standard Terminology for Paint, Related Locations, Material and Applications Relating to Paint, Varnish, Lacquer, and Related Products.
    b. ASTM D3359 - Standard Test Methods for Measuring Adhesion by Tape Test.
    c. ASTM D3960 - Standard Practice for Determining Volatile Organic Compound (VOC) Content of Paints and Related Coatings.
    d. F 595 B - Federal Standard Colors.

1.3 DELIVERY AND STORAGE

A. Materials shall be delivered to the job site in their original, unopened containers. Each container shall bear the manufacturer's name, coating type, batch number, date of manufacture, storage life, and special directions.

B. Materials shall be stored in enclosed structures and shall be protected from weather and excessive heat or cold. Flammable materials shall be stored in accordance with State and local codes. Materials exceeding storage life recommended by the manufacturer shall be removed from the site.

PART 2 - PRODUCTS

2.1 MATERIALS

A. Standardization:
    1. Materials and supplies provided shall be the standard products of manufacturers. Materials in each coating system shall be the products of a single manufacturer.

B. Coating shall be Sherwin-Williams Company Flexible Corrosion Protection Lining:
    1. Structural Lining and Flexible Corrosion Protection lining:
        a. Repair/Patching and Structural Linings: Epoxy Repair/Resurfacer (Steel)/Structural Lining Repair Mortars (Concrete) Stopping Leaks
    2. Primer:
        a. Dura-Plate 235 Multi-Purpose Epoxy or PW
        b. Coat Thickness: 3.0-5.0 mils
    3. Corrosion Protection Coating
        a. SHERFLEX Polyurethane Elastomer
        b. Coat Thickness: 80.0 to 100.0 mils

2.2 PRODUCT DATA

A. Before materials are delivered to the job site, the CONTRACTOR shall provide the following information in accordance with Section 01300, Submittals:
   1. For the filler, primer, and finish coating, the CONTRACTOR shall furnish a Material Safety Data Sheet (MSDS).
   2. For the filler and finish coating, the CONTRACTOR shall provide the manufacturer's application instructions, which shall include the following:
      a. Surface preparation recommendations.
      b. Primer type, where required.
      c. Maximum dry and wet mil thickness per coat.
      d. Minimum and maximum curing time between coats, including atmospheric conditions for each.
      e. Curing time before submergence in liquid.
      f. Thinner to be used with coating material.
      g. Ventilation requirements.
      h. Minimum atmospheric conditions during which the coating shall be applied.
      i. Allowable application methods.
      j. Maximum allowable moisture content.
      k. Maximum storage life.
   3. List of materials proposed to be used under this Section and manufacturer's data for each material.

PART 3 - EXECUTION

3.1 COATINGS

A. General:
   1. Coating products shall not be used until the ENGINEER has inspected the materials and the coating manufacturer's technical representative has instructed the CONTRACTOR and ENGINEER in the surface preparation, mixing, and application of the coating. The coating manufacturer's technical representative must be a factory representative, not a local representative or an affiliate of the CONTRACTOR.

B. Coating Systems:
   1. Field coats shall consist of one or more finish coats to build up the coating to the specified dry film thickness. Unless otherwise specified, finish coats shall not be applied until other Work in the area is complete and until all previous coats have been inspected.

C. Coating Requirements:
   1. All items of equipment, or parts and surfaces of equipment, which are immersed when in service, with the exception of pumps and valves, shall have all surface preparation and coating work performed in the field.

3.2 PREPARATION

A. General:

1. Concrete surfaces to receive protective coating shall be cast with rough form finish. Surfaces shall not be rubbed, troweled or otherwise finished in any manner that will obscure or cover the firm substrate surface. All subsequent surface washing, abrasive blasting, grinding, patching, filling and preparation shall be completed by the applicator in accordance with the protective coating manufacturer's recommendations. The CONTRACTOR shall examine all surfaces to be coated and shall correct all surface defects as before application of any coating.
2. All concrete shall cure for 28 days before protective coating system is installed, unless otherwise recommended by the applicator or system manufacturer.
3. Substrate: Concrete surfaces to be coated shall be free of curing compounds and form release agents, laitance and foreign particles that may inhibit bonding. Prior to start of protective coating systems application, broom clean, vacuum, hydroblast or abrasive blast surfaces to be coated as required, and inspect the substrate. Start of application operations shall indicate acceptance of substrate conditions and full responsibility for the completed Work. Surface preparation procedures shall be in accordance with ICRI (International Concrete Repair Institute) Guideline No. 03732, or comparably approved method. Surface preparation requirement is to expose aggregate and obtain a uniform surface texture resembling an, ICRI CSP # 4-6 comparators.
4. Level or grind concrete substrates to manufacturer's recommended tolerances and to produce a smooth, uniform installation, including removal of all sharp edges, ridges or depressions.
5. New Concrete Application: New concrete voids and depressions shall be filled with underlayment material, re-establishing plan finished grades and surface profiles.
6. Existing Concrete Application: Existing concrete structures to receive protective coating system must be capable of withstanding imposed loads. All oil, grease and chemical containments must be removed from the surface of concrete by chemical cleaning. Surfaces must be firm, free of standing water, laitance, form release agents, and be structurally sound as determined by ARCHITECT/ENGINEER. Suitable surface preparation methods include shotblasting, abrasive blasting, or water jetting. Surface preparation procedures shall be in accordance with ICRI Guideline No. 03732. Surface preparation requirement is to expose aggregate and obtain a uniform surface texture resembling an, ICRI CSP # 4-6 comparators.
7. The CONTRACTOR shall perform an adhesion test after proper cure in accordance with ASTM D3359 to demonstrate that one the specified field coatings adhere to the substrate. Test results showing an adhesion rating of 5A on immersed surfaces and 4A or better on all other surfaces shall be considered acceptable. Where unacceptable test results are obtained, the

CONTRACTOR shall be responsible for removing and reapplying the specified coatings at no expense to the OWNER.

8. Steps within existing manholes shall be removed prior to surface preparation.
9. Manhole channels and benches shall be re-built through application of grout prior to coating and following surface preparation.

B. Detailed Surface Preparation:
   1. Surface preparations for each type of surface shall be in accordance with the specific requirements of the coating specification sheet (COATSPEC).

3.3 APPLICATION

A. Workmanship:
   1. Coated surfaces shall be free from runs, drops, ridges, waves, laps, and brush marks. Coats shall be applied so as to produce an even film of uniform thickness, completely coating corners and crevices. Painting shall be done in accordance with the requirements of SSPC Paint Application Specification No. 1.
   2. The CONTRACTOR'S equipment shall be designed for application of the materials specified. The coating shall be applied using a trowel suitable for obtaining the proper thickness and surface characteristics as recommended by the coating manufacturer.
   3. Each coat shall be applied evenly and sharply cut to line. Care shall be exercised to avoid over-coating or spattering on surfaces not to be coated.

B. Atmospheric Conditions:
   1. Coatings shall be applied only to surfaces that are dry and only under conditions of evaporation rather than condensation. Coatings shall not be applied during rainy, misty weather or to surfaces upon which there is frost or moisture condensation. During damp weather, when the temperature of the surface to be coated is within 10° F of the dew point, the surfaces shall be heated to prevent moisture condensation thereon. During coating and for a period of at least eight hours after the coating has been applied the temperature of the surfaces to be coated, the coated surfaces, and the atmosphere in contact shall be maintained at or above 40° F and 10° F above the dew point. Paint, when applied, shall be approximately the same temperature as that of the surface on which it is applied. Fans or heaters shall be used inside enclosed areas where conditions causing condensation are severe.

C. Protection of Coated Surfaces:
   1. Items which have been coated shall not be handled, worked on, or otherwise disturbed until the coating is completely dry and hard.

D. Film Thickness and Continuity:
   1. Coating system thickness is the total thickness of finish coats.

2. The surface area covered for various types of surfaces shall not exceed those recommended by the manufacturer. Coatings shall be applied to the thickness specified and in accordance with these Specifications.
3. In testing for continuity of coating about welds, projections (such as bolts and nuts), and crevices, the ENGINEER will determine the minimum conductivity for smooth areas of like coating where the dry mil thickness has been accepted. This conductivity shall then be taken as the minimum required for these rough or irregular areas. Pinholes and holidays shall be repainted to the required coverage.

E. Safety and Ventilation Requirements:
1. Requirements for safety and ventilation shall be in accordance with SSPC Paint Application Guide No. 3.

3.4 CLEANUP

A. Upon completion of coating, the CONTRACTOR shall remove surplus materials, protective coverings, and accumulated rubbish, and thoroughly clean all surfaces and repair any overspray or other paint-related damage.

3.5 SPARK TEST

A. All coated surfaces shall be spark tested for holes. The spark tester used shall provide 15,000 to 20,000 volts. If pinholes are found, the CONTRACTOR shall repair the coating as recommended by the manufacturer and retest. All testing and repair work shall be at the CONTRACTOR'S expense.

3.6 DEFECT REPAIR OF CONCRETE SURFACE

A. All surface defects, including tie holds, minor honeycombing, or otherwise defective concrete, shall be repaired. All voids, holes, rough, or irregular concrete shall be filled.

B. The CONTRACTOR shall use the repair and fill material recommended by the coating manufacturer to repair or fill all defects. Areas to be patched shall be cleaned. Minor honeycombed or otherwise defective areas shall be cut out to solid concrete to a depth of at least 1-inch. The edges of the cut shall be perpendicular to the surface of the concrete. Patches on exposed surfaces shall be finished to match the adjoining surfaces after they have set. Finishes shall be equal in workmanship, texture, and general appearance to that of the adjacent concrete. Concrete with honeycombing, which exposes the reinforcing steel, or with defects which affect the structural strength, shall be corrected.

3.7 WARRANTY

A. The coating applicator shall supply a five year warranty on workmanship of installation. The warranty shall state, at a minimum, that the coating is applied in accordance with the manufacturer's instruction and that the coating will not fail for a period of five years. The definition of coating failure is that blistering, cracking, embrittlement, or softening of the coating is starting to occur. The warranty shall be unconditional in nature covering any type of failure in the coating and agree to repair or replace it at no cost to OWNER at any point during this five year period. The warranty shall cover all costs, but not be limited to the cost of coating replacement, including the material costs and the labor costs associated with surface preparation and installing the replacement coating.

B. The coating applicator shall also supply a warranty from the coating manufacturer to warrant the product from failure for a period of five years. The definition of coating failure is that blistering, cracking, embrittlement, or softening of the coating is starting to occur.

++ END OF SECTION ++

SECTION 09983

VINYL ESTER WITH GRAPHITE LINING SYSTEM

PART 1 - GENERAL

1.1 SUMMARY

A. Scope:
   1. Provide all labor, materials, tools, equipment and incidentals as shown on the Drawings, specified and required to furnish, install and place into satisfactory service the vinyl ester with graphite lining corrosion protection system. The Work also includes:
      a. Providing openings in the vinyl ester with graphite lining corrosion protection system to accommodate the Work under this and other Sections, and building into the vinyl ester with graphite lining corrosion protection system all items such as sleeves, anchor bolts, inserts and all other items to be embedded in, or inserted through, the vinyl ester with graphite lining corrosion protection system for which placement is not specifically provided under other Sections.
      b. All systems include scarification, acid etching and other substrate preparations, bond coats, reinforcements, underlayment fills, moisture barrier coatings, binder coats, top coats, sealants and other components and system accessories recommended by the manufacturer for cast-in-place concrete floor slabs, curbs, equipment pads, tops and sides of containment walls, trenches, steps sumps, equipment pits and similar cast-in-place concrete items, described in Part 2 below.
      c. Provide a vinyl ester with graphite lining corrosion protection system at the chemical storage facilities in the chemical storage areas, as shown on the Drawings.
      d. Include manufacturer's recommended details for conditions encountered in the Work and a Field Quality Control Report, including procedures, test methods, results of tests, remedial recommendations and actions.
      e. Provide complete technical services, as available from the manufacturer, and on-site technical representation by manufacturer's technical representative during the time of material delivery, storage, mock-up, substrate preparation and the advancement of installation to thirty percent of floor areas receiving concrete vinyl ester with graphite lining corrosion protection system and during the start of field quality control testing.
   2. Extent of the vinyl ester with graphite lining corrosion protection system is shown on the Drawings and, in addition, includes the following:
      a. Bulk Containment Area (Sodium Hypochlorite, Citric Acid, Sulfuric Acid, Sodium Bisulfite, Sodium Hydroxide, and Aluminum Chlorohydrate):

1) Floors, all equipment pads and supports, and walls up to the potential maximum liquid level.

b. Feed Area (Sodium Hypochlorite, Citric Acid, Sulfuric Acid, Sodium Bisulfite, Sodium Hydroxide, and Aluminum Chlorohydrate Soda):
   1) Floors, equipment pads and supports and walls/curbing up to 8-inches.

c. Bottoms and sides of all trench drains and horizontal pipe chases containing pipes transferring solutions from containment areas to point of use and all horizontal pipe chases within the containment areas.

3. Types of products required include the following:
   a. The vinyl ester with graphite lining corrosion protection system shall be a two component, 100 percent solids, solvent-free, catalyzed vinyl ester resin, graphite-filled high-build protective and waterproofing coating. Concrete surface primer shall be a catalyzed vinyl ester resin containing conductive fillers, 100 percent solids content. Sealants are two component epoxy and two component polysulfide. Moisture barrier coating shall be two component polyurethane. Finish coats shall be a two component, 100 percent solids, solvent-free, catalyzed, graphite- filled vinyl ester resin.
   b. The vinyl ester with graphite lining corrosion system shall be a two component, 100 percent solids, solvent-free, catalyzed, graphite-filled, vinyl ester resin, fiberglass mat reinforced rigid basecoat, high-build protective and waterproofing lining. Concrete surface primer shall be catalyzed vinyl ester resin containing conductive fillers, 100 percent solids content. Rigid basecoat with reinforcement shall be vinyl ester resin with silica fillers and chopped strand fiberglass mat. Saturant for reinforcement shall be catalyzed vinyl ester resin. Sealants are two component epoxy and two component polysulfide. Moisture barrier coating shall be two component polyurethane. Finish coats shall be two component, 100 percent solids, graphite-filled, vinyl ester resin.
   c. The vinyl ester with graphite lining corrosion protection system shall be a two component, 100 percent solids, solvent-free, vinyl ester resin, graphite-filled, chopped strand fiberglass mat, flexible basecoat, high-build protective and waterproofing lining. Concrete surface primer shall be a catalyzed vinyl ester resin containing graphite fillers, 100 percent solids content. Flexible basecoat with reinforcement shall be an epoxy resin with graphite fillers and vinyl ester. Saturant for reinforcement shall be vinyl ester resin. Sealants are two component epoxy and two component polysulfide. Moisture barrier coating shall be two component polyurethane. Finish coats shall be a two component, 100 percent solids, graphite-filled, vinyl ester resin.

B. Coordination:

1. Review installation procedures under other Sections and coordinate the installation of items that must be installed with, or before, the vinyl ester with graphite lining corrosion protection system.
2. Coordinate and schedule preparation of substrates, before equipment and similar items are installed to avoid later difficulty, or delay, in performing the Work of this Section, and to provide substrates within tolerances and surface profile specified.
3. Coordinate and schedule abrasive blasting of substrates to avoid later difficulty or delay in performing the Work.
4. Coordinate the setting of drains and other items in compliance with the recommended details of the vinyl ester with graphite lining corrosion protection system manufacturer for complete product responsibility.
5. Coordinate installation of reinforced epoxy resin topping corrosion protection system on existing surfaces with OWNER'S maintenance and operations staff.

1.2 QUALITY ASSURANCE

A. Installer Qualifications:
   1. Engage a single installer, certified or licensed by the vinyl ester with graphite lining corrosion protection system manufacturer, regularly performing trowel-applied lining installation, and with documented skill and successful experience in the installation of the types of materials required; and who agrees to employee only tradesmen who are trained, skilled and have successful experience in installing the types of materials specified.
   2. Pointing subcontractors who submissions indicate that they have not had the experience required to perform the Work shall not be approved. Qualifying experience shall include at least three previous projects of similar magnitude and complexity to this project that have been completed not less than 18 months prior to submission of qualifications to ENGINEER.
   3. Submit name and qualifications to ENGINEER along with the following information on a minimum of three successful projects:
      a. Names and telephone numbers of owners, architects or Engineer’s responsible for projects.
      b. Approximate contract cost of the vinyl ester with graphite lining corrosion protection system.
      c. Amount of area installed.
   4. Submit proof of acceptability of installer by manufacturer to ENGINEER.
   5. Only installers that have written documentation for the manufacture are approved to install protective lining system. All other personnel that will be installing the lining must also be approved by the manufacture and they will be the only ones to can install the system.
   6. The protection system applicator shall submit a satisfactory experience record including references for previous application of the specified protection system to concrete structures of similar design and complexity. The material manufacturer shall approve the applicator in writing.

B. Testing Agency Qualifications: To qualify for approval, an independent testing agency shall demonstrate to ENGINEER'S satisfaction, based on evaluation of criteria submitted by testing agency, that it has the experience and capability to satisfactorily conduct the testing indicated, in accordance with ASTM E 329 and as documented according to ASTM E 548, without delaying the Work.

C. Requirements of Regulatory Agencies: Surface preparation and application of coatings shall be performed by CONTRACTOR in compliance with all applicable federal, state and local occupational safety and health regulations and Air Quality. Obtain and comply with all safety precautions recommended by the paint manufacturer in printed instructions or special bulletins and as required by applicable regulations. Provide forced ventilation in all areas where inadequate ventilation exists.
   1. Painting systems for surfaces in contact with potable water, or water being treated for potable use, shall be NSF approved and shall not impart any taste or odor to the water or result in any organic or inorganic content in excess of the maximum allowable contaminant level established by governing authorities having jurisdiction. All such painting systems shall be approved by the applicable regulatory agency. CONTRACTOR revise painting systems specified herein to provide manufacturer's regulatory agency approved painting system(s) where required.
   2. Comply with the regulations of governing authorities having jurisdiction for air quality and material disposal regulations. Revise painting systems specified herein in order to provide manufacturer's regulatory agency approved painting systems, where required.
3. Comply with governing authorities having jurisdiction for blast cleaning operations, confined space entry and disposition of spent abrasive and debris.

D. Source Quality Control:
   1. Engage a single manufacturer who shall furnish the services of a technical representative to assist CONTRACTOR, ENGINEER and OWNER by providing technical opinions on the adequacy of materials and methods of installation and site quality control testing. The vinyl ester with graphite lining corrosion protection system material manufacturer shall provide engineering field services to review the project and the material application prior to surface preparation: to approve the applicator, the materials used, and the procedure to be used; to provide the minimum pull-off adhesion strength, when testing for adhesion; to observe and approve surface preparation; and to observe application. The field representative of the vinyl ester with graphite lining corrosion protection system material manufacturer shall submit, through CONTRACTOR, written approvals of the proposed protection system materials, application procedures, applicator, and surface preparation. The engineering field representative shall be an employee of the material manufacturer.

2. Furnish such services during the time of delivery, storage, mock-up installation, installation and on-site quality control testing of all vinyl ester with graphite lining corrosion protection system components.
3. Engage a manufacturer who will provide complete technical services including preparation and review of Shop Drawings, installation methods and proposed detailing.
4. Provide all components of the vinyl ester with graphite lining corrosion protection system produced by a single manufacturer, including recommended primers, base coat, chopped strand fiberglass mat, sealants and topcoat materials.
5. Certify product shelf life history for each system component. Do not use resins and catalysts manufactured more than six months prior to the time they will be incorporated into the Work.
6. Certify that all vinyl ester with graphite lining corrosion protection system materials have been stored in full compliance with all storage recommendations of the vinyl ester with graphite lining corrosion protection system manufacturer and that resins, catalysts and other sensitive auxiliary system components have been constantly stored between 50° and 75°F, and have not, nor will be, subjected to freezing temperatures.

E. Performance Criteria:
1. Manufacturers of "or equal" products shall provide direct property comparison with the materials specified in addition to complying with all other requirements of the Specifications. "Or equal" products shall employ the same generic materials and system components as the vinyl ester with graphite lining corrosion protection system specified.
2. CONTRACTOR'S Review: Submit to ENGINEER a written statement signed by CONTRACTOR, stating that the Contract Documents have been reviewed with the vinyl ester with graphite lining corrosion protection system material manufacturer who confirms that, if properly installed, the specified system is capable of providing performance criteria specified, is appropriate for installation shown on the Drawings and that the details proposed for use in the Work are not in conflict with the manufacturer's details.
3. Statement of Application: Upon completion of the vinyl ester with graphite lining corrosion protection system Work, certify to ENGINEER and OWNER that the Work complies with the requirements of this Section, was installed in compliance with manufacturer's written recommendations, and that the installation methods were proper and adequate for the conditions of installation and use.

F. Manufacturer's Field Services
1. The applicator of the protection system shall contact the protection system material manufacturer during the bidding phase of the Project and shall include in the cost of this Work the estimated cost of the manufacturer's engineering field services as specified.

2. The field services provided by the material manufacturer shall include review of the Project before surface preparation; approving the applicator, the materials, and the procedure to be used; provide the adhesion testing, if testing for adhesion is required to determine compliance with the specified minimum pull-off adhesion strength; observation and approval of the surface preparation; and observing the application. The field representative of the protection system material manufacturer shall submit, through CONTRACTOR, written approvals of the proposed protection system materials, application procedures, applicator, and surface preparation. The field representative shall be an employee of the material manufacturer.
3. CONTRACTOR shall notify the material manufacturer and ENGINEER at least 10 days prior to anticipated date of placement of the protection system.
4. The field representative shall be an employee the material manufacturer.
5. Deficiencies in the coatings system, if any, noted by the manufacturer during final inspection shall be defined in the manufacturer's report including corrective measures to be implemented by CONTRACTOR at CONTRACTOR'S expense. Following corrective measures by CONTRACTOR, manufacturer shall re-inspect the Work, at CONTRACTOR'S expense and within seven days after re-inspection, provide a written report from the manufacturer certifying the coatings have been applied properly and in accordance with the manufacturer's recommendations and requirements.

G. Referenced Standards: Comply with applicable provisions and recommendations of the following, except where otherwise shown or specified.
1. ASTM C 307, Test Method for Tensile Strength of Chemical-Resistant Mortar, Grouts and Monolithic Surfacings.
2. ASTM C 579, Test Method for Compressive Strength of Chemical-Resistant Mortars, Grouts, Monolithic Surfacings and Polymer Concretes.
3. ASTM D 635, Test Method for Rate of Burning and/or Extent and Time of Burning of Self-Supporting Plastics in a Horizontal Position.
4. ASTM D 696, Test Method for Coefficient of Linear Thermal Expansion of Plastics.
5. ASTM D 2200, Pictorial Surface Preparation Standards for Painting Steel Surfaces.
6. ASTM D 4060, Test Method for Abrasion Resistance of Organic Coatings by the Taber Abraser.
7. ASTM D 4259, Practice for Surface Cleaning Concrete for Coating.
8. ASTM D 4259, Practice for Abrading Concrete.
9. ASTM D 4263, Test Method for Indicating Moisture in Concrete by the Plastic Sheet Method.
10. ASTM D 4285, Test Method for Indicating Oil or Water in Compressed Air.
11. ASTM D 4417, Test Methods for Field Measurement of Surface Profile of Blast Cleaned Steel.

12. ASTM C1583/C1583M, Tensile Strength of Concrete Surfaces and the Bond Strength or Tensile Strength of Concrete Repair and Overlay Materials by Direct Tension (Pull-off Method)
13. ASTM D 4541, Test Method for Pull-Off Strength of Coatings Using Portable Adhesion-Testers.
14. ASTM D 7234, – Standard Test Method for Pull-off Adhesion Strength of Coatings on Concrete Using Portable Pull-off Adhesion Testers.
15. ASTM D 4787, Practice for Continuity Verification of Liquid or Sheet Linings Applied To Concrete Substrates.
16. ASTM E 329, Specification for Agencies Engaged in the Testing and/or Inspection of Materials Used in Construction.
17. ASTM E 548, Guide for General Criteria Used for Evaluating Laboratory Competence.
18. ASTM F 1869, Test Method for Measuring Moisture Vapor Emission Rate of Concrete Subfloor Using Anhydrous Calcium Chloride.
19. NACE International , Essentials of Surface Preparation.
20. Society of Protective Coatings , SSPC - Volume 2, Systems and Specifications.
21. Society of Protective Coatings , SSPC - PA2, Measurement of Dry Coating Thickness with Magnetic Gages.
22. Society of Protective Coatings, SSPC- Paint APPLICATION SPECIFICATION NO. 9 Measurement of Dry Coating Thickness on Cementitious Substrates Using Ultrasonic Gages Society of Protective Coatings , SSPC - VIS 1, Visual Standard for Abrasive Blast Cleaned Steel.
23. Society of Protective Coatings, SSPC - VIS 2, Systems and Specifications.
24. SPPC-SP13/NACE 6, Surface Preparation of Concrete
25. ANSI/NSF Standard 60: Drinking Water Chemicals - Health Effects.
26. ANSI/NSF Standard 61: Drinking Water System Components - Health Effects.

H. Allowable Installation Tolerances:
1. Do not install Work until substrate preparation and tolerances have been approved by ENGINEER, the vinyl ester with graphite lining corrosion protection system manufacturer's technical representative and vinyl ester with graphite lining corrosion protection system installer, and CONTRACTOR has verified to ENGINEER, in writing, that substrates are within tolerances and profiles specified and acceptable to produce approved Work. Work advanced, for any reason, without such verification shall be stopped, and the vinyl ester with graphite lining corrosion protection system removed and replaced with new material if substrates are determined to be unacceptable for approved Work.
2. Substrate Tolerances:
   a. Out-of-Plane: 1/8-inch maximum in ten feet and 1/16-inch maximum in any 12-inches measured along the plane.
   b. Maximum Offset in Plane Alignment: 1/16-inch.
   c. Variation From Slope: 1/8-inch maximum in ten feet.
3. Vinyl Ester with Graphite Lining Corrosion Protection System Tolerances:

a. Finish vinyl ester with graphite lining corrosion protection systems level to 1/8-inch in ten feet with smooth continuous uniformly sloped-to-drain planes.
b. Provide smooth continuous color with no color streaks or inconsistencies with smoothly textured non-slip finish.

I. Pre-Installation Meeting:
1. Before erecting mock-ups, CONTRACTOR, installer, and technical representative of the vinyl ester with graphite lining corrosion protection system manufacturer shall meet on-site with ENGINEER to discuss approved products and workmanship to ensure proper application of the vinyl ester with graphite lining corrosion protection system components and substrate preparation requirements.
2. Review foreseeable methods and procedures related to the vinyl ester with graphite lining corrosion protection system Work, including, but not necessarily limited to, the following:
a. Review Project requirements and the Contract Documents.
b. Review required submittals, both completed and yet to be completed.
c. Review status of substrate Work, including approval of surface preparations and similar considerations.
d. Review requirements of on-site quality control testing and requirements for preparing quality control report as specified herein.
e. Review availability of materials, tradesmen, equipment and facilities needed to make progress and avoid delays.
f. Review required inspection, testing and certifying.
g. Review environmental conditions, other Project conditions, and procedures for coping with unfavorable conditions.
h. Review regulations concerning code compliance, environmental protection, health, safety, fire and similar considerations.
i. Review procedures required for the protection of the vinyl ester with graphite lining corrosion protection system during the remainder of the construction period.
3. Record the discussions of the Pre-Installation Meeting and the decisions and agreements or disagreements reached, and furnish a copy for the record to each party attending. Record any revisions or changes agreed upon, reasons therefore, and parties agreeing or disagreeing with them.
4. Reconvene the meeting at the earliest opportunity if additional information must be developed in order to conclude the subjects under consideration.

J. Mock-Ups:
1. Prior to the installation of the vinyl ester with graphite lining corrosion protection system and auxiliary system components, but after ENGINEER'S approval of samples and Shop Drawings, install eight-foot square stepped-back mock-ups of the systems showing each system component, in areas selected by ENGINEER, to show representative installation of the Work.

Include methods of installation typical to the Work, including penetrations and cove details, using all system components required for the Work.

2. Obtain ENGINEER'S acceptance of visual qualities of the mock-ups before start of a vinyl ester with graphite lining corrosion protection system Work. Retain and protect mock-ups during construction as one standard for judging completed a vinyl ester with graphite lining corrosion protection system Work. Do not alter mock-ups after approval by ENGINEER.
   a. Finished Work, in compliance with visual qualities of mock-ups, that fails other on-site quality control testing procedures shall be replaced by CONTRACTOR with new materials.
3. Vinyl ester with graphite lining corrosion protection system Work that does not meet the standard approved on the sample areas shall be removed and replaced with new material.
4. Build as many mock-ups as required to achieve ENGINEER'S acceptance of the vinyl ester with graphite lining corrosion protection system.
5. Vinyl ester with graphite lining corrosion protection system Work that proceeds without approved mock-ups shall be stopped, and mock-ups prepared for approval.

K. Maintain a Paint Application Log containing the information as shown on the log attached at the end of this Section. The Paint Application Log shall be maintained on a daily basis for all areas where the Work is being performed. The Paint Application Log shall be turned over to the ENGINEER by 9:00 a.m. the following day that the work was performed. The log shall include the following:
   1. Date.
   2. Time.
   3. Weather condition (at work location).
   4. Air temperature (at work location).
   5. Surface temperature (at work location).
   6. Dew point (at work location).
   7. Humidity (at work location).
   8. Location/area square footage.
   9. Description of Work performed.
   10. Materials used, colors and batch numbers, quantity of materials used (not including waste).
   11. Application/surface preparation equipment and personnel.
   12. WFT/surface profile measurements.
   13. Comments, quality control procedures.
   14. Signature/title.

1.3 SUBMITTALS

A. Complete specifications and data on the protection system, application instructions, and material manufacturer's approval of the protection system furnished under this Section shall be submitted in accordance with the Section 01330 Submittals. The protection system manufacturer shall provide certification for each component of

the protection system that will provide corrosion resistance for the specified service conditions. After application of the protection system, the material manufacturer shall certify that the protection system is free of pinholes and holidays.

B. Samples: Submit for approval the following:
   1. Stepped-back vinyl ester with graphite lining corrosion protection system applied to a 12-inch by 12-inch by 2-inch concrete sample panel showing specified surface preparation of concrete, each showing original unprepared surface in addition to each component of the vinyl ester with graphite lining corrosion protection system. Prepare sample panels such that all system components are adequately exposed to view. Apply vinyl ester with graphite lining corrosion protection system to only one-half of the sample board, leaving the other half visible and with required substrate preparation
   2. Full selection of manufacturer's standard and custom colors for selection by ENGINEER. ENGINEER will preliminarily select a maximum of four colors for consideration for use in the Work. Prepare 12-inch by 12-inch samples of each color. From these, ENGINEER will select a maximum of four colors to be used in the Work. ENGINEER will provide CONTRACTOR with locations of each color after this final selection. In addition to color, provide range of textures from smooth to heavily non-slip for selection for use on job mock-up panel.
   3. Sample submittals will be reviewed for number of system components only. Compliance with all other requirements is the responsibility of CONTRACTOR.

C. Shop Drawings: Submit for approval the following:
   1. Copies of specifications, technical information, installation instructions and general recommendations from the vinyl ester with graphite lining corrosion protection system manufacturer for lining required. Include requirements for environmental conditions and other conditions required for an acceptable installation, providing features and performance as stated in manufacturer's literature.
   2. Drawings showing extent of each component of each system used in the Work including all items receiving vinyl ester with graphite lining corrosion protection system such as equipment pads, curbs, sumps, pipe trenches and similar items and surfaces and all details required for the Work referencing required system components provided as samples to ENGINEER. Provide working drawings coordinated with cast-in-place concrete and showing all construction, and other conditions encountered in the Work and manufacturer's approved and recommended details appropriate to construction, expansion and seismic joints as required for full vinyl ester with graphite lining corrosion protection system performance whether or not specific indication is made on the Drawings to the details of the vinyl ester with graphite lining corrosion protection system.

3. Copies of manufacturer's technical information and test performance data, including paint analysis, VOC content in comparison to maximum allowed by Specifications, and application instructions for each material proposed for use.
4. Submit Applicator's Qualifications in accordance with Paragraph 1.2.E., above.
5. Submit proof of acceptability of proposed application techniques by the paint manufacturer selected.
6. CONTRACTOR shall provide a plan for surface preparation for each area of Work and demonstrate procedures of containing dust, and preventing overspray.
7. Copies of CONTRACTOR'S proposed protection procedures in each area of Work explaining methods of protecting adjacent surfaces from splatter, for confining application procedures in a manner that allows other work adjacent to surface preparation and painting Work to proceed safely and without interruption, and for maintaining acceptable application, curing and environmental conditions during and after painting system(s) application.
8. List each material and cross-reference to the specific painting system and application. Identify by manufacturer's catalog number and general classification. State number of gallons of each product being purchased for delivery to the site and the square foot area calculated to be covered by each painting system specified based on theoretical loss of 20 percent. Where actual area to be covered by any paint system exceeds the area submitted to ENGINEER for that system, proof of additional material purchase shall be submitted to ENGINEER. Calculated coverage shall be as specified for each component of each painting system specified. This requirement shall not take precedence over CONTRACTOR'S responsibility to provide dry film thickness required for each component of each painting system.
9. Identify maximum exposure times and temperatures allowable for each paint system component before the next coat of paint must be applied. Submit proposed methods for preparing surfaces for subsequent coats if maximum exposure times are exceeded.
10. Information on curing times and environmental conditions that affect the curing time of each system component and proposed methods for accommodating variations in curing time. Identify this information for each painting system used in the Work.
11. Show interface details with other items such as thresholds, curbs, coves, equipment pads, expansion and seismic joint cover assemblies, floor hatches, ramps, steps and stair nosings.
12. Copies of Material Safety Data Sheets (MSDS) for all products used in the Work and copies of transmittals indicating receipt of MSDS by vinyl ester with graphite lining corrosion protection system installer.
13. Qualifications Data: Submit qualifications data for the following:
    a. Installer.
    b. Testing laboratory.

14. Maintenance Manual: Upon completion of painting Work, furnish five Engineering copies of manufacturer's written instructions for recommended maintenance practices. Include the following information:
    a. Product name and number.
    b. Name, address and telephone number of manufacturer and local distributor.
    c. Detailed procedures for routine maintenance and cleaning.
    d. Detailed procedures for repairs such as dents, scratches and staining.
15. Comply with the requirements of Section 01332, Shop Drawing Procedures.
16. CONTRACTOR shall submit an electronic copy per Specification Section 01332, Shop Drawing Procedures. Text shall be in electronic ASCII format. Drawings and figures shall be in Version 2012 or newer AutoCAD ".dwg," or pdf ".pdf" format.
17. A copy of this specification section, with addendum updates included, and all referenced and applicable sections, with addendum updates included, with each paragraph check-marked to indicate specification compliance or marked to indicate requested deviations from specification requirements. Referenced and applicable sections to be marked up and submitted include:
    a. Not applicable.
    b. Check marks (✓) shall denote full compliance with a paragraph as a whole. If deviations from the specifications are indicated, and therefore requested by the CONTRACTOR, each deviation shall be underlined and denoted by a number in the margin to the right of the identified paragraph, referenced to a detailed written explanation of the reasons for requesting the deviation. The ENGINEER shall be the final authority for determining acceptability of requested deviations. The CONTRACTOR shall furnish equipment and/or services as specified if an exception and/or deviation is rejected. The remaining portions of the paragraph not underlined will signify compliance on the part of the CONTRACTOR with the specifications. Failure to include a copy of the marked-up specification sections, along with justification(s) for any requested deviations to the specification requirements, with the submittal shall be sufficient cause for rejection of the entire submittal with no further consideration.
18. The CONTRACTOR shall submit the preventive maintenance information package as part of the shop drawing submittal package to the ENGINEER for review and approval. **SHOP DRAWING SUBMITTAL PACKAGE WILL NOT BE APPROVED WITHOUT ACCEPTANCE OF PREVENTIVE MAINTENANCE INFORMATION AS DESCRIBED IN SPECIFICATION SECTION 01785.**

D. Test Reports: Submit the following:
    1. Copies of test reports from an independent testing laboratory for all physical properties of the vinyl ester with graphite lining corrosion protection system.
    2. Copies of testing agencies background and experience in performing similar tests to those specified.

3. Final On-Site Quality Control Report: Provide ENGINEER with testing results in each area of the Work, manufacturer's recommended remedial measures, weather, humidity and dew point conditions during the time of installation and curing of the Work, and other requirements as specified for final approval.

E. Component Application and Thickness Report:
   1. Copies of reports listing each component application, dry film thickness, surface temperature, component temperature, and ambient air temperature.

F. Certificates: Submit the following:
   1. Certificates stating that materials meet or exceed Specification requirements and stating that materials have been provided as specified to meet performance criteria and installation requirements specified.
   2. Shelf life history for all products, verifying compliance with requirements specified.
   3. Evidence of acceptance of the substrate and each system component installation by the vinyl ester with graphite lining corrosion protection system materials manufacturer's technical representative. Include such documentation as part of the on-site quality control report submitted to ENGINEER for final approval.
   4. CONTRACTOR'S Review: Submit specified statement to ENGINEER. Show by copy of transmittal form that a copy of the statement has been transmitted to the manufacturer.
   5. Submit statement of application, as specified.
   6. Provide notarized statement verifying that all painting systems are compatible with surfaces specified. All painting systems' components shall have been reviewed by an authorized technical representative of the paint manufacturer for use as a compatible system. Verify that all painting systems are acceptable for the exposures specified and that the manufacturer is in agreement that the selected systems are proper, compatible and are not in conflict with the paint manufacturer's recommended specifications. Show by copy of transmittal form that a copy of the letter has been transmitted to the paint applicator.
   7. Certificate conforming to the requirements of Paragraph 1.2.A., above.

G. Warranties: Submit CONTRACTOR'S and manufacturer's written warranties.

H. Statement of Application: Upon completion of the painting Work, submit a notarized statement to ENGINEER signed by CONTRACTOR and painting applicator stating that the Work complies with the requirements of these Specifications and that application methods, equipment and environmental conditions were proper and adequate for the conditions of installation and use.

1.4 PRODUCT DELIVERY, STORAGE AND HANDLING

A. Delivery of Materials:

1. Deliver materials in the vinyl ester with graphite lining corrosion protection system manufacturer's original unopened and undamaged containers, legibly labeled with information accurately representing container contents, as approved by ENGINEER.
2. Include the following information on the label:
    a. Name of material, manufacturer and supplier.
    b. Brand name, contents, and order number.
    c. Installation, handling and protection requirements.
    d. Accurate representation of DOT classifications.
3. Deliver materials in sufficient quantities to allow uninterrupted continuity of the Work.
4. Packages showing indications of damage that may affect condition of contents are not acceptable.
5. All DOT classified system components shall be accompanied by appropriate DOT documentation.

B. Storage of Materials:
1. Store only approved materials on-site.
2. Store materials in original, undamaged containers with manufacturer's labels and seals intact.
3. Store all materials in a dry, enclosed area, off the ground and away from all possible contact with water and in a location where temperature can be constantly maintained between 50°F and 75°F and out of direct sunlight, away from open flame, sparks or other hazards in full compliance with manufacturer's recommended storage requirements.
4. Prevent damage to materials during storage primarily by minimizing the amount of time they are stored on-site before being incorporated into construction systems.
5. Do not store white, yellow or red labeled products together.

C. Handling of Materials:
1. Do not handle, open or mix component materials, unless vinyl ester with graphite lining corrosion protection system can be properly handled as recommended by the manufacturer.
2. Do not open containers, or expose materials to detrimental conditions. Remove materials so exposed from the site.
3. Handle materials in a manner that prevents contamination and inclusion of foreign materials.
4. Do not open packages or containers until all necessary preparatory Work is complete, approved and installation will begin immediately.
5. Handle all materials in strict compliance with manufacturer's recommended safety precautions.
6. Handle volatile system components in a manner that considers their flash points.

1.5 PROJECT CONDITIONS

A. Environmental Conditions:
   1. Proceed with vinyl ester with graphite lining corrosion protection system Work only when temperature and moisture conditions of substrates, air temperature, relative humidity, dewpoint and other conditions comply with the vinyl ester with graphite lining corrosion protection system manufacturer's written recommendations and when no damaging environmental conditions are forecasted for the time when the materials will be vulnerable to such environmental damage. Record all such conditions and include in final site quality control report.
   2. Maintain substrate temperature before, during and after installation between 50°F and 110°F with temperature stable or falling, in accordance with vinyl ester with graphite lining corrosion protection system manufacturer's instructions.
   3. Do not begin Work when relative humidity is expected to rise above 90 percent during the time of installation and catalyzation, nor, when substrate temperatures are not at least five degrees above the dewpoint temperature.
   4. Do not begin vinyl ester with graphite lining corrosion protection system Work until manufacturer's recommended environmental conditions can be maintained and only when manufacturer and installer are willing to guarantee the Work as required and without additional reservations and restrictions.
   5. Supplemental Heat:
      a. Provide supplemental heat and protection as required to maintain vinyl ester with graphite lining corrosion protection system at minimum of 50°F during and after installation.
      b. Supplemental heat and power sources, as may be required should ambient temperature fall below 50°F, are not available at the site. The provision of all supplemental heat, including fuel, equipment, operating, monitoring and maintenance personnel, and power sources, is the responsibility of CONTRACTOR.
      c. Distribute heat uniformly and provide deflection or protective screens as required to prevent concentration of heat on the vinyl ester with graphite lining corrosion protection system near heat source.
      d. Source of supplemental heat shall not emit contaminants that will adversely affect the cure or performance of the vinyl ester with graphite lining corrosion protection system. Vinyl ester with graphite lining corrosion protection systems so affected shall be removed and replaced with new.

B. Protection and Precautions:
   1. Protect materials against damage by construction activities.
   2. Protect all vinyl ester with graphite lining corrosion protection system materials and system components from all contact with non-associated construction traffic.

3. Do not install the vinyl ester with graphite lining corrosion protection system when adequate protection of the Work is not, or cannot, be made available.
4. Comply with manufacturers' written safety precautions for storage, handling, mixing and installation of each component, and with the requirements of OSHA and local governing authorities having jurisdiction at the site.
5. Environmentally isolate and enclose the Work area so that adjacent Work, and personnel adjacent to the Work area, will be unaffected by the Work of this Section.
6. Provide adequate ventilation for space and appropriate protective life support respirators for installers, during installation and curing periods, with exhaust air adequately diluted and discharged to a safe location. Avoid build-up of hazardous vapors or the creation of hazardous conditions or conditions that may retard the cure of the system.
7. Provide suitable glasses, gloves, respirators and suitable personnel protective clothing for use during installation of the vinyl ester with graphite lining corrosion protection system.
8. Provide protection of substrate surfaces, including Work protection shelters, to prevent substrate temperatures from exceeding manufacturer's recommended installation limits.

C. Sequencing and Scheduling:
1. Proceed with the vinyl ester with graphite lining corrosion protection system only after projections and penetrations through the substrates have been installed, and when the substrate construction and framing of openings is complete.
2. Coordinate and schedule abrasive blasting, grinding and filling of substrates with underlayment's, in order to bring substrates within tolerances specified.
3. Provide vinyl ester with graphite lining corrosion protection system on top of equipment pads, within horizontal pipe chases and similar locations where installation of equipment, piping and similar items would cause the vinyl ester with graphite lining corrosion protection system installation difficulties, before such equipment, piping and similar items have been installed. In order to advance the Work, be prepared to schedule multiple visits of a vinyl ester with graphite lining corrosion protection system installer to the site for the purpose of installing the vinyl ester with graphite lining corrosion protection system in areas that will become inaccessible with the installation of equipment or piping, as may be required for proper sequencing of the Work.
4. Sequence the Work so that other installers do not interfere with, or need to cross, the vinyl ester with graphite lining corrosion protection system installation areas until such time as the vinyl ester with graphite lining corrosion protection system can be adequately protected from potential damage.

D. Substitutions:

1. Do not change products, system components, colors or manufacturers after Shop Drawing and Samples approvals by ENGINEER.
2. Clearly identify, in a manner which is highlighted to ENGINEER, all proposed substitutions, modifications, variations, unspecified features and "or equal" products. Provide complete comparative data with specified products at time of Shop Drawing submission.

1.6 WARRANTY

A. General Warranty: The special warranties specified in this Article shall not deprive OWNER of other rights or remedies OWNER may otherwise have under the Contract Documents and shall be in addition to, and run concurrent with, other warranties made by CONTRACTOR under the Contract Documents.

B. Bonded Warranty: The corrosion protection system applicator shall supply a five year bond, payable to the City of Phoenix (COP), for the corrosion protection system that is approved by COP. The five year bond shall cover both the material costs and the labor costs associated with installing the approved corrosion protection system. The bond shall also be unconditional in nature covering any type of failure in the corrosion protection system and agreeing to repair or replace it at no additional cost to COP at any point during this two year period. The corrosion protection system applicator shall also supply a warranty from the corrosion protection system manufacturer addressed to the A-minus or better bonding company and COP. This warranty shall state, at a minimum, that if the corrosion protection system is applied in accordance with the manufacturer's instructions, that the corrosion protection system will be chemical resistant and not fail for a period of five years from the date of substantial completion when exposed to the customer's normal operating conditions as stated in the specification. The definition of a corrosion protection system failure is that blistering, cracking, embrittlement, or softening of the corrosion protection system is starting to occur.

PART 2 - PRODUCTS

2.1 SYSTEM PERFORMANCE

A. Performance Criteria:
   1. General:
      a. Standards: Comply with applicable standards, recommendations and specified publications of ASTM, except to the extent more stringent requirements are specified or required by governing authorities having jurisdiction.
   2. The completed vinyl ester with graphite lining corrosion protection system shall demonstrate the following physical properties:
      a. Flexural Strength, ASTM C 580: 5,000 to 5,200 pounds per square inch, minimum.

b. Tensile Strength, ASTM C 307: 2,500 to 2,800 pounds per square inch, minimum.
c. Abrasive Factor, CS-17 wheel, 1000 cycles, 1000 gram load, ASTM D 4060: 23 mg.
d. Water Vapor Transmission: 0.0022 perm. in.
e. Flame Spread, ASTM D 635: < 5mm.

3. The completed vinyl ester with graphite lining corrosion protection system shall demonstrate the following physical properties:
   a. Coefficient of Expansion, ASTM D 696, 70 to 210°F: 12 to 15 x 10^{-6} inches per inch per degree F.
   b. Compressive Strength, ASTM C 579: 12,500 pounds per square inch, minimum.
   c. Tensile Strength, ASTM C 307: 2,400 pounds per square inch, minimum.
4. The completed vinyl ester with graphite lining corrosion protection system shall demonstrate the following physical properties:
   a. Abrasive Factor, CS-17 wheel, 1000 cycles, 1000 gram load, ASTM D 4060: 23mg.
   b. Compressive Strength, ASTM C 579: 12,500 pounds per square inch, minimum.
   c. Tensile Strength, ASTM C 307: 2,400 pounds per square inch, minimum.

B. Conditions of Service:
1. The finished vinyl ester with graphite lining corrosion protection system shall be capable of providing splash and spill protection for 72 hours, at temperatures from 50° to 150°F, from the chemical exposures listed below, with no adverse effects. Products capable of only intermittent spill exposure resistance are not acceptable. The lining will be exposed to sunlight and atmospheric conditions.
   a. 50 percent Sodium Hypochlorite, 150°F
   b. 50 percent Citric Acid, Sulfuric Acid, 150°F
   c. 38 percent Sodium Bisulfite, 150°F
   d. 25 percent Sodium Hydroxide, 150°F
   e. 40 percent Aluminum Chlorohydrate, 150°F
2. The coating system will be exposed to sunlight and outdoor atmosphere.
3. Coating system requiring a UV protective top coat that is not chemically resistant to the chemical listed in Paragraph 2.1.E.1, above will not be accepted.

2.2 MATERIALS

A. Materials shall be suitable for the specified service conditions. Products composing the corrosion protection system shall be chemically resistant to the chemicals, concentrations, temperatures, exposure times, and other relevant service conditions. In many cases, repair materials, primers, flexible basecoats, and other ancillary products will be protected by a corrosion resistant and/or wear resistant layer of the protection system and may not be required to meet these criteria provided the

overall protection system complies with the performance criteria. Each product of the protection system that complies with the performance requirements shall be certified as such by the protection system manufacturer.

1. New concrete surfaces to receive a corrosion protection system shall have a vapor emission control surface treatment applied the day of the concrete pour. The product shall meet ASTM C1315 Type 1 Class A and ASTM C309 Type 1 Class A requirements. The product shall control moisture vapor emission from damaging the corrosion protection system and shall be compatible with the approved lining material manufacturer. The surface treatment manufacturer shall have a technician on site every day of the concrete pour to train in the application of the product and return for every application thereafter to verify the correct application has been performed. The surface treatment shall be applied per the manufacturer's recommendations. A capillary moisture test shall be conducted as specified herein. Adhesion testing shall also be conducted as specified herein prior to conducting concrete pours receiving lining material and must be approved by the lining material manufacturer. Surface treatment manufacturer shall provide a 10-year warranty covering all labor and materials needed to replace all floor covering that fails due to moisture vapor emission and moisture born contaminates. The vapor emission control surface treatment shall be CS 2000 Spray Applied System as manufactured by Creteseal, Santa Ana, CA, or approved equal.

B. Basecoat: Catalyzed, vinyl ester or epoxy resin in accordance with manufacturer's instructions; with silica fillers. The flexible basecoat shall be certified by the material manufacturer as capable of not less than 50 mils of differential movement without damaging the corrosion protection system.

C. Concrete Surfacer: Provide a two component vinyl ester or epoxy material with inert mineral fillers as recommended by the vinyl ester with graphite lining corrosion protection system manufacturer for filling concrete "bug" holes and voids in horizontal and vertical concrete surfaces, complying with the following:
   1. Adhesion to Concrete, ASTM D 7234: Cohesive failure of concrete.
   2. Compression Strength, ASTM C 579: 1,500 to 2000 pounds per square inch, minimum.

D. Moisture Barrier Coating: Two component water dispensed polyurethane, complying with the following:
   1. Compressive strength, ASTM C 579: 7,300 pounds per square inch, minimum.
   2. Tensile strength, ASTM D 7234: Cohesive failure of concrete.

E. Primer: Two component, 100 percent solids, moisture-tolerant, conductive, catalyzed vinyl ester or epoxy in accordance with the manufacturer's instructions, complying with the following:
   1. Tensile Strength, ASTM C 307: 2,500 to 3,000 pounds per square inch (Vinyl ester) or 2,000 to 2,500 pounds per square inch (Epoxy).

2. Tensile Elongation, ASTM C 307: Five to six percent (Vinyl ester) or 20 to 25 percent (Epoxy).
3. Adhesion to Concrete, ASTM D 7234: Cohesive failure of concrete.

F. Reinforcement: one ounce. chopped strand fiberglass mat.

G. Topcoat: Catalyzed, vinyl ester resin with graphite fillers.

H. Auxiliary System Components and Accessories: Provide all auxiliary components such as accelerators, solvents, saturants, fillers, sand, smoothing liquids, hardeners and cleaners as recommended by the manufacturer for maximum chemical-resistance, maximum adhesion to substrate and full system component compatibility.

I. Chemical resistant caulking shall be suitable for the specified service conditions and shall be as recommended, in writing, by the protection system material manufacturer.

J. Sealants:
1. Exposed floor joints: Two component, 100 percent solids, polysulfide polymer based joint sealant.
2. Non-moving joints, covered with topping: 100 percent solids, pourable, two component, flexible epoxy caulk.
3. All wall joints: Two component, 100 percent solids, polysulfide polymer based joint sealant.

K. Vinyl Ester with Graphite Lining Corrosion Protection System Manufacturer:
1. The corrosion protection system specified is manufactured by Dudick, Inc. Equivalent protection systems of other manufacturers regularly producing high quality concrete corrosion protection systems and materials including providing the required material manufacturer's engineering field services may be furnished subject to review and acceptance by ENGINEER.

L. Product and Manufacturer: Provide one of the following:
1. PROTECTO-COAT 805 Coating System, with Scratch-Coat 800 Surfacer, Primer 27C, Shock-Crete F moisture barrier coating and Caulk 100XT, 139 and 149, by Dudick, Incorporated.
2. PROTECTO-GLASS 865 Lining System, with Scratch-Coat 800 Surfacer, Primer 27C, Shock-Crete F moisture barrier coating and Caulk 100XT, 139 and 149, by Dudick, Incorporated.
3. PROTECTO-FLEX 805 Lining System with Scratch-Coat 300 Surfacer, Primer 67C, Shock-Crete F moisture barrier coating and Caulk 100XT, 139 and 149, by Dudick, Incorporated.
4. Acceptable alternative manufacturers that may have a corrosion protection system that will satisfy the specified service conditions that may be furnished subject to review and acceptance by ENGINEER are General Polymers, KCC

Corrosion Control Co. Ltd., Plasite, PolySpec Corporation, and Tnemec, Carboline, and International Paints, without exception. Other manufacturers and their corrosion protection systems will not be acceptable.

PART 3 - EXECUTION

3.1 INSPECTION

A. Examine the areas and conditions under which the vinyl ester with graphite lining corrosion protection system Work is to be performed and notify ENGINEER, in writing, of conditions detrimental to the proper and timely completion of the Work. Do not proceed with the Work until satisfactory conditions have been corrected in a manner acceptable to ENGINEER.

B. Concrete shall have a wood float finish. Concrete shall have cured for minimum of 28 days prior to initiation of this Work.

3.2 PREPARATION FOR CAST-IN-PLACE CONCRETE SUBSTRATES

A. Concrete shall be free of curing compounds and form release agents.

B. All surfaces shall be free of objectionable substances and shall meet the manufacturer's recommendations for surface preparation. If the lining material manufacturer recommends any other surface preparation, it shall be brought to ENGINEER's attention and may be incorporated into the Work if acceptable to ENGINEER.

C. All surfaces shall be dry when coated and free from dirt, dust, sand, mud, oil, grease, rust, mill scale, and other objectionable substances. Oil and grease shall be completely removed as recommended by the corrosion protection system material manufacturer before mechanical cleaning is started.

D. New concrete shall be cured for at least 28 days and the substrate pH shall be between 7-11 before the protection system is applied and shall be ready to receive the protection system as determined by the material manufacturer.

E. Surface profile shall be 4 mils [100 μm] for a coating protection system and 22 mils [550 μm] for a lining protection system, but not less than 25% of the total dry film thickness specified for the corrosion protection system.

F. Test cast-in-place concrete for capillary moisture migration in the concrete, in compliance with ASTM D 4263, in order to determine that the maximum safe moisture-emission level, recommended by the vinyl ester with graphite lining corrosion protection system manufacturer’s written installation limitations, will not be exceeded, before installation of the vinyl ester with graphite lining corrosion protection system.

1. Perform minimum of one test for every 1000 square feet of substrate area to receive the vinyl ester with graphite lining corrosion protection system. Perform tests on areas scheduled to be coated the following day.
2. If moisture tests indicate unacceptable levels of moisture remaining in the substrate, do not install the vinyl ester with graphite lining corrosion protection system. Report existing conditions, along with manufacturer's recommendations, to ENGINEER. Allow additional time for cast-in-place concrete to dry and retest.
3. At CONTRACTOR'S option and expense, may enclose, dehumidify or provide additional heat, in order to speed the drying process. If, after remediation measures are implemented, retesting the cast-in-place concrete continues to indicate unacceptable levels of moisture, perform calcium chloride tests in accordance with ASTM D 4263 and ASTM F 1869. If readings are below 5 pounds per 1,000 square feet for 24 hours install the primer. If readings are between 5 and 8 pounds per 1,000 square feet for 24 hours install the moisture barrier coating, if readings are over 8 pounds per 1,000 square feet for 24 hours submit the vinyl ester with graphite lining corrosion protection system manufacturer's recommended and remedial action for ENGINEER'S approval.

G. CONTRACTOR shall removal all fins and projections and "V" out cracks in the concrete to a minimum of ¼ inch wide.

H. CONTRACTOR shall saw-cut all coating termination points to a minimum of ¼ inch depth.

I. CONTRACTOR shall prepare surface by mechanical means. Abrasive "Sweep" Blast with a 16-40 mesh angular aggregate. Remove all laitance, weak concrete and provide a profile similar to ICRI CSP4-CSP6 in accordance with SPPC-SP13/NACE 6 "Surface Preparation of Concrete."

J. Prepare and clean all surfaces of cast-in-place concrete to receive the vinyl ester with graphite lining corrosion protection system in compliance with ASTM D 4259 to obtain a uniform and continuous anchor profile and to provide a surface texture texture should be similar to 40-60-grit sandpaper or the visual standard, CSP-5 from the International Concrete Repair Institute with exposed pea gravel . Use mechanical abrading procedures and abrasive blasting procedures as specified in ASTM D 4259. Use 40 to 80-mesh abrasive and clean, dry, compressed air. Compressed air cleanliness shall be in compliance with ASTM D 4285. Pressure at blasting nozzle shall not exceed 80 psi. Do not concentrate blast on surface, but move at a fairly rapid rate to provide a surface free of laitance and contaminants. Provide post-surface preparation cleaning in accordance with ASTM D 4258 to remove loose material. Surface preparation shall open all surface air holes by removing all laitance shoulders surrounding the air holes. Vacuum all surfaces to remove all dust and sand, and wash with potable water. CONTRACTOR shall repair all spalled areas, voids, and cracks

and shall removal all fins and other surface projections to produce a flush surface for application of the protection system.

1. Provide additional surface preparation if 40-60-grit sandpaper or the visual standard, CSP-5 from the International Concrete Repair Institute with exposed pea gravel .
2. All surface laitance and other contaminants shall be completely removed and surface profile shall be as specified, before commencement of surfacer installation.

K. In addition to abrasive blasting, level and grind cast-in-place concrete substrates to manufacturer's recommended tolerances and to produce a smooth, uniform installation.

1. Remove all cast-in-place concrete fins, projections and other surface irregularities that would protrude above the surfacer and finished base coat, by chipping and scarification by mechanical abrasion.

L. Adhesion Testing: Before application of the vinyl ester with graphite lining corrosion protection system, an adhesion test shall be conducted on a properly prepared concrete surface that is acceptable to the material manufacturer and ENGINEER. The test area shall be at least two square feet or larger to allow a minimum of three tests to be conducted. The test area shall be coated with the specified system and cured as recommended by the material manufacturer. Adhesion testing shall be conducted as specified herein after the concrete surface has been prepared and approved by the material manufacturer. Pull-off strength adhesion tests of protection system shall be conducted by the material manufacturer in accordance with ASTM D 7234, using an Elcometer tensile adhesion tester. Adhesion strength test results shall exceed 500 psi [3.4 MPa] or a higher value if recommended by material manufacturer. At least three adhesion tests shall be conducted and the results averaged. Adhesion strength shall equal or exceed the minimum adhesion strength recommended by the material manufacturer and shall exceed the tensile strength of the concrete. If the protection system fails the adhesion test, the cause of the failure shall be determined and corrected before re-conducting the test.

M. Start of the vinyl ester with graphite lining corrosion protection system installation operations shall indicate acceptance of substrate conditions and full responsibility for the completed Work.

N. Concrete surfaces, including those with bug holes less than 1-inch (25 mm) in any dimension, shall be prepared using an epoxy concrete filler as recommended by the corrosion protection system material manufacturer.

3.3 MIXING AND THINNING

A. Materials shall be thoroughly mixed each time any is withdrawn from the container, and the containers shall be kept tightly closed except while material is being withdrawn.

B. Protection system components shall be mixed to proper consistency and viscosity in accordance with the manufacturer's recommendations. Thinning will not be permitted. No adulterant, unauthorized thinner, or other material not included in the formulation shall be added to the protection system components for any purpose.

3.4 SYSTEMS INSTALLATION

A. The vinyl ester coating with graphite corrosion protection system shall be applied in three or more coats. The vinyl ester coating with graphite corrosion protection system shall consist of one prime coat and two or more finish coats. Surfacer thickness will vary depending on concrete texture. Moisture barrier coating shall be 125 mils, minimum. The prime coat wet film thickness shall be at least six mils. Each finish coat shall be 15 to 20 mils dry film thickness. The vinyl ester with graphite lining corrosion protection system shall have a total dry film thickness of at least 40 mils.

B. The vinyl ester with graphite lining corrosion protection system shall be applied in four or more coats. The vinyl ester with graphite lining corrosion protection system shall consist of a prime coat, one basecoat, reinforcement and saturant, and two or more finish coats. The prime coat shall be at least six mils wet film thickness. Surfacer thickness will vary depending on concrete texture. Moisture barrier coating shall be 125 mils, minimum. The basecoat shall be trowel applied, to a thickness of 63 mils (1/16-inch). The reinforcement shall be pressed firmly into the basecoat, and then saturated with the basecoat resin mixture. Each finish coat shall be 15 to 20 mils dry film thickness. The vinyl ester with graphite lining corrosion protection system shall have a total dry film thickness of at least 100 mils.

C. The vinyl ester with graphite lining corrosion protection system shall be applied in four or more coats. The vinyl ester with graphite lining corrosion protection system shall consist of one prime coat, one basecoat, reinforcement and saturant, and two or more finish coats. The prime coat wet film thickness shall be at least six mils. Surfacer thickness will vary depending on concrete texture. Moisture barrier coating shall be 125 mils, minimum. The basecoat shall be trowel applied, to a thickness of 63 mils (1/16-inch). The reinforcement shall be pressed firmly into the basecoat, and then saturated with the basecoat resin mixture. Each finish coat shall be 15 to 20 mils dry film thickness. The vinyl ester with graphite lining corrosion protection system shall have a total dry film thickness of at least 100 mils.

3.5 INSTALLATION ON CAST-IN-PLACE CONCRETE SUBSTRATES

A. Primer:
   1. Prime all cast-in-place concrete to receive the vinyl ester with graphite lining corrosion protection system immediately after surface preparation in order to prevent degradation of prepared surfaces.
      a. All surfaces shall be free of all laitance and other contaminants at time of commencement of primer installation.
   2. Mix primer components as recommended by the vinyl ester with graphite lining corrosion protection system manufacturer. Add accelerator only after consultation with manufacturer's technical representative and with the approval of ENGINEER and based on agreement as to the best approach for handling environmental conditions existing at the site during installation.
   3. Apply conductive primer roller, prior to application of surfacer and base coat and in accordance with manufacturer's approved Shop Drawings.

B. Corrosion protection system shall be applied in accordance with manufacturer's recommendations and in a neat manner, with finished surfaces free of runs, sags, ridges, laps, and brush marks. Corner protection and any other protective measures recommended by the material manufacturer shall be provided. Grit shall be broadcast into first finish coat on the floor to produce an anti-skid surface.

C. The corrosion protection system shall be applied in four or more coats and shall consist of one prime coat, one basecoat, reinforcement and saturant, and two or more finish coats. The prime coat shall be 8-10 mils wet film thickness (WFT). The flexible basecoat shall be trowel applied, to a thickness that provides the specified minimum differential movement. The reinforcement shall be pressed firmly into the basecoat, and then saturated with the basecoat resin mixture. Each finish coat shall be 15-20 mils dry film thickness (DFT). The protection system shall have a total dry film thickness of at least 110 mils DFT.

D. Each coat shall be applied over the previous coat in accordance with the recommendations of the material manufacturer. Each coat shall be applied in a manner that will produce an even film of uniform and proper thickness. In no case shall coating be applied at a rate of coverage that is greater than the maximum rate recommended by the material manufacturer.

E. Recoating shall be done in accordance with manufacturer's recommendations.

F. Follow manufacturer's written instructions for mixing and catalyzing process. Install all system components within their maximum recoat times based on manufacturer's written information, the environmental conditions existing at the site and the exposure of system components to sunlight during installation.

G. If maximum recoat time is exceeded, sand or abrasive blast as recommended by manufacturer's technical representative in consultation with ENGINEER, before

installation of topcoat.Alternate coats shall be of contrasting colors to facilitate in obtaining complete coverage. The first coat in shall be of a dark color.

H. When applying high build coatings with a roller or brush and where a dry film thickness of at least 4 mils [100 µm] per coat is required, two or more coats shall be applied to achieve the recommended dry film thickness equal to a spray applied coating.

I. Install surfacer when primer is tacky. Trowel-apply specified surfacer and patch all cast-in-place concrete surfaces to completely fill surface air holes and honeycombing. Level all protrusions and grind filler and surfacing compounds smooth and level with adjacent surfaces.

J. Trowel-apply specified moisture barrier coating over surfacer to form level surface.

K. The vinyl ester with graphite lining corrosion protection system lining shall be installed on all exposed cast-in-place concrete surfaces shown on the Drawings and specified.

L. Mix materials in the sequence required by the manufacturer.

M. Mix materials and install base coat in accordance with manufacturer's instructions.

N. Press the chopped strand fiberglass mat reinforcement into the wet base coat. Lap all glass reinforcement edges 1-inch minimum. Remove all air pockets and wrinkles. Roll glass reinforcement until it has lost its white color and turns translucent.

O. Saturate the glass reinforcement with catalyzed resin; do not puddle saturant or allow to drip.

P. Lightly broadcast clean, dry sand into the wet saturant.

Q. Allow base coat to cure before proceeding. Grind and repair sharp glass protrusions and fill voids.

R. Brush, roll or spray apply topcoat as recommended by the epoxy corrosion protection system manufacturer.

S. Repeat trowel-applied topcoat material as recommended by manufacturer for complete coverage.

T. Apply materials to tolerances specified and in the recommended quantities necessary to produce a finished system thickness as specified.

U. Install vinyl ester with graphite lining corrosion protection system expansion and construction joints at all concrete expansion and control joints as recommended by the manufacturer.

V. Final topcoat shall include non-skid surface, applied in strict accordance with coating manufacturer's instructions.

W. Corrosion resistant caulking/sealant shall be used at any penetration in the lining and along control joints such as at anchorage of pipe supports and chemical storage tanks.

X. Protection system showing checks, blisters, excessive sags, teardrops, or fat edges will not be acceptable and shall be entirely removed and the surface recoated at no additional cost to OWNER. The protection system shall be pinhole free.

Y. Protection system shall be applied when surface temperature is 50 F [10°C] or above and relative humidity is 90 percent or lower. Protection system shall not be applied in direct sunlight or when the temperature of the concrete is rising. Preferably the protection system shall be applied when the temperature of the concrete is dropping.

3.6 SITE QUALITY CONTROL TESTING

A. The right is reserved by ENGINEER to invoke the following material testing procedure at any time, and any number of times, during the period of the vinyl ester with graphite lining corrosion protection system installation:
   1. Engage the service of an independent testing laboratory to sample any of the system components being used. Samples of each material delivered to the site will be taken, identified and sealed, and certified as to being the material actually applied to the surfaces in each area.
   2. A testing laboratory, selected by OWNER, as indicated in Division 1, General Requirements, will perform appropriate tests for any or all of the following characteristics:
      a. Abrasion resistance.
      b. Flexibility.
      c. Wash ability.
      d. Absorption.
      e. Chemical resistance.
      f. Dry opacity.
      g. Generic materials analysis including compressive strength, tensile strength and water vapor transmission.
   3. If the test results show that the material being used does not comply with the specified requirements, ENGINEER may direct CONTRACTOR to stop the installation and remove non-complying vinyl ester with graphite lining corrosion protection system; pay for testing; and prepare and repaint surfaces

coated with the rejected system with material complying with the Specifications.

4. Testing can only be done by manufacture in the case the OWNER apporves it. Manufacture needs to provide performance criteria testing legal document they have to stand behind

B. CONTRACTOR will notify ENGINEER after completion of installation of each component of the vinyl ester with graphite lining corrosion protection system. After inspection and checking of film thickness, and for other imperfections, and after approval by ENGINEER, proceed with the succeeding coat. Provide dry-film thickness gages for checking the film thickness and visual standards to check surface preparation. Calibrate dry film thickness gage at the site using Bureau of Standards standard shim blocks. Provide holiday detector for holiday testing. The holiday detector will remain the property of CONTRACTOR.

1. Product and Manufacturer: Provide the following:
   a. Film Thickness Tester: Model FM-III as manufactured by Mikrotest, (Furnish Two).
   b. Holiday Detector: high voltage spark tester manufactured by Tinker Rasor or Elcometer.
   c. Visual Standards - ASTM D 2200 and SSPC (VIS 1).
2. ENGINEER shall witness all holiday testing and shall be notified of all scheduled testing 24 hours in advance.
3. Additional coats shall be applied, if required, to produce the specified film thickness and to correct holidays and to completely fill all surface air holes.

C. Measure thickness of dry film nonmagnetic coatings following recommendations of SSPC-PA 2. These procedures are intended to supplement manufacturers' approved instructions for the manual operation of measurement gages and are not intended to replace them.

D. The surfaces shall be cleaned and prepared as needed to properly conduct the visual inspection, spark testing, and adhesion testing and chemical resistant testing. All inspection and testing shall be witnessed by ENGINEER.

1. Visual Inspection
   a. The surface of the protection system shall be visually inspected.
2. Spark Testing:
   a. All detected holidays and pinholes shall be marked and repaired as recommended by the material manufacturer at no additional cost to OWNER.
   b. Corrosion protection lining systems shall be spark tested after protection system basecoat is installed and before the topcoats are applied. The material manufacturer shall spark-test all concrete surfaces covered with protection system basecoat using an acceptable high-voltage electrical spark tester in accordance with ASTM D4787 and set at the recommended

voltage, or as a minimum at 100 volts per mil [25 μm] of liner thickness. Before beginning the spark testing, the material manufacturer shall verify the testing equipment is working properly. The electrode movement shall be continuous and shall proceed in a systematic manner that will cover 100% of the lining surface. A carbon fiber brush shall be used on the sensor electrode.

3. Adhesion Testing
   a. Before the protection system is applied, an adhesion test shall be conducted on a properly prepared concrete surface that is acceptable to the material manufacturer and ENGINEER. The test area shall be at least 2 square feet [0.19 m2] to allow a minimum of three (3) tests to be conducted. The test area shall be coated with the specified system and cured as recommended by the material manufacturer. Pull-off strength adhesion tests shall be conducted by the material manufacturer in accordance with ASTM 7234 using an Elcometer tensile adhesion tester. At least three (3) adhesion tests shall be conducted and the results averaged. Adhesion strength shall equal or exceed the minimum adhesion strength recommended by the material manufacturer and shall exceed the tensile strength of the concrete.
   b. If the protection system fails the adhesion test, the cause of the failure shall be determined and corrected before the test is repeated.
4. Chemical Resistant Testing: After approval of job mock-up and substrate preparations, install vinyl ester with graphite lining corrosion protection system to a minimum of eight square feet, for each system specified, within a chemical containment area. Installation of test area shall be supervised and approved by manufacturer's Technical Representative as an acceptable installation. Test the vinyl ester with graphite lining corrosion protection systems for a minimum of 48 hours at normal operating temperatures. Place specified chemicals at normal operating temperature to a minimum depth of 1/2-inch over the entire floor surface of the area. Maintain operating temperature of space and specified chemicals. After 48 hours remove the chemical and inspect the surfaces of the vinyl ester with graphite lining corrosion protection systems. The vinyl ester with graphite lining corrosion protection systems shall show no sign of delamination, cracking, crazing, color change, softening or any other physical or chemical changes whatsoever and shall be unaffected from the immersion condition. If the vinyl ester with graphite lining corrosion protection systems show deterioration, the test may be repeated at CONTRACTOR'S expense. If the vinyl ester with graphite lining corrosion protection systems fail to perform according to Specification at the completion of this second test, the vinyl ester with graphite lining corrosion protection systems shall be rejected by ENGINEER and an "approved equal" product shall be submitted for approval by CONTRACTOR. Test "approved equal" product as specified herein.

E. Notify ENGINEER after completion of installation of each component of the vinyl ester with graphite lining corrosion protection system. Mark and repair all pinholes

and repair using topcoat material. After the vinyl ester with graphite lining corrosion protection system is installed, the material manufacturer shall spark-test all concrete surfaces covered with the vinyl ester with graphite lining corrosion protection system with a 20,000 volt AC spark tester in accordance with ASTM D 4787 and set at the recommended voltage, or as a minimum at 100 volts per mil of liner thickness. The material manufacturer shall verify the testing equipment is working properly before beginning the spark testing of the lining. The electrode movement shall be continuous and shall proceed in a systematic manner that will cover 100 percent of the lining surface. A carbon fiber brush shall be used on the sensor electrode. Retest repair after curing.

3.7 ADJUSTMENT AND CLEANING

A. All finished vinyl ester with graphite lining corrosion protection systems shall be protected from damage until Final Completion of the Work. The vinyl ester with graphite lining corrosion protection system damaged in any manner shall be repaired or replaced as required to restore specified system performance.

B. Only the original installer of the vinyl ester with graphite lining corrosion protection system shall replace deteriorated or defective Work.

C. Protection: Care shall be taken to prevent protection system materials from being dropped or spilled on adjacent surfaces, buildings, structures, or facilities. All surfaces so damaged shall be cleaned, repaired, replaced, or coated as acceptable to the ENGINEER.

++ END OF SECTION ++

SECTION 10210

PRIVACY PANELS

PART 1 - GENERAL 1.1 SECTION INCLUDES

A. Louvers, frames, and accessories.

B. Install privacy panels at the MFS Chemical Facility and the ACH Facility. Field verify all dimensions of the structure.

1.2 REFERENCES

A. ASTM B 209 - Standard Specification for Aluminum and Aluminum-Alloy Sheet and Plate; 2017.

B. ASTM B 209M - Standard Specification for Aluminum and Aluminum-Alloy Sheet and Plate (Metric); 2014.

C. ASTM B 221 - Standard Specification for Aluminum and Aluminum-Alloy Extruded Bars, Rods, Wire, Profiles, and Tubes; 2021.

1.3 SUBMITTALS

A. See Section 01300, Submittals, for submittal procedures.

B. Product Data: Provide data describing design characteristics, maximum recommended air velocity, design free area, materials, and finishes.

C. Shop Drawings: Provide privacy panel layout plan and elevations for each well site, opening and clearance dimensions, tolerances; head, jamb and sill details; trim details; blade configuration, blankout areas required, and frames.

D. Manufacturer's Certificate: Certify that products meet or exceed specified requirements.

E. A copy of this specification section, with addendum updates included, and all referenced and applicable sections, with addendum updates included, with each paragraph check-marked to indicate specification compliance or marked to indicate requested deviations from specification requirements. Check marks (✓) shall denote full compliance with a paragraph as a whole. If deviations from the specifications are indicated, and therefore requested by the CONTRACTOR, each deviation shall be underlined and denoted by a number in the margin to the right of the identified paragraph, referenced to a detailed written explanation of the reasons

for requesting the deviation. The ENGINEER shall be the final authority for determining acceptability of requested deviations. The CONTRACTOR shall furnish equipment and/or services as specified if an exception and/or deviation is rejected. The remaining portions of the paragraph not underlined will signify compliance on the part of the CONTRACTOR with the specifications. Failure to include a copy of the marked-up specification sections, along with justification(s) for any requested deviations to the specification requirements, with the submittal shall be sufficient cause for rejection of the entire submittal with no further consideration.

F. The CONTRACTOR shall submit the preventive maintenance information package as part of the shop drawing submittal package to the ENGINEER for review and approval. **SHOP DRAWING SUBMITTAL PACKAGE WILL NOT BE APPROVED WITHOUT ACCEPTANCE OF PREVENTIVE MAINTENANCE INFORMATION.**

1.4 QUALITY ASSURANCE

A. Manufacturer Qualifications: Company specializing in manufacturing products of the type specified in this Section, with minimum five years of documented experience.

B. Manufacturers:
   1. TSM Systems, LLC, Phoenix, AZ.
   2. Approved equal

1.5 WARRANTY

A. Provide 20 year manufacturer warranty against degradation of louver finish, including color changing, chalking, cracking, chipping, or peeling.

PART 2 - PRODUCTS 2.1 PRIVACY PANEL

A. Extent of Shade Panel Coverage:
   1. MFS Chemical Facility
      a. North face: No shade panel.
      b. West face: Shall extend from a point 8-feet above the containment wall to the roof.
      c. South face: Shall extend from a point 8-feet above the containment wall the roof.

      d. East face: Shall extend from a point 6-inches above the safety railing to the roof.

2. ACH Facility
    a. North face: Shall extend from a point 8-feet above the containment wall to the roof.
    b. West face: No shade panel.
    c. South face: Shall extend from a point 8-feet above the containment wall the roof.
    d. East face: Shall extend from a point 8-feet above the containment wall the roof.

B. Privacy Panel Louvers: Horizontal blade, roll form aluminum construction.
    1. Free Area: 34%, minimum.
    2. Blades: Sightproof with drainable edge design.
    3. Frame: 3-inches to 4-inches deep; allow for removal of horizontal blades
    4. Metal Thickness: Frame 0.020-inch; blades 0.020-inch.
    5. Location: Privacy panels shall be located on the east, west and south sides of the BSHY shade structure. Shade height shall extend 10 feet above the containment wall. Widths shall be verified by field measurement.

2.2 MATERIALS

A. Formed Aluminum: Formed sheet, ASTM B 209 (ASTM B 209M).

B. Coating: Coating and color as selected by ENGINEER from manufacturer's standard.

2.3 ACCESSORIES

A. Fasteners and Anchors: Stainless steel.

B. Channel Subframe: Roll form channel-shaped frame for installation at perimeter of wall opening; finish and material to match louver.

PART 3 - EXECUTION 3.1 EXAMINATION

A. Verify that prepared openings and flashings are ready to receive Work and opening dimensions are as indicated on Shop Drawings. B. Verify that field measurements are as indicated.

3.2 INSTALLATION

A. Install louvers level and plumb.

B. Channel shall be mounted to the exterior of the shade structure after the coating has been applied.

C. Install and align louver assembly to ensure moisture shed from louvers and diversion of moisture to exterior.

D. Form closely fitted joints with exposed connections accurately located and secured.

3.3 CLEANING

A. Strip protective finish coverings.

B. Clean surfaces and components.

END OF SECTION

SECTION 10400

EQUIPMENT IDENTIFICATION PLATES

PART 1 - GENERAL

1.1 SUMMARY

A. Furnish and install equipment identification plates on all equipment listed in Section 01800, Equipment Schedule; Section 11285, Hydraulic Gates; all valves listed in Section 11295, Hydraulic Valves; and Section 16225, Electric Motors 250 Horsepower or Less. Install one identification plate as specified herein on each piece of equipment and each valve in a prominent, visible location.

B. The CONTRACTOR shall provide all labor, materials, equipment, and incidentals as specified and required to furnish and install an equipment tag system and Warning Signs.

C. The equipment tag system shall consist of equipment number and equipment description as specified herein.

D. The type of equipment tag system includes, but is not necessarily limited to, the following:
   1. Device tags.
   2. Signal tags.
   3. Miscellaneous mechanical fasteners.

1.2 RELATED SECTIONS

A. Section 01800, Equipment Schedule.

B. Division 11, Equipment.

C. Section 11285, Hydraulic Gates.

D. Section 11295, Hydraulic Valves.

E. Section 16225, Electric Motors 250 Horsepower or Less.

1.3 SUBMITTALS

A. Samples: Submit for approval samples of materials and accessories required for the equipment tag system.

B. Shop Drawings: Submit for approval the following:
   1. Anchorage and accessory items.

2. Samples of actual equipment tags for five devices.

C. Shop Drawings: Submit for approval the following:
   1. A copy of this specification section, with addendum updates included, and all referenced and applicable sections, with addendum updates included, with each paragraph check-marked to indicate specification compliance or marked to indicate requested deviations from specification requirements. Check marks (✓) shall denote full compliance with a paragraph as a whole. If deviations from the specifications are indicated, and therefore requested by the CONTRACTOR, each deviation shall be underlined and denoted by a number in the margin to the right of the identified paragraph, referenced to a detailed written explanation of the reasons for requesting the deviation. The ENGINEER shall be the final authority for determining acceptability of requested deviations. The CONTRACTOR shall furnish equipment and/or services as specified if an exception and/or deviation is rejected. The remaining portions of the paragraph not underlined will signify compliance on the part of the CONTRACTOR with the specifications. Failure to include a copy of the marked-up specification sections, along with justification(s) for any requested deviations to the specification requirements, with the submittal shall be sufficient cause for rejection of the entire submittal with no further consideration.
   2. The CONTRACTOR shall submit the preventive maintenance information package as part of the shop drawing submittal package to the ENGINEER for review and approval. **SHOP DRAWING SUBMITTAL PACKAGE WILL NOT BE APPROVED WITHOUT ACCEPTANCE OF PREVENTIVE MAINTENANCE INFORMATION.**

1.4 QUALITY ASSURANCE

A. Source Quality Control: Provide equipment tags by a single manufacturer.

PART 2 - PRODUCTS

2.1 EQUIPMENT IDENTIFICATION PLATE

A. Equipment identification plates shall be manufactured from Type 316 stainless steel material with raised numbers and letters. Equipment identification plates shall include equipment number and the equipment description consisting of three or four lines. Numbers and letters shall be 3/16-inch in height and centered on the identification plate.

B. Equipment identification plates shall be fastened with Type 316 stainless steel pins, rivets, bands, or screws as approved by the ENGINEER. Equipment identification plates shall be fixed to the piece of equipment in a permanent manner. Type 316 stainless steel chain connection may be acceptable only if permanent mounting is not possible.

2.2 WARNING SIGNS

A. Provide Danger, Caution, Notice, and Safety Instructional Signs as specified herein. Signs shall meet OSHA specifications. Provide hazardous material warning signs as required in Uniform Fire Code Article 80 and NFPA 704. A maximum of 50 warning signs shall be provided by the CONTRACTOR. The CONTRACTOR shall coordinate with the ENGINEER in determining the location and legend of the following sign types outlined below:

1. Sign Material: Aluminum.
2. Size: 10-inches by 14-inches.
3. Thickness: 0.10-inch
4. Fabrication:
    a. Rounded corners.
    b. Drilled holes in corners with grommets.
5. Mount: Sign shall be wall or handrail mounted depending on location and as recommended by the manufacturer.
6. Letters:
    a. 2-inches for words "DANGER", "CAUTION", "NOTICE", or "SAFETY FIRST".
    b. 3/4-inch for other text.
        1) Danger Signs:
            a) White background.
            b) White letters for word "DANGER" placed on standard red oval with black panel.
            c) Additional letters: Black
            d) Background: White
            e) Additional text: CONTRACTOR to coordinate with ENGINEER
        2) Caution Signs:
            a) Yellow background.
            b) Yellow letters for word "CAUTION" placed on black panel.
            c) Additional letters: Black
            d) Background: Yellow
            e) Additional text: CONTRACTOR to coordinate with ENGINEER
        3) Warning Signs:
            a) Orange background.
            b) Orange letters for word "WARNING" placed on black panel.
            c) Additional letters: Black
            d) Background: Orange
            e) Additional text: CONTRACTOR to coordinate with ENGINEER
        4) Notice Signs:
            a) White background.
            b) White letters for word "NOTICE" placed on blue panel.
            c) Additional letters: Black
            d) Background: White

e) Additional text: CONTRACTOR to coordinate with ENGINEER.

5) Safety instruction signs:
   a) White background.
   b) White letters for word "SAFETY FIRST" placed on black panel.
   c) Additional letters: Black
   d) Background: White
   e) Additional text: CONTRACTOR to coordinate with ENGINEER.

B. In addition to the 50 signs as described in Paragraph 2.2.A, CONTRACTOR shall also provide non-potable water yard hydrant and hose bibb signs. All non-potable water hose bibs and yard hydrants shall have a CAUTION sign with the following text: "NON-POTABLE WATER, DO NOT DRINK". The sign shall be either wall mounted or handrail mounted depending on the location. Sign shall be mounted where it is clearly visible and as close to the hose bibb or yard hydrant as possible. Sign shall have the following characteristics outlined below and as shown on the Drawings.
   1. Sign Type: Caution sign.
   2. Additional Text: NON-POTABLE WATER, DO NOT DRINK (in two lines).
   3. Additional Text Size: 3/4-inch.
   4. Mounting: Wall or handrail mounting based on location and as recommended by the manufacturer.
   5. Letter Color: Black.
   6. Back Panel Color: Yellow.
   7. Back Panel Material: Aluminum sheet.
   8. Back Panel Size: 10-inches by 14-inches.

PART 3 - EXECUTION

3.1 INSPECTION

A. CONTRACTOR and his installer shall examine the substrates and conditions under which the equipment tags are to be installed and notify ENGINEER, in writing, of conditions detrimental to the proper and timely completion of the Work. Do not proceed with the Work until unsatisfactory conditions have been corrected in a manner acceptable to ENGINEER.

3.2 INSTALLATION

A. Install equipment tags and components at the locations as directed by ENGINEER; securely mount with concealed theft-resistant fasteners. Install equipment tags after all equipment has been painted, equipment tags shall not be painted.

B. Use Type 316 stainless steel fasteners.

C. Install level, plumb, and at the proper height. Repair or replace damaged units as directed by ENGINEER.

++ END OF SECTION ++

SECTION 10425

SIGNS

PART 1 - GENERAL

1.1 SUMMARY

A. This Section includes the following types of signs:
   1. Panel signs.
   2. Self-luminous exit signs.

B. Related Sections: The following Sections contain requirements that relate to this Section:
   1. Division 15, Mechanical, Sections for labels, tags, and nameplates for mechanical equipment.
   2. Division 16, Electrical, Sections for labels, tags, and nameplates for electrical equipment.
   3. Division 16, Electrical, Sections for illuminated exit signs.
   4. Division 16, Electrical, Sections for electrical service and connections for illuminated letters.

1.2 SUBMITTALS

A. General: Submit the following according to the conditions of the Contract and Division 1, General Requirements, Specification Sections.

B. Product data for each type of sign specified, including details of construction relative to materials, dimensions of individual components, profiles, and finishes.

C. Shop Drawings showing fabrication and erection of signs. Include plans, elevations, and large-scale sections of typical members and other components. Show anchors, grounds, layout, reinforcement, accessories, and installation details.
   1. Provide message list for each sign required, including large-scale details of wording and lettering layout.
   2. For signs supported by or anchored to permanent construction, provide setting drawings, templates, and directions for installation of anchor bolts and other anchors to be installed as a unit of Work in other Sections.
   3. Templates: Furnish full-size spacing templates for individually mounted dimensional letters and numbers.

D. Samples for verification of color, pattern, and texture selected and compliance with requirements indicated:
   1. Cast Acrylic Sheet and Plastic Laminate: Provide a sample panel not less than 8-1/2-inches by 11-inches for each material, color, texture, and pattern required.

On each panel include a representative sample of the graphic image process required, showing graphic style, and colors and finishes of letters, numbers, and other graphic devices.

2. Aluminum: Samples of each finish type and color, on 6-inches long sections of extrusions and not less than 4-inch squares of sheet or plate, showing the full range of colors available.
3. Dimensional Letters: Provide full-size representative samples of each dimensional letter type required, showing letter style, color, and material finish and method of attachment.

E. Shop Drawings: Submit for approval the following:
1. A copy of this specification section, with addendum updates included, and all referenced and applicable sections, with addendum updates included, with each paragraph check-marked to indicate specification compliance or marked to indicate requested deviations from specification requirements. Check marks (✓) shall denote full compliance with a paragraph as a whole. If deviations from the specifications are indicated, and therefore requested by the CONTRACTOR, each deviation shall be underlined and denoted by a number in the margin to the right of the identified paragraph, referenced to a detailed written explanation of the reasons for requesting the deviation. The ENGINEER shall be the final authority for determining acceptability of requested deviations. The CONTRACTOR shall furnish equipment and/or services as specified if an exception and/or deviation is rejected. The remaining portions of the paragraph not underlined will signify compliance on the part of the CONTRACTOR with the specifications. Failure to include a copy of the marked-up specification sections, along with justification(s) for any requested deviations to the specification requirements, with the submittal shall be sufficient cause for rejection of the entire submittal with no further consideration.
2. The CONTRACTOR shall submit the preventive maintenance information package as part of the shop drawing submittal package to the ENGINEER for review and approval. **SHOP DRAWING SUBMITTAL PACKAGE WILL NOT BE APPROVED WITHOUT ACCEPTANCE OF PREVENTIVE MAINTENANCE INFORMATION.**

1.3 QUALITY ASSURANCE

A. Sign Fabricator Qualifications: Firm experienced in producing signs similar to those indicated for this Project, with a record of successful in-service performance, and sufficient production capacity to produce sign units required without causing delay in the Work.

B. Single-Source Responsibility: For each separate sign type required, obtain signs from one source of a single manufacturer.

C. Design Concept: The Drawings indicate sizes, profiles, and dimensional requirements of signs and are based on the specific types and models indicated. Sign units by other manufacturers may be considered provided deviations in dimensions and profiles do not change the design concept as judged by the ENGINEER. The burden of proof of equality is on the proposer.

1.4 PROJECT CONDITIONS

A. Field Measurements: Take field measurements prior to preparation of Shop Drawings and fabrication to ensure proper fitting. Show recorded measurements on final Shop Drawings. Coordinate fabrication schedule with construction progress to avoid delay.

PART 2 - PRODUCTS

2.1 MANUFACTURERS

A. Manufacturers: Subject to compliance with requirements, provide products by one of the following:
   1. Manufacturers of Panel Signs:
      a. ABC Architectural Signing System.
      b. Allenite.
      c. ASI Sign Systems, Inc.
      d. Best Manufacturing Company.
      e. Mohawk Sign Systems.
      f. Poblocki & Sons, Inc.
      g. The Supersine Company.
   2. Manufacturers of Dimensional Letters:
      a. Andco Industries Corp.
      b. A.R.K. Ramos Manufacturing Company, Inc.
      c. ASI Sign Systems, Inc.
      d. Gemini, Inc.
      e. Matthews International Corp.
      f. Metal Arts.
      g. Metallic Arts, Inc.
      h. The Southwell Company.
      i. Spanjer Brothers, Inc.
      j. Vomar Products, Inc.

2.2 MATERIALS

A. Photo etched faceplate with integral raised copy, Braille, and symbols, laminated to an opaque acrylic back plate.
   1. Use heat and pressure laminated photopolymer film system to form copy, Braille, symbols, and background color.

a. Raised copy, Braille, and symbols thickness: Not less than 1/32-inch.
b. Applied Braille plates are not acceptable.

B. Aluminum Sheet: Provide aluminum sheet of alloy and temper recommended by the sign manufacturer for the type of use and finish indicated, and with not less than the strength and durability properties specified in ASTM B 209 for 5005-H15.

C. Aluminum Castings: Provide aluminum castings of alloy and temper recommended by the sign manufacturer for the casting process used and for the use and finish indicated.

D. Fasteners: Use concealed fasteners fabricated from metals that are not corrosive to the sign material and mounting surface.

E. Anchors and Inserts: Use nonferrous metal or hot-dipped galvanized anchors and inserts for exterior installations and elsewhere as required for corrosion resistance. Use toothed steel or lead expansion bolt devices for drilled-in-place anchors. Furnish inserts, as required, to be set into concrete or masonry work.

2.3 PANEL SIGNS

A. General: Comply with requirements indicated for materials, thicknesses, finishes, colors, designs, shapes, sizes, and details of construction.
1. Produce smooth, even, level sign panel surfaces, constructed to remain flat under installed conditions within a tolerance of ±1/16-inch measured diagonally.

B. Unframed Panel Signs: Fabricate signs with edges mechanically and smoothly finished to conform with the following requirements:
1. Edge Condition: Square cut.
2. Edge Color: Edge color same as face color.
3. Corner Condition: Corners rounded to radius indicated.

C. Graphic Content and Style: Provide sign copy, symbols, and Braille text that complies with the requirements indicated for size, proportions, style, spacing, content, position, material, finishes, and colors of letters, numbers, and other graphic devices.
1. Signs featuring the International Symbol of Accessibility must comply with character height, proportion, symbols, finish, contrast, Braille, and other signage requirements of ANSI A117.1 - 1992 and the Americans with Disabilities Act. Where indicated, Grade 2 Braille translation to be provided by the sign manufacturer.

2.4 FINISHES

A. Colors and Surface Textures: For exposed sign material that requires selection of materials with integral or applied colors, surface textures or other characteristics

related to appearance, provide color matches indicated, or if not indicated, as selected by the ENGINEER from the manufacturer's standards.

B. Metal Finishes: Comply with NAAMM "Metal Finishes Manual" for finish designations and application recommendations.

C. Aluminum Finishes: Finish designations prefixed by "AA" conform to the system established by the Aluminum Association for designating aluminum finishes.
   1. Baked-Enamel Finish: AA-M4xC12C42R1x (Mechanical Finish: Manufacturer's standard, other non-directional textured; Chemical Finish: Chemical conversion coating, acid chromate-fluoride-phosphate pretreatment; Organic Coating: as specified below). Apply baked enamel in compliance with paint manufacturer's specifications for cleaning, conversion coating, and painting.
      a. Organic Coating: Thermosetting-modified acrylic enamel primer/topcoat system complying with AAMA 603.8 except with a minimum dry film thickness of 1.5 mils, medium gloss.
      b. Color(s): As selected by the ENGINEER from the manufacturer's standard colors.

2.5 SELF-LUMINOUS EXIT SIGNS

A. Provide self-luminous exit signs. Sign housing shall consist of an A42 color anodized extruded aluminum frame. The size, graphics, and background color of the legend shall conform to all relevant code requirements. The legend shall be protected by a tamper resistant acrylic shield. Luminication for exit signs shall be provided by sealed phosphor-coated tubes containing tritium located behind each portion of each letter. Signs shall be listed by UL as being capable of providing 10 to 15 years service life.

B. Surface mount exit signs above all exit doors. Provide manufacturers standard mounting bracket. Acceptable products are Everglow Signs by Self Powered Lighting Incorporated or Isolite Model 2040-01 Signs by Safety Light Corporation.

PART 3 - EXECUTION

3.1 INSTALLATION

A. General: Locate sign units and accessories where indicated, using mounting methods of the type described and in compliance with the manufacturer's instructions.
   1. Install signs level, plumb, and at the height indicated, with sign surfaces free from distortion or other defects in appearance.

B. Wall-Mounted Panel Signs: Attach panel signs to wall surfaces using the methods indicated below.

1. Silicone-Adhesive Mounting: Use liquid silicone adhesive recommended by the sign manufacturer to attach sign units. Use double-sided vinyl tape where recommended by the sign manufacturer to hold the sign in place until the adhesive has fully cured.
2. Shim Plate Mounting: Provide 1/8-inch thick concealed aluminum shim plates with predrilled and countersunk holes, at exterior locations. Attach the plate with fasteners and anchors suitable for secure attachment to the substrate. Attach panel sign units to the plate using the method specified above.

C. Dimensional Letters and Numbers: Mount letters and numbers using standard fastening methods recommended by the manufacturer for letter form, type of mounting, substrate or wall construction, and condition of exposure indicated. Provide heavy paper template to establish letter spacing and to locate holes for fasteners.

D. Flush Mounting: At smooth, uniform substrates and wall surfaces mount letters with backs in contact with the surface.

E. Projected Mounting: At irregular substrates and wall surfaces mount letters at the minimum projection distance from the surface, as recommended by the manufacturer.

3.2 CLEANING AND PROTECTION

A. After installation, clean soiled sign surfaces according to the manufacturer's instruction. Protect units from damage until acceptance by the OWNER.

++ END OF SECTION ++

SECTION 10523

FIRE PROTECTION SPECIALTIES

PART 1 - GENERAL

1.1 SECTION INCLUDES

A. Fire extinguishers.

1.2 REFERENCE STANDARDS

A. NFPA 10 - Standard for Portable Fire Extinguishers; 2013.

1.3 SUBMITTALS

A. Product Data: Provide extinguisher operational features.

PART 2 - PRODUCTS

2.1 FIRE EXTINGUISHERS

A. Fire Extinguishers - General: Comply with product requirements of NFPA 10 and applicable codes, whichever is more stringent.

B. Multipurpose Dry Chemical Type Fire Extinguishers: Carbon steel tank, with pressure gauge.
   1. Class: A type.
   2. Size: 2.5 pound (1.13 kg).
   3. Finish: Baked polyester powder coat, red color.

PART 3 - EXECUTION

3.1 INSTALLATION

A. Install in accordance with manufacturer's instructions.

B. Place extinguishers in cabinets.

++ END OF SECTION ++

SECTION10 811

BIRD CONTROL DEVICES

PART 1 - GENERAL

1.1 ECTION INCLUDES

A. Exterior rooftop mounted bird scare system..

1.2 SUBMITTALS

A. Product Data: Submit for all equipment under this section..

PART 2 - PRODUCTS

2.1 MANUFACTURERS

A. Eagle Eye Bird Control of Capetown, South Africa (https://usaeagleeye.com/) distributed in U.S. by Bird Barrier America, Inc. of Carson, CA (https://birdbarrier.com/)..

2.2 COMPONENTS

A. Primary Device: “Eagle Eye,” silver color. Provide wind powered kit model EE-1WS, mounting pole EE-XP6.

B. Secondary Device: “Pro-Peller”: Silver color, model EE-PPS.

PART 3 - EXECUTION

3.1 INSTALLATION

A. Install in accordance with manufacturer's written instructions.

++ END OF SECTION ++

SECTION 11217

SAMPLE PUMPS

PART 1 - GENERAL

1.1 SUMMARY

A. Provide all labor, materials, equipment, and incidentals required to furnish and install one self-priming process sample pumps complete and operational with motors, control equipment and accessories as shown on the Drawings and specified. A sample pump located at Airport WRF Chlorine Contact Basin will be used to collect grab samples for the chlorine analyzer.

1.2 SECTION INCLUDES

A. Chlorine Analyzer Sample Pumps.

1.3 RELATED SECTIONS

A. Section 01300, Submittals.

B. Section 01640, Materials and Equipment.

C. Section 01650, Starting of Systems.

D. Section 16225, Electric Motors 250 HP or Less.

1.4 SUBMITTALS

A. Descriptive submittals shall be made in accordance with the Data Reference Symbols defined in Section 01300, Submittals.
   1. Chlorine Sample Pumps: Shop Drawings and O&M Manuals:
      a. Letters of Certification of Compliance on materials, equipment, etc.
      b. Final Certified Drawings showing outline dimensions, foundation layout or mounting information, and other pertinent dimensions.
      c. Field erection instructions, assembly drawings and/or diagrams, detailed reference drawing lists, lists of erection details, and list of spare parts supplied with equipment.
      d. Shop Detail Drawings showing individual sub-assemblies and fabricated pieces with material specifications and other applicable data.

e. Installation instructions, operating and/or service manuals, and all other data pertinent to operating or servicing the complete apparatus. Preventative maintenance instructions and recommended frequency.
f. Schematic and wiring diagrams of power, control, and piping systems. A detailed description of operation shall be included for each diagram to describe all modes of operation of the system indicated. Where the integrated system requires interlocking and control of other components in normal operation, these components shall be included in the description of operation.
g. General bulletins and catalog cuts describing complete apparatus, including operating principles and fundamentals.
h. Service data sheets showing design performance, utility requirements, etc., as applicable to the specific duty for which the equipment is furnished.
i. Certified head and capacity curves for pumps. Impeller size furnished and maximum size available shall be noted on these data sheets.
j. Curves and/or data for overall range of operation from minimum to maximum capacity or load, showing capacity or load, utilities motive medium required, total or incremental differential head, and other pertinent information applicable to the equipment or its component assemblies.
k. Materials of construction of all components.
l. Renewal parts list with diagrammatic or cross-section drawings showing part identification. Material analysis or trades designation for each significant part is to be noted on parts lists or on a separate sheet.
m. Stuffing box sizes; packing sizes; specifications and arrangement; and mechanical seal details, specifications, etc., if furnished in equipment.
n. Bearing manufacturer's standard identification and/or interchangeable number for all anti-friction bearings in the equipment proper and its accessory items.

B. Shop Drawings: Submit for approval the following:
1. A copy of this specification section, with addendum updates included, and all referenced and applicable sections, with addendum updates included, with each paragraph check-marked to indicate specification compliance or marked to indicate requested deviations from specification requirements. Check marks (✓) shall denote full compliance with a paragraph as a whole. If deviations from the specifications are indicated, and therefore requested by the CONTRACTOR, each deviation shall be underlined and denoted by a number in the margin to the right of the identified paragraph, referenced to a detailed written explanation of the reasons for requesting the deviation. The ENGINEER shall be the final authority for determining acceptability of requested deviations. The CONTRACTOR shall furnish equipment and/or services as specified if an exception and/or deviation is rejected. The remaining portions of the paragraph not underlined will signify compliance on the part of the CONTRACTOR with the specifications. Failure to include a copy of the marked-up specification sections, along with justification(s) for any requested deviations to the

specification requirements, with the submittal shall be sufficient cause for rejection of the entire submittal with no further consideration.

2. The CONTRACTOR shall submit the preventive maintenance information package as part of the shop drawing submittal package to the ENGINEER for review and approval. **SHOP DRAWING SUBMITTAL PACKAGE WILL NOT BE APPROVED WITHOUT ACCEPTANCE OF PREVENTIVE MAINTENANCE INFORMATION.**

1.5 WARRANTY

A. The manufacturer shall warrant the units being supplied to the OWNER against defects in workmanship and material for a period of one year after start up and under normal use, operation, and service. The warranty shall cover parts and labor and shall be in printed form and apply to all similar units.

PART 2 - PRODUCTS

2.1 MANUFACTURERS

A. Acceptable Manufacturer:
   1. All sample pumps shall be Model JO4853L J5(S) as manufactured by Goulds Pumps or approved equal.

2.2 DESIGN

A. The sample pump shall be rated for continuous operation at a duty point of 12 gph, 25 feet of suction and 10 feet of discharge head.

2.3 COMPONENTS

A. Pump Heads:
   1. The pump heads shall be constructed of glass-filled polypropylene and will be resistant to the corrosive chemical such as sodium hypochlorite.
   2. The pump heads shall be capable of full-rated performance at ambient temperatures of 122° F.

B. Motor
   1. Motor shall be 1/2 HP, open fan-cooled and operate on 115V single-phase 60 Hz power.

2.4 SPARE PARTS

A. A complete set of spare parts shall be provided as recommended by the manufacturer. A list of spare parts shall be provided with the Shop Drawings.

PART 3 - EXECUTION

3.1 INSTALLATION

A. When all items of equipment have been properly installed, the CONTRACTOR shall carefully start equipment, operate, and adjust it through a sufficient number of cycles to demonstrate to the satisfaction of the ENGINEER that all items meet requirements of the specifications in all respects and are suitable for performing the Work intended under all possible operating conditions.

++ END OF SECTION ++

SECTION 11220

INLINE RAPID MIXERS

PART 1 - PART 1 - GENERAL

1.1 SUMMARY

A. CONTRACTOR shall provide all labor, materials, equipment, and incidentals as shown, specified, and required to furnish and install one new inline rapid mixer for mixing sodium hypochlorite and membrane permeate water.

B. Install one new inline rapid mixer on the common membrane permeate header, as shown on the Plans.

C. The CONTRACTOR shall have the responsibility to coordinate the installation of the equipment. Any revisions necessary shall be subject to the ENGINEER'S review and approval.

1.2 SECTION INCLUDES

A. Inline Rapid Mixer.

1.3 RELATED SECTIONS

A. Section 01300, Submittals.

B. Section 01640, Materials and Equipment.

C. Section 01650, Starting of Systems.

D. Section 09900, Painting.

E. Section 16225, Electric Motors 250 Horsepower or Less.

1.4 REFERENCE STANDARDS

A. All applicable AGMA, ASTM, OSHA, AFBMA and NEMA Standards.

1.5 PRODUCT DELIVERY, STORAGE, AND HANDLING

A. Procedures for product delivery are specified in Division 1, General Requirements.

B. Run speed reducers with rust inhibitive oil before shipment.

C. Spray preservative oil on internal reducer housing surfaces before shipment.

D. Manufacturer shall not ship any equipment to the job site until the Shop Drawings are approved by the ENGINEER. Any non-approved equipment shall be removed from the job site by the CONTRACTOR.

1.6 SUBMITTALS

A. Shop Drawings: Submit for approval, in conformance with Section 01300, Submittals, the following:
   1. Letters of Certification of Compliance on materials, equipment, etc.
   2. Drawings showing fabrication, dimensions, capacity, weight and materials of construction, electrical diagrams, and installation piping.
   3. Field assembly instructions, assembly drawings and/or diagrams, detailed reference drawing lists, and lists of assembly details.
   4. Shop detail drawings showing individual sub-assemblies and fabricated pieces with material specifications and other applicable data.
   5. Installation instructions, operating and/or service manuals, and all other data pertinent to operating or servicing the complete apparatus. Preventative maintenance instructions and recommended frequency.
   6. Schematic and wiring diagrams of power, control, and piping systems. A detailed description of operation shall be included for each diagram to describe all modes of operation of the system indicated. Where the integrated system requires interlocking and control of other components in normal operation, these components shall be included in the description of operation.
   7. General bulletins or catalog cuts showing operating principles and fundamentals.
   8. A complete process description detailing all process parameters.
   9. Documentation that the manufacturer has produced, supplied, and placed into satisfactory service, equipment similar to that specified herein.
   10. Recommended list of spare parts and safety equipment, along with price and ordering information.
   11. Electrical equipment ratings and data sheets for all devices.

B. No equipment shall be shipped until the ENGINEER approves the Shop Drawings.

C. Shop Test Results: Submit results of routine factory motor tests.

D. Field Test Results: Submit a written report giving the results of the required field tests.

E. Manufacturer's Reports: Submit written report of the results of each visit by a manufacturer's serviceman, including purpose and time of visit, tasks performed, and results obtained.

F. Operation and Maintenance Manuals: Submit complete Operation and Maintenance Manuals in conformance with the Operation and Maintenance Manuals Section of Section 01300, Submittals.

G. A copy of this specification section, with addendum updates included, and all referenced and applicable sections, with addendum updates included, with each paragraph check-marked to indicate specification compliance or marked to indicate requested deviations from specification requirements. Check marks (✓) shall denote full compliance with a paragraph as a whole. If deviations from the specifications are indicated, and therefore requested by the CONTRACTOR, each deviation shall be underlined and denoted by a number in the margin to the right of the identified paragraph, referenced to a detailed written explanation of the reasons for requesting the deviation. The ENGINEER shall be the final authority for determining acceptability of requested deviations. The CONTRACTOR shall furnish equipment and/or services as specified if an exception and/or deviation is rejected. The remaining portions of the paragraph not underlined will signify compliance on the part of the CONTRACTOR with the specifications. Failure to include a copy of the marked-up specification sections, along with justification(s) for any requested deviations to the specification requirements, with the submittal shall be sufficient cause for rejection of the entire submittal with no further consideration.

H. The CONTRACTOR shall submit the preventive maintenance information package as part of the shop drawing submittal package to the ENGINEER for review and approval. **SHOP DRAWING SUBMITTAL PACKAGE WILL NOT BE APPROVED WITHOUT ACCEPTANCE OF PREVENTIVE MAINTENANCE INFORMATION.**

1.7 WARRANTY

A. The manufacturer shall warrant the units being supplied to the OWNER against defecting in workmanship and material for a period of twelve (12) months after start up and under normal use, operation, and service. The warranty shall cover parts and labor and shall be in printed form and apply to all similar units.

PART 2 - PART 2 - PRODUCTS

2.1 2.1 MANUFACTURERS

A. Acceptable Manufacturers:
   1. Hayward Gordon, HIM-100-24 Dynamic Inline Mixer.
   2. Or approved equal.

B. The naming of a manufacturer in this Specification is not an indication that the manufacturer's standard equipment is acceptable in lieu of the specified component features. Naming is only an indication that the manufacturer may have the capability of engineering and supplying a system as specified.

2.2 2.2 DESIGN CRITERIA

A. Job Conditions:
   1. Outdoor Installation.
   2. Mixed Liquid – 100% mixed Membrane Permeate Water containing Sodium Hypochlorite.
   3. Outdoor Temperature Range: 20° F to 122° F.
   4. Membrane Permeate Water Temperature Range: 45° F to 90° F.
   5. Continuous Mixing.
   6. Elevation: CL 1222.51' +/-.
   7. Pipe Diameter: 24-inches.
   8. Flow Rate: 10 MGD.
   9. System Pressure: 50 PSI.
   10. Mixing
   11. Outdoor Environment: Rain, sun, wind, dust.

B. Inline Rapid Mixer:
   1. Number of units: One.
   2. Number of impellers: Two.
   3. Impeller type: Two (2) opposed pitched blade turbine.
   4. Minimum motor size: 10 Hp.
   5. Impeller diameter, minimum: 13-inches.
   6. Impeller rotative speed: 450 rpm.

2.3 2.3 MATERIALS

A. Gear Reducer: Close-grained cast iron, stress relieved and reinforced.

B. Impeller Shaft: One piece, 316 Stainless Steel.

C. Impeller: 316 Stainless Steel.

D. Output Shaft: 316 Stainless Steel.

E. Output Coupling: 316 Stainless Steel.

F. Mixer Vessel: 316 Stainless Steel.

G. Flow Straightening Vanes: 316 Stainless Steel.

H. Ring Baffle: 316 Stainless Steel.

2.4 2.4 FABRICATION AND MANUFACTURE

A. Impeller:
   1. Type: Two (2) opposed pitched blade turbine, two per shaft.

2. Grind all edges smooth.
3. Statically balanced.
4. Use of stabilizing rings and fins: Unacceptable.
5. Bolted construction, connected to shaft with hook key.
6. Maximum stress in any impeller component at design conditions: 11,000 psi.

B. Speed Reducer:
   1. General:
      a. Designed, manufactured and rated per AGMA Standards.
      b. Maximum noise level: 85 dBA at 3 feet away from drive assembly.
      c. To ensure system responsibility the gear box shall be designed, manufactured, tested and warrantee by the mixer manufacture.
   2. Type:
      a. Solid oversized upper vertical parallel shaft design.
      b. Totally enclosed.
   3. Gears:
      a. Double or triple reduction.
      b. Helical and/or spiral bevel gearing.
      c. Worm gears not acceptable.
      d. AGMA No. 10 or better (AGMA 390.03).
   4. Minimum service factor: 2.0 based on nameplate Hp of motor.
   5. Bearings:
      a. Ball or roller, anti-friction type.
      b. Oil or grease lubricated.
      c. Thrust bearings independent, designed to carry 125% of shaft and impeller loads.
      d. All bearings within drive including output shaft bearing: AFBMA B-10 minimum life of 100,000 hours at full motor nameplate horsepower and at design speed.
      e. Located within drive assembly.
   6. Gearbox Shaft:
      a. Maximum stress at max load: 8,000 psi.
   7. Case:
      a. Removable cover to provide access to gear reducer and all bearings without removing unit.
      b. Provide lifting lugs.
      c. Stress relieved and reinforced.

C. Impeller Shaft:
   1. Overhung design, no underwater steady bearing.
   2. Maximum stress at maximum operating load: 9,000 psi.
   3. One piece, output coupled to gearbox by rigid coupling.
   4. Minimum extension shaft diameter of 2.5".
   5. Shaft to operate below 65% of 1st critical speed.

6. Provide above surface access to coupling to permit coupling disconnect without dewatering basin or shaft removal.
7. Impeller shaft connection shall be sleeve type between gearbox and mixer shaft. Rating: 200% of full torque and 150% of axial load.

D. Shaft Seal:
1. The mixer will be sealed by a seal housing box fitted with John Crane type 32 dry running mechanical seal.
2. A vent port with ball valve is provided to assist with evacuating air from seal area at startup.

E. Motor:
1. Squirrel cage induction type, for continuous duty in a humid outdoor environment with full mill and chemical duty features. See Section 16225, Electric Motors 250 Horsepower or Less for motor specifications.
2. 460V, 3-phase, 60 Hz, energy efficient.
3. Class H insulation, Class B temperature rise of 50° C ambient at 1.0 service factor. Service factor: 1.15.
4. Lifting lugs.
5. Easily accessible, torsionally resilient flexible coupling between motor and speed reducer.
6. Provide OSHA approved coupling guards.
7. Synchronous speed: 1,800 rpm.

F. Mounting Arrangement:
1. Mount mixer with saddle type foot support for anchoring vessel to concrete equipment pad as shown on Drawings.
2. Provide lifting lug on both side of drive flange.
3. Mounted mixer to prevent any defection in piping system.

G. Baffles:
1. Provide and install flow straightening vanes and ring baffle for optimum mixing, as required by manufacturer's requirements.
2. Baffles to be supplied and mounted by the manufacturer.

H. Shop Painting:
1. All welds shall be thoroughly cleaned and ground smooth in preparation for painting. All iron and steel surfaces, except motors and speed reducers, shall be solvent cleaned in accordance with SSPC-SP1 before shop primer is applied.
2. All iron and steel surfaces, except motors, speed reducers, and stainless steel shall be given a shop coat of the manufacturer's standard rust inhibitive primer.

PART 3 - PART 3 - EXECUTION

3.1 3.1 FIELD QUALITY CONTROL

A. Manufacturer's Field Services
   1. Provide services of manufacturer's field representative. Field representative shall be a factory-trained person employed by the manufacturer, with significant experience with startup and training of equipment of this type.
   2. Field representative to:
      a. Be present during installation and alignment of equipment.
      b. Inspect and verify equipment properly installed per manufacturer's recommendations.
      c. Direct initial startup and instruct plant personnel for proper operation and maintenance of equipment.
      d. Preside at field test of equipment.
      e. Instruct the OWNER'S personnel in operation and maintenance of equipment. Instruction shall include theory, operational procedures for startup, shutdown, routine and abnormal operation, as well as preventive and unscheduled maintenance procedures, including assembly and disassembly of equipment.
      f. Submit a certification of proper installation and satisfactory performance.
      g. Perform testing, startup, and training.
         1) Provide field representative for a minimum of four hours, one trip for Pre-Operational Testing.
         2) Provide field representative for a minimum of eight hours, one trip for start-up testing.
         3) Provide field representative for a minimum of eight hours, one trip, for operations and maintenance training.
   3. Manufacturer shall include all costs for travel and living expenses for field representative in his bid price.

3.2 3.2 ADJUSTMENTS AND TESTING

A. Operating Checks:
   1. Pre-operation checks:
      a. Impeller shaft alignment.
      b. Speed reducer - bearing lubrication.
      c. Impeller rotation.
      d. Motor shaft - input shaft lubrication.
      e. System Pressure
   2. Post-operation checks:
      a. Check bearing temperature against manufacturer's recommendation.
      b. Check for motor overload.
      c. Check shaft alignment.
         1) Test impeller shaft by hand turn operation.

2) Deflection: Not to exceed 1/8-inch per 10 feet of length.

d. Check vibration:
   1) Test gearbox unit for vibration when operated by motor.
   2) Maximum allowable deflection: 5 mil anywhere on motor or speed reducer.

B. Start-Up Testing:
   1. Water Test:
      a. With pressurized pipe at normal operating condition, operate mixer for three hours.
      b. Measure power consumption, shaft speed, and vibration every five minutes for the first hour, and once every half hour thereafter until completion of the test.
   2. Testing:
      a. Costs:
         1) The OWNER will pay for energy costs associated with testing.
         2) Supplier will pay for all other costs associated with testing and retesting.
      b. Failure to perform:
         1) Equipment not meeting specified performance requirements will not be accepted.
         2) Supplier shall remove equipment, modify, reinstall, and retest as required to meet test requirements.
      c. Test personnel and equipment:
         1) Personnel: Qualified and familiar with operation of equipment furnished.
         2) Equipment: Calibrated.
      d. All tests shall be performed in the presence of the ENGINEER and the OWNER Representatives.
      e. Schedule
         1) Coordinate testing with the CONTRACTOR, the OWNER, and the ENGINEER.

++ END OF SECTION ++

SECTION 11285

HYDRAULIC GATES

PART 1 - GENERAL

1.1 SUMMARY

A. CONTRACTOR shall provide all labor, materials, equipment, and incidentals as shown, specified, and required to furnish and install stainless steel gates, and appurtenances.

B. Gate mountings shall be supplied by the gate manufacturer and all other appurtenances shall be provided by the CONTRACTOR.

1.2 SECTION INCLUDES

A. Heavy-duty fabricated stainless steel slide Gates.

1.3 REFERENCES

A. American Society of Mechanical Engineers (ASME)
   1. Section IX - Boiler and Pressure Vessel Code - Welding and Brazing Qualifications.

B. American Water Works Association (AWWA)
   1. AWWA C 561 - Fabricated Stainless Steel Gates.

C. American Welding Society (AWS)
   1. D1.6 - Structural Welding Code-Stainless Steel.

D. American Society for Testing Materials (ASTM)
   1. A 276 - Stainless and Heat-Resisting Steel Bars and Shapes, Type 304 and Type 316.
   2. B 584 - Copper Alloy Sand Castings for General Application.
   3. D 1248 - Standard Specification for Polyurethane Plastics Extrusion Materials for Wire and Cable.
   4. D 2000 - Standard Classification for Rubber Products in Automotive Applications.
   5. D 4020 - Standard Specification for Ultra-High Molecular-Weight Polyethylene Molding and Extrusion Materials.

1.4 RELATED SECTIONS

A. Section 01300, Submittals.

B. Section 01640, Materials and Equipment.

C. Section 01650, Starting of Systems.

D. Section 03300, Cast-in-Place Concrete.

E. Section 03600, Grout.

F. Section 09900, Painting (Specifications for surface preparation and shop priming required under Section 11285, Hydraulic Gates, are to be done in conformance with Section 09900, Painting).

G. Section 13447, Electric Motor Actuators.

H. Division 16, Electrical.

I. Division 17, Instrumentation.

1.5 QUALITY ASSURANCE

A. Manufacturer's Qualifications:
   1. Manufacturer shall have a minimum of five years of experience in the production of substantially similar equipment and shall show evidence of satisfactory operation in at least five installations.
   2. All gates shall be the product of one manufacturer.

B. Shop Tests:
   1. Test each gate fully assembled in the vertical position for proper seating.
   2. Fully open and close gate disc in its guide system to ensure that it operates freely.
   3. Operate and test floor stands, bench stands, and motor operators to ensure proper assembly and operation. Motor operators shall be tested by the operator manufacturer prior to shipment.

1.6 SUBMITTALS

A. Descriptive Submittals shall be made in accordance with the Data Reference Symbols defined in Section 01300, Submittals.
   1. Shop Drawings:
      a. Letters of Certification of Compliance on materials, equipment, etc.
      b. Final Certified Drawings showing outline dimensions, foundation layout or mounting information, and other pertinent dimensions.
      c. Shop Detail Drawings showing individual sub-assemblies and fabricated pieces with material specifications and other applicable data.
      d. Schematic and wiring diagrams of power, control, and piping systems. A detailed description of operation shall be included for each diagram to

describe all modes of operation of the system indicated. Where the integrated system requires interlocking and control of other components in normal operation, these components shall be included in the description of operation.

e. General bulletins and catalog cuts describing complete apparatus, including operating principles and fundamentals.
f. Materials of construction of all components.
g. Renewal parts list with diagrammatic or cross-section drawings showing part identification. Material analysis or trades designation for each significant part is to be noted on parts lists or on a separate sheet.
h. Stuffing box sizes; packing sizes; specifications and arrangement; and mechanical seal details, specifications, etc., if furnished in equipment.
i. Deviations from the Contract Documents.

2. O&M Manuals:
   a. Final Certified Drawings showing outline dimensions, foundation layout or mounting information, and other pertinent dimensions.
   b. Shop Detail Drawings showing individual sub- assemblies and fabricated pieces with material specifications and other applicable data.
   c. Installation instructions, operating and/or service manuals, and all other data pertinent to operating or servicing the complete apparatus. Preventative maintenance instructions and recommended frequency.
   d. General bulletins and catalog cuts describing complete apparatus, including operating principles and fundamentals.
   e. Materials of construction of all components.
   f. Renewal parts list with diagrammatic or cross-section drawings showing part identification. Material analysis or trades designation for each significant part is to be noted on parts lists or on a separate sheet.
   g. Stuffing box sizes; packing sizes; specifications and arrangement; and mechanical seal details, specifications, etc., if furnished in equipment.
   h. Test reports, maintenance data and schedules, description of operation, and spare parts information.
   i. Furnish Operation and Maintenance Manuals in conformance with the requirements of Section 01300, Submittals.

B. Field Test Results:
   1. Submit a written report giving the results of the field tests required.

C. Lubricant Specification: Furnish a lubricant specification for the type and grade necessary to meet the requirements of the equipment.

D. A copy of this specification section, with addendum updates included, and all referenced and applicable sections, with addendum updates included, with each paragraph check-marked to indicate specification compliance or marked to indicate requested deviations from specification requirements. Check marks (✓) shall denote full compliance with a paragraph as a whole. If deviations from the specifications are

indicated, and therefore requested by the CONTRACTOR, each deviation shall be underlined and denoted by a number in the margin to the right of the identified paragraph, referenced to a detailed written explanation of the reasons for requesting the deviation. The ENGINEER shall be the final authority for determining acceptability of requested deviations. The CONTRACTOR shall furnish equipment and/or services as specified if an exception and/or deviation is rejected. The remaining portions of the paragraph not underlined will signify compliance on the part of the CONTRACTOR with the specifications. Failure to include a copy of the marked-up specification sections, along with justification(s) for any requested deviations to the specification requirements, with the submittal shall be sufficient cause for rejection of the entire submittal with no further consideration.

E. The CONTRACTOR shall submit the preventive maintenance information package as part of the shop drawing submittal package to the ENGINEER for review and approval. **SHOP DRAWING SUBMITTAL PACKAGE WILL NOT BE APPROVED WITHOUT ACCEPTANCE OF PREVENTIVE MAINTENANCE INFORMATION.**

1.7 PRODUCT DELIVERY, STORAGE, AND HANDLING

A. Deliver materials to the site to insure uninterrupted progress of the Work.
   1. Deliver anchor bolts and anchorage devices which are to be embedded in cast-in-place concrete in ample time to maintain the construction schedule.

B. Handle all gates and appurtenances properly, in accordance with manufacturer's recommendations. Gates which are distorted or otherwise damaged will not be acceptable. Protect all steam threads, bolt threads and ends from damage.

C. Store materials to permit easy access for inspection and identification.

D. Store all mechanical equipment in covered storage off the ground and prevent condensation.

1.8 GATE SCHEDULE

A. The Gate Schedule is included at the end of this Section. This schedule is provided for general information on specific gates. In the event of discrepancies between this schedule and the Plans and Specifications, the information on the Plans shall govern.

PART 2 - PRODUCTS

2.1 MANUFACTURERS

A. The gates shall be as manufactured by one of the following (Manufacturers listed in alphabetical order):
   a. Fontaine

b. Golden Harvest, Inc., Burlington, WA.
c. Waterman Industries
d. Whipps, Inc., Athol, MA
e. Or, Approved Equal.
f. The naming of a manufacturer in this Specification is not an indication that the manufacturer's standard equipment is acceptable in lieu of the specified component features. Naming is only an indication that the manufacturer may have the capability of engineering and supplying a system as specified.

2.2 MATERIALS

A. All materials used in the manufacturing of the gates shall be of the best quality used for the purpose of commercial production.

B. General: Design equipment to be suitable for the process and service conditions described below and in the Gate Schedule.
   1. Design gates to safely withstand conditions listed in the Gate Schedule.
   2. Gates shall be substantially watertight with leakage less than 0.5 gpm per foot of seating perimeter at design head.
   3. Manual operators shall turn right to close, unless otherwise specified. Operators shall indicate the direction of operation.
   4. Bolts, studs, cap screws, and adjusting screws shall be of ample section to withstand the force created by operation of the gate under a full head of water.
   5. Downward opening gates shall be capable of being lowered to an elevation below the invert of the channel or opening.
   6. Gates shall open to not less than 6-inches above the maximum water level in the channel in which they are installed.

C. Materials of Construction for Gates:
   1. Stainless Steel: For frame, slide, slide stiffeners, rail, yoke, pedestals, wall brackets, and wall thimbles ASTM A276, Type 316 stainless steel. All metal for gate and wall thimble parts shall have a minimum thickness of 1/4-inch.
   2. Frame, top stiffener, vertical stiffener, center stiffener, seal landing, and seal retainer shall be made of stainless steel consistent with ASTM A240.
   3. Bronze Casting: For operating nut, thrust nut, and lift nut, ASTM B584 Alloy 865.
   4. All bolts, studs, cap screws, and adjusting screws shall be of Type 316 stainless steel.
   5. Bolts and nuts shall have hexagon heads.
   6. Gasket material and installation shall conform to manufacturer's recommendations.
   7. Disc:
      a. Stainless Steel: Fabricate the slide or disc of ASTM A276, Type 316L stainless steel plate reinforced with structural shapes attached by welding.

b. Provide reinforcing to limit deflection under full head to not more than 1/360 of the span, or 1/16-inch maximum at seal points, whichever is less.
c. Extend reinforcing ribs into the guides overlapping the seating surface of the guide.
d. Disc shall be sized to engage into the guides a minimum of 1-inch on each side.
e. Weld stem mounting guides to the disc.

8. Disc Guides:
   a. Stainless Steel: Guides shall be of Type 316L stainless steel formed and welded to create a one-piece type construction using formed plate. Gussets shall be provided to accommodate the load on the frame in unseating head conditions.
   b. Guides shall be designed for maximum rigidity in accordance with the latest revision of AWWA C561 to take the load developed at maximum design head and the thrust developed during gate operation, including the stall torque of the electric actuator, under maximum head.
   c. Guides shall extend beneath the opening a sufficient amount to completely support the disc in the fully open or closed position.
9. Stem:
   a. Operating stems shall be of Type 316 stainless steel and designed as specified below. Stems shall have a minimum diameter of 1-1/2 inches.
   b. Design stem to transmit in compression at least 2-1/2 times the rated output of the operating mechanism with an 80 lb effort on the crank or handwheel.
   c. Determine the critical buckling load using the Euler column formula, using C = 2. Where hydraulic cylinder lifts are used, the stem design force shall not be less than 1.25 times the output thrust of the hydraulic cylinder with a pressure equal to the maximum working pressure of the hydraulic fluid supply. Where electric motor driven lifts are used, the stem design force shall not be less than 1.25 times the output thrust of the unit in the stalled motor condition.
   d. Stems shall have a slenderness ratio (L/R) less than 200.
   e. Threaded portion of the stem shall have machined cut or machine rolled threads of the Acme type, having a surface roughness finish of 16 micro-inches or less. Join stems of more than one section by stainless steel couplings threaded and keyed, or bored and pinned, to the stems. All threaded and keyed couplings of the same size shall be interchangeable. Provide rising stems with an adjustable stop collar on the stem on manually operated gates.
   f. Connect the stem to the disc by means of a bolted connection with a minimum of two attachment bolts.
10. Yoke (For Self Contained Type Gates):
    a. Furnish tops of the extended guides with a yoke for mounting of the lifting device.

b. Construct the yoke of structural shapes of sufficient strength to take the full thrust created by operating the gate under the maximum specified head.
c. Attach the yoke to the framework by bolting or welding so as to permit removal of the gate slide and stem.

11. Lower Seals:
    a. Mount a specially shaped resilient neoprene seal on the bottom of the disc or guide frame to provide flush-bottom closure for gates.
    b. Shape of the seal shall produce a seating surface having a minimum width of 3/4-inch, and the seal will extend beyond the seating surface of the gate frame.
    c. Vertical face of the seal shall be in contact with the seating surface of the guide to provide a proper seal at the corners.
12. Side and Upper Seals:
    a. Side and upper seals shall be self-adjusting seals with compression cord fabricated from ultra high molecular weight (UHMW) polyethylene or UHMW polymer. Weir gates to have the self-adjust seal on the bottom versus top for slide gates. UHMW bearing strips shall be mechanically retained to lock seat in place. Elastomeric seals such as J-Seals and Crown seals or adjust seal designs are not acceptable.

2.3 APPURTENANCES

A. Stem Guides:
1. Guides shall be adjustable in two directions and shall be spaced so that stems have a maximum unsupported length of 84-inches.
2. Anchor bolts for stem guides shall be Type 316 stainless steel.

B. Anchor Bolts:
1. Provide Type 316 stainless steel anchor bolts as required for stem guides, floorstands, and all equipment or appurtenances which must be secured to concrete walls or floors. Anchor bolts shall be of ample size and strength for the purpose intended, and shall be furnished by the manufacturer. Anchor bolts shall be hooked, and provided for direct embedment during placement of concrete. Anchor bolts shall conform to the requirements of Section 05051, Anchor Bolts, Toggle Bolts and Concrete Inserts.

C. Stem Cover:
1. Furnish all stems with a clear polycarbonate or butyrate plastic pipe stem cover. Covers shall be furnished with a cast aluminum adaptor for mounting covers to floor stands. Stem covers shall be designed and furnished with gasketing and breathers to eliminate water intrusion into operators and condensation within the covers.
2. Stem covers shall have with legible markings showing as a minimum the gate position at 1/4 open, 1/2 open, 3/4 open and full open.

D. Electric Operators:
   1. Electric motor operators shall be furnished as shown on the Slide Gate Schedule, in accordance with the requirements of Section 13447, Electric Motor Actuators.

E. Identification: Identify each gate with a stainless steel manufacturer's nameplate stamped with the approved designation as shown in the Gate Schedule, below. Manufacturer's nameplate shall be permanently fastened to the gate at the factory.

2.4 SURFACE PREPARATION AND PAINTING

A. Clean, prime coat, and finish coat ferrous metal surfaces of equipment in the shop in accordance with the requirements of Section 01640, Materials and Equipment, and Section 09900, Painting.

B. Coat machined, polished and non-ferrous surfaces bearing surfaces and similar unpainted surfaces with corrosion prevention compound which shall be maintained during storage and until equipment begins operation.

C. Surface preparation and painting shall conform to Section 09900, Painting.

D. Certify, in writing, that the shop primer and coating system conforms to the requirements of Section 09900, Painting.

2.5 SPECIAL TOOLS

A. Furnish two sets of any special tools required for normal operation and maintenance.

2.6 LUBRICANTS

A. Furnish Food grade oil and grease meeting NSF 61 for water applications as required for initial operation. Use products recommended by the manufacturer.

2.7 GATE SCHEDULE

A. Schedule 11285 is the Gate Schedule. Conform to type, size, operation and other data specified, unless otherwise approved by ENGINEER.

B. Provide all gates as shown on the Drawings and listed in the Gate Schedule.

PART 3 - EXECUTION

3.1 INSTALLATION

A. Gates shall be installed in accordance with manufacturer's recommendations.

B. Gates shall be installed at the respective location as shown on the Plans.

C. Gate stems shall be plumb and vertical. Each gate shall be adjusted for smooth and easy operation.

D. Brace guides and frames during placement of concrete.

E. Set anchor bolts in accord with approved manufacturers drawings.

F. Provide minimum of 1-inch of non-shrink grout below all floor stands and between gate frame and wall on wall mounted gates.

G. Adjust all parts and components as required to provide correct operation.

3.2 FIELD TESTS

A. After CONTRACTOR and ENGINEER have mutually agreed that the equipment installation is complete and ready for continuous operation, CONTRACTOR and a qualified field service representative of the manufacturer shall conduct a functional field test and a leakage test of each gate in the presence of ENGINEER to demonstrate that each gate furnished will function correctly and that maximum permissible leakage is not exceeded.
   1. Functional Tests:
      a. Each gate with appurtenances shall be field tested. Tests shall demonstrate to ENGINEER that each part and all parts together function in the manner intended. All necessary testing equipment and manpower shall be provided by CONTRACTOR at his expense. OWNER will furnish all power, and incidental material and labor required for the tests.
   2. Leakage Tests:
      a. Maximum permissible leakage shall be in accordance with the requirements of Paragraph 2.2.B.2. Excess leakage shall be reduced to meet specified requirements by adjusting the gate or replacement will be required.
   3. In the event that the manufacturer is unable to demonstrate to ENGINEER that his equipment meets the requirements of the tests, the deficient equipment will be rejected and CONTRACTOR shall adjust and/or modify and retest the equipment as often as necessary to meet the specified requirements. No separate payments shall be made for adjustments and/or modifications.

3.3 MANUFACTURER'S FIELD SERVICE

A. A factory employed and trained representative of the manufacturer shall visit the site and provide installation and start-up services, as specified in Section 01650, Starting of Systems. The factory employed representative shall make six visits to the site. The six visits will be split as needed between installation assistance and supervision, checking the completed installation and start-up of the system, and for training on the operation and maintenance of the gates. Trips to include:
   1. Installation supervision: 1 trip, 1 day.
   2. Dry wall installation inspection and operation: 1 trip, 4 days.

3. Wet wall functional and leakage testing: 1 trip, 4 days.
4. Training and remaining startup: 1 trip, ½ day.

B. Equipment Start-up: A factory employed representative of the manufacturer shall visit the site and provide installation and start-up services as specified in Section 01650, Starting of Systems.

C. Training: A factory employed and trained representative of the manufacturer shall visit the site and provide operator training services, in addition to equipment start-up services, as specified in Section 01650, Starting of Systems. A minimum of one day of training and of training will be required.

D. All costs, including travel, lodging, meals, and incidentals, shall be considered as included in the CONTRACTOR'S lump sum bid price.

GATE SCHEDULE										
Equipment Number	**Gate Location**	**Mounting Style / Frame Type / Material**	**Shape of Wall Opening / Top Seal (Y/N)**	**Invert (ft) / Operating Floor Elevation (ft)**	**Size (WxH, in)**	**Gate Opening Direction**	**Min Gate Travel (ft)**	**Seating / Unseating (ft)**	**Type of Closure**	**Operator / Operator Mounting Style**
TBD	RAW WATER PUMP STATION INTAKE SLIDE GATE	WALL MOUNTED / NON-SELF CONTAINED / SST	ROUND / Y	1219.45 / 1230.50	24 x 24	UPWARD	2	6/6	STANDARD	ELECTRIC OPERATOR / FLOOR MOUNTED

++ END OF SECTION ++

SECTION 11295

HYDRAULIC VALVES

PART 1 - GENERAL

1.1 SUMMARY

A. Furnish and install all valves and valve accessories for surface water, potable water, chemicals, air, as indicated in the Drawings and as specified herein, including all appurtenances required for a complete and operational installation.

1.2 SECTION INCLUDES

A. Gate valves.

B. Butterfly valves.

C. Check valves.

D. Plug valves.

E. Ball valves.

F. Air/Vacuum Relief Valves

G. Solenoid Valves

H. Pressure Reducing Valves

I. Needle Valve

J. Valve appurtenances.

1.3 RELATED SECTIONS

A. Section 01300, Submittals.

B. Section 01640, Materials and Equipment.

C. Section 01650, Starting of Systems.

D. Section 09900, Painting.

E. Section 13447, Electric Motor Actuators.

F. Section 15050, Piping Systems.

1.4 REFERENCES

A. AWWA C500, Metal Seated Gate Valves For Water Supply Service.

B. AWWA C504, Rubber Seated Butterfly Valves.

C. AWWA C510, Double Check Valve Backflow Prevention Assembly.

D. ASME B16.1, Gray Iron Pipe Flanges and Flanged Fittings.

E. ASME B46.1, Surface Texture (Surface Roughness, Waviness, and Lay).

F. ASME A126, Standard Specification for Gray Iron Castings for Valves, Flanges, and Pipe Fittings.

G. ASTM A269, Standard Specification for Seamless and Welded Austenitic Stainless Steel Tubing for General Service.

H. ASTM A48, Standard Specification for Gray Iron Castings.

I. ASTM A536, Standard Specification for Ductile Iron Castings.

J. ASTM A582, Standard Specification for Free-Machining Stainless Steel Bars.

K. ASTM B271, Standard Specification for Copper-Base Alloy Centrifugal Castings.

L. ASTM D429, Standard Test Methods for Rubber Property—Adhesion to Rigid Substrates.

M. ASTM D1784, Standard Specification for Rigid Poly (Vinyl Chloride) (PVC) Compounds and Chlorinated Poly(Vinyl Chloride) (CPVC) Compounds.

N. ASTM F439. Standard Specification for Chlorinated Poly (Vinyl Chloride) (CPVC) Plastic Pipe Fittings, Schedule 80.

O. All other applicable ASTM and ANSI Standards.

1.5 SUBMITTALS

A. Descriptive submittals shall be made in accordance with the Data Reference Symbols defined in Section 01300, Submittals.
   1. All Valves: Shop Drawings and O&M Manuals:
      a. Final Certified Drawings showing outline dimensions, foundation layout or mounting information, and other pertinent dimensions.
      b. Field erection instructions, assembly drawings and/or diagrams, detailed reference drawing lists, lists of erection details, and list of spare parts supplied with equipment.

c. Shop Detail Drawings showing individual sub- assemblies and fabricated pieces with material specifications and other applicable data.
d. Installation instructions, operating and/or service manuals, and all other data pertinent to operating or servicing the complete apparatus. Preventative maintenance instructions and recommended frequency.
e. General bulletins and catalog cuts describing complete apparatus, including operating principles and fundamentals.
f. Service data sheets showing design performance, utility requirements, etc., as applicable to the specific duty for which the equipment is furnished.
g. Materials of construction of all components.
h. Renewal parts list with diagrammatic or cross-section drawings showing part identification. Material analysis or trades designation for each significant part is to be noted on parts lists or on a separate sheet.
i. Stuffing box sizes; packing sizes; specifications and arrangement; and mechanical seal details, specifications, etc., if furnished in equipment.
j. Bearing manufacturer's standard identification and/or interchangeable number for all anti-friction bearings in the equipment proper and its accessory items.

B. A copy of this specification section, with addendum updates included, and all referenced and applicable sections, with addendum updates included, with each paragraph check-marked to indicate specification compliance or marked to indicate requested deviations from specification requirements. Check marks (✓) shall denote full compliance with a paragraph as a whole. If deviations from the specifications are indicated, and therefore requested by the CONTRACTOR, each deviation shall be underlined and denoted by a number in the margin to the right of the identified paragraph, referenced to a detailed written explanation of the reasons for requesting the deviation. The ENGINEER shall be the final authority for determining acceptability of requested deviations. The CONTRACTOR shall furnish equipment and/or services as specified if an exception and/or deviation is rejected. The remaining portions of the paragraph not underlined will signify compliance on the part of the CONTRACTOR with the specifications. Failure to include a copy of the marked-up specification sections, along with justification(s) for any requested deviations to the specification requirements, with the submittal shall be sufficient cause for rejection of the entire submittal with no further consideration.

C. The CONTRACTOR shall submit the preventive maintenance information package as part of the shop drawing submittal package to the ENGINEER for review and approval. **SHOP DRAWING SUBMITTAL PACKAGE WILL NOT BE APPROVED WITHOUT ACCEPTANCE OF PREVENTIVE MAINTENANCE INFORMATION.**

PART 2 - PRODUCTS

2.1 GENERAL

A. All buried valves shall be provided with a valve box and extension stem.

2.2 GATE VALVES

A. Cast Iron Gate Valves:
   1. Gate valves shall conform to AWWA C509, 200 psi working pressure, resilient seated, iron body, bronze mounted, non-rising stem. All valves shall have an opening direction of counter-clockwise. All gate valves shall be as manufactured by Mueller Company, American Flow Control; or approved equal.
   2. All above ground gate valves shall have handwheel/lever/t-handle geared operators or electric actuators as specified in the Equipment Schedule or as shown on the Drawings. All buried valves shall be equipped with valve box and extension stem per City of Chandler standard details and either a handwheel and pedestal, actuator and pedestal, or with operating nut as specified in the Equipment Schedule or as shown on the Drawings. Valves specified with an operating nut shall be installed with a ground level valve position indicator. Valves with actuators shall have sealed geared actuators with extension stems and torque tubes.
   3. Valves will be provided with torque tube pedestal assemblies where pedestals are indicated on the Plans. Assemblies shall consist of a torque tube and a pedestal. Torque tubes shall be designed for a maximum deflection of no more than 0.75 degrees when measured at the disc edge. The pedestal shall be made of high strength cast iron and shall support the full weight of the torque tube by use of corrosion resistant thrust bearings located in the pedestal. Design of a torque tube shall allow ±2-inches of free movement along the tube longitudinal axis. Pedestal shall have a height of 3 feet above the operating floor. Torque tube floorstand assemblies shall be factory assembled and shipped as integral units. For buried valves with actuators, the actuators shall be located on pedestals with overriding handwheel. See Section 13447, Electric Motor Actuators, for Actuator Specifications.

2.3 BUTTERFLY VALVES

A. Butterfly valves – AWWA C504
   1. Butterfly valves shall be tight-closing, rubber-seat type with rubber seats that are securely fastened to the valve body or valve disc. No metal-to-metal seating surfaces shall be permitted. Valves shall be bubble-tight at rated pressures with flow in either direction and shall be satisfactory for applications involving valve operation after long periods of inactivity. Valve disc shall rotate 90 degrees from the full open position to the tight shut position. The handwheel operators shall be traveling nut, self-locking

type and shall be designed to hold the valve in any intermediate position between fully open and fully closed without creeping or fluttering. Valve operators shall be equipped with mechanical stop-limiting devices to prevent over-travel of the disc in the open and closed positions. Valves shall close with a clockwise rotation. Operators shall conform to the requirements of AWWA C504.

2. Valve bodies shall be constructed of cast iron ASTM A48, Class 40, or ASTM A126, Class B. Two trunnions for shaft bearings shall be integral with each valve body. Minimum body shell thicknesses shall be in strict accordance with AWWA Standard C504.
3. Valve disc shall be constructed of ductile iron ASTM A536, Grade 65-45-12, or cast iron ASTM A48, Class C.
4. Shafts of all valves shall be turned, ground, and polished. Valve shafts shall be constructed of 18-8 Type 316 stainless steel. Shaft diameters must meet minimum requirements established by AWWA Standard C504 for Class 150B.
5. Valve seats shall be Buna-N for water and EPDM for air service at conditions up to 250º F. Valves shall have seats that are bonded or mechanically retained to the valve body or valve disc.
6. Valves shall be fitted with sleeve-type bearings. Bearings shall be corrosion resistant and self-lubricating. Bearing load shall not exceed 20% of the compressive strength of the bearing or shaft material. Bearings shall be high temperature for air valves.
7. Packing shall be Chevron V-type adjustable for above ground service and non-adjustable wear compensating for submerged or buried service.
8. Valves will be provided with torque tube pedestal assemblies where indicated on the Plans. Assemblies shall consist of a torque tube extension or a pedestal. Torque tubes shall be designed for a maximum deflection of no more than 0.75 degrees when measured at the disc edge. The pedestal shall be made of high strength cast iron and shall support the full weight of the extension rod by use of corrosion resistant thrust bearings located in the pedestal. Torque tube shall be made of carbon steel. Design of a torque tube shall allow ±2-inches of free movement along the tube longitudinal axis. Pedestal or torque tube extension shall have a height of 3 feet above the operating floor. Torque tube or pedestal assemblies shall be factory assembled as integral units where applicable.
9. All above ground butterfly valves shall have handwheel/lever/t-handle geared operators or electric actuators as specified in the Equipment Schedule or as shown on the Drawings. All buried valves shall be equipped with valve box and extension stem per City of Chandler standard details and either a handwheel and pedestal, actuator and pedestal, or with operating nut, as specified in the Equipment Schedule or as shown on the Drawings. Valves specified with an operating nut shall be installed with a ground level valve position indicator.
10. All buried butterfly valves shall be side mounted with a buried service gear operator and extended nut as specified in this Section.

11. Certified Drawing and Material Specifications shall be furnished by the manufacturer through the CONTRACTOR covering all items included in Sections 1 and 2 of AWWA C504. Butterfly valves shall be as manufactured by Bray, DeZurik, Henry Pratt Company, Mueller, Val-Matic, or equal.

2.4 CHECK VALVES

A. CPVC and PVC Ball Check Valves (CKB):
   1. Ball check valves shall be self-contained, straight-through designed, automatic valves which prevent reversal of flow direction. Ball check valves shall ensure a positive seal to prevent reversal of flow, with extremely low back pressure.
   2. Ball shall be supported by a system of guide ribs to full flow with minimum turbulence and chatter.
   3. Valves shall be able to operate in horizontal and vertical position and shall be thermoplastic construction in PVC. Valves shall contain Viton O-ring seals. Valves shall be 150 psi at 75° F.
   4. Ball check valves shall be as manufactured by Watts Regulator or approved equal.

B. CPVC Spring Loaded Ball Check Valves (SCKB):
   1. Spring loaded ball check valves shall be self-contained, straight-through designed, automatic valves which prevent reversal of flow direction. Spring loaded ball check valves shall ensure a positive seal to prevent reversal of flow, with extremely low back pressure.
   2. Ball shall be supported by a system of guide ribs to full flow with minimum turbulence and chatter.
   3. Valves shall be able to operate in horizontal and vertical position and shall be thermoplastic construction in PVC. Valves shall contain Viton O-ring seals. Valves shall be 150 psi at 75° F.
   4. Product and Manufacturer (Manufacturers listed in alphabetical order):
      a. Heflin-Harrington,
      b. Ryan Herco.,
      c. Or approved equal.

C. Swing Check Valves (CKS):
   1. Swing check valves shall be of the spring-loaded, non-slamming type. Swing check valves for wastewater or sludge pumping shall be designed to operate in the horizontal position. Valves shall have manual spring-loaded operators outside the valve body for backflushing.
   2. All materials of construction shall be certified in writing to conform to ASTM Specifications as follows:
      a. Body, Cover: Cast iron, ASTM A126, Grade B.
      b. Disc, Disc Arm: Ductile iron, ASTM A536.
      c. Seat: Stainless steel, ASTM B148.
      d. Disc Seat: Buna-N.

e. Pivot Shaft: Stainless steel, Type 17-4 PH.

3. Product and Manufacturer (Manufacturers listed in alphabetical order):
   a. Series 6000 CLS, as manufactured by APCO,
   b. Or approved equal.

2.5 BALL VALVES

A. PVC Ball Valves:
   1. Ball valves shall be constructed of polyvinyl chloride conforming to ASTM F439 and ASTM D1784. Valves shall be true union with Viton seals and locked in Teflon seat carrier. Operation shall be 1/4 turn from full open to full closed with the hand lever parallel to flow in the full open position. Valves shall be rated at 200 psi at 70° F.
   2. PVC ball valves shall be as manufactured by Heflin-Harrington, Ryan Herco., or approved equal.

B. CPVC Ball Valves:
   1. Ball valves on CPVC piping shall be manufactured of chlorinated polyvinyl chloride (CPVC) material with seats and seals which are compatible with the process fluid.
   2. CPVC shall be Type 4, Grade 1, in accordance with the requirements of ASTM D 1784.
   3. Valves shall be true union type and rated for 150 psi service.
   4. CPVC ball valves shall be as manufactured by Nibco Incorporated, Hayward Manufacturing Company, ASAHI/America, Spears or approved equal.

2.6 AIR/VACUUM RELIEF VALVES

A. The air/vacuum valve allows large volumes of air to escape out the large orifice when filling a pipeline and closes when liquid enters the air and vacuum valve. During the large orifice closure, the small air release orifice will open to allow small pockets of air to escape automatically and independently of the large orifice through an attached air release valve.

B. The large orifice shall also allow large volumes of air to enter during pipeline drainage to break the vacuum. The body inlet must be dampened to protect the lower float from direct forces of rushing air and water and to prevent premature valve shut-off causing water hammer in the air and vacuum valve. The floats shall be heavy stainless steel, hermetically sealed, designed to withstand 1,000 psi. The top plug or float shall be center guided through hex bushings for positive shut-off.

C. The main valve parts shall be a body, cover, baffle, float, and seat. The baffle shall shield the float from direct impact of air and water to prevent premature float closure. The seat shall slip fit into the baffle or cover and lock in place without any distortion.

D. The entire float and baffle assembly must be shrouded with a water diffuser to prevent water from slamming the float shut. Outlets shall be threaded.

E. Materials of Construction shall be as follows:
   1. Air and Vacuum Valve Body, Cover: 316 SST.
   2. Float: Polypropylene.
   3. Seat: Buna-N.

F. Product and Manufacturer (Manufacturers listed in alphabetical order):
   1. ARI Model D-26 (with low pressure seal option) for RAS pumps,
   2. ARI Model D-025 L NS for WAS pumps,
   3. Or approved equal.

2.7 SOLENOID VALVES

A. 2-way solenoid valves:
   1. Manufacturers: One of the following or equal (manufacturers listed in alphabetical order)
      a. Automatic Switch Company, Series 8210.
      b. Skinner Electric Valve Division, Series C.

B. Design:
   1. Valves: Suitable for service under the following conditions:
      a. Fluid: Reclaimed water.
      b. Temperature of fluid: 80 degrees Fahrenheit.
      c. Piping test pressure: 100 pounds per square inch gauge.
   2. Unless otherwise indicated on the Drawings, provide valves that:
      a. Minimum NEMA Type 4 enclosure.
      b. 120 VAC operation.
      c. Suitable for use as indicated on the Drawings.
      d. Minimum Class F coil insulation.
      e. Normally closed
   3. 2-way valves: Furnish with openings of size equal to or larger than the nominal size designation of the valve.
   4. Furnish with manual/bypass operators.

C. Materials:
   1. Body: Type 316 Stainless Steel.
   2. Seats: Resilient material.

2.8 PRESSURE REDUCING VALVES

A. Manufacturers: One of the following or equal (manufacturers listed in alphabetical order)
   1. Watts Regulator, Series 223.
   2. Wilkins, 500 Series.

B. Direct operated, single seat type pressure reducing valve.

C. Materials:
   1. Body and spring cover: Bronze.
   2. Valve seat: Series 300 stainless steel.
   3. Diaphragm: Buna Nitrile.
   4. Disk: Buna Nitrile.

2.9 VALVE APPURTENANCES

A. Extension Stems, Stem Guides, Wrenches, and Keys:
   1. Provide intermediate stem guide for extensions more than 7 feet long.
   2. Stem brackets and guides shall be made of cast iron and have fully adjustable bronzed bushed guide block. Fasten brackets to walls with approved expansion bolts.
   3. Operating nuts about 2-inches square shall be included with each extension stem and located in floor box or grating recess, as required.
   4. Provide operating key or wrench of suitable length and size for each valve that is not readily accessible to direct operation.

B. Floor Boxes: Provide cast iron floor boxes for all valves which are to be operated from floor above valve. Boxes shall be equal in depth to floor slab. Boxes shall have cast iron covers and shall be fitted with bronze bushing.

C. Valve Boxes: Provide each buried valve with a valve box as follows:
   1. Made of heavy pattern cast iron construction with two-piece adjustable telescoping type.
   2. Lower section shall enclose operating nut and stuffing box and rest on bonnet.
   3. Inside diameter shall be at least 4-1/2-inches.
   4. Provide extension stem and operating nut.
   5. Cover shall be heavy-duty cast iron with direction to open arrow cast in.
   6. Provide ground level valve position indicator for all buried valves.

2.10 SHOP PAINTING

A. The manufacturer shall paint all PVC valves to be installed in exterior exposure as follows:
   1. Surface Preparation: Clean, dry, and free of contaminants.
   2. Prime Coat: Series 66 H.B Epoxoline; one coat, 3-5 mils DFT.
   3. CONTRACTOR shall determine the quantity of each type of valve to the manufacturer.
   4. CONTRACTOR shall provide finished coat per Section 09900, Painting. Final color selection shall be approved by ENGINEER prior to application.

PART 3 - EXECUTION

3.1 INSTALLATION

A. Workmanship shall be of the highest grade throughout and in accordance with the best standard practice for this type of equipment.

B. Valves of the various types and pattern shall be installed at the respective locations as shown on the Drawings, listed in the Equipment Schedule, and specified herein. All appurtenances required for operation and control of the valves shall be included. Joints and connections shall be made in accordance with applicable requirements for pipe line or pipe joints. Valve stems shall be plumb and vertical unless otherwise specifically shown. Each valve shall be adjusted for smooth and easy operation and shall be watertight when placed in operation under maximum working pressure.

3.2 MANUFACTURER'S FIELD SERVICE

A. Equipment Start-up: A factory trained representative of the manufacturer shall visit the site and provide installation and start-up services as specified in Section 01650, Starting of Systems. Sales representatives shall not be acceptable to perform start-up and training functions.

B. Training: A factory employed representative of the manufacturer shall visit the site and provide operator training services, in addition to equipment start-up services, as specified in Section 01650, Starting of Systems.

++ END OF SECTION ++

SECTION 11311

SUBMERSIBLE PUMPS

PART 1 - GENERAL

1.1 SUMMARY

A. CONTRACTOR shall furnish and install three new submersible non-clogging impeller pumps for the Raw Water Pump Station as specified herein and as shown on the Drawings. The pumps shall be complete and operational with motors, discharge elbow, guide bar, brackets, access frames, covers, alternator, and accessories as shown and specified. Anchor bolts are included in this Section.

1.2 RELATED SECTIONS

A. Section 01300, Submittals.

B. Section 01640, Materials and Equipment.

C. Section 01650, Starting of Systems.

D. Section 05500, Metal Fabrications.

E. Section 09900, Painting.

F. Section 11100, Motors.

G. Division 16, Electrical.

1.3 REFERENCES

A. Antifriction Bearing Manufacturers Association (AFBMA).

B. American National Standards Institute (ANSI).
   1. ASTM A48, gray iron castings.
   2. ASTM A276, stainless and heat resisting steel bars and shapes.

C. American Society for Testing and Materials (ASTM).

D. American National Standards Institute/Hydraulic Institute (ANSI/HI).
   1. 1.1-1.5, Centrifugal Pumps - Nomenclature, Definitions, Application and Operation.
   2. 1.6, Centrifugal Pump Tests.
   3. 9.1-9.5, Pumps - General Guidelines for Types, Definitions, Application and Sound Measurement.

E. National Electric Code (NEC).

F. Standards of National Electrical Manufacturers Association (NEMA).

G. Institute of Electrical and Electronic Engineers (IEEE).

H. Standards of American Water Works Association (AWWA).

1.4 GENERAL DESCRIPTION

A. Pumps shall be installed in the wet well as shown in the Drawings. Each pump shall be mounted on a discharge connection elbow and guide bar system to allow removal and installation of the pumps without entering the wet well.

B. The entire weight of the pump unit shall be guided by a minimum of two guide bars pressed tightly against the discharge connection elbow. No portion of the pump shall bear directly on the floor of the sump. The pump, with its appurtenances and guide bar system, shall be capable of continuous submergence under water without loss of water tight integrity to a depth of 60 feet.

C. Provide a permanently installed cast iron discharge connection elbow and base in the wet well, along with the discharge piping. The pump shall be automatically connected to the discharge connection elbow when lowered into place and shall be easily removed for inspection or service. Sealing of the pumping unit to the discharge connection elbow shall be accomplished by a simple linear downward motion of the pump.

D. Provide enlargers/reducers as necessary to ensure pump locations, pipe location, and pipe sizes are as shown on the Drawings. If enlargers/reducers affect pump locations, pipe locations, or pipe sizes, the CONTRACTOR shall notify the ENGINEER before construction of the pump station proceeds.

E. In order to centralize responsibility, it is required that all equipment and services provided under this Specification be furnished by a single supplier or manufacturer who shall assume full responsibility for the completeness of the system. CONTRACTOR shall guarantee and be the source of information on all equipment furnished regardless of the manufacturing source of that equipment.

1.5 SUBMITTALS

A. Descriptive submittals shall be made in accordance with the Data Reference Symbols defined in Section 01300, Submittals.
   1. Pumps: Shop Drawings:
      a. Letters of Certification of Compliance on materials, equipment, etc.
      b. Final Certified Drawings showing outline dimensions, foundation layout or mounting information, and other pertinent dimensions.

c. Field erection instructions, assembly drawings and/or diagrams, detailed reference drawing lists, lists of erection details, and list of spare parts supplied with equipment.
d. Shop Detail Drawings showing individual sub-assemblies and fabricated pieces with material specifications and other applicable data.
e. Installation instructions, operating and/or service manuals, and all other data pertinent to operating or servicing the complete apparatus. Preventative maintenance instructions and recommended frequency.
f. Schematic and wiring diagrams of power, control, and piping systems. A detailed description of operation shall be included for each diagram to describe all modes of operation of the system indicated. Where the integrated system requires interlocking and control of other components in normal operation, these components shall be included in the description of operation.
g. General bulletins and catalog cuts describing complete apparatus, including operating principles and fundamentals.
h. Service data sheets showing design performance, utility requirements, etc., as applicable to the specific duty for which the equipment is furnished.
i. Certified head and capacity curves for pumps. Impeller size furnished and maximum size available shall be noted on these data sheets.
j. Curves and/or data for overall range of operation from minimum to maximum capacity or load, showing capacity or load, utilities motive medium required, total or incremental differential head, and other pertinent information applicable to the equipment or its component assemblies.
k. Materials of construction of all components.
l. Renewal parts list with diagrammatic or cross-section drawings showing part identification. Material analysis or trades designation for each significant part is to be noted on parts lists or on a separate sheet.
m. Stuffing box sizes; packing sizes; specifications and arrangement; and mechanical seal details, specifications, etc., if furnished in equipment.
n. Bearing manufacturer's standard identification and/or interchangeable number for all anti-friction bearings in the equipment proper and its accessory items.

2. Pumps: O&M Manuals:
   a. Final Certified Drawings showing outline dimensions, foundation layout or mounting information, and other pertinent dimensions.
   b. Field erection instructions, assembly drawings and/or diagrams, detailed reference drawing lists, lists of erection details, and list of spare parts supplied with equipment.
   c. Shop Detail Drawings showing individual sub-assemblies and fabricated pieces with material specifications and other applicable data.
   d. Installation instructions, operating and/or service manuals, and all other data pertinent to operating or servicing the complete apparatus. Preventative maintenance instructions and recommended frequency.

e. Schematic and wiring diagrams of power, control, and piping systems. A detailed description of operation shall be included for each diagram to describe all modes of operation of the system indicated. Where the integrated system requires interlocking and control of other components in normal operation, these components shall be included in the description of operation.
f. General bulletins and catalog cuts describing complete apparatus, including operating principles and fundamentals.
g. Service data sheets showing design performance, utility requirements, etc., as applicable to the specific duty for which the equipment is furnished.
h. Certified head and capacity curves for pumps. Impeller size furnished and maximum size available shall be noted on these data sheets.
i. Curves and/or data for overall range of operation from minimum to maximum capacity or load, showing capacity or load, utilities motive medium required, total or incremental differential head, and other pertinent information applicable to the equipment or its component assemblies.
j. Materials of construction of all components.
k. Renewal parts list with diagrammatic or cross-section drawings showing part identification. Material analysis or trades designation for each significant part is to be noted on parts lists or on a separate sheet.
l. Stuffing box sizes; packing sizes; specifications and arrangement; and mechanical seal details, specifications, etc., if furnished in equipment.
m. Bearing manufacturer's standard identification and/or interchangeable number for all anti-friction bearings in the equipment proper and its accessory items.
n. Descriptive O&M's shall be made in accordance with Section 01730, Operation and Maintenance Data.

3. Impellers: Shop Drawings:
a. Letters of Certification of Compliance on materials, equipment, etc.
b. Final Certified Drawings showing outline dimensions, foundation layout or mounting information, and other pertinent dimensions.
c. Field erection instructions, assembly drawings and/or diagrams, detailed reference drawing lists, lists of erection details, and list of spare parts supplied with equipment.
d. Shop Detail Drawings showing individual sub- assemblies and fabricated pieces with material specifications and other applicable data.
e. Installation instructions, operating and/or service manuals, and all other data pertinent to operating or servicing the complete apparatus. Preventative maintenance instructions and recommended frequency.
f. Service data sheets showing design performance, utility requirements, etc., as applicable to the specific duty for which the equipment is furnished.
g. Certified head and capacity curves for pumps. Impeller size furnished and maximum size available shall be noted on these data sheets.

h. Curves and/or data for overall range of operation from minimum to maximum capacity or load, showing capacity or load, utilities motive medium required, total or incremental differential head, and other pertinent information applicable to the equipment or its component assemblies.
i. Materials of construction of all components.
j. Bearing manufacturer's standard identification and/or interchangeable number for all anti-friction bearings in the equipment proper and its accessory items.

4. Impellers: O&M Manuals:
   a. Final Certified Drawings showing outline dimensions, foundation layout or mounting information, and other pertinent dimensions.
   b. Field erection instructions, assembly drawings and/or diagrams, detailed reference drawing lists, lists of erection details, and list of spare parts supplied with equipment.
   c. Shop Detail Drawings showing individual sub- assemblies and fabricated pieces with material specifications and other applicable data.
   d. Installation instructions, operating and/or service manuals, and all other data pertinent to operating or servicing the complete apparatus. Preventative maintenance instructions and recommended frequency.
   e. Service data sheets showing design performance, utility requirements, etc., as applicable to the specific duty for which the equipment is furnished.
   f. Certified head and capacity curves for pumps. Impeller size furnished and maximum size available shall be noted on these data sheets.
   g. Curves and/or data for overall range of operation from minimum to maximum capacity or load, showing capacity or load, utilities motive medium required, total or incremental differential head, and other pertinent information applicable to the equipment or its component assemblies.
   h. Materials of construction of all components.
   i. Bearing manufacturer's standard identification and/or interchangeable number for all anti-friction bearings in the equipment proper and its accessory items.

5. A copy of this specification section, with addendum updates included, and all referenced and applicable sections, with addendum updates included, with each paragraph check-marked to indicate specification compliance or marked to indicate requested deviations from specification requirements. Check marks (✓) shall denote full compliance with a paragraph as a whole. If deviations from the specifications are indicated, and therefore requested by the CONTRACTOR, each deviation shall be underlined and denoted by a number in the margin to the right of the identified paragraph, referenced to a detailed written explanation of the reasons for requesting the deviation. The ENGINEER shall be the final authority for determining acceptability of requested deviations. The CONTRACTOR shall furnish equipment and/or services as specified if an exception and/or deviation is rejected. The remaining portions of the paragraph not underlined will signify compliance on the part of the CONTRACTOR with

the specifications. Failure to include a copy of the marked-up specification sections, along with justification(s) for any requested deviations to the specification requirements, with the submittal shall be sufficient cause for rejection of the entire submittal with no further consideration.

6. The CONTRACTOR shall submit the preventive maintenance information package as part of the shop drawing submittal package to the ENGINEER for review and approval. **SHOP DRAWING SUBMITTAL PACKAGE WILL NOT BE APPROVED WITHOUT ACCEPTANCE OF PREVENTIVE MAINTENANCE INFORMATION.**

1.6 WARRANTY

A. The pump manufacturer shall warrant the units being supplied to the OWNER against defecting in workmanship and material for a period of five years or 10,000 hours under normal use, operation, and service. The warranty shall cover parts and labor and shall be in printed form and apply to all similar units.

1.7 QUALITY ASSURANCE

A. Manufacturers regularly engaged in the manufacture of the submersible pump equipment as specified herein and who can demonstrate equipment of this specified design in actual service for not less than five years will be considered as acceptable manufacturers. All like items shall be furnished by one manufacturer to ensure uniformity and interchange ability of parts. Manufacturer shall guarantee all equipment furnished; however, this shall not be construed as relieving the CONTRACTOR from his responsibility for the proper installation and functioning of the Work.

B. Require pump manufacturer to furnish and coordinate pump, driver, drive, and pump components as specified and scheduled below and to provide written installation and check-out requirements.

C. Manufacturer shall have five installations of same size equipment in same application within the last five years in the State of Arizona. Manufacturer to submit installation information, including size, location, and a total of three operator contact names and operator phone numbers with the submittals.

D. Complete assemblies, including motor, cable, and all accessories, shall be listed and approved by the Nationally Recognized Testing Laboratories (NRTL).

E. Shop Tests:
   1. Pump casings shall be hydrostatically tested to twice the discharge head or 1-1/2 times the shutoff head, whichever is greater.
   2. Running Test: Pump assembly shall be operated from zero to maximum capacity as shown on the approved pump curve. Results of the test shall be shown in a plot of test curves showing head, flow, horsepower, efficiency, and

current. Readings shall be taken at a minimum of five evenly spaced capacity points including shut-off, design point and minimum head for which the pump is designed to operate.

3. Each test shall be witnessed by a Registered Professional Engineer, who may be an employee of the manufacturer. He shall sign and seal all copies of curves and shall certify that hydrostatic tests were performed. Tests shall be conducted in conformance with the methods described in Section A6 of AWWA E101.
4. Pumps shall not be shipped until the ENGINEER has approved the test reports.

PART 2 - PRODUCTS

2.1 MANUFACTURERS

A. ITT FLYGT.

B. KSB.

C. Sulzer.

D. Or, approved equal.

E. The naming of a manufacturer in this Specification is not an indication that the manufacturer's standard equipment is acceptable in lieu of the specified component features. Naming is only an indication that the manufacturer may have the capability of engineering and supplying a system as specified.

2.2 DESIGN CRITERIA

A. Equipment Schedule:

(The rest of this page intentionally left blank.)

<table>
<tr><th>DESCRIPTION</th><th>NUMBER OF PUMPS
VARIABLE FREQUENCY DRIVE</th><th>OPERATING CONDITIONS</th></tr>
<tr><td>Raw Water Pump Station</td><td>3</td><td>See system head curve for design rated points. The pumps specified shall be capable of pumping the required flow along the entire system head curve. One pump in operation shall operate at full speed at 4,000 gpm at a TDH 50 feet. Two pumps in parallel operation shall operate at full speed at 7,000 gpm at a TDH of 47 feet. In addition to the above, one pump in operation shall be capable of pumping 3,000 gpm to 4,000 gpm between a speed of 45 Hz and 60 Hz, respectively. Two pumps in parallel operation shall be capable of pumping 5,600 gpm to 7,000 gpm between 45 Hz and 60 Hz, respectively.
The pump shall operate at the following Rated Design Point:
<table>
<tr><td>Flow (gpm)</td><td>Total Dynamic Head (feet)</td></tr>
<tr><td>3473</td><td>47</td></tr>
</table>
The pump shall operate along a pump curve at the specified:
<table>
<tr><td>Flow (gpm)</td><td>Head (feet)</td></tr>
<tr><td>2,500</td><td>66</td></tr>
<tr><td>3,250</td><td>63</td></tr>
<tr><td>4,000</td><td>60</td></tr>
</table>
Minimum Overall Pump Efficiency At Rated Design Point 80%
Motor Efficiency – 91%
Pump Efficiency at Rated Design Point – 83%
Minimum Shutoff Head - 79ft
Maximum Motor HP - 60
Maximum Speed – 1,200 rpm
Voltage, Volts - 460
Power Phases - 3
Power Frequency, Hz - 60
Minimum Solids Size - 3-inches
Minimum Power Cable Length - 100 feet
Minimum Pump Discharge Size – 8-inches</td></tr>
</table>

2.3 SUBMERSIBLE PUMP COMPONENTS

A. Pumps:
   1. The pumps shall be heavy-duty, electrical, submersible, centrifugal Non-clogging impeller units designed for handling influent wastewater flow.
   2. Major pump components shall be cast iron, ASTM A48, Class 35B, with smooth surfaces devoid of blow holes and other irregularities. All exposed nuts and bolts shall be of AISI Type 316 stainless steel. All surfaces coming into contact with water, other than stainless steel, shall be protected by an approved high quality epoxy coating.
   3. All mating surfaces where watertight sealing is required shall be machined and fitted with nitrile or viton rubber O-rings. Fittings shall be such that sealing is accomplished by metal-to-metal contact between machined surfaces. This will result in controlled compression of rubber O-rings without the requirement of a specific torque limit.
   4. Rectangular cross sectioned gaskets requiring specific torque limits to achieve compression shall not be considered as adequate or equal.

B. Motor:
   1. The pump motor shall be squirrel cage, induction, shell-type design, housed in an air-filled, watertight chamber. The stator windings shall be insulated with moisture resistant Class H insulation rated for 180° C. The stator shall be insulated by the trickle impregnation method using Class H monomer-free polyester resin resulting in a winding fill factor of 95%. The stator shall be heat-shrink fitted into the cast iron stator housing. The use of multiple step dip and bake-type stator insulation process is not acceptable. The motor shall be designed for continuous duty handling pumped media of 40° C capable of sustaining a minimum of 15 starts per hour with a minimum service factor of 1.15. See Section 11100, Motors for Motor Specifications.
   2. Thermal sensors shall be used to monitor stator temperatures. The stator shall be equipped with a minimum of three thermal switches embedded in the end coils of the stator winding (one switch in each stator phase). These shall be used in conjunction with and supplemental to external motor overload protection and wired to the control panel.
   3. Provide a leakage and over temperature protection system which shall consist of leakage and over temperature sensors at the motor and control module which shall be remotely located.
   4. Control module shall be compatible with motor sensors.
   5. Submersible pumps shall have explosion proof motors.

C. Cable Entry:
   1. The cable entry water seal design shall preclude specific torque requirements to insure a watertight submersible seal. The cable entry shall be comprised of a single cylindrical elastomer grommet, flanked by stainless steel washers, all

having a close tolerance fit against the cable outside diameter and the entry inside diameter. The cable entry junction chamber and motor shall be separated by a stator lead sealing gland or terminal board, which shall isolate the motor interior from foreign material gaining access through the pump top. Epoxies, silicones, or other secondary sealing systems shall not be considered acceptable.

D. Junction Chamber:
   1. The junction chamber, containing the terminal board, shall be sealed from the motor by elastomer compression seal (O-ring) and be field replaceable. Connection between the cable conductors and stator leads shall be made with threaded compressed type binding post permanently affixed to a terminal board and, thus, perfectly leak proof.

E. Shaft and Seals:
   1. Pump and motor shaft shall be the same unit. The pump shaft is an extension of the motor shaft. Couplings shall be acceptable. The pump shaft shall be completely isolated from the pumped liquid. The pump shafts for the pumps shall be of carbon steel ASTM A572, Grade 50, or Type 420 stainless steel.
   2. Each pump shall be provided with a tandem mechanical shaft seal system consisting of two totally independent seal assemblies. The seals shall operate in a lubricant reservoir that hydrodynamically lubricates the lapped seal faces at a constant rate. The lower, primary seal unit, located between the pump and the lubricant chamber, shall contain one stationary and one positively driven rotating Tungsten Carbide ring. The upper, secondary seal unit, located between the lubricant chamber and the motor housing, shall contain one stationary Tungsten Carbide seal ring and one positively driven rotating Tungsten Carbide seal ring.
   3. Each interface shall be held in contact by its own spring system. The seals shall require neither maintenance nor adjustment, but shall be easily inspected and replaceable. The following seal types shall not be considered acceptable (not equal to the dual independent seal specified): shaft seals without positively driven rotating members, or conventional double mechanical seals containing either a common single or double spring acting between the upper and lower units. Cartridge seals shall not be acceptable.
   4. Each pump shall be provided with an oil chamber for the shaft sealing system. The seal oil shall be FDA approved and non-toxic. Seal lubrication shall require an oil chamber capacity no greater than 16 pints. The drain and inspection plug, with positive anti-leak seal, shall be easily accessible from the outside.

F. Bearings:
   1. The pump shaft shall rotate on two-permanently lubricated bearings. Motor bearings shall be permanently greased lubricated. The upper bearing shall be a single roller bearing. The lower bearing shall be a two row angular contact bearing to compensate for axial thrust and radial forces. The bearings shall be rated for a 100,000 hours B-10 life.

G. Impellers:
   1. Impellers shall be of gray cast iron, ASTM A48, Class 35B, dynamically balanced, double shrouded, non-clogging impeller having a long thrulet without acute turns. The impeller shall be capable of untreated surface water and fibrous materials. The fit between the impeller and the shaft shall be a sliding fit with one key.
   2. The volute shall be of a single piece, non-concentric design and shall have smooth fluid passages large enough at all points and capable of passing the diameter solids listed in the pump performance tables.

H. Wearing Rings:
   1. A wear ring system shall be installed to provide efficient sealing between the volute and impeller. The wear ring system shall consist of a stationary ring made of Type 420 stainless steel with a minimum Brinell Hardness number of 450 when tested in accordance with ASTM E10, encased in Nitrile rubber. The wear ring system shall be fitted to the volute inlet. Pumps shall also have a stainless steel impeller wear ring heat-shrink fitted onto the suction inlet of the impeller.

I. Guide System:
   1. Pumps shall use a guide bar system; guide cables are not acceptable. Guide bars, lifting cable, and guide rail supports shall be supplied by the pump manufacturer and be Type 316 stainless steel. The guide rail supports shall be placed at 8 foot maximum intervals, less as required to provide support. The system shall allow the pump to be automatically connected to the discharge connection when lowered into place and shall be easily removed for inspection or service. Sealing of the pumping unit to the discharge connection shall be accomplished by a linear downward motion of the pump to a metal-to-metal interface or to a profile gasket seal.
   2. The guide system shall include a pump lifting device. The pump lifting device shall slide along the guiderails without need for a downward force. The lifting device shall have a lifting eye which will accommodate a typical monorail or davit crane hook. The lifting device shall engage the pump lifting eye automatically upon contact. The lifting device shall accommodate pumps weighing up to 10,000 lbs. The lifting device will not increase pump height by more than 24 inches.

J. Submersible Cable:
   1. Provide power and control cable from junction box to each pump suitable for submersible applications and indicate same by a code or legend permanently embossed on the cable.
   2. The instrument and power cables shall be submersible to the same water depth as the motor casing, type SPC with Chloroprene jacket, insulated for 90° C, non-wicking fillers, and at a length to suit surface junction box as indicated on the Drawings.

3. Size cable in accordance with applicable NEC requirements.
4. Cable shall be listed by a recognizable testing agency or laboratory.
5. Cable shall be covered in a protective PVC cover. PVC cable cover shall be ozone resistant. CONTRACTOR shall coordinate cable cover with the Odor

K. Controls:
1. Provide for control of the system in accordance with Section 17454, Control Descriptions. The CONTRACTOR shall be responsible for control panels as shown on the Drawings.

2.4 SPARE PARTS

A. Deliver one set for every furnished pump type and size needed to assemble and disassemble pump system.

B. Total spare parts to be supplied include the following:
1. One set of wear rings.
2. One set of gaskets.
3. One set of bearings.
4. One set of mechanical seals.

2.5 PUMP SHOP PAINTING

A. The manufacturer shall paint the pumps as follows:
1. CONTRACTOR shall provide finished coat per Section 09900, Painting. Final color selection shall be approved by ENGINEER prior to application.
2. Pumps, motors, drives, frames, baseplates, appurtenances, etc., shall receive shop primer and shop finish coating conforming to the requirements of Section 09900, Painting. If any damage to the paint system occurs, the equipment shall be repainted as directed by the ENGINEER.
3. Surface preparation and painting shall conform to the requirements of Section 09900, Painting.
4. All gears, bearing surfaces, machined surfaces and other surfaces which are to remain unpainted shall receive a heavy application of grease or other rust-resistant coating. This coating shall be maintained during storage and until the equipment is placed into operation.
5. Certify, in writing, that the shop primer and shop finish coating system conforms to the requirements of Section 09900, Painting.

PART 3 - EXECUTION

3.1 INSTALLATION

A. The pumps and accessories shall be installed in accordance with the manufacturer's recommendations.

B. Make adjustments required to place system in proper operating condition. Field test and calibrate the equipment to assure that the system operates in accordance with these Specifications and to the satisfaction of the ENGINEER.

C. After completion of installation, the system shall be completely tested to ensure compliance with the operating requirements as specified, indicated on the Drawings and in accordance with Section 01752, Equipment and System Startup and Performance Testing.

3.2 MANUFACTURERS' FIELD SERVICE

A. Equipment Start-up: A factory employed representative of the manufacturer shall visit the site and provide installation and start-up services as specified in Section 01650, Starting of Systems.

B. A factory-trained representative shall be provided for installation supervision, start-up and test services and operation and maintenance personnel training services. The representative shall make a minimum of 3 visits, minimum 8hours on-site for each visit, to the site. The first visit shall be for assistance in the installation of equipment. The second visit shall be for checking the completed installation and start-up of the system. The third visit shall be as described under Section 01821, Instruction of Operations and Maintenance Personnel. Manufacturer's representative shall test operate the system in the presence of the ENGINEER and verify that the pumps conform to requirements. Representative shall revisit the job site as often as necessary until all trouble is corrected and the installation is entirely satisfactory.

C. Training: A factory employed representative of the manufacturer shall visit the site and provide operator training services, in addition to equipment start-up services, as specified in Section 01650, Starting of Systems.

++ END OF SECTION ++

SECTION 11320

SELF-CLEANING STRAINERS

PART 1 - GENERAL

1.1 SUMMARY

A. CONTRACTOR shall provide all labor, materials, equipment, and incidentals as shown, specified, and required to furnish and install three in-line, automatic, self-cleaning strainers. The self-cleaning strainers shall remove solids from the process water prior to membrane filtration.

B. The CONTRACTOR shall have the responsibility to coordinate the installation of the equipment. Any revisions necessary shall be subject to the ENGINEER'S review and approval.

1.2 REFERENCES

A. The following is a list of standards which may be referenced in this Section:
   1. American Institute of Steel Construction (AICS).
   2. American Iron and Steel Institute (AISI).
   3. American National Standard Institute (ANSI).
   4. American Society of Civil Engineers (ASCE).
   5. American Society of Mechanical Engineers (ASME).
   6. American Society of Testing Materials (ASTM).
   7. American Welding Society (AWS).
   8. International Building Code (IBC).
   9. International Electric Code (IEC).
   10. Institute of Electrical and Electronics Engineers (IEEE).
   11. National Electric Code (NEC).
   12. National Electric Manufacturer's Association (NEMA).
   13. Underwriters Laboratory (UL and cUL).

1.3 RELATED SECTIONS

A. Section 01300, Submittals.

B. Section 01640, Materials and Equipment.

C. Section 01650, Starting of Systems.

D. Section 11295, Hydraulic Valves

E. Division 16, Electrical.

F. Division 17, Instrumentation.

1.4 QUALITY ASSURANCE

A. Manufacturer's Qualifications:
   1. Manufacturer shall have a minimum of five years of experience in the production of substantially similar equipment and shall show evidence of satisfactory operation in at least five installations.
   2. All self-cleaning strainers shall be the product of one manufacturer.

B. Shop Tests:
   1. Strainer Tests:
      a. Hydrostatic test to 1-1/2 times the working pressure.
      b. Test for pressure drop at maximum flow with clean media.
      c. Each test shall be witnessed by a Registered Professional Engineer who may be an employee of the manufacturer. The Professional Engineer shall seal and sign all test reports. Engineer's State of registration, registration number and name on the seal shall be legible.
   2. Motor Tests:
      a. Perform a routine test on each motor at the manufacturer's factory. The test shall consist of: Running Light Current; Locked Rotor Current; Winding Resistance; High Potential; and Bearing Inspection.

C. Unit Responsibility: Assign Unit Responsibility as specified in Section 01600, General Equipment Provisions, to the manufacturer or supplier for the equipment specified in this Section. A Certificate of Unit Responsibility shall be provided.

1.5 SUBMITTALS

A. Descriptive Submittals shall be made in accordance with the Data Reference Symbols defined in Section 01300, Submittals.
   1. Strainer Shop Drawings:
      a. Letters of Certification of Compliance on materials, equipment, etc.
      b. Final Certified Drawings showing outline dimensions, foundation layout or mounting information, and other pertinent dimensions.
      c. Shop Detail Drawings showing individual sub-assemblies and fabricated pieces with material specifications and other applicable data.
      d. Schematic and wiring diagrams of power, control, and piping systems. A detailed description of operation shall be included for each diagram to describe all modes of operation of the system indicated. Where the integrated system requires interlocking and control of other components in normal operation, these components shall be included in the description of operation.
      e. General bulletins and catalog cuts describing complete apparatus, including operating principles and fundamentals.

f. Materials of construction of all components.
g. Renewal parts list with diagrammatic or cross-section drawings showing part identification. Material analysis or trades designation for each significant part is to be noted on parts lists or on a separate sheet.
h. Stuffing box sizes; packing sizes; specifications and arrangement; and mechanical seal details, specifications, etc., if furnished in equipment.
i. Deviations from the Contract Documents.

2. Strainer O&M Manuals:
   a. Final Certified Drawings showing outline dimensions, foundation layout or mounting information, and other pertinent dimensions.
   b. Shop Detail Drawings showing individual sub- assemblies and fabricated pieces with material specifications and other applicable data.
   c. Installation instructions, operating and/or service manuals, and all other data pertinent to operating or servicing the complete apparatus. Preventative maintenance instructions and recommended frequency.
   d. General bulletins and catalog cuts describing complete apparatus, including operating principles and fundamentals.
   e. Materials of construction of all components.
   f. Renewal parts list with diagrammatic or cross-section drawings showing part identification. Material analysis or trades designation for each significant part is to be noted on parts lists or on a separate sheet.
   g. Stuffing box sizes; packing sizes; specifications and arrangement; and mechanical seal details, specifications, etc., if furnished in equipment.
   h. Test reports, maintenance data and schedules, description of operation, and spare parts information.
   i. Furnish Operation and Maintenance Manuals in conformance with the requirements of Section 01300, Submittals.

B. Field Test Results:
   1. Submit a written report giving the results of the field tests required.

C. Lubricant Specification: Furnish a lubricant specification for the type and grade necessary to meet the requirements of the equipment.

D. A copy of this specification section, with addendum updates included, and all referenced and applicable sections, with addendum updates included, with each paragraph check-marked to indicate specification compliance or marked to indicate requested deviations from specification requirements. Check marks (✓) shall denote full compliance with a paragraph as a whole. If deviations from the specifications are indicated, and therefore requested by the CONTRACTOR, each deviation shall be underlined and denoted by a number in the margin to the right of the identified paragraph, referenced to a detailed written explanation of the reasons for requesting the deviation. The ENGINEER shall be the final authority for determining acceptability of requested deviations. The CONTRACTOR shall furnish equipment and/or services as specified if an exception and/or deviation is rejected. The

remaining portions of the paragraph not underlined will signify compliance on the part of the CONTRACTOR with the specifications. Failure to include a copy of the marked-up specification sections, along with justification(s) for any requested deviations to the specification requirements, with the submittal shall be sufficient cause for rejection of the entire submittal with no further consideration.

E. The CONTRACTOR shall submit the preventive maintenance information package as part of the shop drawing submittal package to the ENGINEER for review and approval. **SHOP DRAWING SUBMITTAL PACKAGE WILL NOT BE APPROVED WITHOUT ACCEPTANCE OF PREVENTIVE MAINTENANCE INFORMATION.**

1.6 PRODUCT DELIVERY, STORAGE, AND HANDLING

A. Factory assemble and test self-cleaning strainer system at point of manufacturer.

B. Manufacturer shall fabricate and deliver materials to the job site in conformance with the CONTRACTOR'S construction schedule to minimize handling and on-site storage of equipment.

C. Store materials to permit easy access for inspection and identification.

D. Store all mechanical equipment in covered storage off the ground and prevent condensation.

PART 2 - PRODUCTS

2.1 MANUFACTURERS

A. The strainers shall be as manufactured by one of the following (Manufacturers listed in alphabetical order):
   1. Amiad Water Systems
   2. R.P. Adams
   3. S.P. Kinney
   4. Or, Approved Equal.
   5. The naming of a manufacturer in this Specification is not an indication that the manufacturer's standard equipment is acceptable in lieu of the specified component features. Naming is only an indication that the manufacturer may have the capability of engineering and supplying a system as specified.

2.2 DESIGN CRITERIA

A. Self-Cleaning Strainer
   1. Number of Self-Cleaning Strainers: 3 (2 duty, 1 standby)
   2. Flow Rate, per Strainer: 5 MGD

3. Working Pressure, Minimum: 18 psi
4. Design Pressure, Maximum: 150 psi
5. Desired Solid Removal: 500 microns
6. Inlet/Outlet Diameter: 16 inches

B. Self-Cleaning Strainer Motor: As specified in Section 16225, Electric Motors 250 Horsepower or Less, except as otherwise specified or supplemented below:
1. Motor Power Supply: 480 volts, 3 phase, 60 hertz.
2. Motor Horsepower, Minimum: 0.5.
3. Motor Speed, Maximum: 1,800 rpm.
4. Motor Enclosure: TEFC.
5. Motor Service Factor: 1.15 at altitude.

2.3 MATERIALS

A. Strainer Unit
1. Body and drum assembly shall be carbon steel or cast iron.
2. Strainer unit shall be an automatic, self-cleaning type.
3. Openings in the straining element shall be 500 micrometers.
4. Straining element shall be perforated or punched hole stainless steel. Wedge wire shall not be accepted.
5. Strainer element shall be 316L stainless steel.
6. Inlet and outlet flange connections shall be 16 inches in diameter with drilling to conform to 150 lb ANSI.
7. Strainer unit shall have a maximum operating pressure of 150 psi and a minimum design water temperature of 20°C.

B. Backwash Mechanism
1. Strainer unit shall be equipped with a backwash mechanism that facilitates backwashing of the strainer element surface while maintaining forward flow through the strainer unit.
2. Backwash system of the strainer unit shall include an actuated hydraulic valve in order to control the backwash waste discharge containing the suspended solids removed from the straining element during backwash.
3. Backwashing when minimum system pressure is met: Strainer shall operate under a positive pipeline pressure on the discharge side or downstream from the pump. Pipeline pressure and water shall efficiently backwash strainer media. A valve on the backwash discharge pipe shall control pressure drop and amount of water wasted in backflushing.
4. Backwashing when minimum system pressure is not met: Strainer shall operate under suction condition on the intake or upstream side of the pump. Backwash water from backwash assist pump discharge shall be piped and valved to the drainer. Backwash water discharge pipe shall also be valved to maintain the required pressure drop and flow across the filter media.

C. Backwash Assist Pump
   1. Motors:
      a. Motors shall conform to the requirements of Section 16225, Electric Motors 250 Horsepower or Less.
      b. Motors shall be a totally enclosed fan cooled motor with Class H insulation, with a maximum speed of 3,450 rpm.
      c. Motors shall be suitable for operation on 480 volt, 3 phase, 60 Hz power.
      d. Motors shall be of adequate size so that there is no overload on the motor above rated manufacturer's nameplate horsepower under normal conditions of service, but not more than 15 horsepower.
      e. Motors shall have a 1.15 service factor, and shall comply with the latest ANSI, NEMA, and IEEE Standards as a minimum.
      f. Locked rotor current shall be as specified in NEMA standards.
      g. Motors thrust bearings shall be adequate to carry continuous thrust loads under all conditions of service, and shall have a minimum B-10 life of 100,000 hours.
      h. Motors shall have a stainless steel manufacturer's nameplate which shall provide the following: type, frame, insulation, class, HP, full load current, RPM, centigrade degree rise, manufacturer's name and serial number model, voltage, locked rotor KVA code, bearing numbers and a connection diagram.
      i. Motor terminal boxes shall be oversized to provide adequate space for connections and shall be constructed of cast iron or fabricated steel, neoprene gasketed and bolted. The motor leads shall be permanently marked in agreement with the connection diagram.

D. Inspection Port
   1. An inspection port shall be provided in the side of the strainer unit to permit visual inspection and maintenance of the strainer element and to allow for removal of any oversize solids which may have entered into the strainer unit.
   2. The cover plate of the inspection port shall be easily removable.

E. Anchor Bolts
   1. Anchor bolts shall conform to the requirements of Section 05051, Anchor Bolts, Toggle Bolts and Concrete Inserts.

F. Strainer Motor
   1. Motor shall be TEFC premium efficiency, Class H insulation.
   2. See Section 16225, Electric Motors 250 Horsepower or Less, for motor specifications.

G. Instrumentation
   1. Provide the following field instrumentation components in accordance with the requirements of Division 17.
      a. Differential Pressure Switch

1) A differential pressure switch shall be factory connected to the filter inlet and outlet piping to initiate the backwash cycle whenever a differential pressure across the filter exceeds a preset value.

b. Timers (integrated into the PLC)
   1) Backwash initiation timer
   2) Backwash duration timer

c. Pressure Gauges

H. Control System
   1. Provide control panels, instruments, and instrumentation and control components in accordance with Division 16 and 17.
   2. Control system shall be provided for the functionality described in Specification Section 17454.

I. Identification
   1. Identify each self-cleaning strainer with a stainless steel manufacturer's nameplate stamped with the approved designation as shown in Section 1800, Equipment Schedule.

J. Spare Parts
   1. Procedures: See Section 01750, Spare Parts and Maintenance Materials.
   2. Provide a "standard" spare parts list, including prices for all replaceable parts associated with the self-cleaning strainers, including the following at a minimum:
      a. One spare set of expendable material such as gaskets, seals, and packing.
      b. Two sets of new and unused special tools required for installation, operation, and maintenance.
      c. One strainer screen repair kit for each self-cleaning strainer
      d. Reagents/chemicals, calibration sets, and spare parts as specified for individual equipment items or instruments.
      e. Spare parts for instruments, PLC hardware and control devices as specified in Divisions 16 and 17.
   3. Provide recommendations for spare parts and materials for the first 12 months of facility specific system operation.

2.4 SHOP PRIMING AND FINISHING

A. Prepare and shop paint surfaces as specified in Sections 09900, Painting.

PART 3 - EXECUTION

3.1 INSTALLATION

A. Install self-cleaning strainers in accordance with the manufacturer's recommended methods.

3.2 FIELD TESTS

A. After CONTRACTOR and ENGINEER have mutually agreed that the equipment installation is complete and ready for continuous operation, CONTRACTOR and a qualified field service representative of the manufacturer shall conduct a functional field test and a leakage test of each strainer in the presence of ENGINEER to demonstrate that each strainer furnished will function correctly and that maximum permissible leakage is not exceeded.
   1. Functional Tests:
      a. Each strainer with appurtenances shall be field tested. Tests shall demonstrate to ENGINEER that each part and all parts together function in the manner intended. All necessary testing equipment and manpower shall be provided by CONTRACTOR at his expense. OWNER will furnish all power, and incidental material and labor required for the tests.
   2. In the event that the manufacturer is unable to demonstrate to ENGINEER that his equipment meets the requirements of the tests, the deficient equipment will be rejected and CONTRACTOR shall adjust and/or modify and retest the equipment as often as necessary to meet the specified requirements. No separate payments shall be made for adjustments and/or modifications.

3.3 MANUFACTURER'S FIELD SERVICE

A. Equipment Start-up: A factory employed representative of the manufacturer shall visit the site and provide installation and start-up services as specified in Section 01650, Starting of Systems.

B. Training: A factory employed and trained representative of the manufacturer shall visit the site and provide operator training services, in addition to equipment start-up services, as specified in Section 01650, Starting of Systems. A minimum of one day of training will be required.

C. A factory-trained representative shall be provided for installation supervision, start-up and test services and operation and maintenance personnel training services. The representative shall make a minimum of 3 visits, minimum 8 hours on-site for each visit, to the site. The first visit shall be for assistance in the installation of equipment. The second visit shall be for checking the completed installation and start-up of the system. The third visit shall be as described under Section 01821, Instruction of Operations and Maintenance Personnel. Manufacturer’s representative shall test operate the system in the presence of the ENGINEER and verify that the equipment conforms to the requirements. Representative shall revisit the job site as often as necessary until all deficiencies have been corrected and the installation is entirely satisfactory.

D. All costs, including travel, lodging, meals, and incidentals, shall be considered as included in the CONTRACTOR'S lump sum bid price.

++ END OF SECTION ++

SECTION 11715

CHEMICAL METERING PUMPS AND APPURTENANCES

PART 1 - GENERAL

1.1 SUMMARY

A. Furnish and install chemical metering pumps and appurtenances. The chemical metering pumps and appurtenances shall be located at the MFS Chemical Facility, the ACH Facility and the Modified Bulk Sodium Hypochlorite Facility as shown on the Drawings and as specified herein for the conveyance of Sodium hypochlorite (NaOCl – 12.5%), Citric acid (50%), Sulfuric Acid (H_2SO_4 – 50%), Sodium bisulfite ($NaHSO_3$ – 38%), Sodium hydroxide (NaOH – 50%), Aluminum chlorohydrate (ACH – 40%) to the following systems:
   1. Self-Cleaning Strainers.
   2. Membrane Facility.

1.2 SECTION INCLUDES

A. Chemical metering pumps.

B. Pulsation dampeners.

C. Degassing valve.

D. Pressure relief valve.

E. Pressure gauges/diaphragm seals.

F. Diaphragm valves.

G. Wye strainers.

H. PVC spray hose.

I. Pre-cast polymer concrete trench.

J. Flexible couplings.

K. Dry disconnect coupling.

L. Control panel.

M. Pipe Supports.

1.3 RELATED SECTIONS

A. Section 01300, Submittals.

B. Section 01640, Materials and Equipment.

C. Division 13, Special Construction.

D. Section 15065, Thermoplastic Pipe and Accessories.

E. Division 16, Electrical.

1.4 REFERENCE STANDARDS

A. Comply with applicable provisions and recommendations of the following, except as otherwise shown or specified:
   1. Standards of National Electrical Manufacturer's Association.
   2. Recommendations of the Chlorine Institute, Inc.
   3. Occupational Safety and Health Act.
   4. Joint Industrial Council.
   5. Instrument Society of America.
   6. American Water Works Association.
   7. National Fire Protection Association.

1.5 WARRANTY

A. The manufacturer shall warrant the units being supplied to the OWNER against defects in workmanship and material for a period of one year under normal use, operation, and service. The warranty shall cover parts and labor and shall be in printed form and apply to all similar units.

B. Any service require for the actuator that fall within the parameter of the warranty conditions shall be provided by the manufacturer or its certified representative to provide the service required.

1.6 SUBMITTALS

A. The CONTRACTOR shall provide descriptive submittals in accordance with the Data Reference Symbols defined in Section 01300, Submittals. CONTRACTOR shall submit all equipments and appurtenances specified for in this Section as follows:
   1. Metering Pumps: Shop Drawings:
      a. Letters of Certification of Compliance on materials, equipment, etc.
      b. Final Certified Drawings showing outline dimensions, foundation layout or mounting information, and other pertinent dimensions.

c. Field erection instructions, assembly drawings and/or diagrams, detailed reference drawing lists, lists of erection details, and list of spare parts supplied with equipment.
d. Shop Detail Drawings showing individual sub- assemblies and fabricated pieces with material specifications and other applicable data.
e. Installation instructions, operating and/or service manuals, and all other data pertinent to operating or servicing the complete apparatus. Preventative maintenance instructions and recommended frequency.
f. Schematic and wiring diagrams of power, control, and piping systems. A detailed description of operation shall be included for each diagram to describe all modes of operation of the system indicated. Where the integrated system requires interlocking and control of other components in normal operation, these components shall be included in the description of operation.
g. General bulletins and catalog cuts describing complete apparatus, including operating principles and fundamentals.
h. Service data sheets showing design performance, utility requirements, etc., as applicable to the specific duty for which the equipment is furnished.
i. Certified head and capacity curves for pumps. Impeller size furnished and maximum size available shall be noted on these data sheets.
j. Curves and/or data for overall range of operation from minimum to maximum capacity or load, showing capacity or load, utilities motive medium required, total or incremental differential head, and other pertinent information applicable to the equipment or its component assemblies.
k. Materials of construction of all components.

2. Pulsation Dampeners, Valves, Pressure Gauges, Wye Strainer, PVC Spray Hose, Flexible Couplings, and Dry Disconnect Coupling: Shop Drawings:
   a. Letters of Certification of Compliance on materials, equipment, etc.
   b. Final Certified Drawings showing outline dimensions, foundation layout or mounting information, and other pertinent dimensions.
   c. Field erection instructions, assembly drawings and/or diagrams, detailed reference drawing lists, lists of erection details, and list of spare parts supplied with equipment.
   d. Shop Detail Drawings showing individual sub- assemblies and fabricated pieces with material specifications and other applicable data.
   e. Installation instructions, operating and/or service manuals, and all other data pertinent to operating or servicing the complete apparatus. Preventative maintenance instructions and recommended frequency.
   f. General bulletins and catalog cuts describing complete apparatus, including operating principles and fundamentals.
   g. Materials of construction of all components.
3. Control Panel: Shop Drawings:
   a. Refer to Division 13, Special Construction, and Division 16, Electrical.

B. Submit Drawings showing fabrication, dimensions, capacity, weight, materials of construction, electrical diagrams and bill of materials, including manufacturers, and installation piping.

C. Submit pump data and performance curves showing efficiency, NPSH, flow, pressure, horsepower, and shut-off head.

D. Submit documentation that the manufacturer has produced, supplied and placed into satisfactory service, equipment similar to that specified herein.

E. No equipment shall be shipped until the Shop Drawings are approved by the ENGINEER.

F. Submit complete Installation, Operation, and Maintenance Manuals, including copies of all approved Shop Drawings.

G. A copy of this specification section, with addendum updates included, and all referenced and applicable sections, with addendum updates included, with each paragraph check-marked to indicate specification compliance or marked to indicate requested deviations from specification requirements. Check marks (✓) shall denote full compliance with a paragraph as a whole. If deviations from the specifications are indicated, and therefore requested by the CONTRACTOR, each deviation shall be underlined and denoted by a number in the margin to the right of the identified paragraph, referenced to a detailed written explanation of the reasons for requesting the deviation. The ENGINEER shall be the final authority for determining acceptability of requested deviations. The CONTRACTOR shall furnish equipment and/or services as specified if an exception and/or deviation is rejected. The remaining portions of the paragraph not underlined will signify compliance on the part of the CONTRACTOR with the specifications. Failure to include a copy of the marked-up specification sections, along with justification(s) for any requested deviations to the specification requirements, with the submittal shall be sufficient cause for rejection of the entire submittal with no further consideration.

H. The CONTRACTOR shall submit the preventive maintenance information package as part of the shop drawing submittal package to the ENGINEER for review and approval. **SHOP DRAWING SUBMITTAL PACKAGE WILL NOT BE APPROVED WITHOUT ACCEPTANCE OF PREVENTIVE MAINTENANCE INFORMATION.**

PART 2 - PRODUCTS

2.1 CHEMICAL METERING PUMPS

A. Chemical Metering Pumps:

1. Positive displacement, diaphragm type chemical metering pumps shall be provided to deliver 40% aluminum chlorohydrate solution to the self-cleaning strainers, 12.5% sodium hypochlorite, 50% citric acid, 50% Sulfuric Acid, 38% sodium bisulfite, 50% sodium hydroxide, solution to the CIP system at the membrane facility, and 12.5% sodium hypochlorite solution to the membrane permeate pipe at the membrane facility. Chemical metering pumps shall be capable of 24 hour per day operation. Discharge pressure shall be sufficient to feed the chemicals from the chemical facility at a specified rate to meet the design criteria.

B. Operating Conditions:
   1. Each pump shall have a maximum capacity as follows:

Chemical	Chemical Concentration (%)	Location/Facility	Maximum Capacity (gph)
ACH	40	ACH Facility	5.00
Sodium Hypochlorite	12.5	MFS Chemical Facility	744.00
Citric Acid	50	MFS Chemical Facility	576.00
Sulfuric Acid	50	MFS Chemical Facility	45.60
Sodium Bisulfite	38	MFS Chemical Facility	82.20
Sodium Hydroxide	50	MFS Chemical Facility	208.20
Sodium Hypochlorite	12.5	Modified Bulk Sodium Hypochlorite Facility	14.00

C. Pump Construction:
   1. A steel and nodular iron non-loss-motion stroke adjust mechanism, driven by a direct coupled variable speed DC motor, shall actuate a flat, Teflon faced composite diaphragm. Solenoid-driven pumps, lost-motion mechanically actuated diaphragm pumps and hydraulically actuated diaphragm pumps will not be accepted. The liquid ends shall provide for easy maintenance and integral sight flow indication via clear PVC cartridge-type check valves. Conventional threaded valves and external sight flow indicators will not be allowed.

D. Drive:
   1. A steel and nodular iron non-loss-motion stroke adjust mechanism shall be housed in a corrosion resistance, epoxy painted, cast iron gearbox. All drive bearings shall be tapered rollers; all fasteners shall be oil-bath lubricated. Stroke

length shall be controlled manually via a 10-turn micrometer-type adjuster. A percent scale and vernier shall indicate stroke length in 0.25% increments. Each revolution of the knob shall indicate stroke length by 10%.

E. Liquid End:
   1. The process diaphragm shall be of Hypalon construction. It shall incorporate convolutions, for unconstrained rolling action and a steel backing plate for volumetric accuracy. An O-ring groove in the head's diaphragm cavity will provide for a complete leak-free seal. Positive flow shall be ensured via cartridge-type check valves. The valve retainers shall be clear CPVC for integral sight flow indication. They shall allow a compression seal to the pump head and pipe connections via O-rings. Valve service or removal shall not require any disturbances to the pump head pipeworks. A secondary diaphragm shall be completely sealed to separate the pump head from the drive unit in order to eliminate any risk of cross-contaminating gearbox lubricant and process fluid.

F. Control:
   1. Each pump shall automatically shut off if a low level is sensed in the appropriate chemical tanks.

G. Manufacturer:

H. Acceptable Manufacturers:
   1. UGSI Chemical Feed, Inc,
   2. Or approved equal.
   3. The naming of a manufacturer in this Specification is not an indication that the manufacturer's standard equipment is acceptable in lieu of the specified component features. Naming is only an indication that the manufacturer may have the capability of engineering and supplying a system as specified.

2.2 PULSATION DAMPENERS

A. Schedule:
   1. Chemical: Sodium hypochlorite (NaOCl – 12.5%), Citric acid (50%), Sulfuric Acid (H_2SO_4 – 50%), Sodium bisulfite ($NaHSO_3$ – 38%), Sodium hydroxide (NaOH – 50%), and Aluminum chlorohydrate (ACH – 40%).
   2. Minimum Volume: 90 cubic inches per pulsation dampener.
   3. Bladder Material: Hypalon.

B. Materials of Construction:
   1. Wetted Parts: PVC.
   2. Hardware: Stainless steel.
   3. Air Fittings: Brass.
   4. Each unit shall be equipped with charging valve and 0-160 psig gas pad pressure gauge and integral piping fittings.
   5. Provide a nitrogen gas bottle and cart for use in charging pulsation dampeners.

C. Features:
   1. Pulsation damper required on the discharge piping.
   2. Pulsation damper shall be single diaphragm, bladder design. Diaphragm shall be constructed of hypalon.

D. Manufacturer:
   1. Pulsation dampener shall be supplied by Primary Fluid Systems, Inc. or approved equal.

2.3 DEGASSING VALVE

A. General:
   1. The automatic degassing valve is designed to vent gases that cause vapor lock in metering pumps. Degassing valves shall be designed for applications using Sodium hypochlorite (NaOCl – 12.5%), Citric acid (50%), Sulfuric Acid (H_2SO_4 – 50%), Sodium bisulfite ($NaHSO_3$ – 38%), Sodium hydroxide (NaOH – 50%), and Aluminum chlorohydrate (ACH – 40%)..

B. Materials of Construction:
   1. Valve Body: CPVC.
   2. Seal: Viton.
   3. Top and Bottom Connection: 1/2-inch NPT.

C. Manufacturer:
   1. Degassing valve shall be supplied by Primary Fluid Systems, Inc. or approved equal.

2.4 PRESSURE RELIEF VALVES

A. General:
   1. The pump discharge line shall include an external diaphragm type pressure relief valve to protect piping systems from over-pressures, as shown on the Drawings.

B. Materials of Construction:
   1. Valve Body: Type IV, Grade 1, CPVC.
   2. Seals: Teflon.
   3. Diaphragm: Teflon; suitable for Sodium hypochlorite (NaOCl – 12.5%), Citric acid (50%), Sulfuric Acid (H_2SO_4 – 50%), Sodium bisulfite ($NaHSO_3$ – 38%), Sodium hydroxide (NaOH – 50%), and Aluminum chlorohydrate (ACH – 40%).

C. Features:
   1. Valve pressure setting shall be factory set and field adjustable without disconnecting the valve from the line.
   2. Size: As shown on the Drawings.
   3. Capacity: Equal to or greater than pumping head capacity at set pressure.
   4. Set pressure: 50 psi.

D. Manufacturer:
   1. Pressure relief valves shall be supplied by Primary Fluid Systems, Inc. or approved equal.

2.5 PRESSURE GAUGES

A. General:
   1. Pressure gauges shall be selected so that the normal operating pressure falls between 50% and 80% of full scale. The face shall be 4-1/2-inches in diameter, 270 degree movement, 1% accuracy, full-scale, and suitable for bottom stem mounting.
   2. Gauges shall have a Type 316 stainless steel bourdon tube, 300 Series stainless steel case, Type 316 stainless steel socket, shatterproof glass, and 1/4-inch bottom connection.
   3. Gauges shall be a premium grade, heavy-duty bourdon-tube unit with pulsation dampening system. Snubbers or orifices shall not be utilized. Gauges shall be Ashcroft General Service Gauge, Type 1009, or approved equal. Gauges shall have diaphragm seals with 1/2-inch process connection, Titanium housing, and Titanium diaphragm. The fill fluid shall be silicone. Diaphragm seal shall be Ashcroft Type 101 or approved equal.

2.6 DIAPHRAGM VALVES

A. Valves for 2-inch Diameter or Less Pipe:
   1. Diaphragm valves shall be true union design, socket connection, CPVC body with Teflon diaphragm and seals. Type 304 stainless steel shall be used for exposed metal hardware. Valves shall have Teflon sandwiched gas barrier diaphragm to prevent chlorine gas leakage. All shall be suitable hardware for Sodium hypochlorite (NaOCl – 12.5%), Citric acid (50%), Sulfuric Acid (H_2SO_4 – 50%), Sodium bisulfite ($NaHSO_3$ – 38%), Sodium hydroxide (NaOH – 50%), and Aluminum chlorohydrate (ACH – 40%)..
   2. Diaphragm valves shall be of the size as shown on the Drawings. Valves shall be Type 14, as manufactured by Asahi/America, Inc., or approved equal.

B. Valves for Greater Than 2-inch Diameter Pipe:
   1. Diaphragm valves shall be flanged design, CPVC body with Teflon diaphragm and seals. Type 304 stainless steel shall be used for exposed metal hardware. Valves shall have Teflon sandwiched gas barrier diaphragm to prevent chlorine gas leakage. All shall be suitable hardware for Sodium hypochlorite (NaOCl – 12.5%), Citric acid (50%), Sulfuric Acid (H_2SO_4 – 50%), Sodium bisulfite ($NaHSO_3$ – 38%), Sodium hydroxide (NaOH – 50%), and Aluminum chlorohydrate (ACH – 40%).
   2. Diaphragm valves shall be of the size as shown on the Drawings. CONTRACTOR shall provide the necessary flange connections to the

connection piping for a complete valve installation. Valves shall be Type G as manufactured by Asahi/America, or approved equal.

2.7 WYE STRAINER

A. General:
   1. The pump suction lines shall include a strainer, as shown on the Drawings. The wye strainer shall prevent dirt and debris in the chemical entering the pump.

B. Materials of Construction
   1. Strainer Body: Class 23447 per ASTM D1784, CPVC.
   2. Strainer: 1/16-inch perforated plastic, suitable for Sodium hypochlorite (NaOCl – 12.5%), Citric acid (50%), Sulfuric Acid (H_2SO_4 – 50%), Sodium bisulfite ($NaHSO_3$ – 38%), Sodium hydroxide (NaOH – 50%), and Aluminum chlorohydrate (ACH – 40%).

C. Manufacturer:
   1. Wye strainer shall be supplied by Hayward Industrial Products, Inc. or approved equal.

2.8 PRE-CAST POLYMER CONCRETE TRENCH

A. General:
   1. The material covered by these Specifications shall be furnished by a reputable and qualified manufacturer of proven ability who has regularly engaged in the manufacture and installation of pre-cast polymer concrete trench. Manufacturer of the polymer concrete trench shall have a minimum five years of experience with Projects similar in scope to this Project.
   2. Pre-cast polymer concrete trench manufacturer shall be experienced in successfully producing polymer drainage fabrications similar to those indicated in the Drawings, with sufficient production capacity to produce required units without causing delay in the Work.
   3. Pre-cast polymer concrete trench and grating shall be designed to withstand Loading Class C per DIN 19580.
   4. Pre-cast polymer concrete trench shall have a neutral slope with minimum 4-inch depth. Grating shall not include any perforations or slots to allow water to mitigate through.

B. Materials of Construction:
   1. Trench: Pre-cast polymer concrete utilizing vinyl ester resin.
   2. Grating: Ductile iron with solid surface.

C. Features:
   1. Grating shall be attached to the trench utilizing stainless steel lock down bolts and bars.
   2. Provide grating sections in lengths to match trench sections.

3. Top of each channel, which meets with the grating surface, shall include a stainless steel backing plate extending over the top of the trench to prevent chipping.
4. Provide end caps and transition pieces for female to female connections and male to male connections for a complete installation.

D. Manufacturer:
1. Strongwell, Lenoir City, TN.
2. ACO Polymer Products, Chardon, OH.
3. Approved equal.

2.9 CPVC PIPING

A. General: For CPVC Piping: Refer to Section 15065, Thermoplastic Pipe and Accessories.

2.10 FLEXIBLE COUPLINGS

A. General:
1. All chemical piping shall include a flexible coupling as recommended by pipe manufacture.
2. All flexible couplings shall be UV protected for outdoor applications.
3. All flexible couplings shall come complete with flange connections and joint restraints approved by the ENGINEER.
4. All flexible couplings shall be resistant to Sodium hypochlorite (NaOCl – 12.5%), Citric acid (50%), Sulfuric Acid (H_2SO_4 – 50%), Sodium bisulfite ($NaHSO_3$ – 38%), Sodium hydroxide (NaOH – 50%), and Aluminum chlorohydrate (ACH – 40%).

B. Manufacturer:
1. Flexible coupling shall be Proco Series 443B or approved equal.

2.11 TANK FILL - DRY DISCONNECT COUPLING

A. General:
1. The tank fill line shall include a dry disconnect coupling, as shown on the Drawings. The dry disconnect coupling shall prevent any excess chemical from leaking due tank filling operations.
2. Provide dust cap of the same material as the disconnect coupling.

B. Materials of Construction:
1. Body: Hastalloy C.

C. Manufacturer:
1. Dry disconnect coupling shall be the Kamvalok model as manufactured by OPW, Cincinnati, OH or approved equal.

2.12 CONTROL PANEL

A. General:
   1. Furnish an air conditioned NEMA 4X stainless steel control panel for the metering pumps. The control panel shall be supplied as shown on P&IDs and as specified in Division 13, Special Construction. Control panel shall be mounted on a unistrut rack, elevated outside the secondary containment area.

2.13 PIPE SUPPORTS

A. General:
   1. Supports and racks for use on all electrical conduit and chemical solution piping within the MFS Chemical Facility, the ACH Facility and the Modified Bulk Sodium Hypochlorite Facility, shall be Type 316 stainless steel. The pipe supports shall include all strut channels, fittings, bolts, nuts, washers, and anchors as shown on the Drawings.

PART 3 - EXECUTION

3.1 INSTALLATION/START-UP TESTING

A. All system equipment shall be installed per manufacturer specifications and approved Shop Drawings.

B. All equipment shall be operationally-tested by the CONTRACTOR at the job site following installation of the equipment, controls, valves, and piping. Should the tests indicate any malfunction, the CONTRACTOR shall make all necessary repairs and/or adjustments. Tests and adjustments shall be repeated until, in the opinion of the ENGINEER, the installation is complete and the equipment is functioning properly and accurately, and is ready for permanent, continuous operation.

3.2 MANUFACTURER'S FIELD SERVICE

A. A factory trained representative of the chemical metering pumps shall be provided for installation supervision, start-up and test services, and operation and maintenance personnel training services. The factory representatives shall make a minimum of one visit to the site (minimum of eight hours). The visit shall be for assistance in the installation of the equipment, checking the completed installation, start-up of the system, and training of the operators.

B. All costs, including travel, lodging, meals, and incidentals, shall be considered as included in the CONTRACTOR'S lump sum bid price.

++ END OF SECTION ++

SECTION 12492

HORIZONTAL LOUVER BLINDS

PART 1 - GENERAL

1.1 SECTION INCLUDES

A. Horizontal slat louver blinds.

B. Operating hardware.

1.2 REFERENCE STANDARDS

A. WCMA A100.1 - Safety of Window Covering Products; 2018.

1.3 SUBMITTALS

A. Product Data: Provide data indicating physical and dimensional characteristics.

B. Shop Drawings: Indicate opening sizes, tolerances required, method of attachment, clearances, and operation.

C. Shop Drawings: Submit for approval the following:
   1. A copy of this specification section, with addendum updates included, and all referenced and applicable sections, with addendum updates included, with each paragraph check-marked to indicate specification compliance or marked to indicate requested deviations from specification requirements. Check marks (✓) shall denote full compliance with a paragraph as a whole. If deviations from the specifications are indicated, and therefore requested by the CONTRACTOR, each deviation shall be underlined and denoted by a number in the margin to the right of the identified paragraph, referenced to a detailed written explanation of the reasons for requesting the deviation. The ENGINEER shall be the final authority for determining acceptability of requested deviations. The CONTRACTOR shall furnish equipment and/or services as specified if an exception and/or deviation is rejected. The remaining portions of the paragraph not underlined will signify compliance on the part of the CONTRACTOR with the specifications. Failure to include a copy of the marked-up specification sections, along with justification(s) for any requested deviations to the specification requirements, with the submittal shall be sufficient cause for rejection of the entire submittal with no further consideration.
   2. The CONTRACTOR shall submit the preventive maintenance information package as part of the shop drawing submittal package to the ENGINEER for review and approval. **SHOP DRAWING SUBMITTAL PACKAGE WILL**

NOT BE APPROVED WITHOUT ACCEPTANCE OF PREVENTIVE MAINTENANCE INFORMATION.

PART 2 - PRODUCTS

2.1 MANUFACTURERS

A. Horizontal Louver Blinds Without Side Guides:
   1. Hunter Douglas Architectural; CD Model: www.hunterdouglasarchitectural.com/#sle.
   2. Levolor; Metal Blinds: www.levolor.com/commercial/#sle.
   3. SWFcontract, a division of Springs Window Fashions, LLC: www.swfcontract.com/#sle.

2.2 BLINDS

A. Description: Horizontal slat louvers hung from full-width headrail with full-width bottom rail.

B. Manual Operation: Control of raising and lowering by cord with full range locking; blade angle adjustable by control wand.

C. Metal Slats: Spring tempered pre-finished aluminum; radiused slat corners, with manufacturing burrs removed.
   1. Width: 1 inch (25 mm).
   2. Thickness: 0.008 inch (0.20 mm).
   3. Color: As selected by Architect.

D. Slat Support: Woven polypropylene cord, ladder configuration.

E. Head Rail: Pre-finished, formed aluminum box, with end caps; internally fitted with hardware, pulleys, and bearings for operation; same depth as width of slats.
   1. Color: Same as slats.

F. Bottom Rail: Pre-finished, formed steel; with end caps.
   1. Color: Same as headrail.

G. Lift Cord: Braided nylon; continuous loop; complying with WCMA A100.1.
   1. Free end weighted.
   2. Color: As selected by Architect.

H. Control Wand: Extruded hollow plastic; hexagonal shape.
   1. Non-removable type.
   2. Length of window opening height less 3 inch (76 mm).
   3. Color: Clear.

I. Headrail Attachment: Wall brackets.

2.3 FABRICATION

A. Determine sizes by field measurement.

B. Fabricate blinds to fit within openings with uniform edge clearance of 1/2 inch (12 mm).

PART 3 - EXECUTION

3.1 EXAMINATION

A. Verify that openings are ready to receive the work.

3.2 INSTALLATION

A. Install blinds in accordance with manufacturer's instructions.

B. Secure in place with flush countersunk fasteners.

3.3 TOLERANCES

A. Maximum Variation of Gap at Window Opening Perimeter: 1/4 inch (6 mm).

B. Maximum Offset From Level: 1/8 inch (3 mm).

3.4 ADJUSTING

A. Adjust blinds for smooth operation.

3.5 CLEANING

A. Clean blind surfaces just prior to occupancy.

++ END OF SECTION ++

SECTION 13121

METAL CANOPIES

PART 1 - GENERAL

1.1 SECTION INCLUDES

A. Pre-engineered and shop fabricated structural steel building frame.

B. Sloped roof system including ridge vents, gutters, and downspouts.

1.2 SYSTEM DESCRIPTION

A. Single and multi-span modified gable rigid frame, tapered beam, and columns.

B. Primary Framing: Rigid frame of rafter beams and columns. Standard rod bracing in the roof and rigid frames in the sidewalls.

C. Secondary Framing: Purlins, eave struts, flange bracing, clips, and other items.

D. Roof System: Pre-formed metal panels and accessory components.

1.3 DESIGN REQUIREMENTS

A. All steel members, base plates, and anchors to be designed by pre-engineered building manufacturer or a Professional Structural Engineer experienced in design of this Work and licensed in the State of Arizona, except where indicated on the Plans.

B. Members to withstand dead load, seismic load, auxiliary loads, collateral loads, and design loads due to pressure and suction of wind calculated in accordance with the most recent version of the International Building Code and loads listed on the drawings

C. Roof system to withstand imposed loads as indicated on the drawings and to comply with deflection requirements listed on the drawings.

D. Roof system to meet Class 90 UL wind uplift rating.

E. Assembly to permit movement of components without buckling, failure of joint seals, undue stress on fasteners or other detrimental effects, when subject to temperature range of 20° F to 150° F.

F. Size and fabricate columns and roof systems free of distortion or defects detrimental to appearance or performance.

1.4 VENTILATION

A. Provide standard manufacturer 12-inches continuous ridge vent. Ridge vent to be discontinuous 10 feet from each end of roof.

1.5 SUBMITTALS

A. Submit under provisions of Section 01300, Submittals.

B. Shop Drawings: Indicate assembly dimensions, locations of structural members, connections, attachments, openings, and loads.

C. Indicate framing anchor bolt settings, sizes, locations from datum, and foundation loads.

D. Product Data: Provide data on profiles, component dimensions, and fasteners.

E. Manufacturer's Certificate: Certify that pre-engineered building meets or exceeds Specifications. Naming of a manufacturer in the Specifications is not an indication that the manufacturer's proposed or standard equipment is acceptable in lieu of the specified components and features. Naming is only an indication that the manufacturer may have the capability of engineering and supplying a system as specified.

1.6 PROJECT RECORD DOCUMENTS

A. Submit under provisions of Section 01700, Contract Closeout.

1.7 QUALITY ASSURANCE

A. Fabricate structural steel members in accordance with AISC - Specification for the Design, Fabrication and Erection of Structural Steel for Buildings.

1.8 QUALIFICATIONS

A. Manufacturer: Company specializing in manufacturing the products specified in this Section with minimum three years documented experience.

B. Design structural components under direct supervision of a Professional Structural Engineer experienced in design of this Work and licensed in the State of Arizona.

1.9 WARRANTY

A. Provide 20 year warranty under provisions of Section 01700, Contract Closeout.

B. Warranty: Include coverage for exterior pre-finished surfaces to cover pre-finished color coat against chipping, cracking or crazing, blistering, peeling, chalking, or fading.

C. Warranty: Include coverage for weather tightness of building enclosure elements after installation.

PART 2 - PRODUCTS

2.1 MANUFACTURERS/SUPPLIERS

A. Arizona Building Systems, Inc., Phoenix, AZ.

B. Or approved equal.

2.2 METAL DECKING

A. Sheet Steel Stock: ASTM A653 Grade 50, Galvanized to G60 Galvalume steel designation. Minimum 20 gauge metal thickness "Panel-rib" panels as manufactured by Fabral, Varco-Pruden Buildings, or approved equal.

B. Joint Seal Gaskets: Manufacturer's standard.

C. Fasteners: Manufacturer's standard type, galvanized to ASTM A386, 1.25 oz/sq. Ft. finish to match adjacent surfaces when exterior exposed. Roof panels to be fastened through the "low" of the configuration with a No. 12-14 self-drilling fastener. To maintain load requirements and weather tight installation, same finish as cladding, non-corrosive type.

D. Finishes:
   1. Metal Preparation (Exterior): Metal shall have the surfaces carefully prepared for painting on a continuous process coil coating line by alkali cleaning, hot water rinsing, application of chemical conversion coating, cold water rinsing, sealing with an acid rinse, and thorough drying.
   2. Metal Preparation (Interior): Metal shall receive SSPC-SP1 solvent cleaning followed by brush-off abrasive blast cleaning. The surface to be clean, dry, and free of contaminants prior to coating application.
   3. Prime Coating (Exterior): A base coat of Tnemec Series 66 Hi-Build Epoxoline; one coat; 3-5 mils DFT; spray applied. This prime coat shall be oven cured prior to application of finish coat.
   4. Prime Coating (Interior): A base coat of Tnemec Series 66 Hi-Build Epoxoline; one coat; 3-5 mils DFT; spray applied. The coat shall be factory applied.
   5. Exterior Coating: A 70% Kynar 500 finish shall be applied over the primer. The color of the exterior finish shall match the existing canopies. The finish coating shall be oven-cured.
   6. Interior Finish Coating: A Tnemec Series 66 (color to match the exterior canopy Kynar finish) Hi-Build Epoxoline; one coat; 4-6 mils DFT; spray applied. The coat shall be factory applied.

2.3 STRUCTURAL STEEL

A. Structural Steel Members: ASTM A36, A529, or A572, Grade 50. All structural steel members are to have elongated holes to allow for thermal expansion and contraction.

B. Structural Tubing: ASTM A500, Grade B.

C. G60 14 gauge galvanized purlins.

D. Surface Preparation: All structural items shall receive SSPC-SP6 commercial abrasive blast cleaning.

E. Prime Coat: All structural items shall receive a Tnemec Series 66 Hi-Build Epoxoline; one coat; 3-5 mils DFT (dry film thickness), spray applied. Coat to be factory applied.

F. Finish Coat (Interior Columns and Purlins): All interior columns and purlins, and other structural items not exposed to UV, shall receive a Tnemec Series 66 (color to match the exterior canopy Kynar finish) III - Build Epoxoline (polyamide epoxy coating); one coat, 4-6 mils DFT; spray applied. Finish can be field applied.

G. Finish Coat (Exterior Columns): All exterior columns and other structural items exposed to UV, shall receive a Tnemec Series 73 (color to match the exterior canopy Kynar finish) Endura - Shield III (acrylic polyurethane coating); one coat; 2.5-3 mils DFT; spray applied. Finish can be field applied.

2.4 GUTTERS, DOWN SPOUTS, RIDGE VENTS, AND LIGHTING RODS

A. Fabricate of same material, finish, and color as roofing material.

B. Form gutters and downspouts of constant profile and size to collect and remove water. Fabricate with connection pieces.

C. Form sections in maximum possible lengths, item exposed edges. Allow for expansion at joints.

D. Fabricate support straps of same material and finish as roofing metal, color as selected by the OWNER.

E. Lighting reflection shall be installed in accordance with Section 16670, Lightning Protection Systems.

2.5 GENERAL

A. Plate or Bar Stock: ASTM A529.

B. Anchor Bolts: ASTM A325, unprimed.

C. Bolts, Nuts, and Washers: ASTM A325, A49, or A307. All bolts, nuts, and washers must be galvanized.

D. Welding Materials: AWS D1.1; type required for materials being welded.

E. Grout: Non-shrink type, premixed compound consisting of non-metallic aggregate, cement, water reducing, and plasticizing agents, capable of developing minimum compressive strength of 2,400 psi in two days and 7,000 psi in 28 days.

F. Sealant: Manufacturer's standard type, non-staining, elastomeric, skinning.

G. Fabricate members in accordance with AISC Specification for plate, bar tube, or rolled structural shapes.

H. Anchor Bolts: Formed with bent shank, assembled with template for casting into concrete.

I. Provide framing for openings.

J. Internal and External Corners: Same material thickness and finish as adjacent material, profile brake formed, shop cut and factory mitered to required angles.

K. Flashings, Closure Pieces, Facia, Infills, Caps: Same material and finish as adjacent material, profile to suit system.

PART 3 - EXECUTION (NOT USED)

++ END OF SECTION ++

SECTION 13128

AUTOMATED SLIDING GATE OPERATOR

PART 1 - GENERAL

1.1 SUMMARY

A. Furnish and install a pre-wired, self-contained, exterior automatic sliding gate operator. The operator shall be a heavy duty slide gate operator with manual override, capable of handling a minimum weight capacity of 2,000 lbs, a minimum opening rate of 12-in./sec an adjustable closing timer, limit switches, quick disconnects, and external connections for all listed requirement and accessories.

B. The equipment furnished for the automatic sliding gate operator shall include but not limited to: loop detector, digital keypad with speaker, pushbutton devices, an external obstruction sensor, and all installation hardware (rail, rollers, and pins).

C. Install a gate controller with capacity of minimum 4 gates located at Administration Building receptionist desk. Integrate control of existing gate at plant entry into the new unit. Remove and salvage existing controller.

1.2 REFERENCES

A. ASTM A36/A36M, Structural Steel Specifications.

B. AFBMA-9, Load Ratings and Fatigue Life for Ball Bearings.

C. AGMA 2001-B, Fundamental Rating Factors and Calculation Methods for Involute Spur and Helical Gear Teeth.

D. ASTM A325, Fastener Specification.

E. ASTM A316, Bolt Specification.

F. AWS, American Welding Society Current Standards.

G. ASTM A283C, Steel Plate Specification.

H. NEMA, Motor Design Standards and Control Enclosures.

I. National Electrical Code (NEC).

J. American Society for Testing and Materials (ASTM) B187.

K. National Association of Corrosion Engineers (NACE).

L. ANSI/AWWA D104-97.

1.3 RELATED SECTIONS

A. Section 01300, Submittals.

B. Section 01640, Materials and Equipment.

C. Section 01650, Starting of Systems.

D. Section 03300, Cast-In-Place Concrete.

E. Section 09900, Painting.

F. Section 16222, Motors.

G. Division 16, Electrical.

1.4 SUBMITTALS

A. Shop Drawings: Submit for approval the following:
   1. Letters of Certification of Compliance on materials, equipment, etc.
   2. Final Certified Drawings showing outline dimensions, foundation layout or mounting information, and other pertinent dimensions.
   3. Field erection instructions, assembly drawings and/or diagrams, detailed reference drawing lists, and lists of erection details.
   4. Shop detail drawings showing individual sub- assemblies and fabricated pieces with material specifications and other applicable data.
   5. Installation instructions, operating and/or service manuals, and all other data pertinent to operating or servicing the complete apparatus. Preventative maintenance instructions and recommended frequency.
   6. Schematic and wiring diagrams of power, control, and piping systems. A detailed description of operation shall be included for each diagram to describe all modes of operation of the system indicated. Where the integrated system requires interlocking and control of other components in normal operation, these components shall be included in the description of operation.
   7. General bulletins and catalog cuts describing complete apparatus including operating principles and fundamentals.
   8. Service data sheets showing design performance, utility requirements, etc., as applicable to the specific duty for which the equipment is furnished.
   9. Materials of construction of all components.
   10. Renewal parts list with diagrammatic or cross-section drawings showing part identification. Material analysis or trades designation for each significant part is to be noted on parts lists or on a separate sheet.
   11. Stuffing box sizes; packing sizes; specifications and arrangement; and mechanical seal details, specifications, etc., if furnished in equipment.

12. Bearing manufacturer's standard identification and/or interchangeable number for all anti-friction bearings in the equipment proper and its accessory items.
13. Material gradation, design mix, job mix formula, and/or material analysis.
14. Drawings showing connections to adjacent construction (fence) range of travel, all electrical and mechanical connections to the operator.
15. Design information clearly describing the sizes, dimensions and arrangement of all major components.
16. Manufacturer's installation instructions.
17. Control system data, control panel layout, schematics, and wiring diagrams.
18. A copy of this Specification Section with addenda updates, and all referenced sections with addenda updates, with each paragraph check marked to show Specification compliance or marked to show deviations.

1.5 SYSTEM DESCRIPTION

A. Design Requirements:
   1. Sliding Gate Operator:
      a. Minimum Horsepower Required: 1 Hp.
      b. Design Minimum Slide Gate Weight Capacity: 2,000 lbs.
      c. Minimum Rate of Travel: 12in./sec.

B. Configuration:
   1. Sliding Gate:
      a. Gate Length: 36 feet.
      b. Gate Opening Distance: 26 feet.
      c. Gate Weight: 2,000 lbs.

PART 2 - PRODUCTS

2.1 MANUFACTURERS

A. The slide gate operator shall be as manufactured by Linear/OSCO, MI, Sentex Systems, CA, Hy-Security, WA, or approved equal.

B. The naming of a manufacturer in this Specification is not an indication that the manufacturer's standard equipment is acceptable in lieu of the specified component features. Naming is only an indication that the manufacturer may have the capability of engineering and supplying a system as specified.

2.2 OPERATION

A. Operation shall be by means of a metal rail passing between a pair of rollers. Operator motors shall be hydraulic and in accordance to Section 16222, Motors, and shall not use belts, gears, pulleys, roller chains or sprockets to transfer power to gate panel.

2.3 MATERIALS

A. Standard mechanical components shall include:
   1. Supporting Arms: Cast Aluminum Channel
   2. Drive Release
   3. Limit Switches: Fully adjustable
   4. Electrical Enclosure: NEMA 4X
   5. Cover: 16GA. galvanized sheet metal, painted in accordance to Section 09900, Painting.
   6. Drive Rail: 6061 T6 not less than 1/8-inch thick
   7. Pump Motor: Horsepower as required. 56C, TEFC, continuous duty, 460, 3-phase, with a service factor of 1.15
   8. Photo Eyes: Capable of reversing the direction upon sensing an obstruction.
   9. Remote: Three pushbutton remotes to open gate.
   10. Loop Detector: Ability to open the gate for exiting traffic.
   11. Keypad: Keypad with remote paging, speaker, and ability to open the gate.

2.4 GENERAL

A. Slide gate operator shall be of the motor drive type using slide rails.

B. Drive Motor:
   1. The electric motors shall be totally enclosed and sealed for operation in a moisture-laden atmosphere and suitable for wash down and outdoor severe duty. Conduit boxes shall be gasketed with neoprene or an equivalent material to prevent moisture from entering the stator through the conduit box. Drain holes shall be placed in suitable positions to prevent accumulation of moisture in the motor housing. Sealed, grease lubricated ball or roller bearings shall be provided. The motor shall conform to NEMA Standards.
   2. Drive Motor Characteristics:
      a. Horsepower: Minimum horsepower: 1Hp..
      b. Volts: 460.
      c. Phase: 3.
      d. Frequency, Hertz: 60.
      e. Insulator: Class F.
      f. Service Factor: 1.15.
      g. Ambient Temperature, Degrees C: 50.
      h. Enclosure: TEFC.
   3. The CONTRACTOR shall be responsible for necessary changes; wiring, conduit, and any other necessary appurtenances if motor horsepower specified above varies from equipment supplied.

2.5 ACCESSORIES

A. All accessories shall be supplied by or recommended by the slide gate operator manufacturer.

2.6 LOOP DETECTOR

A. A loop detector shall be installed per the manufacturers' recommendation on the interior of the gate on right side of the road for exiting vehicles. The loop detector shall send a signal to open the right gate only for an exiting vehicle

2.7 OBSTRUCTION SENSOR

A. Photo eyes detector shall be installed on side of the gate such that an obstruction in the gate path will reverse the gate direction.

2.8 KEYPAD AND SPEAKER ACCESS POINT

A. A keypad access station will be located on the outside of the gate in the middle of the road for entering traffic. Upon entering the correct numerical code both slide gates will open. A minimum of 20 stored codes must be usable at anytime. The keypad access station will have a page button that activates a speaker at the security console. The entry unit must provide two-way or bi-directional communication between the keypad location and the security console.

2.9 REMOTE OPENER

A. Three pushbutton remote openers shall be provided, which have the ability to open the gate.

2.10 PAINTING AND SURFACE PREPARATION

A. All paint shall be in accordance to the Plans and Section 09900, Painting. Paint color shall match sliding gate.

PART 3 - EXECUTION

3.1 INSTALLATION

A. Install the gate operator in accordance with the manufacturer's printed instructions, current at the time of installation. Coordinate locations of operators with Contract Drawings and submitted Shop Drawings.

3.2 TESTS

A. Fully assemble and test, at the factory, the gate operator to assure smooth operation, sequencing and electrical connection integrity. Apply physical loads to the operator to simulate field conditions. Tests shall simulate physical and electrical loads equal to the fully rated capacity of the operator components.

B. Check all mechanical connections for tightness and alignment. Check all welds for completeness and continuity.

C. Check all hydraulic hoses and electrical wires to assure that chafing did not occur during shipping or installation.

3.3 MANUFACTURERS' FIELD SERVICE

A. Equipment Start-up: A factory employed representative of the manufacturer shall visit the site and provide installation and start-up services as specified in Section 01650, Starting of Systems. A total of one visit shall be included for a total time of one day (8 hours/day) for start-up services

3.4 MANUFACTURER TRAINING

A. One day 4hr/day for City personnel.

++ END OF SECTION ++

SECTION 13207

FIBERGLASS REINFORCED PLASTIC ABOVE GROUND STORAGE TANKS

PART 1 - GENERAL

1.1 SUMMARY

A. New Installation:
   1. Furnish all labor, materials, tools, equipment, appurtenances, and services to install the following FRP tanks:
      a. MFS Chemical Facility:
         1) One 3,200 gallon (8 feet diameter by 10 feet high) 12.5% Sodium Hypochlorite Tank.
      b. Membrane Filtration Facility:
         1) One 4,500 gallon (Approximately 9 feet diameter by 12 feet high) MFS Backpulse Storage Tank.

1.2 SECTION INCLUDES

A. FRP above ground storage tanks.

1.3 RELATED SECTIONS

A. Section 01300, Submittals.

B. Section 09900, Painting.

C. Section 10400, Equipment Identification Plates.

D. Section 11715, Chemical Metering Pumps and Appurtenances

1.4 REFERENCES

A. ASTM D3299, Specification for Filament Wound Glass Fiber Reinforced Thermoset Resin Chemical Resistant Tanks.

B. ASTM D2563, Level II.

C. Code of Federal Regulations, Title 29, Chapter XVII, Part 1910 – Occupational Safety and Health Standards.

1.5 QUALITY ASSURANCE

A. Manufacturer's Qualifications:

1. The material covered by these Specifications shall be furnished by a reputable and qualified manufacturer of proven ability who has regularly engaged in the manufacture and installation of FRP tanks.
2. Substitution of any component or modification of system shall be made only when approved by the OWNER.
3. FRP tank manufacturer shall be experienced in successfully producing FRP fabrications similar to those indicated in the Drawings, with sufficient production capacity to produce required units without causing delay in the Work.

1.6 WARRANTY

A. The manufacturer shall warrant the units being supplied to the OWNER against defects in workmanship and material for a period of one year under normal use, operation, and service. The warranty shall cover parts and labor and shall be in printed form and apply to all similar units.

B. Any services required for the tank that fall within the parameter of the warranty conditions shall be provided by the manufacturer or its certified representative to provide the service required.

1.7 SUBMITTALS

A. Shop Drawings: Submit for approval the following:
1. Letters of Certification of Compliance on materials, equipment, etc.
2. Final Certified Drawings showing outline dimensions, foundation layout, or mounting information, and other pertinent dimensions.
3. Assembly drawings and/or diagrams, detailed reference drawing lists, and lists of erection details.
4. Shop Detail Drawings showing individual sub-assemblies and fabricated pieces with material specifications and other applicable data.
5. Installation instructions, operating and/or service manuals, and all other data pertinent to operating or servicing the complete apparatus. Preventative maintenance instructions and recommended frequency.
6. Schematic and wiring diagrams of power, control, and piping systems. A detailed description of operation shall be included for each diagram to describe all modes of operation of the system indicated. Where the integrated system requires interlocking and control of other components in normal operation, these components shall be included in the description of operation.
7. General bulletins and product literature describing complete apparatus including operating principles and fundamentals.
8. Service data sheets showing design performance, utility requirements, etc., as applicable to the specific duty for which the equipment is furnished.
9. Head capacity curves for pumps. Impeller size furnished and maximum size available shall be noted on these data sheets.

10. Curves and/or data for overall range of operation from minimum to maximum capacity or load, showing capacity or load, utilities motive medium required, total or incremental differential head, and other pertinent information applicable to the equipment or its component assemblies.
11. Materials of construction of all components.
12. Renewal parts list with diagrammatic or cross-section drawings showing part identification. Material analysis or trades designation for each significant part is to be noted on parts lists or on a separate sheet.
13. Mechanical seal details, specifications, etc., bearing manufacturer's standard identification and/or interchangeable number for all anti-friction bearings in the equipment proper and its accessory items.

B. Shop Tests: Submit for approval:
   1. Pump casings shall be hydrostatically tested to twice the discharge head or 1-1/2 times the shutoff head, whichever is greater.
   2. Running Test: Pump assembly shall be operated from zero to maximum capacity as shown on the approved curve. Results of the test shall be shown in a plot of test curves showing head, flow, horsepower, efficiency, and current. Readings shall be taken at rated speed capacity points including shut-off, design point, and minimum head for which pump is designed to operate.
   3. Each test shall be witnessed by the Factory Registered Engineer, who is an employee of the pump manufacturer. Engineer shall sign and seal all copies of curves and shall certify that hydrostatic tests were performed. Tests shall be conducted in conformance with applicable Hydraulic Institute Standards.
   4. Pumps shall not be shipped until the ENGINEER has approved the test reports.

C. Field Test Results:
   1. Submit a written report giving the results of the required field tests.

D. Manufacturer's Reports:
   1. Submit written report of the results of each visit by a manufacturer's serviceman, including purpose and time of visit, tasks performed, and results obtained.

E. Operation and Maintenance Manuals: Submit complete Operation and Maintenance Manuals, including field erection instructions, in conformance with the Operation and Maintenance Manuals Section of Section 01300, Submittals.

F. A copy of this specification section, with addendum updates included, and all referenced and applicable sections, with addendum updates included, with each paragraph check-marked to indicate specification compliance or marked to indicate requested deviations from specification requirements. Check marks (✓) shall denote full compliance with a paragraph as a whole. If deviations from the specifications are indicated, and therefore requested by the CONTRACTOR, each deviation shall be underlined and denoted by a number in the margin to the right of the identified paragraph, referenced to a detailed written explanation of the reasons

for requesting the deviation. The ENGINEER shall be the final authority for determining acceptability of requested deviations. The CONTRACTOR shall furnish equipment and/or services as specified if an exception and/or deviation is rejected. The remaining portions of the paragraph not underlined will signify compliance on the part of the CONTRACTOR with the specifications. Failure to include a copy of the marked-up specification sections, along with justification(s) for any requested deviations to the specification requirements, with the submittal shall be sufficient cause for rejection of the entire submittal with no further consideration.

G. The CONTRACTOR shall submit the preventive maintenance information package as part of the shop drawing submittal package to the ENGINEER for review and approval. **SHOP DRAWING SUBMITTAL PACKAGE WILL NOT BE APPROVED WITHOUT ACCEPTANCE OF PREVENTIVE MAINTENANCE INFORMATION.**

PART 2 - PRODUCTS

2.1 MANUFACTURERS

A. Acceptable Manufacturers:
   1. Palmer of Texas, Andrews, TX.
   2. Paramount.
   3. Diamond Fiberglass, Victoria, TX.
   4. Approved equal.

2.2 MATERIALS

A. The design, fabrication, erection, and testing of the tank shall be in strict accordance with ASTM D3299, Specification for Filament Wound Glass Fiber Reinforced Thermoset Resin Chemical Resistant Tanks, except as modified herein. The CONTRACTOR must obtain the ENGINEER'S approval for all deviations, exceptions, and substitutions to this Specification and ASTM D3299, including those which are specifically permitted subject to approval of purchaser.

B. Materials:
   1. MFS Chemical Facility:
      a. Sodium hypochlorite (NaOCL) FRP tank materials shall have a Ashland Hetron 992 resin for the corrosion resistant barrier and filament winding, a double Nexus lining, and a BPO-DMA cure, unless otherwise specified on the tank drawings.
   2. Membrane Filtration Facility:
      a. Backpulse FRP tank material shall be fabricated utilizing premium grade isophthalic polyester resin with a one “C” or synthetic veil, such as single Nexus 1012, in the 100 mil inner corrosion liner and premium grade

isophthalic polyester resin in the outer structural overwrap. In addition, the vessel is to receive an exterior gelcoat finish with ultraviolet inhibitors. All coatings to be applied by FRP tank manufacturer.

b. Resin shall be Premium grade vinyl ester resin as recommended by the resin manufacturer for the specific operating environment. Add antimony trioxide or pentoxide for Class I fire rating to the structural laminate only. No thixotropic agents shall be used. Manufacturers: One of the following or equal:
   1) Derakane.
   2) Ashland Hetron.
   3) Interplastic.
   4) Reichhold Dion.

3. Materials used in the manufacture shall be new stock of the best quality and shall be free from all defects and imperfections that might affect the performance of the finished product.
4. All materials shall be of the kind and quality specified and where the quality is not specified, it shall be the best of the respective kinds and suitable for the purpose intended.

2.3 MANUFACTURED UNITS

A. Fabrication:
   1. MFS Chemical Facility:
      a. The FRP resin and cure system shall be suitable for continuous exposure to 12.5% sodium hypochlorite solution, 20% sodium hydroxide solution, and their reaction products.
      b. Tank shell thickness shall be calculated based on liquid levels (both operating and test conditions) at the top of the tank shell.
   2. Membrane Filtration Facility:
      a. The FRP resin and cure system shall be suitable for continuous exposure to 12.5% sodium hypochlorite solution
      b. Tank shell thickness shall be calculated based on a 1.0 specific gravity fluid and on liquid levels (both operating and test conditions) at the top of the tank shell.
   3. FRP tanks shall be fabricated using a four-layer laminate construction process or better.
   4. After fabrication, all cut ends, holes, and abrasions of FRP shapes shall be sealed with a compatible resin coating to prevent intrusion of moisture.
   5. All exposed surfaces shall be smooth and true to form.
   6. Equipment shall be furnished with nameplates of stainless steel. Pertinent design, hydraulic, and mechanical data will be permanently stamped or cast into each nameplate, and shall include manufacturer and model number.
   7. All exterior FRP surfaces shall have a pigmented resin for UV protection; color shall be Tnemec Desert Sands or approved equal.
   8. Visual defects shall be in accordance with ASTM D2563, Level II.

B. Delivery, Storage, and Handling:
   1. All systems, sub-systems, and structures shall be shop-fabricated and assembled into the largest practical size, suitable for transporting.
   2. All materials and equipment necessary for the installation of the FRP tanks and appurtenances shall be stored before, during, and after shipment in a manner to prevent cracking, twisting, bending, breaking, or damage of any kind to the materials or equipment, including damage due to over exposure to the sun. Any material, which in the opinion of the ENGINEER, has become damaged as to be unfit for use, shall be promptly removed from the site of Work and the CONTRACTOR shall receive no compensation for the damaged material or its removal.
   3. Identify and match-mark all materials, items, and fabrications for installation and field assembly.

2.4 COMPONENTS

A. Chemical and Backpulse Storage Tanks:
   1. Design Criteria
      a. Wind Load Design: 100 mph.
      b. Live Load Design: 200 lbs per square foot.
      c. Ambient Temperature: 35° F minimum and 125° F maximum.
      d. Top Tank: Flat top.
   2. Provide a vertical, cylindrical, flat top, flat bottom fiberglass storage tank.
   3. MFS Chemical Facility and Membrane Filtration Facility :
      a. Provide two 24-inched hinged manways with bolted cover. One will be located on the top and the other on the side at the bottom of the tank or as shown on the Drawings.
   4. Provide flanged connections for tank pipe connections, vents, etc., as shown on the Drawings. Connections shall be constructed of the same material as the tank wall with the same inner corrosion barrier. Flanged connections, as shown on the Drawings, shall be gusseted to the tank wall with 1/4-inch thick conical gussets.
   5. Provide integrally molded lifting and anchoring lugs as required for lifting, transporting, and anchoring the tank without structural damage to the tank.
   6. Only Type 316 stainless steel hardware shall be provided for mounting, anchoring, and connecting.
   7. Provide vent for each tank, as shown on the Drawings.
   8. Provide complete tank drain fittings below bottom elevation of the tank. This is to ensure total removal of liquid and any solids inside the tank. Location shall be as shown on the Drawings.

B. Internals and Accessories:
   1. The CONTRACTOR shall require the tank vendor to furnish and install all internals and accessories as noted on individual tank drawings and/or as specified herein.

2. Fittings, flanged nozzles, and manways shall be of hand layup flange and FRP pipe construction. Nozzle flanges shall be of ANSI 150# style.
3. MFS Chemical Facility:
    a. For tanks indicated on the Drawings, the tank vendor shall furnish for CONTRACTOR installation of a clear PVC sight glass and necessary piping calibrated in gallons with diaphragm valves to be located on the bottom sight glass fitting, to shut-off the sight glass, and below the sight glass for sight glass drainage. Diaphragm valves are as specified in Section 11715, Chemical Metering Pumps and Appurtenances.
    b. Gaskets and external bolting shall be furnished for all manholes, hand-holes, and other openings which call for a blind flange or cover. Provide EPDM for testing and servicing of all tanks except sodium hypochlorite tanks. Sodium hypochlorite tanks will be provided with EPDM gaskets for testing and viton gaskets for service. At least four sets of gaskets shall be furnished; two sets for testing and two sets unused with proper protection and identification.
    c. Ladders of fiberglass reinforced plastic construction shall be provided at locations shown on tank drawings and shall include non-skid surfaces with a roof turn and be in compliance with the Code of Federal Regulations, Title 29, Chapter XVII, Part 1910 - Occupational Safety and Health Standards
4. Membrane Filtration System Facility:
    a. Gaskets and external bolting shall be furnished for all manholes, hand-holes, and other openings which call for a blind flange or cover. Provide EPDM gaskets for testing and servicing of all tanks. At least four sets of gaskets shall be furnished; two sets for testing and two sets unused with proper protection and identification.
    b. Ladders of Type 316 stainless steel construction shall be provided at locations shown on tank drawings and shall include non-skid surfaces with a roof turn and be in compliance with the Code of Federal Regulations, Title 29, Chapter XVII, Part 1910 - Occupational Safety and Health Standards.
5. MFS Chemical Facility and Membrane Filtration System Facility:
    a. Safety railing shall be provided around the perimeter of the top of the tank. Safety railing shall be in compliance with the Code of Federal Regulations, Title 29, Chapter XVII, Part 1926 – Occupational Safety and Health Standards.
6. All steel components shall be coated in accordance with Section 09900, Painting, of these Specifications.
7. Each tank shall have a chemical identification sign and a hazardous materials identification diamond sign labeled in accordance with NFPA 704 and Section 10400, Equipment Identification Plates.

C. Chemical Solutions:
    1. MFS Chemical Facility:

a. The CONTRACTOR shall supply 3,200 gallons of 12.5% sodium hypochlorite solution for use in testing and start-up. After such testing is completed the CONTRACTOR shall fill the tanks before closing the Contract.

2. Membrane Filtration System Facility:

a. The CONTRACTOR shall supply 6,000 gallons of potable water for use in testing and start-up. After such testing is completed the CONTRACTOR shall fill the tanks before closing the Contract.

2.5 SPARE PARTS

A. Complete set of spare parts shall be provided for each tank as recommended by the manufacturer. A list of spare parts shall be provided with the Shop Drawings.

2.6 SHOP PAINTINGS

A. The CONTRACTOR shall certify, in writing, that the shop primer and coating system is compatible with the finish coating system in accordance with the Section 09900, Painting.

PART 3 - EXECUTION

3.1 INSTALLATION

A. Prior to the start of erection, tank vendor shall inspect each tank foundation for levelness, and formally notify the CONTRACTOR of the acceptance or rejection of it.

B. Provide chemical resistant anchorage devices and fasteners as specified by the tank manufacturer for securing the tank and appurtenances to the foundation and connecting accessories to tank; include threaded fasteners for concrete expansion anchors, through-bolts, and other connectors as required.

C. All field cut and drilled edges, holes, and abrasions shall be sealed with a catalyzed resin compatible with the original resin as recommended by the manufacturer. The sealing of edges shall prevent pre-mature fraying at the cut edges.

D. Install items specified as indicated and in accordance with manufacturer's instructions.

3.2 TOLERANCES

A. Tank fabrication, erection, and foundation tolerances shall be in accordance with ASTM D3299.

B. Tank nozzles (excluding manways) shall be installed within the following tolerances:

1. Projection from Outside of Tank Shell to Extreme Face of Flange: 3/16-inch.
2. Flange Bolt Hole Orientation: ±1/16-inch.

C. Tank manholes shall be installed within the following tolerances:
1. Projection from Outside of Tank Shell to Extreme Face of Flange: 1/2-inch.
2. Flange Tilt in Any Plane, Measured Across the Flange Diameter: 1/2-inch.

3.3 INSPECTIONS AND TESTS

A. Thoroughly broom sweep or wash clean inside of each tank.

B. Testing: Tanks shall be tested in accordance with ASTM D3299. Any tank showing evidence of leakage during test must be emptied immediately. The source of leakage must be determined and the defect repaired prior to refilling.

C. Retain, label and submit cut-out samples of all FRP vessels to the ENGINEER for assessment of properties and laminate construction.

++ END OF SECTION ++

SECTION 13300

METAL BUILDING SYSTEMS

PART 1 - GENERAL

1.1 SECTION INCLUDES

A. Manufacturer-engineered, shop-fabricated structural steel building frame.

B. Metal wall and roof panels including closure trim, gutters and downspouts.

1.2 REFERENCE STANDARDS

A. AISC 360 - Specification for Structural Steel Buildings; 2010.

B. ASTM A153/A153M - Standard Specification for Zinc Coating (Hot-Dip) on Iron and Steel Hardware; 2016a.

C. ASTM A307 - Standard Specification for Carbon Steel Bolts, Studs, and Threaded Rod 60 000 PSI Tensile Strength; 2014.

D. ASTM A500/A500M - Standard Specification for Cold-Formed Welded and Seamless Carbon Steel Structural Tubing in Rounds and Shapes; 2018.

E. ASTM A501/A501M - Standard Specification for Hot-Formed Welded and Seamless Carbon Steel Structural Tubing; 2014.

F. ASTM A529/A529M - Standard Specification for High-Strength Carbon-Manganese Steel of Structural Quality; 2014.

G. ASTM A572/A572M - Standard Specification for High-Strength Low-Alloy Columbium-Vanadium Structural Steel; 2018.

H. ASTM A792/A792M - Standard Specification for Steel Sheet, 55% Aluminum-Zinc Alloy-Coated by the Hot-Dip Process; 2010 (Reapproved 2015).

I. ASTM C991 - Standard Specification for Flexible Fibrous Glass Insulation for Metal Buildings; 2016.

J. ASTM C1107/C1107M - Standard Specification for Packaged Dry, Hydraulic-Cement Grout (Nonshrink); 2014a.

K. ASTM F3125/F3125M - Standard Specification for High Strength Structural Bolts and Assemblies, Steel and Alloy Steel, Heat Treated, Inch Dimensions 120 ksi and 150 ksi Minimum Tensile Strength, and Metric Dimensions 830 MPa and 1040 MPa Minimum Tensile Strength; 2019.

L. AWS A2.4 - Standard Symbols for Welding, Brazing, and Nondestructive Examination; 2012.

M. AWS D1.1/D1.1M - Structural Welding Code - Steel; 2015 (with March 2016 Errata).

N. MBMA (MBSM) - Metal Building Systems Manual; 2012.

O. SSPC-Paint 20 - Zinc-Rich Primers (Type I, "Inorganic," and Type II, "Organic"); 2002 (Ed. 2004).

1.3 ADMINISTRATIVE REQUIREMENTS

A. Preinstallation Meeting: Convene one week before starting work of this section.

1.4 SUBMITTALS

A. Product Data: Provide data on profiles, component dimensions, fasteners.

B. Shop Drawings: Indicate assembly dimensions, locations of structural members, connections; wall and roof system dimensions, panel layout, general construction details, anchors and methods of anchorage, and installation; framing anchor bolt settings, sizes, locations from datum, and foundation loads; indicate welded connections with AWS A2.4 welding symbols; indicate net weld lengths; provide professional seal and signature.

C. Shop Drawings: Submit for approval the following:
   1. A copy of this specification section, with addendum updates included, and all referenced and applicable sections, with addendum updates included, with each paragraph check-marked to indicate specification compliance or marked to indicate requested deviations from specification requirements. Check marks (✓) shall denote full compliance with a paragraph as a whole. If deviations from the specifications are indicated, and therefore requested by the CONTRACTOR, each deviation shall be underlined and denoted by a number in the margin to the right of the identified paragraph, referenced to a detailed written explanation of the reasons for requesting the deviation. The ENGINEER shall be the final authority for determining acceptability of requested deviations. The CONTRACTOR shall furnish equipment and/or services as specified if an exception and/or deviation is rejected. The remaining portions of the paragraph not underlined will signify compliance on the part of the CONTRACTOR with the specifications. Failure to include a copy of the marked-up specification sections, along with justification(s) for any requested deviations to the specification requirements, with the submittal shall be sufficient cause for rejection of the entire submittal with no further consideration.
   2. The CONTRACTOR shall submit the preventive maintenance information package as part of the shop drawing submittal package to the ENGINEER for

review and approval. **SHOP DRAWING SUBMITTAL PACKAGE WILL NOT BE APPROVED WITHOUT ACCEPTANCE OF PREVENTIVE MAINTENANCE INFORMATION.**

D. Samples: Submit two samples of precoated metal panels for each color selected, __6__by__6__ inch (__152.4__by__152.4__ mm) in size illustrating color and texture of finish.

E. Project Record Documents: Record actual locations of concealed components and utilities.

1.5 QUALITY ASSURANCE

1. Designer Qualifications: Design structural components, develop shop drawings, and perform shop and site work under direct supervision of a Professional Structural Engineer experienced in design of this type of work.
2. Design Engineer Qualifications: Licensed in the State in which the Project is located.
3. Comply with applicable code for submission of design calculations as required for acquiring permits.
4. Cooperate with regulatory agency or authorities having jurisdiction (AHJ), and provide data as requested.

B. Perform work in accordance with AISC 360 - Specification for Structural Steel Buildings and MBMA (MBSM).

C. Perform welding in accordance with AWS D1.1/D1.1M.

D. Manufacturer Qualifications: Company specializing in the manufacture of products similar to those required for this project.

1.6 WARRANTY

A. See Section 01700 - Contract Closeout, for additional warranty requirements.

B. Correct defective Work within a five year period after Date of Substantial Completion.

C. Provide 35 year manufacturer warranty for high performance coatings.
1. Include coverage for exterior pre-finished surfaces to cover pre-finished color coat against chipping, cracking or crazing, blistering, peeling, chalking, or fading. Include coverage for weather tightness of building enclosure elements after installation.

PART 2 - PRODUCTS

2.1 MANUFACTURERS

A. Metal Buildings Systems:
   1. Subject to Contractor coordination of required detail modifications compared to those indicated in drawings.

2.2 ASSEMBLIES

A. Single span rigid frame.

B. Primary Framing: Rigid frame of rafter beams and columns, and wind bracing.

C. Secondary Framing: Purlins, girts, and other items detailed.

D. Variation from the structural layouts, clearances, and spacings indicated on drawings, including addition of elements such as portal frames or additional bracing, may be allowable but are considered a substitution subject to review and approval.

2.3 PERFORMANCE REQUIREMENTS

A. Installed Thermal Resistance of Wall System: R-value of 19 (RSI-value of 3.35).

B. Installed Thermal Resistance of Roof System: R-value of 30 (RSI-value of 5.3).

C. Design structural members to withstand dead load, and design loads due to pressure and suction of wind calculated in accordance with applicable code.

D. Provide drainage to exterior for water entering or condensation occurring within wall or roof system.

E. Permit movement of components without buckling, failure of joint seals, undue stress on fasteners or other detrimental effects, when subject to temperature range of 100 degrees F (56 degrees C).

F. Size and fabricate wall and roof systems free of distortion or defects detrimental to appearance or performance.

2.4 MATERIALS - FRAMING

A. Hot Rolled Structural Steel : ASTM A653/A653M, Grade 55.

B. Cold formed steel framing: ASTM A1003.

C. Anchor Bolts: ASTM A307, Grade A, with hot dip type for protective coatings.

D. Bolts, Nuts, and Washers: ASTM F3125/F3125M, Type 1; galvanized to ASTM A153/A153M.

E. Welding Materials: Perform in accordance with AWS D1.1/D1.1M.

F. Primer: SSPC-Paint 20, zinc rich.

2.5 MATERIALS - WALLS AND ROOF

A. Steel Sheet: ASTM A792/A792M aluminum-zinc alloy coated to AZ50/AZM150.

B. Insulation: ASTM C991 Type I; 6-3/8 inches (162 mm) thick at walls, 9-1/4 inches (235 mm) thick at roofs.
   1. Facing: Sheet vinyl, 0.0032 inch (0.081 mm) thick, white.

C. Joint Seal Gaskets: Manufacturer's standard type.

D. Fasteners: Manufacturer's standard type, galvanized to comply with requirements of ASTM A153/A153M, finish to match adjacent surfaces when exterior exposed.

E. Sealant: Manufacturer's standard type.

F. Metal Mesh: Galvanized steel wire, woven.

G. Trim, Closure Pieces, Caps, Flashings, Gutters, Downspouts, Facias: Same material, thickness and finish as exterior sheets; brake formed to required profiles.

2.6 COMPONENTS

A. Doors and Frames: Specified in Division 8, Doors and Windows.

B. Overhead Doors: Specified in Division 8, Doors and Windows.

C. Overhead Door Frame: Formed steel sections braced to building frame specified in Specified in Division 8, Doors and Windows.

2.7 FABRICATION - FRAMING

A. Fabricate members in accordance with AISC 360 for plate, bar, tube, or rolled structural shapes.

B. Anchor Bolts: Formed with bent shank, assembled with template for casting into concrete.

2.8 FABRICATION - WALL AND ROOF PANELS

A. Siding: Minimum.0179 inch (.454 mm) (26 gauge) metal thickness, "PBR" profile , 1-1/4 inch (32 mm) deep, lapped edges fitted with continuous gaskets.

B. Roofing: Minimum.0179 inch (.454 mm) (26 gauge) metal thickness, "PBR" profile, lapped edges fitted with continuous gaskets.

C. Liner: Minimum [.0149] inch ([.378] mm) (28 gauge) metal thickness, manufacturer standard profile, lapped edges .

D. Girts/Purlins: Rolled formed structural shape to receive siding, roofing and liner sheet.

E. Internal and External Corners: Same material thickness and finish as adjacent material, profile brake formed to required angles. Back brace mitered internal corners with .0179 inch (.454 mm) (26 gauge) thick sheet.

F. Flashings, Closure Pieces, Fascia: Same material and finish as adjacent material, profile formed as detailed.

G. Fasteners: To maintain load requirements and weather tight installation, same finish as cladding, non-corrosive type.

2.9 FABRICATION - GUTTERS AND DOWNSPOUTS

A. Fabricate of same material and finish as roofing metal.

B. Form gutters and downspouts and scuppers of square profile and size indicated to collect and remove water. Fabricate with connection pieces.

C. Form sections in maximum possible lengths. Hem exposed edges.

D. Fabricate support straps of same material and finish as roofing metal, color as selected.

2.10 FINISHES

A. Framing Members: Clean, prepare, and shop prime.

B. Exterior Surfaces of Wall Components and Accessories: Precoated enamel on steel of modified silicone finish, color as selected from manufacturer's standard range.

C. Interior Surfaces of Wall Components and Accessories: Precoated enamel on steel of modified silicone finish, white color.

PART 3 - EXECUTION

3.1 EXAMINATION

A. Verify that foundation, floor slab, mechanical and electrical utilities, and placed anchors are in correct position

3.2 ERECTION - FRAMING

A. Erect framing in accordance with AISC 360.

B. Provide for erection and wind loads. Provide temporary bracing to maintain structure plumb and in alignment until completion of erection and installation of permanent bracing. Locate braced bays as indicated.

C. Set column base plates with non-shrink grout to achieve full plate bearing.

D. Do not field cut or alter structural members without approval.

E. After erection, prime welds, abrasions, and surfaces not shop primed.

3.3 ERECTION - WALL AND ROOF PANELS

A. Install in accordance with manufacturer's instructions.

B. Exercise care when cutting prefinished material to ensure cuttings do not remain on finish surface.

C. Fasten cladding system to structural supports, aligned level and plumb.

D. Locate end laps over supports. End laps minimum 2 inches (50 mm). Place side laps over bearing.

E. Provide expansion joints where indicated.

F. Use concealed fasteners.

G. Install insulation and vapor retarder utilizing panels for attachment. Place wire mesh under vapor retarder for support between framing members.

H. Install sealant and gaskets, providing weather tight installation.

3.4 ERECTION - GUTTERS AND DOWNSPOUTS

A. Rigidly support and secure components. Join lengths with formed seams sealed watertight. Flash and seal gutters to downspouts.

B. Slope gutters minimum 1/8 inch/ft (10 mm/m).

C. Install splash pads under each downspout.

3.5 ERECTION - SKYLIGHTS

A. Install in accordance with manufacturer's instructions.

B. Coordinate with installation of roofing system and related flashings.

C. Seal between skylight units and roof system, providing weather tight installation.

3.6 TOLERANCES

A. Framing Members: 1/4 inch (6 mm) from level; 1/8 inch (3 mm) from plumb.

B. Siding and Roofing: 1/8 inch (3 mm) from true position.

++ END OF SECTION ++

SECTION 13447

ELECTRIC MOTOR ACTUATORS

PART 1 - GENERAL

1.1 SUMMARY

A. Section includes: Electric motor-driven actuators for valves and gates as identified in the valves and gate schedule as MOV or EDR (Electric Discrete Run Open / Run Close Valve Actuator), except for specialty actuators specified with individual valves.

B. Related sections:
   1. The Contract Documents are complementary; what is called for by one is as binding as if called for by all.
   2. It is the Contractor's responsibility for scheduling and coordinating the Work of subcontractors, suppliers, and other individuals or entities performing or furnishing any of Contractor's Work.
   3. The following Sections are related to the Work described in this Section. This list of Related Sections is provided for convenience only and is not intended to excuse or otherwise diminish the duty of the Contractor to see that the completed Work complies accurately with the Contract Documents.
      a. Section 11285 - Hydraulic Gates.
      b. Section 11295 - Hydraulic Valves.
      c. Section 16225 - Electric Motors 250 Horsepower or Less.
      d. Section 09900 - Painting.

1.2 REFERENCES

A. American Water Works Association (AWWA):
   1. AWWA C504 - Rubber-Seated Butterfly Valves.
   2. AWWA C542 - Electric Motor Actuators for Valves and Slide Gates.

B. FM Global (FM).

C. National Electrical Manufacturers Association (NEMA):
   1. MG-1 Standard for Electrical motors.

D. Underwriters Laboratories (UL) - UL 674, UL 1004.

1.3 DEFINITIONS

A. NEMA:
   1. Type 4X enclosure in accordance with NEMA 250.
   2. Type 7 enclosure in accordance with NEMA 250.

1.4 SUBMITTALS

A. Product data:
   1. Electrical ratings:
      a. Voltage and number of phases.
      b. Starting and running current.
      c. Voltage levels and source for control and status.
   2. Description of integral control interface.
   3. Integral and remote control station components.
   4. Environmental ratings, including NEMA enclosure rating and submergence capabilities.
   5. Gear ratios for both manual and motorized actuation.
   6. Opening and closing directions.
   7. Allowable starts per hour.
   8. List of all included options and accessories.
   9. Full travel times.
   10. Gearbox data including gear ratio, and gearbox efficiency.
   11. Affidavit in accordance with AWWA C542.

B. Shop drawings:
   1. Wiring diagrams:
      a. Include all options and expansion cards furnished with each actuator.
   2. Dimensioned drawings of each valve and actuator combination.
   3. Dimensioned drawings of each valve gearbox.
   4. Electric motor data.

C. Calculations: Submit the following for each valve/gate size and class:
   1. Operating torque calculations.
   2. Maximum torque calculations for seating and unseating.
   3. Maximum operating torque at starting and normal operation.
   4. Indicate factor of safety for all torque calculations.

D. Test reports:
   1. Factory test report and certificate.

E. Manufacturer's instructions:
   1. Include manufacturer's instructions, description of system operation, start-up data and troubleshooting check lists.

F. Operations and maintenance data:
   1. Include manufacturer's literature; cleaning procedures, replacement part lists, wiring diagrams, and repair data.
   2. Include a list of all configurable parameters, and the final values for each.
   3. List of recommended spare parts.
   4. List of special tools necessary for proper operation and/or maintenance.
   5. Exploded view drawings that illustrate all assemblies, sub-assemblies, and components.

6. Routine test procedures for all electronic and electrical circuits.
7. Troubleshooting chart covering the complete valve and controls/electrical power systems, showing description of trouble, probable cause, and suggested remedy.
8. Certified factory and field-test results.

G. A copy of this specification section, with addendum updates included, and all referenced and applicable sections, with addendum updates included, with each paragraph check-marked to indicate specification compliance or marked to indicate requested deviations from specification requirements. Check marks (✓) shall denote full compliance with a paragraph as a whole. If deviations from the specifications are indicated, and therefore requested by the CONTRACTOR, each deviation shall be underlined and denoted by a number in the margin to the right of the identified paragraph, referenced to a detailed written explanation of the reasons for requesting the deviation. The ENGINEER shall be the final authority for determining acceptability of requested deviations. The CONTRACTOR shall furnish equipment and/or services as specified if an exception and/or deviation is rejected. The remaining portions of the paragraph not underlined will signify compliance on the part of the CONTRACTOR with the specifications. Failure to include a copy of the marked-up specification sections, along with justification(s) for any requested deviations to the specification requirements, with the submittal shall be sufficient cause for rejection of the entire submittal with no further consideration.

H. The CONTRACTOR shall submit the preventive maintenance information package as part of the shop drawing submittal package to the ENGINEER for review and approval. **SHOP DRAWING SUBMITTAL PACKAGE WILL NOT BE APPROVED WITHOUT ACCEPTANCE OF PREVENTIVE MAINTENANCE INFORMATION.**

1.5 QUALITY ASSURANCE

A. Obtain required information from the valve/gate supplier, including but not limited to:
1. Interface to gate or valve.
2. Operating range:
   a. Quarter turn or multi-turn.
   b. Required turns for full travel on multi-turn applications.
3. Direction of rotation for opening and closing.
4. Maximum and normal torque requirements.

B. All motorized, intelligent actuators shall be the product of a single manufacturer for all valve and gate applications on this project, regardless of gate or valve type, manufacturer, or supplier.

1.6 WARRANTY

A. Refer to Contract Document 01010 – Summary of Work.

1.7 SPARE PARTS

A. Provide the following spare parts (minimum 10 percent of total number of actuators of each model type furnished, but not less than 1 for each model of actuator furnished):
   1. Stem nut.
   2. Worm shaft subassembly.
   3. Drive sleeve subassembly.
   4. Complete actuator seal kit.
   5. Actuator gearbox oil (sufficient quantity to fill 4 gearboxes).
   6. Encoder.
   7. Control module.

B. Provide 1 spare motor for each size motor furnished.

PART 2 - PRODUCTS

2.1 MANUFACTURERS

A. Acceptable manufacturers for lines 3 inches and smaller:
   1. RCI:
      a. RCEL-005L, with Receptacle (quarter-turn)
   2. Hayward:
      a. Series EJM (quarter-turn).
   3. Rotork:
      a. ROM Series (quarter turn).
   4. Rotork:
      CVA Series (multi- turn).

B. Acceptable Manufacturers for lines 4 inches and larger, and actuated gates:
   1. Rotork Controls, Inc.:
      a. IQ (multi-turn).
      b. IQT (quarter-turn).
   2. Limitorque Corporation:
      a. Accutronix MX (multi-turn).
      b. Accutronix QkX (quarter-turn).
   3. Or equal from EIM Corporation.

2.2 MANUFACTURED UNITS

A. Actuators for valves 3 inches and smaller:

1. Provide actuators complete and operable with all components and accessories required for operation.
2. Power supply:
    a. 120 VAC.
    b. Valve motion independent of power supply phase rotation.
3. Size actuator to move valves from full open to closed position within the time indicated in the Motorized Actuator Schedule:
    a. If an operating time is not indicated on the Schedule, size the actuator to move valves at minimum 12 inches per minute under maximum load. Measure rate of closure for valves at maximum diameter of disc, plug, or ball.
4. Control inputs:
    a. Capable of using discrete 120 VAC and 24VDC inputs, as shown on DRAWINGS.
    b. Isolated inputs capable of operating from external control voltage source
    c. Provide for the following control inputs:
        1) OPEN.
        2) CLOSE.
5. Status outputs:
    a. Dry contact outputs configured for the functions indicated on the Drawings. Provide the following outputs for all actuators:
        1) FULLY CLOSED.
        2) FULLY OPEN.
    b. All output contacts rated for minimum 3 amps, 120 VAC.
6. Analog input:
    a. Provide a 4-20 milliamp analog input for analog modulating valves when indicated on the Drawings.
    b. Modulate valve to maintain position based on analog input value.
    c. Maximum input impedance 250 ohms.
7. Analog output:
    a. Provide an isolated 4-20 milliamp analog output when indicated on the Drawings.
8. Materials:
    a. Construct motorized actuators of materials suitable for the environment in which the valve or gate is to be installed.
9. Components:
    a. Motors:
        1) Specifically designed for valve actuator service with high starting torque, totally enclosed non-ventilated construction.
        2) Torque ratings equal to or greater than that required for valve seating and dynamic torques with a 25 percent factor of safety.
        3) Rated for operating under the following conditions without exceeding temperature limits with ambient temperature of 40 degrees Celsius.
            a) Continuous operation for 15 minutes or twice the open-to-close operating time (whichever is greater) at normal operating

torque or 33 percent of maximum torque (whichever is greater).

b) 60 starts per hour for open/close service or 1,200 starts per hour for modulating service.

b. Enclosures:
   1) Actuator housing ratings as indicated in the Motorized Actuator Schedule.
   2) Stainless steel external fasteners.
   3) Provide the following minimum enclosure ratings:
      a) NEMA Type 4X for outdoor, wet or corrosive area applications.
      b) NEMA Type 7 certified by FM for Class I, Division 1, Groups C, D, E, F and G, for actuators installed in Class I, Division 1 and 2 areas.

c. Manual Override:
   1) Allen key operation.

d. Gearing: Hardened alloy steel spur or helical gears and self-locking, alloy bronze worm gear set:
   1) Accurately cut to assure minimum backlash.

e. Bearings:
   1) Anti-friction bearing with caged balls or rollers throughout.
   2) Sealed-for-life type thrust bearings housed in a separate thrust base.

f. Drive bushing:
   1) Easily detachable for machining to suit the valve stem or gearbox input shaft.
   2) Positioned in a detachable base of the actuator.

B. Actuators for valves 4 inch and larger, and actuated gates:
   1. Provide actuators complete and operable with all components and accessories required for operation.
   2. Power supply:
      a. Voltage and phases as indicated on the DRAWINGS and/or Valve and Gate Actuator Schedule.
      b. Valve or gate motion independent of power supply phase rotation.
   3. Size actuator to move gates or valves from full open to closed position within the time indicated in the Valve and Gate Actuator Schedule:
      a. If an operating time is not indicated on the Schedule, size the actuator to move gates or valves at minimum 12 inches per minute under maximum load.
      b. Measure rate of closure for valves at maximum diameter of disc, plug, or ball.
   4. Control interface:
      a. Configuration:
         1) Provide a non-intrusive, non-contacting interface for configuring all input and output settings, control values, ranges, torque switch settings, valve positions switch settings, and options.

a) Configurable from a hand-held configuring tool or input devices on the actuator.

b. Local interface, integral to actuator:
   1) Selector switches:
      a) Local-Off-Remote:
         i. Motor actuator operation is prevented with the switch in OFF.
      b) Open-Close:
         i. Controls the valve when Local-OFF-Remote is in LOCAL.
         ii. Spring return to center.
         iii. Configurable between maintained (actuator runs until end of travel, high torque, or a local-stop-remote is switched to STOP) and momentary (actuator stops when lever is released).

c. Control inputs:
   1) Capable of using 120 VAC or 24 VDC inputs, as shown on DRAWINGS.
   2) Controls the valve when Local-OFF-Remote is in REMOTE.
   3) Isolated inputs capable of operating from external control voltage source or internal power supply:
      a) Furnish control power supplies within the actuator.
   4) Provide the following inputs:
      a) OPEN.
      b) CLOSE.
      c) OFF.
      d) OPEN and CLOSE inputs configurable between maintained (actuator runs until end of travel, high torque, or a OFF input) and momentary (actuator stops when command is removed).

d. Status outputs:
   1) Monitor relay output: Dry contact, normally closed, opens when actuator is not in REMOTE or in the event of any internal fault or alarm condition.
   2) Dry contact outputs configured for the functions indicated on the Drawings. Provide the following outputs for all actuators:
      a) FULLY CLOSED.
      b) FULLY OPEN.
      c) Local-Off-Remote in REMOTE position.
   3) All output contacts rated for 5 amps, 120 VAC and 24 VDC.

e. Analog input:
   1) Provide a 4-20 milliampere analog input for analog modulating valves when indicated on the Drawings.
   2) Modulate valve to maintain position based on analog input value.
   3) Maximum input impedance 250 ohms.

f. Analog output(s):

1) Provide an isolated 4-20 milliampere analog outputs when indicated on the Drawings:
    a) Loop power sourced from the actuator power supply.
    b) Capable of driving into a load up to 500 ohms.
    c) Output proportional to process value(s) indicated on the Drawings.
    d) Valve or gate position.
    e) Operating torque.

2.3 FEATURES

A. Time delay on reversal: Incorporate time delay between stopping actuator and starting in opposite direction to limit excessive current, torque, and heating from instantaneous reversal.

2.4 MATERIALS

A. Construct motorized actuators of materials suitable for the environment in which the valve or gate is to be installed.

2.5 COMPONENTS

A. Motors:
    1. Specifically designed for valve actuator service with high starting torque, totally enclosed non-ventilated construction.
    2. Torque ratings equal to or greater than that required for valve seating and dynamic torques with a minimum of 25 percent factor of safety:
        a. Design requirements for rubber-seated AWWA butterfly valves:
            1) Design valves and actuators for maximum operating torque, in accordance with and using safety factors required in AWWA C504 and AWWA C542:
                a) Valve actuator torque requirement for open-close service: Not less than the required valve-seating and dynamic torques under design operating conditions in accordance with AWWA C504.
                b) Valve actuator torque requirement for modulating service: Not less than twice the required valve dynamic torque under design operating conditions in accordance with AWWA C504.
        b. Design requirements for slide gates, gate valves, knife gate valves, globe valves, and diaphragm valves:
            1) Design valves and actuators for maximum operating torque, in accordance with and using safety factors required in AWWA C542.
            2) Design for the maximum torque and thrust running load over the full cycle.
            3) Maximum torque or thrust rating: The actuator stall torque or maximum thrust output shall not exceed the torque or thrust capability of the valve or gate, as determined by the valve or gate manufacturer.

3. Capable of being removed and replaced without draining the actuator gear case.
4. Motor bearings shall be amply proportioned of the anti-friction type and permanently lubricated.
5. Rated for operating under the following conditions without exceeding temperature limits with ambient temperature of 40 degrees Celsius:
    a. Continuous operation for 15 minutes or twice the open-to-close operating time (whichever is greater) at normal operating torque or 33 percent of maximum torque (whichever is greater).
    b. 60 starts per hour for open/close service or 1,200 starts per hour for modulating service.
6. Provide the following motor protection features:
    a. Jammed valve (no valve motion detected through a time delay).
    b. High motor temperature (sensed by embedded thermostats).
    c. High torque.
    d. Single phasing protection for 3-phase motors.

B. Enclosures:
1. Actuator housing ratings as indicated in the Valve and Gate Actuator Schedule.
2. Stainless steel external fasteners.
3. Provide seals for each of the following areas:
    a. Between the terminal compartment and the internal electrical elements.
    b. Between the mechanical and electrical portions to protect from the ingress of oil, and to protect the mechanical components of oil from dust and moisture when the electrical terminal is open.
4. Provide the following minimum enclosure ratings:
    a. NEMA Type 4X for general applications.

C. Position sensing:
1. Integral with valve actuator.
2. Gearing: Intermittent type; bronze or stainless steel; grease lubricated; totally enclosed.
3. Contacts: Heavy duty and silver-plated with wiping action or encoder wheel.
    a. Remote indication contacts: As indicated on the Drawings.

4. Switches: Adjustable; allowing for trip points from fully open to closed positions of valve travel; not subject to breakage or slippage due to over travel; permits visible verification of switch position without disassembly.
5. Capable of retaining position and monitoring valve or gate motion when valve is manually actuated and when main power is not present.
6. Valve range and position switch outputs field adjustable.

D. Torque sensing:
1. Capable of interrupting control circuit in both opening and closing when valve torque overload occurs.

2. Silver-plated contacts.
3. Graduated dials for both open and close directions of travel, each independently adjustable or 0-100 LTD display.
4. Positive means to limit adjustability to avoid exceeding actuator output torque capability with solid-state sensor embedded within the torque transducer.
5. Permits visible verification of switch position without disassembly.
6. Torque shutdown setting: 40 percent to 100 percent rated torque:
   a. Adjustable in 1 percent increments.
7. Capable of interrupting control circuit during both opening and closing and when valve torque overload occurs.
8. Independent of variations in frequency, voltage, or temperature.
9. Provide a temporary inhibit of the torque sensing system during unseating or during starting in mid-travel against high inertia loads.

E. Manual actuators:
   1. Hand wheel for manual operation:
      a. Maximum 80-pound pull on rim when operating gate or valve under maximum load.
      b. Provide pull chain when motorized actuator is located more than 6 feet above floor surface.
         1) Chain shall be of sufficient length to reach approximately 4 feet above the operating level.
         2) Where the chain obstructs an aisle or walkway, provide holdback or other means to ensure chain does not create a nuisance or hazard to operating personnel.
   2. Declutch lever: With padlock, capable of mechanically disengaging motor and related gearing and freeing hand wheel for manual operation.

F. Gearing: Hardened alloy steel spur or helical gears and self-locking, alloy bronze worm gear set:
   1. Accurately cut to assure minimum backlash.

G. Bearings:
   1. Anti-friction bearing with caged balls or rollers throughout.
   2. Sealed-for-life type thrust bearings housed in a separate thrust base.

H. Drive bushing:
   1. Easily detachable for machining to suit the valve stem or gearbox input shaft.
   2. Positioned in a detachable base of the actuator.

I. Lubrication:
   1. Provide totally enclosed actuator gearing with oil filled gear case suitable for operation at any angle.
      a. Suitable for standard SAE80EP gear oil.
   2. Actuators requiring special or exotic lubricants are not acceptable.

3. Provide seals for all shafts.

2.6 ACCESSORIES

A. Setting tool:
   1. If required for setting or configuring the actuator, provide a hand-held setting tool.
      a. Furnish 1 setting tool for every 10 actuators.
      b. Capable of communicating with PC-based configuration software, and transferring the following in either direction between the computer and programmer and setting tool, and between the setting tool and actuator.
      c. Actuator configurations:
         1) Capable or storing up to ten different configurations.
      d. Diagnostic data.
         1) Capable of storing 4 complete sets of diagnostic data.

2.7 SOURCE QUALITY CONTROL

A. Factory test:
   1. Test each actuator in the factory, and submit an individual test certificate for each actuator.
   2. Perform a high potential test and record the following information:
      a. Test voltage.
   3. Simulate a maximum and typical valve loads and record the following information:
      a. Current and power factor at maximum and set torque values.
      b. Torque as measured by the actuator.
      c. Actuator output speed or operating time.
   4. Performance testing: Conduct performance test for each actuator simulating valve operating torque from full-open to full-close and from full-close to full-open. The following information shall be recorded during each performance test:
      a. Torque at maximum torque setting.
      b. Current at maximum torque setting.
      c. Test voltage and frequency.
      d. Actuator output speed and operating time for full-open to full-close.
      e. Amperage draw on motors at breakaway and under normal operation.

PART 3 - EXECUTION

3.1 INSTALLATION

A. Install actuators in accordance with manufacturer's instructions.

3.2 MOTORIZED ACTUATOR SCHEDULE

A. Provide all actuators required by the Drawings. Major process actuators are listed in the Valve and Gate Actuator Schedule. The schedule does not include all number and types of actuators required for the Project.

B. Abbreviations relating to type:
   1. BFV = Butterfly Valve.
   2. BV = Ball Valve.
   3. SG = Slide Gate.
   4. SV = Solenoid Valve

C. Abbreviations relating to actuator type:
   1. O/C = Open and Close Service.

D. Abbreviations relating to controls:
   1. MB = Modbus RTU (RS-485).
   2. NET = Manufacturer's proprietary network.
   3. A = Analog (4-20 mA) control, modulating duty.
   4. D = Discrete control, modulating duty.
   5. D-O/C = Discrete Open/Close.

(The remainder of this page left intentionally blank).

VALVE ACTUATOR SCHEDULE									
Equipment Number	**Location**	**Reference DWG**	**Type**	**Size**	**Actuator Type**	**NEMA Rating**	**Voltage**	**Open Time**	**Controls**
RWIF									
EDR-RW-XXX	RAW WATER PUMP STATION INLET SLIDE GATE	I-1.01	SG	24”W X 24”H	O/C	4	480/3/60	TBD	TBD
PLV-XXX	SELF-CLEANING STRAINER NO. 1 DRAIN PIPE	I-1.03	BV	2”	O/C	TBD	120/1/60	TBD	TBD
PLV-XXX	SELF-CLEANING STRAINER NO. 2 DRAIN PIPE	I-1.03	BV	2”	O/C	TBD	120/1/60	TBD	TBD
PLV-XXX	SELF-CLEANING STRAINER NO. 3 DRAIN PIPE	I-1.03	BV	2”	O/C	TBD	120/1/60	TBD	TBD
SV-XXX	AIR COMPRESSOR NO.1 DRAIN PIPE	I-1.19	SV	½”	O/C	4	120/1/60	TBD	TBD
SV-XXX	AIR COMPRESSOR NO.2 DRAIN PIPE	I-1.19	SV	½”	O/C	4	120/1/60	TBD	TBD
BAV-XXX	MFS SODIUM HYPOCHLROTIE STORAGE TANK FEED LINE	I-2.01	BFV	2”	O/C	TBD	TBD	TBD	TBD

++ END OF SECTION ++

SECTION 13446

FLOOR SCALE AND INSTRUMENTS

PART 1 - GENERAL

1.1 SUMMARY

A. Section includes:
   1. Weight instruments used to measure weight of chemical tote bins on concrete pad.
   2. Mounting hardware for indicators and load cells.

B. National Electrical Manufacturers Association (NEMA):
   1. 250 - Enclosures for Electrical Equipment (1000 V Maximum).

1.2 REFERENCES

A. National Institute of Standards and Technology (NIST):
   1. Handbook 44: Specifications, Tolerances and Other Technical Requirements for Weighing and Measuring Devices.

1.3 DEFINITIONS

A. NEMA:
   1. Type 4X enclosure in accordance with NEMA 250.

1.4 SUBMITTALS

A. Submit for approval the following:
   1. Product data:
      a. Manufacturer.
      b. Model Number.
      c. Materials
      d. Rated capacity and rated conditions.
      e. Accuracy.
   2. Shop drawings: Include the following:
      a. Dimensioned Drawings certified for construction,
      b. Foundation and support requirements and anchor bolt setting plans,
      c. Installation instructions.
      d. Connection diagram,
      e. Loop diagram,
   3. A copy of this specification section, with addendum updates included, and all referenced and applicable sections, with addendum updates included, with each paragraph check-marked to indicate specification compliance or marked to indicate requested deviations from specification requirements. Check marks

(✓) shall denote full compliance with a paragraph as a whole. If deviations from the specifications are indicated, and therefore requested by the CONTRACTOR, each deviation shall be underlined and denoted by a number in the margin to the right of the identified paragraph, referenced to a detailed written explanation of the reasons for requesting the deviation. The ENGINEER shall be the final authority for determining acceptability of requested deviations. The CONTRACTOR shall furnish equipment and/or services as specified if an exception and/or deviation is rejected. The remaining portions of the paragraph not underlined will signify compliance on the part of the CONTRACTOR with the specifications. Failure to include a copy of the marked-up specification sections, along with justification(s) for any requested deviations to the specification requirements, with the submittal shall be sufficient cause for rejection of the entire submittal with no further consideration.

4. The CONTRACTOR shall submit the preventive maintenance information package as part of the shop drawing submittal package to the ENGINEER for review and approval. **SHOP DRAWING SUBMITTAL PACKAGE WILL NOT BE APPROVED WITHOUT ACCEPTANCE OF PREVENTIVE MAINTENANCE INFORMATION.**

1.5 QUALITY ASSURANCE

A. Test reports:
   1. Factory test report and certificate.

B. Certificates:
   1. Certified calibration data meeting NIST Handbook 44, as applicable to commercial weighing.
   2. National Type Evaluation Program Certificate of Conformance.

C. Manufacturer's instructions:
   1. Include manufacturer's instructions of installation including mounting details, description of system operation, start-up data and troubleshooting check lists.

D. Operations and maintenance data:
   1. Include manufacturer's literature; cleaning procedures, replacement part lists, wiring diagrams, and repair data.
   2. Include a list of all configurable parameters, and the final values for each.
   3. List of recommended spare parts.
   4. List of special tools necessary for proper operation and/or maintenance.
   5. Exploded view drawings that illustrate all assemblies, sub-assemblies, and components.
   6. Routine test procedures for all electronic and electrical circuits.
   7. Troubleshooting chart covering the complete valve and controls/electrical power systems, showing description of trouble, probable cause, and suggested remedy.

8. Certified factory and field-test results.

E. Manufacturer qualifications: Manufacturer has minimum of 5 years of successful operation of similar scales in similar installations.

1.6 WARRANTY

A. The scale manufacturer shall warrant the units being supplied to the OWNER against defecting in workmanship and material for a period of two years after installation under normal use, operation, and service. The warranty shall cover parts and labor and shall be in printed form and apply to all similar units.

PART 2 - PRODUCTS

2.1 INTEGRATED SYSTEM OF WEIGHT SCALE. PLATFORM, AND LOAD CELL

A. Manufacturers
   1. Acceptable manufacturers:
      a. Mettler-Toledo.
      b. Or Approved Equal.

B. General Provisions
   1. Provide 1 electronic floor scale systems for the purpose of monitoring chemical solution consumption from a tote bin.
   2. Each scale shall have an overall platform size of 59 inches wide by 59 inches long by not more than 9 inches tall and shall have a gross weighing capacity of 5,000 pounds.
   3. The scale should be constructed for use in a washdown environment and shall have components suited for that environment.
   4. The scale platform and subframe assembly shall be constructed of Type 316 stainless steel or steel with Tuffcoat system.

C. Load Cells
   1. Load cells shall have the following individual characteristics:
      a. Temperature stable, rolling diaphragm type, allows 4-degree tilt of load plate without affecting scale accuracy.
      b. Rated capacity: 5,000 pounds.
      c. Temperature compensation: -10 to +40 degrees Celsius.
      d. Maximum loads:
         1) Safe: 150 percent of rated capacity.
         2) Ultimate overload: 300 percent of rated capacity.
         3) Safe side: 100 percent of rated capacity.
      e. Gauge cavity seal type: Welded hermetic gauge cover.
   2. Load cells to be constructed of 17-4 ph stainless steel and shall have a welded hermetic gauge cover over the gauge and wiring cavities.

3. Each load cell to have an integral conduit fitting on the cable entrance into the load cell for enhanced moisture protection.
4. Each load cell to have a data plate affixed to the load cell which clearly shows:
    a. Manufacturer.
    b. Capacity.
    c. Part number.
    d. Serial number.
    e. National Type Evaluation Program certificate of performance number.
    f. Class number.
    g. Maximum divisions (NMax).
    h. Load cell Vmin.

D. Floor Scale Platform
1. Scale shall have an unobstructed weighing surface, use of side rails or other similar designs is not acceptable.
2. Each scale shall have provisions for lifting the entire floor scale for periodic inspection and maintenance.
    a. The scale manufacturer shall provide a minimum of 2 threaded through hole lifting points in the floor scale for this purpose.
    b. The scale manufacturer shall also provide threaded steel plugs for each of these holes to protect the lifting points during non-use.
3. A removable access plate shall be provided in the top of the floor surface to provide access to the load cell summing junction box.
4. Scale suspension shall be of a rocker foot style design to allow ease of movement and installation.
5. Load foot assembly shall be stainless steel and be threaded to allow for adjustment to compensate for uneven floor conditions.
6. A level bubble shall be provided, visible from the top of floor.

E. Junction Box
1. 1. Scale shall have a junction box assembly mounted internally within the floor scale platform.
    a. Access to the junction box assembly shall be accomplished via removable plate in the top of the scale platform.
    b. Remote mounted, or side access junction box assemblies are not acceptable.
2. Junction box enclosure shall be constructed of Type 316 stainless steel and shall be designed to NEMA 4X standards.
3. The junction box enclosure shall have wash down duty connectors, 1 for each load cell cable, and 1 additional connector for the instrument cable.
    a. Multiple cables using single box connectors is not acceptable.
4. The junction box shall contain a printed circuit board for the purpose of individual load cell wiring termination, summing of the output signals from each load cell, trimming/balancing the load cell signals, and wiring the interface to the digital instrument.

5. The printed circuit board shall have individual connectors for each of the load cells, and the instrument interface cable.
    a. Each wire shall have a single terminal connection. Doubling up or ganging of wires to one terminal is not acceptable.
6. The summing printed circuit board shall have potentiometers, one per load cell for the electrical trimming/balancing of the load cell signals during calibration.

F. Digital display console located near the scale with integral power supply for the load cell, integral 4 to 20 milliampere transmitter with output signal proportional to the weight, and relay output (120 V, 10 amp or better rated contact) for low level alarm that will be used as an interlock to shut down the feed equipment.
1. Temperature range: 10 to 125 degrees Fahrenheit.
2. Adjustable low weight alarm relay with dry contacts for remote alarm monitoring.
3. Equipped with automatic tare.
4. Enclosure: NEMA 4X, stainless steel.
5. Power supply: 120 volts alternating current.
6. Weight indicating display.
7. Provides Type 316 stainless steel instrument column.

PART 3 - EXECUTION

3.1 INSTALLATION

A. Install in accordance with manufacturer's recommendations.

B. Provide field service by the scale manufacturer who shall perform final calibration and certify the scale to an accuracy of, or better than, that required by NIST, Handbook 44, as applicable to commercial weighing.

END OF SECTION

SECTION 13930

WET PIPE FIRE EXTINGUISHING SYSTEM

PART 1 - GENERAL

1.1 SUMMARY

A. Section includes: Wet pipe fire extinguishing system.

B. Related sections:
   1. The Contract Documents are complementary; what is called for by one is as binding as if called for by all.
   2. It is the CONTRACTOR's responsibility for scheduling and coordinating the Work of subcontractors, suppliers, and other individuals or entities performing or furnishing any of CONTRACTOR's Work.
   3. The following Sections are related to the Work described in this Section. This list of Related Sections is provided for convenience only and is not intended to excuse or otherwise diminish the duty of the CONTRACTOR to see that the completed Work complies accurately with the Contract Documents.
      a. Section 01300, Submittals.
      b. Section 15140, Supports and Anchors
      c. Section 15400, Plumbing Fixtures and Equipment.

1.2 REFERENCES

A. FM Global (FM).

B. National Fire Protection Association (NFPA):
   1. 13 - Standard for the Installation of Sprinkler Systems.
   2. 24 - Standard for the Installation of Private Fire Service Mains and Their Appurtenances.
   3. 26- Recommended Practices for the Supervision of Valves Controlling Water Supplies for Fire Protection.
   4. 70- National Electrical Code.

C. Underwriters' Laboratories, Inc., (UL):
   1. Fire Protection Equipment Directory.

D. International Fire Code (IFC).

1.3 SYSTEM DESCRIPTION

A. Design requirements:

1. Provide all labor, materials, equipment and services required to design, furnish, and install a complete automatic fire sprinkler system in the buildings scheduled.
2. Conform with all codes referenced and requirements listed in this Section.
3. Fire protection subcontractor licensed in the state where the Project is located.
4. Coordinate fire sprinkler work with fire detection system that provides supervisory signals to sprinkler equipment.
    a. Alarm detection requirements as specified in Section 16710.
5. Responsible for obtaining authority having jurisdiction approval stamp upon shop drawings and paying plan check, permit and inspection fees as necessary.
6. Responsible for coordinating inspections of fire sprinkler system by authority having jurisdiction.
7. Upon completion of the work, provide the City a copy of the "Contractor's Material and Test Certificate" Parts A and B, signed by the authority having jurisdiction, and a copy of the transmittal letter sending the certificate to the insurance carrier.

B. Design criteria:
1. Design all work in accordance with NFPA 13, the Uniform Fire Code, the requirements of the authority having jurisdiction and other specified requirements.
2. Fire sprinkler lines:
    a. The water source for fire sprinklers is potable City water.
    b. The water source for hydrants is potable City water.
3. Design and install fire protection system lines so as to avoid all existing utility lines, conduit, process lines, and structural components, as well as any new lines or structural components.
    a. Fire protection lines must give way to all gravity lines.
    b. Coordinate with other piping, electrical fixtures, etc., to avoid obstruction of sprinkler heads.
4. Maximum velocity through sprinkler lines, including cross mains, bulk mains and risers: 20 feet per second.
5. Maximum velocity through underground piping: 16 feet per second.
6. Provide provisions to properly drain all parts of the system.
7. Drains in above grade buildings:
    a. Pipe through walls to hard surfaces such as concrete splash pads.
    b. Show available plumbing fixtures and intended drain outlets on shop drawings.
    c. Do not discharge drains on sidewalks or other pedestrian areas.
8. Install alarm system to sound an audible onsite alarm and to electronically signal the Plant Control Center upon sensing water flow within the sprinkler monitored system, or unauthorized closure of system isolation valves.

9. Protect any sprinkler heads located where they could be accidentally hit with listed heavy wire guards.
    a. Show protective devices on shop drawings.
10. Distance between branch lines and sprinklers on branch lines: Not to exceed 15 feet for ordinary hazard occupancies.
11. Clearance between sprinklers and walls and sprinklers and structural members in accordance with NFPA 13, Chapter 4.
12. Mount adjacent to each main riser a metal box containing extra sprinkler heads and a sprinkler head wrench.
    a. Box contains 6 sprinkler heads if system has less than 300 heads and 12 sprinkler heads if system has more than 300 heads.
13. Locate and install waterflow test connections in accordance with NFPA 13, Chapter 4.
14. Where areas to be sprinklered are heavily congested with piping, provide additional sprinkler heads to give complete coverage.

C. Wet Pipe Sprinkler Schedule:

Occupancy	Water Density gpm per sq. ft.	Sprinkler Heat Temp. Rating (°F) *	Area Per Sprinkler Head (sq. ft.)
Membrane Filtration System Blower Building			
101	**0.20**	**212**	**100**
Membrane Filtration System Electrical Building			
101	**0.20**	**212**	**100**

D. Design and installation in accordance with NFPA 24. Capable of producing piping systems with the following minimum working pressure:
    1. Sprinkler Systems: 175 psi.

1.4 SUBMITTALS

A. Shop Drawings:
    1. Submit manufacturers literature, specifications, illustrations and engineering data including dimensions, size, weights and materials for the following:
        a. Pipe and fittings.
        b. Unions.
        c. Flexible couplings.
        d. Valves.
        e. Strainers.
        f. Automatic ball drip.
        g. Wet pipe alarm valve.
        h. Post indicator valve assembly.

i. Waterflow Alarm Indicator.
j. Gauges.
k. Temper switches.
l. Sprinkler heads.
m. Sprinkler cabinet.
n. Reduced pressure zone backflow preventer assembly.
o. Hangers and supports.
p. Escutcheons.
q. Pipe labels.
r. Other materials and equipment requested by ENGINEER.

2. Submit a reflected ceiling plan or layout of all areas with automatic sprinkler protection showing proposed location of sprinkler heads with respect to lights, diffusers, framing members, etc. After review of the reflected ceiling plan, prepare working drawings of the installation. Data on these working drawings shall include, but not be limited to, the following: size of all piping; method of anchoring or hanging pipe lines; location and type of valves; position, type and temperature ratings of sprinkler heads, zone valves, nozzles and detectors; material and equipment list indicating manufacturers; names and types; structural, mechanical, heating and ventilating, electrical and architectural coordinating information; hydraulic calculations and the carious other items pertinent to the complete installation of the systems. Working drawings, hydraulic calculations, specifications, etc. shall be submitted to Fireman's Fund and local authorities for checking and approval. Submit final approved working drawings, hydraulic calculations etc. for record purposes prior to starting any Work.

B. Closeout submittals:
1. As-built drawings: During progress of the Work, keep an up-to-date set of drawings showing field and Shop Drawing modifications. Immediately upon completion of piping Work, submit mylar tracing showing the actual in place installation of all piping and equipment installed under this Section at a scale satisfactory to the OWNER. The drawings shall show all piping on plans and in sections, with all reference dimensions and elevations required for complete Record Drawings of the piping systems. Two paper prints shall also be furnished. The tracings shall be furnished not later than 30 days after completion of the Contract and prior to final payment.

C. Verify thread types and sizes with the local fire department.

D. Operation and Maintenance Manuals:
1. Submit complete installation, operation and maintenance manuals including test reports, maintenance data and schedules, description of operation and spare parts information, including:
a. Fire department approved drawings.
b. Two copies of NFPA 13A "Recommended Practice for the Inspection Testing and Maintenance of Sprinkler Systems."

c. Two copies of NFPA 25 “Standard for Inspection, Testing and Maintenance of Water Based Fire Protection Systems.”

1.5 QUALITY ASSURANCE

A. Approve all materials for use in automatic sprinkler systems and in accordance with NFPA 13.

B. List components in the UL Fire Protection Equipment Directory for use as intended in automatic fire sprinkler applications and be acceptable to the ENGINEER. Material that is pending approval is not acceptable.

C. Qualifications for Welding Work:
   1. Qualify welding processes and welding operators in accordance with AWS "Structural Welding Code" D1.1, Section 5, Qualification and NFPA No. 13. Use only welding fittings for shop welding.
   2. Provide certification that all welders employed on or to be employed for the Work have satisfactorily passed AWS qualification tests within the previous 12 months. CONTRACTOR to ensure that all certifications are kept current.
   3. All welds will be subject to visual inspection. Where visually deficient welds are observed, the welds will be tested using non-destructive methods by a certified testing laboratory. If welds are found to be satisfactory, OWNER will pay for testing. Where welds are found unacceptable or deficient, CONTRACTOR will pay for testing. Correct improper workmanship, remove and replace, or correct as instructed, all welds found unacceptable or deficient. CONTRACTOR to pay for all corrections and subsequent tests required to confirm the integrity of the weld.

D. Field Measurements: Take field measurements where required prior to preparation of Shop Drawings and fabrication to ensure proper fitting of the Work.

E. Manufacturer Qualifications: Firms whose equipment, specialties, and accessories are listed by product name and manufacturer in UL Fire Protection Equipment Directory and FM Approval Guide and that conform to other requirements indicated.

F. Listing/Approval Stamp, Label, or Other Marking: On equipment, specialties, and accessories made to specified standards.

G. Listing and Labeling: Equipment, specialties, and accessories that are listed and labeled.
   1. The Terms "Listed" and "Labeled": As defined in "National Electrical Code." Article 100.
   2. Listing and Labeling Agency Qualifications: A "Nationally Recognized Testing Laboratory" (NRTL) as defined in OSHA Regulation 1910.7.

H. Comply with requirements of authority having jurisdiction for submittals, approvals, materials, hose threads, installation, inspections, and testing.

I. Licensed Engineer: Submit design drawings, design calculations, and installation inspection reports. Include seal and signature of Registered Engineer licensed in jurisdiction where Project is located, certifying compliance with Specifications.

J. Installer's Qualifications: Firms qualified to install and alter fire protection piping, equipment, specialties, and accessories, and repair and service equipment. A qualified firm is one that is experienced (minimum of five previous projects similar in size and scope to this Project) in such Work, familiar with precautions required, and in compliance with the requirements of the authority having jurisdiction. Submit evidence of qualifications to the ENGINEER upon request.

1.6 PROJECT CONDITIONS

A. Protection: Properly plug or cap the open ends of all pipes at the end of each day's Work or other stopping point throughout construction. Equipment shall be tightly covered and protected against dirt, water and chemical or mechanical injury.

B. Make all arrangements necessary with local authorities, obtain all permits, pay all fees to conduct fire hydrant flow tests as required to obtain hydraulic data needed to prepare design for the hydraulically calculated systems.

C. Furnish and install 22 gauge galvanized steel protective shields over large electrical panels, transformers, and motor control centers where required.

D. Visit the site of work and examine the premises in order to be completely familiar with the scope of work.

PART 2 - PRODUCTS

2.1 GENERAL

A. Provide specialty wiring for the interrelated devices. Locate controls, alarm actuating devices, and audible alarm signaling devices as specified in this Section.

B. Supply each fire alarm control with an alarm silence/acknowledge switch to silence the audible alarms.

C. Provide a fire alarm bell mounted on exterior building walls of all wet pipe fire protected areas.
   1. The bell will activate when the water flow switch detects flow, in accordance with NFPA 13, Sprinkler Alarms.

D. Place an identification sign near each fire alarm bell with wording in accordance with NFPA 13.

2.2 PIPING MATERIALS

A. Have a protective coating applied to: piping in laboratories, chemical storage areas, process areas, or other corrosive environments, in accordance with NFPA 13, Chapter 4.
   1. Do not coat Sprinkler heads after leaving the factory.

B. Steel Pipe: Interior:
   1. Pipe:
      a. Reference: ASTM A 795 or A 53.
      b. Weight: Schedule 40.
         1) Threaded or welded pipe-Schedule 40.
         2) Grooved pipe 2-inch and larger:
            a) Cut Grooved-Schedule 40.
            b) Roll Grooved-Schedule 10.
      c. Finish: Black.
      d. End Connections: compatible with fittings and accessories.
   2. Fittings:
      a. Threaded: ANSI B2.1.
         1) Reference: ANSI B16.3, Class 150 and 300, FM approved, UL listed.
         2) Material: Malleable Iron.
         3) Finish: Black.
      b. Grooved:
         1) Product and Manufacturer: Provide one of the following:
            a) Victaulic Company of America.
            b) Aeroquip Incorporated, Gustin Bacon Division.
            c) Or equal.
         2) Reference: FM approved, UL listed.
         3) Material: Malleable Iron.
         4) Finish: Black.
         5) Couplings:
            a) Type: Grooved mechanical.
            b) Material: Malleable iron, conforming to ASTM A47.
            c) Finish: Black.
            d) Nuts and Bolts: Carbon steel, conforming to ASTM A 449 and ASTM A 183.
            e) Gasket: EPDM, ASTM D 2000.
   3. Unions:
      a. Threaded: Malleable Iron, FS WW-U-531, Class 1, Type B. 1-1/2 inch pipe size and smaller only.
   4. Flanges:
      a. Type: Screwed, 125 lb. or 150 lb. ANSI A21.10 drilling.

b. Material: Steel, ANSI B16.5.
c. Gaskets: Red Rubber, ASTM D 1330, Grade 1, 1/8-inch thick.
d. Bolts and Nuts: ASTM A 307, Grade B.

5. Joint Compound:
   a. Underwriters Laboratory listed or Factory Mutual approved
6. Thread Tape:
   a. Material: Teflon.
   b. Underwriters Laboratory listed or Factory Mutual approved.
7. Flexible Coupling Assembly:
   a. Product and Manufacturer: Provide one the following:
      1) Victaulic Company of America.
      2) Aeroquip Incorporated, Gustin Bacon Division.
      3) Or equal.
   b. Reference: FM approved or UL listed.
   c. Material: Malleable iron, conforming to ASTM A 47.
   d. Finish: Red.
   e. Nuts and Bolts: Carbon steel, conforming to ASTM A 449 and ASTM A 183.
   f. Gasket: EPDM, ASTM D 2000.
   g. Pipe:
      1) Reference: ASTM A120.
      2) Weight: Schedule 40.
      3) Finish: Black.
      4) End Connection: Roll Groove.

C. Ductile Iron Pipe: Underground Water Service:
1. Pipe: Ductile Iron ANSI A21.51.
2. Fittings: Ductile-Iron ANSI A21.11.
3. Joints:
   a. Mechanical Joint:
      1) Glands, Bolts and Nuts: ANSI A21.11.
   b. Push-on Joint:
      1) Gaskets Rubber: ANSI A21.11
      2) Lubricant: ANSI A21.11.
4. Lining: Cement Lined ANSI A21.4.
5. Comply with requirements of Section 15051, Buried Piping Installation.

2.3 EQUIPMENT

A. Bronze Body Globe Valves:
1. Type: Teflon disc, union bonnet.
2. Materials: Brass and Bronze.
3. Rating: 150 lb. SWP.
4. End Connection: Threaded.
5. Product and Manufacturer: Provide one of the following:
   a. Stockham Valves and Fittings Fig. No. B-24.

b. Lunkenheimer Valve Fig. No. 126.
c. Or equal.

B. Bronze Body Gate Valves:
1. Type: Outside screw and yoke, rising stem solid wedge disc.
2. Materials: Brass and Bronze.
3. Rating: 175 lb. WOG.
4. End Connections: Threaded.
5. Markings: UL, FM, rating and manufacturers markings cast on body.
6. Size: 3/4-inch to 2-inch pipe size.
7. Product and Manufacturer: Provide one of the following:
a. Stockham Valves and Fittings Fig. No. B-133.
b. Lunkenheimer Valve, Fig. No. 831.
c. Or equal.

C. Iron Body Gate Valves:
1. Type: Outside Screw and Yoke, Rising Stem, Solid Wedge.
2. Materials: Iron Body with Bronze Trim.
3. Rating: 175 lb. WOG.
4. End Connections: Flanged ANSI B16.1, ANSI A21.10 drilling.
5. Markings: UL, FM, rating and manufacturers markings cast on body.
6. Size: 2-1/2-inch to 8-inch.
7. Product and Manufacturer: Provide one of the following:
a. Stockham Valves and Fittings Fig. No. G-634.
b. Crane, Fig. No. 467.
c. Or equal.

D. Iron Body Check Valves:
1. Type: Swing, Regrind-Renew Disc and Seat Ring, Bolted Cover.
2. Materials: Iron body, Bronze Trim, Bronze Disc and Seat Ring.
3. Rating: 175 lb. WOG.
4. End Connections: Flanged, ANSI B16.1, ANSI A21.10 Drilling.
5. Markings: UL, FM, rating and manufacturers markings cast on body.
6. Product and Manufacturer: Provide one of the following:
a. Stockham Valves and Fittings Fig. No. G-939.
b. Crane, Fig. No. 375.
c. Or equal.

E. Strainers:
1. Type: Self-cleaning "Y" Body with Blow-off cock.
2. Materials:
a. Body: Cast iron, galvanized.
b. Screen: Stainless steel with 3/16-inch diameter holes
c. Retainer: Steel.
d. Pipe Plug: Steel.
e. Rating: 175 lb. WOG.

f. End Connections: Threaded

3. Product and Manufacturer: Provide one of the following:
   a. The Viking Corporation.
   b. ITT Grinnell Corporation.
   c. Or equal.

F. Automatic Ball Drip
1. Type: Inline automatic ball drip.
2. Materials: Rough cast brass.
3. Rating: 175 lb. WOG.
4. End Connections: Threaded.
5. Product and Manufacturer: Provide one of the following:
   a. Potter-Roemer Incorporated, Fig. No. 148.
   b. W.D. Allen Manufacturing Company Allenco, Fig. No. 2112
   c. Or equal.

G. Wet Pipe Alarm Valves:
1. Type: Vertical, differential type with groove in seat with retard chamber.
2. Materials:
   a. Gray iron castings: ASTM A 48, Class 30B and ASTM A 126, Class B.
   b. Cast bronze: ASTM B 145 Alloy 5A.
   c. Clapper Facing: Neoprene, ASTM D 2000 Spec 2BC250.
   d. Brass Rod: CDA 360.
   e. Stainless steel: AISI 302.
3. Rating: 175 lbs WOG.
4. End connections: Flanged ANSI B16.1, ANSI A21.10 drilling.
5. Markings: UL Listed, FM approved markings, rating, year and manufacturers markings cast on body.
6. Accessories:
   a. Trim package shall consist of angle valves, ball valves, orifice restriction, pipe nipples and fittings.
   b. Retarding chamber for use with electric alarm system.
   c. Water pressure gauges.
   d. Flow switch for alarm signal to fire alarm control panel.
7. Product and Manufacturer: Provide one of the following:
   a. Grinnell Fire Protection Systems Company.
   b. The Viking Corporation.
   c. Or equal.

H. Gauges:
1. Type: Bourdon type having an enclosed phosphor-bronze tube.
2. Materials:
   a. Moving parts: Brass or stainless Steel.
   b. Case: Brass or Stainless Steel.
   c. Ring: Brass or Stainless Steel, threaded.
   d. Hair Spring: Phosphor-bronze.

3. Dial Markings: Subdivisions one percent of maximum scale reading.
    a. Pressure Gauge: 0 to 300 psi.
4. Accuracy: One percent of manufacturers specified pressure over the working range.
5. Face Diameter: 4-1/2-inch.
6. Product and Manufacturer: Provide one of the following:
    a. Acme Gauge and Instrument Company.
    b. United States Gauge Division Ametek Incorporated.
    c. Or equal.

I. Fire Department Connection:
1. Type: Flush-type wall mounted fire department connection, double clapper two-way inlets with plate and plugs.
2. End Connection: As required by local Fire Department.
3. Caps: Cast brass complete with gasket and chain with "S" hooks.
4. Material: Cast brass with satin finish chrome plating.
5. Wall Plate: Cast brass round with satin finish chrome plating.
6. Rating: 175 lb. WOG.
7. Markings: Manufacturers label and "AUTO-SPKR" cast on top.
8. Reference: UL listed, FM approved.
9. Product and Manufacturer: Provide one of the following:
    a. Croker Division, Fire End and Croker Corporation, Fig. No. 6012 Series.
    b. Potter-Roemer Incorporated No. 5211 Series.
    c. Or equal.

J. Automatic Sprinklers, Standard:
1. Type:
    a. Upright Spray: Deflector cupped downward at edges
    b. Pendent Spray: Flat deflector.
2. Material:
    a. Frame: Bronze casting ASTM B 145; threads, teflon taped.
    b. Levers: Bronze casting ASTM B 145 Alloy 5A.
    c. Link: Leaf and ball CDA-411.
    d. Waterway Washer: Copper ASTM B 5.
    e. Deflector: Brass ASTM B 19.
3. Finishes: Chrome plated, natural bronze or teflon coated.
4. Rating: 175 lb. WOG.
5. Markings:
    a. Upright Use: "SSU" stamped on deflector plate.
    b. Pendent Use: "SSP" stamped on deflector plate.
    c. All sprinklers shall be permanently marked with the manufacturer, the model, year and temperature rating.
6. End Connection: Threaded.
    a. Grinnell Fire Protection Systems Company.

b. The Viking Corporation.
c. Reliable.
d. Or equal.

K. Sprinkler Cabinets:
1. Type: Sprinkler head cabinet for sprinkler head, sprinkler wrench storage.
2. Material: Enameled Steel, painted “red” in color.
3. Markings: Manufacturers name and words "AUTOMATIC SPRINKLERS, RESERVE SUPPLY" stenciled on face of cabinet, with either “black” or “white” lettering.
4. Contents:
   a. Two sprinkler wrenches.
   b. Spare sprinkler heads of each type and spare heads of each temperature rating used in the building in accordance with NFPA 13.
5. Product and Manufacturer: Provide one of the following:
   a. Grinnell Fire Protection Systems Company.
   b. The Viking Corporation.
   c. Or equal.

L. Tamper Switch:
1. Type: Monitor open position of OS & Y sprinkler system valves.
2. Reference: UL listed, FM approved.
3. Tamper proof, NEMA 4X switch case.
4. Two single pole double throw switches.
5. Operation: The entire assembly shall be tamper proof, adjusted to operate within two revolutions of the valve control, or when stem has moved no more than 1/5 of the distance from its normal position.
6. Comply with the requirements of Section 16050, General Provisions.
7. Product and Manufacturer: Provide one of the following:
   a. Potter Electric Signal Company Model OSYSU-A.
   b. Notifier Company Model SGV.
   c. Or equal.

M. Post Indicator Valve Assemblies:
1. Reference, UL listed and FM approved.
2. Pressure Rating: 175 psig.
3. Type: Lug type butterfly valve with above ground indicator post to operate underground butterfly valve.
4. Opening: Counterclockwise motion.
5. Product and Manufacturer: Provide one of the following:
   a. ITT Kennedy Valve Company Model 911FM and Model 641.
   b. Mueller Company Model B3220 and Mode A-20800.
   c. Or equal.

N. Hangers and Supports:
   1. Type: Clamps, hooks, rods, hangers used to support a sprinkler piping system from the structure.
   2. Materials: Comply with the requirements of NFPA No. 13, Underwriters' Laboratory and Factory Mutual approved.
   3. Product and Manufacturer: Provide one of the following:
      a. ITT Grinnell Corporation.
      b. Elcen Metal Products Company.
      c. Or equal.

O. Escutcheons:
   1. Type: Split ring with set screw.
   2. Material: Chrome plated cast brass.
   3. Product and Manufacturer: Provide one of the following:
      a. ITT Grinnell Corporation, Fig. 13.
      b. Or equal.

P. Pipe Labels:
   1. Type: Self-adhering, temperature resistant, waterproof, corrosion resistant.
   2. Marker size, Marker color, Legend size, and Legend color shall conform to ANSI A13.1.
   3. Refer to Section 15050, Piping Systems.

Q. Electric Alarm Bell:
   1. Type: Electric alarm bell.
   2. Materials:
      a. Gong Shell: Alloy steel, painted.
      b. Plunger: Cadmium finish iron with stainless steel striking tip.
      c. Mounting Plate: Plated steel and drilled to fit standard back boxes.
      d. Back-Box Housing: Weather-proof die-cast aluminum with rubber gasket.
      e. Bell Guard: Cast aluminum, fasten to gong shell.
   3. Diameter: 10-inch.
   4. Voltage/Phase/Hertz: 120/1/60
   5. Decibel Rating: 97 decibels at 10-feet.
   6. Comply with the requirements of Section 16050, General Provisions.
   7. Product and Manufacturer: Provide one of the following:
      a. The Viking Corporation.
      b. Grinnell Corporation.
      c. Or equal.

R. Waterflow Alarm Indicators:
   1. Type: Flexible vane projecting into the waterway with pneumatic retard.
   2. References: UL listed, FM approved.
   3. Two single pole double throw switches rated at 10 amps, 120/240 volts AC.
   4. Flow sensitivity adjustment from 0 to 90 seconds.

5. Comply with the requirements of Section 16050, General Provisions.
6. Product and Manufacturer: Provide one of the following:
   a. The Viking Corporation, Model VSR-F.
   b. Grinnell Corporation, Model WFD.
   c. Or equal.

S. Backflow Preventers:
   1. Backflow preventers shall be in accordance with the City of Chandler, AZ Standard Details for furnishing and installing backflow prevention assemblies.

2.4 VALVES

A. List all valves on connections to water supplies and supply lines to sprinklers indicating valves, OS&Y type, (listed indicating valve assemblies are acceptable).

B. Valves operated at maximum speed: Not close in less than 5 seconds.

C. Provide a warning sign of type specified in Division 10 at isolation valves controlling the water supply to fire sprinkler system, indicating that an alarm will sound if valve is closed.

2.5 MATERIAL SELECTION

A. All piping within building shall be Schedule 40 steel pipe painted in accordance with Section 09900, Painting. Roll grooved piping 2-inch and larger may be Schedule 10 at CONTRACTOR'S option.

B. Sprinkler Heads:
   1. Natural bronze, corrosion resistant upright or pendent as required shall be used in the areas designated corrosive atmosphere on the Corrosive Non-Corrosive Area Designation Table on the Drawings. Sprinklers in Corrosive areas shall be teflon coated for corrosion resistance.
   2. Natural bronze, upright or pendent sprinkler heads as required shall be used in areas designated non-corrosive.

2.6 HANGERS AND SUPPORTS

A. Hangers and supports in accordance with NFPA 13, Chapter 4.

2.7 SEISMIC RESTRAINT

A. Specify seismic restraint in accordance with NFPA 13, Chapter 4.

PART 3 - EXECUTION

3.1 PREPARATION

A. Coordinate work of this Section with other affected work.

3.2 INSTALLATION

A. General:
   1. The installation of the sprinkler system shall conform to the requirements of the NFPA Standard No. 13, Factory Mutual Systems Standard No. 2-8N and the supplemental Specifications below.
   2. Provide all necessary supports, angle iron stands, miscellaneous steel, inserts, anchor bolts and hangers required for all equipment furnished under this Section. Supports, angle iron stands, etc., shall be in accordance with Section 05500, Metal Fabrications.
      a. Space supports so that there is at least one hanger for each length of pipe, with one hanger within 30-inches of the end sprinkler head.
      b. Do not hang piping from ductwork or other piping.
   3. Install equipment in accordance with manufacturers instructions.
   4. Request instructions from the ENGINEER when there is a conflict between the manufacturer's recommendations and the Contract Documents.
   5. Present conflicts between piping systems and equipment or structures to the ENGINEER who will determine corrective measures to be taken.
   6. Do not modify structures to facilitate installation of piping, unless specifically approved by the ENGINEER.
   7. Defective Materials: Examine piping, fittings, valves, sprinkler heads, and accessories to be installed and reject those which are defective or in poor condition.
   8. Cleaning: Thoroughly clean all piping, fittings, valves and accessories.
   9. At various stages of completion as directed by the enforcing authority, and upon completion, hydrostatically test system.
   10. Required tests must be witnessed by authority having jurisdiction and ENGINEER.
   11. Locate fire department connection with sufficient clearance from walls, obstructions, or adjacent siamese connectors to allow full swing of fire department wrench handle.
   12. Place deep escutcheons where required to accommodate sprinkler heads occurring at unavoidable below-ceiling obstructions.
   13. Apply masking tape or paper cover to ensure concealed sprinkler heads do not receive field paint finish.

B. Piping:
   1. Place pipe runs to minimize obstruction to other work.
   2. Place piping in concealed spaces above finished ceilings.
   3. Install straight runs true to line and elevation.

4. Install vertical pipe truly plumb in all directions.
5. Install piping parallel or perpendicular to building walls. Piping at odd angles and 45° runs across corners will not be accepted.
6. Install small diameter piping (1-inch minimum) generally as required to avoid ducts, equipment, beams, etc.
7. Provide drains at low points of all lines and wherever sprinkler piping is trapped.
8. Install underground piping in accordance with NFPA No. 24 Chapter 8.
9. Install sprinkler heads at centerline of corridors.

C. Joints:
   1. General:
      a. Make joints in accordance with the pipe manufacturer's recommendations and the supplemental specifications below.
      b. Cut piping accurately and squarely and install without forcing or springing.
      c. Ream out all pipes and tubing to full inside diameter after cutting.
      d. Remove all cuttings and foreign matter from the inside of pipes and tubing before installation.
   2. Threaded Joints: Use standard, right hand tapered full depth threads on steel piping and apply an approved joint compound to the male threads only, before installation. Leave not more than three pipe threads exposed at each connection.
   3. Flanged Joints: Assemble flanged joints with approved full face gaskets and gasket compounds and draw up flange bolts evenly.
   4. Welded Joints: ANSI B31.1 latest revision and requirements of the American Welding Society for pipe welding.
   5. Grooved Joints: Grooves for couplings shall be fabricated in accordance with manufacturer’s recommendations.

D. Unions:
   1. Provide a union downstream of each valve with screwed connections.
   2. Provide screwed or flanged unions where necessary to install piping, and so that piping may be readily dismantled in small sections.

E. Valves and Accessories:
   1. Provide supports for large valves, and other heavy.
   2. Install floor stands as recommended by the manufacturer.
   3. Position valve operators where required. When the position is not shown, install the valve so that it can be conveniently operated and as approved by the OWNER. Avoid placing operators at odd angles to the floors or walls.
   4. Any valve placed so that its operating mechanism is more than 7-foot above a floor or stair landing, a 12-inch wide wrought iron, steel or equivalent ladder securely fastened shall be provided for access to the valve.
   5. Install buried shut-off valves in valve box.
      a. Provide post indicator and tamper switch.

6. Provide double check valve assembly at sprinkler system water source connection.

F. Heads:
   1. Actual quantity and locations shall be as required by the local fire protection agency (Fire Marshal's Office) and OWNER'S underwriter. Design, furnish and install complete, all piping and sprinkler heads as required to conform to all local, state, and federal laws, codes, and ordinances having jurisdiction over this Project.
   2. Center heads in one direction only in ceiling tile with location in other direction variable, dependent upon spacing and coordination with ceiling elements.

G. Sprinkler Head Guards:
   1. Sprinkler heads which are less than 84-inches above finished floor or are so located as to be subject to injury, shall be protected with approved guards.

H. Gauges:
   1. An approved 3-1/2-inch diameter spring pressure gage shall be installed at each test pipe location.

I. Control Valves:
   1. All section control valves shall be installed where required and in accessible locations as required by the local Fire Marshall or Factory Mutual Systems.
   2. Each sprinkler zone shall have a control valve.

J. Test Pipes:
   1. Test pipes shall be provided in accordance with NFPA Standard 13 and same shall discharge into the nearest open site floor drain or outside of building.

K. Signs:
   1. Enameled signs with appropriate nomenclature as approved by the local Fire Marshall, shall be installed at each control valve, drain, inspector's test station, alarm bell, etc.

L. Shields:
   1. Furnish and install hoods or shields to protect electrical equipment from water. Hoods or shields shall be fabricated from non-combustible materials.

M. Flexible Couplings:
   1. Provide flexible couplings comprised of several grooved joints and grooved couplings adjacent to the previous as required on each sprinkler line crossing a building expansion joint. Grooved joint and coupling assembly shall be UL listed or FM approved, for use with Schedule 40 steel pipe with cut groove joint.

3.3 WIRING

A. System wiring and installation: As specified in Section 16123 and with the applicable codes and recommendations of the manufacturer.

B. Color code, tag and check wiring to assure that it is free from shorts and grounds.
   1. Tag circuits showing circuit number and area served, and for conductor identification.

C. Install system wiring in conduit:
   1. Use conduit type as specified in Section 16050.
   2. Provide conduit as specified in Section 16130.

3.4 TESTING

A. General: Perform testing as specified in Division 1.

B. Perform field acceptance tests of each fire protection system.
   1. Flush, test, and inspect sprinkler piping systems according to NFPA 13 Chapter "System Acceptance."

C. Replace piping system components that do not pass test procedures specified, then retest to demonstrate compliance. Repeat procedure until satisfactory results are obtained.

D. Performs tests in the presence of the ENGINEER and authority having jurisdiction.
   1. Test of system must be approved and signed by authority having jurisdiction prior to acceptance by ENGINEER.

3.5 CLEANING

A. Clean dirt and debris from sprinklers. Replace sprinklers having paint other than factory finish with new sprinklers. Cleaning and reuse of painted sprinklers is prohibited.

B. Flush piping system with water at a velocity of not less than 14 feet per second.

3.6 COMMISSIONING

A. Starting Procedures: Follow manufacturer's written procedures. If no procedures are prescribed by manufacturer, proceed as follows:
   1. Verify that specialty valves, trim, fittings, controls, and accessories have been installed correctly and operate correctly.
   2. Verify that excess pressure pumps and accessories have been installed correctly and operate correctly.
   3. Verify that specified tests of piping are complete.

4. Check that damaged sprinklers and sprinklers with paint or coating not specified have been replaced with new, correct type of sprinklers.
5. Check that sprinklers are correct type, have correct finish and temperature ratings, and have guards where required for applications.
6. Check that potable water supplies have correct type of backflow preventer.
7. Check that fire department connections have threads compatible with local fire department equipment and have correct pressure rating.
8. Fill wet-pipe sprinkler systems with water.
9. Energize circuits to electrical equipment and devices.
10. Adjust operating controls and pressure settings.
11. Comply with the requirements Division 1 regarding Equipment and System Startup and Performance Testing and Commissioning.

B. Coordinate with fire alarm system tests. Operate systems as required.

3.7 TRAINING

A. Provide instruction for eight people.

B. Duration: five hours.

C. Demonstrate system and instruct OWNER's personnel in operation, repair, and maintenance of the work of this Section.

D. Provide not less than 4 hours of training on operation and maintenance of fire sprinkler system, conducted by the Fire Protection Contractor.

++ END OF SECTION ++

SECTION 14630

HOISTS, TROLLEYS, MONORAILS, BRIDGE CRANES

PART 1 - GENERAL

1.1 SUMMARY

A. This Section includes bridge crane trolley and hoists for the Membrane Filtration System. The hoists and trolleys manufacturer shall furnish the hoists and trolleys as indicated on the Drawings and as specified herein.

B. Provide bridge crane hoists and trolleys designed for compatibility with girder beams, as indicated on the Drawings, and within the required clearances and travel distances.

1.2 RELATED DOCUMENTS

A. Drawings and General Provisions of the Contract, including General and Supplementary Conditions and Division 1, General Requirements, Specification Sections, apply to this Section.

1.3 RELATED SECTIONS

A. The following Sections contain requirements that relate to this Section:
   1. Section 05120, Structural Steel and Framing, for structural steel to which bridge crane components are fastened.
   2. Section 09900, Painting for field painting of bridge crane components.
   3. Division 16, Electrical, Sections for electrical service to bridge crane hoists and trolleys, including fused disconnect switches and electric motors.

1.4 DEFINITIONS

A. Bridge Crane Hoist: Cranes by which load blocks are hoisted by wire ropes using an electrically driven drive trolley and are defined to include driving machines; trolleys; hoists; brakes; roping; buffers; signals; control systems; electrical wiring within crane system; and devices for operations, safety, security, required performance at rated speed and capacity, and for complete crane installation.

B. Bridge Crane: A double girder and end trucks supported by a building or structure with rails to which the trolley and hoist are fastened.

C. Hook Height: The minimum acceptable distance in feet from the bottom of the hook in full raised position to the nearest floor surface.

D. Lift Height: The distance in feet form the bottom hook in full raised position to the surface of the lowest floor from which items may be hoisted.

E. Ultimate Load-Carrying Capacity: Live Load, weight of all equipment and an allowance for impact.

F. Total Trolley Capacity: The ultimate load-carrying capacity of the trolley based on the ultimate strength of the material (with a 5:1 safety factor) and the bearing life.

1.5 SUBMITTALS

A. General: Submit each item in this Paragraph according to the Conditions of the Contract and Division 1, General Requirements, Specification Sections.

B. Product data for each bridge crane hoist, including capacities, sizes, performances, operations, safety features, finishes, and similar information.

C. Shop Drawings for each bridge crane hoist showing plans, elevations, sections, and large-scale details indicating coordination with building structure, and relationships with other construction. Indicate variations from specified requirements, maximum dynamic and static loads imposed on building structure at points of support, and locations of equipment and signals. Include maximum and average power demands.

D. Maintenance Manuals for each different bridge crane hoist, including operation and maintenance instructions, parts listing with sources indicated, recommended parts inventory listing, emergency instructions, erection or assembly drawings, repair parts bulletins, lubrication instructions, instructions for making repairs, and similar information. Include all diagnostic and repair information available to manufacturer's and installer's maintenance personnel.
   1. Submit manuals for approval before any components of the bridge crane system are shipped to the job site.

E. Inspection and Acceptance Certificates and operating permits (if any) as required by governing authorities for normal, unrestricted bridge crane use.

1.6 QUALITY ASSURANCE

A. Installer Qualifications: Engage the bridge crane manufacturer or an experienced installer approved by the bridge crane hoist manufacturer who has completed bridge crane hoist installations similar in material, design, and extent to that indicated for this Project and with a record of successful in-service performance.

B. Regulatory Requirements: In addition to local governing regulations, comply with OSHA Standards and the following:
   1. Motor protection in all phases.
   2. Branch circuit over current protection for all motors.
   3. Running motor protection by use of automatic overload relays.
   4. Rubber bridge and trolley bumpers shall be provided.

4. All hooks shall be provided with safety latches.

1.7 WARRANTY

A. General Warranty: The bridge crane hoist warranty specified in this paragraph shall not deprive the OWNER of other rights the OWNER may have under other provisions of the Contract Documents and shall be in addition to, and run concurrent with, other warranties made by the CONTRACTOR under requirements of the Contract Documents.

B. Standard Bridge Crane Hoist Warranty: Submit a written warranty signed by manufacturer agreeing to repair, restore, or replace defective Work within the specified warranty period.
   1. Warranty Period: 12 months from date of substantial completion.

PART 2 - PRODUCTS

2.1 MANUFACTURERS

A. to compliance with requirements, provide products by one of the following:
   1. Demag (https:www.demagcranes.us/)
   2. Konecranes
   3. R&M Material Handling
   4. Or approved equal.

2.2 BRIDGE CRANE, GENERAL

A. General: Provide manufacturer's standard bridge crane hoist system, consisting of a single motor drive trolley, electric hoist, control panel, and all necessary components for a complete and operational system. Where components are not otherwise indicated, provide standard components, published by manufacturer as included in standard pre-engineered monorail systems and as required for a complete system, and conforming with the following:
   1. Stresses: Select materials for the stress which they will be subjected. Design load carrying parts, except girders and hoisting ropes so that the calculated static stress in the material, based on rated load, does not exceed 25% of the assumed average ultimate strength of the material. This limitation of stress provides a margin of strength to allow for variations in the properties of materials, manufacturing, and operating conditions, and design assumptions.
   2. Material: All structural steel used shall conform to ASTM A36 Standards or shall be an accepted type for the purpose for which the steel is to be used and for the operations to be performed on it. Other suitable materials may be used provided parts are proportioned to give comparable design factors. Provide tough grade, gray iron castings, free from injurious blow holes and cold shuts.

3. Workmanship: Construct all bridge crane components in a thorough and workmanlike manner with due regard given in the design for safety of operation, accessibility, interchangeability, and durability of parts.
4. Assembly: Provide fully assembled bridge crane, wired completely, and given no-load running tests at manufacturers plant before shipment with wires pulled through conduit and tagged for identification where connections are necessary. Running tests shall be performed with the control which will operate the crane when in service. Match-mark or tag all wiring and mechanical connections after testing and before dismantling for shipment to ensure proper field assembly.
5. Painting: Before shipment, the crane shall be cleaned and painted a prime coat and two finish coats in accordance with manufacturers standard and shall meet the requirements of Section 09900, Painting.
6. Lubrication: Provide hoist with all necessary lubrication fittings. Enclose gear trains in oil or grease-tight housings. High-speed gearing and bearings shall be splash lubricated, except for the final gear reduction at the driving wheel.

2.3 HOIST AND TROLLEY DESIGN CRITERIA

A. Provide equipment for each bridge crane hoist to comply with requirements indicated below:
   1. Class C Service, ANSI Specification No. MH27.1.
   2. Monorail Manufacturers Association.

B. General Crane Features:
   1. Heavy duty bridge drives with totally enclosed gears in oil bath.
   2. Pushbutton station with ergonomic design and LCD crane status update display.
   3. Technology package with hoist defense and overload protection.
   4. Thermal protection on all motors.
   5. Squirrel cage motors with fail safe disk brakes on all motions.
   6. Heavy duty rope guide to prevent wire rope overlap.
   7. Limit switch for hoisting up and down with 4 adjustable limits.

C. RWIF Membrane Filtration System Hoist: Provide a double girder, top-running, electric trolley and hoist, and conforming to the following:
   1. Capacity: 5 ton.
   2. Girder Span: 62 feet.
   3. Hoist Hook Height (feet): 10 feet 7-inches measured from the top of RWIF Membrane Filtration System membrane covers.
   4. Hoist Lifting Height (feet): 27 feet 0-inches from the finish floor of the Membrane Filtration System Facility (21 feet 2-inches measured from the attachment point of the installed membrane cassettes).
   5. Type of Bumper: Rubber.
   6. Ambient Temperature: 120º F maximum and 40º F minimum.
   7. Humidity: 100%.
   8. Materials Handled: Membrane Filtration System Cassettes.

9. Speeds Required:
    a. Hoist: Two speeds; 20.0 feet per minute, 3.2 feet per minute.
    b. Traversing Speed: 65 feet per minute,
    c. Travelling Speed: 100 feet per minute.
10. Crane Control: Single, pendant type, push-button station suspended from a supporting track, capable of controlling the trolley and hoist from anywhere along the bridge crane.
11. Power Supply: 460 V, 60 Hz, 3-phase.
12. Horsepower: 11 horsepower maximum.
13. Crane Motors: T.E.N.V., 30 minute, with Class H insulation, 55º F rise over 60º F ambient, with AC disc brake.

2.4 BRIDGE CRANE MATERIALS AND COMPONENTS

A. Girder: All structural connections shall be of welded construction. An auxiliary truss shall be connected to the end trucks to ensure their alignment and rigidity. All necessary supports for drive assembly and controls shall be provided. The girder shall be equipped with trolley bumpers. The bridge crane girders shall be provided by the CONTRACTOR.

B. End Trucks: Constructed of built-up steel plate shaped to form a rigid section. Ends of the trucks shall be extended to form a mounting for rail sweeps and end stops, with ends of the trucks anchored together to ensure alignment. Trucks shall be bored to receive wheel axles or capsule bearings to assure permanent alignment of the stops, designed so that each wheel bearing carries an equal share of the load. The wheels shall be forged steel with flat treads and double flanges and mounted on alloy rotating axles turning on spherical roller bearings.

C. Clearance: Bridge and runway shall be designed with a minimum clearance, as indicated on the Drawings.

2.5 TROLLEY AND HOIST MATERIALS AND COMPONENTS

A. Trolley:
    1. Trolley: Motor driven and compatible with hoists and crane system specified. Trolley shall also be compatible with the bridge crane as shown on the Drawings. Trolley shall be fabricated from steel shapes and adjustable to fit the lower flange of the bridge crane girder as indicated on the Drawings. Trolley wheels shall be single flanged. Trolley stop design shall be to engage the trolley frame rather than trolley wheels.
    2. Trolley shall have minimum B-10 bearing life of 5,000 hours based on 75% of the wheel load, excluding impact.
    3. Trolley shall be motor driven and operate at two speeds as specified. Motor shall have enclosed internal gears in an oil-tight housing. Motor shall operate with 460 V, 3-phase, 60 Hz.

B. Hoist:
   1. Hoisting Mechanism: The hoisting machinery shall consist of an electric motor driving through helical and spur gears with surfaces hardened for wear resistance, with steel hoist drum grooved to fit cable. Overload cutoff hoist to be equipped with electrical load cutoff set at 120% of the rated load and shall reset when load is lowered. Load limiting clutches will not be acceptable. The gear casing shall be oil-tight for oil lubrication of the gears. The hoist frames shall be of welded heavy steel plate construction.
   2. Hoist wire rope and reeving: The hoisting wire rope shall be of proper design and construction for hoist service. The rated capacity load divided by the number of parts of the rope shall not exceed 20 percent of the breaking strength of the rope. Hoist reeving shall be single reeved or double reeved, for true vertical lift, as appropriate for the application. Assure that two complete wraps of rope remain on the drum after lowering the load hook through its rated lift distance, unless a lower limit device is provided, in which case provide a minimum of one complete wrap.
   3. Rope Drum: Machined rope drum to be of welded construction, deep grooved and precision machined supported at each end by sealed anti-friction bearings. Sheave and drum grooves shall be smooth and free from surface irregularities which could cause rope damage. Drum diameter shall not be less than 18 times the diameter of the rope used. Construct rope drum and surrounding units to minimize abrading, crushing or jamming of the rope during usage.
   4. Bearings shall be antifriction type, minimum B-10 life of 1,250 hours for Class H1, 2,500 hours for Class H2, and 5,000 hours for Class H3, based on full rated speed and mean effective load K of 0.65.
   5. Brakes: Equip each hoisting unit with two brakes; one DC electrical motor brake spring self-setting electrically released; the other a self-adjusting Weston type mechanical load brake. Provide torque rating of the holding brake equal to 125% of the full load torque of the hoist motor and applied by electric means. The control braking means shall have sufficient capacity to control the safe lowering speed of the load without overheating while handling the duty cycle of operation. The brake shall be capable of holding the rated load in the event of failure of either brake system.
   6. Load chain shall be provided and formed closely calibrated pocket wheel of high strength low allow steel. Load chain shall be case hardened for long wear heavy duty service. The load chain shall be zinc plated for corrosion resistance.
   7. Provide hoist nameplate with the following information:
      a. Name and address of manufacturer.
      b. Manufacturer's unit identification number.
      c. Rated load.
      d. Voltage of AC or DC power supply and phase and frequency of AC power supply.
      e. Rated Amperage.

f. End stops: Provide end stops at all track ends. End stops shall be anchored to the monorail beam as required to prevent damage to equipment and configured as required to comply with monorail operating clearances and travel distances indicated. End stops shall be provided at each end of the girder to prevent over travel of the trolley hoist.

8. Hook: Provide hook with capacity for indicated loads.

2.6 ELECTRICAL

A. Motors: Enclosed type, specifically designed for crane service, of the squirrel cage NEMA design D and of such size that they will run continuously for thirty minutes with a temperature rise not to exceed 55º C, wound with Class "H" insulation. Equip motors with anti-friction bearings and required shaft extensions. Motors shall be rated for 150% of the motor torque. Motor ball bearings shall be sealed and permanently lubricated. Provide automatic temperature reset actuated switch in motor winding to provide motor over current protection.

B. Provide motor starters, power cable length to meet the requirements shown on the drawings plus an additional 20 feet, electric conduit, control stations, magnetic reversing contactors and low-voltage transformer, necessary for a complete and totally functional conveying system.

C. Provide the drive with a NEMA 4X enclosure. Mount the drive inside the crane control panel.

D. Provide a contactor in the power circuit to supply the drive.

E. Provide a drive designed to protect itself against all normal transients and surges from the incoming power circuit, phase-to-phase faults on the output of the drive, and disconnection of the load. Isolation transformers shall not be used for ground fault protection.

F. Terminate conductors leaving the enclosure on a numbered terminal strip.

G. Provide a dynamic braking resistor on all horizontal motion units. Size resistor to provide at least 125% braking torque.

H. Provide a contactor for control of the brakes.

I. Provide a floor/uni-strut mounted NEMA 4X SS junction box for termination of power conductors from a 480V, 3-phase power source. Conductors from this box to the crane equipment shall be provided per Crane manufacturer’s instructions.

J. Basic features and controls:

1. Provide pendant pushbutton station with reversing type contactors for electric hoists and trolleys. Clearly mark function of each button.

2. Single station for both trolley and hoist.
3. Suspend control station from trolleys.
4. Suspend control station in a manner that will protect the electrical equipment conductors against strain.
5. The control panel shall be operable from 115 V power supply. Control station shall be grounded to hoist. Provide control cable lengths of 2 feet less the distance from the top of the Membrane Filtration System Facility to the finished floor.
6. Provide a drive designed specifically for use with crane and hoist systems.
7. Provide a drive complete with all standard features and protective devices.
8. Provide two distinct operating speeds in each direction with each of the two speeds independently set.
9. Provide a drive with protection for over voltage, under voltage, over current, and over temperature. Provide thermal overload protection for the motor. Provide a means to indicate the reason for a protective trip.

K. Hoist Limit Switch: Provide limit switch which limits the upward travel of the hoist block by removing power from the motor and applying the brake. Upper limit switch to be block operated. Lowering the block shall automatically reset the switch. Provide a lower limit switch that will prevent lowering the load beyond preset lower limit. Provide either power circuit or control circuit type limit switch. Interruption of the hoist motion shall not interfere with the lowering motion.

L. Wiring: Completely wire bridge crane hoist before shipment with stranded type wiring of sufficient size to safely carry the load, completely enclosed in conduit or raceways. Insulated wire, conduit, fittings, and other wiring components must conform with the National Board of Fire Underwriters. Wiring of motor operated equipment must comply with Article 610 of the National Electrical Code.

M. Bridge Crane Electrification: Provide electrical power to the motor-driven hoists and trolleys using one of the following methods as specified below:
   1. Festoon Tagline System:
      a. Provide festooned flexible cable system suspended from anti-friction bearing trolleys on a rigid type track supported from the monorail. Pendant shall be supported on a separate track and trolley system Provide all splices and power feed as required for a complete system and shall be UL approved and provided with all brackets, hangers, power feeds, end caps and collectors. Include all components needed for a complete and operable system.
   2. Cable Reel System:
      a. Provide a 360 degree swivel base. Provide cable of full working length plus 25%. Include all components needed for a complete and operable system. Provide all splices and power feed as required for a complete system shall be UL approved and provided with all brackets, hangers, power feeds, end caps and collectors.

PART 3 - EXECUTION

3.1 EXAMINATION

A. Examine bridge crane hoist areas, with installer present, for compliance with requirements, installation tolerances, and other conditions affecting performance of monorail work. Examine structure, channels, openings, walls, pits, and wash-down areas, as constructed; verify critical dimensions; and examine supporting structure and other conditions under which bridge crane work is to be installed. Do not proceed with installation until unsatisfactory conditions have been corrected.

3.2 INSTALLATION

A. Comply with manufacturer's instructions and recommendations. Do not proceed with installation until the maintenance manual submittal as described in Part 1 of this Specification, has been approved.

B. Welded Construction: Provide welded connections for installing bridge crane hoist work where bolted connections are not required for subsequent removal or for normal operation, adjustment, inspection, maintenance, and replacement of worn parts. Comply with AWS standards for workmanship and for qualifications of welding operators.

C. Coordination: Coordinate monorail work with work of other trades for proper time and sequence to avoid construction delays. Use established benchmarks, lines, and levels to ensure dimensional coordination of the Work.

D. Lubricate operating parts of systems, including ropes, as recommended by manufacturers.

E. Alignment: Coordinate installation of trolley and hoist with installation of bridge crane girders for accurate alignment.

3.3 FIELD QUALITY CONTROL

A. Acceptance Testing: Upon nominal completion of bridge crane installation and before permitting use (either temporary or permanent) of bridge cranes, perform acceptance tests as required and recommended by the "Code" and governing regulations and agencies.

B. Operating Test: Load monorails to 125% rated capacity and operate continuously for 30 minutes over full travel distances, stopping at locations as directed by the OWNER and proceeding immediately to the next. Record temperature rise of monorail machines during 30 minute test period. Record failure of monorails to perform as required.

C. Advise OWNER, ENGINEER, and authorities having jurisdiction in advance of dates and times tests are to be performed on monorails.

3.4 DEMONSTRATION

A. Instruct OWNER'S personnel in proper use, operation, and daily maintenance of bridge cranes. Review emergency provisions, including emergency access and procedures to be followed at time of failure in operation and other building emergencies. Train OWNER'S personnel in procedures to follow in identifying sources of operational failures or malfunctions. Confer with OWNER on requirements for a complete monorail maintenance program.

B. Make a final check of each bridge crane operation with OWNER'S personnel present and just prior to date of substantial completion. Determine that operation systems and devices are functioning properly.

3.5 PROTECTION

A. Temporary Use: Do not use bridge cranes for construction purposes.

B. Provide protective coverings, barriers, devices, signs, or other procedures to protect bridge cranes. If, despite such protection, bridge cranes become damaged, engage bridge crane installer to restore damaged work so that no evidence remains of correction work. Return items that cannot be refinished in the field to the shop, make required repairs and refinish entire unit, or provide new units as required.

C. Provide final protection and maintain conditions, in a manner acceptable to bridge crane manufacturer and installer that ensure bridge cranes are without damage or deterioration at the time of substantial completion.

3.6 PAINTING

A. Paint all bridge crane, monorail, and hoist components. Surface preparation and painting shall be per Section 09900, Painting.

++ END OF SECTION ++

SECTION 15010

BASIC MECHANICAL REQUIREMENTS

PART 1 - GENERAL

1.1 SECTION INCLUDES

A. Basic Mechanical Requirements specifically applicable to Division 15, Mechanical, Sections, in addition to Division 1, General Requirements.

1.2 WORK SEQUENCE

A. Install Work to accommodate OWNER'S occupancy requirements during the construction period. Coordinate mechanical schedule and operations with OWNER and ARCHITECT/ENGINEER.

1.3 SUBMITTALS

A. Submit under provisions of Division 1, General Requirements.

B. Submit Shop Drawings and product data grouped to include complete submittals of related systems, products, and accessories in a single submittal.

C. Mark dimensions and values in units to match those specified.

D. Submit published ratings or capacity; detailed equipment drawings for fabricated items.

E. Submit complete electrical schematic and connection diagrams for each particular motor control or other electrical system. Generic diagrams are not acceptable.

F. Submit manufacturer’s printed instructions for installation.

G. Shop Drawings: Submit for approval the following:
   1. A copy of this specification section, with addendum updates included, and all referenced and applicable sections, with addendum updates included, with each paragraph check-marked to indicate specification compliance or marked to indicate requested deviations from specification requirements. Check marks (✓) shall denote full compliance with a paragraph as a whole. If deviations from the specifications are indicated, and therefore requested by the CONTRACTOR, each deviation shall be underlined and denoted by a number in the margin to the right of the identified paragraph, referenced to a detailed written explanation of the reasons for requesting the deviation. The ENGINEER shall be the final authority for determining acceptability of requested deviations. The CONTRACTOR shall furnish equipment and/or

services as specified if an exception and/or deviation is rejected. The remaining portions of the paragraph not underlined will signify compliance on the part of the CONTRACTOR with the specifications. Failure to include a copy of the marked-up specification sections, along with justification(s) for any requested deviations to the specification requirements, with the submittal shall be sufficient cause for rejection of the entire submittal with no further consideration.

2. The CONTRACTOR shall submit the preventive maintenance information package as part of the shop drawing submittal package to the ENGINEER for review and approval. **SHOP DRAWING SUBMITTAL PACKAGE WILL NOT BE APPROVED WITHOUT ACCEPTANCE OF PREVENTIVE MAINTENANCE INFORMATION.**

1.4 REGULATORY REQUIREMENTS

A. Conform to editions in effect on the date of Advertisement for Bids.

B. Plumbing: Conform to Uniform Plumbing Code.

C. Obtain permits and request inspections from authority having jurisdiction.

1.5 PROJECT/SITE CONDITIONS

A. Existing conditions shown on Drawings are based on casual field observation and existing Record Documents.

B. Install Work in locations shown on Drawings, unless prevented by Project conditions.

C. Prepare Drawings showing proposed rearrangement of Work to meet Project conditions, including changes to Work specified in other Sections. Obtain permission of ARCHITECT/ENGINEER before proceeding.

PART 2 - PRODUCTS (NOT USED)

PART 3 - EXECUTION

3.1 DRAWINGS

A. Drawings are diagrammatic in character. Exact locations of systems and their elements shall be as determined from the structure and the equipment, not from the Drawings.

3.2 SPACE REQUIREMENTS

A. Verify space requirements of materials and equipment before ordering. Equipment that will not enter openings or that will not fit the assigned space will not be accepted.

3.3 DRAWINGS INTERPRETATION

A. All omissions, discrepancies, or questions of clarity of intent of Drawings and/or Specifications shall be referred to ARCHITECT/ENGINEER for interpretation before bid is submitted.

3.4 RECORD DOCUMENTS

A. Prepare Record Documents under provisions of Division 1, General Requirements.

3.5 MECHANICAL EQUIPMENT

A. Install mechanical equipment to facilitate maintenance, repair, and/or replacement of equipment and components. As much as practical, connect equipment for ease of disconnecting with minimum interference with other installations.

3.6 COORDINATION

A. Coordinate connection of mechanical systems with exterior underground and overhead utilities and services. Comply with requirements of governing regulations, franchised service companies, and controlling agencies. Provide required connection for each service.

++ END OF SECTION ++

SECTION 15030

CLEANING MECHANICAL SYSTEMS

PART 1 - GENERAL

1.1 WORK INCLUDED

A. Comply with provisions of Section 15010.

B. Cleaning ducts and apparatus casings.

C. Cleaning HVAC systems equipment and piping.

D. Cleaning condensate equipment and piping.

PART 2 - PRODUCTS NOT APPLICABLE

PART 3 - EXECUTION

3.1 DUCTS AND APPARATUS

A. Thoroughly clean ducts and apparatus casings before fans are operated.

3.2 HVAC SYSTEMS AND PIPING

A. Verify coils are clean and free of debris on package units, both indoor and outdoor, prior to starting equipment.

B. Clean condensate drain piping including downstream traps.

C. Prior to final acceptance, thoroughly clean all air supply, return and exhaust modules, grilles or registers.

3.3 FACTORY FINISHES

A. Clean items with factory finishes.

B. Touch up bare places, scratches, and other minor damage to finishes. Use only factory supplied paint of matching color and formula.

C. If finishes are damaged to any extent, including but not limited to scratches and unfinished spots, refinish the entire item.

3.4 GENERAL CLEANUP

A. Upon completion of contract and progressively as work proceeds, clean up dirt, debris, oil materials, etc., and remove from site, keeping premises in neat and clean condition.

B. Stainage, discoloration or other damage to parts of the building, its finish, or furnishings due to Contractor's failure to properly clean piping systems or duct systems shall be repaired without cost to the Owner.

++ END OF SECTION ++

SECTION 15050

PIPING SYSTEMS

PART 1 - GENERAL

1.1 DESCRIPTION

A. Scope:
   1. This Section specifies systems of process piping and general requirements for piping systems. Detailed Specifications for the components listed on the Piping System Specification Sheets are found in other Sections of Division 15, Mechanical. This Section shall be used in conjunction with those Sections.
   2. Provide all labor, materials, equipment and incidentals as shown on the Drawings, specified and required to furnish, install and test all piping, fittings and specials. The Work includes, but is not limited to, the following:
      a. All types and sizes of piping, except those specified under other Sections.
      b. Piping beneath, embedded or within structures.
      c. Supports, restraints and thrust blocks.
      d. Pipe encasements.
      e. Work on or affecting existing piping.
      f. Testing.
      g. Cleaning and disinfecting.
      h. Installation of all jointing and gasket materials, specials, flexible couplings, mechanical couplings, harnessed and flanged adapters, sleeves, tie rods and all other Work required to complete the piping installation.
         1) Gasket materials shall comply with National Sanitation Foundation (NSF-61) and Arizona Administration Code requirements as stated in Specification Section 01420 – References.
      i. Incorporation of valves, meters and special items shown on the Drawings or specified into the piping systems as required and as specified in the applicable Section in Division 15, Mechanical.
      j. Unless otherwise specifically shown on the Drawings, specified, or included under other Sections, all buried piping Work required begins at the outside face of structures or structure foundations and extending away from structure.

B. Coordination:
   1. Review installation procedures under this and other Sections and coordinate with the Work that is related to this Section.

C. Definitions:

1. Pressure terms used in this Section and elsewhere in Division 15, Mechanical, are defined as follows:
    a. Maximum: The greatest continuous pressure at which piping system operates.
    b. Test: The hydrostatic pressure used to determine system acceptance.

D. Related Sections:
1. Section 02315, Earthwork, Excavation, and Backfill.
2. Section 09900, Painting.
3. Section 11295, Hydraulic Valves.
4. Section 11715, Chemical Metering Pumps and Appurtenances.
5. Section 15051, Buried Piping Installation.
6. Section 15052, Exposed Piping Installation.
7. Section 15061, Ductile Iron Pipe.
8. Section 15064, Copper Pipe.
9. Section 15065, Thermoplastic Pipe and Accessories.
10. Section 15066, Stainless Steel Pipe.
11. Section 15104, Concrete Pipe.

1.2 QUALITY ASSURANCE

A. This Section contains references to the following documents. They are a part of this Section as specified and modified. In case of conflict between the requirements of this Section and those of the listed documents, the requirements of this Section shall prevail.

B. Unless otherwise specified, references to documents shall mean the documents in effect on the effective date of the agreement. If referenced documents have been discontinued by the issuing organization, references to those documents shall mean the replacement documents issued or otherwise identified by that organization or, if there are no replacement documents, the last version of the document before it was discontinued. Where document dates are given in the following listing, references to those documents shall mean the specific document version associated with that date, whether or not the document has been superseded by a version with a later date, discontinued, or replaced.
1. AASHTO M36/M36M, Metallic (Zinc or Aluminum) Coated Corrugated Steel Culverts and Underdrains.
2. ANSI A13.1, Scheme for the Identification of Piping Systems.
3. ANSI B1.20.1, Pipe Threads, General Purpose (Inch).
4. ANSI B16.1, Cast Iron Pipe Flanges and Flanged Fittings Class 25, 125, 250, and 800.
5. ANSI B16.3, Malleable Iron Threaded Fittings Class 150 and 300.
6. ANSI B16.5, Pipe Flanges and Flanged Fittings.
7. ANSI B16.9, Factory-Made Wrought Steel Buttwelding Fittings.
8. ANSI B16.11, Forged Steel Fittings, Socket Welding and Threaded.

9. ANSI B16.12, Cast Iron Threaded Drainage Fittings.
10. ANSI B16.22, Wrought Copper and Copper Alloy Solder Joint Pressure Fittings.
11. ANSI B16.26, Cast Copper Alloy Fittings for Flared Copper Tubes.
12. ANSI B31.1, Power Piping.
13. ANSI B31.3, Chemical Plant and Petroleum Refinery Piping.
14. ASME SECTION IX, Boiler and Pressure Vessel Code; Welding and Brazing Qualifications.
15. ASTM A 47/A 47M, Specification for Ferritic Malleable Iron Castings.
16. ASTM A 53/A 53M, Specification for Pipe, Steel, Black and Hot Dipped, Zinc-Coated Welded and Seamless.
17. ASTM A 74, Specification for Cast Iron Soil Pipe and Fittings.
18. ASTM A 105/A 105M, Specification for Carbon Steel Forgings for Piping Components.
19. ASTM A 106/A 106M, Specification for Seamless Carbon Steel Pipe for High-Temperature Service.
20. ASTM A 126, Specification for Gray Iron Castings for Valves, Flanges, and Pipe Fittings.
21. ASTM A 197/A 197M, Specification for Cupola Malleable Iron.
22. ASTM A 234/A 234M, Specification for Pipe Fittings of Wrought Carbon Steel and Alloy Steel for Moderate and Elevated Temperatures.
23. ASTM A 312/A 312M, Specification for Seamless and Welded Austenitic Stainless Steel Pipe.
24. ASTM A 403/A 403M, Specification for Wrought Austenitic Stainless Steel Piping Fittings.
25. ASTM A 536, Specification for Ductile Iron Castings.
26. ASTM A 570/A 570M, Specification for Steel, Sheet and Strip, Carbon, Hot-Rolled, Structural Quality.
27. ASTM B 88, Specification for Seamless Copper Water Tube.
28. ASTM C 76, Specification for Reinforced Concrete Culvert, Storm Drain, and Sewer Pipe.
29. ASTM C 296, Specification for Asbestos-Cement Pressure Pipe.
30. ASTM C 443-REV A, Specification for Joints for Circular Concrete Sewer and Culvert Pipe, Using Rubber Gaskets.
31. ASTM C 564, Specification for Rubber Gaskets for Cast Iron Soil Pipe and Fittings.
32. ASTM D 1248, Specification for Polyethylene Plastics Molding and Extrusion Materials.
33. ASTM D 1784, Specification for Rigid Poly (Vinyl Chloride) (PVC) Compounds and Chlorinated Poly(Vinyl Chloride) (CPVC) Compounds.
34. ASTM D 2241, Specification for Poly (Vinyl Chloride) (PVC) Plastic Pipe (SDR-PR).
35. ASTM D 2513, Specification for Thermoplastic Gas Pressure Pipe, Tubing, and Fittings.

36. ASTM D 2665, Specification for Poly (Vinyl Chloride) (PVC) Plastic Drain, Waste, and Vent Pipe and Fittings.
37. ASTM D 2996, Specification for Filament-Wound Reinforced Thermosetting Resin Pipe.
38. ASTM D 3034, Specification for Type PSM Poly (Vinyl Chloride) (PVC) Sewer Pipe and Fittings.
39. ASTM D 3261, Specification for Butt Fusion Polyethylene (PE) Plastic Fittings for Polyethylene (PE) Plastic Pipe and Tubing.
40. ASTM D 3262, Specification for "Fiberglass" (Glass-Fiber-Reinforced Thermosetting-Resin) Sewer Pipe.
41. ASTM D 4174, Practice for Cleaning, Flushing, and Purification of Petroleum Fluid Hydraulic Systems.
42. ASTM D 4101, Specification for Propylene Plastic Injection and Extrusion Materials.
43. ASTM F 441, Specification for Chlorinated Poly (Vinyl Chloride) (CPVC) Plastic Pipe, Schedules 40 and 80.
44. AWWA C105, Polyethylene Encasement for Ductile-Iron Piping for Water and Other Liquids.
45. AWWA C110, Ductile-Iron and Gray-Iron Fittings, 3 Inch Through 48 Inch, for Water and Other Liquids.
46. AWWA C111, Rubber-Gasket Joints for Ductile-Iron and Gray-Iron Pressure Pipe and Fittings.
47. AWWA C115, Flanged Ductile-Iron and Gray-Iron Pipe with Threaded Flanges.
48. AWWA C151, Ductile-Iron Pipe, Centrifugally Cast in Metal Molds or Sand-Lined Molds, for Water or Other Liquids.
49. AWWA C200, Steel Water Pipe 6 Inches and Larger.
50. AWWA C205, Cement-Mortar Protective Lining and Coating for Steel Water Pipe--4 In. and Larger--Shop Applied.
51. AWWA C206, Field Welding of Steel Water Pipe.
52. AWWA C207, Steel Pipe Flanges for Waterworks Services--Sizes 4 In. through 144 In.
53. AWWA C208, Dimensions for Fabricated Steel Water Pipe Fittings.
54. AWWA C209, Cold-Applied Tape Coating for special sections, Connections, and Fittings for Steel Water Pipelines.
55. AWWA C210, Liquid Epoxy Coating Systems for the Interior and Exterior of Steel Water Pipe.
56. AWWA C214, Tape Coating Systems for the Exterior of Steel Water Pipelines.
57. AWWA C301, Pre-stressed Concrete Pressure Pipe, Steel Cylinder Type, for Water and Other Liquids.
58. AWWA C303, Reinforced Concrete Pressure Pipe-Steel Cylinder Type, Pre-tensioned, for Water and Other Liquids.

59. AWWA C600, Installation of Ductile-Iron Water Mains and Their Appurtenances.
60. AWWA C651, Disinfecting Water Mains.
61. AWWA C900, Polyvinyl Chloride (PVC) Pressure Pipe, 4 Inches through 12 Inches, for Water.
62. AWWA M11, Steel Pipe-A Guide for Design and Installation.
63. CISPI 301, specification Data for Hubless Cast Iron Sanitary System with No-Hub Pipe and Fittings.
64. FEDSPEC L-C-530 B(1), Coating, Pipe, Thermoplastic Resin or Thermosetting Epoxy.
65. MIL-H-13528B, Hydrochloric Acid, Inhibited, Rust Removing.
66. MIL-STD-810C, Environmental Test Methods.
67. SAE J1227, Assessing Cleanliness of Hydraulic Fluid Power Components and Systems.
68. National Sanitation Foundation (NSF-61) and Arizona Administration Code requirements as stated in Specification Section 01420 – References.

1.3 PRODUCT DELIVERY, STORAGE, AND HANDLING

A. Deliver materials to the site to ensure uninterrupted progress of the Work.

B. Handle all pipe, fittings, specials, and accessories carefully with approved handling devices. Do not drop or roll material off trucks. Do not otherwise drop, roll, or skid piping.

C. Store pipes and fittings on heavy wood blocking or platforms so they are not in contact with the ground.

D. Unload pipe, fittings, and specials opposite to or as close to the place where they are to be installed as is practical to avoid unnecessary handling. Keep pipe interiors completely free from dirt and foreign matter.

E. Inspect delivered pipe for cracked, gouged, chipped, dented, or other damaged material and immediately remove defective pipe from site.

PART 2 - PRODUCTS

2.1 PIPING MATERIALS

A. Unless otherwise specified, piping materials, including pipe, gaskets, fittings, connection and joint assemblies, linings, and coatings, shall be selected from those listed on the Piping System Specification Sheets.

B. Piping materials shall conform to detailed specifications for each type of pipe and piping appurtenance specified in other Sections of Division 15, Mechanical.

C. All piping shall be compatible with the fluid to which it is exposed.

2.2 PIPING IDENTIFICATION

A. Pipe Coding:
   1. Refer to Section 09900, Painting, for pipe identification in above ground installations.

B. Plastic Tracer Tape:
   1. Tracer tape shall be per MAG Section 616, colored the same as the background colors, as specified in Table A, Paragraph 3.5 of this Section.
   2. Tape shall be capable of stretching to twice its original length and shall be as manufactured by Allen Systems, W. H. Brady Co., Seton Name Plate Corporation, Marking Services, Inc., or equal.
   3. The message shall read "**CAUTION CAUTION CAUTION _____ PIPE BURIED BELOW**", with bold letters approximately 2-inches high. The blank shall be filled with the particular system fluid, such as chlorine, non-potable water line, potable water line, drain line or wastewater line. All lines shall have tracer tape.

C. Locator Tape:
   1. Detectable locator wire shall be per City of Chandler Standard Detail C-408.

2.3 VALVES

A. Valves of the same size and service shall be provided by a single valve manufacturer. Packing shall be non-asbestos material. Actual length of valves shall be within ±1/16-inch of the manufacturer's specified length. Flanges shall meet the requirement of ANSI B16.5 and conform to the requirements of Section 15052, Exposed Piping Installation. Push-on and mechanical joints shall meet the requirements of AWWA C111 and conform to the requirements of Section 15051, Buried Piping Installation. Refer to Section 11295, Hydraulic Valves, for additional requirements.

2.4 FLEXIBLE COUPLINGS

A. Not all required flexible couplings are shown on Drawings. CONTRACTOR is responsible to provide and install flexible couplings as required in addition to those shown on Drawings.

2.5 AIR – RELEASE VALVES (ARV)

A. The alignments of piping systems as shown in the Drawings may necessitate the use of air-release valves. It will be the responsibility of the CONTRACTOR to provide and install required ARVs and other appurtenances including manholes,

at all high points encountered in the routing of potable and non-potable water lines as well as other pressurized process piping.

2.6 SUBMITTALS

A. The following shall be included in all piping submittals:
   1. Shop Drawings: Submit for approval the following:
      a. A copy of this specification section, with addendum updates included, and all referenced and applicable sections, with addendum updates included, with each paragraph check-marked to indicate specification compliance or marked to indicate requested deviations from specification requirements. Check marks (✓) shall denote full compliance with a paragraph as a whole. If deviations from the specifications are indicated, and therefore requested by the CONTRACTOR, each deviation shall be underlined and denoted by a number in the margin to the right of the identified paragraph, referenced to a detailed written explanation of the reasons for requesting the deviation. The ENGINEER shall be the final authority for determining acceptability of requested deviations. The CONTRACTOR shall furnish equipment and/or services as specified if an exception and/or deviation is rejected. The remaining portions of the paragraph not underlined will signify compliance on the part of the CONTRACTOR with the specifications. Failure to include a copy of the marked-up specification sections, along with justification(s) for any requested deviations to the specification requirements, with the submittal shall be sufficient cause for rejection of the entire submittal with no further consideration.
      b. The CONTRACTOR shall submit the preventive maintenance information package as part of the shop drawing submittal package to the ENGINEER for review and approval. **SHOP DRAWING SUBMITTAL PACKAGE WILL NOT BE APPROVED WITHOUT ACCEPTANCE OF PREVENTIVE MAINTENANCE INFORMATION.**
   2. Shop Drawings:
      a. Letters of Certification of Compliance on materials, equipment, etc. for each pipe system as required in pipe material specification.
      b. Final certified drawings showing outline dimensions, foundation layout or mounting information, and other pertinent dimensions.
      c. Field erection instructions, assembly drawings and/or diagrams, detailed reference drawing lists, and lists of erection details.
      d. Shop detail drawings showing individual sub-assemblies and fabricated pieces with material specifications and other applicable data.
      e. Drawings and/or diagrams depicting proposed pipe and fittings layout, locations and quantities.
   3. O&M Manuals:
      a. Letters of Certification of Compliance on materials, equipment, etc.

b. Final certified drawings showing outline dimensions, foundation layout or mounting information, and other pertinent dimensions.
c. Field erection instructions, assembly drawings and/or diagrams, detailed reference drawing lists, and lists of erection details.
d. Shop detail drawings showing individual sub- assemblies and fabricated pieces with material specifications and other applicable data.

B. Shop Drawings shall also include the following information for all piping systems:
1. Fabrication and/or Layout Drawings:
a. Exterior Yard Piping Drawings (minimum 1-inch = 10 feet) with information, including:
1) Dimensions of piping lengths.
2) Invert or centerline elevations of piping crossings. CONTRACTOR shall provide a proposed solution if conflicts do exist.
3) Acknowledgement of bury depth requirements.
4) Details of fittings, tapping locations, thrust blocks, restrained joint segments, harnessed joint segments, hydrants, and related appurtenances.
5) Acknowledge designated valve or gate tag numbers, manhole numbers, instrument tag numbers, pipe, and line numbers.
6) Line slopes and vents.
7) Electrical duct bank locations shall be provided in the Drawings. CONTRACTOR shall provide a proposed solution if conflicts do exist.
b. Interior Piping Drawings (minimum scale 1/8-inch = 1 foot), with information, including:
1) Dimensions of piping from column lines or wall surfaces.
2) Centerline dimensions of piping.
3) Centerline elevation and size of intersecting ductwork, conduit/conduit racks, or other potential interferences requiring coordination.
4) Location and type of pipe supports and anchors.
5) Locations of valves and valve actuator type.
6) Details of fittings, tapping locations, equipment connections, flexible expansion joints, connections to equipment, and related appurtenances.
7) Acknowledgement of valve, equipment, and instrument tag numbers.
8) Provisions for expansion and contraction.
9) Line slopes and air release vents.
10) Rough-in data for plumbing fixtures.
c. Product Technical Data, including:
1) Acknowledgement that products submitted meet requirements of standards referenced.

2) Copies of manufacturer's written directions regarding material handling, delivery, storage, and installation.
3) Separate schedule sheet for each piping system scheduled in this Section showing compliance of all system components. Attached technical product data on gaskets, pipe, fittings, and other components.

d. Qualifications:
1) Qualifications of lab performing disinfection analysis on water systems.

e. Test Reports:
1) Copies of pressure test results on all piping systems.
2) Reports defining results of dielectric testing and corrective action taken.
3) Disinfection test report.
4) 24 hour notification of time and date prior to conducting piping pressure tests.

C. All additional Submittal information shall be included with this Submittal information as noted in the Division 15, Mechanical, Pipe Material Specifications.

PART 3 - EXECUTION

3.1 INSTALLATION

A. Location:
1. Piping shall be provided as specified, except for adjustments to avoid architectural and structural features, and shall be coordinated with electrical construction.

B. Piping Sizes:
1. Where the size of piping is not specified, the CONTRACTOR shall provide piping of the sizes required by UPC. Unless specified otherwise, small piping (less than 1-inch in diameter) required for services not described by UPC shall be 1/2-inch.

C. Pipe Support, Anchorage, and Seismic Bracing:
1. Piping shall be supported by anchor brackets, guides, saddles, or hangers.
2. Acceptable types of supports, guides, saddles, hangers, and structure attachments for general pipe support, expansion/contraction, and for seismic bracing, as well as anchorage details, are shown on the Drawings.
3. Minimum spacing shall be as specified for supports and for seismic bracing.
4. Where a specific type of support or anchorage is indicated on the Drawings, only that type shall be used there.
5. Piping shall be vertically supported by anchor brackets, guides, saddles, or hangers and shall be seismically braced where indicated to resist lateral load.

6. Supports shall be provided on each run at each change of direction.
7. Pipe supports shall be hot-dip or mechanically galvanized or as indicated on the Drawings
8. Unless otherwise specified, existing pipes and supports shall not be used to support new piping.
9. All piping in chemical shall use pipe supports as referenced in Section 11715, Chemical Metering Pumps and Appurtenances.

D. Anchorage for Buried Piping:
   1. All plugs, caps, tees, and bends in buried pressure piping systems shall be anchored by means of restrained joints.

E. Bedding and Backfill:
   1. Bedding and backfill for all pipes shall conform with Section 02315, Earthwork, Excavation, and Backfill, and Section 15051, Buried Piping Installation.
   2. All piping, at a minimum, shall be backfilled with a 4-inch thick bedding layer below the pipe, extending to a height equal to 1 foot above the top of the pipe.
   3. The bedding and backfill operations shall, at minimum, follow the Maricopa Association of Government (MAG) guidelines.

3.2 PIPING IDENTIFICATION

A. Pipe Coding:
   1. After application of the specified coating and insulation systems, exposed piping, interior and exterior, and piping in ceiling spaces, pipe trenches, pipe chases, and valve boxes shall be identified with plastic markers, as specified in Paragraph 2.2.A of this Section.
   2. Legend markers and directional arrows shall be located at each side of walls, floors, and ceilings, at one side of each piece of equipment, at piping intersections, and at approximately 50 foot centers.

B. Plastic Tracer Tape:
   1. A single line of tape, as specified in Paragraph 2.2.B of this Section, shall be provided 2-1/2 feet above the centerline of buried pipe.
   2. For pipelines buried 8 feet or greater below finished grade, CONTRACTOR shall provide a second line of tape 12-inches below finished grade, above and parallel to each buried pipe.
   3. Tape shall be spread flat with message side up before backfilling.

C. Locator Tape:
   1. Detectable locator wire shall be per City of Chandler Standard Detail C-408.

3.3 TESTING

A. General:
   1. Upon completion of piping, but prior to application of insulation on exposed piping, the CONTRACTOR shall test the piping systems in accordance with the appropriate MAG Specifications. Pressures, media, and test durations shall be as specified in the Section 15051, Buried Piping Installation and 15052 Exposed Piping Installation. Equipment which may be damaged by the specified test conditions shall be isolated. Testing shall be performed using calibrated test gauges and calibrated volumetric measuring equipment to determine leakage rates. Each test gauge shall be selected so that the specified test pressure falls within the upper half of the gauge's range. Unless otherwise specified, the CONTRACTOR shall notify the Construction Manager 24 hours prior to each test.
   2. Unless otherwise specified, testing, as specified herein, shall include existing piping systems which connect with new pipe systems. Existing pipe shall be tested to the nearest existing valve.
   3. All piping shall be tested at the pressure values listed in the Section 15051, Buried Piping Installation, and 15052 and Exposed Piping Installation.
   4. Pressure and leakage testing for water systems shall be in accordance with MAG Section 611. Unless otherwise specified, leakage from other buried liquid piping systems shall be less than 0.02 gallons per hour per inch diameter per 100 feet of buried piping.
   5. Building Drains:
      a. Drain systems, other than pumped drain systems, shall be tested in accordance with UPC.

3.4 CLEANING AND FLUSHING

A. General:
   1. Piping systems shall be cleaned following completion of testing and prior to connection to operating, control, regulating, or instrumentation equipment.
   2. The CONTRACTOR may, at his option, clean and test sections of buried or exposed piping systems. Use of this procedure, however, will not waive the requirement for a full pressure test of the completed system.
   3. CONTRACTOR may propose alternate disinfection methods in writing for review and approval, on a case-by-case basis, prior to installation.
   4. Unless specified otherwise, piping 24-inches in diameter and smaller shall first be cleaned by pulling a tightly fitting cleaning ball or swab through the system.
   5. Piping larger than 24-inches in diameter may be cleaned manually or with a cleaning ball or swab.

B. Liquid Systems:

1. After completion of cleaning, liquid systems, unless otherwise specified, shall be flushed with clean water.

C. Water Systems:
   1. Potable water piping systems shall be flushed and disinfected in accordance with AWWA C651 and MAG Section 611.
   2. For non-potable water systems, final flushing and microbiological testing, as specified in MAG Section 611.15, is not required.

3.5 PIPING SPECIFICATION SHEETS (PIPESPEC)

A. Piping and valves for groupings of similar plant processes or types of service lines are specified on individual Piping Specification Sheets (PIPESPECS). Piping services are grouped according to the chemical and physical properties of the fluid conveyed and/or by the temperature or pressure requirements. Piping services specified in the PIPESPECS and on the Drawings are alphabetically arranged by designated service symbols, as shown in Table A. Table A also indicates the system symbol, fluid category, and pipe marker background color of each service.

(The remainder of this page is left intentionally blank)

TABLE A - PIPING SERVICES (RWIF)		
Symbol	**Service**	**Fluid Category**
A	AIR	AIR
ACH	ALUMINUM CHLOROHYDRATE	LIQUID
BPW	BACKPULSE WATER	LIQUID
CA	CITRIC ACID	LIQUID
CAS	SODIUM HYDROXIDE	LIQUID
CIP	CLEAN IN PLACE	LIQUID
D	DRAIN	LIQUID
IA	INSTRUMENT COMPRESSED AIR	AIR
NPW	NON-POTABLE WATER	LIQUID
PM	MEMBRANE PERMEATE WATER	LIQUID
POT	POTABLE WATER	LIQUID
SA	SULFURIC ACID	LIQUID
SBS	SODIUM BISULFITE	LIQUID
SHY	SODIUM HYPOCHLORITE	LIQUID
SLM	SAMPLE LINE	LIQUID
SW	SURFACE WATER	LIQUID

(The remainder of this page intentionally left blank)

Service	Pipe Material	Gasket	
		Flange	Push-on
A	SST	Neoprene binder gasket suitable for compressed air application and continuous maximum temperature of 400 degrees Fahrenheit, Garlock Blue-Gard Style 3800 or approved equal	N/A
ACH	CPVC	PTFE bonded EPDM, full face gaskets, ANSI B16.1, Garlock Grylon 3504, or approved equal.	N/A
BPW	DIP	Neoprene Rubber Gasket Material	Nitrile or Neoprene
CA	CPVC	PTFE bonded EPDM, full face gaskets, ANSI B16.1, Garlock Grylon 3504, or approved equal.	N/A
CAS	CPVC	PTFE bonded EPDM, full face gaskets, ANSI B16.1, Garlock Grylon 3504, or approved equal.	N/A
CIP	DIP	Red Rubber Gasket Material (SBR) conforming to ASTM D1330	Nitrile or Neoprene
D	PVC	N/A	Nitrile or Neoprene
D	DIP	Neoprene Rubber Gasket Material	Nitrile or Neoprene
HCL	CPVC	PTFE bonded EPDM, full face gaskets, ANSI B16.1, Garlock Grylon 3504, or approved equal.	N/A
IA	SST	Neoprene binder gasket suitable for compressed air application and continuous maximum temperature of 400 degrees Fahrenheit, Garlock Blue-Gard Style 3800 or approved equal	N/A
IA	COP	N/A	N/A
PM	SST	See Spec.	See Spec.
PM	DIP	Neoprene Rubber Gasket Material	Nitrile or Neoprene
POT	DIP	Red Rubber Gasket Material (SBR) conforming to ASTM D1330	Nitrile or Neoprene
SA	CPVC	PTFE bonded EPDM, full face gaskets, ANSI B16.1, Garlock Grylon 3504, or approved equal.	N/A
SBS	CPVC	PTFE bonded EPDM, full face gaskets, ANSI B16.1, Garlock Grylon 3504, or approved equal.	N/A
SHY	CPVC	PTFE bonded EPDM, full face gaskets, ANSI B16.1, Garlock Grylon 3504, or approved equal.	N/A
SW	DIP	Red Rubber Gasket Material (SBR) conforming to ASTM D1330	Nitrile or Neoprene

Service	Pipe Material	Gasket	
		Flange	Push-on
SW	RGRCP	N/A	Rubber Gasket per ASTM C443

(The remainder of this page intentionally left blank)

Exposed Pipe and Fitting

Service	Diameter	Pipe	Connections	Fittings	Spec
A	12-inches and smaller	Stainless Steel	See Spec.	See Spec.	15066
ACH	1-inch and smaller	CPVC Schedule 80	Solvent Weld. Flange adapters where called for on drawings.	CPVC, Schedule 80, Solvent weld	15065
BPW	16-inches and smaller	Ductile Iron, AWWA C151, Protecto 401 lining	Flanged	Coating, lining and ends to match pipe	15061
CA	3-inches and smaller	CPVC, Schedule 80	Solvent Weld. Flange adapters where called for on drawings.	CPVC, Schedule 80, Solvent weld	15065
CAS	3-inches and smaller	CPVC, Schedule 80	Solvent Weld. Flange adapters where called for on drawings.	CPVC, Schedule 80, Solvent weld	15065
D	6-inches and smaller	CPVC Schedule 80	Solvent Weld. Flange adapters where called for on drawings.	CPVC, Schedule 80, Solvent weld	15065
	4-inches and larger	Ductile Iron, AWWA C151, Protecto 401 lining	Flanged	Coating, lining and ends to match pipe	15061
HCL	3-inches and smaller	CPVC, Schedule 80	Solvent Weld. Flange adapters where called for on drawings.	CPVC, Schedule 80, Solvent weld	15065
IA	1 inch and smaller	See Spec.	See Spec.	See Spec.	11372
PM	2-inches and smaller	Copper Tube, ASTM B88, Type K, annealed or drawn	Solder type with threaded or flanged adapters for valves	Wrought copper or bronze, ANSI b16.22	15064
	24-inches and smaller	Ductile Iron, AWWA C151, Protecto 401 lining	Flanged	Coating, lining and ends to match pipe	15061
	24-inches and smaller	Stainless Steel	See Spec.	See Spec.	15066
POT	2-inches and	Copper Tube, ASTM	Solder type with	Wrought copper	15064

Service	Diameter	Pipe	Connections	Fittings	Spec
	smaller	B88, Type K, annealed or drawn	threaded or flanged adapters for valves	or bronze, ANSI b16.22	
SBS	3-inches and smaller	CPVC, Schedule 80	Solvent Weld. Flange adapters where called for on drawings.	CPVC, Schedule 80, Solvent weld	15065
SHY	3-inches and smaller	CPVC, Schedule 80	Solvent Weld. Flange adapters where called for on drawings.	CPVC, Schedule 80, Solvent weld	15065
SLM	1 inch	Polyvinyl Chloride (PVC), SDR 26	Restrained push-on rubber gasket joint.	Coating, lining and ends to match pipe	15065
SW	2-inches and smaller	Copper Tube, ASTM B88, Type K, annealed or drawn	Solder type with threaded or flanged adapters for valves	Wrought copper or bronze, ANSI b16.22	15064
	18-inches and larger	Ductile Iron, AWWA C151, Protecto 401 lining	Flanged	Coating, lining and ends to match pipe	15061

(The remainder of this page intentionally left blank)

Exposed Valves

Service	Diameter	Valves	Type	Spec
POT	2-inches and Smaller	Check	See Spec.	11295
POT	1 ½-inch and larger	Ball	See Spec.	11295
D	2-inches	Ball	Jamesbury Fig. 351, Nibco T-580, Equal	11295
	14 inches and larger	Butterfly	See Spec.	11295
	4-inches	Ball	See Spec.	11295
A	12 inches	Butterfly	See Spec.	11295
SW	18-inches and larger	Butterfly	See Spec.	11295
	18-inches	Swing Check	See Spec.	11295
IA	1 inch	Ball	Jamesbury Fig. 351,Nibco T-580,Equal	11295
	1/2 inch	Solenoid	See Spec.	11295
	1 inch	Check	See Spec.	11295
PM	4-inches and larger	Butterfly	See Spec.	11295
	12-inches	Swing Check	See Spec.	
CIP	14-inches	Butterfly	See Spec.	11295
	3-inches and smaller	Ball	See Spec.	11295
SHY	2-inches and smaller	Ball Check	See Spec.	11295
	2-inches and smaller	Ball	Jamesbury Fig. 351,Nibco T-580,Equal	11295
	1.5-inches and smaller	Check	See Spec.	11295
CA	2-inches and smaller	Ball Check	See Spec.	11295
	2-inches and smaller	Ball	Jamesbury Fig. 351,Nibco T-580,Equal	11295
	1.5-inches and smaller	Check	See Spec.	11295
CAS	2-inches and smaller	Ball Check	See Spec.	11295
	2-inches and smaller	Ball	Jamesbury Fig. 351,Nibco T-580,Equal	11295
	1.5-inches and smaller	Check		11295

			See Spec.	
SA	2-inches and smaller	Ball Check	See Spec.	11295
	2-inches and smaller	Ball	Jamesbury Fig. 351,Nibco T-580,Equal	11295
	1.5-inches and smaller	Check	See Spec.	11295
SBS	2-inches and smaller	Ball Check	See Spec.	11295
	2-inches and smaller	Ball	Jamesbury Fig. 351,Nibco T-580,Equal	11295
	1.5-inches and smaller	Check	See Spec.	11295
ACH	2-inches and smaller	Ball Check	See Spec.	11295
	2-inches and smaller	Ball	Jamesbury Fig. 351,Nibco T-580,Equal	11295
	1.5-inches and smaller	Check	See Spec.	11295

Buried Pipe and Fitting

Service	Diameter	Pipe	Connections	Fittings	Spec
A	12-inches	Stainless Steel	See Spec.	See Spec.	15066
D	6-inches and smaller	Polyvinyl Chloride (PVC), SDR 26	Restrained push-on rubber gasket joint.	N/A	15065
	4-inches and larger	Ductile Iron, AWWA C151, Protecto 401 lining	Mechanical Joint	Coating, lining and ends to match pipe	15061
	6-inches and smaller	Schedule 80 Chlorinated Polyvinyl Chloride (CPVC)	Solvent weld. Flange adapters where called for on drawings.	To match pipe	15065
IA	1 inch	See Spec.	See Spec.	See Spec.	11372
PM	12-inches and larger	Ductile Iron, AWWA C151, Protecto 401 lining	Mechanical Joint	Coating, lining and ends to match pipe	15061
BPW	16-inches and smaller	Ductile Iron, AWWA C151, Protecto 401 lining	Mechanical Joint	Coating, lining and ends to match pipe	15061
CIP	12-inches	Ductile Iron, AWWA C151, Protecto 401 lining	Mechanical Joint	Coating, lining and ends to match pipe	15061
POT	6-inches and larger	Ductile Iron, AWWA C151, cement mortar lining	Restrained push-on rubber gasket joint. Flanged adapters for valves and ends.	Coating, lining and ends to match pipe	15061
	2-inches and smaller	Copper Tube, ASTM B88, Type K, annealed or drawn	Solder type with threaded or flanged adapters for valves	Wrought copper or bronze, ANSI b16.22	15064
SW	24-inches	Ductile Iron, AWWA C151, Protecto 401 lining	Mechanical Joint	Coating, lining and ends to match pipe	15061
	24-inches	Rubber Gasket Reinforced Concrete Pipe (RGRCP), Class III	Restrained push-on rubber gasket joint.	To match pipe	15104
SLM	1 inch	Polyvinyl Chloride (PVC), SDR 26	Restrained push-on rubber gasket joint.	N/A	15065

Buried Valves

Service	Diameter	Valves	Type	Spec
POT	1 inch and larger	Gate	See Spec.	11295

++ END OF SECTION ++

SECTION 15051

BURIED PIPING INSTALLATION

PART 1 - GENERAL

1.1 SUMMARY

A. Scope:
   1. CONTRACTOR shall provide all labor, materials, equipment, and incidentals as shown, specified, and required to install and test all buried piping, fittings, and specials. The Work includes, but is not limited to, the following:
      a. Excavation and backfill.
      b. All temporary means required to prevent discharge of sediment to water courses from dewatering systems or erosion.
      c. All types and sizes of buried piping, except those specified under other Sections.
      d. Piping beneath structures.
      e. Restraints and thrust blocks.
      f. Pipe encasements.
      g. Work on or affecting existing piping.
      h. Testing.
      i. Cleaning and disinfecting.
      j. Installation of all jointing and gasketing materials, specials, flexible couplings, mechanical couplings, harnessed and flanged adapters, sleeves, tie rods, and all other Work required to complete the buried piping installation.
      k. Incorporation of valves, meters and special items shown on the Drawings or specified into the piping systems as required and as specified in the applicable Sections in Division 15, Mechanical.
      l. Unless otherwise specifically shown on the Drawings, specified, or included under other Sections, all buried piping Work required, beginning at the outside face of structures or structure foundations and extending away from structure.
   2. No classification of excavated materials will be made. Excavation includes all materials regardless of type, character, composition, moisture, or condition thereof.

B. Coordination:
   1. Review installation procedures under other Sections and coordinate with the Work that is related to this Section.
   2. Section 15051, Buried Piping Installation, specifies the installation of all buried piping materials specified in Sections of Division 15, Mechanical. Coordinate with these Sections.

1.2 RELATED SECTIONS

A. Section 02315, Earthwork, Excavation and Backfill.

B. Section 11295, Hydraulic Valves.

C. Section 15050, Piping Systems.

D. Section 15061, Ductile Iron Pipe.

E. Section 15064, Copper Pipe.

F. Section 15065, Thermoplastic Pipe and Accessories.

G. Section 15066, Stainless Steel Pipe.

H. Section 15104, Concrete Pipe.

I. Section 15120, Piping Specialties and Accessories.

1.3 QUALITY ASSURANCE

A. CONTRACTOR shall conform to all applicable requirements of Parts 600 and 700 of the Uniform Standard Specifications for Public Work Construction by the Maricopa Association of Governments (MAG). If there is a conflict between MAG Standard Specifications and these Specifications, the provisions of these Specifications shall govern.

B. Requirements of Regulatory Agencies:
   1. Comply with requirements of NFPA Standard No. 24 for "Outside Protection" where applicable to water pipe systems used for fire protection.
   2. Comply with requirements of UL, FM, and other jurisdictional authorities, where applicable.
   3. Refer to the General and Supplementary Conditions regarding permit requirements for this Work.
   4. Applicable building codes.

C. Reference Standards: Comply with applicable provisions and recommendations of the following, except as otherwise shown or specified.
   1. ASTM D2321, Practice for Underground Installation of Flexible Thermoplastic Pipe.
   2. ASTM D2774, Practice for Underground Installation of Thermoplastic Pressure Piping.
   3. AWWA C105, Polyethylene Encasement for Ductile Iron Piping for Water and Other Liquids.
   4. AWWA C111, Rubber Gasket Joints for Ductile Iron Pressure Pipe and Fittings.

5. AWWA C200, Steel Water Pipe.
6. AWWA C205, Cement Mortar Protective Lining and Coating for Steel Water Pipe.
7. AWWA C206, Field Welding of Steel Water Pipe.
8. AWWA C207, Steel Pipe Flanges for Waterworks Service.
9. AWWA C208, Dimensions for Fabricated Steel Water Pipe Fittings.
10. AWWA C600, Installation of Ductile Iron Water Mains and Their Appurtenances.
11. AWWA C606, Grooved and Shouldered Joints.
12. AWWA C651, Disinfecting Water Mains.
13. AWWA M11, Steel Pipe - A Guide for Design and Installation.
14. AWWA M23, PVC - Design and Installation.
15. AWWA M41, Ductile Iron Pipe and Fittings.
16. ASCE MOP No. 37, Design and Construction of Sanitary and Storm Sewers.
17. Concrete Pipe Handbook, American Concrete Pipe Association.

1.4 SUBMITTALS

A. Shall be in accordance with Section 15050, Piping Systems submittal information.

B. Shop Drawings: Submit for approval the following:
   1. A copy of this specification section, with addendum updates included, and all referenced and applicable sections, with addendum updates included, with each paragraph check-marked to indicate specification compliance or marked to indicate requested deviations from specification requirements. Check marks (✓) shall denote full compliance with a paragraph as a whole. If deviations from the specifications are indicated, and therefore requested by the CONTRACTOR, each deviation shall be underlined and denoted by a number in the margin to the right of the identified paragraph, referenced to a detailed written explanation of the reasons for requesting the deviation. The ENGINEER shall be the final authority for determining acceptability of requested deviations. The CONTRACTOR shall furnish equipment and/or services as specified if an exception and/or deviation is rejected. The remaining portions of the paragraph not underlined will signify compliance on the part of the CONTRACTOR with the specifications. Failure to include a copy of the marked-up specification sections, along with justification(s) for any requested deviations to the specification requirements, with the submittal shall be sufficient cause for rejection of the entire submittal with no further consideration.
   2. The CONTRACTOR shall submit the preventive maintenance information package as part of the shop drawing submittal package to the ENGINEER for review and approval. **SHOP DRAWING SUBMITTAL PACKAGE WILL NOT BE APPROVED WITHOUT ACCEPTANCE OF PREVENTIVE MAINTENANCE INFORMATION.**

1.5 PRODUCT DELIVERY, STORAGE, AND HANDLING

A. Deliver materials to the site to ensure uninterrupted progress of the Work.

B. Handle all pipe, fittings, specials, and accessories carefully with approved handling devices. Do not drop or roll material off trucks. Do not otherwise drop, roll, or skid piping.

C. Store pipes and fittings on heavy wood blocking or platforms so they are not in contact with the ground.

D. Unload pipe, fittings, and specials opposite to or as close to the place where they are to be installed as is practical to avoid unnecessary handling. Keep pipe interiors completely free from dirt and foreign matter.

E. Inspect delivered pipe for cracked, gouged, chipped, dented, or other damaged material and immediately remove defective pipe from site.

PART 2 - PRODUCTS

2.1 MATERIALS

A. Required pipe materials are listed in the Piping Schedule. Refer to applicable Sections for Material Specifications.

B. General:
   1. Marking Piping:
      a. Clearly mark each piece of pipe or fitting with a designation conforming to those shown on the laying schedule and/or Shop Drawings.
      b. Cast or paint material, type, and pressure designation on each piece of pipe or fitting 4-inches in diameter and larger. Each piece of steel pipe shall be clearly marked with the thickness of the steel in the pipe wall.
      c. Pipe and fittings smaller than 4-inches in diameter shall be clearly marked by manufacturer as to material, type, and rating.

PART 3 - EXECUTION

3.1 INSTALLATION

A. General:
   1. Installation of all pipe, fittings, valves, specials, and appurtenances shall be subject to the review and/or approval of the ENGINEER.
   2. Install piping as shown, specified, and as recommended by the manufacturer and in conformance with referenced standards and approved Shop Drawings.
   3. Request instructions from ENGINEER before proceeding if there is a conflict between the manufacturer's recommendations and the Contract Documents.

4. All piping shall be inspected by the ENGINEER prior to installation. ENGINEER'S inspection will not relieve CONTRACTOR or manufacturer from responsibility for damaged products.
5. All piping shall be carefully examined for cracks, damage, or other defects before installation. Any piping that is defective, including, but not limited to, cracked, damaged, in poor condition, or with damaged linings or improper markings shall be rejected, unless the product can be repaired in a manner acceptable to the manufacturer and ENGINEER. Any piping found to be broken or defective after it has been installed shall be removed, replaced, or repaired at the CONTRACTOR'S expense.
6. Minimum earth cover over the piping shall be as shown on the Drawings, specified, or directed by the ENGINEER, but in no case shall the earth cover be less than 4 feet for all piping, except drains.
7. Required earthwork shall be as specified in applicable Sections of Division 2, Sitework.
8. Present all conflicts between piping systems and equipment, structures, or facilities to ENGINEER for determination of corrective measures before proceeding.
9. Take field measurements, where required, prior to installation to ensure proper fitting of Work. The CONTRACTOR shall uncover the existing pipelines sufficiently in advance of the proposed Work in order that the type and location of the existing pipes and joints and other information required to fabricate the proposed piping can be determined. It shall be the responsibility of the CONTRACTOR to obtain whatever information is required to complete the connections of the proposed pipelines to the existing pipelines. Refer to Paragraph 3.3 of this Section, as applicable.
10. Interior of all piping and mating surfaces shall be inspected and all dirt, gravel, sand, debris, or other foreign material shall be completely removed from the interior and mating surfaces before installation. Measures shall be taken to maintain the interior of all piping clean until acceptance of the completed Work. Care shall be taken to prevent foreign matter from entering joint space. Bell and spigot mating surfaces shall be wiped clean immediately before piping is laid. For ductile iron pipe, the bell and spigot mating surfaces shall be thoroughly cleaned with a wire brush.
11. Install piping accurately to line and grade shown, specified, or directed, unless otherwise approved by the ENGINEER. Accurate means of determining and checking the alignment and grade shall be used, which shall be subject to the approval of the ENGINEER. Any modifications to the Contract Documents to suit the pipe manufacturer's standard shall be approved by the ENGINEER. Remove and relay piping that is incorrectly installed, at CONTRACTOR'S expense.
12. Do not lay piping in water unless otherwise specified in these Specifications or approved by the ENGINEER. Ensure that the water level in the trench is at least 6-inches below the bottom of piping. Maintain a dry trench until jointing and backfilling are complete unless otherwise specified in these Specifications or approved by the ENGINEER.

13. Where unforeseen conditions will not permit the installation of piping as shown or specified, no piping shall be installed without approval of the ENGINEER. Do not modify structures or facilities without approval of the ENGINEER.
14. Start laying piping at lowest point and proceed toward the higher elevations, unless otherwise approved by the ENGINEER. Slope piping uniformly between elevations shown on the Drawings or as otherwise directed by the ENGINEER.
15. Place bell and spigot piping so that the bells face the direction of laying, unless otherwise approved by the ENGINEER.
16. Piping shall be installed so that the barrel of the piping, and not the joints, receives the bearing pressure from the trench bottom or other bedding condition.
17. No piping shall be brought into position until the preceding length, valve, fitting, or special has been bedded and secured in place.
18. Whenever pipe laying is not actively in progress, the open ends of the piping shall be closed by a temporary plug or cap to prevent soil, water, and other foreign matter from entering the piping.
19. Field cutting of metallic piping, where required for inserting valves, fitting, specials, and closures, shall be made with a machine specially designed for cutting piping and in accordance with the manufacturer's instructions. Cuts shall be carefully done, without damage to piping, so as to leave a smooth end at right angles to the axis of the piping. Cut end shall be tapered and sharp edges filed off smooth. Flame cutting shall not be permitted. Piping damaged by the CONTRACTOR by improper or careless methods of cutting shall be replaced or repaired at his expense.
20. Blocking under piping shall not be permitted, unless specifically approved by ENGINEER for special conditions.
21. Protective linings and coatings shall be touched up prior to installation, where required.
22. Except where bends, wyes, or similar fittings are used, changes in alignment and grade of the piping shall be made by deflecting joints or with beveled pipe. Permissible joint deflection shall not exceed 75% of the amount allowed by the manufacturer.
23. All joints shall be made in the presence of the ENGINEER, or his duly authorized representative, except as otherwise approved.
24. Special care shall be taken to ensure that each section of piping abuts against the next in such a manner that there will be no shoulder or unevenness of any kind along the piping invert.
25. Piping shall be rotated as required to place outlets in proper position.
26. Blind flanges and cleanouts shall be provided at locations shown on the Drawings, specified, or required. Cleanouts on buried piping shall include all pipe, fittings, and appurtenances required to bring cleanout to finished grade and terminate in a flange and blind flange or suitably capped piping as shown. Cleanout piping shall be same as that specified for the main run.

27. All gravity lines shall pitch uniformly at the grade shown or as specified or approved.
28. Short pipe stubs, maximum 4 feet in length, shall be used at all manholes and other wall faces, except as otherwise specified.
29. Field painting shall be accomplished after joints are made.
30. All piping shall be plugged watertight with a suitable cap or plug securely fastened to the end of the piping at all contact interfaces.
31. CONTRACTOR shall notify ENGINEER in advance of backfilling operations.
32. On steep slopes, take measures acceptable to ENGINEER to prevent movement of the pipe during installation.
33. Thrust Restraint: During the installation of the pipe, thrust blocks, tied joints, or proprietary restrained joint systems shall be provided wherever required for thrust restraint. Thrust restraint shall conform to the applicable requirements of Paragraph 3.2 of this Section.
34. Exercise care to avoid flotation when installing pipe in cast-in-place concrete.

B. Manufacturer's Installation Specialist:
   1. The CONTRACTOR is required to provide the services of the pipe manufacturer when pipe installation begins for the following:
      a. Fiberglass reinforced plastic pipe.
   2. Provide the services of a competent installation specialist of the pipe manufacturer when pipe laying begins if the CONTRACTOR is not experienced in laying and jointing a particular type of pipe.
   3. Retain installation specialist at the site for a minimum of two days or until competency of the pipe laying crew has been satisfactorily demonstrated.

C. Separation of Sewers and Potable Water Pipe Lines:
   1. Conform to all applicable separation requirements of the Uniform Standard Specifications for Public Work Construction by the Maricopa Association of Governments (MAG).

D. Plugs:
   1. Temporarily plug installed pipe at the end of each day's Work or other interruption to the installation of any pipe line. Plugging shall prevent the entry of animals, liquids, or persons into the pipe or the entrance or insertion of deleterious materials.
   2. Install standard plugs into all bells at dead ends, tees, or crosses. Cap all spigot ends.
   3. Fully secure and block all plugs and caps installed for pressure testing to withstand the specified test pressure.
   4. Where plugging is required for phasing of the Work or for subsequent connection of piping, install watertight, permanent type plugs.

E. Bedding Pipe: Bed pipe as specified below and in accordance with the details shown.

1. Trench excavation and backfill and bedding materials shall conform to the requirements of Section 02315, Earthwork, Excavation and Backfill, as applicable.
2. Excavate trenches below the pipe bottom by an amount specified. Remove all loose and unsuitable material from the trench bottom.
3. Carefully and thoroughly compact all pipe bedding with hand held pneumatic compactors.
4. Do not lay pipe until the ENGINEER approves the bedding condition. If a conflict exists, obtain clarification from ENGINEER before proceeding.
5. No pipe shall be brought into position until the preceding length has been bedded and secured in its final position.

F. Laying Pipe:
   1. Conform to manufacturer's instructions and requirements of the standards listed below, where applicable:
      a. Ductile Iron Pipe: AWWA C600, AWWA C105.
      b. Thermoplastic Pipe: ASTM D2774.
      c. Concrete Pipe: AWWA M9, Concrete Pipe Handbook.
      d. ASCE Manual of Practice No. 37.

G. Polyethylene Encasement:
   1. Provide polyethylene encasement for ductile iron piping to prevent contact between the pipe and surrounding bedding material and backfill.
   2. Polyethylene may be supplied in tubes or in sheet material.
   3. Polyethylene encasement materials and installation shall be in accordance with the requirements of MAG Section 610.5.

H. Jointing Pipe:
   1. Ductile Iron Mechanical Joint Pipe:
      a. Wipe clean the socket, plain end, and adjacent areas immediately before making joint. Make certain that cut ends are tapered and sharp edges are filed off smooth.
      b. Lubricate the plain ends and gasket with soapy water or an approved pipe lubricant, in accordance with AWWA C111, just prior to slipping the gasket onto the plain end of the joint assembly.
      c. Place the gland on the plain end with the lip extension toward the plain end, followed by the gasket with the narrow edge of the gasket toward the plain end.
      d. Insert the pipe into the socket and press the gasket firmly and evenly into the gasket recess. Keep the joint straight during assembly.
      e. Push gland toward socket and center it around pipe with the gland lip against the gasket.
      f. Insert bolts and hand tighten nuts.
      g. Make deflection after joint assembly, if required, but prior to tightening bolts. Alternately tighten bolts 180 degrees apart to seat the gasket evenly. The bolt torque shall be as follows:

Pipe Size (inches)	Bolt Size (inches)	Range of Torque
3	5/8	45-60
4-24	3/4	75-90

h. All bolts and nuts shall be heavily coated with two 10 mil, minimum, coats of coal-tar epoxy coating as manufactured by Koppers, Tnemec, or equal.
i. Restrained mechanical joints shall be in accordance with Section 15061, Ductile Iron Pipe.

2. Ductile Iron Push-On Joint Pipe:
   a. Prior to assembling the joints, the last 8-inches of the exterior surface of the spigot and the interior surface of the bell shall be thoroughly cleaned with a wire brush, except where joints are lined or coated with a special protective lining or coating.
   b. Rubber gaskets shall be wiped clean and flexed until resilient. Refer to manufacturer's instructions for procedures to ensure gasket resiliency when assembling joints in cold weather.
   c. Insert gasket into joint recess and smooth out the entire circumference of the gasket to remove bulges and to prevent interference with the proper entry of the spigot of the entering pipe.
   d. Immediately prior to joint assembly, apply a thin film of approved lubricant to the surface of the gasket which will come in contact with the entering spigot end of pipe. CONTRACTOR may, at his option, apply a thin film of lubricant to the outside of the spigot of the entering pipe.
   e. For assembly, center spigot in the pipe bell and push pipe forward until it just makes contact with the rubber gasket. After gasket is compressed and before pipe is pushed or pulled all the way home, carefully check the gasket for proper position around the full circumference of the joint. Final assembly shall be made by forcing the spigot end of the entering pipe past the rubber gasket until it makes contact with the base of the bell. When more than a reasonable amount of force is required to assemble the joint, the spigot end of the pipe shall be removed to verify the proper positioning of the rubber gasket. Gaskets which have been scoured or otherwise damaged shall not be used.
   f. Maintain an adequate supply of gaskets and joint lubricant at the site at all times when pipe jointing operations are in progress.
3. Proprietary Joints:
   a. Pipe which utilizes proprietary joints such as Fastite, by American Cast Iron Pipe Company, Tyton by U.S. Pipe Incorporated, restrained joints described under Paragraph 3.2 of this Section, or other such joints shall be installed in strict accordance with the manufacturer's instructions.
4. Rubber Gasket Reinforced Concrete Pipe:
   a. Immediately before making the joint, completely clean the bell and spigot surfaces to be jointed.

b. Apply a lubricant supplied by the pipe manufacturer to the sealing surfaces of the bell and spigot and the gasket. After lubrication, install the gasket in the spigot groove and ensure that the stretch in the gasket is equalized.
c. After the pipe is lowered into place, align the spigot and bell so that the spigot will squarely enter the bell.
d. Before the joint is fully assembled, check the position of the gasket in the bell using methods recommended by the pipe manufacturer and approved by the ENGINEER.
e. If the gasket is found to be in the correct position around the entire circumference of the bell, remove temporary joint stoppers, if used, and shove the pipe completely home. If the gasket is not in the proper location, the joint shall be opened and reinstalled using a new gasket.
f. Where a joint opening is required to make a grade or alignment adjustment, the joint shall be installed completely closed first, then opened as necessary on one side. Joint openings shall not be greater than 75 percent of the maximum opening recommended by the pipe manufacturer.
g. Joints with gap greater than 2" or as recommended by PVC Liner's Manufacturer's representation shall be grouted with non-shrink grout in accordance with Section 3600, Grout.
h. Do not use gaskets which have been scored or otherwise damaged.

5. Thermoplastic Pipe Joints:
   a. Solvent Cement Joints:
      1) Bevel pipe ends and remove all burrs before making joints. Clean both pipe and fittings thoroughly. Do not attempt to make solvent cement joints if temperature is below 40° F or above 90° F when exposed to direct sunlight or in wet conditions.
      2) Use solvent cement supplied or recommended by the pipe manufacturer.
      3) Apply joint primer and solvent cement and assemble joints in strict accordance with the recommendations and instructions of the manufacturer of the joint materials and the pipe manufacturer.
      4) Observe safety precautions with the use of joint primers and solvent cements. Allow air to circulate freely through pipelines to permit solvent vapors to escape. Slowly admit water when flushing or filling pipelines to prevent compression of gases within pipes.
   b. Push-On Joints:
      1) Bevel all field-cut pipe, remove all burrs, and provide a reference mark the correct distance from the pipe end.
      2) Clean the pipe end and the bell thoroughly before making the joint. Insert the O-ring gasket, making certain it is properly oriented. Lubricate the spigot well with an approved lubricant; do not lubricate the bell or O-ring. Insert the spigot end of the pipe carefully into the bell until the reference mark on the spigot is flush with the bell.
6. Copper Tubing Joints:

a. Assemble copper tubing with soldered joints. Solder shall be 95-5 tin-antimony solder conforming to ASTM B32.
b. Ream or file pipe to remove burrs.
c. Clean and polish contact surfaces of joints.
d. Apply flux to both male and female ends.
e. Insert end of tube into full depth of fitting socket.
f. Heat joint evenly.
g. Form continuous solder bead around entire circumference of joint.
h. Runs shall contain unions at connection to equipment and at reasonable distances along the lengths of runs to permit convenient disassembly of piping and removal of equipment.

7. Mechanical Coupling Joints:
   a. Prior to the installation and assembly of mechanical couplings, the joint ends shall be cleaned thoroughly with a wire brush to remove foreign matter. Following this cleaning, lubricant shall be applied to the rubber gasket or inside of the coupling housing and to the joint ends. After lubrication, the gasket shall be installed around the joint end of the previously installed piece and the joint end of the subsequent piece shall be mated to the installed piece. The gasket shall be positioned and the coupling housing placed around the gasket and over the grooved or shouldered joint ends. The bolts shall be inserted and the nuts screwed up tightly by hand. The bolts shall then be tightened uniformly in order to produce an equal pressure on all parts of the housing. When the housing clamps meet metal to metal, the joint is complete and further tightening is not required.
8. Stainless Steel Pipe Joints:
   a. All joints in stainless steel pipe shall be welded, except that flanged connections shall be provided at connections to valves, meters and similar equipment.
   b. Welding shall conform to the requirements of AWWA C206. All field welded joints shall be full circumferential welds designed to take the thrust at the joint location. A minimum 3/16-inch weld is required.
   c. After assembly and welding the interior and exterior of the joint and the surrounding damaged or uncoated area shall be lined and coated with the same material and to the same thickness as the shop applied lining and coating.
   d. Where flanged connections or couplings are provided, the flanges, couplings, bolts and nuts shall be coated with two 8 mil coats of high-build epoxy coating as manufactured by Tnermec, or approved equal.
9. Concrete Pipe Joints:
   a. Refer to Section 15104, Concrete Pipe, for concrete pipe joints.

I. Backfilling:
1. Conform to the applicable requirements of Section 02315, Earthwork, Excavation and Backfill.

2. Place backfill as construction progresses. Backfill by hand and use power tampers until pipe is covered by at least 1 foot of fill.

J. Connections to Valves and Hydrants:
   1. Install valves and hydrants as shown on Drawings.
   2. Provide suitable adapters when valves or hydrants and piping have different joint types.
   3. Provide thrust restraint at all hydrants and at valves at pipeline terminations.

K. Transitions from One Type of Pipe to Another:
   1. Provide all necessary adapters, specials, and connection pieces required when connecting different types and sizes of pipe or connecting pipe made by different manufacturers.

L. Unions:
   1. Install dielectric unions wherever dissimilar metals are connected, except for bronze or brass valves, in ferrous piping.
   2. Provide a union downstream of each valve with screwed connections.
   3. Provide screwed or flanged unions at each piece of equipment, where shown, and where necessary to install or dismantle piping.

M. Closures:
   1. Provide all closure pieces shown or required to complete the Work.

3.2 THRUST RESTRAINT

A. Provide thrust restraint on all piping systems. Pipe joints shall be restrained as specified in Paragraph 3.2.C of this Section.

B. Thrust restraint shall be accomplished by means of restrained pipe joints. Concrete thrust blocks shall be used only when specifically shown on the Drawings or as directed by the ENGINEER. Thrust restraints shall be designed for the axial thrust exerted by the test pressure given in the Buried Piping Schedule.

C. Restrained Pipe Joints:
   1. Pipe joints shall be restrained by means suitable to the type of pipe being installed.
      a. Ductile iron push-on joints and mechanical joints shall be restrained utilizing a proprietary restrained joint system such as American Lok-Ring, Lok-Fast, Lok-Set, U.S. Pipe Field Lok Gasket, U.S. Pipe TR Flex System, lugs and tie-rods, or other system approved by ENGINEER.
      b. Steel pipe shall be restrained with welded joints or flanged joints. Steel pipe requiring restraint shall have sufficient longitudinal steel reinforcement provided to handle the thrust forces at a maximum design stress of 15,000 psi. The thrust forces in the longitudinals must be transmitted directly to the steel joint bands using welded connections

sufficient to carry the stresses involved. No allowance for the mortar coating to handle any tensile forces is permitted.

c. Thermoplastic and copper piping shall generally be installed with soldered, solvent weld, threaded, flanged, or similar type joints. Where push-on type or other non-restrained joints are provided, the CONTRACTOR shall provide tie-rods or other suitable joint restraint system for these joints, subject to the approval of ENGINEER.

d. All pipe lengths shall be restrained.

D. Concrete Thrust Blocks:

1. Thrust blocks shall be constructed of Class "B" concrete, conforming to the requirements of MAG.
2. Blocks shall be placed against undisturbed soil as shown on Drawings or as directed by the ENGINEER. Concrete shall be placed so that pipe joints and fitting joints will be accessible for repair.
3. Size of concrete thrust blocks shall be as shown on the Drawings, or as directed and approved by ENGINEER.
4. Concrete thrust blocks shall not be used for pipe restraint except where specifically shown on the Drawings or as approved by the ENGINEER.

3.3 WORK AFFECTING EXISTING PIPING

A. Location of Existing Piping:

1. Locations of existing piping shown should be considered approximate.
2. CONTRACTOR shall determine the true locations of existing piping to which Work is to be performed and locations of other facilities which could be disturbed during earthwork operations or which may be affected by CONTRACTOR'S Work already installed.

B. Taking Existing Pipelines Out of Service:

1. 1. Do not take pipelines out of services, unless specifically provided for under this Project or approved by ENGINEER. Notify ENGINEER at least 48 hours prior to taking pipeline out of service.

C. Work on Existing Pipelines:

1. Cut or tap pipes as shown or required with machines specifically designed for this Work.
2. Install temporary plugs to prevent entry of mud, dirt, water, and debris.
3. Provide all necessary adapters, fittings, pipe, and appurtenances required to complete the Work.
4. Existing pipelines which are cut and abandoned shall be adequately capped or filled with grout.

3.4 TESTING OF PIPING

A. General:

1. Test all piping, except as otherwise authorized by ENGINEER.

2. Notify ENGINEER and local authorities having jurisdiction at least 48 hours in advance of testing if their presence is required.
3. Conduct all tests in the presence of the ENGINEER.
4. Remove or protect any pipeline-mounted devices which may be damaged by the test pressure.
5. Provide all apparatus and services required for testing, including but not limited to, the following:
    a. Test pumps, bypass pumps, hoses, calibrated gauges, meters, test containers, valves and fittings.
    b. Temporary bulkheads, bracing, blocking and thrust restraints.
6. Provide air if an air test is required and power if pumping is required.
7. Unless otherwise specified, OWNER will provide fluid required for testing.
8. Repair and retest pipelines that fail to hold specified test pressure or which exceed the allowable leakage rate.
9. Unless otherwise noted, pipelines shall hold specified test pressure for two hours.
10. Unless otherwise specified, test pressures required are at the lowest elevation of the pipeline section being tested.

B. Schedule of Pipeline Tests:
1. Refer to Section 15050, Piping Systems, for the type of test required and the required hydrostatic test pressure.
2. Unless otherwise specified, the required hydrostatic test pressures are at the lowest elevation of the pipeline.
3. For piping not listed in Section 15050, Piping Systems:
    a. Hydrostatically test pipe that will be operating at a pressure greater than five psig.
    b. Use exfiltration testing or low-pressure air testing for all other piping.
4. Hydrostatic Test Pressure:
    a. Use test pressures listed in Section 15050, Piping Systems.
    b. If a test pressure is not listed in Section 15050, Piping Systems, or if a hydrostatic test is required for piping not listed in Section 15050, Piping Systems, the test pressure will be determined by the ENGINEER based on the maximum anticipated sustained operating pressure and the methods described in the AWWA Manual or Standard which applies to the piping system.
5. CONTRACTOR shall provide a test plan 14 days prior to performing the hydrostatic pressure tests on the pipe lines.

C. Hydrostatic Testing:
1. Preparation for Testing:
    a. For plastic pipe, including fiberglass pipe, follow procedures described in Section 7 of AWWA Standard C605.
    b. For all other piping follow procedures described in AWWA Manual M9 except that the minimum wetting period required immediately prior to testing for cement-lined steel pipe and asbestos cement pipe shall be 24

hours rather than the 48 hours prescribed for concrete pipe. A wetting period is not required for metal pipe that is not cement-lined or for plastic pipe.

c. Ensure that adequate thrust protection is in place and that all joints are properly installed.

2. Test Procedure:
   a. Complete backfill and compaction at least to the pipe centerline before testing, unless otherwise required or approved by ENGINEER.
   b. Allow concrete for thrust blocks to reach design strength before testing.
   c. Fill pipeline slowly to minimize air entrapment and surge pressures. Fill rate should not exceed one foot per second in the pipe being tested. Install corporation cocks, if necessary, to remove all air.
   d. Examine exposed joints and valves, and correct visible leakage.
   e. After the wetting period prescribed above, add fluid to pressurize line to the required test pressure. Maintain test pressure for a stabilization period of ten minutes before beginning test.
   f. After the stabilization period, maintain test pressure for the duration specified in Section 15050, Piping Systems. Add fluid to restore test pressure if pressure drops five psi below test pressure at any time during the test period.
   g. Pump from a test container to maintain test pressure. Measure the volume of fluid pumped from the container and record on the test report. Record pressure at the test pump at 15 minute intervals for the duration of the test.
3. Allowable Leakage Rates:
   a. Conduct leakage test for all liquid piping after satisfactory completion of pressure test.
   b. Allow concrete pipe to stand full of water at least 12 hours prior to starting leakage test.
   c. Maintain test pressure constantly for the minimum test period and accurately measure the amount of water which must be added to maintain the test pressure.
   d. Allowable Leakage Rates (in gallons per hour per 1,000 feet per inch diameter):
      1) DIP Push On or Mechanical Joints: 0.075.

D. Required Tests for Gravity Sewer and Storm Drains:
   1. Elect to test piping, using either air or water test procedures. Notify ENGINEER, in writing, in advance of all testing, which method he plans to utilize and must follow through with the same method on all pipeline testing.
      a. Gravity sewers shall be tested with either air or water testing; however, storm drains may only be water tested.
      b. Tests shall be performed after backfilling is completed, but shall be performed before final cleanup and acceptance of Work.
      c. Tests shall be performed prior to final acceptance.
         1) Test all piping and manholes for leakage by means of the tests described below.

2) Test to be performed between adjacent manholes or as approved by the ENGINEER.

d. Prior to making tests, submit details of his testing procedures, with a description of methods and equipment CONTRACTOR proposes to use, to the ENGINEER for approval. Furnish all necessary labor, equipment, water, watertight bulkheads, rodding machine, generator, pumps and all else necessary to carry out the required tests.

2. Air Test:
   a. Wet and thoroughly clean the inside of the pipe before test is performed.
   b. Insert test plugs in ends of pipe to be tested.
   c. Securely brace test plugs.
   d. Measure and record groundwater height above the pipe invert. All gage pressures in the test shall be increased by the amount of the back pressure due to groundwater submergence.
   e. Slowly fill the pipe with air to a pressure of four psig. Maintain pressure between 4 and 3.5 psig for at least two minutes for temperature stabilization.
   f. Check all plugs for tightness.
   g. With a pressure of approximately four psig in pipe, disconnect air supply.
   h. Allow pressure to decrease to 3.5 psig.
   i. When the pressure reaches 3.5 psig, record the time required to decrease to 2.5 psig using a stopwatch.
   j. The line is considered acceptable if the time for the pressure to decrease from 3.5 psig to 2.5 psig is not less than the amount shown on the following table for the respective pipe diameters.

Minimum Acceptance Times	
Pipe Diameter (Inches)	**Time**
6	2 min. 50 sec.
8	3 min. 50 sec.
10	4 min. 45 sec.
12	5 min. 40 sec.
14	6 min. 40 sec.
16	7 min. 5 sec.
18	7 min. 35 sec.
20	9 min. 30 sec.
21	9 min. 55 sec.
24	11 min. 20 sec.

   k. If the leakage in the section tested exceeds the specified amount, make the necessary repairs or replacements required to reduce the leakage to within the specified limits and the test shall be repeated until the leakage requirement is met.

l. No one shall be allowed in the manhole during air testing.

3. Water Test:
   a. When water test is performed for reinforced concrete pipe, the test section shall be filled with water and allowed to stand for 24 hours. The water shall then be replenished and the test performed.
   b. Insert test plugs and securely brace.
   c. Fill the pipe and manhole with water to provide a positive differential head on the top of the pipe at the highest point of the pipeline under test of at least the test pressure specified in Section 15050, Piping Systems.
   d. The amount of water added to maintain this head shall be the leakage.
   e. Test for a period of at least four hours.
   f. Total leakage of any section tested shall not exceed the following rates:
      1) Gravity Sewer: 0.5 gallons per hour per 100 feet of pipe per inch diameter of pipe.
      2) Storm Drains: 2.0 gallons per hour per 100 feet of pipe per inch diameter of pipe.
   g. If the leakage in the section tested exceeds the specified amount, make the necessary repairs or replacements required to reduce the leakage to within the specified limits and the test shall be repeated until the leakage requirements is met.
   h. On steep grades it may be necessary to place plugs in the pipe between manholes to avoid excessive pressures in the pipe.
4. Visual Inspection:
   a. Prior to final acceptance, a visual inspection by ENGINEER of all appurtenant structures, (e.g., manholes, chambers, etc.), shall be required. Any visual leaks, regardless of their magnitude shall be repaired by CONTRACTOR.
5. Watertight Sewers:
   a. It is imperative that all sewers and appurtenant structures be constructed as watertight as practicable. Adhere rigidly to all requirements of the Contract Documents and follow all directions of the ENGINEER to secure a watertight sewer. If, during the Work or after its completion, any leaks are discovered, they shall be repaired in a satisfactory manner at the expense of CONTRACTOR even though the pipe and appurtenant structures may have already successfully passed the leakage tests.

E. Vertical Deflection Test for Thermoplastic Pipe:
   1. The vertical deflection test shall be conducted after the final backfill has been in place at least 30 days.
   2. Manually pull a pin-type vertical gauge mounted on a sled through the pipe. Gauge shall be set so that if vertical deflection of pipe exceeds five percent, it will stop. Excavate and reinstall all such piping. Gauge shall be as manufactured by Quality Test Products, or equal.

3.5 DISPOSAL OF WATER

A. CONTRACTOR shall provide suitable means for disposal of test and, flushing water so that no damage results to facilities or waterways.

B. Means of disposal of test and flushing water shall be subject to the approval of ENGINEER, local governing authorities, and regulatory agencies.

C. CONTRACTOR shall be responsible for any damage caused by water disposal operations.

3.6 CLEANING

A. Cleaning:
   1. Thoroughly clean all piping and flush prior to placing in service in a manner approved by ENGINEER.
   2. Piping 24-inches in diameter and larger shall be inspected from inside and all debris, dirt, and foreign matter removed.
   3. If piping that requires disinfection has not been kept clean during storage or installation, CONTRACTOR shall swab each section individually before installation with a 5% hypochlorite solution to ensure clean piping.

B. Disinfection:
   1. Disinfect all potable water piping.
   2. Disinfection shall conform to the requirements of MAG Section 611.

3.7 PIPING SCHEDULE

A. The following abbreviations are used in the Buried Piping Schedule included at the end of the Section.
   1. Service Abbreviations:
      a. Surface Water: SW
      b. Potable Water: POT
      c. Non-Potable Water: NPW
      d. Drain: D
      e. Air: A
      f. Instrument Compressed Air: IA
      g. Permeate Water: PM
      h. Clean In Place: CIP
   2. Material Abbreviations:
      a. Ductile Iron Pipe: DIP
      b. Polyvinyl Chloride: PVC
      c. Copper Pipe: COP
      d. Stainless Steel: SST
      e. Rubber Gasket Reinforced Concrete Pipe: RGRCP
   3. Lining/Coating Abbreviations:
      a. Bituminous Coated: BC

b. Cement Mortar Lined: CM
c. Polyethylene Wrap: PE
d. Protecto 401 Ceramic Epoxy: CE
e. Painted per Section 09900, Painting: P

4. Joint Abbreviations:
   a. Bell and Spigot: BS
   b. Mechanical Joint: MJ
   c. Welded: W
   d. Soldered: SD

(The rest of this page left intentionally blank)

BURIED PIPING SCHEDULE

From	To	Pipe Size (in)	Material	Pipe Number	Class	Lining	Coating	Joints	Service
Potable Water Main	MFS Chemical Facility	2	COP	POT-2-COP	Type K	N/A	N/A	SD	Pressure
Potable Water Main	ACH Facility	2	COP	POT-2-COP	Type K	N/A	N/A	SD	Pressure
Membrane Filtration System Common Drain Header	New Sewer Manhole No. 64	24	DIP	D-24-DIP	250	CE	BC, PE	MJ	Gravity
Membrane Filtration System Common Inlet Channel Train No. 1 Drain	Membrane Filtration System Common Drain Header	24	DIP	D-24-DIP	250	CE	BC, PE	MJ	Gravity
Membrane Filtration System Common Inlet Channel Train No. 2 Drain	Membrane Filtration System Common Drain Header	24	DIP	D-24-DIP	250	CE	BC, PE	MJ	Gravity
Membrane Filtration System Common Inlet Channel	Membrane Filtration System Common Drain Header	24	DIP	D-24-DIP	250	CE	BC, PE	MJ	Gravity

Train No. 3 Drain									
Membrane Filtration System Common Inlet Channel Train No. 4 Drain	Membrane Filtration System Common Drain Header	24	DIP	D-24-DIP	250	CE	BC, PE	MJ	Gravity
Membrane Filtration System CIP Pump Discharge	Existing Sewer Manhole No. 8	12	DIP	D-12-DIP	250	CE	BC, PE	MJ	Pressure
Membrane Filtration System CIP Tank	CIP Pumps Suction	12	DIP	CIP-12-DIP	250	CE	BC, PE	MJ	Pressure
CIP Pumps Suction Manifold	CIP Pumps Suction	12	DIP	CIP-12-DIP	250	CE	BC, PE	MJ	Pressure
Backpulse Tank	Permeate / Backpulse Suction Common Header	16	DIP	PM-16-DIP	250	CE	BC, PE	MJ	Pressure
Permeate / Backpulse Suction Common Header	Permeate / Backpulse Pump No. 1 Suction	16	DIP	PM-16-DIP	250	CE	BC, PE	MJ	Pressure
Permeate / Backpulse Suction	Permeate / Backpulse Pump No. 2 Suction	16	DIP	PM-16-DIP	250	CE	BC, PE	MJ	Pressure

Common Header									
Permeate / Backpulse Suction Common Header	Permeate / Backpulse Pump No. 3 Suction	16	DIP	PM-16-DIP	250	CE	BC, PE	MJ	Pressure
Permeate / Backpulse Suction Common Header	Permeate / Backpulse Pump No. 4 Suction	16	DIP	PM-16-DIP	250	CE	BC, PE	MJ	Pressure
Turbidity Analyzer Panel Drain	Sewer Manhole No. 63	4	DIP	D-4-DIP	250	CE	BC, PE	MJ	Pressure
Potable Water Main	Reconnect to existing Potable Main	8	DIP	POT-08-DIP	350	CM	BC, PE	MJ	Pressure
Potable Water Main	RWIF Blower Building Fire Riser	6	DIP	POT-6-DIP	350	CM	BC, PE	MJ	Pressure
Potable Water Main	RWIF Blower Building	6	DIP	POT-6-DIP	350	CM	BC, PE	MJ	Pressure
RWIF Blower Building	Membrane Filtration System Facility	12	SST	A-12-SST	10S	N/A	N/A	W	Pressure
SRP Turnout Structure	Raw Water Pump Station	24	RGRCP	SW-24-RGRCP	III	CE	CM	BS	Gravity
Raw Water Pump Station	Self-Cleaning Strainers	24	DIP	SW-24-DIP	250	CE	BC, PE	MJ	Pressure
Self Cleaning Strainers	Membrane Filtration System Comment Inlet Channel	24	DIP	SW-24-DIP	250	CE	BC, PE	MJ	Pressure

Membrane Filtration System	Chlorine Contact Basin	24	DIP	PM-24-DIP	250	CE	BC, PE	MJ	Pressure
Backpulse Tank	Plant Sewer	4	CPVC	D-4-CPVC	SDR 26	N/A	N/A	BS	Gravity
Self-Cleaning Strainer No. 1	Self-Cleaning Strainer No. 1 Backwash Assist Pump	2	CPVC	D-2-CPVC	SDR 26	N/A	N/A	BS	Pressure
Self-Cleaning Strainer No. 1 Backwash Assist Pump	Self-Cleaning Strainers Common Drain Header	2	CPVC	D-2-CPVC	SDR 26	N/A	N/A	BS	Pressure
Self-Cleaning Strainer No. 2	Self-Cleaning Strainer No. 2 Backwash Assist Pump	2	CPVC	D-2-CPVC	SDR 26	N/A	N/A	BS	Pressure
Self-Cleaning Strainer No. 2 Backwash Assist Pump	Self-Cleaning Strainers Common Drain Header	2	CPVC	D-2-CPVC	SDR 26	N/A	N/A	BS	Pressure
Self-Cleaning Strainer No. 3	Self-Cleaning Strainer No. 3 Backwash Assist Pump	2	CPVC	D-2-CPVC	SDR 26	N/A	N/A	BS	Pressure
Self-Cleaning Strainer No. 3 Backwash Assist Pump	Self-Cleaning Strainers Common Drain Header	2	CPVC	D-2-CPVC	SDR 26	N/A	N/A	BS	Pressure
Self-Cleaning Strainers Common Drain Header	Sewer Manhole No. 63	6	CPVC	D-6-CPVC	SDR 26	N/A	N/A	BS	Gravity

RWIF Blower Building	Relocated Secondary Clarifier Drain Pipe	2	PVC	D-02-PVC	SDR 26	N/A	N/A	BS	Gravity
Secondary Clarifier Drain Pipe	New Sewer Manhole No. 64	2	PVC	D-2-PVC	SDR 26	N/A	N/A	BS	Gravity
RWIF Blower Building	Membrane Filtration System Facility	1	SST	IA-1-SST	316, ASTM A 269	N/A	N/A	W	Pressure
Chlorine Contact Basin	Existing Sample Line	1	PVC	SLM-1-PVC	SDR 26	N/A	N/A	BS	Pressure

++ END OF SECTION ++

SECTION 15052

EXPOSED PIPING INSTALLATION

PART 1 - GENERAL

1.1 SUMMARY

A. Scope:
   1. CONTRACTOR shall provide all labor, materials, equipment, and incidentals as shown, specified, and required to install and test all exposed piping, fittings, and specials. The Work includes, but is not limited to, the following:
      a. All types and sizes of exposed piping except those specified under other Sections.
      b. Piping embedded in concrete within a structure or foundation will be considered as exposed and included herein.
      c. Supports, restraints, and other anchors.
      d. Work on or affecting existing piping.
      e. Testing.
      f. Cleaning and disinfecting.
      g. Installation of all jointing and gasketing materials, specials, flexible couplings, mechanical couplings, harnessed and flanged adapters, sleeves, tie-rods, and all other Work required for completing the exposed piping installation.
      h. Incorporation of valves, meters, and special items shown or specified into the piping systems as required and as specified in the appropriate Division 15, Mechanical, Sections.
      i. Unless otherwise specifically shown, specified, or included under other Sections, all exposed piping Work required, beginning at the outside face of structures or structure foundation, and extending into the structure.

B. Coordination:
   1. Review installation procedures under other Sections and coordinate with the Work that is related to this Section.
   2. This Section 15052, Exposed Piping Installation, specifies the installation of all exposed piping materials specified in Division 15, Mechanical. Coordinate with these Sections.

1.2 RELATED SECTIONS

A. Section 02315, Earthwork, Excavation and Backfill.

B. Section 09900, Painting.

C. Section 11295, Hydraulic Valves.

D. Section 15050, Piping Systems.

E. Section 15061, Ductile Iron Pipe.

F. Section 15064, Copper Pipe.

G. Section 15065, Thermoplastic Pipe and Accessories.

H. Section 15066, Stainless Steel Pipe.

I. Section 15120, Piping Specialties and Accessories.

1.3 QUALITY ASSURANCE

A. Requirements of Regulatory Agencies:
   1. Comply with applicable requirements of NFPA Standard No. 13 for "Installation of Sprinkler Systems" and NFPA Standard No. 14 for "Standpipe and Hose Systems" used for fire protection.
   2. Comply with requirements of UL, FM, and other jurisdictional authorities, where applicable.

B. Reference Standards: Comply with applicable provisions and recommendations of the following, except as otherwise shown or specified.
   1. ANSI B 16.3, Malleable-Iron Threaded Fittings, Classes 150 and 300.
   2. ANSI B 16.4, Cast Iron Threaded Fittings, Classes 125 and 250.
   3. ANSI B 16.5, Pipe Flanges and Flanged Fittings, Steel Nickel Alloy and Other Special Alloys.
   4. ANSI B 16.9, Factory-Made Wrought Steal Butt Welding Fittings.
   5. ANSI B 16.11, Forged Steel Fittings, Socket-Welding and Threaded.
   6. ANSI B 31.1, Power Piping.
   7. ANSI B 31.3, Chemical Plant and Petroleum Refinery Piping.
   8. ANSI B 31.8, Gas Transmission and Distribution Piping Systems.
   9. AWWA C 111, Rubber Gasket Joints for Ductile-Iron Pressure Pipe and Fittings.
   10. AWWA C 206, Field Welding of Steel Water Pipe Joints.
   11. AWWA C 600, Installation of Ductile Iron Water Mains and Their Appurtenances.
   12. AWWA C 606, Grooved and Shouldered Type Joints.
   13. AWWA C 651, Disinfecting Water Mains.
   14. AWWA M11, Steel Water Pipe Design and Installation.
   15. AWWA M23, PVC Piping.
   16. AWS D 1.1, Structural Welding Code.
   17. AWS D 10.7, Recommended Practices For Gas Shielded-Arc Welding of Aluminum and Aluminum Alloy Pipe.
   18. AWS D 10.9, Standard for Qualification of Welding Procedures and Welders for Piping and Tubing.

19. ASME Boiler and Pressure Vessel Code.
20. NFPA 13, Installation of Sprinkler Systems.
21. NFPA 14, Standpipe and Hose Systems.
22. NFPA 54, National Fuel Gas Code.
23. NSF/ANSI 61, Drinking Water System Components Health Effects.
24. Arizona Administrative Code R18-4-213, Standards for Additives, Materials, and Equipment.
25. MAG, Maricopa County Association of Government Standard Specifications and Details.

1.4 SUBMITTALS

A. Shall be in accordance with Section 15050, Piping Systems submittal information.

B. Shop Drawings: Submit for approval the following:
   1. A copy of this specification section, with addendum updates included, and all referenced and applicable sections, with addendum updates included, with each paragraph check-marked to indicate specification compliance or marked to indicate requested deviations from specification requirements. Check marks (✓) shall denote full compliance with a paragraph as a whole. If deviations from the specifications are indicated, and therefore requested by the CONTRACTOR, each deviation shall be underlined and denoted by a number in the margin to the right of the identified paragraph, referenced to a detailed written explanation of the reasons for requesting the deviation. The ENGINEER shall be the final authority for determining acceptability of requested deviations. The CONTRACTOR shall furnish equipment and/or services as specified if an exception and/or deviation is rejected. The remaining portions of the paragraph not underlined will signify compliance on the part of the CONTRACTOR with the specifications. Failure to include a copy of the marked-up specification sections, along with justification(s) for any requested deviations to the specification requirements, with the submittal shall be sufficient cause for rejection of the entire submittal with no further consideration.
   2. The CONTRACTOR shall submit the preventive maintenance information package as part of the shop drawing submittal package to the ENGINEER for review and approval. **SHOP DRAWING SUBMITTAL PACKAGE WILL NOT BE APPROVED WITHOUT ACCEPTANCE OF PREVENTIVE MAINTENANCE INFORMATION.**

1.5 PRODUCT DELIVERY, STORAGE, AND HANDLING

A. Deliver materials to the site to insure uninterrupted progress of the Work.

B. Handle all pipe, fittings, and accessories carefully with approved handling devices. Do not drop or roll pipe off trucks. Do not otherwise drop, roll, or skid piping.

C. Store pipes and fittings on heavy wood blocking or platforms so they are not in contact with the ground.

D. Unload pipe, fittings, and specials opposite to or as close to the place where they are to be installed as is practical to avoid unnecessary handling. Keep pipe interiors completely free from dirt and foreign matter.

E. Inspect delivered pipe for cracked, gouged, chipped, dented, or other damaged material and immediately remove from site.

PART 2 - PRODUCTS

2.1 MATERIALS

A. Required pipe materials are listed in the Piping Schedule. Refer to applicable Sections for Material Specifications.

B. General:
   1. Marking Piping:
      a. Clearly mark each piece of pipe or fitting with a designation conforming to that shown on the Shop Drawings.
      b. Cast or paint material, type, and pressure designation on each piece of pipe or fitting 4-inches in diameter and larger.
      c. Pipe and fittings smaller than 4-inches in diameter shall be clearly marked by manufacturer as to material, type, and rating.

C. Pipe Identification Markers and Arrows: Refer to Section 09900, Painting.

PART 3 - EXECUTION

3.1 INSTALLATION

A. General:
   1. Install piping as shown, specified, and as recommended by the manufacturer.
   2. If there is a conflict between manufacturer's recommendations and the Contract Documents, request instructions from ENGINEER before proceeding.

B. Manufacturer's Installation Specialist:
   1. Provide the services of a competent installation specialist of the pipe manufacturer when pipe installation begins for the following:
      a. Stainless steel pipe.
      b. Ductile iron pipe.
      c. Copper pipe
      d. Thermoplastic Pipe

2. Retain installation specialist at the site for a minimum of two days or until competency of the pipe installation crew has been satisfactorily demonstrated.

C. Piping Installation:
   1. Install straight runs true to line and elevation, unless otherwise noted on Plans.
   2. Install vertical pipe truly plumb in all directions.
   3. Install piping parallel or perpendicular to building walls. Piping at angles and 45 degree runs across corners will not be accepted unless specifically shown or approved.
   4. Install small diameter piping generally as shown when specific locations and elevations are not indicated. Locate such piping as required to avoid ducts, equipment, beams, and other obstructions.
   5. Install piping so as to leave all corridors, walkways, work areas, and like spaces unobstructed. Unless otherwise approved, provide a minimum headroom clearance under all piping of 7 feet 6-inches.
   6. Protect and keep clean water pipe interiors, fittings, and valves.
   7. Provide temporary caps or plugs over all pipe openings at the end of each day's Work and when otherwise required or directed by ENGINEER.
   8. Cutting: Cut pipe from measurements taken at site, not from Drawings.
   9. Install dielectric unions wherever dissimilar metals are connected, except for bronze or brass valves in ferrous piping.
   10. Provide a union downstream of each valve with screwed connections.
   11. Provide screwed or flanged unions at each piece of equipment where shown and where necessary to install or dismantle piping.
   12. Additional Requirements for Thermoplastic Piping:
      a. Support all valves independently of the piping system.
      b. Utilize wide band supports as recommended by manufacturer and approved by ENGINEER to minimize localized stresses.
      c. Provide piping passing through walls with a sleeve of wearing material to prevent abrasion damage to piping.
      d. When anchors are required at locations other than equipment or tanks they shall be placed at elbows, valve locations, and at bends in pipeline.
      e. Spacing of supports shall be in accordance with the manufacturer's published recommendations at the maximum design operating temperature of the pipe.
      f. Use "U" clamps with wide band circumferential contact.
      g. Use guides on long runs of piping to maintain alignment and reduce chance of elastic failure of pipe. Space guides as recommended by manufacturer.
      h. Use bellows with low axial force to take up pipe expansion. Provide anchors to restrain the expansion joint. Use of bellows joints shall be kept to a minimum. Flexible connectors may be used to absorb thermal movement when approved by ENGINEER.
      i. Do not install pipe when ambient temperature is less than 60° F.

D. Joints:

1. General:
   a. Make joints in accordance with the pipe manufacturer's recommendations and the following requirements:
      1) Cut piping accurately and squarely and install without forcing or springing.
      2) Ream out all pipes and tubing to full inside diameter after cutting. Remove all sharp edges on end cuts.
      3) Remove all cuttings and foreign matter from the inside of pipe and tubing before installation. Thoroughly clean all pipe, fittings, valves, specials, and accessories before installing.
2. Mechanical Joints:
   a. Wipe clean the socket, plain end and adjacent areas immediately before making joint. Make certain that cut ends are tapered and sharp edges are filed off smooth.
   b. Lubricate the plain end and gasket with soapy water or manufacturer's recommended pipe lubricant, in accordance with AWWA C111, just prior to slipping the gasket onto the plain end of the joint assembly.
   c. Place the gland on the plain end with the lip extension toward the plain end, followed by the gasket with the narrow edge of the gasket toward the plain end.
   d. Insert the pipe into the socket and press the gasket firmly and evenly into the gasket recess. Keep the joint straight during assembly.
   e. Push gland toward socket and center it around pipe with the gland lip against the gasket.
   f. Insert bolts and hand tighten nuts.
   g. Make deflection after joint assembly, if required, but prior to tightening bolts. Alternately tighten bolts 180 degrees apart to seat the gasket evenly. The bolt torque shall be as follows:

Pipe Size (inches)	Bolt Size (inches)	Range of Torque (ft-lbs)
3	5/8	45 to 60
4 to 24	3/4	75 to 90
30 to 36	1	100 to 120

3. Flanged Joints:
   a. Assemble flanged joints using 1/8-inch ring-type gaskets for raised face flanges. Use full face gaskets for flat face flanges, unless otherwise approved by ENGINEER. Gaskets shall be suitable for the service intended in accordance with the manufacturer's ratings and instructions. Gaskets shall be properly centered.
   b. Bolts shall be tightened in a sequence which will insure equal distribution of bolt loads.
   c. The length of bolts shall be uniform, and they shall not project beyond the nut more than 1/4-inch or fall short of the nut when fully taken up. The

ends of bolts shall be machine cut so as to be neatly rounded. No washers shall be used.

d. Bolt threads and gasket faces for flanged joints shall be lubricated prior to assembly.

e. Alternately tighten bolts 180 degrees apart to compress the gasket evenly.

4. Stainless Steel Pipe Joints:
   a. For threaded joints, use standard, right hand tapered full depth threads on steel piping and apply an approved joint compound, to the male threads only, before installation. Remove all cuttings and foreign matter from the inside of the pipe. Thoroughly clean all pipe, fittings, valves, specials, and accessories before installing.
5. Thermoplastic Pipe Joints:
   a. Solvent Cement Joints:
      1) Bevel pipe ends and remove all burrs before making joints. Clean both pipe and fittings thoroughly. Do not attempt to make solvent cement joints if temperature is below 40° F or above 90° F when exposed to direct sunlight, nor in wet conditions.
      2) Use solvent cement supplied or recommended by the pipe manufacturer.
      3) Apply joint primer and solvent cement and assemble joints in strict accordance with the recommendations and instructions of the manufacturer of the joint materials and the pipe manufacturer.
      4) Observe safety precautions with the use of joint primers and solvent cements. Allow air to circulate freely through pipelines to permit solvent vapors to escape. Slowly admit water when flushing or filling pipelines to prevent compression of gases within pipes.
   b. Threaded Joints:
      1) Clean both pipe and fittings thoroughly.
      2) Use Teflon tape to ensure a watertight seal with threads.
      3) Observe safety precautions with the use of joint primers and solvent cements. Allow air to circulate freely through pipelines to permit solvent vapors to escape. Slowly admit water when flushing or filling pipelines to prevent compression of gases within pipes.
6. Copper Tubing Joints:
   a. Assemble copper tubing with soldered joints. Solder shall be 95-5 tin-antimony conforming to ASTM B32.
   b. Ream or file pipe to remove burrs.
   c. Clean and polish contact surfaces of joints.
   d. Apply flux to both male and female ends.
   e. Insert end of tube into full depth of fitting socket.
   f. Heat joint evenly.
   g. Form continuous solder bead around entire circumference of joint.
   h. Runs shall contain unions at connections to equipment and at reasonable distances along the lengths of runs to permit convenient disassembly of piping and removal of equipment.

E. Installing Valves and Accessories:
   1. Provide supports for large valves, flow meters, and other heavy items as shown or required.
   2. Position valve operators as shown. When the position is not shown, CONTRACTOR shall notify ENGINEER prior to installation for position approval by ENGINEER. The valve shall be installed so that it can be conveniently operated and as approved by ENGINEER. Avoid placing operators at angles to the floors or walls. If valve operator is installed without notification to ENGINEER, CONTRACTOR shall move valve, as required, without additional expense.
   3. Position flow measuring devices in pipe lines so that they have the amount of straight upstream and downstream runs recommended by the manufacturer, unless specific location dimensions are shown.

F. Unions:
   1. Install dielectric unions wherever dissimilar metals are connected, except for bronze or brass valves, in ferrous piping.
   2. Provide a union downstream of each valve with screwed connections.
   3. Provide screwed or flanged unions at each piece of equipment, where shown, and where necessary to install or dismantle piping.

G. Eccentric Reducers: Use eccentric reducers where shown and where air or water pockets would otherwise occur in mains because of a reduction in pipe size.

H. Transitions From One Type of Pipe to Another:
   1. Do not take pipelines out of service unless specifically named below or approved by ENGINEER.
   2. Provide all necessary adapters, specials, and connection pieces required when connecting different types and sizes of pipe or connecting pipe made by different manufacturers.

I. Work on Existing Pipelines:
   1. Cut or tap pipes as shown or required with machines specifically designed for this Work.
   2. Install temporary plugs to keep out all dirt, water, and debris.
   3. Provide all necessary adapters, fittings, pipe, and appurtenances required.

3.2 THRUST RESTRAINT

A. Provide thrust restraint on all pressure piping systems and where otherwise shown on the Drawings or specified.

B. Thrust restraint shall be accomplished by means of restrained pipe joints. Thrust restraints shall be designed for the axial thrust exerted by the test pressure specified in Section 15050, Piping Systems.

C. Restrained Pipe Joints:
   1. Pipe joints shall be restrained by means suitable for the type of pipe being installed.
   2. Restrain concrete pipe joints utilizing welded joints.
   3. Restrain ductile iron mechanical joint pipe utilizing tie rods and clamps or proprietary restrained joint system conforming to the requirements of Section 15101, Ductile Iron Pipe.
   4. Restrain ductile iron pipe connected by flexible couplings or flanged coupling adapters by harnessing across the coupling or adapter using tie rods or extended bolts connecting between flanges.

3.3 PAINTING

A. All pipe field painting shall conform to the requirements of Section 09900, Painting.

3.4 TESTING OF PIPING

A. General:
   1. Test all piping as specified below, unless otherwise authorized by ENGINEER.
   2. Notify ENGINEER 48 hours in advance of testing.
   3. Provide all testing apparatus including pumps, hoses, gauges, and fittings.
   4. Pipelines shall hold the specified test pressure for two hours.
   5. Repair and retest pipelines which fail to hold specified test pressures or which exceed the allowable leakage rate.
   6. Test pressures required are at the lowest elevation of the pipeline section being tested, unless otherwise specified.
   7. Follow special test procedures below for gaseous chemical and liquid chlorine lines.
   8. Conduct all tests in the presence of the ENGINEER. Repeat tests in the presence of local authorities having jurisdiction, if required.

B. Schedule of Pipeline Tests:
   1. Test piping at the test pressure listed in the Exposed Piping Schedule.
   2. For piping not included in the Schedule, the ENGINEER will notify CONTRACTOR in writing of the test pressure to be utilized.

C. Pressure Test Procedure:
   1. Insure that all supports and restraint protection are securely in place.
   2. Fill section to be tested slowly with water and expel all air. Install cocks, if necessary, to ensure removal of air.
   3. Test only one section of pipe at a time.
   4. Apply 150 psi for two hours and observe pressure gauge. Check carefully for leaks while test pressure is being maintained.

D. Leakage Testing:
   1. Conduct leakage test after satisfactory completion of pressure test.

2. Allow concrete pipe to stand full of water at least 12 hours prior to starting leakage test.
3. Allowable Leakage Rates (gallons per hour per 1,000 feet per inch diameter:
    a. Concrete Pressure Pipe: 0.0.
    b. Copper, Steel, Ductile Iron, Thermoplastic, and all Other Piping: 0.0.
    c. Ductile Iron Pipe with Mechanical Joints: 0.0.
4. Leakage Test Procedure:
    a. Examine exposed pipe, joints, fittings, and valves. Repair visible leakage or replace the defective pipe, fitting, or valve.
    b. Refill the line under test to reach the required test pressure.
    c. Provide a test container filled with a known quantity of water at the start of the test. Attach the test pump suction to the test container.
    d. Pump water from the test container into the line with the test pump to hold the specified test pressure for the test period. Water remaining in the container shall be measured and the amount used during the test shall be recorded on the test report.
    e. Perform all repairs, replacement, and retesting required because of failure to meet testing requirements.
    f. Leakage shall be less than rate specified above.

E. Additional Procedures for Gaseous Chemical Piping:
1. Purge piping completely with dry compressed nitrogen or air after pressure and leakage tests have been satisfactorily completed.
2. Fill pipeline with dry air or nitrogen and pressurize to 50 psi.
3. Test all joints with a soapy water solution.
4. Demonstrate that vacuum lines are completely tight under a vacuum of 25-inches of mercury.

F. Test Procedures for Chlorine Piping: Conform to all requirements of the Chlorine Manual and Pamphlet No. 6 of the Chlorine Institute.
1. Dry the piping with steam and dry air, and then purge piping completely with dry compressed nitrogen or air after pressure and leakage tests have been satisfactorily completed.
2. Fill pipeline with dry air or nitrogen and test as described in the Chlorine Manual.
3. Test all joints with a soapy water solution.

3.5 CLEANING AND DISINFECTION

A. Cleaning:
1. Thoroughly clean all piping and flush prior to placing in service in a manner approved by ENGINEER.
2. Piping 24-inches in diameter and larger shall be inspected from inside and all debris, dirt, and foreign matter removed.

3. If piping which requires disinfection has not been kept clean during storage or installation, CONTRACTOR shall swab each section individually with a 5% hypochlorite solution to ensure clean piping.

B. Disinfection:
   1. Disinfect all potable water piping. Disinfection shall conform to MAG Section 611.

C. Provide suitable means for disposal of test and flushing water so that no damage results to facilities or waterways.

D. Means of disposal of test and flushing water shall be subject to the approval of ENGINEER, local governing authorities and regulatory agencies.

E. Responsibility for any damages caused by the water disposal operations belongs to CONTRACTOR.

3.6 IDENTIFICATION OF PIPING

A. Pipe Identification Markers and Arrows:
   1. Product and Manufacturer: Provide one of the following:
      a. Brady B-500 vinyl cloth self-sticking arrows and markers except on insulated pipe. Brady B-350 perma-code film self-sticking arrows and markers on pipe insulation.
      b. Equivalent products as made by Seton Name Plate Corporation.
      c. Or equal.
   2. Install markers and arrows at following locations:
      a. At intervals not exceeding 50 feet along continuous runs of pipe.
      b. Wherever pipes pass through walls, floors or panels.
      c. At each valve or equipment connection.
      d. At each branch where it connects to a main line.

3.7 PIPING SCHEDULE

A. The following abbreviations are used in the Exposed Piping Schedule at the end of this Section.
   1. Service Abbreviations:
      a. Surface Water: SW
      b. Potable Water: POT
      c. Drain: D
      d. Air: A
      e. Instrument Compressed Air: IA
      f. Permeate Water: PM
      g. Sodium Hypochlorite: SHY
      h. Citric Acid: CA
      i. Sulfuric Acid: SA

j. Sodium Bisulfite: SBS
k. Caustic Soda: CAS
l. ACH Coagulant: ACH
m. Sample Line: SLM
n. Clean In Place: CIP

2. Material Abbreviations:
   a. Ductile Iron Pipe: DIP
   b. Rubber Gasket Reinforced Concrete Pipe: RGRCP
   c. Chlorinated Polyvinyl Chloride: CPVC
   d. Polyvinyl Chloride: PVC
   e. Copper Pipe: COP
   f. Stainless Steel: SST
3. Lining Abbreviations:
   a. Protecto 401 Ceramic Epoxy: CE
4. Joint Abbreviations:
   a. Flanged: FLG
   b. Mechanical Joint: MJ
   c. Welded: W
   d. Solvent Welded: SW
   e. Soldered: S

(The remainder of this page is left intentionally blank)

EXPOSED PIPING SCHEDULE

From	To	Pipe Size	Material	Pipe Number	Class	Lining	Joints	Service
RAW WATER PUMP STATION								
Raw Surface Water Submersible Pump No. 1	Raw Surface Water Common Discharge Manifold	18	DIP	SW-18-DIP	53	CE	FLG	Pressure
Raw Surface Water Submersible Pump No. 2	Raw Surface Water Common Discharge Manifold	18	DIP	SW-18-DIP	53	CE	FLG	Pressure
Raw Surface Water Submersible Pump No. 3	Raw Surface Water Common Discharge Manifold	18	DIP	SW-18-DIP	53	CE	FLG	Pressure
Raw Surface Water Common Discharge Manifold	Self-Cleaning Strainers	24	DIP	SW-24-DIP	53	CE	FLG	Pressure
RW-24-DIP	Raw Water Pump Station Common Discharge Pipe Flow Meter	18	DIP	SW-18-DIP	53	CE	FLG	Pressure
SELF-CLEANING STRAINERS								
Self-Cleaning Strainer No. 1	Self-Cleaning Strainer Common Discharge Manifold	18	DIP	SW-18-DIP	53	CE	FLG	Pressure
Self-Cleaning Strainer No. 2	Self-Cleaning Strainer Common Discharge Manifold	18	DIP	SW-18-DIP	53	CE	FLG	Pressure
Self-Cleaning Strainer No. 3	Self-Cleaning Strainer Common Discharge Manifold	18	DIP	SW-18-DIP	53	CE	FLG	Pressure
Self-Cleaning Strainer Common Discharge Manifold	Membrane Filtration System Common Inlet Channel	24	DIP	SW-24-DIP	53	CE	FLG	Pressure

From	To	Pipe Size	Material	Pipe Number	Class	Lining	Joints	Service
Chemical Trench	ACH Coagulant Dosage Point No. 1	1	CPVC	ACH-01-CPVC	80	N/A	SW	Pressure
Chemical Trench	ACH Coagulant Dosage Point No. 2	1	CPVC	ACH-01-CPVC	80	N/A	SW	Pressure
MEMBRANE FILTRATION SYSTEM FACILITY								
Process Air Common Manifold	Membrane Filtration System Train No. 1	12	SST	A-12-SST	10S	N/A	W	Pressure
Process Air Common Manifold	Membrane Filtration System Train No. 2	12	SST	A-12-SST	10S	N/A	W	Pressure
Process Air Common Manifold	Membrane Filtration System Train No. 3	12	SST	A-12-SST	10S	N/A	W	Pressure
Process Air Common Manifold	Membrane Filtration System Train No. 4	12	SST	A-12-SST	10S	N/A	W	Pressure
Membrane Filtration System Train No. 1	Permeate / Backwash Water Common Manifold	14	DIP	PM-14-DIP	53	CE	FLG	Pressure
Membrane Filtration System Train No. 2	Permeate / Backwash Water Common Manifold	14	DIP	PM-14-DIP	53	CE	FLG	Pressure
Membrane Filtration System Train No. 3	Permeate / Backwash Water Common Manifold	14	DIP	PM-14-DIP	53	CE	FLG	Pressure
Membrane Filtration System Train No. 4	Permeate / Backwash Water Common Manifold	14	DIP	PM-14-DIP	53	CE	FLG	Pressure
Permeate / Backpulse Pump No. 1 Discharge	Permeate / Backwash Water Common Manifold	12	DIP	PM-12-DIP	53	CE	FLG	Pressure
Permeate / Backpulse Pump No. 2 Discharge	Permeate / Backwash Water Common Manifold	12	DIP	PM-12-DIP	53	CE	FLG	Pressure
Permeate / Backpulse Pump No. 3 Discharge	Permeate / Backwash Water Common Manifold	12	DIP	PM-12-DIP	53	CE	FLG	Pressure
Permeate / Backpulse Pump No. 4 Discharge	Permeate / Backwash Water Common Manifold	12	DIP	PM-12-DIP	53	CE	FLG	Pressure
Membrane Filtration	Membrane Filtration	24	SST	CIP-24-SST	304	N/A	FLG	Pressure

From	To	Pipe Size	Material	Pipe Number	Class	Lining	Joints	Service
System Common Inlet Channel / CIP Pumps	System Train No. 1 Inlet / Drain / CIP							
Membrane Filtration System Common Inlet Channel / CIP Pumps	Membrane Filtration System Train No. 2 Inlet / Drain / CIP	24	SST	CIP-24-SST	304	N/A	FLG	Pressure
Membrane Filtration System Common Inlet Channel / CIP Pumps	Membrane Filtration System Train No. 3 Inlet / Drain / CIP	24	SST	CIP-24-SST	304	N/A	FLG	Pressure
Membrane Filtration System Common Inlet Channel / CIP Pumps	Membrane Filtration System Train No. 4 Inlet / Drain / CIP	24	SST	CIP-24-SST	304	N/A	FLG	Pressure
Membrane Filtration System Common Inlet Channel / CIP Pumps	Membrane Filtration System Train No. 1 Inlet / Drain / CIP	12	DIP	CIP-12-DIP	53	CE	FLG	Pressure
Membrane Filtration System Common Inlet Channel / CIP Pumps	Membrane Filtration System Train No. 2 Inlet / Drain / CIP	12	DIP	CIP-12-DIP	53	CE	FLG	Pressure
Membrane Filtration System Common Inlet Channel / CIP Pumps	Membrane Filtration System Train No. 3 Inlet / Drain / CIP	12	DIP	CIP-12-DIP	53	CE	FLG	Pressure
Membrane Filtration System Common Inlet Channel / CIP Pumps	Membrane Filtration System Train No. 4 Inlet / Drain / CIP	12	DIP	CIP-12-DIP	53	CE	FLG	Pressure
Permeate / Backwash Water Common Manifold	PM-24-DIP (Buried)	24	DIP	PM-24-DIP	53	CE	FLG	Pressure
CIP Pumps Common Discharge Header	CIP Tank	12	DIP	CIP-12-DIP	53	CE	FLG	Pressure
Membrane Filtration System Common Inlet Channel Train No. 1 Inlet / Drain	D-24-DIP (Buried)	24	DIP	D-24-DIP	53	CE	FLG	Gravity

From	To	Pipe Size	Material	Pipe Number	Class	Lining	Joints	Service
Membrane Filtration System Common Inlet Channel Train No. 2 Inlet / Drain	D-24-DIP (Buried)	24	DIP	D-24-DIP	53	CE	FLG	Gravity
Membrane Filtration System Common Inlet Channel Train No. 3 Inlet / Drain	D-24-DIP (Buried)	24	DIP	D-24-DIP	53	CE	FLG	Gravity
Membrane Filtration System Common Inlet Channel Train No. 4 Inlet / Drain	D-24-DIP (Buried)	24	DIP	D-24-DIP	53	CE	FLG	Gravity
PM-24-DIP	Backpulse Tank	16	DIP	PM-16-DIP	53	CE	FLG	Pressure
PM-24-DIP	Membrane Filtration System Common Discharge Pipe Flow Meter	18	DIP	PM-18-DIP	53	CE	FLG	Pressure
Chemical Trench	Membrane Filtration System CIP Neutralization Loop from Membrane Train to CIP Tank	3/4	CPVC	SBS-3/4-CPVC	80	N/A	SW	Pressure
Chemical Trench	Membrane Filtration System CIP Neutralization Loop from Membrane Train to CIP Tank	1 1/2	CPVC	CAS-1 1/2-CPVC	80	N/A	SW	Pressure
Chemical Trench	Membrane Filtration System Membrane Cleaning Chemicals	1 1/2	CPVC	SHY-1 1/2-CPVC	80	N/A	SW	Pressure

From	To	Pipe Size	Material	Pipe Number	Class	Lining	Joints	Service
	Dosage Point							
Chemical Trench	Membrane Filtration System Membrane Cleaning Chemicals Dosage Point	1 1/2	CPVC	CA-1 1/2-CPVC	80	N/A	SW	Pressure
Chemical Trench	Membrane Filtration System Membrane Cleaning Chemicals Dosage Point	1/2	CPVC	SA-1/2-CPVC	80	N/A	SW	Pressure
Permeate Pump 1 Sample Location	Turbidity Analyzer Panel	1	CPVC	SLM-1/2-CPVC	80	N/A	SW	Pressure
Permeate Pump 2 Sample Location	Turbidity Analyzer Panel	1	CPVC	SLM-1/2-CPVC	80	N/A	SW	Pressure
Permeate Pump 3 Sample Location	Turbidity Analyzer Panel	1	CPVC	SLM-1/2-CPVC	80	N/A	SW	Pressure
Permeate Pump 4 Sample Location	Turbidity Analyzer Panel	1	CPVC	SLM-1/2-CPVC	80	N/A	SW	Pressure
BLOWER BUILDING								
Positive Displacement Blower No. 1	Process Air Common Manifold	12	SST	A-12-SST	10S	N/A	W	Pressure
Positive Displacement Blower No. 2	Process Air Common Manifold	12	SST	A-12-SST	10S	N/A	W	Pressure
Process Air Common Manifold	A-12-SST (Buried)	12	SST	A-12-SST	10S	N/A	W	Pressure
Air Compressor No. 1	Common Compressed Air Tubing to Air Dryers	1	SST	IA-1-SST	316, ASTM A 774	N/A	W	Pressure
Air Compressor No. 2	Common Compressed Air Tubing to Air Dryers	1	SST	IA-1-SST	316, ASTM A 774	N/A	W	Pressure
Common Compressed Air	Air Dryer No. 1	1	COP	IA-1-COP	Type K	N/A	S	Pressure

From	To	Pipe Size	Material	Pipe Number	Class	Lining	Joints	Service
Tubing to Dryers								
Common Compressed Air Tubing to Dryers	Air Dryer No. 2	1	COP	IA-1-COP	Type K	N/A	S	Pressure
Air Dryer No. 1	Common Compressed Air Tubing	1	SST	IA-1-SST	316, ASTM A 774	N/A	W	Pressure
Air Dryer No. 2	Common Compressed Air Tubing	1	SST	IA-1-SST	316, ASTM A 774	N/A	W	Pressure
Common Compressed Air Tubing	IA-1-SST (Buried)	1	SST	IA-1-SST	316, ASTM A 774	N/A	W	Pressure
MFS CHEMICAL FACILITY								
Sodium Hypochlorite Storage Tank Fill Line	Sodium Hypochlorite Storage Tank	3	CPVC	SHY-3-CPVC	80	N/A	SW	Pressure
Sodium Hypochlorite Storage Tank Pump Suction Line	Sodium Hypochlorite Metering Pump 1	2	CPVC	SHY-2-CPVC	80	N/A	SW	Pressure
Sodium Hypochlorite Storage Tank Drain Line	Sodium Hypochlorite Containment Area Sump	3	CPVC	SHY-3-CPVC	80	N/A	SW	Gravity
Sodium Hypochlorite Storage Tank Overflow Line	Sodium Hypochlorite Containment Area Sump	3	CPVC	SHY-3-CPVC	80	N/A	SW	Gravity
Sodium Hypochlorite Metering Pumps	Chemical Trench	1 1/2	CPVC	SHY-1 1/2-CPVC	80	N/A	SW	Pressure
Sodium Hypochlorite Metering Pumps Discharge Line	Sodium Hypochlorite Feed Area Sump	2	CPVC	SHY-2-CPVC	80	N/A	SW	Pressure
Citric Acid Storage Tote	Citric Acid Metering Pumps	2 1/2	CPVC	CA-2 1/2-CPVC	80	N/A	SW	Pressure
Citric Acid Metering	Chemical Trench	1 1/2	CPVC	CA-1 1/2-	80	N/A	SW	Pressure

From	To	Pipe Size	Material	Pipe Number	Class	Lining	Joints	Service
Pumps Discharge Line				CPVC				
Citric Acid Storage Tote Suction Line	Citric Acid Containment Area Sump	2 1/2	CPVC	CA-2 1/2-CPVC	80	N/A	SW	Pressure
Citric Acid Metering Pumps Discharge Line	Citric Acid Feed Area Sump	1 1/2	CPVC	CA-1 1/2-CPVC	80	N/A	SW	Pressure
Sulfuric Acid Storage Tote	Sulfuric Acid Metering Pumps	1	CPVC	SA-1-CPVC	80	N/A	SW	Pressure
Sulfuric Acid Metering Pumps Discharge Line	Chemical Trench	½	CPVC	SA-1/2-CPVC	80	N/A	SW	Pressure
Sulfuric Acid Storage Tote Suction Line	Sulfuric Acid Containment Area Sump	1	CPVC	SA-1-CPVC	80	N/A	SW	Pressure
Sulfuric Acid Metering Pumps Discharge Line	Sulfuric Acid Feed Area Sump	1/2	CPVC	SA-1/2-CPVC	80	N/A	SW	Pressure
Sodium Bisulfite Storage Tote	Sodium Bisulfite Metering Pumps	1 ½	CPVC	SBS-1 1/2-CPVC	80	N/A	SW	Pressure
Sodium Bisulfite Metering Pumps Discharge Line	Chemical Trench	3/4	CPVC	SBS-3/4-CPVC	80	N/A	SW	Pressure
Sodium Bisulfite Storage Tote Suction Line	Sodium Bisulfite Containment Area Sump	1 1/2	CPVC	SBS-1 1/2-CPVC	80	N/A	SW	Pressure
Sodium Bisulfite Metering Pumps Discharge Line	Sodium Bisulfite Feed Area Sump	3/4	CPVC	SBS-3/4-CPVC	80	N/A	SW	Pressure
Caustic Soda Storage Tote	Caustic Soda Metering Pumps	2 ½	CPVC	CAS-2 1/2-CPVC	80	N/A	SW	Pressure
Caustic Soda Metering Pumps Discharge Line	Chemical Trench	1 1/2	CPVC	CAS-1 1/2-CPVC	80	N/A	SW	Pressure
Caustic Soda Storage Tote Suction Line	Caustic Soda Containment Area Sump	2 ½	CPVC	CAS-2 1/2-CPVC	80	N/A	SW	Pressure
Citric Acid Storage Tote Suction Line	Citric Acid Containment Area Sump	2 1/2	CPVC	CA-2 1/2-CPVC	80	N/A	SW	Pressure
Citric Acid Metering Pumps Discharge Line	Citric Acid Feed Area Sump	1 1/2	CPVC	CA-1 1/2-CPVC	80	N/A	SW	Pressure

From	To	Pipe Size	Material	Pipe Number	Class	Lining	Joints	Service
Sulfuric Acid Storage Tote	Sulfuric Acid Metering Pumps	1	CPVC	SA-1-CPVC	80	N/A	SW	Pressure
Sulfuric Acid Metering Pumps Discharge Line	Chemical Trench	½	CPVC	SA-1/2-CPVC	80	N/A	SW	Pressure
Sulfuric Acid Storage Tote Suction Line	Sulfuric Acid Containment Area Sump	1	CPVC	SA-1-CPVC	80	N/A	SW	Pressure
Sulfuric Acid Metering Pumps Discharge Line	Sulfuric Acid Feed Area Sump	1/2	CPVC	SA-1/2-CPVC	80	N/A	SW	Pressure
Sodium Bisulfite Storage Tote	Sodium Bisulfite Metering Pumps	1 ½	CPVC	SBS-1 1/2-CPVC	80	N/A	SW	Pressure
Sodium Bisulfite Metering Pumps Discharge Line	Chemical Trench	3/4	CPVC	SBS-3/4-CPVC	80	N/A	SW	Pressure
Sodium Bisulfite Storage Tote Suction Line	Sodium Bisulfite Containment Area Sump	1 1/2	CPVC	SBS-1 1/2-CPVC	80	N/A	SW	Pressure
Sodium Bisulfite Metering Pumps Discharge Line	Sodium Bisulfite Feed Area Sump	3/4	CPVC	SBS-3/4-CPVC	80	N/A	SW	Pressure
Caustic Soda Storage Tote	Caustic Soda Metering Pumps	2 ½	CPVC	CAS-2 1/2-CPVC	80	N/A	SW	Pressure
Caustic Soda Metering Pumps Discharge Line	Chemical Trench	1 1/2	CPVC	CAS-1 1/2-CPVC	80	N/A	SW	Pressure
Caustic Soda Storage Tote Suction Line	Caustic Soda Containment Area Sump	2 ½	CPVC	CAS-2 1/2-CPVC	80	N/A	SW	Pressure
Caustic Soda Metering Pumps Discharge Line	Caustic Soda Feed Area Sump	1 1/2	CPVC	CAS-1-CPVC	80	N/A	SW	Pressure
POT-2-COP (Buried)	Emergency Eyewash and Shower Stations in MFS Chemical Facility	2	COP	POT-2-COP	Type K	N/A	S	Pressure
ACH FACILITY								
ACH Storage Tote	ACH Metering Pumps	½	CPVC	ACH-1/2-CPVC	80	N/A	SW	Pressure
ACH Metering Pumps	Chemical Trench	¼	CPVC	ACH-1/4-	80	N/A	SW	Pressure

From	To	Pipe Size	Material	Pipe Number	Class	Lining	Joints	Service
Discharge Line				CPVC				
ACH Storage Tote Suction Line	ACH Containment Area Sump	½	CPVC	ACH-1/2-CPVC	80	N/A	SW	Pressure
ACH Metering Pumps Discharge Line	ACH Feed Area Sump	1/4	CPVC	ACH-1/4-CPVC	80	N/A	SW	Pressure
POT-2-COP (Buried)	Emergency Eyewash and Shower Stations in ACH Facility	2	COP	POT-2-COP	Type K	N/A	SS	Pressure
MODIFIED BULK SODIUM HYPOCHLORITE FACILITY								
Existing Sodium Hypochlorite Pump Suction Lines	Sodium Hypochlorite Metering Pumps	¼	CPVC	SHY-1/4-CPVC	80	N/A	SW	Pressure
Sodium Hypochlorite Metering Pumps Discharge Line	Chemical Trench	¼	CPVC	SHY-1/4-CPVC	80	N/A	SW	Pressure

++ END OF SECTION ++

SECTION 15061

DUCTILE IRON PIPE

PART 1 - GENERAL

1.1 SUMMARY

A. Scope:
   1. CONTRACTOR shall provide all labor, materials, equipment, and incidentals as shown, specified, and required to furnish and install ductile iron pipe and fittings.
   2. The extent of ductile iron pipe is shown on the Drawings and in the Schedules included in Section 15051, Buried Piping Installation, and Section 15052, Exposed Piping Installation.
   3. All pipe and fittings shall be restrained.

1.2 RELATED SECTIONS

A. Section 02315, Earthwork, Excavation, and Backfill.

B. Section 09900, Painting.

C. Section 15051, Buried Piping Installation.

D. Section 15052, Exposed Piping Installation.

E. Section 15120, Piping Specialties and Accessories.

1.3 REFERENCES

A. Manufacturers' Qualifications:
   1. Manufacturer shall have a minimum of five years of experience producing ductile iron pipe and fittings and shall show evidence of at least five installations in satisfactory operation.

B. Reference Standards: Comply with applicable provisions and recommendations of the following, except as otherwise shown or specified.
   1. AWWA C104, Cement Mortar Lining for Ductile Iron Pipe and Fittings for Water.
   2. AWWA C105, Polyethylene Encasement for Ductile Iron Pipe Systems.
   3. AWWA C110, Ductile Iron and Gray Iron Fittings, 3-inches through 48-inches, for Water and Other Liquids.
   4. AWWA C111, Rubber Gasket Joints for Ductile Iron Pressure Pipe and Fittings.
   5. AWWA C115, Flanged Ductile Iron Pipe with Threaded Flanges.

6. AWWA C116, Protective Fusion-Bonded Epoxy Coatings for the Interior and Exterior Surfaces of Ductile Iron and Gray Iron Fittings for Water Supply Service.
7. AWWA C150, Thickness Design of Ductile Iron Pipe.
8. AWWA C151, Ductile Iron Pipe, Centrifugally Cast, for Water or Other Liquids.
9. ASME B16.1, Grey Iron Pipe Flanges and Flanged Fittings.
10. ASME B18.2.1, Square, Hex, Heavy Hex, and Askew Bolts and Hex, Heavy Hex, Hex Flange, Lobed Head, and Lay screws (Inch series).
11. ASME B18.2.2, Machine screw nuts, hex, square, hex flange, and coupling nuts.
12. ASTM A307, Specification for Carbon Steel Bolts and Studs, 60,000 psi Tensile Strength.
13. ASTM A354, Specification for Quenched and Tempered Alloy Steel Bolts, Studs and Other Externally Threaded Fasteners.
14. AWWA C600, Installation of Ductile Iron Water Mains and Their Appurtenances.
15. AWWA C153, Ductile Iron Compact Fittings for Water Service.

1.4 SUBMITTALS

A. Shop Drawings: Submit for approval the following:
   1. Letter of Certification of Compliance on materials, equipment, etc.
   2. Final Certified Drawing showing outline dimensions, mounting information, and other pertinent dimensions.
   3. Detailed drawings and data on pipe, fittings, gaskets, and appurtenances. Submit these with Shop Drawings required under Section 15051, Buried Piping Installation, and Section 15052, Exposed Piping Installation.
   4. Installation instructions, operating and/or service manuals, and all other operating data. Preventive maintenance instructions and recommended frequency.
   5. Service data sheets showing design performance, utility requirements, etc., as applicable.
   6. Renewal parts list diagrammatic or cross-section drawings showing part identification. Material analysis or traders designation for each significant part is to be noted on parts lists or on a separate sheet.
   7. Submit test certificates.
   8. A copy of this specification section, with addendum updates included, and all referenced and applicable sections, with addendum updates included, with each paragraph check-marked to indicate specification compliance or marked to indicate requested deviations from specification requirements. Check marks (✓) shall denote full compliance with a paragraph as a whole. If deviations from the specifications are indicated, and therefore requested by the CONTRACTOR, each deviation shall be underlined and denoted by a number in the margin to the right of the identified paragraph, referenced to a detailed written explanation of the reasons for requesting the deviation. The

ENGINEER shall be the final authority for determining acceptability of requested deviations. The CONTRACTOR shall furnish equipment and/or services as specified if an exception and/or deviation is rejected. The remaining portions of the paragraph not underlined will signify compliance on the part of the CONTRACTOR with the specifications. Failure to include a copy of the marked-up specification sections, along with justification(s) for any requested deviations to the specification requirements, with the submittal shall be sufficient cause for rejection of the entire submittal with no further consideration.

9. The CONTRACTOR shall submit the preventive maintenance information package as part of the shop drawing submittal package to the ENGINEER for review and approval. **SHOP DRAWING SUBMITTAL PACKAGE WILL NOT BE APPROVED WITHOUT ACCEPTANCE OF PREVENTIVE MAINTENANCE INFORMATION.**

B. Certificates: Submit Certificates of Compliance with referenced standards.

1.5 PRODUCT DELIVERY, STORAGE, AND HANDLING

A. Refer to Section 15051, Buried Piping Installation, and Section 15052, Exposed Piping Installation.

PART 2 - PRODUCTS

2.1 MATERIALS

A. General: Joints shall be as specified in piping schedules in Section 15051, Buried Piping Installation, and Section 15052, Exposed Piping Installation. If not specified, provide flanged joints for exposed piping and push-on or mechanical joints for buried piping. Couplings shall be provided on pipe with plain ends, where shown or where approved by ENGINEER.

B. Ductile Iron Pipe and Fittings:
   1. Flanged Pipe: Fabricate in accordance with requirements of AWWA C115.
      a. Thickness: As shown on Piping Schedules. If not shown, use Special Thickness Class 53.
      b. All exposed DIP shall be flanged.
      c. Mechanical groove and shouldered type fittings are not acceptable.
   2. Non-Flanged Pipe: Conform to AWWA C151 for material, pressure, dimensions, tolerances, tests, markings, and other requirements.
      a. Pressure: As shown on Piping Schedules. If not shown, use Pressure Class 350 (Buried Piping).
      b. Special Thickness Class 53 (Exposed Piping).
   3. Joints:

a. Flanged Joints: Conform to AWWA C110 and C115 capable of meeting, working, and test pressure specified in Section 15051, Buried Piping Installation, and Section 15052, Exposed Piping Installation.
    1) Gaskets: High temperature resistant sealing compounds (Loctite PST 592) or equivalent with Dimethacrylate ester base and Teflon can be used.
        a) Gaskets: Unless otherwise specified, gasket stock shall be a synthetic rubber, 1/8-inch thick, full face compound in which the elastomer is nitrile or neoprene. The compound shall contain not less than 50% by volume nitrile or neoprene and shall be free from factice, reclaimed rubber, and other deleterious substances. Gaskets shall comply with AWWA C111 for push-on and mechanical joints.
    2) Bolts and Nuts: Conform to ANSI B18.2.1 and ANSI B18.2.2, respectively. Exposed bolts and nuts shall be ASTM A307, Grade B. Buried or submerged bolts and nuts shall be Type 316 stainless steel.
b. Mechanical Joints: Conform to AWWA C153 or AWWA C110 and AWWA C111.
    1) Glands: Ductile iron.
    2) Gaskets: Plain tip.
    3) Bolts and Nuts: High strength, low alloy steel.
c. Push-On Joints: Conform to AWWA C111.
    1) Gaskets: Molded rubber.
    2) Stripes: Each plain end shall be painted with a circular stripe to provide a guide for visual check that joint is properly assembled.
d. Restrained Push-On Joints: Restrained push-on joints shall be capable of being deflected after full assembly. Joint assembly shall be in strict conformance with AWWA C600 and manufacturer's recommendations. No field cuts of restrained pipe are permitted without prior approval of the ENGINEER.
e. Restrained Mechanical Joints:
    1) Restrained joints for mechanical joint piping shall be one of the following:
        a) Push-On-Restrained Joint, as manufactured by Clow Cast Iron Pipe and Foundry Division of the Clow Corporation.
        b) Megalug, as manufactured by EBBA Iron Sales, Inc.
        c) Or equal.
    2) Restrained joints for push-on joint piping shall be one of the following:
        a) Clow Super-lock Joint Pipe Style F-128, as manufactured by Clow Cast Iron Pipe and Foundry Division of Clow Corporation.
        b) Lok-Ring Joint, as manufactured by American Cast Iron Pipe Company.

c) Push-On Restrained piping shall be provided by a single manufacturer.
d) Or equal.

4. Flanged Fittings: Conform to AWWA C110 or C115.
   a. Pressure Rating: 350 psig.
   b. Material: Ductile iron.
   c. Gaskets: As specified above for joints.
   d. Bolts and Nuts: As specified above for joints.
5. Mechanical Joint Fittings: Conform to AWWA C110 or AWWA C153.
   a. Pressure Rating: 350 psig.
   b. Material: Ductile iron.
   c. Glands: Use ductile iron glands only. Cast iron glands are not allowed.
   d. Gaskets: As specified above for joints.
   e. Bolts and Nuts: As specified above for joints.
6. Coatings:
   a. Bituminous Coatings: Buried pipe and fittings shall be coated on the outside with a bituminous coating, approximately 1 mil thick. Buried pipe shall be provided with polyethylene encasement in accordance with Section 15051, Buried Piping Installation.
   b. Polywrap: All buried ductile iron pipe, valves, and fittings shall be wrapped in a polyethylene sleeve or sheet for protection against corrosive soils. The polyethylene sleeve for protective wrap shall conform to the requirements of ANSI/AWWA C105/A21.5-05 and be as manufactured by the American Cast Iron Pipe Company or equal. Installation of polyethylene wrap shall be per MAG 610.
   c. Painted: Exposed pipe shall be prime coated in accordance with Section 09900, Painting. Field painting shall be performed in accordance with Paragraph 2.3 of this Section.
7. Linings:
   a. Provide linings as specified in the Pipe Schedules. Pipe and fittings shall be lined with the same materials.
   b. Cement mortar lining shall be performed in accordance with AWWA C104.
   c. Bituminous seal coating shall be performed in accordance with AWWA C104.
   d. Epoxy Lining:
      1) Condition of Ductile Iron Prior to Surface Preparation:
         a) No asphalt, cement, or other lining shall be applied to interior of pipe and fittings prior to epoxy lining.
         b) No asphalt, cement, or other coating shall be applied to the first 6-inches of the exterior of the pipe ends.
      2) Epoxy Lining Material: The material shall be an amine cured novalac epoxy containing at least 20% by volume of ceramic quartz pigment. Epoxy lining material manufacturer shall demonstrate a successful history of lining pipe and fittings for sewer service and

submit a test report verifying the following properties and a certification of the test results.

a) A permeability rating of 0.00 when tested according to Method A of ASTM E96-66, Procedure A, with a test duration of 30 days.
b) The following tests shall be run on coupons from factory lined ductile iron pipe:
    i. ASTM B1117 Salt Spray (scribed panel): Results to equal 0.0 undercutting after two years.
    ii. ASTM G95 Cathodic Disbondment 1.5 volts @ 77° F: Results to equal no more than 0.5 mm undercutting after 30 days.
    iii. Immersion Testing rated using ASTM D714-87:
        i) 20% Sulfuric Acid: No effect after two years.
        ii) 25% Sodium Hydroxide: No effect after two years.
        iii) 160° F Distilled Water: No effect after two years.
        iv) 120° F Tap Water (scribed panel): 0.0 undercutting after two years with no effect.
c) An abrasion resistance of no more than 4 mils loss after one million cycles - European Standard EN 598: 1994 Section 7.8 Abrasion Resistance.

3) Interior of the pipe shall receive 40 mils dry film thickness.
4) Applicator: The lining shall be applied by a competent firm with a successful history of applying linings to the interior of ductile iron pipe and fittings.
5) Surface Preparation: Pipe surfaces shall be cleaned and sandblasted prior to lining application in accordance with manufacturer's recommended procedures.
6) Inspection and Certification:
    a) All ductile iron pipe and fitting linings shall be checked for thickness using a magnetic film thickness gauge. The thickness testing shall be done using the method outlined in SSPC-PA-2 Film Thickness Rating.
    b) The interior lining of all pipe barrels and fittings shall be tested for pinholes with a non-destructive 2,500 volt test. Any defects found shall be repaired prior to shipment.
    c) The pipe or fitting manufacturer shall supply a certificate attesting to the fact that the applicator met the requirements of this Specification.
7) Produce and Manufacturer: Provide one of the following
    a) Protecto 401.
    b) No other product or manufacturer will be accepted.
8) Mortar lining with an epoxy top coat is not acceptable.

C. Couplings:
    1. Refer to Section 15120, Piping Specialties and Accessories.

D. Specials:
   1. Transition Pieces:
      a. Furnish suitable transition pieces (adapters) for connections to process piping.
   2. Service Saddles:
      a. Provide service saddles where shown or required for small diameter pipe connections.
      b. Style: double bale, model 313 as manufactured by Smith-Blair, or approved equal.

E. Pipe and fittings shall be the product of a single manufacturer.

2.2 MARKING FOR IDENTIFICATION

A. All pipeline materials shall be stamped, marked, or identified with the following:
   1. Name or trade mark of the manufacturer.
   2. Pipe class.
   3. Size and length dimensions.
   4. Date and place of manufacture.

2.3 SURFACE PREPARATION AND SHOP PAINTING

A. Exposed Pipe and Fittings:
   1. Clean and prime coat ferrous metal surfaces of piping in the shop in accordance with the requirements of Section 09900, Painting.
   2. Field painting shall conform with the requirements of Section 09900, Painting.

B. Buried Pipe and Fittings:
   1. Refer to Paragraph 2.1.B.6.b, above.

PART 3 - EXECUTION

3.1 INSTALLATION

A. For buried piping installation, refer to Section 15051, Buried Piping Installation.

B. For exposed piping installation, refer to Section 15052, Exposed Piping Installation.

3.2 INSPECTION

A. CONTRACTOR shall inspect all piping to assure that piping is free from defects in material and workmanship. The compatibility of all pipe, fittings, and coatings shall be verified by CONTRACTOR.

++ END OF SECTION ++

SECTION 15064

COPPER PIPE

PART 1 - GENERAL

1.1 SUMMARY

A. Scope:
   1. CONTRACTOR shall provide all labor, materials, equipment, and incidentals as shown on the Drawings and Section 15051, Buried Piping Installation and Section 15052, Exposed Piping Installation, specified and required to furnish and install copper pipe and fittings.
   2. All jointing materials, end caps and other appurtenances and accessories shall be provided.
   3. It is the intent of the Contract Documents to provide complete and workable piping systems. Any supplementary fittings and appurtenances required for proper completion of the Work shall be considered as having been included under this Section.

1.2 RELATED SECTIONS

A. Section 02315, Earthwork, Excavation, and Backfill.

B. Section 15050, Piping Systems.

C. Section 15051, Buried Piping Installation.

D. Section 15052, Exposed Piping Installation.

E. Section 15120, Piping Specialties and Accessories.

1.3 QUALITY ASSURANCE

A. Manufacturer's Qualifications:
   1. Manufacturer shall have a minimum of five years experience in the production of copper pipe and fittings, and shall be able to show evidence of satisfactory service in at least five installations.
   2. Each type of pipe and fitting shall be obtained from no more than one manufacturer.

B. Requirements of Regulatory Agencies: Comply with the applicable provisions of the following regulatory agencies, where applicable:
   1. ASME, Boiler and Pressure Vessel Code.
   2. National Fire Protection Association.
   3. Underwriters' Laboratories, Incorporated.
   4. Uniform Plumbing Code.

5. State and Local Building Codes and Ordinances.

C. Reference Standards: Comply with applicable provisions and recommendations of the following, except as otherwise shown or specified.
   1. ANSI B16.22, Wrought Copper and Copper Alloy Solder Joint Pressure Fittings.
   2. ANSI B16.26, Cast Copper Alloy Fittings for Flared Copper Tubes.
   3. ASTM B32, Specification for Solder Metal.
   4. ASTM B42, Specification for Seamless Copper Pipe, Standard Size.
   5. ASTM B68, Specification for Seamless Copper Tube, Bright Annealed.
   6. ASTM B75, Specification for Seamless Copper Tube.
   7. ASTM B88, Specification for Seamless Copper Water Tube.
   8. ASTM B280, Specification for Seamless Copper Tube for Air-Conditioning and Refrigeration Field Service.
   9. ASTM B302, Specification for Threadless Copper Pipe, Standard Sizes.
   10. ASTM B306, Specification for Copper Drainage Tube (DWV).

D. Inspection: The quality of all materials provided and adequacy of installation shall be subject to the review and approval of the ENGINEER.

1.4 SUBMITTALS

A. Shop Drawings: Submit for approval the following:
   1. Detailed drawings and data on pipe fittings and appurtenances. Submit these with Shop Drawings required under Section 15051, Buried Piping Installation, and Section 15052, Exposed Piping Installation.
   2. A copy of this specification section, with addendum updates included, and all referenced and applicable sections, with addendum updates included, with each paragraph check-marked to indicate specification compliance or marked to indicate requested deviations from specification requirements. Check marks (✓) shall denote full compliance with a paragraph as a whole. If deviations from the specifications are indicated, and therefore requested by the CONTRACTOR, each deviation shall be underlined and denoted by a number in the margin to the right of the identified paragraph, referenced to a detailed written explanation of the reasons for requesting the deviation. The ENGINEER shall be the final authority for determining acceptability of requested deviations. The CONTRACTOR shall furnish equipment and/or services as specified if an exception and/or deviation is rejected. The remaining portions of the paragraph not underlined will signify compliance on the part of the CONTRACTOR with the specifications. Failure to include a copy of the marked-up specification sections, along with justification(s) for any requested deviations to the specification requirements, with the submittal shall be sufficient cause for rejection of the entire submittal with no further consideration.
   3. The CONTRACTOR shall submit the preventive maintenance information package as part of the shop drawing submittal package to the ENGINEER

for review and approval. **SHOP DRAWING SUBMITTAL PACKAGE WILL NOT BE APPROVED WITHOUT ACCEPTANCE OF PREVENTIVE MAINTENANCE INFORMATION.**

B. Certificates: Where specified or otherwise required by the ENGINEER submit test certificates. Submit certificates of compliance with referenced standards.

1.5 PRODUCT DELIVERY, STORAGE, AND HANDLING

A. Refer to Section 15051, Buried Piping Installation, and Section 15052, Exposed Piping Installation.

PART 2 - PRODUCTS

2.1 MATERIALS

A. Potable Piping: Potable piping shall conform to the requirements of ASTM B88. Underground, buried piping, unless otherwise specified, shall be Type K. All fittings shall be soldered, except at valves which may be flared, compression types or threaded type supplied with solder socket by threaded adaptors. Exposed piping shall be Type L, unless otherwise specified.

B. Threadless Copper Pipe: Pipe shall be assembled with brazing-joint pipe fittings. Material shall conform to ASTM B302.
Copper Drainage Pipe: Pipe for sanitary drainage or soil, waste and vent pipe, shall conform to ASTM B306.

D. Couplings and fittings for copper tubing:
   1. Unless otherwise specified, couplings for copper tubing 1/2-inch and smaller nominal diameter shall be compression type, bronze or brass, capable of holding the full bursting strength of the tubing and shall meet the requirements of ANSI B16.26.
   2. Product and Manufacturer: Provide fittings and couplings for copper tubing by one of the following:
      a. Swagelok.
      b. Gyrolok.
      c. Or equal.

2.2 JOINTS

A. Potable water piping shall be assembled with soldered type joints. Fittings shall conform to ANSI B 16.22, Wrought Copper and Copper Alloy Solder Joint Pressure Fittings.
   1. Soldered joints shall be 95-5 tin- antimony solder, conforming to ASTM B32

B. All joints shall conform to manufacturer's recommendations and shall be made by skilled workmen.

C. Joints shall develop full strength and shall be greater than the pipe joined.

2.3 MARKING

A. All items shall be marked or labeled with the following information:
   1. Metal or alloy designation.
   2. Temper.
   3. Size and schedule.
   4. ASTM specification number.
   5. Name and location of supplier.

PART 3 - EXECUTION

3.1 INSTALLATION

A. Refer to Section 15050, Piping Systems, Section 15051, Buried Piping Installation, for installation, testing and cleaning.

B. Refer to Section 15050, Piping Systems, and Section 15052, Exposed Piping Installation, for installation, testing and cleaning.

C. Dielectric Protection: Copper tubing or fittings shall not be permitted to come in contact with steel piping, reinforcing steel, or other steel at any location. Electrical checks shall be made to ensure no contact is made between copper tubing and steel elements. Wherever electrical contact is demonstrated by such tests, CONTRACTOR shall provide dielectric protection as specified in Section 15120, Piping Specialties and Accessories.

++ END OF SECTION ++

SECTION 15065

THERMOPLASTIC PIPE AND ACCESORIES

PART 1 - GENERAL

1.1 SUMMARY

A. Scope:
   1. Provide all labor, materials, equipment and incidentals as shown on the Drawings and Section 15051, Buried Piping Installation and Section 15052, Exposed Piping Installation, specified and required to furnish and install and place in satisfactory service, polyvinyl chloride (PVC) piping and chlorinated polyvinyl chloride (CPVC) piping, fittings and specials.

B. Coordination:
   1. Review installation procedures under other Sections and coordinate with the Work that is related to this Section.

1.2 Related Sections

A. Section 02315, Earthwork, Excavation and Backfill.

B. Section 09900, Painting.

C. Section 11295, Hydraulic Valves.

D. Section 15050, Piping Systems.

E. Section 15051, Buried Piping Installation.

F. Section 15052, Exposed Piping Installation.

1.3 QUALITY ASSURANCE

A. Manufacturer's Qualifications:
   1. Manufacturer shall have a minimum of five years experience in the production of thermoplastic pipe and fittings, and shall be able to show evidence of satisfactory service in at least five installations.
   2. Thermoplastic pipe and fittings shall be the product of one manufacturer.

B. Reference Standards:
   1. Comply with applicable provisions and recommendations of the following, except as otherwise shown or specified.
   2. ASTM D1598, Test for Time-to-Failure of Plastic Pipe Under Constant Internal Pressure.

3. ASTM D1599, Test for Short-Time Rupture Strength of Plastic Pipe, Tubing, and Fittings.
4. ASTM D2122, Determining Dimensions of Thermoplastic Pipe and Fittings.
5. ASTM D1784, Rigid Poly (Vinyl Chloride) PVC Compounds and Chlorinated Poly (Vinyl Chloride) CPVC Compounds.
6. ASTM D1785, Poly (Vinyl Chloride) (PVC) Plastic Pipe, Schedules 40, 80, and 12.0
7. ASTM D2467, Socket-Type Poly (Vinyl Chloride) (PVC) Plastic Pipe Fittings.
8. ASTM D2564, Solvent Cements for Poly (Vinyl Chloride) (PVC) Plastic Pipe and Fittings.
9. ASTM D2774, Underground Installation of Thermoplastic Pressure Piping.
10. ASTM D2846, Chlorinated Poly (Vinyl Chloride) Plastic Hot Water Distribution Systems.
11. ASTM D3034, Type PSM Poly (Vinyl Chloride) (PVC) Sewer Pipe and Fittings.
12. ASTM F437, Threaded Chlorinated Poly (Vinyl Chloride) (CPVC) Plastic Pipe Fittings, Schedule 80.
13. ASTM F439, Socket-Type Chlorinated Poly (Vinyl Chloride) (CPVC) Plastic Pipe Fittings, Schedule 80.
14. ASTM F441, Chlorinated Poly (Vinyl Chloride) (CPVC) Plastic Pipe, Schedules 40 and 80.
15. ASTM F477, Elastomeric Seals (Gaskets) for Joining Plastic Pipe.
16. ASTM F493, Solvent Cements for Chlorinated Poly (Vinyl Chloride) (CPVC) Plastic Pipe and Fittings.
17. Standard No. 14, National Sanitation Foundation.
18. American National Standards Institute.
19. AWWA C900, Polyvinyl Chloride (PVC) Pressure Pipe and Fabricated Fittings, 4-inches through 12-inches, for Water Distribution.
20. AWWA C901, Polyethylene (PE) Pressure Pipe and Tubing, 1/2-inch through 3-inches for Water Service.
21. ASTM D2152, Standard Test Method for Adequacy of Fusion of Extruded Poly (Vinyl Chloride) (PVC) Pipe and Molded Fittings by Acetone Immersion.
22. ASTM D2241, Standard Specification for Poly (Vinyl Chloride) (PVC) Pressure-Rated Pipe (SDR Series).
23. ASTM D2837, Standard Test Method for Obtaining Hydrostatic Design Basis for Thermoplastic Pipe Materials.
24. ASTM D2855, Standard Practice for Making Solvent-Cemented Joints with Poly (Vinyl Chloride) (PVC) Pipe and Fittings.
25. ASTM D3139, Standard Specification for Joints for Plastic Pressure Pipes Using Flexible Elastomeric Seals.
26. ASTM D2239, Standard Specification for Polyethylene (PE) Plastic Pipe (SIDR-PR) Based on Controlled Inside Diameter.
27. ASTM 2737, Standard Specification for Polyethylene (PE) Plastic Tubing.

28. ASTM D3350, Standard Specification for Polyethylene Plastics Pipe and Fittings Materials.
29. ASTM F412, Standard Terminology Relating to Plastic Piping Systems.

C. Shop Tests:
   1. Piping manufacturer shall maintain a continuous quality control program.
   2. All PVC and CPVC plastic molding materials used to manufacture pipe and fittings under this Section shall be tested for conformance to the requirements of ASTM D 1784 and ASTM D1785.

1.4 SUBMITTALS

A. Shop Drawings:
   1. Submit for approval the following:
      a. Detailed procedures to be used in jointing and installing piping system including manufacturer's recommendations.
      b. Interfacing of piping system to equipment and appurtenances.
      c. Detail requirements for burial, supports, anchors, guides, expansion joints, and all accessories required for a satisfactory piping system.
      d. Bill of materials, indicating material composition of pipe, fittings and solvent, pressure rating, nominal size and its location on the piping installation drawings.
      e. Certifications letter from pipe manufacturer confirming that the materials to be used are suitable for the intended service.
      f. Submit these with Shop Drawings required under Section 15051, Buried Piping Installation and Section 15052, Exposed Piping Installation.
      g. A copy of this specification section, with addendum updates included, and all referenced and applicable sections, with addendum updates included, with each paragraph check-marked to indicate specification compliance or marked to indicate requested deviations from specification requirements. Check marks (✓) shall denote full compliance with a paragraph as a whole. If deviations from the specifications are indicated, and therefore requested by the CONTRACTOR, each deviation shall be underlined and denoted by a number in the margin to the right of the identified paragraph, referenced to a detailed written explanation of the reasons for requesting the deviation. The ENGINEER shall be the final authority for determining acceptability of requested deviations. The CONTRACTOR shall furnish equipment and/or services as specified if an exception and/or deviation is rejected. The remaining portions of the paragraph not underlined will signify compliance on the part of the CONTRACTOR with the specifications. Failure to include a copy of the marked-up specification sections, along with justification(s) for any requested deviations to the specification requirements, with the submittal shall be sufficient cause for rejection of the entire submittal with no further consideration.

h. The CONTRACTOR shall submit the preventive maintenance information package as part of the shop drawing submittal package to the ENGINEER for review and approval. **SHOP DRAWING SUBMITTAL PACKAGE WILL NOT BE APPROVED WITHOUT ACCEPTANCE OF PREVENTIVE MAINTENANCE INFORMATION.**

B. Certificates:
   1. Submit certificates of compliance with referenced standards.
   2. If clarifications are needed to any of the Paragraphs in the Specification Sections due to deviations, they shall be addressed next to the Paragraph as such and explained further with any additional information necessary.
   3. If any exceptions and/or deviations are proposed to any of the Specifications, they shall be clearly noted as such in the Submittal, and an explanation of any deviation and/or exception shall be provided.
   4. The CONTRACTOR shall furnish equipment and/or services as specified if an exception and/or deviation is rejected.
   5. Failure to include a copy of the marked-up specification sections, along with justification(s) for any requested deviations to the specification requirements, with the submittal shall be sufficient cause for rejection of the entire submittal with no further consideration.

1.5 PRODUCT DELIVERY, HANDLING, AND STORAGE

A. Delivery:
   1. All necessary precautions shall be taken to prevent damage to pipe fittings and other materials during shipment and delivery.
   2. All materials shall be securely fastened to truck or rail car to prevent movement or damage during shipment.
   3. All materials shall be inspected by CONTRACTOR, upon delivery to the site.

B. Handling:
   1. All pipe materials shall be handled to prevent damage.
   2. Pipe and fittings shall not be dropped, rolled, or pushed off from any height on delivery, storage or installation.

C. Storage:
   1. All pipe materials shall be stored off the ground.
   2. Pipe ends shall be secured by caps or plugs.
   3. Do not store pipe or fittings in sunlight.
   4. Pipe shall be stored to prevent sagging or bending.
   5. Store off the ground, under cover, and in a dry location.

PART 2 - PRODUCTS

2.1 MATERIALS

A. PVC Pressure Pipe:
   1. PVC pipe shall be Schedule 80, Class 14554B, conforming to ASTM D1784 and ASTM D1785.
   2. Fittings: Fittings and specials for PVC pipe shall be Schedule 80, solvent weld type and shall conform to ASTM D2467 for socket type.
   3. Provide flanged fittings at all valves and equipment with Teflon gaskets, as specified.
   4. Solvent cement shall conform to requirements of ASTM D2564.
   5. Where threaded connections are needed, CONTRACTOR shall use Teflon tape to provide a watertight seal.
   6. Liquid Teflon type products are prohibited.
   7. If connections are used with liquid Teflon type products, then the CONTRACTOR shall remove and clean the threads before applying the Teflon tape.
   8. PVC pressure pipe and fittings 4-inches to 12-inches shall conform to AWWA C900.
   9. CONTRACTOR shall chamfer and deburr pipes at joints to prevent leakage through cemented sockets

B. CPVC Pipe:
   1. CPVC pipe shall be Schedule 80, Class 23447-B, conforming to ASTM D1784 and ASTM F441.
   2. Fittings shall be Schedule 80, solvent welded, socket type, conforming to ASTM F439.
   3. Provide flanged fittings at all valves and equipment with Teflon gaskets as specified.
   4. Solvent cement shall conform to requirements of ASTM F493.
   5. Where threaded connections are needed CONTRACTOR shall use Teflon tape to provide a watertight seal.
   6. Liquid Teflon type products are prohibited.
   7. If connections are used with liquid Teflon type products, then the CONTRACTOR shall remove and clean the threads before applying the Teflon tape.
   8. CONTRACTOR shall chamfer and deburr pipes at joints to prevent leakage through cemented sockets.

C. PVC Gravity Sewer Pipe:
   1. Pipe and fittings shall conform to requirements of ASTM D1784, Class 12454-B and ASTM D3034, SDR 26.
   2. Elastomeric gaskets for joints shall conform to requirements of ASTM F477.

D. Couplings:
   1. Type:
      a. Quick-connect, male adapter with treaded ends for permanent pipe installation, hose shank coupler for hose connection.
   2. Materials:
      a. Body:
         1) Polypropylene.
      b. Cam Arms:
         1) Stainless steel.
      c. Gaskets:
         1) Viton or EPDM.
      d. Ends:
         1) As specified above.
         2) Each adapter provided shall be equipped with adapter cap constructed of same materials.
   3. Product and Manufacturer:
      a. Provide one of the following:
         1) Plastic Piping System, Inc.
         2) Or equal.

E. Hose:
   1. Material of Construction:
      a. Cross-linked polyethylene tube, non-staining, with neoprene cover.
   2. Temperature Rating:
      a. Up to 150° F.
   3. Hose shall be high tensile, horizontal textile braid with helix wire reinforcements.
   4. Each hose shall be fitted with hose shank coupler.
   5. Product and Manufacturer:
      a. Provide one of the following:
         1) Goodyear Rubber Company.
         2) Or equal.

F. Expansion Joints (Bellows Type):
   1. Provide expansion joints as part of the pipe support system, as required.
   2. Provide connections to storage tanks and scrubber vessels with expansion joints to compensate for expansion, contraction and misalignment.
      a. Connections requiring bellows type expansion joints are as follows:
         1) Pump suction lines.
         2) Fill pipes.
         3) Vent pipes.
         4) Blowdown lines.
   3. Features:
      a. Type: Flanged bellows type with three or five convolutions.
      b. Working Pressures (maximum):

1) Three convolutions:
    a) 125 psi.
2) Five convolutions:
    a) 50 psi.

c. Materials of Construction:
1) Bellows:
    a) TFE. Bellows material shall be wrapped around flanges for corrosion protection.
2) Flanges:
    a) Cadmium plated steel.

d. Reinforcing rings around bellows:
    a) Plated for corrosion protection.

e. All expansion joints in gallery piping shall have limit rods for over expansion protection.

f. Rods shall be sized with a safety factor of 1.5 above the maximum force developed.

4. Product and Manufacturers:
a. Provide one of the following:
1) Unaflex, Style.
2) Garlock, Style.
3) Resistoflex, Model.
4) Or equal.

b. Supply type, grade and strength of pipe required to meet the specified service conditions.

c. Submit to ENGINEER for approval.

5. Painting shall conform to requirements of Section 09900, Painting.

2.2 DETAILED REQUIREMENTS

A. Workmanship
1. The pipe shall be homogeneous throughout and free from visible cracks, holes, foreign inclusions or other defects.
2. The pipe shall be uniform in color, opacity, density, and other physical properties.

B. Dimensions and Tolerances:
1. Dimensions and tolerances shall be measured in accordance with ASTM D2122.
2. The eccentricity of the inside and outside circumferences of the pipe walls shall not exceed 12%.

C. Sustained Pressure:
1. The pipe shall not fail, balloon, burst, or weep as defined in ASTM D1598.

D. Burst Pressure:

1. The minimum burst pressure shall be determined in accordance with ASTM D1599.

E. Marking:
   1. Marking on the pipe shall include the following, spaced at intervals of not more than five feet.
      a. Pipe nominal size.
      b. Pipe schedule.
      c. Specification of plastic material.
      d. Type and grade of plastic.
      e. Date and place of manufacture.
   2. Piping and fittings shall be manufactured with a minimum of 2% of titanium oxide for ultraviolet protection.

2.3 ADAPTERS

A. Where required to join piping of different materials, provide the required adapters, as recommended by the thermoplastic pipe manufacturer.

PART 3 - EXECUTION

3.1 INSTALLATION

A. General:
   1. Refer to Section 15050, Piping Systems, Section 15051, Buried Piping Installation, and Section 15052, Exposed Piping Installation, for piping installation, testing, cleaning and acceptance.
   2. Request instructions from ENGINEER before proceeding if there is a conflict between Contract Documents and manufacturer's recommendations.
   3. Pipe, fittings and accessories that are cracked, damaged, not identified or in poor condition will be rejected.

++ END OF SECTION ++

FSECTION 15066

STAINLESS STEEL PIPE

PART 1 - GENERAL

1.1 SUMMARYF

A. Scope:
   1. Provide all labor, materials, equipment and incidentals as shown on the Drawings, specified and required to furnish and install stainless steel pipe and fittings.
   2. The extent of the piping is shown on the Drawings and Section 15051, Buried Piping Installation and Section 15052, Exposed Piping Installation.

1.2 RELATED SECTIONS

A. Section 02315, Earthwork, Excavation, and Backfill.

B. Section 09900, Painting.

C. Section 15051, Buried Piping Installation.

D. Section 15052, Exposed Piping Installation.

E. Section 15120, Piping Specialties and Accessories.

1.3 QUALITY ASSURANCE

A. Manufacturer's Qualifications:
   1. Manufacturer shall have a minimum of five years experience in the production of stainless steel pipe and fittings and shall be able to show evidence of satisfactory service in at least five installations.
   2. Stainless steel pipe and fittings shall be the product of one manufacturer.

B. Reference Standards: Comply with applicable provisions and recommendations of the following, except as otherwise shown or specified.
   1. ANSI B2.1, Pipe Thread.
   2. ANSI B16.1, Cast Iron Pipe Flanges and Flanged Fittings.
   3. ANSI B16.11, Forged Steel Fittings, Socket Welding and Threaded.
   4. ANSI B36.19, Stainless Steel Pipe.
   5. ASTM A182, Specification for Forged or Rolled Alloy-Steel Pipe Flanges, Forged Fittings, and Valves and Parts for High-Temperature Service.
   6. ASTM A193, Specification for Alloy Steel and Stainless Steel Bolting Materials for High-Temperature Service.

7. ASTM A194, Specification for Carbon and Alloy Steel Nuts for Bolts for High-Pressure and High-Temperature Service.
8. ASTM A240, Specification for Heat-Resisting Chromium and Chromium-Nickel Stainless Steel Plate, Sheet, and Strip for Pressure Vessels.
9. ASTM A276, Specification for Stainless Steel Bars and Shapes.
10. ASTM A312, Specification for Seamless and Welded Austenitic Stainless Steel Pipes.
11. ASTM A320, Specification for Alloy Steel Bolting Materials for Low-Temperature Service.
12. ASTM A403, Specification for Wrought Austenitic Stainless Steel Piping Fittings.
13. ASTM A409, Specification for Welded Large Diameter Austenitic Steel Pipe for Corrosive or High Temperature Service.
14. ASTM A480, Specification for General Requirements for Flat-Rolled Stainless and Heat-Resisting Steel Plate, Sheet and Strip.
15. ASTM A774, Specification for As-Welded Wrought Austenitic Stainless Steel Fittings for General Corrosive Service at Low and Moderate Temperatures.
16. ASTM A778, Specification for Welded, Unannealed Austenitic Stainless Steel Tubular Products.
17. AWS D1.1, Structural Welding Code.

1.4 SUBMITTALS

A. Drawings: Submit for approval the following:
   1. Submit detailed Drawings and data for stainless steel pipe and fittings.
   2. Submit laying schedules and detailed plan and profile drawings for all stainless steel piping showing full details of piping, valves, hangers, supports, restraints, couplings, accessories and specials.
   3. Submit design calculations signed and sealed by a Registered Professional Engineer showing that the wall thickness of pipes and fittings, and that the pipe reinforcement at lugs and pipe supports are adequate for all loads imposed by the manufacturer's design and for the specified service conditions.
   4. Coordinate and submit with Shop Drawings required under Section 15051, Buried Piping Installation, and Section 15052, Exposed Piping Installation.
   5. A copy of this specification section, with addendum updates included, and all referenced and applicable sections, with addendum updates included, with each paragraph check-marked to indicate specification compliance or marked to indicate requested deviations from specification requirements. Check marks (✓) shall denote full compliance with a paragraph as a whole. If deviations from the specifications are indicated, and therefore requested by the CONTRACTOR, each deviation shall be underlined and denoted by a number in the margin to the right of the identified paragraph, referenced to a detailed written explanation of the reasons for requesting the deviation. The ENGINEER shall be the final authority for determining acceptability of requested deviations. The CONTRACTOR shall furnish equipment and/or services as specified if an

exception and/or deviation is rejected. The remaining portions of the paragraph not underlined will signify compliance on the part of the CONTRACTOR with the specifications. Failure to include a copy of the marked-up specification sections, along with justification(s) for any requested deviations to the specification requirements, with the submittal shall be sufficient cause for rejection of the entire submittal with no further consideration.

6. The CONTRACTOR shall submit the preventive maintenance information package as part of the shop drawing submittal package to the ENGINEER for review and approval. **SHOP DRAWING SUBMITTAL PACKAGE WILL NOT BE APPROVED WITHOUT ACCEPTANCE OF PREVENTIVE MAINTENANCE INFORMATION.**

B. Certificates: Submit certificates of compliance with referenced standards, including welder's certificates.

1.5 PRODUCT DELIVERY, STORAGE AND HANDLING

A. Refer to Section 15051, Buried Piping Installation, and Section 15052, Exposed Piping Installation.

PART 2 - PRODUCTS

2.1 MATERIALS

A. Fabricated Stainless Steel Pipe:
   1. Pipe:
      a. Type: Pipe and fittings less than 3-inch diameter shall be seamless. Pipe 3-inch diameter and larger may be electrically welded or seamless. Spiral welded pipe is not acceptable.
      b. Material: ASTM A312, Type 304L stainless steel.
      c. Diameter: Pipe diameters shown on the Drawings shall mean the nominal outside diameter of the pipe, except for pipes specified with schedule numbers for wall thickness which shall conform to ANSI.
      d. Wall Design Criteria:
         1) Provide a piping system designed to meet the fabrication, installation and service conditions shown on the Drawings and specified.
         2) Based on the internal design pressure indicated for test pressure in Section 15050, Piping Systems and 15052, Exposed Piping Installation.
         3) Support weight of pipe fittings and valves using the support system shown on the Drawings or specified.
         4) Minimum Wall Thickness:
            a) Exposed and Submerged Pipe shall be Schedule 10S, unless otherwise specified in Section 15050, Piping Systems.

b) All stainless steel piping less than 6-inches in diameter shall be Schedule 40S.
c) All stainless steel piping equal to 6-inches in diameter and above shall be Schedule 10S.

e. Fabrication:
1) Longitudinal Seams: Maximum of two per section.
2) Girth Seams: Not less than 6 feet apart, except at fittings and specials.
3) Pipe Ends: Perpendicular to longitudinal axis.
4) Roundness: ±1/16-inch.
5) Straightness: ±1/8-inch in 10 feet.
6) Edges: All joint-edges shall be true so as not to leave a shoulder on the inside of the pipe.

f. Welding:
1) Longitudinal Welds: Tungsten Inert Gas or Metal Inert Gas.
2) Circumferential Welds: Heliarc or metallic air process.
3) Grinding: All interior welds shall be ground smooth to provide an internal bead of 1/16-inch or less.

g. Factory Finish:
1) All pipe and fittings shall be pickled after manufacture by immersion in acid bath until all weld discoloration and iron pickup is removed.
2) Passivate all piping welds after fabrication.
3) Thoroughly wash all pipe and fittings with clear water after pickling.

2. Joints:
a. General:
1) Comply with Section 15052, Exposed Piping Installation.
2) Provide flanged joints at valves and equipment.
3) Provide flanged joints for field assembly of exposed and submerged piping.
4) Provide flexible stainless steel expansion joints, where shown on the Drawings.
5) All joints shall be shop welded, unless otherwise shown on the Drawings or specified.
6) Stainless steel pipe fabricated into spool pieces shall have shop-welded circumferential butt welded joints or flanges.

b. Flanged Joints:
1) Two part flange:
a) Slip-on rolled angle face rings of 1/8-inch stainless for pipe less than 16-inches in diameter and 3/16-inch thick for pipe 16-inches and larger. The angle face ring thickness shall be equal to or greater than the wall of the pipe or fitting to which it is welded and it shall be continuously welded on both sides to the pipe or fitting. The angle leg shall not interfere with the flange bolt holes.

b) Backing Flange: Hot dipped galvanized ductile-iron drilled to ANSI B16.1 Class 125 Standards. For submerged joints, backing flanges shall be stainless steel plate flanges. Minimum flange thickness shall be:

Diameter	Flange Thickness
10-inches to 12-inches	11/16-inch
14-inches to 18-inches	3/4-inch
20-inches to 30-inches	1-inch

2) Gaskets:
   a) Comply with manufacturer's recommendations for service conditions as shown on the Drawings and specified.
   b) Gaskets provided on process air and channel air service shall be neoprene or EPDM suitable for minimum 25 psi pressure and 250° F air temperature.
3) Bolts and Nuts:
   a) Exposed: Type 316 stainless steel.
   b) Submerged: Type 316 stainless steel.

3. Fittings:
   a. Type: Welded or flanged as shown on the Drawings, all stainless steel.
   b. Construction:
      1) Stainless steel fittings, 2-1/2-inch and smaller, shall be ASTM A403, of the same material and pressure rating as the pipe, threaded, long radius with dimensions conforming to ANSI B16.11.
      2) Unless otherwise specified, stainless steel fittings 3-inch and larger shall be of the same material and in the same thicknesses as the pipe. Long radius elbows up to 24-inches in diameter shall be smooth flow. All short radius, special radius and reducing bends and long radius bends greater than 24-inches in diameter shall be of mitered construction. Reducers shall be tapered, cone type. Tees, crosses, laterals and wyes shall be shop-fabricated pipe.
   c. Wall Thickness: Conform to the wall thickness required for service conditions specified, but in no case less than the pipe wall thickness.
   d. Base Fitting: Provide Type 316L stainless steel.
4. Field Assembly of Piping:
   a. Field welding of pipe is not permitted.
   b. Connect exposed and submerged piping with flanges.
5. Threaded Connections: Threaded pipe, gauge or instrument connections shall be made using stainless steel, 150-pound, threaded half-couplings conforming to ASTM A182 or ASTM A276, shop welded to the pipe at the locations specified or shown on the Drawings.

B. Specials:
   1. Taps:

a. Provide taps where shown on the Drawings or required for small pipe and instrument connections.
b. Connections shall be welded, forged threaded Type 316L stainless steel boss.
c. Product and Manufacturer: Provide one of the following:
1) Thredolet by Grinnell Company.
2) Or approved equal.

2. Pipe Adapters: Where necessary to join pipe of different type, provide necessary adapters. Ends shall conform to Specifications for the appropriate type joint.

C. Product and Manufacturers: Pipe and fittings shall be the product of one single manufacturer. Provide one of the following:
1. Alaskan Copper.
2. Felker Brothers Corporation.

2.2 STAINLESS STEEL PIPE AND FITTINGS FOR AIR SERVICE

A. This Section of the Specification covers the stainless steel pipe for air service. See Specification 15052, Exposed Piping Installation, and Drawings locations.

B. Stainless steel pipe for air service shall be welded Schedule 10S conforming to ASTM A778, Grade 316L, and ANSI B36.19 unless noted otherwise. Compound shall be suitable for the service and shall be provided maximum protection against corrosion and leakage. Stainless steel pipe manifolds for air service shall be coated as specified in Section 09900, Painting.

C. Stainless steel fittings shall be the butt welding, smooth flow type, and shall be Schedule 10S unless noted otherwise. Stainless steel fittings shall conform to ASTM A774 Grade WP316L, ANSI B16.9, or Class CR, Grade CR316L, MSS SP-43.

D. Stainless steel flanges shall be forged stainless steel, raised-free, weld-neck type, or slip-on weld per AWWA C207, Class D ASTM A240 TP 316 L, ASTM A182, Grade F316. Drilling and OD matching ANSI B16.5 Class 150 steel flange standard, MSS SP-42 150 lb. corrosion resistant valve standard. Weld-neck flanges shall be bored to match pipe inside diameter.

E. The CONTRACTOR shall ensure coordination of dimensions and drilling patterns of all piping, fittings, specials, valves and ancillary items. Nuts and bolts shall have hexagonal patterns. Diameters of flange bolts for each size of flange shall conform to ANSI standard specifications and the lengths shall be such that the installed projections are not less than 1/8-inch nor greater than 3/8-inch beyond the outer nut face.

F. Pipe and fittings shall be capable of withstanding a continuous working pressure of 150 psi at 200° F.

2.3 IDENTIFICATION

A. All pipeline materials shall be stamped, marked or identified with the following:
   1. Name of manufacturer.
   2. Date of manufacture.
   3. Operating design pressure at operating design temperature.
   4. Type of service.
   5. Manufacturer's part number.

PART 3 - EXECUTION

3.1 INSPECTION

A. Inspect all piping to ensure that piping is free of defects in material and workmanship.

3.2 INSTALLATION

A. For buried piping installation, refer to Section 15051, Buried Piping Installation.

B. For exposed piping installation, refer to Section 15052, Exposed Piping Installation.

C. Field welded pipe joints are prohibited.

++ END OF SECTION ++

SECTION 15104

CONCRETE PIPE

PART 1 - GENERAL

1.1 SUMMARY

A. Scope:
   1. Provide all labor, materials, equipment, and incidentals as shown on the Drawings, specified, and required to furnish and reinforced concrete pipe, fittings, specials and appurtenances.

1.2 RELATED SECTIONS

A. Section 15051, Buried Piping Installation.

1.3 QUALITY ASSURANCE

A. Manufacturer's Qualifications:
   1. Manufacturer shall have a minimum of five years of experience of producing substantially similar equipment and shall be able to show evidence of at least five installations in satisfactory operation for at least five years.
   2. Each type of concrete pipe and fittings shall be the product of one manufacturer.

B. Reference Standards: Comply with applicable provisions and recommendations of the following, except as otherwise shown or specified.
   1. ASTM A36, Specification for Carbon Structural Steel.
   2. ASTM A283, Specification for Low and Intermediate Tensile Strength Carbon Steel Plates.
   3. ASTM A497, Specification for Steel Welded Wire Fabric, Deformed, for Concrete Reinforcement.
   4. ASTM A569, Specification for Steel, Carbon, Hot-Rolled Sheet and Strip Commercial Quality.
   5. ASTM A570, Specification for Steel, Sheet and Strip, Carbon, Hot-Rolled, Structural Quality.
   6. ASTM A615, Specification for Deformed and Plain Billet-Steel Bars for Concrete Reinforcement.
   7. ASTM A663, Specification for Steel Bars, Carbon, Merchant Quality, Mechanical Properties.
   8. ASTM C14, Specification for Concrete Sewer, Storm Drain, and Culvert Pipe.
   9. ASTM C33, Specification for Concrete Aggregates.
   10. ASTM C76, Specification for Reinforced Concrete Culvert, Storm Drain, and Sewer Pipe.
   11. ASTM C94, Specification for Ready-Mixed Concrete.

12. ASTM C150, Specification for Portland Cement.
13. ASTM C361, Specification for Reinforced Low-Head Pressure Pipe.
14. ASTM C387, Specification for Packaged, Dry, Combined Materials for Mortar and Concrete.
15. ASTM C443, Specification for Joints for Circular Concrete Sewer and Culvert Pipe, Using Rubber Gaskets.
16. ASTM C478, Specification for Precast Reinforced Concrete Manhole Sections.
17. AWWA C208, Fabricated Steel Water Pipe Fittings.
18. AWWA C303, Concrete Pressure Pipe, Bar Wrapped, Steel Cylinder Type.
19. AWWA Manual M9, Concrete Pressure Pipe.
20. Maricopa Association of Governments Standard Specifications.

C. Inspection: The quality of all materials, process of manufacture, and the finished pipe shall be subject to the inspection and approval of the ENGINEER.

D. Shop Tests: Manufacturer shall conduct all shop tests in accordance with the requirements of AWWA C303.

1.4 SUBMITTALS

A. Shop Drawings: Submit for approval the following:
1. Detailed drawings and data on pipe, fittings, gaskets, and appurtenances. Submit these with Shop Drawings required under Section 15051, Buried Piping Installation.
2. A copy of this specification section, with addendum updates included, and all referenced and applicable sections, with addendum updates included, with each paragraph check-marked to indicate specification compliance or marked to indicate requested deviations from specification requirements. Check marks (✓) shall denote full compliance with a paragraph as a whole. If deviations from the specifications are indicated, and therefore requested by the CONTRACTOR, each deviation shall be underlined and denoted by a number in the margin to the right of the identified paragraph, referenced to a detailed written explanation of the reasons for requesting the deviation. The ENGINEER shall be the final authority for determining acceptability of requested deviations. The CONTRACTOR shall furnish equipment and/or services as specified if an exception and/or deviation is rejected. The remaining portions of the paragraph not underlined will signify compliance on the part of the CONTRACTOR with the specifications. Failure to include a copy of the marked-up specification sections, along with justification(s) for any requested deviations to the specification requirements, with the submittal shall be sufficient cause for rejection of the entire submittal with no further consideration.
3. The CONTRACTOR shall submit the preventive maintenance information package as part of the shop drawing submittal package to the ENGINEER for review and approval. **SHOP DRAWING SUBMITTAL PACKAGE WILL**

NOT BE APPROVED WITHOUT ACCEPTANCE OF PREVENTIVE MAINTENANCE INFORMATION.

B. The manufacturer shall submit design calculations to the ENGINEER. The design calculations shall be signed and sealed by a Registered Professional Engineer licensed in the State of Arizona. The design calculations shall indicate that the pipe wall thickness will be satisfactory for all conditions of external pressure and earth loadings, special physical loadings, and internal pressure.

C. Certificates: Submit Certificates of Compliance with referenced standards.

D. Product Data: Couplings, materials, and pipe lining and coating.

1.5 PRODUCT DELIVERY, STORAGE, AND HANDLING

A. Refer to Section 15051, Buried Piping Installation.

B. Install cross bracing at ends of pipe and fittings to eliminate excessive deflection. Keep braces in place until backfilling and compaction have been completed.

C. Store pipe and fittings on skids, sand or dirt berms, sand bags or tires, or other suitable means to prevent damage to pipe and fittings.

D. Inspect pipe lining and coating immediately before installation for damage and holidays. Correct deficiencies.

PART 2 - PRODUCTS

2.1 SERVICE CONDITIONS

A. General:
   1. Pipe shall be designed for an external live loading, including impact, equal to AASHTO H-20 truck loading. The external loading shall be calculated in accordance with MAG Section 758.

B. The allowable combined load compressive stress in the concrete shall not exceed 45% of the 28-day strength.

C. Service Conditions:
   1. Liquid Service: Surface Water
   2. Maximum Working Pressure: 10 psi.
   3. Pipe Overburden and Trench Bedding Condition: Refer to Drawings.

2.2 CONCRETE PIPE FOR GRAVITY OR LOW HEAD SERVICE

A. Reinforced Concrete Pipe shall be minimum Class IV, Wall B in accordance with ASTM C 76 for pipe diameters 12-inches through 21-inches. Pipe shall be minimum Class III, Wall B in accordance with ASTM C76 for pipe diameters greater than 21-inches diameter
   1. Cement shall be Type II/V conforming to ASTM C 150.
   2. The minimum Portland cement content shall be 564 pounds per cubic yard.
   3. The water/cement ratio shall not exceed 0.49.
   4. Elliptical reinforcing is not permitted.
   5. The area of the outer circular reinforcing cage shall not be less than 75 percent of the inner cage.
   6. Provide the ENGINEER with a Certificate of Compliance from the pipe manufacturer that the pipe and concrete mix conform in all respects to these Specifications and other non-conflicting requirements of the referenced ASTM Specifications.
   7. Product and Manufacturer: Provide one of the following:
      a. Rinker
      b. Forterra
      c. Or equal.

B. Joints:
   1. Joints shall be O-Ring rubber gasket type with captive gasket in groove conforming to ASTM C 443.
   2. Elbows for pipe shall be shop fabricated of the same material, joint design, and strength rating as the pipe.
   3. Beveled joints and standard fittings conforming to ASTM C 361 shall be used for changes in pipe direction. Deflection of joints that exceed 50-percent of the manufacture's allowable joint deflection are not acceptable.

C. Concrete and Reinforcing Steel:
   1. Concrete for fittings, collars, and manholes shall be ready-mixed conforming to ASTM C 94, Alternate 2, with a 28-day compressive strength of 2,500 psi.
   2. Maximum size of aggregate shall be 1-1/2-inches.
   3. Slump shall be between 2- and 4-inches. Reinforcing steel shall be deformed bars of sizes shown conforming to ASTM A 615, Grade 40.

D. Gravel for Pipe Bedding:
   1. Conform to the requirements specified in Section 15051, Buried Piping Installation. Fabricated steel plate for pipe specials and fittings shall be designed to limit deflection under the external load specified to pipe diameter (inches) squared/4000.
   2. When welded joints or flanged joints are shown on the Drawings to restrain the pipe under hydraulic thrust, the cylinder and the attachment of joint ring or

flange to the cylinder shall be designed for this stress or test pressure, whichever is greater.

E. Pipe Closures:
   1. Pipe layout submitted by the manufacturer shall reflect CONTRACTOR'S planned schedule for operations and the schedule of construction.
   2. Pipe closures shall be designed by the manufacturer for the pressure required and shall be located in straight runs of pipe.
   3. The number, design and location of all closure pieces shall be subject to the approval of the ENGINEER.
   4. CONTRACTOR's option: to either cut the closure pipe section to the required length in the field, or if timing permits, to have the pipe manufacturer supply the required length based upon exact field measurements.
   5. No extra payment will be made for closures, including the cost of concrete required for protection of the pipe.
   6. Construct field-fabricated closures after the pipe is laid. Concrete workmanship shall conform to applicable parts of Section 03300, Cast-in-Place Concrete.
   7. Form the interior with a sheet metal form.
   8. Care shall be taken in constructing the sheet metal form to provide good flow characteristics.
   9. After pouring of concrete, the form shall be removed and the interior surface grouted smooth.

F. Wall Fittings:
   1. Connection to structures shall be made by casting a fabricated bell wall fitting into the concrete, as shown on the Drawings.
   2. Fabricated bell wall fitting shall consist of a bell ring suitable for connection to the spigot, and waterstop ring, with a laying length equal to the width of the wall in which it is installed, plus any necessary additional length to accommodate the pipe connection.
   3. Fitting shall have a welded fabric or wire mesh reinforced mortar lining furnished to the interior diameter of the connecting pipeline.
   4. Connect flanged piping to special fabricated flange wall fittings, where shown on the Drawings.
   5. Fabricated flange wall fitting shall consist of a steel flange, steel pipe section, waterstop ring, and a bell ring suitable for connection to the spigot to be furnished, with a laying length equal to the width of the wall, in which it is installed plus the necessary additional length to accommodate the pipe connection.
   6. Fitting shall have a welded fabric or wire-mesh reinforced mortar lining finished to the interior diameter of the connecting pipe.
   7. Flanges shall be stress relieved after welding to the steel pipe section and then machined.

8. Flanges shall be drilled and tapped to receive Type 316 stainless steel stud bolts. Flanges shall conform to AWWA Standard C 207 for steel flanges, Class D, with ANSI B 16.1, Class 125 drilling.
9. The maximum lay length of the first section of pipe out of the wall fitting shall be per the Drawings.

2.3 MARKING FOR IDENTIFICATION

A. All pipeline materials shall be stamped, marked, or identified with the following information:
   1. Name or trademark of the manufacturer.
   2. Pipe class and specification designation.
   3. Size and length dimensions.
   4. Date and place of manufacture.
   5. Pipe 24-inches and larger shall also be marked on its interior as above.

PART 3 - EXECUTION

3.1 INSTALLATION

A. For buried piping installation, refer to Section 15051, Buried Piping Installation.

B. All exposed metal surfaces that are not lined and coated at the factory shall be treated with one coat of factory-applied lead-free primer.
   1. A diaper shall be used and filled with concrete sand slurry for these areas to encase and protect the pipe.
      a. This requirement shall apply to flanges, joint rings and bells, field closures, and any other portions of pipe or fittings, which are not otherwise protected from corrosion.

++ END OF SECTION ++

SECTION 15120

PIPING SPECIALTIES AND ACCESSORIES

PART 1 - GENERAL

1.1 SUMMARY

A. Scope:
   1. CONTRACTOR shall provide all labor, materials, equipment, and incidentals as shown, specified, and required to furnish and install all piping specialties and accessories. Included, but not limited to, are flexible couplings, mechanical couplings, flanged and harnessed adapters, and expansion joints.

1.2 RELATED SECTIONS

A. Section 09900, Painting.

B. Section 11295, Hydraulic Valves.

C. Division 15, Mechanical.

1.3 REFERENCES

A. Manufacturer's Qualifications:
   1. Manufacturer shall have a minimum of five years of experience in the production of substantially similar types of piping specialties specified and shall show evidence of satisfactory service in at least five installations.
   2. Each type of piping specialty and accessory shall be the product of one manufacturer.

1.4 SUBMITTALS

A. Shop Drawings: Submit for approval the following:
   1. Detailed drawings and data on each type of coupling, adaptor, expansion joint, and sight glass to be furnished. Submit and coordinate these with Shop Drawings required for piping systems.
   2. A copy of this specification section, with addendum updates included, and all referenced and applicable sections, with addendum updates included, with each paragraph check-marked to indicate specification compliance or marked to indicate requested deviations from specification requirements. Check marks (✓) shall denote full compliance with a paragraph as a whole. If deviations from the specifications are indicated, and therefore requested by the CONTRACTOR, each deviation shall be underlined and denoted by a number in the margin to the right of the identified paragraph, referenced to a

detailed written explanation of the reasons for requesting the deviation. The ENGINEER shall be the final authority for determining acceptability of requested deviations. The CONTRACTOR shall furnish equipment and/or services as specified if an exception and/or deviation is rejected. The remaining portions of the paragraph not underlined will signify compliance on the part of the CONTRACTOR with the specifications. Failure to include a copy of the marked-up specification sections, along with justification(s) for any requested deviations to the specification requirements, with the submittal shall be sufficient cause for rejection of the entire submittal with no further consideration.

3. The CONTRACTOR shall submit the preventive maintenance information package as part of the shop drawing submittal package to the ENGINEER for review and approval. **SHOP DRAWING SUBMITTAL PACKAGE WILL NOT BE APPROVED WITHOUT ACCEPTANCE OF PREVENTIVE MAINTENANCE INFORMATION.**

1.5 PRODUCT DELIVERY, STORAGE, AND HANDLING

A. Refer to Section 15051, Buried Piping Installation, and Section 15052, Exposed Piping Installation.

PART 2 - PRODUCTS

2.1 MATERIALS

A. Couplings: Unless otherwise specified, piping 2-inches in diameter and larger passing from concrete to earth shall be provided with two pipe couplings or flexible joints as specified within 2 feet or one pipe diameter of the structure, whichever is greater.
   1. Sleeve Type, Flexible Couplings:
      a. Pressure and Service: Same as connected piping.
      b. Material: Carbon steel for carbon steel and exposed ductile iron piping systems, or stainless steel for stainless steel and buried or submerged ductile iron piping systems.
      c. Gasket: Suitable for wastewater service or high temperature air service.
      d. Bolts and Nuts: Alloy steel, corrosion-resistant, prime coated. Buried couplings shall have Type 316 stainless steel bolts and nuts.
      e. Harnessing:
         1) Harness couplings to restrain pressure piping. Test pressures for pressure pipe lines are included in the Piping Schedules in Section 15051, Buried Piping Installation, and Section 15052, Exposed Piping Installation.
         2) Adjacent flanges shall be tied with bolts of corrosion resistant alloy steel. Provide flange mounted stretcher bolt plates as shown and to be designed by manufacturer, unless otherwise approved.

3) Conform to dimensions, size, spacing, and materials for lugs, bolts, washers, and nuts as recommended by manufacturer and approved by ENGINEER for the pipe size, wall thickness, and test pressure required. However, the following minimum bolting shall be provided, unless otherwise approved by the ENGINEER.

Pipe Diameter (inches)	Number of Bolts	Bolt Diameter (inches)	At (degrees)
4	2	5/8	180
6-8	2	3/4	180
10-12	2	7/8	180 or 250
14-20	4	1	190
24-48	4	1	90

f. Remove pipe stop, unless otherwise shown or specified.
g. Product and Manufacturer: Provide one of the following:
   1) Style 38, as manufactured by Dresser Industries.
   2) Type 411, as manufactured by Rockwell International.
   3) Or equal.

2. Flanged Adapters:
   a. Description: One end of adapter shall be flanged and the other end shall have a sleeve type flexible coupling.
   b. Pressure and Service: Same as connected piping.
   c. Material: Cast iron or steel.
   d. Gasket: Suitable for wastewater service and can withstand the specified temperature. EPDM gaskets for 250° F air service.
   e. Bolts and Nuts: Type 316 stainless steel.
   f. Harnessing:
      1) Harness adapters to restrain pressure piping. Test pressures for pressure pipe lines are included in the piping schedules in Section 15051, Buried Piping Installation, and Section 15052, Exposed Piping Installation.
      2) For adapters 12-inch diameter and less, provide 1/2-inch minimum stainless steel anchor studs installed in a pressure tight anchor boss. Provide number of studs required to restrain test pressure and service conditions. Harness shall be as designed and recommended by manufacturer; however, the following minimum anchor studs shall be provided, unless otherwise approved by ENGINEER.
         a) 6-inch diameter and less: Two.
         b) 8-inch diameter and less: Four.
         c) 10-inch diameter and less: Six.
         d) 12-inch diameter and less: Eight.
      3) For adapters larger than 12-inch diameter, provide split-ring harness clamps with a minimum of four Type 316 stainless steel bolts. Harness assembly shall be as designed and recommended by

manufacturer. Dimensions, sizes, spacings, and materials shall be suitable for service and conditions encountered and shall be approved by ENGINEER.

4) Harness couplings to restrain pressure piping.
5) Test pressures for pressure pipe lines are included in the piping schedules in Section 15051, Buried Piping Installation, and Section 15052, Exposed Piping Installation.
6) Harnessing shall conform to the details shown on the Drawings.

g. Product and Manufacturer: Provide one of the following (Manufacturers listed in alphabetical order):
1) Type 913, as manufactured by Rockwell International.
2) Style RFCA, as manufactured by Romac Industries, Inc.
3) Or equal.

B. Rubber Type Expansion Joints:
1. General:
a. Use rubber type expansion joints at all expansion joint locations, as noted on the Drawings.
2. Construction:
a. Tube and Cover: EPDM w/Kevlar.
1) Fabric Reinforcement: High quality cotton or synthetic fabric impregnated with rubber or other synthetic compounds to permit flexibility.
2) Metal Reinforcement: Wire or solid steel rings embedded in and bonded to the body rubber.
b. Retaining Rings:
1) Stainless Steel (Type 316)
2) Drilled to match flanged drilling.
c. Flanges: Rigid Steel Mating Flange.
d. Temperature:
1) Expansion couplings for ambient service shall be suitable for service temperature up to 350° F at 25 psi pressure.
3. Restraints:
a. General:
1) Provide control units on all expansion joints to permit movement and prevent excessive compression or elongation.
2) Furnish and install control units complete with all tie bolts, drilled plates, spacers, rubber and steel washers, stretcher bolt plates, retaining rings, stretcher bolts, sleeves, and appurtenances, as required.
3) Design and install all control units to limit expansion and compression to within the manufacturer's standard limits.
4) Design the stretcher bolts and sleeves to withstand the maximum thrusts developed within the piping system.
5) Anchor, guide, and install all expansion joints according to the manufacturer's recommendations.

6) Harness all rubber expansion joints by tying between adjacent flanges.

b. Materials:
   1) Stretcher Bolts and Nuts:
      a) Material: Type 304 stainless steel.
      a) Number:
         i. Twice the number of stretcher bolts as recommended by manufacturer.
         ii. Minimum four required for each rubber expansion joint.
   c. Washers: Rubber or neoprene.

4. Product and Manufacturer: Provide one of the following (Manufacturers listed in alphabetical order):
   a. Standard spool type, single arch by Mercer Rubber Company.
   b. Standard spool type, single arch by U.S. Rubber.
   c. Or equal.

C. Stainless Steel Expansion Joints:
1. Stainless steel expansion joints are required on all exterior yard air piping, process aeration piping, as well as interior blower facility air piping, as indicated on the drawings and specified.
2. All expansion joints shall be provided for a minimum axial movement of 2.50-inches for expansion and 1-inch for contraction per 100 feet length between any two fixed supports.
3. Expansion joint elements shall be hydraulically formed of single ply austenitic stainless steel and shall be selected by the manufacturer to withstand the specified pressure and temperature conditions and to absorb thermal expansion of the piping. Joints shall be free flexing type with internal sleeves and shall be of Type 316L stainless steel construction on air piping headers located upstream of 20-inch butterfly valves for the four aeration basins as indicated in mechanical drawings. Design burst strength shall be equal to minimum four times the working pressure of 7.6 psig for process air piping. Test hydrostatic pressures shall be equal to 10.5 psig for expansion joints in process air piping.
4. Expansion joints in yard air piping shall have an internal guide with a thickness equal to the piping system thickness.
5. Harness joints as shown, against thrust for the test pressure in the pipe line. Test pressures for air pipe lines are included in the piping schedules in Section 15052, Exposed Piping Installation. Harnessing shall be by two or more limit rods connected between flanges set for maximum allowable elongation of the joint. Limit rods and connection accessories shall be of Type 316 stainless steel for Type 316L stainless steel expansion joints. Limit rods shall be provided in accordance with the recommendations of the expansion joint manufacturer.
6. Product and Manufacturer: Provide one of the following (Manufacturers listed in alphabetical order):
   a. Hyspan.

b. Pathway Bellows, Incorporated.
c. Victaulic Depend-O-Lok, Inc., Omni-Flex.
d. Or equal.

D. Special Restrainers for PVC Pipe:
1. All transitions from PVC pipe to DIP shall be provided with a restraining device. The device must not impart point loads or distort PVC pipe. Device shall be a two-piece uni-flange design with machined serrations on the inside diameter of the flange. Device must be rated for all rated pressures of PVC pipe class and range in sizes of 2-inch diameter to 36-inch diameter for PVC pipe. Restrained device shall be Uni-Flange Block Buster 1300, as manufactured by Ford Meter Box.

E. Dielectric Connections:
1. Where dissimilar pipe materials connect, an insulating section of rubber or plastic pipe shall be provided. The insulating section shall have a minimum length of 12 pipe diameters. Dielectric unions may be used instead of the specified insulating sections.
2. Product and Manufacturer: Provide one of the following (Manufacturers listed in alphabetical order):
a. Capitol Manufacturing.
b. EPCO.
c. Or equal.

F. DIP to PVC Adapters:
1. All transitions from CPVC/PVC pipe to DIP pipe shall be provided with a restraining device. The device must not impart point loads or distort CPVC/PVC pipe. Device shall be two-piece uni-flange design with machine serrations on the inside diameter of the flange. Device must be rated for all rated pressures of CPVC/PVC pipe class and range in sizes of 2-inch diameter to 36-inch diameter for CPVC/PVC pipe. Restrained device shall be Uni-Flange Block Buster 1300 as manufactured by Ford Meter Box.

2.2 PAINTING

A. Clean and prime coat ferrous metal surfaces of equipment in the shop in accordance with the requirements of Section 09900, Painting.

B. Coat machined, polished and non-ferrous surfaces and similar unpainted surfaces with corrosion prevention compound which shall be maintained during storage and until equipment begins operation.

C. Field painting shall conform to the requirements of Section 09900, Painting.

PART 3 - EXECUTION

3.1 INSTALLATION

A. Install piping specialties and accessories in accordance with manufacturer's instructions.

B. Make adjustments to expansion joints as required to ensure that they will be fully extended when the ambient temperature is at minimum operating temperature and fully compressed at maximum operating temperature for the system in which they are installed.

++ END OF SECTION ++

SECTION 15140

SUPPORTS AND ANCHORS

PART 1 - GENERAL

1.1 SUMMARY

A. All supports and anchors on the site shall adhere to these specifications.

1.2 SECTION INCLUDES

A. Pipe and equipment hangers and supports.

B. Equipment bases and supports.

C. Sleeves and seals.

D. Flashing and sealing equipment and pipe stacks.

1.3 SUBMITTALS

A. Descriptive submittals shall be made in accordance with the Data Reference symbols defined in Section 01300, Submittals.
   1. Shop Drawings: Indicate system layout with location and detail of trapeze hangers.
   2. Product Data: Provide manufacturers' catalog data for pipe hangers, pipe supports, and roof curbs, including load capacity.
   3. Design Data: Indicate load carrying capacity of trapeze, multiple pipe, and riser support hangers.
   4. Manufacturer's Installation Instructions: Indicate special procedures and assembly of components.

B. Shop Drawings: Submit for approval the following:
   1. A copy of this specification section, with addendum updates included, and all referenced and applicable sections, with addendum updates included, with each paragraph check-marked to indicate specification compliance or marked to indicate requested deviations from specification requirements. Check marks (✓) shall denote full compliance with a paragraph as a whole. If deviations from the specifications are indicated, and therefore requested by the CONTRACTOR, each deviation shall be underlined and denoted by a number in the margin to the right of the identified paragraph, referenced to a detailed written explanation of the reasons for requesting the deviation. The ENGINEER shall be the final authority for determining acceptability of requested deviations. The CONTRACTOR shall furnish equipment and/or services as specified if an

exception and/or deviation is rejected. The remaining portions of the paragraph not underlined will signify compliance on the part of the CONTRACTOR with the specifications. Failure to include a copy of the marked-up specification sections, along with justification(s) for any requested deviations to the specification requirements, with the submittal shall be sufficient cause for rejection of the entire submittal with no further consideration.

2. The CONTRACTOR shall submit the preventive maintenance information package as part of the shop drawing submittal package to the ENGINEER for review and approval. **SHOP DRAWING SUBMITTAL PACKAGE WILL NOT BE APPROVED WITHOUT ACCEPTANCE OF PREVENTIVE MAINTENANCE INFORMATION.**

1.4 QUALITY ASSURANCE

A. Base selection and location of pipe hangers on MSS SP69, Pipe Hangers and Supports - Selection and Application.

1.5 REGULATORY REQUIREMENTS

A. Conform to specified code for support of plumbing piping.

PART 2 - PRODUCTS

2.1 PIPE HANGERS AND SUPPORTS

A. Plumbing Piping - Potable Water/DWV/Non-Potable Water/Storm Drain/Drain:
   1. Conform to 2012 International Plumbing Code.
   2. Hangers for Pipe Sizes 1/2-inch to 3-inches: Malleable iron or carbon steel; Type 6 adjustable swivel, split ring, or Type 10 adjustable swivel band type.
   3. Hangers for Pipe Sizes 4-inches and Over: Type 1 carbon steel, adjustable, clevis.
   4. Multiple or Trapeze Hangers: Steel channels with spacers and hanger rods, double nuts, or Type 41 cast iron roll, double nuts.
   5. Wall Support for Pipe Sizes to 2-inches: Type 12 split extension or cast iron hook.
   6. Wall Support for Pipe Sizes 3-inches and Over: Type 33 welded steel bracket and oversized U-bolt.
   7. Vertical Support: Type 8 steel riser clamp.
   8. Floor Support for Pipe Sizes to 3-inches and all DWV Pipe Sizes: Type 37 cast iron adjustable pipe saddle, lock nut, nipple, floor flange, and concrete pier or steel support, or Type 46 adjustable cast iron roll and stand, steel bolts, and concrete pier or steel support.
   9. Floor Support for Pipe Sizes 4-inches and Over: Type 46 adjustable cast iron roll and stand, steel bolts, and concrete pier or steel support.

10. Protection Saddles for Piping 2-1/2-inches and Larger: Hard block non-conducting saddles in 90 degree segments, 12-inch minimum length, block thickness same as insulation thickness.
11. Copper Pipe Support: Copper plated or vinyl coated.

2.2 ACCESSORIES

A. Hanger Rods in dry areas: Galvanized threaded both ends, threaded one end, or continuous threaded.

B. Hanger Rods in wet areas: Stainless Steel threaded both ends, threaded one end, or continuous threaded.

2.3 HANGER INSERTS

A. Inserts: Stainless Steel or galvanized steel shell and expander plug for threaded connection with lateral adjustment, top slot for reinforcing rods, lugs for attaching to forms; size inserts to suit threaded hanger rods.

2.4 FLASHING

A. Metal Flashing: 0.032-inch thick aluminum; 26 gauge galvanized steel.

B. Metal Counterflashing: 0.05-inch thick aluminum; 22 gauge galvanized steel.

C. Flexible Flashing: 47 mil thick sheet EPDM or butyl; compatible with roofing.

D. Caps: Steel, 22 gauge minimum; 16 gauge at fire resistant elements.

E. Flashing shall be compatible with specified roofing material.

2.5 SLEEVES

A. Sleeves for Pipes Through Non-fire Rated Floors: 18 gauge galvanized steel or 0.08-inch thick aluminum.

B. Sleeves for Pipes Through Non-fire Rated Beams, Walls, Footings, and Potentially Wet Floors: Steel pipe or 18 gauge galvanized steel or 0.08-inch thick aluminum.

C. Sleeves for Pipes Through Fire Rated and Fire Resistive Floors and Walls, and Fire Proofing: Pre-fabricated fire rated sleeves, including seals UL listed.

D. Sleeves for Round Duct Work: 0.08-inch thick aluminum.

E. Sleeves for Rectangular Duct Work: 0.08-inch thick aluminum.

F. Stuffing Insulation: Glass fiber type, non-combustible.

G. Sealant: Acrylic; refer to Division 7, Thermal and Moisture Protection.

PART 3 - EXECUTION

3.1 INSTALLATION

A. Install in accordance with manufacturer's instructions.

3.2 INSERTS

A. Provide inserts for placement in concrete formwork.

B. Provide inserts for suspending hangers from reinforced concrete slabs and sides of reinforced concrete beams.

C. Provide hooked rod to concrete reinforcement section for inserts carrying pipe over 4-inches.

D. Where concrete slabs form finished ceiling, locate inserts flush with slab surface.

E. Where inserts are omitted, drill through concrete slab from below and provide through-bolt with recessed square steel plate and nut flush with top of slab.

3.3 PIPE HANGERS AND SUPPORTS

A. Support piping in accordance with the code or standard that the piping system is installed under.

B. Install hangers to provide minimum 1/2-inch space between finished covering and adjacent work.

C. Place hangers within 12-inches of each horizontal elbow.

D. Use hangers with 1-1/2-inch minimum vertical adjustment.

E. Support horizontal cast iron pipe adjacent to each hub, with 5 feet maximum spacing between hangers.

F. Support vertical piping at every floor. Support vertical cast iron pipe at each floor at hub.

G. Where several pipes can be installed in parallel and at same elevation, provide multiple or trapeze hangers.

H. Support riser piping independently of connected horizontal piping.

I. Provide copper plated or vinyl coated hangers and supports for copper piping.

J. Design hangers for pipe movement without disengagement of supported pipe.

K. Prime coat exposed steel hangers and supports. Refer to Division 9, Finishes. Hangers and supports located in crawl spaces, pipe shafts, and suspended ceiling spaces are not considered exposed.

3.4 EQUIPMENT BASES AND SUPPORTS

A. Provide equipment pads of concrete, minimum 4-inches thick and extending 6-inches beyond supported equipment. Refer to Division 3, Concrete.

B. Provide templates, anchor bolts, and accessories for mounting and anchoring equipment.

C. Construct supports of aluminum structural members. Brace and fasten with flanges bolted to structure.

D. Provide rigid anchors for pipes after vibration isolation components are installed.

3.5 FLASHING

A. Provide flexible flashing and metal counterflashing where piping and duct work penetrate weather or waterproofed walls, floors, and roofs.

B. Flash vent and soil pipes projecting 3-inches minimum above finished roof surface with pre-fabricated EPDM sealing system with aluminum base and stainless steel clamps.

C. Seal floor drains watertight to adjacent materials.

3.6 SLEEVES

A. Set sleeves in position in formwork. Provide reinforcing around sleeves.

B. Size sleeves large enough to allow for movement due to expansion and contraction. Provide for continuous insulation wrapping.

C. Extend sleeves through floors 1-inch above finished floor level. Caulk sleeves.

D. Where piping or duct work penetrates floor, ceiling, or wall, close off space between pipe or duct and adjacent work with stuffing insulation and caulk air tight. Provide close fitting metal collar or escutcheon covers at both sides of penetration.

E. Install chrome plated steel escutcheons at finished surfaces.

F. Provide alkali resistant coating on aluminum sleeves before installing in contact with mortar, concrete, or other masonry.

++ END OF SECTION ++

SECTION 15260

PIPING INSULATION

PART 1 - GENERAL

1.1 WORK INCLUDED

A. All work specified in this section shall comply with the provisions of these specifications.

B. Work required under this section consists of insulation for piping and duct systems and equipment specified in Division 15.

C. Provide all necessary labor, materials, tools, and equipment to perform work required on the drawings and specified herein.

D. Certain equipment and/or systems to be factory insulated by the manufacturer. Factory insulation materials to be as specified in applicable sections of the specifications.

E. All pipe, fittings, and valves to be insulated.

F. Thermal resistance "R" values used herein are expressed in units of hour/degrees F/sq. ft./Btu per inch of thickness on a flat surface at a mean temperature of 75ºF, unless specifically noted.

1.2 DEFINITIONS

A. "Exposed" equipment, ducts and piping are areas which will be visible without removing ceilings or opening access panels. "Concealed" is not "Exposed."

B. Outdoors is considered exposed to the weather.

C. Underground is buried, whereas in a trench below grade is considered concealed.

1.3 APPLICABLE CODES AND STANDARDS

A. ASTM E-84.

B. NFPA 225.

C. UL 723.

D. NFPA 90A.

1.4 SUBMITTALS

A. Submit seven copies of all insulating materials data for review by the Architect.

PART 2 - PRODUCTS

2.1 ACCEPTABLE MANUFACTURERS

A. CertainTeed, Armstrong, Owens-Corning, Manville.

2.2 CERTIFICATION/QUALITY ASSURANCE

A. Only products of manufacturers meeting this specification will be approved.

B. Products shall meet applicable national, model, state and local building codes and be UL (or other recognized testing lab) listed for intended service.

C. All insulation materials shall be delivered and stored in manufacturer's containers and kept free from dirt, water, chemical, and mechanical damage.

D. All insulation, adhesives, coatings, sealers, tapes, shall have a flame spread rating of 25 or less and smoke development of 50 or less when tested in accordance with ASTM E-84, NFPA 225, UL 723, and further must meet the requirements of NFPA 90-A where applicable and model and local buildings, plumbing, and mechanical codes.

E. Insulation for duct, pipe, and equipment for above grade exposed to weather outside building shall be certified as being self-extinguishing for 2" thickness in less than 53 seconds when tested in accordance with ASTM D1692.

2.3 MATERIAL FOR PIPE

A. Materials for Pipe and Equipment: Provide factory premolded or shop or site metered segment type insulation for pipe, pipe fittings, and valves. Fitting insulation to be of same thickness and material as adjoining pipe insulation.
   1. Flexible Tubular Elastomeric:
      a. Provide fire-retardant closed-cell slip-on flexible type similar to Armstrong Armaflex. Product to have continuous operational temperature limit of not less than 220ºF and a minimum "R" value of 2.57.
      b. Use flexible tubular elastomeric for the following services:
         1) Moisture condensate drains - ½" thick.
         2) Remote drinking fountain cold water piping from cooler to fountain ½" thick.
         3) Exposed waste piping serving handicap lavatories.

c. Seal all joints with vapor barrier mastic similar to Childers CP-30.

2. Glass Fiber:
   a. Provide factory-formed, fiberglass pipe insulated factory-jacketed system type similar to Manville Micro-Lok ASJ heavy density, one-piece, dual temperature, and premolded insulation with temperature limit of 850°F.
   b. Insulate all valves, fittings and flanges with 3-pound density fiberglass insulation to a thickness equal to the adjacent piping insulation and covered with premolded 25/50 rated PVC fitting, vapor sealed with Childers CP-30 vapor barrier mastic.
   c. Jacket to be fiberglass reinforced white kraft paper bonded to aluminum foil.
   d. Use glass fiber insulation for the following services:
      1) Domestic hot water piping; 1" thick.
   e. The insulation shall be applied over clean, dry pipe with all joints butted firmly together.
   f. All piping exposed to exterior shall be insulated with Manville Metal-Lok, CSG, Gustin-Bacon, Brower, Armstrong or approved.
      1) The insulation shall be jacketed with a minimum thickness of 0.016" aluminum. The insulation and aluminum shall be secured in place by a continuous friction type joint to provide a positive weatherproof seal along the entire length of the aluminum jacket.
      2) Then an aluminum preformed strap containing a permanently plastic weatherproof sealant shall be centered over each circumferential joint and secured by tightening of a clip or by use of separate ½" wide stainless steel banding (.015" minimum thickness).
      3) Fittings: All elbows, tubes, turns, sweeps and bends shall be insulated with metered sections of insulation and covered with preformed aluminum fitting cover. Joints shall be sealed with a sealing compound and preformed aluminum bands such as Manville Miter-Seals.
   g. Insulated piping exposed in mechanical equipment rooms shall be coated using arabol and canvas or white PVC plastic jacket installed in accordance with manufacturer's instructions.

PART 3 - PART 3 - EXECUTION

3.1 GENERAL

A. Insulation shall be applied in a workmanlike manner by experienced, qualified workmen.

B. Insulation shall not be applied until all pressure testing has been completed, inspected and released for insulation applications. (This does not apply to ductwork with acoustical liner.)

C. No pipe insulation shall be cut where a hanger is located. If hangers have been installed which violates this strict requirement notify the Architect immediately.

D. All surfaces shall be clean and dry when covering is applied. Covering to be dry when installed and before and during application of any finish, unless such finish requires specifically a wetted surface for application.

E. All adhesives, cements, and mastics shall be compatible with materials applied and shall not attack materials in either wet or dry state.

F. Install insulation using professional insulators who have adequate experience and ability.

G. Exposed-to-view insulation shall have a well-tailored appearance.

3.2 INSTALLATION OF INSULATION

A. Piping Insulation:
   1. Insulation end joints to be tightly butted together and the longitudinal seam stapled closed with outward clinch staples, 3" on center. Before stapling, heavily coat the underside of the jacket overlap with vapor barrier adhesive, Childers CP-30 or equal. Locate all longitudinal seams out of sight.
      Cover end joints with factory furnished, 4" wide vapor barrier striping tapes, heavily coating the underside and secure with vapor barrier adhesive. Seal all ends of pipe insulation with vapor barrier mastic at valves, fittings, flanges, direct hanger contacts and every butt joint of straight run.
   2. In addition to ASJ jacket, cover all piping, valves, fittings, etc., in all exposed areas and all catwalk areas and where exposed to view with white PVC plastic jacket installed in accordance with manufacturer's instructions or 8-ounce canvas sized with Foster's 30-36 or equal Arabol lagging adhesive and left suitable for painting. Final installation shall be vaportight.
   3. Valves, Fittings and Flanges: Insulate all valves, fittings and flanges with 3-pound density, flexible fiberglass insulation to a thickness equal to the adjacent piping insulation and covered with premolded 25/50 rated PVC fittings, vapor sealed with Childers CP-30 vapor barrier mastic.
   4. Hangers and Rollers: At hangers and rollers where the pipe is supported by the insulation, the Insulation Contractor shall install an insert section of wood cellular glass or calcium silicate on all piping 3" diameter and larger inside the vapor barrier. The length of insert section shall not be less than 12" for all piping through 8" and 18" on pipe size 10" and over. Coat the insert section with vapor barrier mastic to provide an effective vapor seal.

Provide a protective shield covering of 18 gauge for piping 6" and smaller and 16 gauge for 8" and larger, galvanized steel placed centrally between the insert section of all hangers and rollers. Shield shall cover half of the insulation and have a length of not less than 12" on pipe sizes up to 8" and 18" on pipe sizes 10" and over.

++ END OF SECTION ++

SECTION 15290 –

DUCTWORK INSULATION

PART 1 - GENERAL

1.1 Work Included

A. All work specified in this section shall comply with the provisions of the specifications.

B. Work required under this section consists of insulation for piping and duct systems and equipment specified in Division 15.

C. Provide all necessary labor, materials, tools, and equipment to perform work required on the drawings and specified herein.

D. Certain equipment and/or systems to be factory insulated by the manufacturer. Factory insulation materials to be as specified in applicable sections of the specifications.

E. All pipe, fittings, and valves, to be insulated.

F. Thermal resistance "R" values used herein are expressed in units of hour/degrees F/sq. ft./Btu per inch of thickness on a flat surface at a mean temperature of 75ºF, unless specifically noted.

1.2 Definitions

A. "Exposed" equipment, ducts and piping are areas which will be visible without removing ceilings or opening access panels. "Concealed" is not "Exposed."

B. Outdoors is considered exposed to the weather.

C. Underground is buried, whereas in a trench below grade is considered concealed.

1.3 Applicable Codes and Standards

A. ASTM E-84.

B. NFPA 225.

C. UL 723.

D. NFPA 90A.

1.4 Submittals

A. Submit seven copies of all insulating materials data for review by the Architect.

PART 2 - PRODUCTS

2.1 Acceptable Manufacturers

A. CertainTeed, Armstrong, Owens-Corning, Manville.

2.2 Certification/Quality Assurance

A. Only products of manufacturers meeting this specification will be approved.

B. Products shall meet applicable national, model, state and local building codes and be UL (or other recognized testing lab) listed for intended service.

C. All insulation materials shall be delivered and stored in manufacturer's containers and kept free from dirt, water, chemical, and mechanical damage.

D. All insulation, adhesives, coatings, sealers, tapes, shall have a flame spread rating of 25 or less and smoke development of 50 or less when tested in accordance with ASTM E-84, NFPA 225, UL 723, and further must meet the requirements of NFPA 90-A where applicable and model and local buildings, plumbing, and mechanical codes.

E. Insulation for duct, pipe, and equipment for above grade exposed to weather outside building shall be certified as being self-extinguishing for 2" thickness in less than 53 seconds when tested in accordance with ASTM D1692.

2.3 Materials for Ductwork

A. Blanket Type Insulation:
   1. Provide minimum 3/4 pound per cubic foot density, 1-1/2" thick, flexible, factory-reinforced foil-faced, vapor barrier glass fiber blanket insulation, having a minimum "R" value of 5.0.
   2. Use blanket type duct insulation for the following: All unlined round ductwork.

B. Acoustic Duct Insulation:
   1. Provide minimum 1-1/2 pound per cubic foot density duct liner coated to a smooth finish with a NFPA 90A approved vinyl or neoprene coating suitable for velocities up to 4,000 fpm to meet the erosion test method described in UL Publication No. 181. Sound absorption of 1" thickness shall not be less than 0.43 at 250 cps. Minimum K of 0.28 at 75ºF mean temperature.
   2. Use acoustical type duct insulation for the following services:

a. All rectangular ducts - 1" thick, unless indicated as wrapped on the drawings.
b. Outside air intake plenums, ducts and mixed air plenums -1" thick.

PART 3 - EXECUTION

3.1 General

A. Insulation shall be applied in a workmanlike manner by experienced, qualified workmen.

B. Insulation shall not be applied until all pressure testing has been completed, inspected, and released for insulation applications. (This does not apply to ductwork with acoustical liner.)

C. No pipe insulation shall be cut where a hanger is located. If hangers have been installed which violates this strict requirement notify the Architect immediately.

D. D. All surfaces shall be clean and dry when covering is applied. Covering to be dry when installed and before and during application of any finish unless such finish requires specifically a wetted surface for application.

E. All adhesives, cements, and mastics shall be compatible with materials applied and shall not attack materials in either wet or dry state.

F. Install insulation using professional insulators who have adequate experience and ability.

G. Exposed-to-view insulation shall have a well-tailored appearance.

3.2 Installation of Insulation

A. Acoustical Duct Insulation:
1. Line all air ducts and plenums with insulation as previously described. Dimensions shown are the clear inside dimensions of the duct; sheet metal shall be increased to accommodate the liner.
2. Acoustical Duct Insulation: Apply insulation to the tops, bottoms and sides of all ducts and plenums. Use mechanical clips and adhesive to fasten all insulation. Metal clips shall be Duro-Dyne or Grip Nail mechanical fasteners or spot-welded pins, not over 12" O.C. Adhesive shall be Minnesota Mining and Manufacturing Corp. NF #38 or Miracle #101 adhesive applied with 100% coverage on interior for duct liner.

   Cut all insulation squarely and evenly to provide a smooth insulation surface to all seams and joints and point up to form a smooth surface with cement.

Butt ends of insulation exposed to airflow in supply ducts shall be covered and tapered to duct wall with 4-ounce canvas saturated with Foster's 30-36 or Arabol lagging adhesive.

B. Provide metal nosing on leading edge of all duct liner sections for 20' from fan connections per figure 2-22 of 1995 SMACNA HVAC Duct Construction Standards.

C. Thermal Duct Insulation for Ducts not Indicated as Lined:
   1. Insulate (wrap) all round and rectangular ducts not indicated as lined with insulation as previously described.
   2. Insulation shall be applied over surfaces which have been wiped clean and dry. Insulation shall have 2”-tab overlap on both longitudinal and transverse seams. Butt edges of all insulation firmly together. Coat the underside of the exposed circumferential and longitudinal seams with 3M #37 or NF #38, Miracle #101 or undiluted Foster's adhesive and firmly press on surface of vapor barrier again, making sure all seams are tightly butted. Staple all joints with outward clinch staples on 6" centers, 1" back from the edge. Seal all staples with a vapor barrier FSK tape cemented to the insulation with Childers CP-30 vapor barrier mastic.
   3. Staple all joints with outward clinch staples on 6" centers, 1" back from the edge. Seal all staples with a vapor barrier FSK tape cemented to the insulation with Childers CP-30 vapor barrier mastic.

++ END OF SECTION ++

SECTION 15400

PLUMBING FIXTURES AND EQUIPMENT

PART 1 - GENERAL

1.1 SUMMARY

A. Section includes: Materials and installation of plumbing system.

B. Related sections:
   1. The Contract Documents are complementary; what is called for by one is as binding as if called for by all.
   2. It is the CONTRACTOR's responsibility for scheduling and coordinating the Work of subcontractors, suppliers, and other individuals or entities performing or furnishing any of CONTRACTOR's Work.
   3. The following Sections are related to the Work described in this Section. This list of Related Sections is provided for convenience only and is not intended to excuse or otherwise diminish the duty of the CONTRACTOR to see that the completed Work complies accurately with the Contract Documents.

1.2 REFERENCES

A. American Society of Mechanical Engineers (ASME).

B. ASTM International (ASTM).

C. National Electrical Manufacturers Association (NEMA):
   1. 250- Enclosures for Electrical Equipment (1000 V Maximum).

D. Plumbing and Drainage Institute (PDI):
   1. PDI-WH 201 - Water Hammer Arresters Standard.

1.3 DEFINITIONS

A. NEMA Type 3 enclosure in accordance with NEMA 250.

1.4 SYSTEM DESCRIPTION

A. System requirements:
   1. Include in plumbing system fixtures; soil, drain, vent, and water piping; connections; cleanouts, fittings, accessories, and testing for complete and functional system.
   2. Except in details, piping is indicated on the Drawings in diagrammatic form. Sizes and locations are indicated on the Drawings; however, not every offset and fitting, nor every structural difficulty that will be encountered in the Work has been indicated.

3. As part of the Work, modify piping alignment indicated on the Drawings as necessary to avoid structural or mechanical obstructions and to clear the work of other trades.
4. Furnish such parts and pieces necessary to provide a complete and operational system.

1.5 SUBMITTALS

A. Manufacturer's published recommendations for sizing and locating the unit.

B. Design and construction details of the unit.

C. Shop Drawings: Submit for approval the following:
1. A copy of this specification section, with addendum updates included, and all referenced and applicable sections, with addendum updates included, with each paragraph check-marked to indicate specification compliance or marked to indicate requested deviations from specification requirements. Check marks (✓) shall denote full compliance with a paragraph as a whole. If deviations from the specifications are indicated, and therefore requested by the CONTRACTOR, each deviation shall be underlined and denoted by a number in the margin to the right of the identified paragraph, referenced to a detailed written explanation of the reasons for requesting the deviation. The ENGINEER shall be the final authority for determining acceptability of requested deviations. The CONTRACTOR shall furnish equipment and/or services as specified if an exception and/or deviation is rejected. The remaining portions of the paragraph not underlined will signify compliance on the part of the CONTRACTOR with the specifications. Failure to include a copy of the marked-up specification sections, along with justification(s) for any requested deviations to the specification requirements, with the submittal shall be sufficient cause for rejection of the entire submittal with no further consideration.
2. The CONTRACTOR shall submit the preventive maintenance information package as part of the shop drawing submittal package to the ENGINEER for review and approval. **SHOP DRAWING SUBMITTAL PACKAGE WILL NOT BE APPROVED WITHOUT ACCEPTANCE OF PREVENTIVE MAINTENANCE INFORMATION.**

1.6 QUALITY ASSURANCE

A. Regulatory requirements: Perform work under this Section in accordance with the plumbing code, and in accordance with applicable laws and regulations, including requirements for accessibility, energy, water conservation, and health including related requirements for water fountains and coolers.
1. Where provisions specified in these Specifications or the design indicated on the Drawings are in conflict with the plumbing code or laws or regulations, the Code and the laws or regulations take precedence over the specified provisions and design.

1.7 WARRANTY

A. Provide manufacturer's warranties for electric water heaters, booster electric water heaters, gas water heaters, water softeners, and duplex automatic water filters.

PART 2 - PRODUCTS

2.1 MATERIALS

A. General:
   1. Manufactured units: Fixture fittings and piping which are exposed shall be heavy-duty chrome.
   2. Accessories:
      a. Stops:
         1) Fixtures, except showers, shall have stops at the fixtures' service.
         2) Stops for laboratory equipment, and for other equipment or fixtures for which stops have not been otherwise specified in this Section, shall be chrome-plated straight pattern compression stops or chrome-plated angle pattern compression stops.
      b. Supply faucets, traps, and waste piping for laboratory equipment with the equipment unless otherwise specified.

B. Drain, waste, and vent piping:
   1. Piping:
      a. Piping for drain, waste and vent: As specified in Section 15052.
   2. Joints:
      a. Threaded joints: American standard taper screw threads, clean cut, and made up with graphite and oil or other suitable pipe compounds.
      b. Slip joints permitted only in trap seals or on the inlet side of the traps.
         1) Do not use long screws or bushings.
      c. Other types of joints: As specified in the piping sections.
   3. Fittings:
      a. Fittings for screwed waste and vent piping: Cast iron drainage pattern fittings.
      b. Additional provisions for fittings specified within piping section.
   4. Flashing:
      a. Roof vent, roof drain, and pipe flashing: Minimum 4-pound lead sheet.

C. Plumbing piping accessories:
   1. Cleanouts:
      a. Wall-mounted cleanouts (WCO) for concealed piping: Provide complete including cast-iron tapped tee, round smooth stainless steel access cover, and securing screw.
         1) Manufacturers: One of the following or equal:
            a) Josam Company, 58910-19 (Tee & Plug) and 58600 (Access Cover).

b) Zurn Industries, Z1446-BP

b. Floor cleanouts (FCO) in finished floor areas: Provide complete including cast-iron ferrule, countersunk plug, gastight and watertight seal, adjustable cleanout head extension, scoriated nickel-bronze top, and securing screw.
   1) Manufacturers: One of the following or equal:
      a) Josam Company, 56070.
      b) Zurn Industries, Inc., ZN-1400.

c. Floor cleanouts (FCO) in unfinished floor areas: Same as floor cleanouts specified for finished floor areas, except heavy-duty scoriated bronze top suitable for heavy traffic conditions.
   1) Manufacturers: One of the following or equal:
      a) Josam Company, 55000.
      b) Zurn Industries, Inc., Z-1400-HD.

d. Yard cleanouts (YCO) in asphalt or ground areas: Floor cleanouts in unfinished floor areas specified before, for encasement in a concrete pad as indicated on the Drawings and flush with grade.

2. Traps:
   a. Furnish traps with the fixtures.
      1) Do not provide double trapped fixtures.
   b. Traps installed on bell-and-spigot pipe: Cast iron.
   c. Traps installed on threaded pipe: Recessed drainage pattern or as specified with the fixture.
3. Floor drainage:
   a. Floor drainage piping: Cast iron soil pipe and fittings.
   b. Equipment and floor drains.
      1) Provide with adjustable strainer head, floor level grate, 4-inch diameter funnel extension and provided with no-hub outlet and nickel bronze top.
      2) Manufacturers: One of the following or equal:
         a) Floor drain:
            (1) Josam Company, 30000-A, combination drip drain, less clamping collar.
            (2) Zurn Industries, Inc., ZN-415 strainer.
         b) Funnel extension:
            (1) Josam Company, E-2.
            (2) Zurn Industries, Inc., ZN-328.
         c) Other floor drains with no-hub outlet and nickel bronze Type B strainer:
            (1) Josam Company, 30000-A universal floor drain with adjustable strainer, less clamping collar.
            (2) Zurn Industries, Inc., ZN-415.
      3) Strainer sizing:
         a) 3-inch drain strainers: 6-inch diameter
         b) 4-inch drain strainers: 8-inch diameter.
   c. Heavy-duty floor drains with sedimentation bucket:

1) Heavy-duty floor drains: 12 inches square with coated cast-iron body, grate, and slotted sediment bucket.
    a) Manufacturers: One of the following or equal:
        (1) Josam Company, 37810.
        (2) Zurn Industries, Inc., Z-610.

d. Floor sinks for indirect wastes:
    1) Floor sinks for indirect wastes:
        a) Full, half, or quarter grate, 12 inches square by 6 inches deep, acid resisting enamel interior and exterior, no-hub outlet, pipe size as indicated on the Drawings.
        b) Manufacturers: One of the following or equal:
            (1) Josam Company, 49320A.
            (2) Zurn Industries, Inc., Z-1900.

e. Trench drains:
    1) Modular, 6 inches wide, 12 inches long extensions, bottom outlet, with secondary dome strainer, length as indicated on the Drawings.
    2) Manufacturers: One of the following or equal:
        a) Josam Company, 76000.
        b) Zurn Industries, Inc., Z-664.

f. Overflow roof drains: Provide same as main roof drains but with a 2-inch water dam.
    1) Manufacturers: One of the following or equal:
        a) Josam Company, 26010-23.
        b) Zurn Industries, Inc., ZRB-100-89.

g. Scupper roof drains: Provide complete, including coated cast-iron body, coated cast-iron or bronze angle strainer, 90-degree or 45-degree threaded outlet where required, and pipe of size indicated on the Drawings.
    1) Manufacturers: One of the following or equal:
        a) Josam Company, 24700.
        b) Zurn Industries, Inc., Z-187.

h. Downspout nozzles: Provide complete, including nickel-bronze body and wall flange.
    1) Pipe size: As indicated on the Drawings.
    2) Manufacturers: One of the following or equal:
        a) Josam Company, 25010-50-SF.
        b) Zurn Industries, Inc., ZANB-199.

PART 3 - EXECUTION

3.1 PREPARATION

A. Rough-in fixtures and accessories in accordance with the dimensions supplied by the manufacturers of the fixtures.

3.2 INSTALLATION

A. General:
   1. Mount fixtures and accessories without cutting of finish surface.
   2. Make cross connections between piping for domestic water supply and piping for contaminated sources only by means of appropriate connection devices that prevent backflow from the contaminated sources to the domestic water supply.
      a. Provide connection devices approved by the Public Health authorities having jurisdiction over the Work.
   3. Conceal plumbing piping unless otherwise indicated on the Drawings or specified in the specifications.
   4. Furnish and install vents required in drainage piping as part of the plumbing system, in accordance with Laws and Regulations.
   5. Insulate hot water piping.

B. Drain, waste, and vent piping:
   1. Where not specified otherwise, install horizontal piping with a grade of 1/4 inch per foot.
   2. Provide vents, roof drains, and pipes flashed and made watertight at the roof with lead sheet flashings.
   3. Extend flashing not less than 6 inches up the pipes, and counterflash with standard cast iron or malleable iron recessed roof couplings.
   4. Extend flashing for vents up to the top of the vent and turn down into the pipe.
   5. Extend flashing shields not less than 8 inches from vent and pipe in all directions.

C. Plumbing piping accessories:
   1. Provide cleanouts of the same size as the size of the waste and drain piping on which cleanouts are installed, up to 4 inches in diameter. Provide cleanouts 4 inches in diameter on waste and drain piping larger than 4 inches diameter.
   2. Provide traps at all fixture and equipment connections to the sanitary drainage system. Install traps as near to the fixtures as possible.
   3. Sizes of equipment drains and of floor drains shall be as indicated on the Drawings.
   4. When indicated on the Drawings, cut holes in heavy-duty floor drain grate for a drainpipe from equipment or other source.

D. Water softeners:
   1. Install water-softening equipment in accordance with manufacturer's instructions. Provide piping for drain and overflow connections to the equipment drains.

3.3 FIELD QUALITY CONTROL

A. Testing:
   1. Test soil, waste, drain, and vent lines as specified and in accordance with plumbing code.
   2. Test water piping with water under a pressure of 100 pounds per square inch.
   3. Repair and correct defective work disclosed by testing. Repeat testing until defective work is corrected.

3.4 CLEANING

A. Flush piping and leave clean, as required by public health authorities having jurisdiction over the Work.

++ END OF SECTION ++

SECTION 15410

PLUMBING PIPING

PART 1 - GENERAL

1.1 WORK INCLUDED

A. All work specified in this section shall comply with the provisions of Division 15.

B. Provide and install all piping for mechanical systems complete with all necessary pipe, tube, hangers, supports, restraints, isolators, fittings, hardware and pipe cleaning/testing as necessary for fully functional piping systems.

1.2 SUBMITTALS

A. Submit seven copies of all piping and fittings for review by the Architect.

B. Submit seven copies of all welders' qualification and test records for review by the Architect.

PART 2 - PRODUCTS

2.1 STEEL PIPE

A. Acceptable Manufacturers for Steel Pipe and Fittings: Bethlehem, Le Barge Pipe Bending & Coiling, Ohio Pipe, Grinnell, U.S. Steel, Tube Turn, Victaulic, Fee & Mason, Gustin-Bacon, Allied, Daniel, Ladish, Naylor, Anvil, Cajon, American Tube Co, Gruvlok.

B. Butt welded, electric resistance welded, or seamless black steel pipe, ANSI 836.10, ASTM A120, Grade B or A, or ASTM A53, A106, or A134 Schedule 40, for piping 10" and smaller; 0.375" wall thickness for piping 12" through 24" diameter, for:
   1. Fire sprinkler system piping.
   2. Compressed air piping.

2.2 STRAINERS

A. Acceptable Manufacturers: Armstrong, Sarco, Bush, Illinois, Strong, TACO, Meuller.

2.3 FLEXIBLE PIPE CONNECTORS

A. Acceptable Manufacturers: Mason, Mercer, Metraflex, Proco.

2.4 PRESSURE GAUGES

A. Acceptable Manufacturers: Marsh, Trerice, Weksler, Palmer, Weiss, Miljoco.

2.5 THERMOMETERS

A. Acceptable Manufacturers: Taylor, Weksler, Trerice, Palmer, Johnson, Honeywell, Weiss, Powers, Miljoco.

2.6 AIR VENTS

A. Water line drains and vents required for operation (whether shown or not) shall be provided and installed by this Contractor, per manufacturer's recommendations. Vent all high points, drain all low points, also vent, and drain all trapped sections of the piping system as necessary. Vent and drain lines shall be piped to an accessible location and provided with an appropriate drain plug.

B. Acceptable Manufacturers: Armstrong, Sarco, Amtrol, Taco.

2.7 STEEL PIPE FITTINGS

A. Flanges, Fittings, Unions and Similar Items: Commercially available products marked in accordance with MSS-SP-25 marking on small size of odd, shaped products may be omitted provided they are listed in the sequence so allowed by MSS-SP-25, but such products shall bear the manufacturer's name and trademark. Piping used for chilled water supply/return, heating water supply/return, fuel gas, compressed air.

B. Fittings 2-1/2" and Larger: Carbon steel, butt welded fittings, ASTM A234-QBP, ANSI B16.9, and B16.28. Slip-on flanges are not permitted.

C. Branch Connections from Mains or Headers 2-1/2" or Larger: Welded tees or welding outlets, Bonney Forge Weld-O-Lets or Thread-O-Lets, or equal. Use forged outlets only if branch line is at least one pipe size smaller than main or header. Forged outlets are not allowed for use on fuel gas piping.

D. Fittings 2" and Smaller: Threaded, standard cast iron.

E. Galvanized Steel Pipe Fittings: Same as above, except galvanized coated. Provide drainage pattern type fittings for waste, vent, and drain piping.

F. Flanges: Carbon steel, ASTM A105 and ANSI B16.5 raised face weld neck or slip on raised face.

G. Unions: Cast iron with bronze to iron ground joint rated at 150 lbs., 300 PSI on fuel gas piping.

H. Bolting Materials: Same finished carbon steel bolts and hex nuts, ASTM A307, 55T. Threads and dimensions, ANSI B1.1 and B18.2

I. Thread Lubricant: Crane "Formula 425", or equal. (NOTE: Approved Teflon tape may be used except on natural gas piping.)

J. Gaskets: 1/8" thick Cranite, Sepco, or equal.

K. Mechanical Joints: Gruvlok by Anvil or Victaulic, cut or rolled groove, or equal mechanical joints may be used on steel piping for chilled and heating water piping, condenser water piping, watersource heat pump piping, fire sprinkler system piping.

L. Mechanical Joints (copper): Cut or rolled groove or equal mechanical joints made of copper, or designed specifically for copper systems, may be used for domestic water system piping.

M. Strainers: Strainers shall be wye self-cleaning flush type, gray cast iron, with bronze Monel metal or stainless-steel sediment strainer and 3/4" gate blow-off valve, piped to floor sink or drain. Strainers shall be separate from other components. Integral strainers and traps will not be approved. Strainers 3" and smaller shall have 1/32" perforations and strainers 4" and larger shall have 1/8" perforations and have a minimum open area of 3 times the area of strainer inlet pipe. Use 40 mesh screens and Everdur wool packing during initial cleaning of system.

N. Pressure Gauges:
   1. Furnish and install Marsh "Master," Trerice 500X, Weksler "Regal" pressure gauges or approved equal where indicated. The gauges shall have 4-1/2" dial size. The case shall be plain or screwed ring depending on whether the gauge is to be mounted on a panel or to be pipe supported. Cases shall be cast aluminum. The scale range shall be 0 to 150 psi for all water, Monel rotary type, nylon gear movement.
   2. When gauges are apt to be subjected to a vacuum, provide compound gauges reading 30" to 150 psi.
   3. Provide a needle valve at each gauge connection. Valves shall be Trerice 735-2, Whitey B-1VF4 or approved.
   4. Gages subjected to pulsations shall be equipped with snubbers.

O. Pipeline Temperature Indication:
   1. Thermometers: All pipeline thermometers shall be Trerice Series BX-9, or A405 or approved equal, one-piece case industrial thermometer with glass front, baked black enamel case, brass with 3-4F2 or 138-0015.2 separable socket, red reading thermometer tube, swivel nut on stem (allows installing without rotating thermometer).
      a. All thermometers are to have 9" scale and 1ºF scale division. Submit temperature ranges for approval.

b. All thermometer wells are to be extension stem type to clear insulation.
c. Three-quarter inch Thread-O-Lets shall be welded to pipe, or pipe size to 3/4" threaded tee furnished for mounting of well. Direct welding of wells in pipelines will not be permitted.
d. Pipeline Temperature and Pressure Indicators: Furnish and install Peterson Co. "Pete's Plugs" or Sisco pressure-temperature plugs as shown on drawings (yellow dot for heating systems). Provide the Owner with two sets of pressure/temperature probes for his use.

2. Air Vents: Install automatic air vents were indicated and at all high points of each system. Vents as manufactured by Armstrong 1 AV, Sarco 13, or approved equal, size 3/4" with 1/2" IPS drain piping to the nearest waste line or floor sink. Install manual air vents on all cooling and heating coils and elsewhere as indicated. Provide a gate valve and union ahead of all automatic air vents.

P. Insulating flanges, couplings, or unions shall be provided wherever copper and ferrous metal piping are connected, wherever cathodically protected steel lines enter buildings, wherever submerged metallic piping is connected to unsubmerged piping, new to existing galvanized piping, and wherever indicated on the drawings.

2.8 COPPER TUBING

A. Acceptable Manufacturers for Copper Tubing and Fittings: Anderson Metals Corp., Brasscraft, Mueller Brass, Elkhart, Milwaukee, Nibco, Anaconda, Victaulic.

B. Type L, hard drawn, seamless, and conforming to ASTM B88, for domestic hot and cold water and compressed air piping.

C. Type K, rolled, soft drawn seamless, conforming to ASTM B88, for use under slabs and underground where lengths of pipe run between fittings exceed maximum hard drawn pipe section lengths. Solder joints below grade or slabs are not permitted.

D. Type M, hard drawn seamless, conforming to ASTM B42 for condensate drain piping.

2.9 COPPER TUBING FITTINGS

A. Sweat type, wrought copper, ASTM B16.22, with dimensions conforming to ANSI B16.22 and sweep patterns for copper tubing.

B. Brazing type wrought copper conforming to MSS SP.73 for copper tubing.

C. Type DWV fittings, cast copper alloy solder joint drainage fittings conforming to ASME B16.23.

D. Dielectric Connections: Epco Sales, Inc., or "V-Line" (as manufactured by Lochinvar Company) dielectric couplers. Use couplers at junction of steel pipe and equipment with copper piping systems. Do not use steel or cast-iron fittings in copper piping system. Brass fittings may be used for dielectric locations.

E. Unions: Brass ground joint, 250 lb. working pressure.

F. Nipples: Brass.Mechanical couplings, Victaulic or equal, all copper, designed for grooved copper pipe system.

2.10 CAST IRON SOIL AND VENT PIPE

A. Acceptable Manufacturers: AB&I, Tyler.

B. Below Grade: All waste, vents, sewer, and storm lines shall be of cast iron soil pipe and fittings and shall conform to the requirements of CISPI Standard 301, ASTM A888 or ASTM A74 for all pipe and fittings. Pipe and fittings shall be marked with the collective trademark of the Cast Iron Soil Pipe Institute and Manufactured by AB & I Foundry, Charlotte Pipe & Foundry Company or Tyler Pipe, or shall receive prior approval of the Engineer.

C. Above Grade: All waste, vents, sewer, and storm lines shall be of cast iron soil pipe and fittings and shall conform to the requirements of CISPI Standard 301, ASTM A888 or ASTM A74 for all pipe and fittings. Pipe and fittings shall be marked with the collective trademark of the Cast Iron Soil Pipe Institute or receive prior approval of the Engineer.

D. Joints in Cast Iron Pipe:
   1. Acceptable Manufacturers: Husky, Clamp-All, MG, Standard Stainless-Steel no-hub couplings, Tyler.
   2. Below grade: Joints for hub and spigot pipe and fittings shall be installed with compression gaskets conforming to the requirements of ASTM Standard C-564 or shall be installed with lead and oakum.
   3. Above grade: Joints for hubless pipe and fittings shall conform to the manufacturer’s installation instructions, CISPI Standard 310 and local code requirements. Hubless coupling gaskets shall conform to ASTM Standard C-564.

E. Latest issue of each standard listed above shall apply.

2.11 POLYVINYL CHLORIDE (PVC) PIPING

A. Acceptable Manufacturers for Plastic Piping and Fittings: Cabot, Enfiled, Nibco, Ryan Herco, GSR.

B. PVC Pipe: Schedule 80 PVC, Type 1 normal impact, commercial standard CS-207 and ASTM D-1784 for cooling Tower Basin Water Treatment Piping.

C. Fittings: PVC Schedule 80, ASTM D-2467, socket weld type using Cabot CPS cement.

D. No plastic pipe shall be used outdoors or were exposed to sunlight.

E. No cellular core pipe will be allowed.

2.12 ACRYLONITRILE - BUTADIENE - STYRENE (ABS) PIPING:

A. Acceptable Manufacturers for Plastic Piping and Fittings: Cabot, Enfield, Nibco, Ryan Herco, GSR.

B. ABS Pipe: Schedule 80 ABS, conforming to current ASTM D3965 Specifications for waste, vent, and rainwater piping.

C. Fittings: ABS Schedule 80 to match piping, socket weld type using Enfield Duraplus Gray ABS solvent cement.

D. No cellular core pipe will be allowed.

2.13 CHLORINATED POLYVINYL CHLORIDE (CPVC) PIPING

A. Acceptable Manufacturers for Plastic Piping and Fittings: Cabot, Nibco, Ryan Herco, GSR.

B. CPVC Pipe: Schedule 80 CPVC, Type 1 normal impact, ASTM F-441 for cooling tower basin water treatment piping.

C. Fittings: CPVC Schedule 80, ASTM F-439, socket weld type using Cabot CPS cement.

2.14 MISCELLANEOUS PIPE ACCESSORIES

A. Sleeves: Schedule 10 or 40 steel pipe or 26-gauge galvanized sheet metal, except use 18-gauge galvanized sheet metal for floor penetrations in mechanical rooms. (See Section 15103 for sleeve requirements.)

B. Escutcheons: Chrome pipe escutcheons, slip-on, or split type where pipe passing through finished walls may be visible. Escutcheons are not required in mechanical rooms and janitor closets.

C. Exposed Metal Pipe and Trim in Administrative and Public Areas: Chrome plated.

D. Pipe saddles to be 18-gauge sheet metal or galvanized installed to protect insulation as required by appropriate section of this chapter.

2.15 FIREPROOF PENETRATION SEALANTS

A. Acceptable manufacturers: Fyre Putty, 3M Fire Barrier, Flame Seal Fire Barrier.

B. U.L. Listed rated material classified for use in through-penetration Fire Stop System No's. 124, 125, 150, 151.

C. ASTM Listed flame spread/smoke development of 25/50 with ASTM E-84.

2.16 SDWA – SAFE DRINKING WATER ACT:

A. General
   1. All potable water components installed on this project shall meet or exceed the requirements of the SDWA in all respects. This requirement reduces the permissible levels of lead in the wetted surfaces of pipes, pipe fittings, plumbing fittings and fixtures to a weighted average of not more than 0.25%. The 0.20% lead limit for solders and flux first implemented in 1986 and stipulates a method for calculating the weighted average lead content is required as well on this project. Products that meet this standard are referred to in the SWDA law as "Lead Free."
   2. All products on this project shall be certified by an independent third-party laboratory and certifying that is listed to NSF 61 Standards.
   3. Piping, pipe fittings, plumbing fittings and fixtures that are installed on this project that are installed that do not meet or exceed the SDWA will be required to be removed at the Contractor’s expense and replaced with an approved SDWA product.

PART 3 - EXECUTION

3.1 INSTALLATION - GENERAL

A. Clean inside of pipe prior to installation. Keep installed piping clean and protect ends from foreign matter by capping or plugging them.

B. Install pipe so that it does not interfere with opening of doors or apparatus, access to equipment, or any portion of electrical equipment.

C. Run pipes in straight lines and square with building. Install vertical piping plumb. Make offsets only were indicated and where necessary.

D. Install pipes so that expansion and contraction will not cause undue stress or strain to pipes or equipment. Provide loops, offsets, and expansion joints as shown on drawings. If, in Contractor's opinion, inadequate loops or offsets are shown, contact Architect for instructions.

E. Provide flanges and unions throughout the pipe systems to make installation and removal of piping and equipment convenient. Make provisions for servicing and removal of equipment without dismantling piping.

F. Excavation and Backfill:
   1. 1. The Contractor shall do all excavations, filling, and backfilling necessary for the installation of his work including shoring, bailing, and pumping as required to maintain his trenches and keep them in dry condition until the piping required has been installed, tested, and approved. Remove all excess excavated materials and remove from the site. Do not cut any trenches near of under footings without first consulting with the Architect. Compact and tamp backfill to original grade and remove excess dirt as directed. No work shall be covered until properly tested and approved.
      All pavement, sidewalk, piping, and electrical conduit, caused to be cut or damaged by this section shall be restored to original condition by workmen qualified and active in the trades involved.
   2. Prepare all trenches for non-metal piping systems as directed by piping manufacturers. In no case shall trench preparation be less than a 4-inch-deep bed of pea gravel full width of trench. Surround pipe with 6" cover of pea gravel.
   3. Do all backfilling and final grading as directed in the Architectural Specifications and Drawings. Excavation and backfill shall be in accordance with all requirements of Division 2 of the Architectural Specifications.

G. Grading Pipes for Drainage:
   1. Uniformly place storm drainage pipes and footing drain pipes at elevations and slopes indicated. If no elevations or slopes are indicated, slope pipes at not less than 1/8" per foot for 4" and larger, 1/4" per foot for 3" pipe and smaller.
   2. Uniformly place sanitary sewer pipes at elevations and slopes indicated. If no elevations or slopes are indicated, contact Architect for instructions before proceeding.
   3. Provide air vents in each high section of piping. Provide drain valves in low section of piping. Vents and drains are required for chilled water, heating hot water, condenser water, and domestic water systems. Install pipes free of sags, traps, and unnecessary bends. Install drain valves in steam piping.
   4. Do not close, fur in, or cover piping before it has been tested and inspected as specified.
   5. Cover or plug openings in pipes, drains, fittings, and equipment during construction to keep system free of foreign matter.
   6. Conceal all piping unless otherwise indicated or specified.
   7. Install piping to maintain headroom, keep access openings clear and offset piping as required to maintain clearances.
   8. Do not spring, bend, or force pipe into place. Use fittings for all offsets and changes of alignment in piping.
   9. Do not use street elbows, bushings and longscrew nipples.

10. Do not install piping above electrical equipment or in or through a room dedicated to electrical equipment.
11. Where change in pipe size occurs, use appropriate reducing fittings, no bushings.

H. Mill wrap all uninsulated underground steel pipe with Republic X-TRU-COAT or equal.

3.2 PIPE JOINTING

A. Preparing Pipe Ends:
   1. 1. Cut pipe ends square with pipe cutters only. Do not use hacksaws or torch.
   2. Ream pipe ends, after cutting, to full inside diameter.
   3. Where pipe is to be threaded, die-cut right hand, clean cut full depth, ream to slight bevel taper threads. Make threaded joints so that they will be leak proof without caulking after jointing. Leave not more than 3 full threads exposed.
   4. Apply a thin coat of approved pipe lubricant to male threads only.

B. Soldered and Brazed Joints:
   1. Lines 1/2" - 2": Make copper pipe joints with water soluble flux conforming to ASTM B813 and 95/5 solder.
   2. Lines 2-1/2" or larger: Make type K copper pipe joints with water soluble flux conforming to ASTM B813 and high melting point silver solder or phos-copper solder.
   3. Use no lead solders for industrial water, domestic or potable water piping systems.

C. Cast Iron Pipe Joints: Install compression gaskets and no-hub couplings in accordance with manufacturer's instructions.

D. Bracing Joints:
   1. Provide braces and bridle rods as required to reinforce joints.
   2. Where large pipes underground is subject to shock because of sudden changes in liquid flow rate, provide concrete "kicker" blocks at joints, fittings, and changes of pipe direction.

E. Welding Joints:
   1. Weld all black steel piping 2-1/2" and larger.
   2. All procedures and welders must be qualified in accordance with the requirements of Section IX, ASME Boiler and Pressure Vessel Code and ANSI code for power piping B31.1. Procedure qualification test records and acceptance shall be submitted with the welding procedure prior to the start of fabrication.

The qualification test shall show proficiency in overhead, vertical, and horizontal welding techniques. The qualification test shall have occurred within six months prior to performing any welding on this project.

3. Architect's inspector or authorized representative will review performance qualification records of individual welders.
4. Welding Processes: The following welding processes are permitted, provided that the procedure is qualified in accordance with Section IX, ASME Boiler and Presser Vessel Code.
    a. Manual shielded metal-arc.
    b. Gas tungsten-arc.
    c. Other welding processes may be used providing they are qualified in accordance with Section IX, ASME Boiler and Pressure Vessel Code.
5. Restrictions: Weld bevel preparations shall be provided on all welding fittings and shall be machined or ground to remove all discoloration if flame or arc cut.
6. Welding Filler Material:
    a. A filler material control procedure shall be submitted to Owner for review and acceptance prior to performing any welding.
    b. All shielded metal-arc welding shall be performed using low-hydrogen type electrodes such as E7018.
7. Preheat and Interpass Temperature:
    a. Preheat for pressure components shall be as specified in Table 132 of ANSI B.1.
    b. Preheat and interpass temperature shall be determined by temperature indicating crayons, contact pyrometers or other equally suitable means.
    c. Postweld Heat Treatment: Postweld heat treatment for pressure components shall be as specified in Table 131 of ANSI B31.1.

3.3 PLASTIC PIPE: POLYVINYL CHLORIDE (PVC) CHLORINATED POLYVINYL CHLORIDE (CPVC), POLYPROPYLENE (PP), POLYETHYLENE (PE), ACRYLONITRITE BUTADIENE STYRENE (ABS)

A. Join PVC, CPVC, and ABS pipes and fittings per the manufacturer's written recommendations. Using recommended cleaners, solvents, and cements. Join PP piping per the manufacturer's recommendations using thermal resistance wire methods. Join PE piping per the manufacturer's written recommendations, using butt fusion welding methods.

3.4 PIPE SLEEVES & ESCUTCHEONS

A. Sleeve all pipes passing through masonry or concrete floors and walls. For above ground concrete floors or walls where the opening for the pipe penetration is core-drilled, sleeves may be omitted.

B. Provide piping passing through masonry, concrete, tile and gypsum wall construction with not lighter than 22-gauge galvanized steel sleeves with lock

seam, except as otherwise indicated. Sleeves for non-insulated piping passing through gypsum wall construction may be omitted.

C. Sleeves for insulated pipe must be large enough to clear insulation.

D. Where pipe motion due to expansion and contraction will occur, make sleeve of sufficient diameter to permit free movement of the pipes.

3.5 VALVE ACCESS

A. Locate shutoff and control valves for easy access and operation. Where valves are located in enclosed spaces, access doors and installation is under other divisions of these specifications (Division 8). Locate valve at the following locations: Pressure connection to equipment. Branch connections from vertical risers, domestic connections to utilities.

B. Concealment: Unless otherwise indicated, conceal all valves in the finished parts of the building.

C. Grouping: Wherever possible, group valves to provide a neat appearance with all parts accessible.

D. Valves on horizontal piping are to be placed in the upright position only.

3.6 CONTROL SYSTEMS CONNECTORS

A. Weld connectors at points indicated, and at other points where necessary for installation of thermometers and automatic controls.

3.7 RECHECKING AND REPAIRING

A. Before piping is concealed, recheck it for leaks.

B. Rework or replace defective and leaking joints, and joints which are otherwise unsatisfactory. Peening, caulking, and doping are not permitted.

3.8 CLEANING OF PIPE

A. Before piping is accepted by the Architect, clean and sterilize the piping systems as described in Section 15030. Present test results of sterilization to Architect prior to acceptance of system.

3.9 FIRE STOP MATERIAL

A. Install U.L. assembly at all locations where piping or conduit is stubbed through rated walls and or floors.

3.10 CATHODIC PROTECTION OF PIPING

A. All metallic fuel gas piping installed below grade shall be cathodically protected as per the written instructions of a corrosion engineer licensed in the State of Arizona. The corrosion Engineer shall be present during the cathodic protection installation and issue a written acceptance report for the Contractor to forward to the Architect.

3.11 UNIONS, FLANGES AND DIELECTRIC COUPLINGS

A. Unions required: On inlet and outlet of all automatic valves and equipment with connections 2" and smaller.

B. Dielectric Couplings: Provide dielectric couplings at all points where copper or brass pipe or equipment is joined to ferrous pipe and equipment. This requirement does not apply to brass valves in steel lines or joints between copper and cast-iron drainage lines.

++ END OF SECTION ++

SECTION 15430

PLUMBING SPECIALTIES

PART 1 - GENERAL

1.1 WORK INCLUDED

A. All work specified in this section shall comply with the provisions of Division 15.
   1. Provide and install all plumbing specialties as specified herein and as indicated on the drawings, complete with all necessary hardware, and supports necessary for a fully functional installation.

1.2 SUBMITTALS

A. Submit seven copies of all plumbing specialties for approval by Architect.

PART 2 - PRODUCTS

2.1 BACKFLOW PREVENTERS

A. Provide backflow preventers by Beeco, Febco, Cla-Val, Watts, Wilkens, or Conbraco.

B. Unit shall operate completely automatic and be fitted with tight-closing shutoff valves.

C. All parts must be replaceable and serviceable without removing unit from line.

D. Total pressure drop through complete backflow preventer shall not exceed listed psi loss at rated flow, as shown on drawings.

E. Backflow preventer assembly shall include wye strainer basket upstream of the backflow preventer with blow down valve.

F. Each device installed in doors or if specifically called for shall be equipped with a waste port air gap assembly that is to be piped full size to the nearest approved indirect waste receptor.

2.2 CLEANOUTS

A. Provide cleanouts manufactured by Josam, Zurn, Wade, J. R. Smith, Watts or equal, the following numbers listed are J. R. Smith.

B. Exterior: 4226 round cast iron cleanouts with scoriated frame, cover, and gasketed bronze plug located in sidewalk or with concrete pad.

C. Finish Concrete Floor: 4026 inside caulk round nikaloy scoriated frame and cover, and gasketed bronze plug.

D. Resilient Tile Floor: 4146 inside caulk round nikaloy scoriated frame and cover with tile recess, and gasketed bronze plug.

E. Wall: 4422 cast iron caulking ferrule with nikaloy smooth round frame and stainless-steel cover, taper threaded bronze plug.

F. Cleanouts occurring in waterproof floors shall be furnished with clamping devices.

G. Cleanout finished trim is to be taped during all construction phases.

2.3 SDWA – SAFE DRINKING WATER ACT:

A. General
   1. All potable water components installed on this project shall meet or exceed the requirements of the SDWA in all respects. This requirement reduces the permissible levels of lead in the wetted surfaces of pipes, pipe fittings, plumbing fittings and fixtures to a weighted average of not more than 0.25%. The 0.20% lead limit for solders and flux first implemented in 1986 and stipulates a method for calculating the weighted average lead content is required as well on this project. Products that meet this standard are referred to in the SWDA law as "Lead Free."
   2. All products on this project shall be certified by an independent third-party laboratory and certifying that is listed to NSF 61 Standards.
   3. Piping, pipe fittings, plumbing fittings and fixtures that are installed on this project that are installed that do not meet or exceed the SDWA will be required to be removed at the Contractor’s expense and replaced with an approved SDWA product.

PART 3 - PART 3 - EXECUTION

3.1 BACKFLOW PREVENTERS

A. Pipe relief through fixed air gap fitting and discharge indirect to sewer as indicated on drawings.

B. Install adjacent to wall and/or floor utilizing stand-off brackets, angle frame, and/or concrete piers. Comply with local codes regarding maximum service elevations.

C. Test unit for leaks and pressure drop. Clean and/or replace soiled strainer media.

D. Install in accordance with manufacturer's recommendations.

E. Provide initial test of the backflow device. Test is to be performed by a certified agent and a test certificate is to be forwarded to the Architect.

3.2 CLEANOUTS:

A. Locate line size cleanouts, except 4" largest required, at base of all soil and waste stacks, at all changes in direction and in straight runs.

B. Cleanouts shall be installed in an accessible location.

C. Provide two (2) way cleanouts where waste mains exit buildings ahead of sewer connections.

++ END OF SECTION ++

SECTION 15440

PLUMBING FIXTURES

PART 1 - GENERAL

1.1 Work Included

A. Complete plumbing system installation including testing and adjustment of domestic hot and cold water, waste and vent, gas systems and plumbing fixtures and trim as specified and indicated.

1.2 Related Work

A. All Work and Materials: In full accordance with latest rules and regulations of local and state authorities having jurisdiction, and with Uniform Plumbing Code. Fees required completing the work.

B. Provide, procure, and pay for all permits, licenses, and fees to local utility company for connections and services to the building. Pay for all reimbursements for work performed by local utility company when required.

C. The drawings indicate general arrangement and location of devices, apparatus, etc. Minor modification changes necessary to accommodate the work shall be made at no extra charge. The Contractor shall coordinate all final fixture locations with the Architectural drawings.

1.3 Submittals:

A. Submit seven (7) copies of manufacturer's literature, drawings, diagrams, and catalog cuts of fixtures, valves, faucets, fittings, shock absorbers, valve boxes, water heater, trap primers, clean-outs, and access doors to the Architect for review.

B. Submit seven (7) copies of shop drawings for all fabricated items showing construction, installation, and anchorage to the Architect for review.

C. Submit seven (7) copies of Water Analysis and Test copies from Arizona State Certified Laboratory.

PART 2 - PRODUCTS

2.1 Materials and Fabrications

A. Plumbing Fixtures

1. General
    a. Use polished chrome-plated, adjustable lead-free brass P-traps with wall escutcheons at all exposed locations. Use polished chrome-plated faucet with removable lead-free trim, brass body and brass handles.
    b. Fixtures and supply fitting shall be of one manufacturer. Provide diaphragm type, polished chrome-plated flush valves with integral vacuum breakers and screwdriver stops. Provide fixture stops or valves ahead of all equipment or fixtures. After fixtures are set in place and secured to walls, caulk all around between fixtures and wall with either Dow Corning #780 or G.E. Construction Sealant white silicone caulking compound.

2.2 SDWA – Safe Drinking Water Act:

A. General
    1. All potable water components installed on this project shall meet or exceed the requirements of the SDWA in all respects. This requirement reduces the permissible levels of lead in the wetted surfaces of pipes, pipe fittings, plumbing fittings and fixtures to a weighted average of not more than 0.25%. The 0.20% lead limit for solders and flux first implemented in 1986 and stipulates a method for calculating the weighted average lead content is required as well on this project. Products that meet this standard are referred to in the SWDA law as "Lead Free."
    2. All products on this project shall be certified by an independent third-party laboratory and certifying that is listed to NSF 61 Standards.
    3. Piping, pipe fittings, plumbing fittings and fixtures that are installed on this project that are installed that do not meet or exceed the SDWA will be required to be removed at the Contractor's expense and replaced with an approved SDWA product.

PART 3 - EXECUTION

3.1 General:

A. Inspection: Prior to work of this Section, carefully inspect work of all other trades to verify that such work is complete so that plumbing installation may properly commence.

B. Plumbing System Layout:
    1. General: Lay out plumbing system in careful coordination with drawings, determining proper elevations for all components of system and using a minimum number of bends to produce a satisfactorily functioning system.
    2. Enclosure of Pipes: Lay out all pipes to fall within partition, ceiling, or roof cavities and do not require furring except were shown exposed. All exposed

piping in workroom and toilet rooms shall be covered with PVC insulation jacketing and fitting covers.

C. Trenching and Backfilling: Trenching and backfilling in strict accordance with Soils Report.

3.2 Installation of Piping and Equipment:

A. General:
1. Cap or plug all open ends and make pipe level and plumb, free from traps, and space for other work.
2. All penetrations shall be trimmed with proper size chrome-plated escutcheon, no two-pipe escutcheons allowed.
3. Uniform pitch of at least 1/4" per foot for all horizontal waste and soil piping within building; or as indicated on the drawings; pitch all vents for proper drainage; install vent piping with each bend 45° minimum from horizontal.
4. Cushion all traps and bearings to minimize transfer of sound; firmly anchor all pipes in position; provide isolation of dissimilar metals.
5. 5. Inspect each piece of pipe, tubing, fittings, and equipment for defects and obstructions.
6. Pipes shall clear all beams and obstructions; do not cut into or reduce the size of load carrying members without approval of the Architect.
7. Install automatic trap primer valves and pipe to proper inlet fittings for all floor drain and floor sink traps.

B. Joints and Connections:
1. Ream all cut pipe; threads straight and true; apply Teflon tape to all male pipe threads; use graphite on all clean-out plugs.
2. Install Hub & Spigot cast iron pipe with neoprene gaskets per the manufacturer's written recommendations.
3. Install compression-type neoprene fittings per manufacturer's written recommendations and in conformance with the latest Edition of the U.P.C.
4. Make all joints in copper tube with lead free 95-5 tin antimony solder applied in strict accordance with manufacturer’s recommendations.

3.3 Sterilization of Pipes:

A. General:
1. After preliminary purging of system, chlorinate entire potable water system in accordance with current recommendations of American Water Works Association, pertinent codes, and regulations.
2. Chlorinate only when buildings are unoccupied.

B. Flushing:

1. Upon completion of sterilization, thoroughly flush entire potable water system.
2. When sterilization and flushing are complete, arrange with Arizona State Certified laboratory for all tests required by Local State Officials and AWWA Standard 601. As a minimum the water shall be analyzed for PH and chlorine residues. The water samples shall be analyzed for total and fecal coliform, cultured the day of receipt at the laboratory and read twenty-four (24) hours later.

3.4 Closing in Uninspected Work:

A. General: Do not cover up or enclose work until it has been properly and completely inspected and approved.

B. Noncompliance: Should any of the work be covered up or enclosed prior to all required inspections and approvals, uncover the work as required and, after it has been completely inspected and approved, make all repairs and replacements with such materials as are necessary to the approval of the Architect and at no additional cost to the Owner.

3.5 Testing:

A. Furnish all required personnel and equipment and make all tests required to receive approval of the Architect and all agencies having jurisdiction.

3.6 Cleaning Up:

A. Prior to acceptance of buildings, thoroughly clean all exposed portions of plumbing installation, removing all labels and all traces of foreign substance, using only a cleaning solution approved by manufacturer of plumbing item and being careful to avoid all damage to finished surfaces.

++ END OF SECTION ++

SECTION 15450

PLUMBING EQUIPMENT

PART 1 - GENERAL

1.1 Work Included

A. All work specified in this section must comply with the provisions of Section 15010.

B. Contractor shall provide and install a factory packaged electric storage type domestic water heater as specified herein and as shown on the drawings, complete with all accessories and connected to appropriate water systems, and electrical wiring of hot water recirculating pumps and aquastats serving these water heaters.

1.2 Submittals

A. Submit seven copies of water heater data for review by Architect.

PART 2 - PRODUCTS

2.1 Acceptable Manufacturers:

A. State, A. O. Smith, Lochinvar, Ruud, Rheem.

2.2 Equipment

A. Unit input, capacity, electrical characteristics, accessories scheduled on drawings.

B. Storage tank shall be steel, glass lined and ASME approved for 150 psi working pressure.

C. Insulated with 2" of polyurethane foam.

D. Safety controls shall include electric shutoff for overtemperature situation.

E. Seven-day time clock with minimum 14 on/off operations per week.

F. ASME temperature and pressure relief valve.

G. Operating and maintenance instructions.

H. Water heater shall be UL listed.

PART 3 - EXECUTION

3.1 Installation

A. Verify location and clearance requirements.

B. Installation in accordance with manufacturer's recommendations and project drawings.

C. Insulation for water connections as specified in Section 15250.

D. Make electric connections under Division 16.

E. Clean and test unit as required in Sections 15030 and 15035.

F. Provide dielectric unions at both hot and cold connections.

G. Provide union after the P/T valve to facilitate service or removal.

H. The Mechanical/Plumbing Contractor installing these water heaters shall procure the services of the Electrical Contractor on this project to install all required conduit and wiring to operate the hot water recirculating pumps and aquastats for these water heaters.

++ END OF SECTION ++

SECTION 15680

EVAPORATIVE COOLERS

PART 1 - PART 1 - GENERAL

1.1 Summary

A. Section Includes: Evaporative coolers as specified.

1.2 Submittals

A. Shop Drawings: Submit drawings showing dimensions, capacity controls and wiring diagram.

B. Product Data: Submit manufacturer's literature demonstrating compliance with Specifications.
   1. Evaporative coolers, Celdek type: United Metal Products, or approved equal.

C. Operation and Maintenance Manuals
   1. Submit complete installation, operation and maintenance manuals including test reports, maintenance data and schedules, description of operation and spare parts information.
   2. Furnish Operation and Maintenance Manuals in conformance with the requirements of Section 01300, Operation and Maintenance Data.

PART 2 - PRODUCTS

2.1 Manufacturers

A. The following manufacturers are approved for use subject to the detailed requirements of the Drawings and Specifications.

2.2 Fans

A. Type BI (Backward Incline Fan) DWDI Class I or Class II fans shall be equipped with (L10) 200,000-hour pillow block ball or roller bearings at maximum RPM of the cataloged class. Fan shaft shall be turned; ground and polished solid stainless steel rated at maximum RPM 75% below critical speed. Fan wheel and sheaves shall be keyed to the shaft. Fan wheel housings shall be fabricated of heavy gauge #304 stainless steel. Fan shall be IRD balanced at design RPM to a vibration velocity less than or equal to .080 inches per second measured at each bearing pad prior to shipment with belts and drive in place. Fans shall be AMCA 210 certified for performance and rated in accordance with AMCA 300 for sound. Submit

individual fan selection with performance and sound information. Fan sizes shall be minimum as listed in the schedule.

B. High-pressure lube lines shall be internally located at a common point on the drive side.

C. Fans, motors, and drives shall be internally spring isolated by the unit manufacturer on a fully welded structural channel or angle steel base complete with fan flex connections.

2.3 Direct Evaporative Cooling Section

A. Direct evaporative cooling section shall include evaporative media, stainless steel sump, pump, and housing (all parts in contact with water), and a schedule 80 PVC water distribution header. All stainless material shall be properly isolated with a 100% solid preformed synthetic polymer-based adhesive/sealant tape conforming with performance requirements of AAMA 807.3-92 to prevent dissimilar metal contact.

B. The media shall be CELdek media, 12-inch depth. Media shall be cross-fluted, self-cleaning design with a saturation efficiency of not less than 90% at 400 to 500 feet per minute face velocity. Operating face velocity at listed capacity shall not exceed 500 feet per minute. The installation of the media sections shall be verified for correct orientation.

C. The pump and distribution system shall be sized for 1.2 times the maximum design water flow rate and shall include cleanable drain connections. Pump shall be self-priming. All piping and distribution shall be schedule 80 PVC. Provide a maximum of 78" high media section. If a higher section is required, a secondary distribution system will be provided. Provide manual valve for distribution header. Provide a balancing valve. Drain and overflow connections shall be stainless steel couplings, continuously welded to the sump. Drain line shall be 1" and overflow to be 1-1/2" minimum. Fill lines shall be ½" minimum controlled by a heavy-duty bronze float valve.

D. Valve seat, disc and stem shall be corrosion-resistant and renewable. All connections shall be internally piped to the outside of the unit.

E. Wet section shall be provided with a flush line piped into the sump overflow. The bleed function shall be controlled with a normally closed solenoid valve and 24-hour adjustable 48-position timer. Timer shall be fully adjustable to increase or decrease the number of bleed events based on water conditions at the sites Submersible Sump Pump.

F. Furnish and install a submersible stainless-steel pump. The pump shall be designed so that the pump shaft horsepower (BHP) shall not exceed motor rated

horsepower throughout the entire operating range of the pump performance curve. Pump shall be built to operate whether fully or partially submerged Casing and Impeller.

G. Major parts of the pumping unit shall be manufactured of stainless steel. The casing, motor frame and fasteners shall be manufactured of 304 stainless steel. The impeller/diffuser material shall be thermo plastic-noryl GFN(2). The impeller shall be semi-open design. The pump(s) shall have a discharge size of 1-1/4" NPT Shaft Seal.

H. The pump shall be furnished with a non-mechanical double oil seal (rubber) Motor.

I. The pump motor shall be a minimum 1/3 H.P., 0.3 K.W., 115 Volt, 60Hz single phase. Motor shall be air filled with Class F insulation and shall be of split capacitor design. The motor shall be supplied with built-in thermal protection with automatic reset and shall be rated for continuous duty. Motor shaft shall be 303 stainless steel Motor Cable.

J. Pump motor cable shall be suitable for submersible pump applications. Cable shall have 10 feet UL/CSA approved "water resistant" #16 AWG cord.

2.4 Main Housing

A. Outdoor units up to 72" in width shall be furnished with a pitched (2" standing seam) roof. Outdoor units 73" and over in width shall be furnished with a pitched (3" standing seam) roof. Factory fabricated air handling units shall be constructed of prime quality G90 galvanized steel, formed outer panels secured to an integral, welded tubular structural steel frame such that exterior panels are non-load bearing. Exterior panels shall be removable without affecting the structural integrity of the unit. Side and roof panels fastened and caulked to each other. All units shall come complete with a welded 11-gauge structural tube steel base around the entire perimeter.

B. Outdoor ECUs shall have wall and roof panels constructed of minimum 18-gauge, G90 galvanized steel, suitable for use outdoors. Indoor units furnished with extra gasketing and/or caulking will not be acceptable for outdoor application.

C. Custom air handling units shall be factory assembled and shipped in one piece, except when trailer physical limitations prevent such shipment. When this occurs, units will be shipped in sections for field assembly by others. The manufacturer shall furnish all necessary gasketing and hardware for weatherproof reassembly in the field by others.

D. Unit roof curbs, where applicable, shall be furnished by the unit manufacturer unless specified otherwise. Curbs shall be fabricated of #14-gauge steel and shall

be unitized welded construction with an integral wood nailer. Can't strip and insulation by others.

E. Units shall be factory tested under UL standard 1995 and labeled with either UL, ETL or CSA.

2.5 Finish

A. Casing panels shall be coated with an epoxy-based primer and thermally cured to achieve a dry film thickness of 0.15 – 0.20 mils, to promote good adhesion to the galvanized substrate. The beige topcoat is applied at a thickness of approximately 1.60 mils and thermally cured to achieve a dry film thickness of 0.80-0.90 mils,

B. The paint system described above has been tested to meet the following stringent criteria for weatherproof and corrosion protection.

C. Certain unit internal components where required are electrostatically powder coated with epoxy-based paint and thermally cured at 375°F

D. Hand-sprayed and air-dried based painting systems are not acceptable.

2.6 Unit Base / Floor / Framework

A. Unit base frame shall be heavy duty 11-gauge galvanized rectangular steel tubing, fitted with C-Channel cross support members. The base shall include a Double Bottom 2-inch-thick insulated floor. Base rails shall be fitted with lifting lugs as required. The unit base floor shall be heavy-duty walk-on type fabricated from 16-gauge galvanized steel. The unit base shall be self-flashing when the unit is set on the roof curb to prevent water from penetrating the building interior.

B. Unit frame shall be constructed of 18-gauge 1 x 2 galvanized tubular steel, fully mig welded to form a unitized framework for support of all internal components.

2.7 Exterior Casing

A. Provide required structural frame and casing to withstand 6" minimum external static pressure. Panels shall be gasketed and secured to the tubular steel frame with ¼" hex head, zinc plated industrial fasteners. Exterior panels shall not affect the structural integrity of the unit. All exterior panels shall be constructed from 18-gauge G90 galvanized steel. Standing seam panelized construction without a welded tubular frame is not acceptable. To prevent deterioration of the galvanized steel and for ease of disassembly if needed, no welding shall be performed on the casing panels.

2.8 Access Doors

A. Man size access doors shall be provided on all sections which require access for maintenance or service. Unit shall be supplied with galvanized steel, 18-gauge double wall, hinged doors. Door frames shall be extruded aluminum. Formed steel frames are not acceptable. Access doors shall be flushed with the outside of the unit and shall have EPDM solid rubber seals and fitted composite handles that can be opened from the inside. Knurled knob-type latches are not acceptable and form-type flat, neoprene gaskets are not an acceptable seal. To ensure the safety of maintenance personnel, doors not openable from inside of the unit will not be acceptable. Access doors must be able to swing a full 180° open to allow complete and full access.

2.9 Motors

A. NEMA Design B T-FRAME MOTORS ARE MOUNTED ON AN ADJUSTABLE BASE. Motors shall be tested to IEEE standard 112 test method B and NEMA 12.58.2 and 12.59 table 12-10. Motors on VFDs shall have inverter duty, Inverter Spike Resistant™ (ISR) WIRE.

TYPE: Open Drip Proof (ODP)

VOLTS: 460/3 Phase

RPM: 1750

EFF: Premium

MAKE: Baldor

Motors shall be manufactured in the USA

Motor sizes shall be as indicated on the schedule.

2.10 Drives

A. VP "Variable Pitch" drives shall be furnished on motors up to 10 HP and fixed pitch on 15HP and above. V-belt drives shall be selected at 150% of motor nameplate horsepower. Drive manufacturer shall be Browning.

2.11 Filters

A. Factory fabricated filter sections shall be of the same construction and material as the unit.

B. Extended surface pleated type pre-Filters – These filters are 2" nominal thickness and shall have an average atmospheric dust spot efficiency range of 25-30% per ASHRAE standard 52.1 test methods. E filters shall be suitable for VAV systems with operating face velocity ranges to 500 FPM for 2" filters and 625 FPM for 4" filters. E35 filters are to be UL 900 Class 2 listed.

Media – High-loft, non-woven cotton/synthetic blend

Media Support – Diamond-shaped expanded metal

Pleat Design – Radial wedge type

Frame – Moisture-resistant chipboard with perforated steel support grilles.

Medi-Pack – Must be sealed to prevent air bypass and adaptable for use inside access housings.

2.12 Filter Gage

A. Filter bank shall be furnished with a Dwyer series 2000 mangnehelic gage. A sun shield fabricated of the same material and finish as the ECU shall be mounted to protect the face of the filter gauge from exposure to UV.

2.13 O/A Louvers

A. Louvers shall be formed galvanized of the drainable type and shall have a powder coated finish to match the air handling unit. Louvers shall be complete with a ¾" x .051 aluminum bird screen. Louvers shall be tested in accordance with AMCA Publication 511.

2.14 Electrical

A. Provide a single-point electrical connection at the unit with NEMA-3R enclosure. Panel shall have a through-the-door, fused main disconnect switch furnished with the unit.

B. Motors shall be factory wired to a VFD. The VFD shall be furnished with the unit and installed inside the unit.

C. Panel shall contain the required control power transformer(s), fuses, fuse clips, numbered terminal strips and NEMA-rated magnetic starters (except when provided with VFD) with overload protection in each phase for all three phase motors. "IEC" starters are acceptable when specified.

D. The high-to-low voltage transformer shall be provided to power control circuits. All primary and secondary transformer circuits shall be fused as required per NEC.

E. Single-phase motors, where scheduled shall have a NEMA-rated magnetic starter.

F. All wiring in the unit shall be run in metal conduit or liquid tight (3 foot maximum) with rain-tight fittings.

G. Smoke detectors when required shall be furnished, remote mounted and wired by others.

H. The above applicable items shall be completely installed and wired at the factory according to NEC code. Units shall bear a nationally recognized testing laboratory label and shall be factory tested in accordance with UL Standard 1995.

PART 3 - EXECUTION

3.1 Installation

A. Factory test entire unit after assembly for capacity and vibration prior to shipment.

B. The manufacturer shall provide within the unit, a detailed pre-shipping inspection checklist completed at the factory. Provided also will be a pre-start checklist and commissioning record which must be completed and faxed back to the manufacturer within 30 days of start-up to validate the factory warranty.

++ END OF SECTION ++

SECTION 15781

AIR CONDITIONING UNIT

PART 1 - GENERAL

1.1 Work Included

A. All work specified in this section shall comply with the provisions of Division 15.

B. Contractor shall provide and install the combination heating-cooling rooftop package heat pump units with capacities as shown on the drawings complete with all necessary hardware items for a fully functional system.

1.2 Submittals

A. Submit seven (7) copies of material/product data to Contracting Officer for approval in accordance with Section 15010.

B. Operation and Maintenance Manuals
   1. Submit complete installation, operation and maintenance manuals including test reports, maintenance data and schedules, description of operation and spare parts information.
   2. Furnish Operation and Maintenance Manuals in conformance with the requirements of Section 01300, Operation and Maintenance Data.

PART 2 - PART 2 - PRODUCTS

2.1 Acceptable Manufacturers

A. Trane, Carrier, York, Daikin, or approved equal.

2.2 Air Conditioning Unit (Cooling Only)

A. Each unit shall be complete with compressor, coils, blowers, and all necessary refrigerant piping, insulation, controls, etc., connecting same.

B. The air conditioning unit shall be complete with circulating blower and cooling coil, insulated compressor compartment, hermetically sealed compressor, air-cooled condenser, condenser blower or fan, automatic controls, control panel with starters, relays, etc., all within a weatherproof insulated decorative casing. Each unit shall be furnished with 1" thick throwaway fiberglass filters.

C. Compressor shall be fully hermetic scroll type. Compressor shall be equipped with oil system, operating oil charge, and motor. Internal overloads shall protect the compressor from over-temperature and over-current. Compressor shall be

provided with crankcase heater to minimize liquid refrigerant accumulation during shut down and prevent refrigerant dilution of oil. Scroll compressors shall also have high discharge gas temperature protection if required. Motor shall be NEMA rated class F, suitable for operation in a refrigerant atmosphere. Compressor assembly shall be installed on rubber vibration isolators and shall have internal spring isolation. Compressors shall be single-phase, or 3-phase as specified on the contract drawings.

D. The system shall be complete with provisions for automatic defrost. Each unit shall be completely factory wired for terminal connections of thermostat with a fan on-auto-off switch.

E. Unit to be supplied complete with:
   1. 100% outside air economizer with power exhaust and factory controls.
   2. Programmable setback type thermostat and all controls. (As scheduled on the drawings).
   3. All optional plenums, adaptor kits, roof mounting frames, duct and diffusers as required for a complete installation, factory supplied as per the drawing and these specifications.
   4. Provide factory hail guards on the condenser coil sections of each unit.
   5. Low ambient control.
   6. High pressure and low-pressure controls.

PART 3 - PART 3 - EXECUTION

3.1 Installation

A. Contractor shall install units in accordance with manufacturer's recommendations. Unit shall be installed on concrete housekeeping pad. Condensate piping shall be connected to unit complete with flexible connector. All duct connections to unit shall have flexible connectors with 20-gauge sheet metal sun shields.

++ END OF SECTION ++

SECTION 15885

AIR CLEANING

PART 1 - GENERAL

1.1 Work Included

A. Comply with provisions.

B. Cleaning ducts and apparatus casings.

C. Cleaning HVAC systems equipment and piping.

D. Cleaning domestic water systems equipment and piping.

E. Cleaning compressed air systems equipment and piping.

F. Cleaning waste and vent systems equipment and piping.

1.2 Submittal

A. Submit seven (7) copies of Water Analysis and Test copies from Arizona State Certified Laboratory.

PART 2 - PRODUCTS

2.1 Not Applicable

PART 3 - EXECUTION

3.1 Ducts and Apparatus

A. Thoroughly clean ducts and apparatus casings before fans are operated with first set of filters. New filters are to be set in place for air balancing and Owner's beneficial use.

3.2 HVAC Systems and Piping

A. Verify coils are clean and free of debris on package units, both indoor and outdoor, prior to starting equipment.

B. Clean condensate drain piping including downstream traps.

C. Verify exhaust fans and exhaust hoods are clean and free of debris prior to starting equipment.

D. Prior to final acceptance by the Architect and the Owner's use, thoroughly clean all air supply, return, and exhaust modules, grilles, or registers.

3.3 Domestic Water System

A. Clean domestic water piping after cutting or reaming.

B. Flush system progressively by opening building operable valves, faucets, and hose bibbs and permitting flow to continue from each until water runs clear.

C. Sterilization/Disinfection: Disinfect/Sterilize the entire water distribution system thoroughly with a solution containing not less than 50 parts per million of available chlorine. For the chlorinating material use sodium hypochlorite solution, conforming to Federal Specification 0-8-441, Grade D, and introduce into the system in according with American Water Works Association (AWWA) Standard 601 or a manner approved by the Architect. Allow the sterilizing solution of no less than 25 parts per million to remain in the system for a period of 24 hours, during which time all valves and faucets shall be opened and closed several times.

D. After the disinfection process is complete, the water containing residual chlorine should be flushed from the system with potable water, and water samples collected for bacteriological examination. The Contractor will use the following procedures for conducting bacteriological testing:
   1. Submit water samples to an Arizona State certified laboratory.
   2. The Contractor will ensure analysis of drinking water is by the presence /absence method with ortho-nitrophenyl-B-d-galactopyranoside/4-methyl-umbelliferyl-B-d-glucuronide (ONPG/MUG) media. The water must be analyzed on-site for pH and chlorine residuals. The samples will be analyzed for total and fecal coliform, cultured the date of receipt at the laboratory, and read 24 hours later.
   3. The Contractor will use chain of custody records and submit these records along with the analytical report to the Architect. The analytical report will include on-site pH and chlorine residuals, and results of total and fecal coliform testing. The Contractor shall provide telephone notification to the Architect immediately following a detection of contaminant concentrations that exceed the Arizona or EPA maximum contaminant level (MCL). Prior to resuming use, the Contractor will disinfect any existing main, standpipe, reservoir, tank, or other pipe or structure through which water is delivered to consumers after cleaning, repairing, or cutting into this structure.
   4. After sterilization, flush the solution from the system with clean water until the residual chlorine content is not greater than 0.2 parts per million, unless otherwise directed. Note: Contractor shall provide the Architect with certification of test results.

3.4 Compressed Air Piping

A. Clean compressed air piping after cutting and reaming.

3.5 Waste and Vent Piping System

A. Verify all waste and vent piping system is free of debris prior to running water into any drain piping. Flush all plumbing fixtures in the presence of the Architect. Run faucets or showers a minimum of 5 minutes on full open for all fixtures in the presence of the Architect.

3.6 Condensate Water Piping System

A. Clean condensate water circulating water piping by circulating a trisodium phosphate solution heated to 120ºF to remove all oils and metal chips. Drain and flush piping system. Clean debris from Y-strainers. When systems are verified as thoroughly flushed and fresh water is added, meter into the piping the correct quantity of inhibitor to be used in the chemical treatment of these systems.

3.7 Factory Finishes

A. Clean items with factory finishes.

B. Touch up bare places, scratches, and other minor damage to finishes. Use only factory supplied paint of matching color and formula.

C. f finishes are damaged to any extent, including but not limited to scratches and unfinished spots, refinish the entire item. Architect will be the judge of whether refinishing is required.

3.8 General Cleanup

A. Upon completion of contract and progressively as work proceeds, clean up dirt, debris, oil materials, etc., and remove from site, keeping premises in neat and clean condition to satisfaction of the Architect.

B. Stainage, discoloration or other damage to parts of the building, its finish, or furnishings due to Contractor's failure to properly clean piping systems or duct systems shall be repaired without cost to the Owner.

++ END OF SECTION ++

SECTION 15890

DUCTWORK

PART 1 - GENERAL

1.1 Work Included

A. all labor, materials, equipment, and services necessary for the installation of all low-pressure sheet metal duct systems as herein described and as indicated on the drawings, complete with coordination with Electrical, Ceiling, Fire Sprinkler and Plumbing Contractors, straps, hangers, hardware, structural conditions, connection to all equipment, and accessories as necessary for a fully functional duct system.

B. Each system shall be complete with all accessories, etc., as described herein and in other sections of these specifications for a fully functional air handling system.

1.2 Quality Control and Regulatory Standards

A. SMACNA Manual: Sheet metal tradesmen shall have access to the 2nd Edition or latest Edition of "HVAC Duct Construction Standards" as published by SMACNA. The manual is referred to in specifications for required construction methods and details.

B. Conform to 2018 International Mechanical Code.

C. Conform to NFPA 90A standards for ducts.

D. Conform to ANSI/AWS D9.1.90.

1.3 Submittals and Shop Drawings

A. Submit seven copies of material/product data to Architect for approval in accordance with project requirements and include the following:
   1. Flexible duct.
   2. Spin-in fittings.

PART 2 - PRODUCTS

2.1 Acceptable Manufacturers

A. Sheet Metal Steel: U.S. Steel Co., Bethlehem Steel Co., Jones & Laughlin Steel Corp., Wheeling-Pittsburgh Steel Co.

B. Duct Sealants: Hardcast Inc., Childers, Miracle, Minnesota Mining & Mfg., Design Polymeric.

C. Flexible Duct: Flexmaster, Thermaflex, Manville.

D. Spin-in Fittings: Flexmaster.

E. Factory fabricated joints: Ductmate

2.2 Material

A. Galvanized Sheet Metal: For all ductwork except as otherwise specified.

B. Galvanized Ductwork: Galvanized, prime grade, lock-forming, quality steel (LFQ) having galvanized coating of 1-1/4 ounces total for both sides of 1 square foot of a sheet. Cross-break all sides of ducts.

C. Sheet Metal Turning Vanes: Factory fabricated, double thickness or galvanized sheet metal with airfoil contour.

D. Flexible Duct: Flexible, pre-insulated, vinyl coated fiberglass with corrosion-resistant, steel spiral reinforcing, designed for low velocity application. All duct, insulation and adhesives shall be fire and smoke resistant in conformance with NFPA 90A and UL 181 for Class 1 duct. Duct shall be Thermaflex Type MK-E as manufactured by Flexible Technologies, Inc. or approved.

E. Spin-in fittings with balancing dampers shall be Flexmaster or equal.

2.3 Flame Spread/Smoke Developed

A. All materials (i.e.: sealers, liners, pre-insulated jackets, flexible ducts, etc...) shall comply with a flame spread rating of 25 or less and a smoke developed rating of not over 50.

2.4 Fabrication

A. Longitudinal Seams: Pittsburgh lock groove, hammered flat. Tape all transverse joints of supply, return and exhaust ducts with DP-1010, canvas and Arabol, or reinforced Hardcast. Snap-lock and other non-specified seams are not acceptable.

B. Provide rectangular or round duct where required on drawings of prime quality steel sheets, thickness as required by the 1995 SMACNA HVAC Duct Construction Standards - Metal and Flexible.

C. Duct dimensions shown on drawings indicated inside clear dimensions. Make allowances for duct requiring internal sound lining.

D. In addition to the requirements above, add supplemental bracing as necessary to prevent sagging and drumming.

E. Make connections of round duct to rectangular duct using spin-in collars with balancing dampers.

F. Cross-break ductwork over 10" dimension, either side.

G. Provide ells fabricated to one of the following specifications:
   1. Unvaned elbow with the throat radius equal to 3/4 of the width of the duct and with a full heel radius.
   2. Elbows in rectangular duct to be square elbows with double thickness turning vanes spaced on 2-1/8" centers with 2" radius in ducts up to 20" in size and spaced on 3-1/4" centers with 4-1/2" radius in larger elbows. Install vanes in sections or use tie rods to limit the unbraced vane length.

H. Longitudinal seams shall be Pittsburgh lock hammered flat. Button punch, naplock longitudinal seam construction shall not be allowed.

I. Cross-break ductwork over 10" dimension, either side.

J. Do not exceed 1" in 7" of slope for increase-in-area transitions.

K. Do not exceed 1" in 4" of slope for decrease-in-area transitions, 1" in 7" is preferable.

L. Provide ells fabricated to one of the following specifications:
   1. Unvaned elbow with the throat radius equal to 3/4 of the width of the duct and with a full heel radius.

M. Make branches connections and tees in one of the following manners:
   1. Converging radius.
   2. Radius tap-in.
   3. Expanded throat take-off.

PART 3 - EXECUTION

3.1 Installation, Application, Erection

A. Support ductwork using suitable sheared strips of galvanized metals and/or trapeze hangers and rods as described in the latest edition of the SMACNA Manual and 2018 International Mechanical Code.

B. Attach hangers to the ductwork or trapeze hangers supporting the ductwork using sheet metal screws. Two (2) screws at strap sides and one (1) at under tab.

C. Secure hangers to concrete structure with approved anchor shields. Secure hangers to steel structure by mean of C-clamps or loop the metal support straps around and bolt using 1/4" machine bolts and nuts.

D. Space hangers approximately eight feet along the duct except as noted below. Provide any necessary steel to bridge joists for supporting of ductwork from roof of floor structure above. Suspend no ductwork from structural wall studs, joist X-Bracing or from metal roof decking.

E. Install all flexible ducts using two Panduit straps at each connection, one for inner duct, one for outer duct layer. No pressure-sensitive tape shall be used. Maximum length of flexible duct shall be 6'-0". No flexible duct runs or connections to be installed above a non-accessible ceiling space. Tape around flexible duct insulation to diffuser and fitting connections.

F. Connect all fans to ductwork using flexible connectors made of neoprene/fiberglass construction.

G. Flexible duct shall be supported at manufacturer's recommended intervals, but at no greater distance than four-foot intervals. The maximum permissible sag allowed for flex duct is ½ inch per foot between supports.

H. No ductwork shall be supported from any other appurtenances, i.e., piping, electrical conduit, reserved space for other trades, etc...

I. The hanger or saddle material in contact with the flexible duct should be of sufficient width to prevent any restriction of the internal diameter of the flex duct when the weight of the supported section of duct rests on the hanger or saddle material. The material contacting the flexible duct is required to be a metal strap not less than 1-1/2 inches in width.

3.2 Cleaning and Testing

A. Clean mechanical system thoroughly to assure all foreign matter, dirt, etc., is removed as required by Section 15030.

++ END OF SECTION ++

SECTION 15910

DUCTWORK ACCESSORIES

PART 1 - GENERAL

1.1 Work Included

A. Contractor shall provide and install all sheet metal accessories as specified herein and in locations shown on drawings, complete with all hardware necessary for a fully functional installation.

1.2 Quality Control

A. Air diffusers, grilles, and registers to have ratings certified by Air Diffusion Council and tested per ADC Equipment Test Code 1062R2 and ASHRAE Standard 36B-63.

1.3 Submittals

A. Submit seven (7) copies of Manufacturer's product data for all items listed in this section for review by the Architect.

B. Operation and Maintenance Manuals
   1. Submit complete installation, operation and maintenance manuals including test reports, maintenance data and schedules, description of operation and spare parts information.

PART 2 - PRODUCTS

2.1 Approved Manufacturers

A. Grilles, Registers and Diffusers: Titus, Krueger, Price.

B. Flexible Connections: Duro-Dyne, Ventfabrics.

C. Manual Dampers: Johnson Service, Carnes, Honeywell, Krueger, Penn, Ruskin, Metal-Form Mfg.

D. Turning Vanes: United Sheet Metal, Duro-Dyne, Elgin, Aero Dyne.

2.2 Registers, Grilles & Diffusers

A. See schedule on the drawings.

B. All Ceiling Diffusers shall be supported from the upper structure at a minimum of two places, one on each side of the device. Secure supports (support wire or sheet metal strap) to the air device, and to the structure.

2.3 Flexible Connections

A. Twenty-four-ounce glass fabric that is flameproof, airtight, ozone resistant, and a minimum of 3" wide with 3" of metal on each side of 3" of fabric using a grip lock seam, Duro-Dyne "Durolon" or approved equal.

2.4 Manual Dampers

A. Minimum of 16-gauge galvanized steel, maximum of 8" blade, opposed blade type, with manual quadrant.

2.5 Sheet Metal Turning Vanes

A. Factory fabricated, single thickness, galvanized sheet metal with airfoil contour. Shop fabricated duct turns must be submitted for approval prior to processing any work on project.

PART 3 - EXECUTION

3.1 Installation

A. Sheet metal accessories to be installed in locations shown on drawings.

B. Installation to be in accordance with manufacturer's published recommendations as well as applicable sections of the SMACNA manual.

C. Provide all screws, bolts, nuts, rivets, inserts, and material required for attaching sheet metal to duct, walls, floors, and ceilings.

3.2 Turning Vanes

A. Provide single thickness turning vanes in all 90-degree square elbows and elsewhere as indicated. Use acoustical turning vanes where indicated.

3.3 Duct Sizes

A. Indicated sizes are to the inside of acoustical linings. Increase the size of all sheet metal ducts as required accommodating acoustical lining.

3.4 Duct Openings

A. Construct duct openings at grilles or registers so that the plaster will not crack when the registers are attached.

3.5 Painting

A. Paint the inside of all supply, return and exhaust ducts and dampers one coat of dead black paint whenever visible through the openings. Where the duct insulation is visible through the grilles, registers, or diffusers, the insulation must have a black finish.

3.6 Flexible Connections

A. Provide flexible connections at the intake and discharge of all air handling and air conditioning units and elsewhere as indicated.

3.7 Measurements

A. Before fabrication, check all ductwork with the building construction for dimensions, locations, clearances, etc. Make up duct with any necessary variations to conform to the details of the construction of the building, to suit the space available, and to fit the equipment furnished. The entire duct system must be substantially constructed, rigidly erected and free of any duct vibration or noises.

3.8 Flashing

A. Flash all ducts passing through exterior walls.

3.9 Testing

A. Check work for satisfactory installation and performance.

B. Where applicable, check duct connections, access doors, etc., for leakage and condensation and correct conditions found.

++ END OF SECTION ++

SECTION 15936

AIR OUTLETS AND INLETS

PART 1 - GENERAL

1.1 SECTION INCLUDES

A. Registers/grilles.

1.2 SUBMITTALS

A. Product Data: Provide data for equipment required for this project. Review outlets and inlets as to size, finish, and type of mounting prior to submission. Submit schedule of outlets and inlets showing type, size, location, application, and noise level.

B. Shop Drawings: Submit for approval the following:
   1. A copy of this specification section, with addendum updates included, and all referenced and applicable sections, with addendum updates included, with each paragraph check-marked to indicate specification compliance or marked to indicate requested deviations from specification requirements. Check marks (✓) shall denote full compliance with a paragraph as a whole. If deviations from the specifications are indicated, and therefore requested by the CONTRACTOR, each deviation shall be underlined and denoted by a number in the margin to the right of the identified paragraph, referenced to a detailed written explanation of the reasons for requesting the deviation. The ENGINEER shall be the final authority for determining acceptability of requested deviations. The CONTRACTOR shall furnish equipment and/or services as specified if an exception and/or deviation is rejected. The remaining portions of the paragraph not underlined will signify compliance on the part of the CONTRACTOR with the specifications. Failure to include a copy of the marked-up specification sections, along with justification(s) for any requested deviations to the specification requirements, with the submittal shall be sufficient cause for rejection of the entire submittal with no further consideration.
   2. The CONTRACTOR shall submit the preventive maintenance information package as part of the shop drawing submittal package to the ENGINEER for review and approval. **SHOP DRAWING SUBMITTAL PACKAGE WILL NOT BE APPROVED WITHOUT ACCEPTANCE OF PREVENTIVE MAINTENANCE INFORMATION.**

PART 2 - PRODUCTS

2.1 MANUFACTURERS

A. Krueger.

B. Price Industries.

C. Titus.

2.2 CEILING SUPPLY REGISTERS/GRILLES

A. Type: Streamlined and individually adjustable curved blades to discharge air along face of grille, one-way deflection.

B. Frame: 1-1/4 inch (32 mm) margin with countersunk screw mounting and gasket.

C. Construction: Made of aluminum extrusions with factory clear lacquer finish.

D. Damper: Integral, gang-operated, opposed blade type with removable key operator, operable from face.

PART 3 - EXECUTION

3.1 INSTALLATION

A. Install in accordance with manufacturer's instructions.

B. Install diffusers to ductwork with air tight connection.

++ END OF SECTION ++

SECTION 15982

LINE VOLTAGE THERMOSTAT

PART 1 - GENERAL

1.1 WORK INCLUDED

A. Provide electric controls as specified herein and shown on the drawings, complete with all necessary coordination with Electrical Contractor, wiring dampers, checkout, and Owner training, for a fully functional control system.

B. Each air conditioning system shall have a separate stand-alone programmable thermostat to match the air conditioning unit.

C. Work is to be performed by a single contractor responsible for providing and installing the system specified using factory-trained and qualified technicians.

D. Install smoke detectors furnished by Electrical Contractor.

1.2 SUBMITTALS

A. Submit seven copies of control submittal literature for review by the Contracting Officer. Include the following:
   1. Complete shop drawings of entire control system.
   2. Composite wiring diagrams indicating interlocks of equipment, including smoke detectors.
   3. Written sequence of operation.

B. Equipment data sheets for all major components, including but not limited to:
   1. Electric thermostats.
   2. Smoke detectors, annunciator panel, and horn.

1.3 WARRANTY

A. At completion of final test of installation and acceptance, provide any service incidental to proper performance for a period of one year.

B. Warrant equipment for one year for defects in workmanship and material under normal use and service. Replace or repair free of charge equipment proven to be defective in workmanship or material.

PART 2 - PRODUCTS

2.4 ACCEPTABLE MANUFACTURERS

A. Package Rooftop Heat Pump Controls.

B. Duct Mounted Smoke Detectors and Annunciator Panel and Horn: Provided under Electrical sections of these specifications.

2.5 ROOFTOP PACKAGE COOLING/HEATING UNITS

A. Unit is to be complete with factory mounted controls to provide the following:
   1. Heating.
   2. Cooling.
   3. Fan only operation.
   4. Thermostat with sub-base heat-cool-on-off-auto.
   5. Economizer operation.
   6. Automatic changeover.
   7. Night set-back.

2.6 COMPONENTS

A. Provide supplementary or standalone components including electrical interlocks, relays, switches, and other devices and appurtenances as required to accomplish automatic control. Refer to drawings for details. Components to be included: room thermostats.

2.7 DUCT MOUNTED SMOKE DETECTORS

A. Simplex Model 2098-9648, photoelectric type with Simplex Model 2098-9791 or equal sampling tube.

B. Housing: Clear viewing window for observation of detector's alarm indicating LED.

C. Switch Relay: Integral with detector, wired to associated supply fan to stop fan when detector is actuated.

2.8 ANNUNCIATOR

A. Simplex Model 4001 or equal, eight-zone smoke detector alarm panel.

B. Suitable for flush mounting.

C. U.L. listed for power limited applications in accordance with NEC 760.

D. Twenty-four-hour battery backup.

E. Annunciate both detector alarm and trouble.

F. Alarm: 24-volt, DC horn with sound pressure level output of 87 db at 10 feet. Simplex model 2901-9701 or equal by ADT, Edwards, or Pyrotronics.

PART 3 - EXECUTION

3.9 INSTALLATION

A. Prepare coordinated composite wiring diagram showing all interlock wiring associated with starters, control panel, DX refrigeration compressors and other equipment as applicable.

B. Provide sequence of operation and as-built drawings to the Architect. All prints to be of "non-fading" print process such as blueprint, line Diazo, or xerography.

C. Electrical:
   1. Furnish electrical control components under this Division.
   2. Furnish and install all control wiring under this Division in accordance with NEC and local codes.
   3. Line voltage devices shall be installed under Division 16.
   4. Route wiring from the rooftop unit to thermostat and smoke detector panel in a separate conduit from line voltage wiring or other conductors that supply highly inductive loads.
   5. Furnish and install all sensor and actuator wiring under this Division.

D. Smoke Detectors and Annunciator:
   1. Install in accordance with manufacturer's recommendations.

3.10 QUALITY CONTROL

A. Control system to be set up and checked out by factory trained competent technicians skilled in the setting and adjustment of control equipment used in this project.

B. Demonstrate the entire sequence of operation for all systems to the Architect currently, Architect to observe function of control system, i.e., temperature control operations, damper positions, etc.

C. Return to the facility during the opposite season to verify operation of control systems. Give notice to the Architect when opposite season testing is scheduled.

D. Provide a minimum of 8 hours of instruction to operating personnel in the operation and maintenance of the control system.

++ END OF SECTION ++

SECTION 15990

TESTING, ADJUSTING, AND BALANCING

PART 1 - GENERAL

1.1 WORK INCLUDED

A. The Contractor shall include in his bid the services of an approved AABC or NEBB certified independent air balance and testing agency. A Contract for these services shall be issued to the Testing Agency by the Contractor within thirty (30) days of the Construction Contract being awarded.

B. The testing agency is to balance, adjust and test air-moving equipment and air and water distributing or exhausting systems as herein specified.

1.2 SUBMITTALS

A. Submit seven (7) copies of the Air Balance Report to the Architect for review one week after the balancing agency completes the field work.

B. Submit within 15 days after receipt of the contract, 7 copies of submittal data for the testing, balancing, of the air conditioning, heating, and ventilating systems.

C. The air balance agency shall provide proof of having successfully completed at least five projects of similar size and scope and shall be a certified member of Associated Air Balance Council or National Environmental Balance Bureau.

D. Submit calibration information on all instruments for use on the project.

E. Submit the test and balance contract to the Architect for approval within 90 days after the Air Conditioning Contractor has received his contract to proceed with the air conditioning installation to allow the air balance agency to schedule this work in cooperation with other trades involved and comply with the completion date.

PART 2 - PRODUCTS

2.1 ACCEPTABLE AIR BALANCE AGENCIES.

A. Technical Air Balance, Precision Air Balance, Arizona Air Balance, Technical Testing Inc., Commercial Systems Analysis.

2.2 ACCEPTABLE AIR TESTING LABORATORIES.

A. Environmental Testing Laboratories.

2.3 INSTRUMENTS.

A. All instruments used by this agency shall be accurately calibrated and maintained in good working order.

PART 3 - EXECUTION

3.1 COORDINATION

A. Do not begin air balance or testing until system has been completed and is in full working order. New filters must be installed by the Mechanical Contractor before balance work.

B. Put all ventilating and air conditioning systems and equipment into full operation and continue the operation of same during each working day of testing, and balancing.

3.2 BALANCING

A. Upon completion of the air conditioning system, the air balance agency shall perform the following test, compile the test data, and submit seven (7) copies of the complete test data to the Contractor for forwarding to the Architect for review and approval, including dates, time, personnel, status of operating of cooling or heating.

B. Testing Procedure: As a minimum the air and water balance agency shall perform the following tests, and balance system as follows:
   1. Test and adjust blower RPM to be within 5% of design requirements.
   2. Test and record motor full load amperes.
   3. Make pitot tube traverse of main supply ducts and obtain design CFM at fans when deemed necessary by the Architect.
   4. Test and record system static pressure, suction and discharge, fan total static pressure, and pressure drop across components.
   5. Test and adjust system for design CFM outside air.
   6. Test and adjust system for design CFM recirculated air.
   7. Test and record entering air temperatures (DB heating and cooling).
   8. Test and record entering air temperatures (WB cooling).
   9. Test and record leaving air temperatures (DB heating and cooling).
   10. Test and record leaving air temperatures (WB cooling).
   11. Adjust all main supply and return air ducts to proper design CFM.
   12. Adjust all zones to proper design CFM supply and return.
   13. Test and adjust each ceiling diffuser, grille and register to within 10% of design requirements while still maintaining required pressure relationships.
   14. Each grille, diffuser and register shall be identified as to location and area on a set of plans included with report.

15. Identify and list size, type and manufacture of diffusers, grilles, registers, and all tested equipment. Use manufacturer's ratings on all equipment to make required calculations.
16. Reading and tests of diffusers, grilles and registers shall include required velocity, required CFM, and test resultant CFM after adjustments.
17. In cooperation with the control manufacturer's representative, setting adjustments of automatically operated dampers to operate as specified, indicated and/or noted.
18. Adjust all diffusers, grilles, and registers to minimize drafts in all areas.
19. Check and record the amperage of each electric strip heater.
20. As part of the work of this contract, the Air Conditioning Contractor shall make any changes in the pulleys, belts and dampers or the addition of dampers required for corrected balance as recommended by air balance agency, at no additional cost to Owner.
21. The balance agency shall provide approved instrumentation to conduct the tests and balance all water flows. Adjust water flows to all coils and equipment to the specified amounts as shown on the plans. The balance agency shall use a portable field flow meter and the Air Conditioning Contractor shall provide 3/4" corporation stop cock on inlet and outlet side of coils and equipment. Air Conditioning Contractor shall consult with balance agency as to type and location of required fittings. Stop cocks or Petes plugs shall be located as close to actual coil entering and leaving as possible, so as not to take in any additional pressures caused by valves, elbows, etc. Prior to construction of piping systems, air conditioning contractor shall install these corporation stop cocks at his own expense should he fail to install them during the system construction prior to the water balance time.
22. The Balance Agency shall field verify each of the flow control valves at each equipment item requiring water flow, i.e., tower, chiller, heat exchanger, fan coil unit, air handler, heat pump unit, and as indicated on the drawings. The flow data and the model/manufacturer of each flow controller shall be indicated in the balance report.
23. The Contractor shall furnish the necessary labor to assist the testing agency to complete its work.
24. The Contractor shall furnish an automatic temperature controls, factory trained and authorized start-up man to assist the balance agency in operation of controls as required by the balance agency.
25. Test and balance agency shall include an extended warranty (in addition to the one-year guarantee period) of 90 days after completion or resetting of any outlet, supply air fan or exhaust fans as listed in test report. The agency shall provide technicians to assist the Architect in making any tests he may require during this period.

++ END OF SECTION ++

SECTION 16000

GENERAL ELECTRICAL REQUIREMENTS

PART 1 - GENERAL

1.1 SUMMARY

A. Section Includes:
   1. Work and materials necessary for erecting a complete electrical and instrumentation system, tested and ready for continuous use.

B. Related Sections:
   1. Division 0, Bid Requirements, Contract Forms, and Contract Conditions.
   2. Division 1, General Requirements.
   3. Division 2, Site Work.
   4. Division 3, Concrete.
   5. Division 9, Finishes.
   6. Division 11, Equipment.
   7. Division 13, Special Construction.
   8. Division 15, Mechanical.
   9. Division 17, Instrumentation.

1.2 DEFINITIONS

A. The term "Provide" means "Furnish and Install".

1.3 SYSTEM DESCRIPTION

A. Design Requirements:
   1. If any contradictions, contrasts, or inconsistency appears, the most strict criteria noted and the collective requirements in any and all of the Project documents shall apply.

1.4 SUBMITTALS

A. Intent:
   1. Organize Work so that a complete electrical, instrumentation, and control system for the facility will be provided and will be supported by accurate Shop Drawings, Record Drawings, and O&M Manuals.
   2. Submit detailed Shop Drawings and data prepared and organized by the suppliers. Provide quantity of submittal sets in accordance with the requirements of Division 1, General Requirements.
   3. Submittals shall be neatly grouped and organized by Specification Section number, and sub-section. Related information shall be highlighted and the

specific product shall be marked. All Submittals shall be complete and presented in one package. Incomplete Submittals will be returned without review. If a portion of the Project requires a fast track schedule, that portion only may be submitted earlier under a separate cover letter.

4. Work performed or equipment provided without ENGINEER approved Submittals is done at CONTRACTOR'S risk. Cost to re-work or re-supply will be born solely by the CONTRACTOR.

B. Product Data:
   1. A complete list of the equipment and materials, including the manufacturer's name, product Specification, descriptive data, technical literature, performance charts, catalog cuts, installation instructions, and spare part recommendations for each different item of the equipment specified. The above shall clearly show all the specified requirements as described in the Specifications including but not limited to specific UL and NEMA rating, technical capabilities, test result verifications, and acceptance letters.
   2. Submittals not in compliance with the Specifications must include the following information:
      a. Reason for non-compliance or variance.
      b. Calculations and Drawings for redesign of related components, including detail drawings showing internal and assembly details, with installation instructions.
      c. Proposed layout showing any modifications or exceptions to related Work made necessary by this Work, with calculations and drawings showing such modifications or exceptions.

C. Shop Drawings:
   1. Drawings containing complete wiring and schematic diagrams, control diagrams, and any other details required to demonstrate that the system has been coordinated and will operate as intended. Drawings shall show proposed layout, anchoring, support, and appurtenances of equipment, and equipment relationship to other parts of the Work, including clearances for maintenance and operations.

D. Utility Coordination:
   1. Submit copies of service entrance Shop Drawings to the utility, per utility submittal requirements, prior to submittal to the ENGINEER. Obtain written approval from the power utility company that the service entrance equipment is acceptable prior to release the order to the supplier for fabrication. Provide a copy of the approval letter from the utility with the Submittal.

E. Closeout Submittals:
   1. Provide "Record Drawings" of the electrical, control, and instrumentation work to include:

a. Step-by-step procedure manuals for the installation, operation start-up, and maintenance of the equipment.
b. Installation, operating, troubleshooting, and maintenance and overhaul instructions in complete detail.
c. Possible breakdowns and repairs, and troubleshooting guides, as well as simplified wiring and control diagrams of the system installed. This shall provide the OWNER with comprehensive information on all systems and components to enable operation, service, maintenance and repair.
d. Exploded or other detailed views of all equipment, devices, assemblies, and accessory components shall be included, together with complete parts lists and ordering instructions.

2. Provide an "As Built" set of Plans to OWNER. Maintain at all times a marked up set of Plans showing the following information:
   a. Actual installed circuit numbers, conduit sizes, cable tray routing, number of conductors, conductor sizes (larger than #12 AWG), and all other deviations from the Design Plans.
   b. Underground conduit, duct banks, and concealed items dimensioned on the Plans from permanent, visible, building features.
   c. Actual motor size, starter size, and overload heater size, along with all other protective equipment for all 480 V and 4160 V motor circuits.
   d. Conductor identification and panel schedules.

1.5 QUALITY ASSURANCE

A. Regulatory Requirements:
   1. Electrical work, including connection to electrical equipment integral with mechanical equipment, shall be performed in accordance with the latest published regulations, codes, and standards, of the following:
      a. National Electrical Code (NEC).
      b. State and local codes.
      c. Institute of Electrical and Electronic Engineers (IEEE).
      d. American National Standards Institute (ANSI).
      e. American Society for Testing and Materials (ASTM).
      f. Insulated Cable Engineers Association (ICEA).
      g. National Electrical Manufacturers Association (NEMA) Standards.
      h. Federal Occupational Safety and Health Act (OSHA).
      i. National Fire Protection Association (NFPA).
      j. National Electrical Testing Association (NETA).

1.6 DELIVERY, STORAGE, AND HANDLING

A. Electrical panels, switchgear, motor control centers, and other electrical equipment, shall be shipped in sealed dust and moisture proof plastic sheet

enclosures, and the seal maintained until units are installed. Said units shall be new and free of any dirt, dust, water, grease, rust, damaged parts, or components.

1.7 PROJECT/SITE CONDITIONS

A. Verify site conditions before bidding or performing Work.

1.8 SCHEDULING

A. Maintain a Work schedule showing Work to be performed, sequence of Work, major milestones, and manpower loading. Coordinate schedule requirements with other trades. Provide adequate staff to perform the Work in the time required by the schedule.

1.9 SYSTEM START-UP

A. After installation and testing of all electrical and instrumentation equipment and systems, energize all equipment and leave ready for continuous operation.

PART 2 - PRODUCTS

2.1 MANUFACTURERS

A. Manufacturers and model numbers shown on Plans or listed in the Specifications are intended to establish a minimum standard of quality and acceptability.

2.2 MATERIALS

A. Materials, equipment, and parts comprising any unit, or part thereof, specified or indicated on the Plans, shall be new and unused, of current manufacture, and of highest grade consistent with the state of the art. Damaged materials, equipment, and parts are not considered to be new and unused and will not be accepted.

2.3 MANUFACTURED UNITS

A. The fabricator of major components and manufactured units, such as distribution panel boards, switchgear, and motor control centers, shall also be the manufacturer of the major devices therein.

B. Electrical equipment provided with mechanical equipment assemblies shall be in compliance with this Specification.

2.4 EQUIPMENT

A. Minimum sizes of equipment and electrical devices are indicated, but it is not intended to show every offset and fitting, nor every structural or mechanical difficulty that will be encountered during the installation of the Work.

B. Electrical equipment shall be capable of operating successfully at full-rated load, without failure, at an ambient air temperature of 60º C, and specifically rated for the altitude indicated on the Plans. Provide air conditioning to meet the manufacturers' operating temperature for electrical equipment not rated for operation at that temperature.

C. When applicable, the material used in the performance of the electrical work shall be listed by the Underwriters' Laboratories, Inc. (UL), for the class of service for which they are intended.

D. Provide nameplates where indicated elsewhere in these Specifications or on the Plans. Nameplates shall be black laminate with white letters and fastened to the various devices with round head stainless steel screws. Provide nameplates for each disconnecting means for service, feeder, branch, or equipment conductors indicating its purpose.

2.5 FABRICATION

A. Shop Assembly:
   1. Equipment assemblies, such as Service Entrance Sections, Switchgear, Switchboards, Control and Distribution Panels, and other custom fabricated electrical enclosures, shall bear a UL label as a complete assembly. The UL label on the individual components making up the assembly will not be considered sufficient to meet the present requirement. Whenever a generic UL label does not apply for the assembly, a serialized UL label shall be affixed to the assembly, and the serial number shall be submitted with the assembly record Shop Drawings.
   2. Custom fabricated electrical control panels, and enclosures, shall bear a UL label affixed by a local UL inspector.

PART 3 - EXECUTION

3.1 EXAMINATION

A. Site Verification of Conditions:
   1. Verify site conditions before bidding or performing Work.

3.2 INSTALLATION

A. Coordinate Work with other trades and with certified vendor shop drawing submittals.

B. Provide equipment in accordance with the manufacturers' requirements.

C. Identify each conductor as required by the Contract Documents.

D. Equipment Access:
   1. Install equipment so it is readily accessible for operation and maintenance.
   2. Equipment shall not be blocked or concealed.
   3. Do not install electrical equipment such that it interferes with normal maintenance requirements of other equipment.

E. Equipment shall be installed plumb, square and true with the building construction, and shall be securely fastened.

F. Outdoor wall-mounted equipment and indoor equipment mounted on earth or water bearing walls, shall be provided with corrosion-resistant spacers to maintain 1/4-inch separation between the equipment and the wall.

G. Arrange for the building in of equipment during structure construction. Where equipment cannot be built-in during construction, arrange for sleeves, box-outs, and other openings, as required to allow installation of equipment after structure construction is complete.

H. Verify that equipment will fit support layouts indicated.

I. Screen or seal all openings into outdoor equipment to prevent the entrance of rodents and insects.

J. Equipment fabricated from aluminum shall not be imbedded in earth or concrete.

K. Provide all necessary anchoring devices and supports.
   1. Use supports as detailed on the Plans and as specified.
   2. Supports and anchoring devices shall be rated and sized based on dimensions and weights verified from approved equipment Submittals.
   3. Hardware shall be stainless steel.
   4. Do not cut, or weld to, building structural members.
   5. Do not mount safety switches and external equipment to other equipment enclosures, unless enclosure mounting surface is properly braced to accept mounting of external equipment.

L. Verify exact rough-in location and dimensions for connection to electrical items furnished by others.

1. Obtain Shop Drawings from those furnishing the equipment.
2. Proceeding without proper information may require the CONTRACTOR to remove and replace Work that does not meet the conditions imposed by the equipment supplied.
3. Provide sleeves wherever openings are required through new concrete or masonry members. Place sleeves accurately and coordinate locations with the ENGINEER.
4. Do not endanger the stability of any structural member by cutting, digging, chasing, or drilling and shall not, at any time, cut or alter the Work without the ENGINEER'S written consent.
    a. Provide additional reinforcing if required.
    b. Use proper tools and methods to cut, core drill, or make other penetrations.
    c. Restore walls, ceilings, or floors to their original condition.

M. Provide concrete foundations or pads required for electrical equipment as indicated or specified.
    1. Provide a 4-inch concrete housekeeping pad for floor mounted electrical equipment. Pour on top of the finished floor or slab. Drill existing slab and epoxy rebar to anchor housekeeping pad in place.

N. Do not use equipment that exceeds the indicated dimensions except as approved in writing by the ENGINEER.

O. Do not use equipment or arrangements of equipment that reduce required clearances or exceed the space allocation.

P. Work indicated on the Plans is approximately to scale, but actual dimensions and detailed Plans should be followed as closely as field conditions permit. Field verification of scale dimensions on Plans is governed by field conditions. Installation of systems and equipment is subject to clarification as indicated in reviewed Shop Drawings and field coordination.

Q. Discrepancies indicated on different Plans, between Plans and actual field conditions, or between Plans and Contract Documents shall be promptly brought to the attention of the ENGINEER for clarification, prior to purchasing and installing equipment.

R. Adjust the alignment of equipment and conduit to accommodate architectural changes or to avoid work of other trades.

S. Provide parts and pieces necessary to the installation of equipment, in accordance with the best practice of the trade, and in conformance with the requirements of these Contract Documents.

T. Items not specifically mentioned in these Contract Documents, or noted on the Plans, or indicated on reviewed Shop Drawings, but which are obviously necessary to make a complete working installation, shall be deemed to be included herein.

U. Lay out and install electrical work prior to placing floors and walls. Provide sleeves and openings through floors and walls, required for installation of conduits. Sleeves shall be rigidly supported and suitably packed, or sealed, to prevent ingress of wet concrete. Spacers shall be installed in order to prevent conduit movement. Dimensions indicated for electrical equipment and their installation are restrictive dimensions.

V. Provide inserts and hangers required to support conduits and other electrical equipment. Coordinate inserts and hangers with other trades. Replace inserts, hangers, sleeves, or other mounting hardware which are improperly placed.

W. Perform necessary saw cutting, core drilling, excavating, removal, shoring, backfilling, and other work required for the proper installation of conduits, whether inside, or outside of the buildings and structures. Use core drills to make circular holes.

X. Electrical Utility:
   1. Coordinate the electrical utility work with the electrical utility company. Note the additional submittal requirements under Paragraph 1.4.D of this Specification. Provide equipment and material required to bring electrical service to the service location in conformance with the electrical utility requirements. Provide the following for the electrical utility company's primary (from utility power line to the utility transformer) and secondary (from utility transformer to the service) electrical lines in accordance with the electrical utility company's specifications and requirements:
      a. Conduits (verify quantity and sizes).
      b. Trenching, backfill, and compacting (verify trench size(s), backfill material, and compaction percentage requirements).
      c. Concrete pad(s) (for pad mounted transformer(s).
      d. Cable protection along the vertical drop at the utility company's pole (if pole mounted transformer(s).
      e. Other items required by the power utility company's specifications.

Y. Telephone Service:
   1. Coordinate with the telephone company to provide telephone service as shown on the Plans. Provide trenching, conduit, and backfill for the telephone company's communication lines from the telephone company's main distribution panel to the telephone company's connection box at this Project site, as required by the telephone company.

Z. Temporary Power:
   1. Provide and maintain temporary power and lighting systems needed for construction. Work shall include:
      a. Weatherproof panel(s) for the CONTRACTOR'S main breakers and distribution system.
      b. Conduit and cable.
   2. Use ground fault interrupting equipment.
   3. Connections shall be watertight, with wiring done with Type SO portable cable.
   4. Route and support cables to avoid mechanical damage.
   5. Remove temporary power equipment and devices upon completion of construction.

AA. Corrosion Protection:
   1. Wherever dissimilar metals, except conduit and conduit fittings, come in contact, the CONTRACTOR shall isolate these metals, as required, with neoprene washers, 9 mil polyethylene tape, or gaskets. Where fastening conduit, electro plated, or equivalent fasteners and stainless steel bolts shall be used.

3.3 REPAIR/RESTORATION

A. Repair damage caused by construction or demolition work to restore damaged areas to original condition.

B. Factory finishes damaged during shipping, or construction, shall be restored to original new condition. Rust shall be removed, and bare metal surfaces shall be primed and painted to match the original surrounding finish.

3.4 FIELD QUALITY CONTROL

A. Site Tests:
   1. The electrical work shall be free from improper grounds and from short circuits. Visually compare the conductor connections with connection diagrams. Perform individual circuit continuity checks using electrical circuit testers. Demonstrate proper operation of the energized electrical and mechanical devices. Correct any wiring deficiencies.

3.5 ADJUSTING

A. Calibrate and set all adjustable electrical equipment, including circuit breakers, motor circuit protectors, overload relays. Align photo cells and lights to achieve desired effects.

3.6 CLEANING

A. Relays, starters, circuit breakers, switches, contacts, insulators, mechanisms, and buses shall be free of dust, dirt, oil, moisture, metal shavings, and other debris before testing and energizing equipment. Vacuum and wipe down inside and outside of electrical enclosures and control panels.

3.7 PROTECTION

A. Once equipment is installed, it shall be protected at all times with plastic sheet covers until the area is free of dirt, dust, paint spray, water, and other trades. Provide heat to eliminate condensation.

++ END OF SECTION ++

SECTION 16001

PACKAGED SYSTEMS AND PACKAGED CONTROL PANELS

PART 1 - GENERAL

1.1 SCOPE OF WORK

A. The CONTRACTOR shall furnish and install, ready to use, the complete Package Control System as indicated on the Drawings and the Contract Documents.

B. If any contradictions or inconsistencies appear, the most strict criteria noted and the collective requirements in any and all of the Contract Documents shall apply.

1.2 DEFINITION

A. Packaged Systems are those equipment(s) which are noted as such in the Contract Documents, the CONTRACTOR is providing those equipment(s) to function as a system, or the nature of the operation indicates so.

B. The Packaged Systems may include, but are not limited to, the following:
   1. Blower systems.
   2. Hydro-pneumatic tank systems.
   3. HVAC Chillers.
   4. Air Handling Units.
   5. Air Compressors/Dryers.
   6. Chemical feed & booster pumps.

1.3 SUBMITTALS

A. Provide submittals for the Packaged Control Panels in accordance with Section 16000, General Electrical Requirements, and the Contract Documents.

B. Shop Drawings: Submit for approval the following:
   1. A copy of this specification section, with addendum updates included, and all referenced and applicable sections, with addendum updates included, with each paragraph check-marked to indicate specification compliance or marked to indicate requested deviations from specification requirements. Check marks (✓) shall denote full compliance with a paragraph as a whole. If deviations from the specifications are indicated, and therefore requested by the CONTRACTOR, each deviation shall be underlined and denoted by a number in the margin to the right of the identified paragraph, referenced to a detailed written explanation of the reasons for requesting the deviation. The ENGINEER shall be the final authority for determining acceptability of requested deviations. The CONTRACTOR shall furnish equipment and/or

services as specified if an exception and/or deviation is rejected. The remaining portions of the paragraph not underlined will signify compliance on the part of the CONTRACTOR with the specifications. Failure to include a copy of the marked-up specification sections, along with justification(s) for any requested deviations to the specification requirements, with the submittal shall be sufficient cause for rejection of the entire submittal with no further consideration.

2. The CONTRACTOR shall submit the preventive maintenance information package as part of the shop drawing submittal package to the ENGINEER for review and approval. **SHOP DRAWING SUBMITTAL PACKAGE WILL NOT BE APPROVED WITHOUT ACCEPTANCE OF PREVENTIVE MAINTENANCE INFORMATION.**

1.4 RELATED SECTIONS

A. Related Sections may include, but are not limited to, the following:
   1. Section 16000, General Electrical Requirements.
   2. Section 16111, Conduits.
   3. Section 16123, 600 Volt Class Conductors.
   4. Section 16124, Instrumentation Class Cable.
   5. Section 16143, Terminal Blocks.
   6. Section 16160, Enclosures
   7. Section 16161, Control Panels.
   8. Section 16195, Electrical Identification.
   9. Section 16440, Disconnect Switches.
   10. Section 16461, Transformers - Dry-Type.
   11. Section 16470, Panelboards.
   12. Section 16476, Low Voltage Circuit Breakers.
   13. Section 16477, 600 V Fuses.
   14. Section 16481, Motor Control Centers (MCC).
   15. Section 16902, Electrical Control, Relays, and Alarms.
   16. Section 16485, Variable Frequency Drives - Low Voltage.

PART 2 - PRODUCTS

2.1 CONTROL SYSTEMS

A. Main disconnecting means.

B. Motor circuit protectors and starters for each motor.

C. Automatic motor alternation with manual override and lead selection. (If the system has more than one motor).

D. Capability to interface with other related systems/devices as described in the Contract Documents.

E. Control, delay, timer, and other relays as required.

F. Pushbutton and switches as follows:
   1. Start/ Stop.
   2. Hand-Off-Auto.
   3. Slow/Fast (if applicable).
   4. Forward/Reverse (if applicable).
   5. Emergency Stop.

G. Pilot Lights as follows:
   1. On/Off status.
   2. Manual/Auto Status.
   3. Slow/Fast Status (if applicable).
   4. Forward/Reverse Status (if applicable).
   5. Alarm (General malfunction).
   6. Alarms (Individual malfunctions).
   7. The Packaged Control Panel shall incorporate devices to visually represent all information needed to diagnose the individual malfunction alarm cause. The CONTRACTOR shall review and confirm all requirements with manufacturer(s) in order to bid a complete working package.

H. Indicators as follows:
   1. Speed LCD display (if VFD controlled).
   2. Running time meters for each motor.

I. Enclosures
   1. Refer to Section 16161, Control Panels, for more information.

J. The Packaged Systems shall be supplied for a single source of power (480 V, 3-phase, or 120/240 V, single-phase). All power and control transformers shall be provided as required. Transformers shall be sized and protected by fuses as required by NEC as a minimum.

K. The Packaged Systems shall include transient voltage surge suppressors.

L. The Packaged Systems shall include NEMA Rated auxiliary relays, amplifiers, and connections needed for transmission of specified information to the remote location. Auxiliary relays shall also be provided for control and status communication above and beyond the standard control panel.

PART 3 - EXECUTION

3.1 GENERAL

A. Electrical Power and Control:
   1. The CONTRACTOR shall provide electrical power for all the packaged units, including, but not limited to, all equipment, instruments, devices, controls, alarms, lights, etc., as recommended by the equipment manufacturer(s) installation instructions and recommendations, and the Contract Documents.

B. The CONTRACTOR shall review, verify, and confirm all requirements with the manufacturer in order to bid a complete working package and system. This includes, but is not limited to, package control panel, power distribution panel, transformer(s), conductors, inter/intra connections, and all other Work needed for a complete working system.

C. In the situation that a system is not specified and/or the CONTRACTOR is proposing an equal system, the CONTRACTOR shall provide all necessary equipment, instruments, devices, controls, alarms, lights, conduits, conductors, inter/intra connections, etc., in order to provide a complete system. These requirements are above and beyond what is shown on the Drawings and/or specified in the Specifications. The CONTRACTOR shall be fully responsible for any and all work resulting from changes requiring more than what is indicated on the Contract Documents.

D. The CONTRACTOR shall refer to Civil, Structural, Architectural, Mechanical, Electrical, P&ID Drawings, control descriptions, and all collective Contract Documents for complete information, requirements, implementations, and coordination in order to determine the system control logic.

++ END OF SECTION ++

SECTION 16010

ELECTRICAL: BASIC REQUIREMENTS

PART 1 - GENERAL

1.1 SUMMARY

A. Section includes basic requirements for electrical work.

B. Install and wire all equipment, including pre-purchased equipment, and perform all tests necessary to assure conformance to the Drawings and Specifications and ensure that equipment is ready and safe before energizing.

C. Related Sections include but are not necessarily limited to:
   1. Division 0, Bidding Requirements, Contract Forms, and Conditions of the Contract.
   2. Division 1, General Requirements.

D. Drawings Use and Interpretation:
   1. Drawings indicate the location and arrangement of electrical equipment and the approximate location of other equipment requiring electrical work.
      a. For exact locations of building elements, refer to dimensioned architectural/structural drawings.

E. Field measurements take precedence over dimensioned drawings Installation of all systems and equipment is subject to clarification as indicated in reviewed Shop Drawings and field coordination drawings.

1.2 AREA CLASSIFICATIONS

A. Outdoor locations may contain corrosive and hazardous areas:
   1. Corrosive and hazardous areas are identified on the Drawings.
      a. Areas not identified as such shall be considered wet.

B. Indoor locations may contain damp, wet corrosive, and hazardous areas:
   1. Damp, wet, corrosive and hazardous areas are identified on the Drawings.
      a. Areas not identified as such shall be considered unclassified.

1.3 DEFINITIONS

A. Outdoor Areas:
   1. Those locations on the Project site where the equipment is normally exposed to wind, dust, rain, snow, etc.

B. Indoor Areas:

1. Those locations on the Project site where the equipment is normally protected from wind, dust, rain, snow, etc.

C. Shop Fabricated:
   1. Manufactured or assembled equipment for which a UL test procedure has not been established.

1.4 QUALITY ASSURANCE

A. Referenced Standards:
   1. American Iron and Steel Institute (AISI):
      a. Steel Products Manual - Stainless and Heat Resisting Steel.
   2. American National Standards Institute (ANSI):
      a. C2, National Electrical Safety Code.
   3. American Society for Testing and Materials (ASTM):
      a. A36, Specification for Structural Steel.
      b. A153, Zinc Coating (Hot-Dip) on Iron and Steel Hardware.
   4. Factory Mutual System (FM):
      a. A Guide to Equipment, Materials and Services.
   5. Institute of Electrical and Electronics Engineers (IEEE):
      a. 141, Recommended Practice for Electrical Power Distribution for Industrial Plants.
      b. 242, Recommended Practice for Protection and Coordination of Industrial and Commercial Power Systems.
   6. National Electrical Manufacturers Association (NEMA):
      a. ICS 6, Enclosures for Industrial Controls and Systems.
   7. National Fire Protection Association (NFPA):
      a. 70, National Electrical Code (NEC).
   8. Underwriters Laboratories, Inc (UL):
      a. 508, Safety Industrial Control Equipment.
      b. 698, Industrial Control Equipment for Use in Hazardous Locations.

B. When a specific code or standard has not been cited, the applicable codes and standards of the following code-making authorities and standards organizations shall apply:
   1. American Association of State Highway and Transportation Officials (AASHTO).
   2. American Iron and Steel Institute (AISI).
   3. American National Standard Institute (ANSI).
   4. American Society for Testing and Materials (ASTM).
   5. ETL Testing Laboratories, Inc (ETL).
   6. Insulated Cable Engineers Association (ICEA).
   7. Institute of Electrical and Electronic Engineers (IEEE).
   8. Illuminating Engineering Society of North America (IES).
   9. Instrument Society of America (ISA).

10. Lightning Protection Institute (LPI).
11. National Electrical Manufacturers Association (NEMA).
12. National Fire Protection Association (NFPA).
13. Occupational, Health and Safety Administration (OSHA).
14. Underwriters Laboratories Inc (UL).

C. In case of conflict or disagreement between codes, standards, laws, ordinances, rules, regulations, Drawings, and Specifications, or within either document itself, the more stringent condition shall govern.

1.5 SYSTEM DESCRIPTION

A. Provide functional systems in compliance with manufacturer's instructions, performance requirements specified or shown on the Drawings, and modifications resulting from reviewed Shop Drawings and field coordinated drawings.

1.6 SUBMITTALS

A. Shop Drawings:
   1. See Contract Documents for other requirements.
   2. Submit shop drawings prior to purchase or fabrication of equipment. See individual Division 16, Electrical, Sections for specific requirements.
   3. Prior to submittals of Shop Drawings, coordinate electrical equipment, particularly motor control equipment, control panels, and instrumentation, with all applicable equipment and systems interfacing with that equipment.
   4. For each product, clearly identify manufacturer by name.
   5. Provide manufacturer's technical information on products to be used, including:
      a. Product descriptive bulletin.
      b. Electrical data pertinent to the Project and necessary to assure compliance with Specifications and Drawings.
      c. Equipment dimensions, where applicable.
      d. Evidence that the products submitted meet the requirements of the standards referenced.
   6. When general data sheets are provided as part of the submittal, specifically identify the products to be used on this Project.
   7. Ensure that all submittals clearly indicate the equipment is UL or ETL listed or is constructed utilizing UL or ETL listed or UL recognized components. Where an UL standard has not been established, clearly identify that no UL standard exists for that equipment.
   8. For all equipment, provide manufacturer's installation instructions.
   9. Submit for approval the following:
      a. A copy of this specification section, with addendum updates included, and all referenced and applicable sections, with addendum updates included, with each paragraph check-marked to indicate specification compliance or marked to indicate requested deviations from specification requirements.

Check marks (✓) shall denote full compliance with a paragraph as a whole. If deviations from the specifications are indicated, and therefore requested by the CONTRACTOR, each deviation shall be underlined and denoted by a number in the margin to the right of the identified paragraph, referenced to a detailed written explanation of the reasons for requesting the deviation. The ENGINEER shall be the final authority for determining acceptability of requested deviations. The CONTRACTOR shall furnish equipment and/or services as specified if an exception and/or deviation is rejected. The remaining portions of the paragraph not underlined will signify compliance on the part of the CONTRACTOR with the specifications. Failure to include a copy of the marked-up specification sections, along with justification(s) for any requested deviations to the specification requirements, with the submittal shall be sufficient cause for rejection of the entire submittal with no further consideration.

b. The CONTRACTOR shall submit the preventive maintenance information package as part of the shop drawing submittal package to the ENGINEER for review and approval. **SHOP DRAWING SUBMITTAL PACKAGE WILL NOT BE APPROVED WITHOUT ACCEPTANCE OF PREVENTIVE MAINTENANCE INFORMATION.**

B. Operation and Maintenance Manuals:
   1. See Contract Documents for requirements.

1.7 DELIVERY, STORAGE, AND HANDLING

A. See Section 01600.

B. Ensure that equipment is not used as steps, ladders, scaffolds, platforms, or for storage, either inside or on top of enclosures.

C. Protect nameplates on electrical equipment to prevent defacing.

D. Repair, restore, or replace damaged, corroded, and rejected items at no additional cost to the OWNER.

PART 2 - PRODUCTS

2.1 ACCEPTABLE MANUFACTURERS

A. Refer to related Division 16, Electrical, Sections.
   1. All equipment of a similar type shall be by one manufacturer, unless otherwise noted in the Specifications.

2.2 MATERIALS

A. Trade names and catalog numbers may be used in the Drawings or Specifications to establish quality standards and basics of design.
   1. Other listed manufacturers in the applicable Specification Sections with equal equipment may be acceptable.
   2. If no other manufacturer is listed, then manufacturers of equal equipment may be acceptable.

B. Listed:
   1. Where UL test procedures have been established for the product type, electrical equipment shall be approved by UL or ETL and shall be provided with the UL or ETL label.

C. Structural Steel Supports:
   1. Galvanized Steel: ASTM A36.
      a. PVC coated in Class I and in corrosive areas.
   2. Stainless Steel: AISI Type 316.

2.3 FABRICATION

A. When equipment is shop fabricated for the Project, the electrical devices and enclosures utilized shall be UL or ETL listed and labeled or shall be UL recognized.

B. Shop or Factory Finishes:
   1. Interiors of other painted equipment shall be either white or light gray.

PART 3 - EXECUTION

3.1 INSTALLATION

A. Equipment shall be installed in accordance with the requirements of the NEC.

B. Enclosures for Use with Electrical Equipment:
   1. NEMA 12: Use in unclassified indoor locations.
   2. NEMA 3R: Use with HVAC equipment.
   3. NEMA 4:
      a. Use in wet indoor locations.
      b. Use in wet outdoor locations except with HVAC equipment.
   4. NEMA 4X: Use in all corrosive locations.
   5. Exceptions:
      a. As modified in other Division 16, Electrical, Sections.
      b. As otherwise indicated on the Drawings.
   6. Standards:
      a. NEMA ICS-6, Enclosures for Industrial Controls and Systems.

b. UL 508, Safety Industrial Control Equipment.
c. UL 698, Industrial Control Equipment for Use in Hazardous Locations.

C. Coordinate the installation of electrical equipment with other trades.
1. Arrange for the building in of equipment during structure construction.
2. Where equipment cannot be built-in during construction, arrange for sleeves, box-outs, openings, etc., as required to allow installation of equipment after structure construction is complete.

D. Verify that equipment will fit support layouts indicated.

E. Equipment Dimensions and Clearances:
1. Do not use equipment that exceeds the indicated dimensions.
a. Except as approved in writing by the ENGINEER.
2. Do not use equipment or arrangements of equipment that reduce required clearances or exceed the space allocation.

F. Install equipment in accordance with the manufacturer's instructions.

G. Equipment Access:
1. Install equipment so it is readily accessible for operation and maintenance.
2. Equipment shall not be blocked or concealed.
3. Do not install electrical equipment such that it interferes with normal maintenance requirements of other equipment.

H. Equipment shall be installed plumbed, square, and true with the building construction and shall be securely fastened.

I. Outdoor wall-mounted equipment and indoor equipment mounted on earth or water bearing walls shall be provided with corrosion-resistant spacers to maintain 1/4-inch separation between the equipment and the wall.

J. Screen or seal all openings into outdoor equipment to prevent the entrance of rodents and insects.

K. Equipment fabricated from aluminum shall not be placed in direct contact with earth or concrete.

L. Provide all necessary anchoring devices and supports.
1. Use supports as detailed on the Drawings and as specified.
a. Where not detailed on the Drawings or specified, use supports and anchoring devices rated for the equipment load and as recommended by the manufacturer.
2. Supports and anchoring devices shall be rated and sized based on dimensions and weights verified from approved equipment submittals.

3. Hardware shall be malleable type, corrosion resistant, and shall be supported by heavily plated machine screws or brass, bronze or stainless steel bolts.
4. Do not cut, or weld to, building structural members.
5. Do not mount safety switches and external equipment to other equipment enclosures, unless enclosure mounting surface is properly braced to accept mounting of external equipment.

M. Provide concrete foundations or pads required for electrical equipment as indicated or specified.
1. Floor-mounted equipment shall be mounted on a 4-inch high concrete housekeeping pad. Pad shall be poured on top of the finished floor or slab.

N. Material that may cause rusting or streaking on a building surface shall not be used.

O. To avoid interference with structural members and equipment of other trades, it may be necessary to adjust the intended location of electrical equipment. Unless specifically dimensioned or detailed, the CONTRACTOR may, at his discretion, make minor adjustments in equipment location without obtaining the ENGINEER'S approval.

P. Provide tagging of electrical equipment, conduits, and conductors in accordance with the Contract Documents.
1. Each equipment item shall be provided with a nameplate identifying the equipment by the tag number shown on the Drawings.
2. Each branch circuit and feeder shall be provided with a nameplate identifying, by name and tag number as shown on the Drawings, the load served.
   a. Do not abbreviate.
3. Each control device shall be provided with an escutcheon defining the device function and a nameplate identifying the controlled equipment.

Q. Provide electrical danger, caution, warning or safety instruction signs in accordance with applicable safety standards.

R. Conduit and wire between temperature control thermostats and the associated HVAC equipment shall be furnished and installed with the equipment (see Division 15, Mechanical, of the Specifications).
1. Conduit and wire between alarm or shutdown thermostats and air flow switches and the associated alarm devices or panels shall be furnished and installed as part of Division 16, Electrical.
2. Thermostats included as part of a heat trace system shall be installed as part of Division 16, Electrical.

3.2 FIELD QUALITY CONTROL

A. Do not remove or damage fireproofing materials.

1. Install hangers, inserts, supports, and anchors prior to installation of fireproofing.
2. Repair or replace fireproofing removed or damaged.

B. Make all penetrations through roofs prior to installation of roofing.
   1. For penetrations required after installation of roofing:
      a. In built-up roofing (BUR), provide all curbs, cants and base flashings.
      b. In elastic sheet roofing (ESR), arrange and pay for base flashing work by authorized roofer.

C. Make all penetrations of electrical work through walls and roofs water and weather-tight.

D. Equipment furnished under this Contract for use on future work and all concealed equipment, including conduits, shall be dimensioned, on the Record Drawings, from visible and permanent building features.

E. After installation, test all electrical equipment and systems as recommended by the manufacturer and in accordance with Specification 16920, Electrical Acceptance Testing.

F. Test Equipment Interface:
   1. Verify systems coordination and operation.

3.3 CLEANING

A. Clean dirt and debris from all surfaces.

B. Apply touch-up paint as required to repair scratches, etc.

C. Replace nameplates damaged during installation.

D. Thoroughly vacuum the interior of all enclosures to remove dirt and debris.

3.4 DEMONSTRATION

A. Demonstrate equipment in accordance with the Contract Documents.

++ END OF SECTION ++

SECTION 16050

BASIC MATERIALS AND METHODS

PART 1 - GENERAL

1.1 DESCRIPTION

A. This Section consists of general electrical materials and methods. Electrical materials that are a part of equipment specified under other Sections shall meet the requirements of this Section, unless part of larger factory-assembled equipment.

1.2 SUBMITTALS

A. Submit manufacturer's literature for raceways and fittings, boxes, wires and cables, wiring devices, nameplates, legend plates, labels, panelboards, and safety switches, service entrance equipment, control panels, and any other electrical component utilized in this Project.

B. Shop Drawings: Submit for approval the following:
   1. A copy of this specification section, with addendum updates included, and all referenced and applicable sections, with addendum updates included, with each paragraph check-marked to indicate specification compliance or marked to indicate requested deviations from specification requirements. Check marks (✓) shall denote full compliance with a paragraph as a whole. If deviations from the specifications are indicated, and therefore requested by the CONTRACTOR, each deviation shall be underlined and denoted by a number in the margin to the right of the identified paragraph, referenced to a detailed written explanation of the reasons for requesting the deviation. The ENGINEER shall be the final authority for determining acceptability of requested deviations. The CONTRACTOR shall furnish equipment and/or services as specified if an exception and/or deviation is rejected. The remaining portions of the paragraph not underlined will signify compliance on the part of the CONTRACTOR with the specifications. Failure to include a copy of the marked-up specification sections, along with justification(s) for any requested deviations to the specification requirements, with the submittal shall be sufficient cause for rejection of the entire submittal with no further consideration.
   2. The CONTRACTOR shall submit the preventive maintenance information package as part of the shop drawing submittal package to the ENGINEER for review and approval. **SHOP DRAWING SUBMITTAL PACKAGE WILL NOT BE APPROVED WITHOUT ACCEPTANCE OF PREVENTIVE MAINTENANCE INFORMATION.**

1.3 QUALITY ASSURANCE

A. Refer to Section 16000, General Electrical Requirements.

1.4 SPARE PARTS

A. Provide spare components as indicated on Drawings and elsewhere herein.

PART 2 - PRODUCTS

2.1 BASIC MATERIALS

A. Electrical safety switches, distribution and control equipment shall be rated for heavy-duty service.

B. Wiring devices shall be Specifications Grade.

2.2 MISCELLANEOUS METAL AND MOUNTING CHANNELS

A. Metal Framing:
   1. Unless otherwise shown, mounting channels shall be cold rolled from mild strip steel, 12 gage, 1-5/8-inches by 1-5/8-inches, with 316 stainless steel by Unistrut, Unistrut P-1000, as manufactured by Unistrut, or equal.
   2. Screws, bolts, washers, and nuts shall be 316 stainless steel. Parts and brackets for assembly of channels shall be 316 stainless steel.

B. Miscellaneous Metal: 316 stainless steel, unless otherwise shown.

2.3 NAMEPLATES, LEGEND PLATES, AND LABELS

A. Nameplates: Laminated sheet plastic, approximately 1/16-inch-thick, with engraved white letters on a black background, with adhesive backing and mounting screw holes. Stainless steel or brass screws; minimum height of letters shall be 5/16-inch. Card holders are not acceptable.

B. Legend Plates: Type KN-3 standard legend plates; Square D, or equal.

C. Control Wire Markers: Heat-shrink sleeve types, manufactured by W.H. Brady Company or equal.

PART 3 - EXECUTION

3.1 BASIC MATERIALS

A. The completed installation shall conform to all applicable Federal, State, and local codes, ordinances, and regulations. CONTRACTOR shall obtain necessary permits and inspections required by the governing authorities. Work shall be done in a neat, workmanlike, finished and safe manner, according to the latest published NECA Standards of installation, under competent supervision. Install grounding as required by the National Electrical Code.

3.2 MISCELLANEOUS METAL AND MOUNTING CHANNELS

A. Install where electrical equipment is to be surface-mounted to walls and where indicated on Drawings. Where two or more devices are to be installed side by side, support on metal framing, bolt together, and brace as required to form a rigid structure.

B. Clean cuts and welds. Coat unpainted surfaces with cold application zinc galvanizing. Coat cuts and welds on painted surfaces with zinc chromate primer and finish to match existing paint.

3.3 NAMEPLATES, LEGEND PLATES, AND LABELS

A. Nameplates: Identify panels, switchgear, regulators, load-break junction boxes, disconnect switches, and component enclosures. Fasten nameplates with stainless steel self-tapping screws or rivets.
   1. Panels: Identify panel number, voltage, and amperage of panel bus.
   2. Switchgear: Identify equipment, voltage, amperage, and phase and number of wires.
   3. Safety Switches and Relays: Identify equipment controlled and circuits from which they are fed.

B. Legend Plates: Install on selector switches, pushbuttons, pilot lights, starters, and other components.

C. Control Wire Markers: Install at both ends of each control wire interconnecting between such items as control panels, sensors, and control devices at each end of control wires within control panels, and other such enclosures. Wiring markers shall correspond to control wire numbers on approved wiring diagrams.

++ END OF SECTION ++

SECTION 16060

ELECTRICAL DEMOLITION

PART 1 - GENERAL

1.1 SCOPE OF WORK

A. Demolition of existing electrical shall be as indicated on the Drawings or as indicated elsewhere herein.

B. Demolition information shown on the Drawings is based on visual field examination and existing Record Drawings. The CONTRACTOR is responsible for verification of all items indicated or not. All items affected that are not indicated on the Drawings shall be brought to the ENGINEER'S attention before demolition for direction.

C. The CONTRACTOR shall confine demolition work to the item specifically identified on the drawings. The CONTRACTOR shall be liable for any other damage he may inflict to the existing installations.

PART 2 - PRODUCTS

2.1 MATERIALS AND EQUIPMENT

A. Care shall be taken in demolition or removal of items as indicated on drawings as being returned to the OWNER. The CONTRACTOR shall notify the OWNER prior to removing existing equipment.

B. Whether indicated on the Drawings or not, the CONTRACTOR shall provide patching material to fill voids where demolition has taken place. Patching materials shall match, as nearly as practical, the existing original structure material for each surface being patched.

PART 3 - EXECUTION

3.1 COORDINATION

A. The CONTRACTOR shall verify existing field conditions, measurement, circuitry etc., as indicated on Drawings prior to performing any demolition.

B. The CONTRACTOR shall verify that abandoned or demolished wiring and electrical equipment serve only abandoned facilities. If demolished or abandoned

electrical is necessary for proper operation of facilities to remain in service, the CONTRACTOR shall immediately notify the ENGINEER for direction.

C. Demolition shall not be performed without coordinating with new construction to limit down time and ease of switchover. The CONTRACTOR must coordinate with the ENGINEER and the OWNER prior to any demolition.

D. Prior to performing any demolition work, the CONTRACTOR shall provide temporary wiring and connections to maintain existing systems in service during construction. Temporary wiring shall conform to the National Electrical Code.

3.2 PERFORMANCE

A. General: The means and methods of performing electrical demolition and removal operations are the sole responsibility of the CONTRACTOR. However, equipment used, and methods of demolition and removal will be subject to approval of the ENGINEER.
   1. Remove exposed abandoned conduit systems, including abandoned conduit systems in false ceilings.
   2. Remove wiring in abandoned conduit systems to source of power supply, where indicated.
   3. In exposed through-structure conduit or foundation locations, cut conduits and foundation below the finished structure surfaces in order to perform adequate surface patching.
   4. Maintain electrical continuity of existing electrical installations which remain active. Modify installations as necessary to maintain continuity and provide adequate access as required by the National Electrical Code.
   5. Extend existing installations using materials and methods compatible with existing electrical installations, and as specified elsewhere herein.
   6. Disconnect and leave in place electrical devices and equipment serving utilization equipment that has been removed or demolished.

B. Cutting: Perform cutting work of existing structure materials by such methods as will prevent extensive damage beyond the immediate area of cutting.

C. Unless otherwise indicated existing, electrical equipment, conduit, wire, etc., indicated for demolition shall be removed and disposed of in a lawful manner, off-site.

D. The CONTRACTOR shall move existing electrical equipment required to be returned to the OWNER, to locations as directed by the OWNER. Care shall be taken to ensure existing electrical equipment being returned to the OWNER does not become damaged. The CONTRACTOR shall provide a means for storing and or stacking of the returned equipment prior to moving to final location, if necessary.

E. Items Abandoned in Place:
   1. All items to be abandoned in place shall be de-energized.
   2. Connections shown or otherwise indicated as disconnected shall be removed with lugs left in place and with all conduit and cable openings properly plugged and sealed as required by the NEC.
   3. Any abandoned in-place equipment damaged by CONTRACTOR shall be repaired and restored to its original condition.

++ END OF SECTION ++

SECTION 16062

LIGHTNING PROTECTION

PART 1 - GENERAL

1.1 SUMMARY

A. Section includes:
   1. Design and installation of a complete lightning protection system.
   2. Materials and components for the lightning protection system.

B. Related sections:
   1. The Contract Documents are complementary; what is called for by one is as binding as if called for by all.
   2. It is the CONTRACTOR's responsibility for scheduling and coordinating the Work of subcontractors, suppliers, and other individuals or entities performing or furnishing any of CONTRACTOR's Work.
   3. The following sections are related to the Work described in this Section. This list of related sections is provided for convenience only and is not intended to excuse or otherwise diminish the duty of the CONTRACTOR to see that the completed Work complies accurately with the Contract Documents.
   4. Division 01.
   5. Division 07.
   6. Section 16050, Basic Materials and Methods.
   7. Section 16170, Grounding and Bonding.

1.2 REFERENCES

A. As specified in Section 16050.

B. Lightning Protection Institute (LPI):
   1. LPI-175 - Standard of Practice.

C. National Fire Protection Association (NFPA):
   1. ANSI/NFPA 780 - Standard for the Installation of Lightning Protection Systems.

D. Underwriters Laboratories, Inc. (UL):
   1. 96 - Standard for Lightning Protection Components.
   2. 96A - Standard for Installation Requirements for Lightning Protection Systems.

1.3 DEFINITIONS

A. As specified in Section 16050.

B. Specific definitions:
   1. LPI: Lightning Protection Institute.

1.4 SYSTEM DESCRIPTION

A. Retain the services of a lightning protection contractor to design, furnish, and supervise the installation of a complete lightning protection system, connected to the facility grounding system.

B. Lightning protection system: ANSI/NFPA 780; Class I UL 96A; master labeled system(s) protecting the building envelope and any roof-mounted mechanical equipment, consisting of:
   1. Air terminals on roof(s).
   2. Bonding of structure and other metal objects.
   3. Grounding electrodes.
   4. Interconnecting conductors.

C. Connect the lightning protection system to the facility grounding electrode:
   1. Provide common ground connections as necessary to the electric and telephone service conductors.

D. The installing contractor is responsible for all costs associated with UL inspection of the lightning protection system, including any costs associated with re-inspection necessary to obtain the UL 96A Master Label.

1.5 SUBMITTALS

A. Furnish submittals as specified in Sections 01300 and 16050.

B. Product data:
   1. Provide samples and pertinent catalog data for:
      a. Air terminals.
      b. Conductors.
      c. Connectors.
      d. Accessories.
      e. Include dimensions and materials of each component, and include indication of listing in accordance with UL 96.

C. Shop drawings:
   1. Including but not limited to:
      a. Layout of air terminals with the respective configuration of the zone of protection.
      b. Grounding electrodes, and bonding connections to structure and other metal objects.
      c. Type, size and locations for:
         1) Terminal.
         2) Electrode.

3) Conductor.
d. Conductor routing details.
e. Connection details.
f. Termination details.
g. Applicable air terminal and other calculations.

2. Details showing installation of air terminals, conductors, and connectors.
3. Shop Drawings: Submit for approval the following:
   a. A copy of this specification section, with addendum updates included, and all referenced and applicable sections, with addendum updates included, with each paragraph check-marked to indicate specification compliance or marked to indicate requested deviations from specification requirements. Check marks (✓) shall denote full compliance with a paragraph as a whole. If deviations from the specifications are indicated, and therefore requested by the CONTRACTOR, each deviation shall be underlined and denoted by a number in the margin to the right of the identified paragraph, referenced to a detailed written explanation of the reasons for requesting the deviation. The ENGINEER shall be the final authority for determining acceptability of requested deviations. The CONTRACTOR shall furnish equipment and/or services as specified if an exception and/or deviation is rejected. The remaining portions of the paragraph not underlined will signify compliance on the part of the CONTRACTOR with the specifications. Failure to include a copy of the marked-up specification sections, along with justification(s) for any requested deviations to the specification requirements, with the submittal shall be sufficient cause for rejection of the entire submittal with no further consideration.
   b. The CONTRACTOR shall submit the preventive maintenance information package as part of the shop drawing submittal package to the ENGINEER for review and approval. **SHOP DRAWING SUBMITTAL PACKAGE WILL NOT BE APPROVED WITHOUT ACCEPTANCE OF PREVENTIVE MAINTENANCE INFORMATION.**

D. Certificates:
1. Submit 2 notarized photocopies of the completed Application for UL Master Label for each lightning protection system.
2. Submit written confirmation of having obtained UL Master Label and LPI certification for each lightning protection system.
3. Photocopy of UL and LPI Installers' Certificate(s) for installation of lightning protection systems.
4. Written confirmation regarding the system manufacturer's and the system installer's membership in the Lightning Protection Institute.
5. Proof of the manufacturer and installer having been UL-listed and LPI-certified for at least 5 years.

E. Record Documents:

1. Provide Record Documents as specified in Sections 16050.
2. Accurately record actual locations of air terminals, grounding electrodes, bonding connections, and routing of system conductors.
3. Manufacturer's installation instructions.

1.6 QUALITY ASSURANCE

A. As specified in Section 16050.

B. Conform to the requirements of the UL and NFPA standards for lightning protection systems:
   1. Components shall be listed in accordance with UL 96.

C. Manufacturer’s qualifications:
   1. Company specializing in lightning protection equipment with minimum 5 years documented experience and a fully certified manufacturer member of the Lightning Protection Institute:
      a. Listed in section "Lightning Conductor, Air Terminals and Fittings" of the UL "Electrical Construction Materials Directory" for at least 5 years previous to this Contract's bid opening date.

D. Installers qualifications: Authorized installer for manufacturer with minimum 5 years documented experience. and member of the Lightning Protection Institute. member of the UL quality control program listed in section "Lightning Protection Installation" of the UL "Electrical Construction Materials Directory" for at least 5 years previous to this Contract's bid opening date and LPI-certified installer for installation of lightning protection systems for at least 5 years previous to this CONTRACTOR's bid opening date.

E. The lightning protection system shall meet the applicable requirements of NFPA 780.

F. Upon completion of installation the lightning protection contractor to have the building lightning system physically inspected by Underwriters Laboratories and furnish a UL Master Label for the building:
   1. Application for the UL Master Label without a physical inspection by UL is unacceptable.

1.7 DELIVERY, STORAGE, AND HANDLING

A. As specified in Section 16050.

1.8 SEQUENCING

A. Pre-installation conference:
   1. Convene a pre-installation conference 1 week before commencing the Work of this Section, as specified in Division 01 and Section 16050.

B. Coordinate Work with other trades to ensure neat, correct, and unobtrusive installation.

C. Coordinate the Work of this Section with roofing and exterior and interior finish installations.

1.9 WARRANTY

A. As specified in Section 16050.

1.10 SYSTEM STARTUP

A. As specified in Section 16050.

PART 2 - PRODUCTS

2.1 MANUFACTURERS

A. One of the following or equal:
   1. Erico.
   2. Thompson Lightning Protection, Inc.
   3. Harger Lightning and Grounding.
   4. VFC, Inc.

2.2 MATERIALS

A. Air terminals:
   1. Material: Copper when used with non-galvanized roofing and appurtenances. Aluminum where used with galvanized roofing. Chemical compatibility shall be assured, such that galvanic potential between lightning protection material and surfaces is minimized.
   2. Size : 3/8-inch by 18-inch minimum extending a minimum of 12 inches above the object to be protected.
   3. On flat or walkable roofs, provide air terminals with:
      a. Mushroom type blunt tip incapable of impalement if fallen upon.
      b. Spring mounted and capable of being pushed flush to the roof.
   4. Air terminal bases:
      a. Cast bronze with bolt pressure cable connections securely mounted with stainless steel screws and bolts.

B. Ground rods:
   1. As specified in Section 16060.

C. Ground plate: Copper.

D. Conductors:
   1. Perimeters:

a. Aluminum, where compatible with roofing and structure.
2. Down conductors:
a. Copper.
3. At least 32 strands of 17 gauge or larger copper wire weighing not less than 215 pounds per 1000 feet.
4. UL listed for the application.
5. Copper Cables connected to appropriate ground rod:
a. Perimeters and down conductors:
1) At least 32 strands of 17 gauge or larger copper wire weighing not less than 215 pounds per 1000 feet.
2) UL listed for the application.
6. Cable fasteners:
a. Electrolytically compatible with conductors and mounting surface:
1) Spaced in accordance with LPI and NFPA requirements.

E. Connectors and splicers: Bronze / Aluminum:
1. Make connections between dissimilar metals with approved bimetallic connectors.

F. Miscellaneous Materials:
1. Copper of type and size recommended by the manufacturer of the lightning protection system.
2. Stainless steel bolts, screws, and other threaded fasteners.

G. System: Aluminum components for aluminum roofing, compatible with aluminum roofing materials; mechanical connectors and transition joints between aluminum and copper, suitable, properly installed by trained personnel.

PART 3 - EXECUTION

3.1 EXAMINATION

A. It is the responsibility of the lightning protection subcontractor to review the electrical system design, and provide any and all additional equipment and materials needed in order to construct a master labeled UL lightning protection system.

B. Verify that surfaces are ready to receive work.

C. Verify that field measurements are as indicated on the Drawings and as specified elsewhere in this Section.

D. Protect elements surrounding Work of this Section from damage or disfiguration.

3.2 INSTALLATION

A. As specified in Section 16050.

B. Install systems in accordance with manufacturer's instructions unless otherwise specified in this Section.

C. Installation must be made under the supervision of an LPI certified master installer.
   1. Physically connect lightning protection equipment to structural roof framing members including metal deck.
   2. Do not attach lightning protection equipment to rigid roof insulation.
   3. Coordinate sealing roofing penetrations with roofing specifications to prevent leakage.

D. Conductor Installations:
   1. Install the lightning protection roof system(s) grounding and bending conductors exposed on flat roof areas and concealed at ridge roof areas.
   2. Install main downleads completely concealed and sleeved.
   3. Other than for the purpose of protecting downlead conductors from damage up to 6 inches above grade level, do not use exposed conduits to conceal the downleads on the exterior of the building(s) outside walls.
   4. Use minimum 1-inch PVC conduits to protect lightning system conductors from damage:
      a. Bond both ends of PVC-coated rigid steel conduit to conductor.

E. Clearances: Assure 6-foot minimum distance required by NEC:
   1. From lightning rod conductors to non-current-carrying metal parts of electrical equipment unless they are bonded to the rods.
   2. From lightning system conductors to open conductors of communication systems.
   3. From lightning protection grounding electrodes to electrodes of other grounding systems.

F. Extend air terminals a minimum of 12 inches above object to be protected.

G. Maintain horizontal or downward coursing of main conductor and ensure that bends have at least an 8-inch radius and that no bend of a conductor forms an included angle of less than 90 degrees.

H. Install ground electrodes not less than 1 foot below grade and not less than 2 feet from foundation walls.

I. Interconnection of Metals:
   1. Bond all metal bodies within 6 feet of the conductor to the system with approved fittings and conductor.

2. Connections between dissimilar metals shall be made with approved bimetallic connections.
3. Bond metal bodies of inductance located within 6 feet of a conductor or object with secondary bonds.

J. Bond all isolated metallic bodies at or below the roof subject to inductance and within 6 feet of lightning protection system conductors.

K. Provide necessary common grounds between the lightning protections system and the electric and telephone service entrance wires.

L. Ensure that air terminals are installed to withstand calculated wind force due to 100 miles per hour winds or as specified in Division 01, whichever is greater with a 1.3 gust factor without structural damage and without damage to integrity of the lightning protection system.

M. Protect down conductors entering corrosive soil against corrosion by a protective coating for not less than 3 feet above grade level and for the entire length below grade level until connection to the ground ring and rods.

3.3 FIELD QUALITY CONTROL

A. As specified in Section 16050:

B. Provide the services of Underwriters Laboratories, Inc. to physically inspect the entire lightning protection system and issue the UL Master Label:

C. Furnish Underwriters' Laboratories, Inc. Master Label as evidence that the installation has met with UL 96A code requirements.

D. Obtain LPI system certification reports and LPI system certification.

3.4 PROTECTION

A. As specified in Section 16050.

++ END OF SECTION ++

SECTION 16111

CONDUITS

PART 1 - GENERAL

1.1 SCOPE OF WORK

A. Furnish and install conduits as required and as shown on the Drawings. Materials employed shall be as shown on the Drawings.

1.2 SUBMITTALS

A. Submit product literature including manufacturer part number, model number, material, size, and specifications. Material shall not be installed until the ENGINEER has reviewed the submittal data.

B. Shop Drawings shall be submitted for review and acceptance showing routing, conduit size, and number and size of wires in each conduit before installation of conduit and any related work.

C. Proposed routing of conduits buried under floor slabs-on-grade.

D. Identify conduit by tag number indicated in the Conduit Block Diagrams on the Drawings, in accordance with Section 16195, Electrical Identification.

E. Proposed routing and details of construction including conduit and rebar embedded in floor slabs, columns, etc. Identify conduit by tag number of equipment served or by circuit schedule number.

F. Proposed location and details of construction for openings in slabs and walls for raceway runs.

G. Refer to Section 16000, General Electrical Requirements, for further submittal requirements.

H. Shop Drawings: Submit for approval the following:
   1. A copy of this specification section, with addendum updates included, and all referenced and applicable sections, with addendum updates included, with each paragraph check-marked to indicate specification compliance or marked to indicate requested deviations from specification requirements. Check marks (✓) shall denote full compliance with a paragraph as a whole. If deviations from the specifications are indicated, and therefore requested by the CONTRACTOR, each deviation shall be underlined and denoted by a number in the margin to the right of the identified paragraph, referenced to a detailed written explanation of the reasons for requesting the deviation. The

ENGINEER shall be the final authority for determining acceptability of requested deviations. The CONTRACTOR shall furnish equipment and/or services as specified if an exception and/or deviation is rejected. The remaining portions of the paragraph not underlined will signify compliance on the part of the CONTRACTOR with the specifications. Failure to include a copy of the marked-up specification sections, along with justification(s) for any requested deviations to the specification requirements, with the submittal shall be sufficient cause for rejection of the entire submittal with no further consideration.

2. The CONTRACTOR shall submit the preventive maintenance information package as part of the shop drawing submittal package to the ENGINEER for review and approval. **SHOP DRAWING SUBMITTAL PACKAGE WILL NOT BE APPROVED WITHOUT ACCEPTANCE OF PREVENTIVE MAINTENANCE INFORMATION.**

1.3 REFERENCES

A. American National Standards Institute (ANSI): C80.1, Rigid Steel Conduit - Zinc-Coated.

B. National Electric Manufacturers Association (NEMA), RN-1, Polyvinyl-Chloride (PVC) Externally Coated Galvanized Rigid Steel Conduit.

C. Underwriters Laboratories Inc. (UL):
   1. 1, Flexible Metal Conduit.
   2. 6, Rigid Metal Conduit.
   3. 360, Liquid-Tight Flexible Steel Conduit.
   4. 467, Grounding and Bonding Equipment.
   5. 514, Nonmetallic Outlet Boxes, Flush-Device Boxes and Covers.
   6. 651, Schedule 40 and 80 Rigid PVC Conduit.
   7. 870, Wireways, Auxiliary Gutters, and Associated Fittings.
   8. 884, Underfloor Raceways and Fittings.
   9. 886, Outlet Boxes and Fittings for Use in Hazardous (Classified) Locations.

PART 2 - PRODUCTS

2.1 RACEWAYS

A. Exposed conduit in an unclassified or hazardous area shall be galvanized rigid steel (GRS) unless specifically indicated otherwise on the Drawings. Conduits in wet and corrosive areas shall be PVC coated GRS, unless otherwise indicated. Underground and/or concrete encased conduits shall be PVC, unless otherwise indicated. All wiring, except as otherwise noted, shall be in conduit. Conduit size shall not be less than the National Electrical Code (NEC) size required for the

conductors therein and shall not be smaller than 3/4-inch. No underground conduit shall be less than 1-inch.

B. Condulet type fittings shall be Crouse-Hinds, Appleton, or equal with wedge nut covers. All condulets located outdoors or in wet locations shall be weathertight.

C. In unclassified areas, flexible conduit shall be grounding type, weatherproof, corrosion resistant, and watertight.

D. Couplings, connectors, and fittings shall be standard types specifically designed and manufactured for the purpose. They shall be installed to provide a firm mechanical assembly and electrical conductivity throughout.

E. Expansion fittings shall be OZ type AX with jumper for exposed locations and Type DX at structural expansion joints, Spring City, or equal. Conduits shall have expansion fittings in accordance with NEC.

F. The conduits and fittings shall be supported per NEC requirements as a minimum.

2.2 GALVANIZED RIGID STEEL (GRS)

A. Conduit and couplings shall be hot-dipped galvanized with zinc coated threads and outer coating of zinc bichromate, in accordance with ANSI C80.1 Standards, as manufactured by Jones & Laughlin Steel Corporation, Allied Tube & Conduit Corporation, Triangle PWC, or equal.

B. Steel conduit shall not be buried in earth without concrete encasement and additional corrosion protection. A half lapped rapping of 20 mil PVC based corrosion protection tape shall be used.

2.3 PVC COATED GALVANIZED RIGID STEEL (PVC-GRS)

A. PVC coated GRS conduit shall be installed where shown on the Drawings or elsewhere specified and shall conform to NEMA RN-1 and ANSI C80.1 Standards.

B. The zinc surface of the conduit shall remain intact and undisturbed on both the inside and the outside of the conduit throughout the preparation and application processing. A Polyvinyl Chloride (PVC) coating shall be bonded to the galvanized outer surface of the conduit. The bond between the PVC coating and the conduit surface shall be greater than the tensile strength of the plastic. The thickness of the PVC coating shall be a minimum of 0.040-inch (40 mil).

C. A loose coupling shall be furnished with each length of conduit. A PVC coating shall be bonded to the outer surface of the coupling and a PVC sleeve equal to the outside diameter of the uncoated conduit shall extend beyond both ends of the

coupling approximately one pipe diameter or 1-1/2-inches, whichever is smaller. The wall thickness of the coating on the coupling and the sleeve shall be a minimum of 0.040-inch (40 mil).

D. A PVC coating shall be bonded to the inner and outer surface of all conduit bodies and fittings and a PVC sleeve shall extend from all hubs. The wall thickness of the coating on conduit bodies and fittings and the sleeve walls shall be identical to those on couplings in length and thickness. The covers on all conduit bodies shall be coated on both sides and shall be designed to be completely interchangeable. The inside of conduit bodies shall remain undisturbed in the processing.

E. Type 304 stainless steel screws shall be furnished and used to attach the cover to the conduit body. All coated material shall be installed and patched according to the manufacturer's recommended installation and patching instructions.

F. Conduit straps shall be PVC coated or stainless steel.

G. PVC coated conduit and fittings shall be as manufactured by Rob-Roy, or equal.

H. PVC coated flexible conduits shall be liquid and vaportight and manufactured in accordance with UL 360 Standards.

2.4 RIGID NONMETALLIC – PVC

A. Where specifically indicated on the Drawings, or elsewhere specified, conduit may be high density Schedule 40, 90° C, heavy-duty PVC. The conduit shall be manufactured from virgin polyvinyl chloride compound which meets ASTM D1784, NEMA TC-2, ANSI C33.91, and UL 651 Standards. Smoke emissions shall be limited to less than 6 grams per 100 grams of material tested.

B. Where conduit concrete encasement is indicated on the Drawings, conduit supports shall be installed at 5 foot intervals. PVC conduit shall be manufactured by Carlon, Triangle Conduit & Cable, or equal.

2.5 LIQUIDTIGHT FLEXIBLE METAL CONDUIT

A. Liquidtight flexible metal conduit shall be liquid and vaportight, oil and ultraviolet ray resistant, and manufactured in accordance with UL 360 Standards. Liquidtight flexible metal conduit shall be formed of a continuous, spiral wound, galvanized steel core with an extruded PVC jacket. The PVC jacket shall be rated for high ambient heat applications, 90° Celsius.

B. For corrosive locations, liquidtight flexible metal conduit shall be formed of a continuous, spiral wound, aluminum core with an extruded PVC jacket. The PVC jacket shall be impervious to corrosive liquids and vapors.

C. An external bonding conductor shall be required for flexible conduit connections containing circuits rated at 60 amps or greater and for sizes 1-1/2-inches or larger. Flexible conduit and connectors for 1-1/4-inches and smaller shall be listed for grounding.

D. Connectors for liquidtight flexible conduit shall be galvanized, furnished with a sealing ring and locknut, and suitable for wet locations.

PART 3 - EXECUTION

3.1 INSTALLATION

A. Conduit runs are schematic only, and shall be modified as required to suit field conditions, subject to review and acceptance by the ENGINEER.

B. Conduit shall run continuously between outlets and shall be provided with junction boxes where connections are made. Couplings, connectors, and fittings shall be acceptable types designed and manufactured for the purpose, and shall provide a firm mechanical assembly, and electrical conductivity throughout.

C. Conduit runs shall be straight and true. Elbows, offsets, and bends shall be uniform and symmetrical. Changes in direction shall be made with long radius bends, or with fittings of the condulet type.

D. Conduit runs in buildings and structures shall be exposed except as specifically noted or accepted by the ENGINEER.

E. Conduit runs shall not interfere with the proper and safe operation of equipment, and shall not block or interfere with ingress or egress, including equipment removal hatches.

F. Exposed conduits shall be securely fastened with clamps, or straps, intended for conduit use. All exposed conduit shall be run on the walls and ceiling only and shall be parallel to the planes of the walls or ceiling. No diagonal runs will be permitted. Flexible conduit shall be used only for short lengths required to facilitate connections between rigid conduit to motors from junction boxes, or control equipment.

G. Conduit runs on water-bearing walls shall be supported 1-inch away from the wall on an accepted channel. When channel galvanizing, or other coating, is cut or otherwise damaged, it shall be field coated to original condition. No conduit shall be run in water-bearing walls, unless specifically designated otherwise.

H. Conduit shall be thoroughly reamed to remove burrs. GRS shall be reamed during the threading process, and rigid nonmetallic PVC shall be reamed before applying

fittings. A zinc rich cold galvanizing shall be used to restore corrosion protection on field cut threads. Bushings and lock nuts or hubs shall be used at conduit terminations. The total number of bends in any run between pull points shall not exceed 360 degrees. Junction boxes and pull boxes shall be installed at points acceptable to the ENGINEER. Conduit ends shall be plugged to prevent the entrance of moisture or debris during construction. All spare conduits shall be adequately capped and shall contain a suitable pull string.

I. Joints shall be set up tight. Hangers and fastenings shall be secure, and of a type appropriate in design, and dimensions, for the particular application.

J. Conduit runs shall be cleaned and internally sized (obstruction tested) so that no foreign objects, or obstructions remain in the conduit prior to pulling in conductors.

K. After installation of complete conduit runs 2-inches and larger, conduits shall be snaked with a conduit cleaner equipped with a cylindrical mandrel of a diameter not less than 85% of the nominal diameter of the conduit. Conduits through which the mandrel will not pass shall not be used.

L. Expansion fittings shall be installed across all expansion joints and at other locations where necessary to compensate for thermal expansion and contraction.

M. Provide trenching, backfill, and compaction for conduits installed underground.

N. Unless approved in advance by the ENGINEER, all conduits which transition from underground to aboveground will utilize galvanized rigid steel conduit for the bend from horizontal to vertical and for the extension above the ground. Factory 90 degree GRS bends shall be used. GRS bends and conduits shall be half lapped with 20 mil PVC tape in non-corrosive areas and shall be PVC coated rigid steel in corrosive areas. Tape wrapping shall extend a minimum 6-inches above top of slab or above finished grade.

O. Liquid tight flexible metallic conduit 1-1/2-inch and larger shall be provided with grounding style bushings and shall have an external ground wire sized and installed in accordance with the NEC.

++ END OF SECTION ++

SECTION 16117

CONCRETE MANHOLES, HANDHOLES AND PULL BOXES

PART 1 - GENERAL

1.1 RELATED DOCUMENTS

A. Drawing and general provisions of the Contract, including General and Supplementary Conditions, apply to this Section.

1.2 SUMMMARY

A. This Section includes the following:
   1. Concrete manholes and manhole accessories.
   2. Concrete handholes and handhole accessories.
   3. Concrete pullboxes and pullbox accessories.
   4. Related Sections: The following Sections contain requirements that relate to this Section:
      a. Division 02, Site Work: Excavation and Backfilling.
      b. Division 03, Concrete: Reinforcement, and Cast-in-Place.
      c. Division 07, Thermal and Moisture Protection: Bituminous Waterproofing.
      d. Division 15, Mechanical: Plumbing Specialties.
      e. Section 16111, Conduits.
      f. Section 16170, Grounding and Bonding.

1.3 REFERENCES

A. American Association of State and Highway Officials:
   1. AASHTO H20-92, Standard Specifications for Highway Bridges, Fifteenth Edition.
   2. American Standards for Testing and Materials:
   3. ASTM A48-94, Gray Iron Castings.
   4. ASTM A153-82, Zinc Coating (Hot-Dip) on Iron and Steel Hardware.
   5. ASTM A569-91, Steel, Sheet and Strip, Carbon (0.15% max), Hot-Rolled, Commercial Quality.
   6. ASTM C858-1983 Standard Specification for Underground Precast Concrete Utility Structures.
   7. American National Standards Institute (ANSI):
   8. ANSI-C2-l 997, National Electrical Safety Code.
   9. National Fire Protection Association (NFPA):
   10. NFPA-70-99, National Electrical Code.

1.4 SUBMITTALS

A. General: Submit each item in this Article according to the conditions stated in General and Supplementary Conditions.

B. Products furnished from listed manufacturers are pre-approved but still require submittal.

C. Submit proposed substitutions for approval in accordance with General and Supplementary Conditions.

D. Product Data for equipment specified, including the following:

E. Certified technical data sheets shall include load capacities for manhole, handhole, and pull box covers.

F. Shop Drawings: Show fabrication and installation details for underground utility structures and include the following:
   1. For manholes and handholes:
      a. Duct sizes and locations of duct entries.
      b. Reinforcement details.
      c. Manhole cover design.
      d. Step details.
      e. Cable Hanger details.
   2. Dimensioned locations of cable rack inserts, pulling-in irons, and sumps.
   3. For precast manholes, handholes and pull boxes: Shop Drawings shall be signed and sealed by a qualified professional engineer, and shall show the following:
      a. Construction of individual segments.
      b. Joint details.
      c. Design calculations.
   4. Shop Drawings: Submit for approval the following:
      a. A copy of this specification section, with addendum updates included, and all referenced and applicable sections, with addendum updates included, with each paragraph check-marked to indicate specification compliance or marked to indicate requested deviations from specification requirements. Check marks (✓) shall denote full compliance with a paragraph as a whole. If deviations from the specifications are indicated, and therefore requested by the CONTRACTOR, each deviation shall be underlined and denoted by a number in the margin to the right of the identified paragraph, referenced to a detailed written explanation of the reasons for requesting the deviation. The ENGINEER shall be the final authority for determining acceptability of requested deviations. The CONTRACTOR shall furnish equipment and/or services as specified if an exception and/or deviation

is rejected. The remaining portions of the paragraph not underlined will signify compliance on the part of the CONTRACTOR with the specifications. Failure to include a copy of the marked-up specification sections, along with justification(s) for any requested deviations to the specification requirements, with the submittal shall be sufficient cause for rejection of the entire submittal with no further consideration.

b. The CONTRACTOR shall submit the preventive maintenance information package as part of the shop drawing submittal package to the ENGINEER for review and approval. **SHOP DRAWING SUBMITTAL PACKAGE WILL NOT BE APPROVED WITHOUT ACCEPTANCE OF PREVENTIVE MAINTENANCE INFORMATION.**

G. Coordination Drawings, including plans and sections drawn to scale. Submit with Shop Drawings. Show layout and relationships between components and adjacent structural and mechanical elements. Show support sub-base criteria, type of support, and weight on each support. Indicate and certify field measurements.

H. Product Certificates: For concrete and steel used in manholes, handholes, and pull boxes according to ASTM C858.

1.5 QUALITY ASSURANCE

A. Drawing Compliance: Manholes, handholes, pull boxes, and accessories shall be designed, fabricated, and installed in compliance with the Drawings.

B. AAHSTO Compliance: Provide manhole covers that are listed and labeled by AAHSTO for loadings specified.

C. Coordination: Coordinate layout and installation of manholes, handholes, and pull boxes with other installations.

D. Comply with ANSI C2.

E. Comply with NFPA 7O.

1.6 DELIVERY, STORAGE, AND HANDLING

A. Deliver equipment as factory-fabricated modules with protective crating and covering.

B. Lift and support components with manufacturer’s designated lifting or supporting points.

1.7 SEQUENCING AND SCHEDULING

A. Coordinate size and location of sub-base materials and compaction with other sections of the specification.

1.8 COORDINATION

A. Coordinate layout and installation of manholes, handholes, and pullboxes with final arrangements of other utilities and site grading, as determined in the field.

B. Coordinate elevations of ducts and duct-bank entrances into manholes and handholes with final profiles of conduits as determined by coordination with other utilities and underground obstructions. Revise locations and elevations from those indicated as required to suit field conditions and to ensure duct runs drain to manholes and handholes, and as approved by Construction Manager.

PART 2 - PRODUCTS

2.1 MANUFACTURERS

A. Underground Precast Concrete Utility Structures:
   1. Carder Concrete Products.
   2. Christy Concrete Products, Inc.
   3. Elmhurst-Chicago Stone Co.
   4. Riverton Concrete Products.
   5. Rotondo Precast/Old Castle.
   6. Utility Vault Co.
   7. Wasau Concrete Co.
   8. Hartford Concrete Products, Inc.
   9. Heritage Concrete Pipe Co.
   10. Or equal.

B. Frames, Covers, and Accessories:
   1. Campbell Foundry Co.
   2. East Jordan Iron Works, Inc.
   3. McKinley Iron Works, Inc.
   4. Neenah Foundry Co.
   5. Flockhardt Foundry Co.
   6. A.B. Chance Co.
   7. Or equal.

2.2 PRECAST CONCRETE MANHOLES

A. Precast Concrete: Air-entrained, 5,000 psi (25 mPa) compressive strength at 28 days.

1. Reinforcing: AASHTO H20; bridge loading.
2. Construction: In modular sections with tongue and groove joints.
3. Manhole Shape: As indicated, and in accordance with ORNL standard ES-1.1-17 Type A standard electrical manhole.
4. Inside Dimensions: As indicated.
5. Wall Thickness: 4 1/2 in minimum.
6. Include 36-in. diameter grooved opening in top section.
7. Necking and Shaft Sections: 30-in. diameter clear opening.
8. Include 8-in. minimum drain opening and two 1-inch ground rod openings in base section.
9. Window for Duct Entry: As indicated.
10. Include cable pulling irons opposite each duct entry window.
11. Include inserts for cable racks at 2 ft. on center.

2.3 CAST-IN-PLACE MANHOLES

A. Concrete: 5,000-psi compressive strength at 28 days in conformance with requirements of Division 3, with steel bar reinforcing per ORNL standard ES-1.1-17.

B. Provide reinforcing under the provisions of Division 3, Concrete.

C. Provide two 1-inch ground rod openings in base.

2.4 MANHOLE ACCESSORIES

A. Manhole Frames and Covers: ASTM A48; Class 30B gray cast iron, machine finished with flat bearing surfaces. Cover shall have custom design cast into exposed face similar to SNS logo with either the word “ELECTRIC” for power manholes or “COMMUNICATIONS” for communications manholes.

B. Pulling Irons: 7/8-in. diameter steel bar forming a triangle of 9 in. per side when set. Galvanize to ASTM A153 for irregular shaped articles.

C. Cable Rack Inserts: Galvanized Steel channel insert with minimum load rating of 800 lb., length to match cable rack channel.

D. Cable Rack Channel: 2 1/4-in. X 2 1/4-in. X 1/4-in, galvanized steel channel wall bracket, 27 1/2-in. length, with 14 cable rack arm mounting holes on 1 1/2-in. centers.

E. Cable Racks: ASTM A569; steel channel, 2 1/2 in. X 10 1/2 in. with high-glazed, wet-process porcelain insulators or equal.

F. Manhole Steps: Cast iron, suitable for manhole shape and construction.

2.5 PRECAST CONCRETE HANDHOLES

A. Precast Concrete: Air-entrained, 5,000 psi (35 mPa) compressive strength at 28 days.

B. Reinforcing: AASHTO H20; bridge loading.

C. Construction: In modular sections with tongue and groove joints.

D. Dimensions: Minimum inside dimensions of 48 in. width X 66 in length X 54 in. depth.

E. Wall Thickness: 5 in.

F. Include 12-in. sump in base section.

G. Windows for Duct Entry: 4 duct terminators in each end and 2 duct terminators in each side, located as shown on Drawings.

H. Knockouts: 1-10 in. X 26 in. knockout in each end, and 1-6 in. X 24 in. knockout in each side, located as shown on Drawings.

I. Include cable pulling irons opposite each duct entry window.

2.6 HANDHOLE ACCESSORIES

A. Handhole Frames and Covers: steel angle cast-in-place frame, machine finished with flat bearing surfaces. AASHTO H20; bridge loading. Galvanized checker plate steel cover with formed galvanized steel beams, torsion springs and safety bars, cover shall have either the word “ELECTRIC” for power manholes or “COMMUNICATIONS” for communications handholes engraved in steel name plate on frame.

B. Pulling Irons: 7/8-in. diameter steel bar forming a triangle of 9 in. per side when set. Galvanize to ASTM A153 for irregular shaped articles.

2.7 PRECAST CONCRETE PULLBOXES

A. Precast Concrete: Air-entrained, 5,000 psi (25 mPa) compressive strength at 28 days.

B. Reinforcing: AASHTO H20; bridge loading.

C. Dimensions: Minimum inside dimensions of 10 1/2 in. width X 17 1/4 in length X 12 in. depth.

D. Wall Thickness: minimum 7/8-in.

E. Window for Duct Entry: 2 - 3” knockouts on each side and 1 - 3” knockout on each end.

2.8 PULLBOX ACCESSORIES

A. Covers: reinforced concrete, air-entrained, 5,000 psi (25 mPa) compressive strength at 28 days, AASHTO H20; bridge loading.

PART 3 - EXECUTION

3.1 PREPARATION

A. Excavate, install base material, and compact base material under provisions of Division 2, Site Work.

3.2 EXAMINATION

A. Examine sitework, duct bank installation subbase placement, levelness, and compactness before placing the manhole sections, handholes, or pullboxes.

B. Proceed with installation only after unsatisfactory conditions have been corrected.

3.3 INSTALLATION - PRECAST CONCRETE MANHOLES

A. Install and seal precast sections according to manufacturer’s instructions.

B. Use precast neck and shaft sections to bring manhole entrance to proper elevation.

C. Install manholes plumb.

D. Set top of each manhole to finished elevation indicated.

3.4 INSTALLATION - CAST-IN-PLACE CONCRETE MANHOLES

A. Form cast-in-place manholes, inside and outside surfaces, according to provisions of Division 3.

B. Manhole configuration, inside dimensions, wall thicknesses concrete reinforcing, and duct bank window sizes and locations: According to details.

C. Include 12-in. drain opening and two 1-in. ground rod openings in base section.

D. Cast cable pulling irons in place opposite each duct entry window.

E. Cast inserts for cable racks in place at 2 ft. centers.

F. Cast manhole steps in place on 16-in. centers.

3.5 INSTALLATION - MANHOLE ACCESSORIES

A. Install drains in manholes where shown on the drawings, and connect to daylight at the nearest location. Install ground rod with top protruding 4 in. above manhole floor.

B. Waterproof exterior surfaces, joints, and interruptions of manholes after concrete has cured 28 days minimum, in accordance with provisions of Division 7.

C. Attach cable racks to inserts after manhole installation is complete.

D. Install manhole covers.

E. Ground cable racks to manhole ground rod with #6 bare, solid copper conductor by exothermic weld process.

F. Bring exterior #4/0 bare copper cable into manhole and connect to ground rod in manhole floor.

G. Ground circuit #4/0 copper cable in 5” conduit to exterior cable in duct bank and manhole ground rod.

3.6 INSTALLATION - PRECAST CONCRETE HANDHOLES AND PULLBOXES

A. Install and seal precast sections according to manufacturer’s instructions.

B. Install handholes and pullboxes plumb.

C. Set top of each handhole and pullbox to finished elevation indicated.

3.7 FIELD QUALITY CONTROL

A. Verify that installed manholes, handholes, and pullboxes are installed plumb and level and that covers will be flush with final paved surfaces.

B. Check that accessories are installed according to specifications and drawings.

C. Inspect drain lines to verify proper drainage.

3.8 ADJUSTING

A. Adjust final manhole, handhole, and pullbox frame elevations to match that of final paving or grade.

3.9 CLEANING

A. Clean inside of manholes, handholes, and pullboxes from all construction debris and verify proper operation of drains (for both precast and cast-in-place manholes).

3.10 PROTECTION

A. Protect, handhole, and pullbox interiors from entrance of construction debris after final cleaning is complete.

++ END OF SECTION ++

SECTION 16123

600 VOLT CLASS CABLE

PART 1 - GENERAL

1.1 SCOPE OF WORK

A. This Section covers the furnishing and installation of 600 volt class cables and conductors, terminations and splicing, and pulling lubricants.

1.2 SUBMITTALS

A. Products shall be submitted in accordance with Section 16000, General Electrical Requirements, and elsewhere in the Contract Documents, prior to installation.

B. Shop Drawings: Submit for approval the following:
   1. A copy of this specification section, with addendum updates included, and all referenced and applicable sections, with addendum updates included, with each paragraph check-marked to indicate specification compliance or marked to indicate requested deviations from specification requirements. Check marks (✓) shall denote full compliance with a paragraph as a whole. If deviations from the specifications are indicated, and therefore requested by the CONTRACTOR, each deviation shall be underlined and denoted by a number in the margin to the right of the identified paragraph, referenced to a detailed written explanation of the reasons for requesting the deviation. The ENGINEER shall be the final authority for determining acceptability of requested deviations. The CONTRACTOR shall furnish equipment and/or services as specified if an exception and/or deviation is rejected. The remaining portions of the paragraph not underlined will signify compliance on the part of the CONTRACTOR with the specifications. Failure to include a copy of the marked-up specification sections, along with justification(s) for any requested deviations to the specification requirements, with the submittal shall be sufficient cause for rejection of the entire submittal with no further consideration.
   2. The CONTRACTOR shall submit the preventive maintenance information package as part of the shop drawing submittal package to the ENGINEER for review and approval. **SHOP DRAWING SUBMITTAL PACKAGE WILL NOT BE APPROVED WITHOUT ACCEPTANCE OF PREVENTIVE MAINTENANCE INFORMATION.**

1.3 REFERENCES

A. Insulated Cable Engineers Association/National Electrical Manufacturers Association (ICEA/NEMA):

1. S-68-516/WC 8, ethylene-propylene rubber-insulated wire and cable for the transmission and distribution of electrical energy.
2. S-61-402/WC 5, thermoplastic-insulated wire and cable for the transmission and distribution of electrical energy.
3. S-66-524/WC 7, cross-linked thermosetting-polyethylene-insulated wire and cable for transmission and distribution of electrical energy.

B. Underwriters Laboratory, Inc.
1. 44, rubber insulated wires and cables.
2. 83, thermoplastic-insulated wires and cables.
3. 486A, wire connectors and soldering lugs for use with copper conductors.
4. 486B, wire connectors for use with aluminum conductors.
5. 510, insulating tape.

C. National Electrical Code.

D. Insulated Cable Engineers Association.

PART 2 - PRODUCTS

2.1 ACCEPTED MANUFACTURERS

A. Conductors and Multi Conductor Cables (MCC), subject to compliance with Contract Documents, the following manufacturers are acceptable:
1. American Insulated Wire Corporation.
2. Cablec Corporation.
3. Okonite Company.
4. Southwire Company.
5. Or equal.

2.2 CONDUCTORS

A. Wire sizes shall be American Wire Gauge (AWG) sizes with Class B stranded construction. No. 2 AWG and smaller shall be factory color coded with a separate color for each phase and neutral, which shall be used consistently throughout the system. Larger cables shall be coded by the use of colored tape. Conductors sized No. 1 and larger shall be Type 2, rated for 90° C. All circuit conductors, #6 or smaller shall be "THWN" stranded copper. All other conductors shall be "XHHW" stranded copper.

B. Individual or multiple conductor cables for power, control, and alarm circuits of 480 volts or less shall be insulated for not less than 600 volts and shall have insulation type as indicated on the Drawings. "THHW" shall conform to ICEA S-61-402/NEMA WC 5 and UL 83 and "XHHW" shall conform to ICEA S-66-524/NEMA WC 7 and UL 44. Where wire size is not indicated, they shall be of

the size required by the NEC, except that no wire external to panels and motor control centers shall be less than No. 12 AWG, unless specifically noted on the Drawings. Panel control wiring shall not be less than No. 14 AWG.

C. All wiring shall be as indicated on the Drawings. Wires shall be new and shall be soft drawn copper with not less than 97% conductivity. The wire and cable shall have size, grade of insulation, voltage, and manufacturer's name permanently marked on the outer covering at not more than 2 foot intervals. All wires shall conform to the latest Standards of the ASTM, and ICEA, and shall be tested for their full length by these Standards. Insulation thickness shall be not less than that specified by the National Electrical Code.

2.3 TERMINATIONS AND SPLICES

A. Cable shall be rated 600 volts. Other parts of cable systems such as splices and terminations shall be rated at not less than 600 volts. Splicing shall join conductors mechanically and electrically to provide a complete circuit prior to installation of insulation.

B. Splices in wires No. 10 AWG and smaller shall be made with an insulated, solderless, pressure type connector, Type I, Class 1, Grade B, Style G, or Type II, Class 1 of FS W-S-610 and conforming to the applicable requirements of UL 486A.

C. Splices in wires No. 8 AWG and larger shall be made with noninsulated, solderless, pressure type connector, Type II, Class 2 of FS W-S-610, conforming to the applicable requirements of UL 486A and UL 486B. They shall then be covered with an insulation and jacket material equivalent to the conductor insulation and jacket.

D. Insulated conductor splices below grade or in wet locations shall be sealed type conforming to ANSI C119.1 or shall be waterproofed by a sealant-filled, thick wall, heat shrinkable, thermosetting tubing or by pouring a thermosetting resin into a mold that surrounds the joined conductors.

E. Bare conductor splices in wet locations or below grade shall be of the exothermic type.

2.4 PULLING LUBRICANT

A. All cables shall be properly coated with pulling compound such as ClearGluide, Aqua Gel, Polywater, or equal before being pulled into conduits so as to prevent mechanical damage to the cables during installation. "Yellow 77" is not acceptable.

B. Other lubricants to be substituted must be accompanied by a statement from the cable manufacturer as to its acceptable use with the cable being installed.

2.5 IDENTIFICATION

A. All conductors shall be numbered with "tube sleeve" type tags with heat impressed letters and numbers.

B. Color code all wiring as follows:
   1. Lighting and Power Wiring:

Conductor	120/208 VAC	480VAC	24V DC	120 VAC Control/ Power
Phase 1	Black	Brown	Blue	Red
Phase 2	Red	Orange	(-) Blue w/ white stripe	
Phase 3	Blue	Yellow		
Neutrals	White	White		White

   2. Color code ends of feeder phase conductors only.

PART 3 - EXECUTION

3.1 INSTALLATION

A. The pulling tension and side-wall pressures, as recommended by the cable manufacturer, shall not be exceeded.

B. As far as practical, all circuits shall be continuous from origin to termination without splices in intermediate pull boxes. Sufficient slack shall be left at the termination to make proper connections. In no case shall a splice be pulled into the conduit. Conductor splicing shall not be permitted without the ENGINEER'S approval.

C. Install all cables in conduit.

D. Each feeder and branch circuit shall be installed in its own individual conduit, unless combining feeder and branch circuits is permitted as defined in the following:
   1. As specifically indicated on the Drawings.
   2. For lighting, multiple branch circuits may be installed in a conduit as allowed by the NEC and with the wire ampacity derated in accordance with the requirements of the NEC. Conduit fill shall not exceed the limits established by the NEC.

3. When field conditions dictate and written permission is obtained from the ENGINEER.

E. Feeder and branch circuits shall be isolated from each other and from all instrumentation and control circuits.

F. Control circuits shall be isolated from all other feeder, branch and instrumentation circuits, except as noted below:
   1. 12 VDC, 24 VDC and 48 VDC control circuits may be combined in common conduit.
   2. 125 VDC control circuits shall be isolated from all other DC and AC control circuits.
   3. 120 VAC, 240 VAC, and 480 VAC power and control circuits shall be isolated from all DC control circuits.

G. Make splices only at pull or junction boxes.
   1. Splices are not allowed, except if approved by the Engineer.
   2. Crimp or indented-type connectors are not allowed, except for control circuits landed on terminal strips.

3.2 TESTING

A. In accordance with Specification 16920 Electrical Acceptance Testing.

++ END OF SECTION ++

SECTION 16124

INSTRUMENTATION CLASS CABLE

PART 1 - GENERAL

1.1 SCOPE OF WORK

A. This Section covers cable use for process signal and controls.

1.2 SUBMITTALS

A. Products shall be submitted in accordance with Section 16000, General Electrical Requirements, and elsewhere in the Contract Documents, prior to installation.

B. Shop Drawings: Submit for approval the following:
   1. A copy of this specification section, with addendum updates included, and all referenced and applicable sections, with addendum updates included, with each paragraph check-marked to indicate specification compliance or marked to indicate requested deviations from specification requirements. Check marks (✓) shall denote full compliance with a paragraph as a whole. If deviations from the specifications are indicated, and therefore requested by the CONTRACTOR, each deviation shall be underlined and denoted by a number in the margin to the right of the identified paragraph, referenced to a detailed written explanation of the reasons for requesting the deviation. The ENGINEER shall be the final authority for determining acceptability of requested deviations. The CONTRACTOR shall furnish equipment and/or services as specified if an exception and/or deviation is rejected. The remaining portions of the paragraph not underlined will signify compliance on the part of the CONTRACTOR with the specifications. Failure to include a copy of the marked-up specification sections, along with justification(s) for any requested deviations to the specification requirements, with the submittal shall be sufficient cause for rejection of the entire submittal with no further consideration.
   2. The CONTRACTOR shall submit the preventive maintenance information package as part of the shop drawing submittal package to the ENGINEER for review and approval. **SHOP DRAWING SUBMITTAL PACKAGE WILL NOT BE APPROVED WITHOUT ACCEPTANCE OF PREVENTIVE MAINTENANCE INFORMATION.**

PART 2 - PRODUCTS

2.1 ACCEPTABLE MANUFACTURERS

A. Subject to compliance with Contract Documents, the instrumentation cable shall be as manufactured by Belden, Okonite, or equal.

2.2 INSTRUMENTATION CABLE

A. Instrument cable shall be Type TC, and have the number of individually shielded twisted pairs indicated on the Drawings and shall be insulated for not less than 600 volts. Unless otherwise indicated, conductor size shall be No. 16 AWG minimum. Shielded, grounded instrumentation cable shall be used for all analog signals.

B. The jacket shall be flame retardant with 90° C temperature rating. The cable shield shall be a minimum of 2.3 mil aluminum or copper tape overlapped to provide 100% coverage and a tinned copper drain wire.

C. The conductors shall be bare soft annealed copper, Class B, 7 strand minimum concentric lay with 15 mils nominal thickness, nylon jacket, 4 mil nominal thickness, 90° C temperature rating. One conductor within each pair shall be numerically identified.

D. Pairs shall be assembled with a nominal 2-inch lay and shall then be group shielded with a minimum of 1.3 mil aluminum or copper tape overlapped to provide 100% coverage. All group shields shall be completely isolated from each other.

PART 3 - EXECUTION

3.1 INSTALLATION

A. Feeder and branch circuits shall be isolated from each other and from instrumentation and control circuits. Instrumentation cables shall be installed in separate raceways from other cables and wiring. This includes portions running through manholes. Instrumentation cable shall be continuous between instruments or between field devices and instrument enclosures. There shall be no intermediate splices or terminal boards, unless otherwise shown on the Drawings.

B. Maintain electrical continuity of the shield when splicing twisted shielded pair conductors. Drain wires shall be terminated inside enclosures at grounded terminal blocks. Only one end of each instrument loop cable drain wire shall be grounded. Ground the drain wire of shielded conductors at one end only.

C. Terminate instrumentation and control wiring, including spare wires, at control panels and motor control centers on terminal boards mounted inside the equipment.
   1. Contractor shall supply terminal boards as required.
   2. Do not field wire directly to devices.

++ END OF SECTION ++

SECTION 16130

OUTLET, PULL, AND JUNCTION BOXES

PART 1 - GENERAL

1.1 SUMMARY

A. Section includes outlet, pull and junction boxes.

B. Related Sections include but are not necessarily limited to:
   1. Division 0, Bidding Requirements, Contract Forms, and Conditions of the Contract.
   2. Division 1, General Requirements.
   3. Section 01650, Commissioning and Process Start-up.
   4. Section 16000, General Electrical Requirements.
   5. Section 16111, Conduits.
   6. Section 16141, Wiring Devices.
   7. Section 16170, Grounding and Bonding.

1.2 QUALITY ASSURANCE

A. Referenced Standards:
   1. Refer to Section 16000, General Electrical Requirements.

1.3 SUBMITTALS

A. Shop Drawings:
   1. Refer to the Contract Documents and Section 16000, General Electrical Requirements.

B. Shop Drawings: Submit for approval the following:
   1. A copy of this specification section, with addendum updates included, and all referenced and applicable sections, with addendum updates included, with each paragraph check-marked to indicate specification compliance or marked to indicate requested deviations from specification requirements. Check marks (✓) shall denote full compliance with a paragraph as a whole. If deviations from the specifications are indicated, and therefore requested by the CONTRACTOR, each deviation shall be underlined and denoted by a number in the margin to the right of the identified paragraph, referenced to a detailed written explanation of the reasons for requesting the deviation. The ENGINEER shall be the final authority for determining acceptability of requested deviations. The CONTRACTOR shall furnish equipment and/or services as specified if an exception and/or deviation is rejected. The remaining portions of the paragraph not underlined will signify compliance on the part of the CONTRACTOR with the specifications. Failure to include

a copy of the marked-up specification sections, along with justification(s) for any requested deviations to the specification requirements, with the submittal shall be sufficient cause for rejection of the entire submittal with no further consideration.

2. The CONTRACTOR shall submit the preventive maintenance information package as part of the shop drawing submittal package to the ENGINEER for review and approval. **SHOP DRAWING SUBMITTAL PACKAGE WILL NOT BE APPROVED WITHOUT ACCEPTANCE OF PREVENTIVE MAINTENANCE INFORMATION.**

1.4 DELIVERY, STORAGE, AND HANDLING

A. See Section 16000, General Electrical Requirements.

PART 2 - PRODUCTS

2.1 ACCEPTABLE MANUFACTURERS

A. Subject to compliance with the Contract Documents, the following manufacturers are acceptable:
   1. Sheet Metal Boxes for Indoor and Non-classified Areas:
      a. Hoffman Engineering Co.
      b. Rittal.
   2. Boxes for Outdoor and Corrosion Areas:
      a. Hoffman Engineering Co.
      b. Rittal.
   3. Hazardous Location Boxes (Class I, II & III):
      a. Appleton Electric Co.
      b. Crouse-Hinds.
      c. Killark.
      d. O-Z/Gedney.
   4. Raintight and Watertight Boxes:
      a. Appleton Electric Co.
      b. Crouse-Hinds.
      c. Terminal Boxes:
      d. Hoffman Engineering Co.
   5. Boxes in Sidewalk:
      a. Appleton Electric Co.
      b. Crouse-Hinds.
      c. O-Z/Gedney.
   6. Boxes in Earth:
      a. Carlon Electric Products.
   7. Exposed Switch and Receptacle Boxes:
      a. Appleton Electric Co.
      b. Crouse-Hinds.

c. Killark.

B. Submit requests for substitution in accordance with the General Conditions.

2.2 MATERIALS

A. Pull and Junction Boxes for Offices and other Dry Architecturally Finished Areas:
1. Material: 14 gauge, galvanized steel.
2. Concentric knockouts on all four sides.
3. Flat cover fastened with screws.
4. NEMA 1 Classification.
5. UL listed.
6. Pull and Junction Boxes for General Use Indoors in Unclassified Areas:
7. Material: 14 gauge galvanized steel with seams continuously welded, ground smooth and no knockouts.
8. Zinc rich coating on all seams.
9. Stainless steel captivated cover screws threaded into sealed wells.
10. Flat door with oil resistant gasket.
11. NEMA 12 Classification.
12. UL listed.

B. Pull and Junction Boxes for Outdoor and Corrosive Areas:
1. Material: 316 Stainless Steel.
2. Stainless Steel boxes:
3. Seams continuously welded, ground smooth, no knockouts.
4. Rolled lip around all sides.
5. Hinged door.
6. Captivated stainless steel door screws.
7. Flat door with oil-resistant gasket.
8. NEMA 4X Classification.
9. UL listed.

C. Pull and Junction Boxes for Hazardous Areas:
1. Material: Cast gray iron alloy or copper-free cast aluminum.
2. Drilled and tapped openings or tapered threaded hub equipped.
3. Flat bolted down or threaded cover with neoprene gasket.
4. Stainless steel hex head screws.
5. Explosion proof, UL listed for Class 1, Groups C and D.

D. Pull and Junction Boxes for Sidewalks:
1. Cast iron box and cover, hot-dip galvanized.
2. Flange for flush mounting.
3. Checkered cover with neoprene gasket, pry bar slots, and stainless steel screws.
4. UL listed.
5. Drilled and tapped holes.

6. Watertight NEMA 4 Classification.

E. Large Pull and Junction Boxes (100 cubic inches and larger):
   1. Located in offices and other dry architecturally finished areas:
      a. NEMA 1 gasketed without knockouts.
      b. Located in general use areas:
      c. NEMA 12 construction:
         1) Welded steel.
         2) Furnished with gray enamel inside and out over phosphatized surfaces.

F. Located in wet and corrosive areas:
   1. NEMA 4X with stainless steel screws.
   2. Type 304 L welded stainless steel:

G. Constructed of 14 gauge steel with seams continuously welded, ground smooth, no knockouts.

H. Rolled lip around all sides.

I. Rigid handles for covers larger than 9 sq. ft. or heavier than 25 lbs.

J. Split covers when heavier than 25lbs.

K. Terminal Boxes:
   1. Galvanized 16 gauge steel box provided with plain blank screw cover, subpanel, and terminal points.
   2. Refer to Drawing for dimensions and number of terminals.
   3. Terminal blocks shall be screw-post barrier-type, white center marker strip.
   4. Rated 20 ampere, minimum 600 V.

L. Fiberglass Cable-Pulling Enclosure:
   1. Use: Access points to facilitate pulling of electrical cables in buried conduit runs.
   2. Size and quantity: As shown on Drawings.
   3. Type: Rectangular fiberglass composite, suitable for direct burial pedestrian traffic on top, -50° F, chemical, sunlight, and weather resistant.
   4. Provide matching top with "ELECTRIC" logo.

M. Outlet Boxes:
   1. Use extension and plaster rings where required.
      a. Provide grounding screw. Use: Installation of wiring devices.
      b. Boxes for Exposed Wiring:
   2. Cadmium plated, cast, ferrous metal, with threaded hubs.
      a. Boxes for Concealed Wiring:
   3. Code gage, hot-dip galvanized steel.

4. Include bar hangers for metal stud partitions.
5. Provide barriers between switches in boxes with 277 VAC switches on opposite phases.

PART 3 - EXECUTION

3.1 INSTALLATION

A. Use locknut and bushing for boxes in non-classified areas.

B. Use cast metal boxes with threaded conduit hubs in hazardous areas.

C. Use Type FS and FD boxes in wet areas and where exposed rigid steel conduit is required.

D. Use epoxy resin coated, stainless steel, cast aluminum or fiberglass boxes for corrosive areas.

E. Use PVC coated, boxes for outdoor areas.

F. Fill unused punched-out, tapped, or threaded hub openings with insert plugs.

G. Use outlet boxes sized to accommodate quantity of conductors enclosed.

H. Use boxes sized to accommodate conduit tying into box.

I. Install pull boxes or junction boxes in conduit runs where indicated or required to facilitate pulling of wires or making connections.

J. Make covers of boxes accessible.

K. Install pull boxes or junction boxes rated for the area classification.

L. Install rigid conduit squarely into boxes which do not have hubs or are drilled and tapped.

M. Install with locknut on the outside and bushing on inside.

N. Install conduit into boxes with hubs, or that are tapped, using thread lubricant.

O. Do not use back-to-back boxes on this Project.

P. Seal all points of conduit entry into fiberglass cable-pulling enclosures for a waterproof installation.

Q. Support outlet boxes for incandescent fixtures and other ceiling-mounted devices in lay-in acoustical tile ceilings by bar hangers anchored to ceiling construction members which do not interfere with tile removal.

++ END OF SECTION ++

SECTION 16137

UNDERGROUND DUCT BANKS

PART 1 - GENERAL

1.1 DESCRIPTION

A. Scope: Provide all labor, materials, equipment and incidentals as shown on the Drawings, specified and required to furnish and install underground duct banks.

B. Coordination: Duct bank routing on the Drawings is diagrammatic. Coordinate installation with piping and other underground systems and structures and locate clear of interferences.

C. Standard conduit chairs shall be used for all conduit raceway supports.

D. Definition: A duct bank is one or more buried electrical conduits.

1.2 QUALITY ASSURANCE

A. Reference Standards: Comply with applicable provisions and recommendations of the National Electrical Code.

1.3 1.3 SUBMITTALS

A. Shop Drawings: Submit for approval the following:
   1. Layouts showing the proposed routing of duct banks and the locations of manholes, handholes and areas of reinforcement.
   2. Profiles of duct banks showing crossings with piping and other underground systems.
   3. Typical cross sections.
   4. Installation procedures.
   5. Submit for approval the following:
      a. A copy of this specification section, with addendum updates included, and all referenced and applicable sections, with addendum updates included, with each paragraph check-marked to indicate specification compliance or marked to indicate requested deviations from specification requirements. Check marks (✓) shall denote full compliance with a paragraph as a whole. If deviations from the specifications are indicated, and therefore requested by the CONTRACTOR, each deviation shall be underlined and denoted by a number in the margin to the right of the identified paragraph, referenced to a detailed written explanation of the reasons for requesting the deviation. The ENGINEER shall be the final authority for determining acceptability of requested deviations. The CONTRACTOR shall furnish equipment and/or

services as specified if an exception and/or deviation is rejected. The remaining portions of the paragraph not underlined will signify compliance on the part of the CONTRACTOR with the specifications. Failure to include a copy of the marked-up specification sections, along with justification(s) for any requested deviations to the specification requirements, with the submittal shall be sufficient cause for rejection of the entire submittal with no further consideration.

b. The CONTRACTOR shall submit the preventive maintenance information package as part of the shop drawing submittal package to the ENGINEER for review and approval. **SHOP DRAWING SUBMITTAL PACKAGE WILL NOT BE APPROVED WITHOUT ACCEPTANCE OF PREVENTIVE MAINTENANCE INFORMATION.**

B. Record Drawings: Include the actual routing of underground duct runs on Record Drawings in accordance with Section 01720, Record Documents.

PART 2 - PRODUCTS

2.1 MATERIALS

A. Duct: Schedule 40 PVC conduit and fittings in accordance with Section 16111 - Conduit.

B. Exposed: PVC Coated Galvanized Rigid Metal Conduit: PVC coated rigid metal conduit and fittings in accordance with Section 16111 - Conduit, if required.

C. Backfill: Select backfill in accordance with Section 02315, Earthwork, Excavation, and Backfill.

D. Reinforcement: In accordance with Section 03200, Concrete Reinforcement.

E. Concrete: In accordance with Section 03300, Cast-In-Place Concrete.

PART 3 - EXECUTION

3.1 INSTALLATION

A. Duct banks shall be installed as follows:
   1. For small direct burial duct banks (3 conduits or less) use of PVC coated rigid metal conduit. Concrete and reinforcement are not required. Warning tape is required.
   2. For larger duct banks, use PVC conduit, to be encasement, reinforcement and warning tape. All bends (vertical and horizontal) of 45º or more require PVC coated rigid metal conduit.

B. Excavation and backfilling required for duct bank installation.

C. All duct bank installations and penetrations through foundation walls shall be watertight and in accordance with Section 16111 - Conduit.

D. Top of duct banks shall be a minimum of 24-inches below grade, unless otherwise approved by the ENGINEER.

E. Assemble duct banks using non-magnetic saddles, spacers and separators. Position the separators to provide 3-inch minimum concrete separation between the outer surfaces of the ducts. Side forms are only required to prevent excessive widening of the duct bank where over excavation has occurred.

F. Provide a 3-inch minimum concrete covering on sides, top and bottom of concrete envelopes around conduits. Concrete covering size shall be as shown on the Drawings. Add red oxide to concrete for easy identification during subsequent excavation. The red oxide is to be added in the concrete truck prior to the concrete being placed. Red oxide concrete shall include the entire duct bank, top and bottom unless under a slab.

G. Firmly fix ducts in place during placing of concrete. Carefully place and vibrate the concrete to ensure filling of all spaces between ducts.

H. Conduits entering floor mounted equipment, such as, switchgear compartments, motor control centers, transformers shall terminate with PVC coated rigid metal conduit factory 90º elbows, RNC risers and bell ends.

I. Ductbank reinforcement:
   1. Unless otherwise shown on the Drawings, reinforce with No. 4 longitudinal steel bars placed at each corner and along each face at a maximum parallel spacing of 18-inches on centers, and No. 3 tie-bars transversely placed at 18-inch maximum longitudinal intervals. Overlap of No. 3 tie-bars shall be a minimum of 4-inches.
   2. Maintain a maximum clearance of 1-inch from bars to the edge of the concrete encasement.
   3. Install dowel reinforcement rebar where duct bank meets other concrete structures.

J. Do not backfill with material containing large rock, paving materials, cinders, large or sharply angular substances, corrosive material or other materials which can damage or contribute to corrosion of ducts or cables or prevent adequate compaction of fill.

K. Slope duct runs for drainage toward manholes and away from buildings with a slope of approximately 3-inches per 100 feet.

L. Install a bare stranded copper duct bank ground cable (#4/0 or as shown on drawings) in each duct bank envelope. Make ground electrically continuous throughout the entire duct bank system. Connect ground cable to building and station ground grid or to equipment ground buses. In addition, connect ground cable to steel conduit extensions of the underground duct system. Provide ground clamp and bonding of each steel conduit extension, where necessary to maintain continuity of the ground system. Terminate ground cable at last manhole or handhole for outlying structures.

M. After completion of the duct bank or utilizing existing ducts and prior to pulling cable, pull a mandrel, not less than 12-inches long and with a cross section approximately 1/4-inch less than the inside cross section of the duct, through each duct. Then pull a rag swab or sponge through to make certain that no particles of earth, sand or gravel have been left in the duct.

N. Pulling Rope/Tape
   1. Pulling rope or tape shall be constructed of polyester and factory lubricated. Nylon is not allowed.

O. Warning Ribbon:
   1. Over all underground duct banks and direct cables, install warning ribbon approximately 12-inches below finished grade and centered on direct buried cables, electrical ductbanks and conduits without ductbank encasement. Provide 6-inch wide, 4-mil thickness underground metallic-lined marking tape with red polyethylene film on top and with clear polyethylene film on the bottom. The tape shall be permanently imprinted with "CAUTION BURIED ELECTRIC LINE BELOW".
   2. Manufacturers: Provide one of the following:
      a. Brady "Identoline"; Services and Materials "Buried Underground Tape"
      b. Somerset (Thomas & Betts) "Protect-A-Line"

P. Plug and seal empty spare ducts entering buildings and structures. Install pulling tape in all empty spare ducts. Seal watertight all ducts in use entering buildings and structures in accordance with Section 16111 - Conduit.

++ END OF SECTION ++

SECTION 16141

WIRING DEVICES

PART 1 - GENERAL

1.1 SUMMARY

A. Section Includes:
   1. Light switches, receptacles, device plates, dimmers, plug-in strips and tele-power poles.

B. Related Sections include but are not necessarily limited to:
   1. Division 0, Bidding Requirements, Contract Forms, and Conditions of the Contract.
   2. Division 1, General Requirements.
   3. Section 01650, Commissioning and Process Start-up
   4. Section 16000, General Electrical Requirements.
   5. Section 16130, Outlet, Pull, and Junction Boxes.
   6. Section 16170, Grounding and Bonding.

1.2 QUALITY ASSURANCE

A. Referenced Standards:
   1. Refer to Section 16000, General Electrical Requirements.

1.3 SUBMITTALS

A. Shop Drawings:
   1. Refer to the Contract Documents and Section 16000, General Electrical Requirements.

B. Shop Drawings: Submit for approval the following:
   1. A copy of this specification section, with addendum updates included, and all referenced and applicable sections, with addendum updates included, with each paragraph check-marked to indicate specification compliance or marked to indicate requested deviations from specification requirements. Check marks (✓) shall denote full compliance with a paragraph as a whole. If deviations from the specifications are indicated, and therefore requested by the CONTRACTOR, each deviation shall be underlined and denoted by a number in the margin to the right of the identified paragraph, referenced to a detailed written explanation of the reasons for requesting the deviation. The ENGINEER shall be the final authority for determining acceptability of requested deviations. The CONTRACTOR shall furnish equipment and/or services as specified

if an exception and/or deviation is rejected. The remaining portions of the paragraph not underlined will signify compliance on the part of the CONTRACTOR with the specifications. Failure to include a copy of the marked-up specification sections, along with justification(s) for any requested deviations to the specification requirements, with the submittal shall be sufficient cause for rejection of the entire submittal with no further consideration.

a. The CONTRACTOR shall submit the preventive maintenance information package as part of the shop drawing submittal package to the ENGINEER for review and approval. **SHOP DRAWING SUBMITTAL PACKAGE WILL NOT BE APPROVED WITHOUT ACCEPTANCE OF PREVENTIVE MAINTENANCE INFORMATION.**

PART 2 - PRODUCTS

2.1 ACCEPTABLE MANUFACTURERS

A. Subject to compliance with the Contract Documents, the following manufacturers are acceptable:
   1. Light Switches (except explosion proof):
      a. Hubbell.
      b. Slater.
      c. P&S.
      d. Arrow Hart.
      e. General Electric.
      f. Leviton.
   2. Explosion-Proof Light Switches:
      a. Crouse-Hinds.
      b. Appleton Electric Co.
      c. Killark.
      d. Door Switches:
      e. General Electric.
      f. Slater.
      g. P&S.
      h. Arrow Hart.
      i. Micro-switch.
   3. Receptacles (except explosion proof):
      a. Hubbell.
      b. Slater.
      c. P&S.
      d. Arrow Hart.
      e. General Electric.
      f. Leviton.
   4. Explosion-Proof Receptacles:

a. Crouse-Hinds.
b. Appleton Electric Co.
c. Killark.

5. Welding Receptacles:
   a. Crouse-Hinds.
   b. Appleton Electric Co.
6. Tele-power Poles:
   a. Wiremold.
   b. Walker.
7. Dimmers:
   a. Lutron.
   b. General Electric.
   c. P&S.
8. Plug-in Strip:
   a. Wiremold.
   b. Walker.

B. Submit requests for substitution in accordance with the General Conditions.

2.2 MATERIALS

A. Light Switches for Unclassified Areas:
   1. Toggle type, quiet action, specification grade with grounding terminal.
   2. Back and side wired.
   3. Solid silver cadmium oxide contacts.
   4. One-piece switch arm rated 20 A, 120/277 VAC.
   5. UL listed.
   6. Color: Ivory.
   7. Wall plate: Type 304 stainless steel.
   8. Type: As indicated on Drawings.

B. Receptacles for Unclassified Areas:
   1. Straight blade, grounding type, specification grade.
   2. Back and side wired with wrap-around bridge.
   3. Rated 20 A, 125 VAC.
   4. UL listed.
   5. Color:
      a. For use on normal power: Ivory.
      b. For use on UPS systems: Red.
      c. For use on isolated ground systems: Orange.
   6. Wall plate: Type 304 stainless steel.
   7. Type: As indicated on Drawings.

C. Light Switches for Wet Areas:

1. Presswitch type, quiet action, specification grade, with grounding terminal.
2. Back and side wired.
3. Solid silver cadmium oxide contacts.
4. One-piece switch arm rated 20 A, 120/277 VAC.
5. UL listed.
6. Color: Ivory.
7. Wall plate: Gray weatherproof presswitch type.
8. Type: As indicated on Drawings.

D. Receptacles for Wet Areas:
1. Straight blade, grounding type, specification grade.
2. Back and side wired with wrap around bridge.
3. Rated 20 A, 125 VAC.
4. UL listed.
5. Color: Ivory.
6. Wall Plate: Weatherproof, cast aluminum, UL listed, WDL open and closed.
7. Type: Weather Resistant, as indicated on Drawings.

E. Ground Fault Circuit Interrupter Receptacles:
1. Straight blade, grounding type, specification grade.
2. Rated 20 A, 125 VAC.
3. UL listed.
4. Test and reset buttons.
5. Wall plate: Indoor or Weather Resistant as required.
6. Feed-through type.

F. Light Switches for Corrosive Areas:
1. Corrosion-resistant NEMA 4X enclosure with switch consisting of:
   a. NEMA 4X Stainless Steel enclosure.
   b. Stainless Steel gasketed wall plate with built-in toggle lever switch with stainless steel shaft.
   c. Grounding bushing.
   d. Rated 20 A, 125 VAC.
   e. UL listed.
   f. Type: As indicated on Drawings.
   g. Color: Yellow.
2. Optional: Corrosion-resistant enclosure and switch consisting of:
   a. Cast copper-free aluminum "FS" or "FD" ridge type hub box.
   b. Toggle type, quiet action, specification grade with grounding terminal.
   c. Rated 20 A, 125 VAC with solid silver cadmium oxide contacts.
   d. UL listed.
   e. Neoprene gasket.

f. Cast aluminum cover with stainless steel screws and lever to activate switch.
g. Type: As indicated on Drawings.
h. Color: Yellow.

G. Receptacles for Corrosive Areas:
1. Corrosion-resistant straight blade, grounding type, specification grade.
2. Back and side wired with wrap-around bridge.
3. Rated 20 A, 125 VAC.
4. UL listed.
5. Color: Yellow.
6. Box: "FS" or "FD" ridge type cast hub box of copper-free aluminum.
7. Gasket: Neoprene.
8. Wall plate: Weatherproof, cast aluminum, UL listed, WDL open or closed.
9. Type: As indicated on Drawings.

H. Explosion-proof Light Switches for Use in Hazardous Areas:
1. Explosion-proof, UL listed for Class I, Division 1 and 2, Groups B, C, and D; and Class II, Division 1 and 2 areas, Groups E, F, and G.
2. EDS factory sealed.
3. Malleable iron body and cover.
4. Aluminum sealing chamber.
5. Front operated handle with stainless steel shaft.
6. Rated 20 A, 125 VAC.
7. With grounding screw.
8. Type: As indicated on Drawings.

I. Explosion proof Receptacles for Use in Hazardous Areas:
1. Explosion-proof, UL listed for Class I, Division 1 and 2, Groups B, C, and D; and Class II, Division 1 and 2, Groups F and G.
2. Factory-sealed malleable iron receptacle with spring-loaded cover.
3. Malleable iron mounting box.
4. Rated 20 A, 125 VAC.
5. "Dead-front" construction requiring plug to be inserted and rotated to activate receptacle.
6. Type: As indicated on Drawings.

J. Welding Receptacles:
1. 60 A, 480 VAC, 3-pole, 4-wire, grounding type.

K. Plug-In Strip: Surface steel raceway plug-in strip with single 15 A, 125 VAC, 3-wire grounding-type receptacles spaced 18-inch on center.
1. Prewired with two #12 TW and one #12 TW green insulated ground.
2. Minimum 1-1/4-inch wide by 3/4-inch deep.

3. Suitable fittings and snap-in cover.
4. Finish:
    a. Stainless steel.
5. Receptacle Color:
    a. For use on normal power: Ivory.
    b. For use on UPS systems: Red.
    c. For use on isolated ground systems: Orange.

PART 3 - EXECUTION

3.1 INSTALLATION

A. Mount devices where indicated on the Drawings and as scheduled in Section 16010, Electrical: Basic Requirements.

B. Surface-mount receptacles and light switches in concrete construction.

C. In masonry and metal stud construction, recess-mount receptacles and light switches unless device precludes recessed mounting or unless otherwise noted on the Drawings.

D. Where more than one receptacle is installed in a room, they shall be symmetrically arranged.

E. Set switches and receptacles plumb and vertical to the floor.

F. Set recess-mounted switches and receptacles flush with face of walls.

G. Do not connect dimmers to loads in excess of 80% of the rating of the dimmer.

H. Provide blank plates for empty outlets.

++ END OF SECTION ++

SECTION 16142

WEATHERPROOF WHILE IN USE OUTLET ENCLOSURES

PART 1 - GENERAL

1.1 SCOPE OF WORK

A. These Specifications encompass outlet enclosures used on outlet devices where outlets are required to be weatherproof and/or physically protected while in use or idle.

B. These safety outlet enclosures shall be used in locations where attachment plugs will be connected permanently, or for an indefinite period of time, in potentially wet or weather exposed environments.

C. They are also to be used where outlets are subject to contamination, corrosion, or damage.

1.2 DESCRIPTION

A. The safety outlet enclosure shall consist of a suitable style outlet/receptacle plate with a hinged safety cover.

B. The safety outlet enclosure shall have cord port(s) capable of allowing an appropriate size electrical cord(s) to pass through when safety cover is closed.

C. The safety outlet enclosure shall have a latching mechanism to allow the enclosure to maintain weatherproof integrity. The latch shall be a tamper resistant (locking/security) style in areas where security is needed.

D. The safety outlet enclosure shall be sufficient depth to allow full closure with attachment plug(s) in use.

1.3 SUBMITTALS

A. Products shall be submitted in accordance with Section 16000, General Electrical Requirements, and the Contract Documents, prior to installation.

B. Shop Drawings: Submit for approval the following:
   1. A copy of this specification section, with addendum updates included, and all referenced and applicable sections, with addendum updates included, with each paragraph check-marked to indicate specification compliance or marked to indicate requested deviations from specification requirements. Check marks (✓) shall denote full compliance with a paragraph as a whole. If deviations from the specifications are indicated, and therefore requested by

the CONTRACTOR, each deviation shall be underlined and denoted by a number in the margin to the right of the identified paragraph, referenced to a detailed written explanation of the reasons for requesting the deviation. The ENGINEER shall be the final authority for determining acceptability of requested deviations. The CONTRACTOR shall furnish equipment and/or services as specified if an exception and/or deviation is rejected. The remaining portions of the paragraph not underlined will signify compliance on the part of the CONTRACTOR with the specifications. Failure to include a copy of the marked-up specification sections, along with justification(s) for any requested deviations to the specification requirements, with the submittal shall be sufficient cause for rejection of the entire submittal with no further consideration.

2. The CONTRACTOR shall submit the preventive maintenance information package as part of the shop drawing submittal package to the ENGINEER for review and approval. **SHOP DRAWING SUBMITTAL PACKAGE WILL NOT BE APPROVED WITHOUT ACCEPTANCE OF PREVENTIVE MAINTENANCE INFORMATION.**

1.4 MANUFACTURER

A. Manufacturer shall be Taymac Corporation, or equal.

PART 2 - PRODUCTS

2.1 WEATHERPROOF WHILE IN USE OUTLET ENCLOSURES

A. The enclosures shall be used in outdoor locations, where attachment plugs will be connected permanently, or for an indefinite period of time, in potentially wet or weather exposed environments, or as indicated on the Drawings.

B. They are also to be used where outlets are subject to contamination, corrosion, or damage.

C. The enclosure shall consist of a suitable style outlet/receptacle plate with a hinged safety cover, and shall be of sufficient depth to allow full closure with attachment plugs in use.

D. The enclosure shall have cord ports capable of allowing the appropriate size electrical cords to pass through when safety cover is closed.

E. The enclosure shall have a latching mechanism to allow the enclosure to maintain weatherproof integrity. The latch shall be a tamper resistant, and locking style, in areas where security is needed, as shown on the Drawings.

F. The enclosure shall be Underwriters Laboratories (UL) listed per UL Standard 514C for non-metallic boxes, flush device boxes and enclosures, and conform to

National Electric Code (NEC), Article 406.8 Paragraphs a and b, Article 110.3 and Article 110.11, pertaining to damp, wet or possible corrosive installations.

G. Body materials shall be of a flame resistant, self extinguishing, ultraviolet inhibiting, impact resistant, polycarbonate resin such as GE Lexan 943A, or Mobay Makrolon 6457. Material must meet UL Standard 94.

H. Gasket materials shall be of sufficient thickness to form a weatherproof seal under normal mounting conditions. Thicknesses; 3/16-inch for base plate and 1/8-inch for covers. Material is to be closed cell neoprene foam by Monarch Rubber A5032, or equivalent, self extinguishing and flame retardant. Material must meet UL Standard 94 HF1.

I. Mounting hardware shall be stainless steel, and of sufficient length to properly secure the device, and ensure seal to mounting surface.

J. The enclosures shall be installed over a weatherproof box and outlet in conformance with the manufacturer's instruction. Cover shall be mounted to insure that access holes for the portable line cords will be located at the lower end of the cover.

PART 3 - EXECUTION

3.1 INSTALLATION

A. Equipment shall be installed in accordance with the manufacturer's recommendations.

++ END OF SECTION ++

SECTION 16143

TERMINAL BLOCKS

****NTS: THIS SPECIFICATION IS NOT NEEDED FOR TERMINAL BLOCKS IN CONTROL PANELS.

PART 1 - GENERAL

1.1 SCOPE OF WORK

A. This Section covers terminal blocks for control and other wiring.

1.2 SUBMITTALS

A. Products shall be submitted in accordance with Section 16000, General Electrical Requirements, and elsewhere in the Contract Documents, prior to installation.

1.3 MANUFACTURERS

A. Terminal blocks shall be Entrelec, Phoenix Contact, Allen-Bradley, or equal.

B. Surge protection blocks shall be Phoenix Contact, Terminal or equal.

C. Power distribution blocks shall be Gould, Allen-Bradley Corporation, or equal.

PART 2 - PRODUCTS

2.1 TERMINAL BLOCKS

A. Terminal blocks shall mount on standard DIN rail, and be of the size required for conductors therein. A minimum of 25% spares shall be provided in each terminal box. No more than two conductors shall be allowed per termination. Jumper bar assemblies shall be installed for interconnecting terminal blocks, distributing power, and signal commons. Terminal blocks shall be UL rated for 600 volts and 30 amps, minimum.

B. Grounding terminal blocks shall be provided for instrumentation cable shields. The terminal blocks shall have distinctive two-color bodies, and shall be mounted to the DIN rail with metal screw down type clamps, providing a positive ground connection. One grounding terminal block shall be installed for every two instrument cables terminated. Grounding terminal blocks shall be UL rated for 600 volts, and 20 amps, minimum.

C. Terminal blocks shall be available in a variety of colors, including red, green, blue, gray, black, yellow, and orange.

D. DIN mount fuse holders shall have blown fuse indicators for DC and AC circuits. Fuse holders shall be of the compression clamp type. Fuse holders shall be UL listed and rated for 600 volts. Fuse sizes shall not exceed the UL current rating for the fuse holders.

E. DIN rail shall be prepunched, zinc bichromate plated steel. Symmetrical DIN rail shall be 35mm by 7.5mm, minimum.

F. Terminal blocks for 4 to 20 milliamp signals shall have knife disconnect switches, and accessible test points for testing and measurement of current loop signals, without the need for removing wire terminations.

2.2 SURGE PROTECTION BLOCKS (SPB)

A. Analog inputs and outputs shall be terminated at surge protection blocks (SPB). The SPBs shall be designed for a working voltage of 32 volts, and shall be fused

B. with separate terminal blocks.

C. SPBs shall provide full hybrid line to line protection, and shall have a GDT rating of 10,000 A (8/20µs pulse waveform).

D. SPBs shall be UL94 V-2 listed.

2.3 POWER DISTRIBUTION BLOCKS (PDB)

A. PDBs shall be electro-tin plated and manufactured from high strength 6061-T6 aluminum alloy.

B. PDBs shall be UL Recognized rated 90º C and CSA Certified.

C. PDBs shall provide flexibility in using the connector as an in line splice or to reduce conductor size.

D. PDBs shall be rated for 600 volts and dual rated for copper and aluminum conductor.

E. PDBs shall have the sizes and ratings as shown on the Drawings.

PART 3 - EXECUTION

3.1 INSTALLATION

A. Each terminal block and fuse holder shall be identified with the circuit number, or conductor number, corresponding to the identification appearing on the Shop Drawings for the equipment or system.

B. Terminal block and fuse holder markers shall be computer printed plastic-type, with permanent markings.

C. End clamps and end sections shall be installed on each terminal block and fuse holder assembly.

D. Terminal blocks for DC voltages shall be blue and AC voltages shall be gray.

++ END OF SECTION ++

SECTION 16160

ENCLOSURES

PART 1 - GENERAL

1.1 SCOPE OF WORK

A. This Specification includes enclosures to house electrical controls, instruments, terminal blocks, and serve a junction boxes where shown on the Drawings.

1.2 SUBMITTALS

A. Products shall be submitted in accordance with Section 16000, General Electrical Requirements, and elsewhere in the Contract Documents, prior to installation.

B. Shop Drawings: Submit for approval the following:
   1. A copy of this specification section, with addendum updates included, and all referenced and applicable sections, with addendum updates included, with each paragraph check-marked to indicate specification compliance or marked to indicate requested deviations from specification requirements. Check marks (✓) shall denote full compliance with a paragraph as a whole. If deviations from the specifications are indicated, and therefore requested by the CONTRACTOR, each deviation shall be underlined and denoted by a number in the margin to the right of the identified paragraph, referenced to a detailed written explanation of the reasons for requesting the deviation. The ENGINEER shall be the final authority for determining acceptability of requested deviations. The CONTRACTOR shall furnish equipment and/or services as specified if an exception and/or deviation is rejected. The remaining portions of the paragraph not underlined will signify compliance on the part of the CONTRACTOR with the specifications. Failure to include a copy of the marked-up specification sections, along with justification(s) for any requested deviations to the specification requirements, with the submittal shall be sufficient cause for rejection of the entire submittal with no further consideration.
   2. The CONTRACTOR shall submit the preventive maintenance information package as part of the shop drawing submittal package to the ENGINEER for review and approval. **SHOP DRAWING SUBMITTAL PACKAGE WILL NOT BE APPROVED WITHOUT ACCEPTANCE OF PREVENTIVE MAINTENANCE INFORMATION.**

1.3 MANUFACTURERS

A. Enclosures shall be manufactured by Hammond, Hoffman, Rittal, or equal.

PART 2 - PRODUCTS

2.1 STEEL

A. Enclosures shall be fabricated from stainless steel with seams that are continuously welded. Doors shall have full length piano hinges with the door removable by pulling the hinge pin.

B. A rolled lip shall be provided around three sides of the door and around all sides of the enclosure opening. The gasket shall be attached with oil-resistant adhesive and held in place with steel retaining strips. Exterior hardware, such as clamps, screws, and hinge pins, shall be of stainless steel for outdoor installations. A hasp and staple shall be provided for padlocking. Each enclosure shall have a print pocket. All wires entering or leaving the enclosure shall terminate on terminal strips. All wires and terminals shall be clearly identified as specified elsewhere in these Specifications.

C. Finish shall be white enamel interior, light gray enamel, ANSI 61 exterior, over phosphatized surfaces. Special finishes and colors shall be furnished for wet locations. Drawings should be checked for special conditions.

2.2 NEMA RATING

A. Unless otherwise indicated on the Drawings, enclosures shall be NEMA 12 for indoors and NEMA 4X for corrosive areas and outdoor installations. NEMA 4X enclosures shall be 316 stainless steel, unless noted otherwise. NEMA 4X enclosures shall also be used in wet or wash down areas.

B. Hazardous locations as indicated on plans shall be Nema 7.

PART 3 - EXECUTION

3.1 INSTALLATION

A. Enclosures shall be installed as indicated on the Drawings and according to manufacturer's instructions.

B. Enclosures shall be properly grounded and shall include ground straps connected to hinged doors and accessories.

++ END OF SECTION ++

SECTION 16161

CONTROL PANELS

PART 1 - GENERAL

1.1 SCOPE

A. Contract Documents illustrate and specify functional and general construction requirements of the panel components and do not necessarily show or specify all components, wiring, and accessories required for a completely integrated system.

B. Provide all labor, materials, equipment, documentation including drawings and incidentals as shown on the Drawings, specified and required to design, furnish, install, calibrate, test, start-up, program, configure, commission and place into satisfactory operation all panels, intermediate termination panels and/or enclosures including panel components and instruments.

C. Conform the design and construction of panels to the specifications herein.

D. For vendor packages, markup this specification for proposed control panel components against the relevant sub-section.

1.2 COORDINATION

A. Coordinate the installation of all items specified herein and required to ensure the complete and proper interfacing of all the components and systems.

B. All control loops to function as described in Section 17, Control Descriptions and depicted on the CONTRACT DRAWINGS.

1.3 DEFINITIONS

A. Intermediate Termination Panel (ITP): An Intermediate Termination Panel is any junction box that has terminals to terminate wires and no electrical or electronic powered devices. These panels act as interim termination points for field wiring to be connected to the control systems equipment. Please note that junction boxes and pull boxes are different. ITP's are sometimes referred to as junction boxes. However, pull boxes are not allowed to have any wire splicing devices, including terminal blocks.

B. Local Control Panel (LCP): A Local Control Panel is an industrial piece of equipment that contains electrical or electronic devices, in addition to wire terminals. Typically, it is a local panel connected to a specific piece of equipment to provide control and/or monitoring of that equipment. A local control panel contains voltages of 120VAC or below.

C. Motor Control Panel (MCP): A Motor Control Panel is an industrial piece of equipment that houses components for the power distribution and starting of motors. The components may include motor starters and variable frequency drives.

1.4 QUALITY ASSURANCE

A. Reference Standards: Construction of panels and the installation and interconnection of all equipment and devices mounted within also comply with applicable provisions of the following, except where otherwise shown or specified.
   1. National Fire Protection Association 79
   2. National Electrical Code (NEC) current adoption.
   3. National Electrical Manufacturer's Association Standards (NEMA).
   4. American Society for Testing and Materials (ASTM).
   5. Operational Safety and Health Administration (OSHA) Regulations.
   6. State and local code requirements.
   7. Where any conflict arises between codes or standards, the more stringent requirement applies.
   8. All panel devices shall bear the label of the Underwriters' Laboratory (UL), Inc. or be UL Recognized. Some products certified by UL are components that are intended to be used in the manufacture of a complete listed product. These components cannot bear the UL symbol, but may use a special Recognized Component Mark.
      a. The UL/UR listed number shall be documented on the Bill of Materials on the drawings.
   9. The assembled LCP's and MCP's are to be conformed to meet UL 508A requirements and labeling.

B. Panel to be designed, schematics drawn and assembled by the manufacturer. Utilize one of the following Panel Manufacturers:
   1. Zak Controls, 4970 East Beverly Rd., Phoenix AZ 85044 – (602) 267-0100.
   2. RDC Electrical, 3411 South 44th St., Phoenix, AZ 85308 – (602) 437-0760.
   3. Keller Electrical Industries, Inc., 1881 East University Dr., Phoenix AZ 85034 (602) 437-3015.
   4. Vertech Industrial Systems, 4409 East Baseline Rd., Phoenix, AZ 85042, Tel: (480) 756-2300.
   5. Prime Controls LP, 1515 W University Dr #104, Tempe, AZ 85281, Tel: (480)-781-0220

1.5 SUBMITTALS

A. General:
   1. Reference Section 01330, Submittals Procedures.
   2. Panels shall be furnished in accordance with the requirements as shown on the Drawings, and as specified in Division 16, Section 16050 and Division 17000, Sections 17456, 17453, 17460 and 1761.

3. Generate drawing package utilizing AutoCAD versions 2004 through 2015. If utilizing a newer AutoCAD version, submit files saved at version 2015.
4. Drawing package shall contain complete wiring and schematic diagrams, control diagrams loop drawings, a complete Bill of Material, and any other details required to demonstrate that the system has been coordinated and will properly function as a unit. Drawings shall show proposed layout, anchorage, support and appurtenances of equipment and equipment relationship to other parts of the work including clearances for maintenance and operations.
5. Submit legible hard copies of the panel drawing package printed on 11" x 17" sheets.
6. Submit manufacturer's technical data sheets and product literature for the panel and all components utilized. Cleary identify exact equipment and material that is being supplied on the manufacturer's data sheets.
7. Submit a sample nameplate with the submittal.
8. Identify general location of all conduit entry points on the Front Elevation drawing of the documentation package.
9. Submit calculations and recommended cooling and heating load requirements.
10. Utilize the Hoffman Temperature Calculation tool at: http://www.hoffmanonline.com/product_catalog/tools/index.aspx?cat_1=34&cat _2=375&SelectCatID=375&CatId=375.
11. Submit location and tube routing details for air conditioner drain line. Coordinate drain location with ENGINEER.

B. Shop Drawings: Submit for approval the following:
1. A copy of this specification section, with addendum updates included, and all referenced and applicable sections, with addendum updates included, with each paragraph check-marked to indicate specification compliance or marked to indicate requested deviations from specification requirements. Check marks (✓) shall denote full compliance with a paragraph as a whole. If deviations from the specifications are indicated, and therefore requested by the CONTRACTOR, each deviation shall be underlined and denoted by a number in the margin to the right of the identified paragraph, referenced to a detailed written explanation of the reasons for requesting the deviation. The ENGINEER shall be the final authority for determining acceptability of requested deviations. The CONTRACTOR shall furnish equipment and/or services as specified if an exception and/or deviation is rejected. The remaining portions of the paragraph not underlined will signify compliance on the part of the CONTRACTOR with the specifications. Failure to include a copy of the marked-up specification sections, along with justification(s) for any requested deviations to the specification requirements, with the submittal shall be sufficient cause for rejection of the entire submittal with no further consideration.
2. The CONTRACTOR shall submit the preventive maintenance information package as part of the shop drawing submittal package to the ENGINEER for review and approval. **SHOP DRAWING SUBMITTAL PACKAGE WILL**

NOT BE APPROVED WITHOUT ACCEPTANCE OF PREVENTIVE MAINTENANCE INFORMATION.

1.6 O&M MANUALS

A. Comply with the requirements of Section 01730, Operation and Maintenance Data.

B. Provide an electronic copy of the panel drawing package on a separate CD. Panel Drawings are to be provided electronically in AutoCAD version 2004 through 2015. If utilizing a newer AutoCAD version, submit files saved at version 2015.

1.7 PRODUCT DELIVERY, STORAGE AND HANDLING

A. Comply with manufacturers requirements for Transportation and Handling of Materials and Equipment.

B. Comply with manufacturers requirements for Storage of Materials and Equipment.

C. Provide a hard copy of the panel drawings, size 11" x 17", inside the panel upon delivery.

PART 2 - PRODUCTS

2.1 PANEL ENCLOSURES

A. General:
   1. Conform panels and enclosures to the NEMA requirements as stated in Specification 16160, Enclosures.
   2. All outdoor panels shall be provided with sunshade structures. Sunshade structures shall be constructed as shown on CONTRACT DRAWINGS.
   3. Sizes shown on contract drawings are estimates. Furnish panels and enclosures sized to house all equipment, instruments, front panel mounted devices, power supplies, power distribution panels, wiring and other components installed within.
   4. Size the panel to provide 20% spare free space capacity.
   5. Use stainless steel fasteners throughout.
   6. Provide interior mounting panels and shelves constructed of minimum 12 gage steel.
   7. Provide 12"x12' print pocket in panels with a 24" or larger door. Mount on inside door where no door mounted devices are located. If there is not enough room for a 12"x12" print pocket, provide a sized pocket to fit available room.
   8. Provide enclosure mounting supports as required for floor, frame, or wall mounting. Indoor wall mount panels utilizing stainless steel unistrut. Outdoor wall mount panels utilizing PVC-coated Unistrut.

B. Construction Features:

1. General Construction Features - Provide the following convenience accessories inside of each panel.
    a. One or more 120 VAC light fixtures with a minimum 40 watt lamp or LEDs with a snap switch for on/off control.
    b. Provide grounding studs or lugs for metal panels and doors.
    c. Provide all electrical components and devices, support hardware, fasteners, and interconnecting wiring required to make the panels and/or enclosures complete and operational.
    d. Provide oil resistant gasket completely around each door or opening.
    e. For panels located in the field or outdoors that have door mounted devices which do not meet the NEMA rating for the area, provide a window kit that includes a hinged door with a clear plastic window and an oil resistant gasket to encompass all non-NEMA rated panel instruments for this area.
    f. Provide full height doors.
    g. Provide panels with no extra holes or knockouts unless shown on Contract DRAWINGS.

C. Environment:
    1. General:
        a. Provide the following panel(s) with an air conditioner, heat exchanger or ventilation fan based on the submitted calculations for cooling and/or heating load requirements.
            1) As Required by cooling and/or heating calculations.
        b. Provide a heater for all panels located outdoors to maintain a minimum temperature of 68°F.
        c. Provide a separate supplementary protector for the cooling or heating equipment.
        d. Provide thermostats to automatically control heating and cooling requirements.
        e. Provide a high temperature switch, for alarm purposes, in all panels that require air conditioners, heat exchangers or ventilation fans. The contact shall be wired to alarm to the Process Control Information System.
            1) Products and Manufacturers:
                a) Hoffman ATEMNC.
                b) Or Equal.
    2. Air Conditioner:
        a. Coordinate utilization of air conditioners with the ENGINEER.
        b. Provide an automatically controlled closed loop air conditioner with filtered and adjustable air louvers to maintain temperature inside each enclosure below the maximum operating temperature rating of the lowest rated component.
        c. Provide a condensation drain line for each air conditioner.
        d. Coordinate space requirements for maintenance.
        e. Provide NEMA 4X for outdoor locations.
        f. Coat heating and cooling elements including external housing that are in contact with Plant’s ambient environment with Heresite, or equal, for

protection from hydrogen sulfide corrosion with hydrogen sulfide levels up to seven ppm.
1) Coordinate application of coating with the ENGINEER.

g. Product and Manufacturer:
1) Hoffman (McClean).

3. Heat Exchanger:
a. Coordinate utilization of heat exchangers with the ENGINEER.
b. Provide an automatically controlled heat exchanger to maintain temperature inside each enclosure below the maximum operating temperature rating of the lowest rated component.
c. Coordinate space requirements for maintenance.
d. Products and Manufacturers: 1) Hoffman.

4. Ventilation Fan:
a. Coordinate utilization of ventilation fans with the ENGINEER.
b. Provide automatically controlled ventilation fans with filter to maintain temperature of indoor enclosures below the maximum operating temperature of the lowest rated component.
c. Products and Manufacturers: 1) Hoffman. 2) Or Equal.

5. Heater:
a. Provide adequately sized automatically controlled 120 VAC heaters to maintain temperature inside each enclosure above 40°F to a maximum of 80°F when the outside temperature is 0°F through 40°F.
b. Maintain a minimum four inch clearance or minimum clearance recommendations from the manufacturers from any device.
c. Product and Manufacturer: 1) Hoffman. 2) Or Equal.

D. Identification:
1. Provide laminated plastic nameplates with a white background and black lettering for identification of panels and components.
2. Construct nameplates with 1/16” plastic and with beveled edges.
3. Nameplate Mounting:
a. Indoor panels: Mount nameplates to the panel utilizing glue.
b. Outdoor panels: Mount nameplates to the panel utilizing glue and with two self-sealing ¼” stainless steel screws by APM Hexseal.
c. Glue Product and Manufacturer:
1) Gorilla Glue.
2) Or Equal.

3) Provide nameplates according to Table 2.1.C.5 and Section 3.1.B:

Nameplate Specifications			
Type	**Size**	**Font**	**Font Size**
Manufacturer Nameplate	*1½" x 6"	Arial	1/8"
Panel Nameplate	*2" x 7"	Arial	1/2"
Device Nameplate	*1½"x 2½"	Arial	3/16"

Table 2.1.C.5 Nameplate Specifications

* This is a minimum height size requirement. Size nameplates large enough to display the information required to clearly identify the panel.

2.2 PANEL DEVICES

A. General:
   1. Provide DIN rail mounted devices where practical.
   2. All devices mounted on the exterior of the panel shall match the NEMA rating of the panel.

B. Internal Component Labeling:
   1. Provide a device label for devices mounted inside the panel that conforms to the criteria below:
      a. Instruments: Provide label with the instrument loop number as shown on the CONTRACT DRAWINGS. Place label below the instrument on the backplane.
      b. Supplementary Protector: Label each supplementary protector with CB and the number assigned in the supplementary protector schedule. Place label on the backplane.
      c. Fuses: Label each fuse with FU and the number assigned in the fuse schedule. Place a label on the backplane that includes the fuse number and the fuse size.
      d. Control Relays: Label each relay with CR and the number assigned in the panel drawings. Place label below the relay on the backplane.

e. Terminal Strips: Label each terminal strip with the terminal strip type. (ex. TB1, TB2, ATB). Place label above the terminal block or at first terminal on the backplane.
f. Door Mounted Devices: Provide a label on the interior of the front panel door for every panel device. The label should contain the same information as shown on the front panel nameplate. Place the label below the device.
g. Wireway Covers: Label wireways with the voltage that is being routed through it. For example; "24 VDC" for DC voltage or "120VAC" for AC voltage. Place label on wireway cover. Coordinate label size to fit on wireway cover.
h. Identify internal components with permanent adhesive plastic labels.
    1) Product and Manufacturer:
        a) Brady USA Inc.
        b) Or Equal.
    2) Provide device label size and fonts per Table 2.2.B.1:

Device	Label Size	Font Size	# Points	Brady Part #
(Wireways) 24VDC	1"x 4"	Arial	48 Points	PTL-42-422
(Wireways) 120VAC	1"x 4"	Arial	48 Points	PTL-42-422
Misc. Device Labels	1"x 1"	Arial	16 Points	PTL-19-423
Panel Door Devices	1" x 1.5"	Arial	8 Points	PTL-31-423

Table 2.2.B.1 Panel Interior Device Label

C. DIN Rail:
1. General: DIN rail is the metal rail used to mount various electrical components in a panel.
2. Mount all internal components on DIN Rail.
3. DIN Rail for terminal blocks shall be raised DIN rail to match the height of the wireways.
4. Product and Manufacturer, Provide one of the following:
    a. Phoenix Contact.
    b. Or Equal.

D. Control Circuit – Supplementary Protectors:
1. Provide single pole supplementary circuit protectors with the following features, 120 Volt AC, DIN rail mounted and UL 1099 listed with auxiliary contacts.
2. Provide end caps, marking strips, insulated side jumpers and other accessories.
3. Product and Manufacturer, Provide one of the following models where "xx" is the appropriate rating.

a. Phoenix Contact, TMC 1-M1-xxA.
b. Allen-Bradley, 1492-SP1Bxxx.
c. Idec, NRC-11-0-L-xxA-AA.

E. Air Conditioner or Heater Supplementary Protectors:
1. Provide supplementary protectors with the following features, 120 Volt AC, DIN rail mounted and UL 489 listed with auxiliary contacts.
2. Product and Manufacturer, Provide one of the following:
a. Allen-Bradley, Bulletin 1489.
b. Or Equal.

F. Control Relays:
1. Type: General purpose, plug-in socket base type rated for continuous duty.
2. Construction Features:
a. Coil Voltages: 120 VAC.
b. Contacts:
1) Silver cadmium oxide rated not less than ten amperes resistive at 120 VAC or 28 VDC continuous.
2) For switching low energy circuits (less than 200 ma) fine silver, gold flashed contacts rated not less than three amperes resistive at 120 VAC or 28 VDC continuous shall be provided.
3) Number of contacts:
a) Minimum: Two double pole/double throw contact sets
b) Maximum: Four double pole/double throw contact sets.
c) Socket type to be blade.
d) Relay Enclosure: Dust-proof plastic enclosure.
e) Relays shall have an LED indicating lamp to show energized state.
3. Product and Manufacturer: Provide one of the following:
a. Type R and/or Type K, as manufactured by Square D Company.
b. Type RH and/or Type RY, as manufactured by IDEC.
c. Potter & Brumfield.

G. Time Delay Relay:
1. Type: Dial adjustable, plug-in type time delay relay providing delay-on-make, delay-on-break one shots or interval operation.
2. Construction Features:
a. MOS digital circuit with transformer coupled power.
b. Switch selectable ranges.
c. Minimum Setting: Three percent of range; except 50 ms for one second range.
d. Contacts:
1) Type: DPDT.
2) Rating: Seven amps resistive at 120 VAC, seven amps at 24 VDC.
e. Housing:
1) Plug-in design with dust and moisture resistant molded plastic case.

f. Power Input: 120 VAC.

3. Product and Manufacturer: Provide one of the following:
   a. Manufactured by Automatic Timing and Controls Company.
   b. Manufactured by IDEC.

H. Selector Switches, Pushbuttons and Indicating Lights:
   1. General:
      a. Selector switches, pushbuttons and indicating lights shall be supplied by one manufacturer and be of the same series or model type.
      b. Type: 30mm, Heavy duty industrial, oil tight, corrosion resistant, with interchangeable pilot lights, plug-in construction, double break silver contacts, chrome plated lock rings, and modular contacts.
      c. Mounting: Flush mounted on panel front, unless otherwise noted.
      d. NEMA rated to match panel in which mounted.
      e. Provide individual legend plates for indication of switch, pushbutton, and light function (e.g., Open, Closed, Hand-Off-Auto). A list shall be submitted for review and approval.

I. Selector Switches:
   a. Type: Provide selector switches with number of positions as required to perform intended functions as shown on the Drawings and as specified.
   b. Contacts:
      1) Provide number and arrangement of contacts as required to perform intended functions specified, but not less than one double pole, double throw contact per switch.
      2) Type: Double break, silver contacts with movable contact blade providing scrubbing action.
      3) Rating: Compatible with AC or DC current with devices simultaneously operated by the switch contacts, but not less than ten amperes resistive at 120 volts AC or DC continuous.
   c. Switch Operator: Standard black knob.
   2. Pushbuttons (Standard or Illuminated):
      a. Momentary Type: Provide momentary, booted type pushbuttons as required to perform intended functions specified and shown on the Drawings. Boot color to be red for stop buttons and black for other functions.
         1) Provide extended head pushbuttons for all stop functions. 2) Provide flush head pushbuttons for all other functions.
      b. Maintained Type: Provide maintained, push/pull, “Mushroom” type, red in color, to perform intended functions as specified, and as shown on the drawings.
         1) Emergency Stop button shall be red and the base of the button shall be yellow.
      c. Contacts: Comply with the requirements specified for selector switches.
      d. Lock-out: Provide locking mechanism for all lock-out functions.
   3. Indicating Lights:

a. Type: Compact, integral non-transformer type.
b. Lamps: 120 VAC, high-intensity LED type (20,000 hours minimum). Indicating lights shall have clear lenses and LED lamps colored as shown on the Drawings.
c. Common, push-to-test circuitry shall be provided for each panel to simultaneously test all indicating lights on the panel using a single pushbutton when there are 10 or more lights on the panel. Control panels with less than 10 lights shall utilize individual push-to-test lights and control circuitry.
d. Button and Lamp Colors:
    1) Red for indication of open, on, or running.
    2) Green for indication of closed, off (ready), or stopped.
    3) YELLOW for indication of equipment malfunction, process trouble or alarms.
    4) White for indication of electrical control power on.

4. Rotary Cam Switches:
    a. Provide rotary cam switches with number of positions and poles as required performing the signal switching function specified and shown on the Drawings.
    b. Contacts:
        1) Gold-flashed contacts housed in mechanical contact blocks with number and arrangement of contacts as required performing intended function.
        2) Contact Rating: Compatible with AC or DC through-put current of signals and devices simultaneously operated by the switch contacts, but not less than 20 amperes at 600 VAC or 250 VDC continuous.
    c. Switch Operator: Standard black knob.
5. Product and Manufacturer: Provide one of the following:
    a. Square D.
    b. Allen-Bradley Co.
    c. Eaton.

J. Potentiometer:
1. Type: Industrial potentiometer operator, direct acting, 3/4 to full turn; and standard 3-wire potentiometer.
2. Required Features:
    a. NEMA rated to match panel in which mounted.
    b. Resistance Range: 0 to 10,000 Ohms.
    c. Resistance Element: Wire wound or conductive plastic.
    d. Power Rating: Two watts.
    e. Mounting: Flush mounted on panel front, unless otherwise noted.
    f. Provide legend plate for indication of position (0 to 100 percent).
3. Product and Manufacturer: Provide one of the following:
    a. Square D.
    b. Allen-Bradley Co.
    c. Eaton.

K. Power Supply:
   1. General:
      a. Panel power supply source, type, voltage, number of circuits and circuit ratings shall be as shown on the Contract Drawings.
      b. Panels shall be provided with an internal 120 VAC with number of circuits and separate supplementary protectors sized as required to distribute power to the panel components.

L. 24VDC Power Supplies:
   1. General:
      a. Single unit and multiple unit power supplies, located in panels, as required.
      b. Single Unit Required Features:
         1) Solid state circuitry.
         2) Surface mounting.
         3) Input Power: 120 VAC, ± 10 percent, 60 Hz.
         4) Output Power: 24 VDC or as required.
         5) Line/Load Regulation: 0.05 percent.
         6) Ripple: 0.25 mv RMS.
         7) Overload Protection: Internal preset or fused.
   2. Product and Manufacturer: Provide one of the following:
      a. Acopian Corporation.
      b. Power One.
      c. Lambda.
      d. Sola.
   3. If redundant power supplies are required: Provide one of the following:
      a. Lambda DPL-PU/E.
      b. Phoenix Contact Quint-Diode/40.
      c. Puls.
      d. Or Equal.

M. Wire:
   1. General:
      a. Provide internal wiring of Type MTW stranded copper wire with thermoplastic insulation with no nylon jacket rated for 600 V at 90°C for single conductors.
      b. No utilization of Type THHN for panel wiring.
      c. For DC panel signal wiring, use #16 AWG shielded minimum.
      d. For AC power wiring, use #14 AWG minimum. For AC signal and control wiring, use #16 AWG minimum. For wiring carrying more than 15 amps, use sizes required by NEC and NFPA 79 Standards.
      e. Identify wires at each end using heat shrink labels with permanent number codes using a Brady LS2000 Labeling System, or equal.
      f. Panels conform to the wire color code as shown in Table 2.2.K.1.f Wire Color Code and NFPA 79 Standards.
   2. Product and Manufacturer: Provide one of the following:

a. Carol.
b. Belden.
c. Anixter.

WIRE COLOR CODE TABLE (Inside Panels)			
TYPE	FUNCTION	INSULATION COLOR	WIRE SIZE
AC POWER - HOT	120VAC	**BLACK	#14
AC POWER - NEUTRAL	120VAC	WHITE	#14
AC GROUND	120VAC	GREEN	#14
AC CONTROL	120VAC	**RED	#16
ISOLATED DC GROUND	GROUND	GREEN W/YELLOW	#16
DC POWER	SOURCE	BLUE	#16
DC POWER	COMMON	WHITE /BLUE	#16
CONTROL	FOREIGN VOLTAGES	YELLOW	#16
LOW VOLTAGE AC	24 VAC SOURCE	BROWN	#16
LOW VOLTAGE AC	24 VAC COMMON	BROWN W/WHITE	#16
*AC POWER	480 VAC PHASE A	BROWN	Size to FLA
*AC POWER	480 VAC PHASE B	ORANGE	Size to FLA
*AC POWER	480 VAC PHASE C	YELLOW	Size to FLA
TEMPORARY	TEMPORARY	PURPLE	Size to FLA

Table 2.2.K.1.f Wire Color Code * - For Motor Control Panels (MCP's) that are permitted to contain 480 VAC

** - Black 120 VAC wires are hot unless powered down via supplementary circuit protector. Red 120 VAC wires are hot based on the control logic state.

N. Single Shielded Pair Cable:
   1. Tinned copper, nineteen strand, PVC insulated conductors, No. 16 AWG minimum, twisted with aluminum-polyester shield, stranded tinned 16 AWG copper drain wire and PVC black or gray outer jacket. Wire conductor colors shall be black (-neg) and red (+pos). 600 Volt Tray Cable (TC) rated.
   2. Product and Manufacturer: Provide one of the following:
      a. Belden Company (No. 9342).
      b. Okonite Company.
      c. Dekoron Wire and Cable Company.

O. Wire Terminations:
   1. Terminate all field and internal component wiring using insulated ferruled connectors attached with manufacturer's recommended tool.
   2. Excessive stripping of the wire so as to allow bare wire outside the insulated ferrule is not permitted.
   3. Utilize insulated double ferruled connectors wherever two wires terminate on the same terminal block connection.
   4. Product and Manufacturer: Provide one of the following:
      a. Phoenix Contact – Clipline.
      b. Thomas & Betts.
      c. Weidmuller.

P. Terminal Blocks:
   1. General:
      a. Numerically code terminals utilizing terminal block manufacturer's marking system. Information must be printed directly on the terminal label. Sticky back labels are not permitted.
      b. Terminal blocks must be DIN rail mountable with screw clamp connections. Spring cage connections are not permitted.
      c. Double level terminal blocks are permitted for use with signals on Analog Terminal Block (ATB) only.
      d. Terminals used for analog signals on ATB shall be colored blue.
      e. Terminal block jumpers must be connected via screw clamp. Screw clamped comb jumpers are permitted. Plug in jumpers are not permitted.
   2. Product and Manufacturer: For each terminal strip type provide one of the following:
      a. Power Terminal Block (PTB).
         1) Phoenix Contact, Type UK 5 N, Color Gray, Model # 30 04 36 2.
         2) Allen Bradley, Type 1492-J4, Color Gray, Model # 1492-J4.
         3) Weidmuller, Type WSU 4, Color Dark Beige, Model # 1020100000.
      b. Field Wiring Discrete Signal Terminal Blocks (TB1 and TB2).
         1) Phoenix Contact, Type UDK 3, Double Connection, Color Gray, Model # 27 75 37 5.
      c. Weidmuller, Type WDK 2.5V, Double Connection, Double Level, Internal Connection, Color Dark Beige, Model # 1905060000.

d. Field Wiring Analog or Internal Wiring DC Power (ATB) - Single Level Terminal Blocks:
    1) Phoenix Contact, Type UK 3N BU, Color Blue, Model # 30 01 51 4.
    2) Allen Bradley, Type 1492-J3-B, Color Blue, Model # 1492-J3-B.
    3) Weidmuller, Type WDU 2.5 BL, Color Blue, Model # 1020080000.
e. Field Wiring Analog or Internal Wiring DC Power (ATB) - Double Level Terminal Blocks. Alternating double and single level ATB terminal blocks are permitted.
    1) Phoenix Contact, Type MBKKB 2,5 BU, Double Level, Color Blue, Model # 27 71 09 4.
    2) Allen Bradley, Type 1492-JD3-B, Double Level, Color Blue, 3) Model # 1492-JD3-B.
    3) Weidmuller, Type WDK 2.5 BL, Double Level, Color Blue, 5) Model # 1021580000.

Q. Surge Protection:
1. Provide DC surge protection with integrated varistor for all analog signal loops that are terminated to Programmable Logic Controllers.
2. Provide maintenance free, self-restoring surge protection to protect the electronic instrumentation system from surges propagating along the signal and power supply lines. Device shall be removable without interrupting the circuit.
3. Provide a separate surge protector for the positive and a separate surge protector for the negative polarity of each loop.
4. Mount the surge protectors on the ATB.
5. Ground the surge protectors to the panel DC ground bus.
6. Label the surge protectors in sequential order starting with the ATB signals.
7. Required Features:
    a. Amp Rating: Compatible with working voltage and current of device being protected.
    b. Voltage Rating: Compatible with the working voltage of protected device.
    c. Reaction Time: nanosecond range.
8. Product and Manufacturer: Provide one of the following:
    a. Phoenix Contact.
    b. Advanced protection Technologies.
    c. EDCO.
    d. Or Equal.

R. Wireways:
1. General:
    a. Mount wireways using stainless steel bolts. Drill and tap the sub-panel to accommodate the bolts.
    b. Color to be Gray or White throughout the entire panel. Provide only one color.
    c. All wireways to include cover.
    d. Wireway covers to be labeled as per section 2.2.B.

2. Product and Manufacturer: Provide one of the following:
   a. Panduit.
   b. Thomas & Betts.
   c. Or Equal.

S. Alarms:
   1. Audible alarms shall be UL listed, 120VAC, with solid state circuitry, vibrating horn, non-metallic corrosion resistant housing, with required mounting hardware, suitable for outdoor use capable of producing 100 dB at 10 feet. The audible alarm shall be manufactured by Federal Signal model 350, Edwards Model 870-EX, or equal.
   2. Rotating beacons for interior and/or exterior locations shall be UL listed, 120VAC, with motor and cooling fan, rotating lights at 60 times per minute minimum, capable of producing 36,000 candlepower with required mounting hardware. Lens color shall be verified at the time of construction. The rotating beacons shall be manufactured by Federal Signal Model 371L or equal.
   3. Rotating beacons for corrosive and/or hazardous locations shall be UL listed, 120VAC, with solid state circuitry, rotating lights at 60 times per minute minimum, suitable for outdoor use capable of producing 36,000 candlepower with required mounting hardware. Lens color shall be verified at the time of construction. The rotating beacons shall be manufactured by Edwards Model 52EX, or equal.
   4. Strobe beacons shall be UL listed, NEMA 4X, 120VAC, flashing at 80 times per minute minimum, producing peak candlepower of 520,000, effective candlepower of 165, with required mounting hardware. Lens color shall be verified at the time of construction. The rotating beacons shall be manufactured by Federal Signal model 151XST, Edwards Model 92EX, or equal.

T. Intrinsically Safe Barriers:
   1. Intrinsic safety barriers shall permit connection of devices located in a hazardous area to other devices located in a safe area. Intrinsic safety barriers shall be EMC compliant, 10 to 35VDC, 35mA output current, hazardous area terminals identified by blue labels, terminals accommodating conductors up to 12AWG, ambient temperature rating of -20° C to +60° C. The intrinsic safety barriers shall be manufactured by MTL Inc., Ronan Engineering Co., R. Stahl Inc., A.T.C., or equal.

U. Elapsed Time Meters and Time Clocks:
   1. Elapsed time meters shall be self powered, non-reset, solid state counter which provides silent, accurate and noise immune operation. Elapsed time meters shall require no external power, five year minimum battery life, 120VAC power, accessories for panel mounting, nameplate below LCD display reading "HOURS", liquid crystal display with 6 digits approximately 2-inches high with 50,000 hour minimum display life and indication of sufficient battery

power. The elapsed time meters shall be manufactured by Durant, Automatic Timing and Controls, a Division of Sycon Corp., or equal.

2. Time clocks shall be microprocessor based, have 24 hour time control, up to 24 operations per day, programmable from panel face keys, skip-a-day feature allowing schedule to be skipped for one to seven days, SPDT switch contact rated at 15 amps at 120VAC, with battery carryover to maintain time and program during power outage for 275 hours. The time clocks shall be manufactured by Tork, Paragon Electric Company, or equal.

V. Motor Starters and Overload Relays:
   1. Refer to Specification Section 16480, Motor Controllers.

PART 3 - EXECUTION:

3.1 EXTERIOR PANEL:

A. Component Layout:
   1. Arrange associated control and indication devices for a particular part of the process in close proximity to each other.
   2. Mount indicating lights above control switches and push buttons.
   3. Standard component spacing is 3 ½" center to center and 3 ½" above and below. It is acceptable to use more space if required, but spatial consistency must be maintained.
   4. Maximum height for panel exterior-mounted devices is 6'-0" from the floor. Minimum height for panel exterior-mounted devices is 3'-0" from the floor.
   5. Locate alarm horn at the top of the panel. The alarm horn may be located above 6'-0" device height limitation.
   6. Unless otherwise noted; route field wiring through the bottom of the enclosure. Provide watertight conduit openings.

B. Exterior Panel Nameplates:
   1. General:
      a. Refer to Section 2.1.D for material and size requirements.
      b. Provide specific panel identification on nameplates derived from the contract specifications and drawings.
      c. Obtain ENGINEER approval for panel identification for panels that are not identified in the contract specifications and drawings.
   2. Panel Manufacturer Identifier and Power Requirements Nameplate (NP-1):
      a. Mount nameplate in the upper left corner of the panel front.
      b. Provide the following information for each circuit feeding the panel:
         1) The first line indicates the name of the manufacturer, location and phone number of who assembled the panel.
         2) The following lines:
            a) Include panel voltage, current, phase, frequency, short circuit current rating for each panel feed.

b) Provide switchboard name and circuit number for each circuit feeding the panel.
c) Refer to figure 3.1.B.2.

WILSON & Sons, CHANDLER, AZ 85226 - (480) 555-1234 120 VAC, 0.5 AMPS, 1Ø, 60HZ, SCCR 5KA, FED FROM LP-34, CIRCUIT 6

120 VAC, 7.5 AMPS, 1Ø, 60HZ, SCCR 8KA, FED FROM LP-34, CIRCUIT 8

Figure 3.1.B.2
Panel Manufacturer Identifier and Power Requirements Nameplate (NP-1)

3. Panel Identification Nameplate (NP-2)
   a. Mount panel identification nameplate in the top, center of the panel.
   b. Provide the following information:
      1) The first line of text is an abbreviation of the panel as shown on the CONTRACT drawings.
      2) The second line of text on the nameplate is used to spell out the process abbreviation.

3) Refer to figure 3.1.B.3.

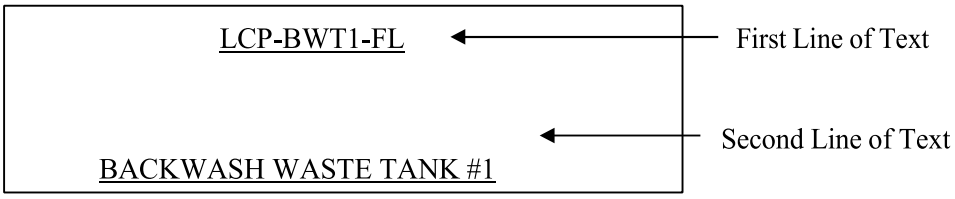

Figure 3.1.B.3

Panel Identification Nameplate (NP-2)

4. Panel Component Nameplates
   a. Mount nameplates above all control and indicating devices.
   b. Provide the following information:
      1) The first line indicates the instrument device loop identifier and number as shown on the DRAWINGS.
      2) The second line identifies the system equipment that the component is associated with.
      3) The third line identifies the control position, condition of the equipment or the alarm state being monitored.

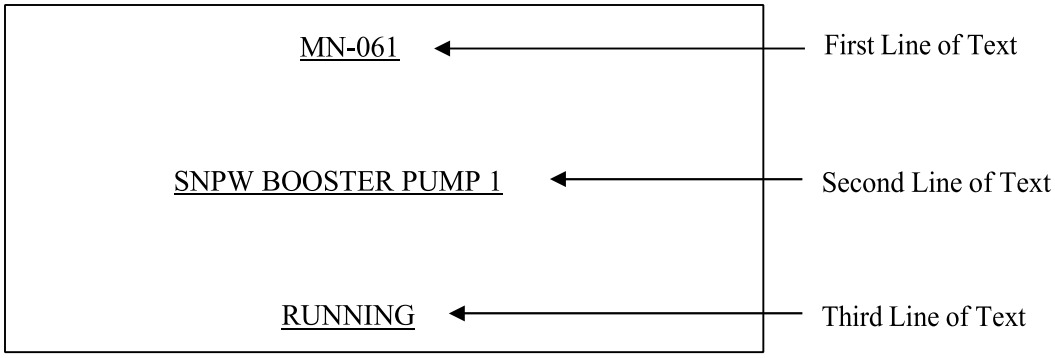

Figure 3.1.B.4
Panel Component Nameplates

4) Refer to figure 3.1.B.4.

3.2 INTERIOR PANEL

A. General:
   1. All Wall Mounted Panels - Where conduit enters the panel, maintain a minimum of 4" clearance from any device or wireway to allow room for routing of field wiring.
   2. Concrete Pad or Floor Mounted LCP's and MCP's – Where conduits enter the panel through the concrete pad, maintain a minimum of 6" clearance from any device or wireway to allow room for routing of field wiring. Where conduit enters the panel sides or top, maintain a minimum of 4" clearance from any device or wireway to allow room for routing of field wiring.
   3. Elevated Floor Mounted LCP's and MCP's - Where conduit enters the panel, maintain a minimum of 4" clearance from any device or wireway to allow room for routing of field wiring.
   4. Concrete Pad, Floor Mounted or Elevated Floor Mounted ITP's - Where conduits enter the panel through the top or bottom, maintain a minimum of 6" clearance from any device or wireway to allow room for routing of field wiring.
   5. Locate and install all devices and components so that connections can be easily made and that there is ample room for servicing each item.
   6. Maintain a minimum 2'0" clearance between components mounted on side panels and components mounted on the opposing side panel.
   7. Components mounted on the back panel are to be unobstructed by any components mounted on side panels.
   8. Adequately support and restrain all devices and components mounted on or within the panel to prevent any movement.

B. Panel Incoming Power:
   1. Panel power fed from lighting panels, or other sources with fused or circuit breaker protection, shall be wired to the Power Terminal Blocks (PTBs). Power sources entering the panel are to be provided with a separate neutral and

ground. The PTBs shall have a separate terminal for the hot and neutral for each circuit. The ground to be terminated to the AC ground bar.

2. Mount the PTBs near the top left corner of the panel.
3. Multiple power sources may be required for each panel. Power requirements are identified on the CONTRACT DRAWINGS. The following additional power sources may be required for the panel.
    a. Control Logic Power and Light Fixture.
    b. Air Conditioning.
4. Arrange the terminal strip in an orderly manner with circuit conductors grouped together. For instance, terminate the hot and neutral conductors on consecutive terminals. Label terminals and internal wiring as H1 and N1 (Control Logic), H2 and N2 (Air Conditioning). Identify each additional source in sequential order beginning with H3 and N3.
5. Terminate all incoming power on one side of the terminal strip.

C. AC Power Distribution:
    1. Identify the wire extending from the PTB to the supplementary protector as H1 and H2, etc. Using H1 as an example; the wire terminated to the line side of the supplementary protector is labeled H1, the wire terminated to the load side of the supplementary protector is labeled as L1-1.
    2. If L1-1 passes through an additional supplementary protector to feed panel components, this supplementary protector can be shown on the drawings in a horizontal or vertical position on a schematic rung and the wire terminated to the line side of the supplementary protector is labeled L1-1. The wire terminated to the load side of the supplementary protector is labeled L1 – (the Supplementary Protector #) and the wire color is black.
    3. If the panel controls multiple pieces of equipment, such as two pumps with separate control circuits, provide a supplementary protector for each control circuit.
    4. Powering 120 VAC field 4-wire instruments from the panel is not permitted.

D. DC Power Distribution:
    1. Mount DC power supplies near the top right of the panel. Mount fuses associated with the power supply in close proximity to the power supplies.
    2. Identify terminals used for DC power distribution as PTB-DC.
    3. Provide a fuse for each analog loop that loop power is provided by a power supply located in the panel.

E. Grounding:
    1. AC Ground:
        a. Provide the AC ground bus bar with cage type or screw terminals installed near the bottom of the back panel with extended mounting bolts.
        b. Provide adequate metal to metal contact between the AC ground bus bar and the back plane.
        c. Connect all AC power sources and devices to ground at this ground bus.
        d. Connect all panel enclosure doors to the AC ground bus.

e. Connect all side panels to the AC ground bus.
f. Provide a connection point on the ground bus for connection to the ground grid system.

2. DC Ground:
   a. Install the isolated DC grounding bus bar with cage type or screw terminals installed near the bottom of the back panel at a minimum distance of 6” from the AC ground bus.
   b. The isolated grounding bus bar consists of two non-conductive mounting blocks with a single copper grounding bar attached between them.
   c. Connect all shields (SH) requiring loop grounding in the panel from the analog signal terminals to the DC grounding bus bar.
   d. To avoid ground loops, connect analog cable signal shields to ground at one location only, preferably in the LCP, MCP or ITP; not in the field. Maintain consistency for the termination point of signal shield for all analog signals.
   e. Provide a connection point on the ground bus for connection to the ground grid system.
   f. Figure 3.2 illustrates a typical ground system within a panel. The illustration depicts the physical terminations of the ground wires in the panel. Ground Conductor AWG size to ground grid system shall be as stated in Specification 16170, Grounding and Bonding.

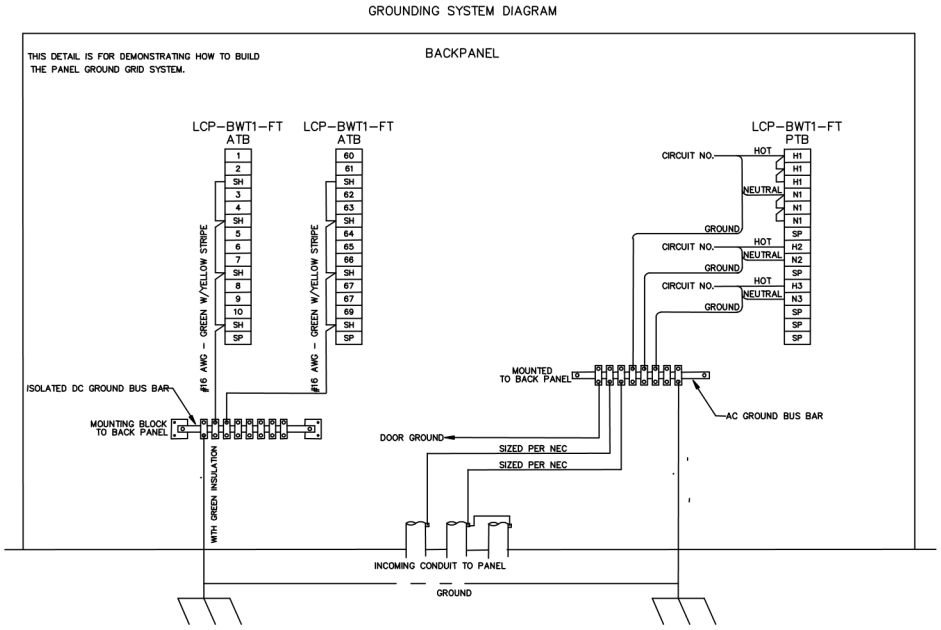

Figure 3.2 Typical Grounding Systems

F. Circuit Protection:
   1. Provide an isolating supplementary protector for each group of control logic. For example: the start, stop and reset control circuit for Pump #1 has a

dedicated supplementary protector supplying power to the control logic. Pump #2 requires a separate isolating supplementary protector for the control logic.

2. Provide an isolating supplementary protector for each component requiring 120 VAC power.
3. A supplementary protector is not required for control circuits powered from a fused control power transformer in an MCP.
4. Size supplementary protector to handle the connected load.
5. Mount supplementary protector next to the PTBs near the top left corner of the panel.
6. Provide an auxiliary contact for each supplementary protector. Wire each auxiliary contact from the supplementary protector in series to one "Power fail' relay. Send one Power Fail status to the Process Control Information System.

G. Internal Panel Wiring:
   1. Route all internal wiring using wireways. Terminate all internal wires on one side of the terminal blocks. The opposite side of the terminal block shall remain available for field wires.
   2. Where wires pass through panel walls, provide suitable bushings to prevent cutting or abrading of insulation.
   3. Adequately support and restrain all wiring runs to prevent sagging or other movement. Wires extended from the control logic to the panel door devices are to be wrapped in plastic protective wire wrap designed for this purpose.
   4. Wire splicing is not allowed at any time.
   5. Utilize two wires (hot and return leg) with field wiring for each field input. It is not acceptable to utilize one common Hot for multiple field inputs.
   6. Terminate wires with a non-insulated ferrule type crimp connector. Excessive stripping of the insulation to allow bare wire strands between the insulation and the ferrule is not permitted.
   7. Orientate wire labels on the individual conductor or cable so that wire labels are legible without having to twist or move the connectors. Securely heat shrink the labels around the conductor. Label wires or cables with the number assigned in the panel documentation. Refer to Section 2.2.K.1.e for wire label materials.
   8. DC wiring for analog and discrete field or Process Control Information System signals that enter or leave the panel are to be terminated on the Analog Terminal Block (ATB).
   9. AC wiring for discrete field signals that enter or leave the panel are to be terminated on the Terminal Block 1 (TB1).
   10. AC wiring for discrete Process Control Information System signals that enter or leave the panel are to be terminated on Terminal Block 2 (TB2).
   11. The terminal blocks (TB1, TB2 or ATB) can be mounted on the left or right side panels.
   12. Provide a minimum of 10% spare terminal DIN rail space per terminal strip.
   13. Signals from the field that enter the panel and only pass through the panel from the field to the Process Control Information System require internal wiring from TB1 to TB2.

14. Arrange all control wiring associated with a particular piece of process equipment together on adjacent terminal blocks.
15. Identify wire number by the schematic rung numbers. Label TB1 and TB2 terminals with the rung number associated with the internal wire number connected to the terminal. Label ATB terminals in sequential order starting with the number 1. Identify analog shield terminations with an "SH" on the terminal block.
16. Multi-conductor cables of two pair or more shall have the outer cable insulation removed before entering the wireway.
17. Route all DC power and analog signals at a minimum of six inches from AC power and controls. When the six inch minimum distance is not available, provide a metallic barrier that extends 3" beyond the tallest wireway between the analog and discrete wireways.

H. Wireways:
1. Mount wireways from the internal panel components and terminal blocks with a minimum 2" spacing.
2. Arrange wireways to maintain a six inch minimum distance between analog and discrete circuit wiring.
3. Provide wireways for all field wiring. Arrange wireways to allow field wiring to enter from the top or bottom of the panel.
4. Align wireways between back and side panels.
5. Install a wireway on both sides of each terminal strip.
6. Size wireways to prevent conductor fill from exceeding 50% of the interior cross-sectional area of the wireway.
7. In addition to the above requirements, for ITP's, wireways are not to be common for two terminal strips. Each terminal strip shall have a dedicated wireway on each side of the strip.

I. Control Logic:
1. The Start commands are to be designed utilizing normally open contacts from pushbuttons and/or the Process Control Information System and shall be of a momentary signal that will require a seal circuit to maintain operation. Constant signals from positions switches are not allowed unless noted on the CONTRACT DRAWINGS.
2. All system failure, safety logic control devices or normal operations that are intended to cause the equipment to stop are to be wired in series with the start seal circuit. The unsealing of the start command on any fault or normal operation that causes the equipment to stop will require another start command to reseal.
3. Provide interlocks for the control functions of Local and Computer Modes in series with the Start and Stop logic. Provide a closed switch or relay contact to the Process Control Information System to identify when the equipment is in Computer Mode.
4. Provide control logic of voltage 120 VAC.

5. Use power relays when control relay contacts are insufficient for the designated load.
6. Terminate the “Hot” conductor on the common of the switch or relay contact.
7. Control alarm logic shall be wired in a fail safe mode from the field device to the panel circuitry to alarm when a field wire has failed.

3.3 PANEL DRAWING DOCUMENTATION

A. General:
   1. Files of the title block, panel symbols for front and internal sub-panel elevations, terminal strips, control schematics, analog loops, etc. are available in hard copy and AutoCAD .dwg format from the OWNER upon request through the ENGINEER via Example Panel Drawing Packages and Drawing Templates.
   2. Provide drawing copies in the following format:
      a. Hard Copy - B Size - 11” X 17”.
      b. Hard Copy - D Size - 22” X 34”.
      c. Soft Copy in .DWG.
   3. The panel drawing documentation package consists of the following drawings types arranged in the following order. a. Cover Sheet.
      a. Symbols and Legends 1 – Exterior and Interior Panel Symbols.
      b. Symbols and Legends 2 – Schematic Symbols.
      c. Front Panel Elevation.
      d. Interior/Sub Panel Layout.
      e. Terminal Strip Drawings.
      f. Control Schematics.
      g. Analog Loop Diagrams.
      h. Point to Point Discrete Wiring Diagrams.
   4. Drawing Scale:
      a. Provide Front Elevation and Interior/Sub Panel Layout Drawings proportionately correct and to scale. Create all drawings on a D Size layout.
   5. Border and Title Block:
      a. Provide each drawing with a border and title block information.
      b. Utilize the border and title block as provided in the Drawing Templates referenced in Section 3.03.A.1.

B. Panel Drawing Types:
   1. General:
      a. Provide a complete documentation package for each panel consisting of the drawings in the order listed in Section 3.03.A.3.
   2. Cover:
      a. Cover sheet for the panel documentation shall include the following information.

1) Located on the left half of the sheet to include the manufacturers name, address, phone number, web address, project reference number and ul508a certification number.
2) On the right half of the sheet include the following, “customer name” “department” and the project title, project number, the panel full title, the panel abbreviation, the facility area in which the panel exists, submittal date, volume number and sheet count.

3. Symbols & Legends:
   a. Utilize the Symbols and Legend sheets as provided by the OWNER upon request from the ENGINEER.
   b. Additional symbols may be added if an existing symbol on the Symbol and Legend sheets does not exist.
4. Front Elevation Drawing:
   a. The Front Elevation drawing illustrates the arrangement of the panel and position of the devices on the front face of the panel.
   b. Provide panel dimensions in inches. Provide dimensions for height, width, and depth. If the panel is small in size, the Front Elevation Drawing and Internal layout Drawing can be combined on one drawing.
   c. Provide the nameplate schedule on the Front Elevation drawing.
   d. Device Callouts:
      1) Device callout hexagons are utilized to reference a device to the bill of materials. Place the bill of material item number inside the hexagon.
      2) Provide a leader from the hexagon that will point to the device.
      3) For a typical of multiple devices of the same type, only one device callout is necessary.
   e. Provide air conditioning heating and cooling information as provided by the Hoffman Temperature Calculation tool at: http://www.hoffmanonline.com/product_catalog/tools/index.aspx?cat_1=3 4&cat_2=375&SelectCatID=375&CatId=375.
5. Interior Sub Panel Layout:
   a. General:
      1) The Interior Sub Panel Layout drawing identifies the individual interior components and their physical location.
      2) Draw all components within the panel to scale.
      3) Include all interior sub panels if the panel has sub panels on the side walls.
   b. Provide the following information on the Interior Sub Panel Layout Drawing. Utilize the formats provided on the Drawing Templates. The information can be shown on a second sheet if needed to drawing clutter.
      1) Bill of Materials:
         a) Include the devices on the Front Panel Elevation and the Interior Sub Panel(s) Elevation.
         b) Include items that are not specifically shown on the Front Panel Elevation or the Interior Sub Panel Layout drawing, such as wire size, color and type, on the bill of materials.

c) The utilization or insertion of Microsoft Excel files for the Bill of Materials is not allowed.

2) Fuse Schedule.

3) Supplementary Protector Schedule.

c. Label and identify all devices, including terminal strips, relays, fuses, timers, power supplies and other special components on the drawing.

d. For unique devices not shown on the Symbols and Legend Sheets, use rectangles and squares with the appropriate dimensions of the device.

e. Device Callouts:

1) Device callout hexagons are utilized to reference a device to the bill of materials. Place the bill of material item number inside the hexagon.

2) Provide a leader from the hexagon that will point to the device.

3) For a typical of multiple devices of the same type, only one device callout is necessary.

6. Terminal Strip Drawing:

a. General:

1) Terminal Strip Drawings provides locations for wiring terminations from field devices and other equipment external to the panel.

2) Display the wiring connections exactly as they are physically installed. For example, if field wiring is terminated to the left side of the terminal strip, the terminal strip drawing displays the wiring connections to the left side of the terminal block.

3) There are 5 different types of terminal strips and each has a specific function. The following is a brief description of each: a) For LCP's and MCP's:

a) Power Terminal Block (PTB) – Power supply/supplies to the panel (120 VAC or higher). Identify terminal block number with the wire number assigned in the control logic drawings. Identify power sources with the originating panel, voltage and circuit number.

b) Field Wiring Discrete Signal Terminal Blocks (TB1) – Discrete field inputs and outputs to/from the panel. Identify terminal block number with the rung number assigned in the control logic drawings.

c) Field Wiring Discrete Signal Terminal Blocks (TB2) – Discrete inputs and outputs to/from the Process Control Information System. Identify terminal block number with the rung number assigned in the control logic drawings.

d) Field Wiring Analog (ATB) or Internal Wiring DC Power

e) Terminal Blocks - Field or Process Control Information System Analog inputs and outputs to/from the panel, including 4-20 mA, 1-5 VDC, thermocouple or Resistance Temperature Detectors (RTD's). Identify terminal block number with consecutive numbers starting with number 1.

f) The shield wire terminal block is to be label "SH".

g) For ITP's:
i. TB-A thru Z – Discrete field inputs and outputs to/from the panel.
ii. ATB-A thru Z – Analog inputs and outputs to/from the panel.

4) It is acceptable, if space available, to combine TB1, TB2, ATB and PTB on a single terminal strip drawing.
5) Identify spare terminals with an "SP" inside the rectangle.
6) Display terminals in the order they appear in the panel.
7) Place field wire labels on each line extending toward the terminal. Obtain this information from the cable and conduit schedules. If wire labels are unavailable, place seven "X's" where wire tag normally resides. Provide this information prior to final deliverable of the Operations & Maintenance Manuals.
8) Signal description consists of 3 lines of text. Center the text next to the terminals.
a) The 1st line of text lists the Equipment Name.
b) The 2nd line of text is for the Signal Function.
c) The 3rd line of text is the Signal Loop Number, if applicable.

7. Control Schematic:
a. General:
1) Control Schematics show the controls associated with pieces of process equipment and provide a visual depiction of the majority of control wiring.
b. Control Schematic Components:
1) Power Rail:
a) Represent the power rail with two parallel vertical lines that extend vertically down the schematic.
b) Each drawing includes two sets of power rails separated by 2.5".
c) Identify each power rail with the wire number such as L1 at the top and bottom of each power rail.
d) The left power rail represents the "Hot" side of the power source. The right power rail represents the "Neutral" side of the power source.
2) Power Source:
a) Identify power source(s) with the originating panel, voltage and circuit number between the "Hot" terminal and "Neutral" terminal on the first rung of the portion of the schematic for each source.
b) Indicate the terminals from the PTB providing the source and neutral powering the rail.
c) A supplementary protector or fuse is displayed in the power rail directly below the power source (Hot) terminal. Label the supplementary protector or fuse with the supplementary protector or fuse number and current rating.
d) Power layout for LCP's:

i. In the first portion of the schematic, display power to the general purpose receptacle and panel light.
ii. In the second portion of the schematic, display power to the air conditioner and/or heater.
iii. In the third portion of the schematic, display the power to the control logic.
iv. See Sections 3.2.B Panel Incoming Power and 3.2.C AC Power Distribution.

e) Power layout for MCP's:
i. The first portion is for the typical 480 VAC motor control circuit with starter and disconnect, the next sections are the same as for the LCP's.

f) Rung Number:

3) Rung Number:
a) Rung numbers are used to identify the location and cross referencing of devices within the schematic and provide a practical means of labeling conductors and terminals within the panel.
b) Rung numbers are a sequential series of numbers starting with number 1. Locate the numbers vertically along the left side of the "Hot" power rail.
c) Rungs are to be spaced on 0.5" centers based on a D Sized drawing.

4) Wire Numbering:
a) On the downstream side of the first device on a rung, the wire number takes the rung number appearing to the left of the power rail. If a second device is located in the circuit, the wire number to the right of the second device takes the rung number, but is appended with an "A". The wire number to the right of the third device is appended with a "B", and so on.
b) When the electrical connection originated on the previous rung, the wire numbers continue to use the previous rung number as the base.
c) Connections to the power neutral rail take on the power neutral rail's wire number N#.

5) Electrical Connections:
a) Represent electrical connections as a solid small circle where two or more wires interconnect.
b) Represent electrical connections as a hollow small circle where wires terminate to a device.

6) Electrical Wiring:
a) Electrical wires or circuits are represented by horizontal rungs that connect terminal blocks, relays, contacts and all other components used in the electrical schematic.
b) Space the schematic electrical wiring every other rung at a minimum.

c) Identify each wire with the rung number as the wire number.
d) Label each wire with the conductor insulation color below each electrical wire. Refer to Table 2.2.K.1.f.
e) Indicate electrical wiring that is external to the panel with dashed lines.

7) Device Labeling:
   a) Symbols in the schematic for field devices, pilot lights, switches, push buttons etc. requires two lines of text above the device and one line of text below the device to describe the usage of the device.
      i. The first line of text above the device is the name of the equipment with which the device is associated.
      ii. The second line of text above the device is the control function of the device.
      iii. The line of text under the device is the loop number.
   b) Relay and timer symbol labels are to be identified with consecutive number starting with the number 1 or the rung number. For relay coils and contacts, identify the relay base terminal connection. Normally open or normally closed contacts refer to the de-energized or "off the shelf" state.
   c) Symbols in the schematic for contacts of relays, timers, etc. require two lines of text above the contact and two lines of text below the contact to describe the usage and coil reference of the contact.
      i. The first line of text above the contact is the name of the equipment the device is associated with.
      ii. The second line of text above the device is the control function of the device.
      iii. The first line of text under the device is the relay or timer number to reference the relay or timer in the schematic.
      iv. The second line of text under the device is the rung number of the relay or timer to reference where the relay or timer is located in the schematic. If using the rung number for the relay or timer coil, the rung number under the contact is not required.
      v. For relays and timer contact references, at the right of the neutral power rail, the schematic rung number location of all associated contacts is shown. If the contact is normally closed, underline the reference number. If a contact is unused, "SP" is shown.

8) Field Contacts:
   a) Show Field Contacts connected to their respective TB1 or TB2 Terminals.
   b) The connection lines from the contact to the terminal are dashed to designate they originate from outside the panel.

9) Selector Switches:

a) Always show the switch in the far-left position, the switch contacts are shown as either opened or closed in this state. If they're in the closed state, the contact is shown closed, indicated by a line shown below and touching the two side small circles. If the contact is open in this position, a line is drawn above the two side small circles, but not touching them.
b) Show each position of the switch directly above its respective location on the switch. This indicates whether it is a two, three, four, or more position (pole) switch, and shows what the nameplate on each position will read.
c) To indicate which positions the contact is closed, show a contact legend in parenthesis below and to the right of the contact. If the contact is closed in a position, an "X" is shown in the order of the contact position in which it is closed. If the contact is open in a position, an "O" is shown.
d) When a selector switch is continued onto another sheet or further down on the same sheet, the continuation note is shown below the selector switch. Where the switch is continued, the same note appears, but on the top of the contact.

10) Push Buttons:
a) Represent the push button contact in its "off the shelf" state.

11) Terminals:
a) Terminal numbers are dependent upon the specific rung number that they appear in the schematic logic. As a horizontal electrical connection is followed from left to right, the first terminal number takes on the number of the rung. The second terminal number also takes the rung number but is appended by the letter A, the third by the letter B, and so on.

12) Programmable Logic Controller:
a) Panels that contain a Programmable Logic Controller (PLC) require connection information for the PLC I/O modules.
i. Utilize the PLC drawings as provided in the Drawing Templates referenced in Section 3.03.A.1.
b) Module Layout:
i. Represent the module with a 1 1/2" wide vertical rectangle with a length suitable to encompass a maximum of 16 channels or 8 analog per section based on type of module.
ii. Two cards can be shown per sheet.
iii. Display field wiring (inputs) including TB1 and field device connections with a description on the left side of the module symbol.
iv. Label the module with model number, input voltage, rack number and slot number above the module symbol.
iv. Number each screw terminal per manufacturer's data.

v. Display the associated PLC register address with each signal.
vi. Identify the positive and negative legs of the analog cable.
vii. Include all required jumpers for signal type and all 120VAC and 24VDC power requirements.

13) 480 Volt Equipment:
    a) a) Provide the motor horsepower, full load amps and motor identification.
14) Contact Development:
    a) The last sheet of the control schematic displays contacts for internal panel relay contacts that connect with external field equipment or the Process Control Information System (PCIS).
    b) Organizes into two sections. The first section lists all contacts extending to the PCIS. Title this section "Contacts to PCIS". The second section lists all contacts extending into the field equipment external to the panel. Title this section "Contacts to Field". Group multiple contacts related to a single piece of equipment together.
    c) Each contact includes a signal description and its associated relay number and relay rung number location. Device signals require the appropriate symbol from the Schematic Legend Sheet.

8. Analog Loop Diagrams:
   a. General:
      1) The analog loop diagram only displays the portion of the instrument loop that passes through a particular panel.
      2) The analog loop diagram displays the connections between field instruments, panels and the PCIS.
      3) Analog loop diagrams are reserved for analog signals and control loops, but may be used to show complex connections for a particular instrument or device.
      4) Divide each loop into three different segments.
         a) The left segment is "FIELD" connections. This segment provides information on terminations external to the panel (i.e., connected panels, instrument transmitters). If the first segment is another panel, the panel name replaces the "FIELD" label.
         b) The center segment is the internal panel wiring and controls.
         c) The right segment information represents output or input signals to downstream panels or the PCIS.
      5) Identify shield grounding location.
      6) Identify surge protection devices for each signal. Include surge protection for positive and negative leads. Utilize the surge protection block symbol from the legends and symbols sheet.
      7) Identify the cable number, wire color and polarity for each cable in the loop.

3.4 INSTALLATION

A. Install equipment in conformance with NEC. Mounting panels on handrails is not allowed.

B. Unless otherwise noted, install indoor free standing panels on 4-inch concrete pad. Extend pad 4-inches beyond outside dimensions of base, all sides. Lay grout after panel sills have been securely fastened down.

C. Unless otherwise noted, install outdoor free standing panels on a reinforced concrete pedestal:
   1. Minimum Thickness: 8-inches with No. 4 steel reinforcing bars at 12-inches on centers, each way.
   2. Minimum Size: 4-inches larger than outer dimensions of base, all sides.
   3. Provide excavation and backfill work in conformance with Section 02260, Excavation Support and Protection.
   4. Provide concrete work in conformance with Section 03300, Cast-In-Place Concrete.
   5. Seal the contact surface between the panel base along the outside perimeter of the panel using RTV sealant.
   6. Install anchor bolts and anchor in accordance with Section 05190, Mechanically Anchoring and Fastening to Concrete and Masonry.

D. Elevated Panels with floor stands:
   1. 1. When installing conduits through bottom, utilize bushings to retain the NEMA rating of the panel.

E. Install each item in accordance with manufacturer's recommendations and in accordance with the Contract Documents.

3.5 RECORD DRAWINGS:

A. Maintain a set of red-line panel drawings to reflect changes or deviations that occur during installation, start-up and commissioning and incorporates these deviations into the final Operation & Maintenance Manual.

3.6 SPARE PARTS AND TEST EQUIPMENT

A. Furnish and deliver the spare parts and test equipment as outlined below, identical and interchangeable with similar parts furnished under this Specification.

B. Pack spare parts in containers suitable for long term storage, bearing labels clearly designating the contents and the pieces of equipment for which they are intended.

C. The following constitutes the minimum spare parts:
   1. Five of each type of control relay for each 40 or less furnished for this Contract.

2. One replacement power supply for each type and size furnished for this Contract.
3. One per ten (two, if fewer than twenty) of each type of panel mounted instrument including lights and pushbuttons.
4. One dozen of each type and size of fuse used in panels and instruments.

D. The following constitutes the minimum test and calibration equipment:
1. All tooling required to insert, extract and connect any internal or external connector, including edge connectors.
2. All special calibration equipment required for system calibration.

3.7 TESTING AND ADJUSTMENTS:

A. Perform system testing and make any adjustments necessary in accordance with this Section and Section 17000, Instrumentation.

B. Perform power supply, voltage adjustments to tolerances required by the appurtenant equipment.

C. A Factory Acceptance Test shall be conducted before the panel is shipped to the site.
1. The Factory Acceptance test shall be witnessed by the ENGINEER and OWNER.
2. The Factory Acceptance Test Report shall be utilized to document the test.
3. All Control Panels require the Factory Acceptance Test to be witnessed by ENGINEER and OWNER:
4. Provide all labor, materials, equipment and incidentals as shown on the Drawings, specified and required to perform factory testing, before shipment, at the manufacturer's facility to verify that system components are functioning properly and that they meet the functional and performance requirements of the Contract Documents.
5. Submit information on factory testing procedures to verify that testing shall fulfill the requirements as specified herein. Submittal shall be made at least two months in advance of any scheduled testing and shall include dates of scheduled tests.
6. Notify ENGINEER, in writing, at least four weeks before expected initiation of tests. OWNER and ENGINEER may elect to be present at CONTRACTOR'S facilities during operational test of system equipment, either for individual units or as an integrated system. Presence of OWNER and ENGINEER during testing does not relieve CONTRACTOR from conforming to the requirements of the Contract Documents and shall in no way imply acceptance of the equipment.

D. System Hardware Operational Testing:
1. All input/output devices and components shall be tested to verify operability and basic calibration.

2. All system hardware components equipment shall be tested to verify proper operation of the equipment as stand alone units. Test shall include, but not be limited to, the following:
    a. AC/DC power checks.
    b. Power fail/restart tests.
    c. Diagnostics checks.
    d. Test demonstrating that all specified equipment functional capabilities are working properly.
    e. All system components shall be tested to verify that communication between units is working properly.

3.8 MANUFACTURER'S SERVICE

A. Provide the services of qualified factory-trained service representative to check and approve the installation of the panel(s).

B. The factory trained service representative shall be provided for installation supervision, start-up and testing services. The representative shall make a minimum of 2 visits to the site to approve the completed installation and to perform start-up testing of the equipment. The representative shall coordinate each visit with the ENGINEER prior to arrival on the site. The representative shall test operate the system in the presence of the ENGINEER and verify that the equipment conforms to requirements. The representative shall revisit the job site as often as necessary until the installation and testing is entirely satisfactory.

C. The factory trained service representative shall be provided for operation and maintenance personnel training services. The representative shall make a minimum of 1 visits to the site to perform the services as described under Section 01782, Operations and Maintenance Data. The representative shall coordinate each visit with the ENGINEER prior to arrival on the site.

D. For the factory trained service representative, all costs, including travel, lodging, meals and incidentals, shall be considered as included in the bid price.

E. Warranty: Standard Manufacturers and General Contractor Warranties.

++ END OF SECTION ++

SECTION 16170

GROUNDING AND BONDING

PART 1 - GENERAL

1.1 RELATED DOCUMENTS

A. Drawings and General Provisions of the Contract, including General and Supplementary Conditions and Division 1, General Requirements, Specification Sections apply to this Section.

1.2 SUMMARY

A. This Section includes grounding of electrical systems and equipment. Grounding requirements specified in this Section may be supplemented by special requirements of systems described in other Sections.

1.3 SUBMITTALS

A. Product Data: For each type of product indicated.

B. Product Data: For the following:
   1. Ground rods.
   2. Grounding conductors and cables.
   3. Connector products.
      Submit Shop Drawings identifying each ground rod location, distance between Ground Rods and ground rod assemblies and other grounding electrodes. Identify each by letter in alphabetical order, add a key legend including GPS coordinates.

C. Qualification Data: For firms and persons specified in Paragaph 1.4 of this Specification.

D. Field Test Reports: Submit written test reports to include the following:
   1. Test procedures used.
   2. Test results that comply with requirements.
   3. Results of failed tests and corrective action taken to achieve test results that comply with requirements.

E. Shop Drawings: Submit for approval the following:
   1. A copy of this specification section, with addendum updates included, and all referenced and applicable sections, with addendum updates included, with each paragraph check-marked to indicate specification compliance or marked to indicate requested deviations from specification requirements. Check

marks (✓) shall denote full compliance with a paragraph as a whole. If deviations from the specifications are indicated, and therefore requested by the CONTRACTOR, each deviation shall be underlined and denoted by a number in the margin to the right of the identified paragraph, referenced to a detailed written explanation of the reasons for requesting the deviation. The ENGINEER shall be the final authority for determining acceptability of requested deviations. The CONTRACTOR shall furnish equipment and/or services as specified if an exception and/or deviation is rejected. The remaining portions of the paragraph not underlined will signify compliance on the part of the CONTRACTOR with the specifications. Failure to include a copy of the marked-up specification sections, along with justification(s) for any requested deviations to the specification requirements, with the submittal shall be sufficient cause for rejection of the entire submittal with no further consideration.

2. The CONTRACTOR shall submit the preventive maintenance information package as part of the shop drawing submittal package to the ENGINEER for review and approval. **SHOP DRAWING SUBMITTAL PACKAGE WILL NOT BE APPROVED WITHOUT ACCEPTANCE OF PREVENTIVE MAINTENANCE INFORMATION.**

1.4 QUALITY ASSURANCE

A. Electrical Components, Devices, and Accessories: Listed and labeled as defined in NFPA 70, Article 100, by a testing agency acceptable to authorities having jurisdiction, and marked for intended use.
   1. Comply with UL 467.

B. Comply with NFPA 70; for overhead-line construction and medium-voltage underground construction, comply with IEEE C2.

C. Comply with NFPA 780 and UL 96 when interconnecting with lightning protection system.

PART 2 - PRODUCTS

2.1 MANUFACTURERS

A. Manufacturers: Subject to compliance with requirements, provide products by one of the following:
   1. Grounding Conductors, Cables, Connectors, and Rods:
   2. Apache Grounding/Erico, Inc.
   3. Chance/Hubbell.
   4. Copperweld Corp.
   5. Dossert Corp.
   6. Erico, Inc.; Electrical Products Group.

7. Framatome Connectors/Burndy Electrical.
8. Galvan Industries, Inc.
9. Kearney/Cooper Power Systems.
10. Korns: C. C. Korns Co.; Division of Robroy Industries.
11. O-Z/Gedney Co.; a business of the EGS Electrical Group.
12. Raco, Inc.; Division of Hubbell.
13. Superior Grounding Systems, Inc.
14. Thomas & Betts, Electrical.

2.2 GROUNDING CONDUCTORS

A. For insulated conductors, comply with Sections 16123 and 16124, Conductors and Cables.

B. Material: Copper.

C. Equipment Grounding Conductors: Insulated with green-colored insulation.

D. Isolated Ground Conductors: Insulated with green-colored insulation with yellow stripe. On feeders with isolated ground, use colored tape, alternating bands of green and yellow tape to provide a minimum of three bands of green and two bands of yellow.

E. Grounding Electrode Conductors: Stranded cable.

F. Underground Conductors: Bare, tinned copper, stranded, unless otherwise indicated.

G. Bare Copper Conductors: Comply with the following:
   1. Solid Conductors: ASTM B3.
   2. Assembly of Stranded Conductors: ASTM B8.
   3. Tinned Conductors: ASTM B33.

H. Copper Bonding Conductors: As follows:
   1. Bonding Cable: 28 kcmil, 14 strands of No. 17 AWG copper conductor, 1/4-inch in diameter.
   2. Bonding Conductor: No. 4 or No. 6 AWG, stranded copper conductor.
   3. Bonding Jumper: Bare copper tape, braided bare copper conductors, terminated with copper ferrules; 1-5/8-inches wide and 1/16-inch thick.
   4. Tinned Bonding Jumper: Tinned-copper tape, braided copper conductors, terminated with copper ferrules; 1-5/8-inches wide and 1/16-inch thick.

I. Grounding Bus: Bare, annealed copper bars of rectangular cross-section, with insulators.

2.3 CONNECTOR PRODUCTS

A. Comply with IEEE 837 and UL 467; listed for use for specific types, sizes, and combinations of conductors and connected items.

B. Bolted Connectors: Bolted pressure-type connectors.

C. Welded Connectors: Exothermic welded type, in kit form, and selected per manufacturer's written instructions.

2.4 GROUNDING ELECTRODES

A. Ground Rods: Copper-clad steel.
   1. Size: 3/4-inch in diameter by 120-inches long.

B. Ground Rods: Sectional type; copper-clad steel.
   1. Size: 3/4-inch in diameter by 120-inches long.

PART 3 - EXECUTION

3.1 APPLICATION

A. Use only copper conductors for both insulated and bare grounding conductors in direct contact with earth, concrete, masonry, crushed stone, and similar materials.

B. In raceways, use insulated equipment grounding conductors.

C. Exothermic Welded Connections: Use for connections to structural steel and for underground connections, except those at test wells.

D. Equipment Grounding Conductor Terminations: Use bolted pressure clamps.

E. Ground Rod Clamps at Test Wells: Use bolted pressure clamps with at least two bolts.

F. Grounding Bus: Install in electrical and telephone equipment rooms, in rooms housing service equipment, and elsewhere as indicated.
   1. Use insulated spacer, space 1-inch from wall and support from wall 6-inches above finished floor, unless otherwise indicated.
   2. At doors, route the bus up to the top of the door frame, across the top of the doorway, and down to the specified height above the floor.

G. Underground Grounding Conductors: Use copper conductor, No. 4/0 AWG minimum. Bury at least 24-inches below grade or bury 12-inches above duct bank when installed as part of the duct bank.

3.2 EQUIPMENT GROUNDING CONDUCTORS

A. Comply with NFPA 70, Article 250, for types, sizes, and quantities of equipment grounding conductors, unless specific types, larger sizes, or more conductors than required by NFPA 70 are indicated.

B. Install equipment grounding conductors in all feeders and circuits.
   1. Install insulated equipment grounding conductor with circuit conductors for the following items, in addition to those required by NEC:
   2. Feeders and branch circuits.
   3. Lighting and Receptacle circuits.
   4. Control Circuits.
   5. Single-phase motor and appliance branch circuits.
   6. 3-phase motor and appliance branch circuits.
   7. Flexible raceway runs.
   8. Armored and metal-clad cable runs.

C. Busway Supply Circuits: Install insulated equipment grounding conductor from the grounding bus in the switchgear, switchboard, or distribution panel to equipment grounding bar terminal on busway.

D. Computer Outlet Circuits: Install insulated equipment grounding conductor in branch-circuit runs from computer-area power panels or power distribution units.

E. Isolated Grounding Receptacle Circuits: Install an insulated equipment grounding conductor connected to the receptacle grounding terminal. Isolate grounding conductor from raceway and from panelboard grounding terminals. Terminate at equipment grounding conductor terminal of the applicable derived system or service, unless otherwise indicated.

F. Isolated Equipment Enclosure Circuits: For designated equipment supplied by a branch circuit or feeder, isolate equipment enclosure from supply raceway with a non-metallic raceway fitting listed for the purpose. Install fitting where raceway enters enclosure, and install a separate equipment grounding conductor. Isolate equipment grounding conductor from raceway and from panelboard grounding terminals. Terminate at equipment grounding conductor terminal of the applicable derived system or service, unless otherwise indicated.

G. Non-metallic Raceways: Install an equipment grounding conductor in non-metallic raceways unless they are designated for telephone or data cables.

H. Signal and Communication Systems: For telephone, alarm, voice and data, and other communication systems, provide No. 4 AWG minimum insulated grounding conductor in raceway from grounding electrode system to each service location, terminal cabinet, wiring closet, and central equipment location.

1. Service and Central Equipment Locations and Wiring Closets: Terminate grounding conductor on a 1/4-inch by 2-inch by 12-inch grounding bus.
2. Terminal Cabinets: Terminate grounding conductor on cabinet grounding terminal.

I. Metal Poles Supporting Outdoor Lighting Fixtures: Provide a grounding electrode in addition to installing a separate equipment grounding conductor with supply branch circuit conductors.

3.3 COUNTERPOISE

A. Ground the steel framework of the building with a driven ground rod at the base of every corner column and at intermediate exterior columns at distances not more than 60 feet apart. Provide a grounding conductor (counterpoise), electrically connected to each ground rod and to each steel column, extending around the perimeter of the building. Use tinned-copper conductor not less than No. 4/0 AWG for counterpoise and for tap to building steel. Bury counterpoise not less than 18-inches below grade and 24-inches from building foundation.

3.4 INSTALLATION

A. Ground Rods: Install at least three rods spaced at least one rod length from each other, and located at least the same distance from other grounding electrodes.
   1. Drive ground rods until tops are 2-inches below finished floor or final grade, unless otherwise indicated.
   2. Interconnect ground rods with grounding electrode conductors. Use exothermic welds, except at test wells and as otherwise indicated. Make connections without exposing steel or damaging copper coating.

B. Grounding Conductors: Route along shortest and straightest paths possible, unless otherwise indicated. Avoid obstructing access or placing conductors where they may be subjected to strain, impact, or damage.

C. Bonding Straps and Jumpers: Install so vibration by equipment mounted on vibration isolation hangers and supports is not transmitted to rigidly mounted equipment. Use exothermic welded connectors for outdoor locations, unless a disconnect-type connection is required; then, use a bolted clamp. Bond straps directly to the basic structure taking care not to penetrate any adjacent parts. Install straps only in locations accessible for maintenance.

D. Metal Water Service Pipe: Provide insulated copper grounding conductors, in conduit, from building's main service equipment or grounding bus, to main metal water service entrances to building. Connect grounding conductors to main metal water service pipes by grounding clamp connectors. Where a dielectric main water fitting is installed, connect grounding conductor to street side of fitting. Bond metal grounding conductor conduit or sleeve to conductor at each end.

E. Water Meter Piping: Use braided-type bonding jumpers to electrically bypass water meters. Connect to pipe with grounding clamp connectors.

F. Bond interior metal piping systems and metal air ducts to equipment grounding conductors of associated pumps, fans, blowers, electric heaters, and air cleaners. Use braided-type bonding straps.

G. Bond each aboveground portion of gas piping system upstream from equipment shut-off valve.

H. Install test wells as indicated on the Contract Documents.

3.5 CONNECTIONS

A. General: Make connections so galvanic action or electrolysis possibility is minimized. Select connectors, connection hardware, conductors, and connection methods so metals in direct contact will be galvanically compatible.
   1. Use electroplated or hot-tin-coated materials to ensure high conductivity and to make contact points closer to order of galvanic series.
   2. Make connections with clean bare metal at points of contact.
   3. Coat and seal connections having dissimilar metals with inert material to prevent future penetration of moisture to contact surfaces.

B. Exothermic Welded Connections: Comply with manufacturer's written instructions. Welds that are puffed up or that show convex surfaces indicating improper cleaning are not acceptable.

C. Equipment Grounding Conductor Terminations: For No. 8 AWG and larger, use pressure-type grounding lugs. No. 10 AWG and smaller grounding conductors may be terminated with winged pressure-type connectors.

D. Noncontact Metal Raceway Terminations: If metallic raceways terminate at metal housings without mechanical and electrical connection to housing, terminate each conduit with a grounding bushing. Connect grounding bushings with a bare grounding conductor to grounding bus or terminal in housing. Bond electrically non-continuous conduits at entrances and exits with grounding bushings and bare grounding conductors, unless otherwise indicated.

E. Connections at Test Wells: Use compression-type connectors on conductors and make bolted- and clamped-type connections between conductors and ground rods.

F. Tighten screws and bolts for grounding and bonding connectors and terminals according to manufacturer's published torque-tightening values. If manufacturer's torque values are not indicated, use those specified in UL 486A.

G. Compression-Type Connections: Use hydraulic compression tools to provide correct circumferential pressure for compression connectors. Use tools and dies recommended by connector manufacturer. Provide embossing die code or other standard method to make a visible indication that a connector has been adequately compressed on grounding conductor.

H. Moisture Protection: If insulated grounding conductors are connected to ground rods or grounding buses, insulate entire area of connection and seal against moisture penetration of insulation and cable.

3.6 UNDERGROUND DISTRIBUTION SYSTEM GROUNDING

A. Duct Banks: Install a grounding conductor with at least 50% ampacity of the largest phase conductor in the ductbank.

B. Manholes and Handholes: Install a driven ground rod close to wall and set rod depth to 4-inches above handhole or manhole floor. If necessary, install ground rod before manhole is placed and provide a No. 1/0 AWG bare, tinned-copper conductor from ground rod into manhole through a waterproof sleeve in manhole wall. Protect ground rods passing through concrete floor with a double wrapping of pressure-sensitive tape or heat-shrunk insulating sleeve from 2-inches above to 6-inches below concrete. Seal floor opening with waterproof, non-shrink grout.

C. Connections to Manhole Components: Connect exposed-metal parts, such as inserts, cable racks, pulling irons, ladders, and cable shields within each manhole or handhole, to ground rod or grounding conductor. Make connections with No. 4 AWG minimum, stranded, hard-drawn copper conductor. Train conductors level or plumb around corners and fasten to manhole walls. Connect to cable armor and cable shields as recommended by manufacturer of splicing and termination kits.

D. Pad-Mounted Transformers and Switches: Install two ground rods and counterpoise circling pad. Ground pad-mounted equipment and noncurrent-carrying metal items associated with substations by connecting them to underground cable and grounding electrodes. Use tinned-copper conductor not less than No. 4/0 AWG for counterpoise and for taps to equipment ground pad. Bury counterpoise not less than 18-inches below grade and 6-inches from the foundation.

3.7 FIELD QUALITY CONTROL

A. See Specification 16920, 3.01, Qualifications, for Independent Third Party Testing organization requirements.

B. Testing: Perform the following field quality control testing:

1. After installing grounding system but before permanent electrical circuitry has been energized, test for compliance with requirements.
2. Test completed grounding system at each location where a maximum ground resistance level is specified, at service disconnect enclosure grounding terminal, and at ground test wells. Measure ground resistance not less than two full days after the last trace of precipitation, and without the soil being moistened by any means other than natural drainage or seepage and without chemical treatment or other artificial means of reducing natural ground resistance. Perform tests by the fall-of-potential method according to IEEE 81.
3. Provide Drawings locating each ground rod and ground rod assembly and other grounding electrodes, identify each by letter in alphabetical order, and key to the record of tests and observations. Include the number of rods driven and their depth at each location and include observations of weather and other phenomena that may affect test results. Describe measures taken to improve test results.
    a. Equipment Rated 500 kVA and Less: 10 ohms.
    b. Equipment Rated 500 to 1,000 kVA: 5 ohms.
    c. Equipment Rated More Than 1,000 kVA: 3 ohms.
    d. Substations and Pad-Mounted Switching Equipment: 5 ohms.
    e. Manhole Grounds: 10 ohms.
4. Excessive Ground Resistance: If resistance to ground exceeds specified values, notify Engineer promptly and include recommendations to reduce ground resistance.

++ END OF SECTION ++

SECTION 16190

SUPPORTING DEVICES

PART 1 - GENERAL

1.1 SCOPE OF WORK

A. Supports, anchors, sleeves, and seals are indicated on the Drawings, schedules, and specified in other Sections of these Specifications.

B. Types of supports, anchors, sleeves and seals specified in this Section include the following:
   1. One-hole conduit straps.
   2. One-hole conduit straps with clamp backs.
   3. Two-hole conduit straps.
   4. Conduit hangers.
   5. I-beam clamps.
   6. Channel clamps.
   7. Round steel rods.
   8. Drop-in anchors.
   9. Wedge type anchor bolts.
   10. Lead expansion anchors.
   11. Toggle bolts.
   12. Wall and floor seals.
   13. Cable supports.
   14. U-Channel strut system.
   15. Sleeves.

1.2 SUBMITTALS

A. Products shall be submitted in accordance with Section 16000, General Electrical Requirements, and elsewhere in the Contract Documents, prior to installation.

B. Shop Drawings: Submit for approval the following:
   1. A copy of this specification section, with addendum updates included, and all referenced and applicable sections, with addendum updates included, with each paragraph check-marked to indicate specification compliance or marked to indicate requested deviations from specification requirements. Check marks (✓) shall denote full compliance with a paragraph as a whole. If deviations from the specifications are indicated, and therefore requested by the CONTRACTOR, each deviation shall be underlined and denoted by a number in the margin to the right of the identified paragraph, referenced to a detailed written explanation of the reasons for requesting the deviation. The ENGINEER shall be the final authority for determining acceptability of

requested deviations. The CONTRACTOR shall furnish equipment and/or services as specified if an exception and/or deviation is rejected. The remaining portions of the paragraph not underlined will signify compliance on the part of the CONTRACTOR with the specifications. Failure to include a copy of the marked-up specification sections, along with justification(s) for any requested deviations to the specification requirements, with the submittal shall be sufficient cause for rejection of the entire submittal with no further consideration.

2. The CONTRACTOR shall submit the preventive maintenance information package as part of the shop drawing submittal package to the ENGINEER for review and approval. **SHOP DRAWING SUBMITTAL PACKAGE WILL NOT BE APPROVED WITHOUT ACCEPTANCE OF PREVENTIVE MAINTENANCE INFORMATION.**

PART 2 - PRODUCTS

2.1 MANUFACTURERS

A. Acceptable Manufacturers: Subject to compliance with requirements, manufacturers offering products which may be incorporated in the work include, but are not limited to, the following: Abbeon Cal Inc., Ackerman Johnson Fastening Systems Inc., Elcen Metal Products Co., Ideal Industries, Inc., Josyln Mfg and Supply Co., McGraw Edison Co., Rawlplug Co. Inc., Star Expansion Co., U.S. Expansion Bolt Co., Allied Tube and Conduit Corp., B-Line Systems, Inc., Greenfield Mfg Co., Inc., Midland-Ross Corp., O-Z/Gedney Div; General Signal Corp., Power-Strut Div.; Van Huffel Tube Corp., and Unistrut Div; GTE Products Corp., and Robroy Industries.

2.2 GENERAL

A. Provide supporting devices that comply with manufacturer's standard materials, design, and construction, in accordance with published product information, and as required for complete installations, and as specified herein.

2.3 SUPPORTS

A. Provide supporting devices of types, sizes, and materials indicated, and having the following construction features:

B. One-Hole Conduit Straps: For supporting electrical metallic tubing, and liquidtight flexible conduit; zinc plated steel, stainless steel or galvanized steel; snap-on, heavy duty.

1. One-Hole Conduit Straps with Clamp Backs: For supporting rigid metal conduit, and intermediate metal conduit; cast galvanized steel.

2. Two-Hole Conduit Straps: For supporting electrical metallic tubing, rigid metal conduit, and intermediate metal conduit; zinc plated steel, stainless steel or galvanized steel.
3. Conduit Hangers: For supporting electrical metallic tubing, rigid metal conduit, and intermediate metal conduit; zinc plated steel, stainless steel or galvanized steel.
4. I-Beam Clamps: Electroplated zinc or hot-dipped galvanized malleable iron.
5. Channel Clamps: Electroplated zinc or hot-dipped galvanized steel.
6. Round Steel Rod: National coarse thread, electroplated.

2.4 ANCHORS

A. Provide anchors of types, sizes, and materials indicated, with the following construction features:
   1. Lead Expansion Anchors: For CMU walls, 1/4-inch-20 threads, set tool required.
   2. Toggle Bolts: Electroplated steel, size as required.
   3. Drop-in Anchors: Stainless steel, size as required.
   4. Anchor Bolts: Stainless steel, size as required.
   5. Half-round head, non-removable anchor bolts shall not be used.

2.5 SEALS

A. Provide seals of types, sizes, and materials indicated, with the following construction features:
   1. Wall and Floor Seals: Provide factory-assembled watertight wall and floor seals, of types and sized indicated; suitable for sealing around conduit, pipe, or tubing passing through concrete floors and walls. Construct seals with steel sleeves, malleable iron body, neoprene sealing grommets and rings, metal pressure rings, pressure clamps, and cap screws.
   2. Conduit sealing bushings shall be manufactured by O-Z/Gedney, Model CSMI, or equal.
   3. The conductor sealing bushings shall be manufactured by O-Z/Gedney, Model CSBG, or equal.

2.6 CONDUIT CABLE SUPPORTS

A. Provide cable supports with insulating wedging plug for non-armored type electrical cables in risers; construct 2-inch rigid metal conduit; 3-wires, type wire as indicated; construct body of malleable-iron casting with hot-dip galvanized finish.

2.7 U-CHANNEL STRUT SYSTEM

A. Provide U-channel strut system for supporting electrical equipment, 12 gauge hot-dip galvanized steel, of types and sizes indicated; construct with 9/16-inch

diameter holes, 8-inch o.c. on top surface, with the following fittings that mate and match with U-channel:

1. Fixture hangers.
2. Channel hangers.
3. End caps.
4. Beam clamps.
5. Wiring stud.
6. Thinwall conduit clamps.
7. Rigid conduit clamps.
8. Post bases.
9. U-bolts.

2.8 PIPE SLEEVES

A. Provide pipe sleeves from the following:
   1. Steel Pipe: Fabricate from Schedule 40 galvanized steel pipe; remove burrs.

2.9 PVC COATED U-CHANNEL STRUT SYSTEM

A. Provide PVC Coated U-channel strut system for supporting electrical equipment, 20 mil PVC coated steel, of types and sizes indicated; construct with 9/16-inch diameter holes, 8-inch o.c. on top surface, with all stainless steel hardware, and the following fittings that mate and match with PVC coated U-channel:
   1. PVC coated strut nut.
   2. PVC coated pipe straps.
   3. Touch up compound (gray).

2.10 STAINLESS STEEL U-CHANNEL STRUT SYSTEM

A. Provide stainless steel U-channel strut system for supporting electrical equipment, of types and sizes indicated; construct with 9/16-inch diameter holes, 8-inch o.c. on top surface, with all stainless steel hardware, and the following stainless steel fittings that mate and match with stainless steel U-Channel:
   1. Fixture hangers.
   2. Channel hangers.
   3. End caps.
   4. Beam clamps.
   5. Wiring stud.
   6. Post bases.
   7. Rigid conduit clamps.
   8. U-bolts.

PART 3 - EXECUTION

3.1 INSTALLATION

A. Install hangers, anchors, sleeves, and seals as indicated, in accordance with manufacturer's written instructions and with recognized industry practices to insure supporting devices comply with requirements. Comply with requirements of NECA and NEC for installation of supporting devices.

B. Coordinate with other electrical work, including raceway and wiring work, as necessary to interface installation of supporting devices with other work.

C. Install hangers, supports, clamps and attachments to support piping properly from building structure. Arrange for grouping of two or more parallel runs of conduits to be supported together on channel type hangers where possible. Install supports with spacing indicated and in compliance with NEC requirements.

D. Torque sleeve seal nuts, complying with manufacturer's recommended values. Ensure that sealing grommets expand to form watertight seal.

E. Comply with manufacturer’s recommendations for touch up of field cut ends or damaged PVC coated U-channel and fittings.

F. Remove burrs and apply a cold zinc galvanizing paint to field cut galvanized U-channel strut.

++ END OF SECTION ++

SECTION 16195

ELECTRICAL IDENTIFICATION

PART 1 - GENERAL

1.1 SCOPE OF WORK

A. Electrical identification work specified in this Section covers the following:
   1. Buried cable warnings.
   2. Electrical power, control and communication conductors.
   3. Operational instructions and warnings.
   4. Danger signs.
   5. Equipment/system identification signs.

1.2 SUBMITTALS

A. Submittals to the ENGINEER shall include the following:
   1. Manufacturer's data on electrical identification materials and products.
   2. Samples of each color, lettering style, and other graphic representation required for each identification material or system.

B. Shop Drawings: Submit for approval the following:
   1. A copy of this specification section, with addendum updates included, and all referenced and applicable sections, with addendum updates included, with each paragraph check-marked to indicate specification compliance or marked to indicate requested deviations from specification requirements. Check marks (✓) shall denote full compliance with a paragraph as a whole. If deviations from the specifications are indicated, and therefore requested by the CONTRACTOR, each deviation shall be underlined and denoted by a number in the margin to the right of the identified paragraph, referenced to a detailed written explanation of the reasons for requesting the deviation. The ENGINEER shall be the final authority for determining acceptability of requested deviations. The CONTRACTOR shall furnish equipment and/or services as specified if an exception and/or deviation is rejected. The remaining portions of the paragraph not underlined will signify compliance on the part of the CONTRACTOR with the specifications. Failure to include a copy of the marked-up specification sections, along with justification(s) for any requested deviations to the specification requirements, with the submittal shall be sufficient cause for rejection of the entire submittal with no further consideration.
   2. The CONTRACTOR shall submit the preventive maintenance information package as part of the shop drawing submittal package to the ENGINEER for review and approval. **SHOP DRAWING SUBMITTAL PACKAGE**

WILL NOT BE APPROVED WITHOUT ACCEPTANCE OF PREVENTIVE MAINTENANCE INFORMATION.

1.3 MANUFACTURERS

A. Subject to compliance with requirements, manufacturers offering electrical identification products maybe incorporated in the Work include, but not limited to, the following:
   1. Brady, W.H. Co.
   2. Ideal Industries, Inc.
   3. Panduit Corp.
   4. Or equal.

1.4 QUALITY COMPLIANCE

A. Comply with applicable requirements of UL Std. 969, "Marking and Labeling Systems", pertaining to electrical identification systems.

B. Comply with applicable requirements of NEMA Std. No's WC-1 and WC-2 pertaining to identification of power and control conductors.

PART 2 - PRODUCTS

2.1 GENERAL

A. Except as otherwise indicated, provide manufacturer's standard products of categories and types required for each application. Where more than single type is specified for an application, selection is installer's option, but provide single selection for each application.

2.2 COLOR-CODED CONDUIT MARKERS

A. Provide manufacturer's standard pre-printed, flexible or semi-rigid, permanent, plastic-sheet conduit markers, extending 360 degrees around conduits; designed for attachment to conduit by adhesive, adhesive lap joint of marker, matching adhesive plastic tape at each end of marker, or pretensioned snap-on. Except as otherwise indicated, provide lettering that indicates voltage of conductor(s) in conduit. Provide 8-inches minimum length for 2-inch and smaller conduit, 12-inches length for larger conduit.

B. Unless otherwise indicated or required by governing regulations, provide white markers with black letters.

2.3 CABLE AND CONDUCTOR WIRE MARKERS

A. Cable and conductor wire markers shall be self laminating vinyl on white background, printed using a Seton printer, a Brady TLS2200 printer or equal. Handwritten wire markers are not acceptable.

2.4 SELF-ADHESIVE PLASTIC SIGNS

A. Provide manufacturer's standard, self-adhesive or pressure-sensitive, pre-printed, flexible vinyl signs for operational instructions or warnings; of sizes suitable for application areas and adequate for visibility, with proper wording for each application, e.g., 208 V, EXHAUST FAN, RECTIFIER.

B. Unless otherwise indicated or required by governing regulations, provide white signs with black lettering.

2.5 LETTERING AND GRAPHICS

A. Coordinate names, abbreviations and other designations used in electrical identification work, with corresponding designations shown, specified or scheduled. Provide numbers, lettering and wording as indicated or, if not otherwise indicated, as recommended by manufacturers or as required for proper identification and operation/maintenance of electrical systems and equipment. Comply with ANSI A13.1 pertaining to minimum sizes for letters and numbers.

PART 3 - EXECUTION

3.1 INSTALLATION

A. Install electrical identification products as indicated, in accordance with manufacturer's written instructions and requirements of NEC.

B. Where identification is to be applied to surfaces that require finish, install identification after completion of painting.

C. Comply with governing regulations and requests of governing authorities for identification of electrical work.

3.2 CONDUIT IDENTIFICATION

A. Where electrical conduit is exposed in spaces with exposed mechanical piping that is identified by a color-coded method, apply color-coded identification on electrical conduit in manner similar to piping identification. Except as otherwise indicated, use white as coded color for conduit.

3.3 CABLE/CONDUCTOR IDENTIFICATION

A. Apply cable/conductor identification, including voltage, phase and feeder number, on each cable/conductor in each box/enclosure/cabinet where wires of more than one circuit or communication/signal system are present, except where another form of identification (such as color-coded conductors) is provided. Match identification with marking system used in panelboards, shop drawings, contract documents, and similar previously established identification for Project's electrical work.

3.4 EQUIPMENT/SYSTEM IDENTIFICATION

A. Install engraved plastic-laminate sign on each major unit of electrical equipment in building; including central or master unit of each electrical system including communication-control-signal systems, unless unit is specified with its own self-explanatory identification or signal system. Except as otherwise indicated, provide single line of text, 1/2-inch high lettering on 1-1/2-inch high sign (2-inch high where two lines are required), white lettering in black field. Provide text matching terminology and numbering of the contract documents and shop drawings. Provide signs for each unit of the following categories of electrical work:
   1. Panelboards, electrical cabinets and enclosures.
   2. Access panel/doors to electrical facilities.
   3. Major electrical switchgear.

B. Install signs at locations indicated or, where not otherwise indicated, at location for best convenience of viewing without interference with operation and maintenance of equipment. Secure to substrate with brass or stainless steel screws, except use adhesive where screws should not or cannot penetrate the substrate.

3.5 CIRCUIT IDENTIFICATION

A. The 3-phase wires shall be identified at the switchgear, panelboards and motor control centers as Phases A, B, and C. At 277/480 VAC, Phase A shall be brown, Phase B shall be orange, and Phase C shall be yellow. The neutral shall be gray.

B. In addition to color coding all conductors, each conductor shall be identified in each pull box, manhole, panelboard, cable tray, or termination with circuit identification markers. This identification is applicable to all power, control, alarm, and instrumentation conductors and these markings shall be recorded on the Record Documents. Markers shall be slip-on PVC sleeve type as manufactured by Brady, Seton, or equal.

C. Markers for other cabling shall be B-292 vinyl as manufactured by Brady, Seton, or equal.

D. Exposed medium voltage conduits shall be labeled at 50 foot intervals with 1-inch letters stating the voltage - example – "12,470 volts". Labels shall be vinyl plastic as manufactured by Brady, Seton, or equal.

3.6 AUTOMATIC EQUIPMENT WARNING SIGNS

A. Permanent warning signs shall be mounted at all mechanical equipment that may be started automatically or from remote locations. Signs shall be in accordance with OSHA Regulations and shall be suitable for exterior use. The warning signs shall be fastened with round head brass screws or bolts, located and mounted in a manner acceptable to the ENGINEER.

B. Warning signs shall be 7-inches high by 10-inches wide, colored yellow and black, on not less than 18 gauge vitreous enameling stock. Sign shall read:

CAUTION
THIS EQUIPMENT STARTS
AUTOMATICALLY
BY REMOTE CONTROL

3.7 HIGH VOLTAGE WARNING SIGNS

A. Permanent and conspicuous warning signs shall be mounted on all equipment, doorways to equipment rooms, pull boxes, manholes, where the voltage exceeds 600 volts.

B. Signs shall be in accordance with OSHA regulation, and shall be suitable for exterior use. The warning signs shall be fastened with round head brass screws or bolts, located and mounted in a manner acceptable to the ENGINEER.

C. Signs shall be 7-inches high by 10-inches wide, colored red and white, on not less than 18 gauge vitreous enameling stock. Sign shall read:

WARNING
HIGH VOLTAGE
KEEP OUT

3.8 CONDUCTOR FASTENERS

A. Glue-on type conductor fasteners shall not be used in any panels, panelboards, switchboards, switchgear, motor control centers, or other enclosures containing electrical devices and/or conductors.

++ END OF SECTION ++

SECTION 16225

ELECTRIC MOTORS 250 HORSEPOWER OR LESS

PART 1 - GENERAL

1.1 DESCRIPTION

A. Scope:
   1. This Section includes alternating current induction motors, 250 horsepower or less, to be provided with the driven equipment. Unless specified otherwise, electric motors shall be provided by the manufacturer of the driven equipment under an assumption of unit responsibility. This Section refers to motors by enclosure type as defined in NEMA MG 1, except as noted.

B. Horsepower Rating:
   1. Motor horsepower ratings noted in individual equipment Specifications are estimates only and it is the responsibility of CONTRACTOR to furnish motors, electric circuits, and other equipment of ample horsepower capacity to operate the equipment furnished without exceeding the manufacturer's nameplate full-load current at rated manufacturer's nameplate voltage. Full-load current information shall be furnished with the individual submittals.

1.2 QUALITY ASSURANCE

A. General: Motors shall be built in accordance with UL 674, UL 1004, NEMA Standard MG 1, and to the requirements specified.

B. Reference Standards: Comply with applicable provisions and recommendations of the following, except as otherwise shown or specified. In case of conflict between the requirements of this Section and those of the listed documents, the requirements of this Section shall prevail.
   1. AFBMA 9: Load Rating and Fatigue Life for Ball Bearings.
   2. AFBMA 11: Load Ratings and Fatigue Life for Roller Bearings.
   3. IEEE 112: Standard Test Procedures for Polyphase Induction Motors and Generators.
   4. IEEE 841, Standard for Petroleum and Chemical Industry - Totally Enclosed Fan Cooled (TEFC) Squirrel Cage Induction Motors - Up to and Including 500 HP.
   5. NEMA ICS 2: Industrial Control Devices, Controllers and Assemblies.
   6. NEMA ICS 6: Enclosures for Industrial Controls and Systems.
   7. NEMA 250, Enclosures for Electrical Equipment (1000 volts maximum).
   8. NEMA MG 1: Motors and Generators.

9. NEMA MG1-31: Application Considerations for Constant Speed Motors Used on a Sinusoidal Bus with Harmonic Content and General Purpose Motors Used with Adjustable-Voltage or Adjustable- Frequency Controls or Both.
10. UL.674: Electric Motors and Generators for Use in Class I Division I Hazardous Locations
11. UL 1004: Electric Motors.

C. Factory Tests:
1. The manufacturer's factory motor Prototype Tests per IEEE Standard 112 Appendix-A on motors through 250 horsepower shall be submitted as Product Data for the motor, and actual factory tests for motors are not required:
   a. Winding resistance in ohms and converted to 25 degree C.
   b. Resistive Unbalance and Quarter Voltage Impedance, as applicable.
   c. Locked-Rotor current (Single phase).
   d. High Potential.
   e. No-Load Excitation (volts, amperes, RPM).
   f. Bearing vibration check.
   g. Efficiency, Power Factor, Current at 115%, 100%, 75%, 50%, and no load.

D. Warranty:
1. Motors ½ horsepower and greater shall be warranted against defects in materials and workmanship for a period of 5 years under the specified uses and with normal operation and service. This warranty shall be delivered, in writing, to the Owner and shall include, as a minimum, 100 percent full payment coverage for parts and labor during the first 60 months of operation.

1.3 SUBMITTALS

A. Submittals shall include the following:
1. Shop Drawings: Submit for approval the following:
   a. A copy of this specification section, with addendum updates included, and all referenced and applicable sections, with addendum updates included, with each paragraph check-marked to indicate specification compliance or marked to indicate requested deviations from specification requirements. Check marks (✓) shall denote full compliance with a paragraph as a whole. If deviations from the specifications are indicated, and therefore requested by the CONTRACTOR, each deviation shall be underlined and denoted by a number in the margin to the right of the identified paragraph, referenced to a detailed written explanation of the reasons for requesting the deviation. The ENGINEER shall be the final authority for determining acceptability of requested deviations. The CONTRACTOR shall furnish equipment and/or services as specified if an exception and/or deviation

is rejected. The remaining portions of the paragraph not underlined will signify compliance on the part of the CONTRACTOR with the specifications. Failure to include a copy of the marked-up specification sections, along with justification(s) for any requested deviations to the specification requirements, with the submittal shall be sufficient cause for rejection of the entire submittal with no further consideration.

b. The CONTRACTOR shall submit the preventive maintenance information package as part of the shop drawing submittal package to the ENGINEER for review and approval. **SHOP DRAWING SUBMITTAL PACKAGE WILL NOT BE APPROVED WITHOUT ACCEPTANCE OF PREVENTIVE MAINTENANCE INFORMATION.**

2. Manufacture completed IEEE Standard 841 Date Sheet for AC Squirrel Cage Induction Motors with required factory data of motors supplied.
3. Speed-Torque curve per 1.2 C Factory Tests.
4. Factory Test Data: Including Guaranteed Minimum Efficiency for 115% load, 100% load, 75% load, 50% load, and no load.
5. Guaranteed vibration level when measured per MG 1, Figure 7-6:
   a. Displacement: 0.0025 inch peak-to-peak
   b. Velocity: 0.10 inches per second peak
   c. Acceleration: 1g (gravity) peak.
6. Motor heating curve for motors per 1.2 C Factory Tests.
7. Motor outline, dimensions, and weight.
8. Manufacturer's descriptive information relative to motor features.
9. Response curve where a winding over-temperature device is required.
10. For all inverter duty motors: Manufacturer's certification that the motor is compatible with the adjustable frequency drive to be used.
11. Disassembly and repair documentation.

1.4 POWER SUPPLY VARIATIONS

A. Motors shall operate successfully under running conditions at rated load with +/- 10-percent of rated voltage with rated frequency or +/- 5-percent of rated frequency with rated voltage.

1.5 AMBIENT CONDITIONS

A. Unless specified otherwise, motors shall be suitable for continuous operation at an elevation of approximately 1,200 feet above mean sea level. Motors to be installed outdoors, exposed to the weather, shall be suitable for continuous operation in a 50° C ambient temperature; motors to be installed indoors shall be suitable for continuous operation in 50° C ambient temperature, unless otherwise noted.

1.6 NEMA WINDING TEMPERATURES

A. NEMA MG 1 Table 12-7 motors insulation system maximum winding temperatures in degrees-Centigrade (C), with the degrees-Fahrenheit (F) insulation system class specified herein.
   1. Forty degree-C ambient (104 degree-F) is the basis for temperature rise.
   2. For 50 degree C ambient (122F) and above, refer to the driven equipment specifications for additional requirements.

Insulation System Class	Degrees C / F	Temperature Rise by Resistance
A	140 / 284	NA
B	165 / 329	B-rise: 40 + 80 = 120 Degrees C / 248 F
F	190 / 374	F-rise: 40 + 105 = 145 Degrees C / 293 F
H	215 / 419	H-rise: 40 + 125 = 165 Degrees C / 329 F

1.7 NEMA MOTOR TEMPERATURE PROTECTION TYPES

A. The NEMA design shall limit the temperatures of the windings without using a thermal device:
   1. Type-1: Winding Running and Locked Rotor Over-temperature Protection.
   2. Type-2: Winding Running Over-temperature Protection.

PART 2 - PRODUCTS

2.1 MANUFACTURER'S NAMEPLATES

A. Factory installed manufacturer's nameplates shall be stainless steel with embossed or pre-printed lettering and fastened to the motor frame with Type 316 stainless steel pins. Manufacturer's nameplates shall have stamped on them the motor manufacturer's name, design voltage; number of hertz and phase; horsepower rating; amperage and temperature rise at rated load, full load speed, NEMA code letter, service factor, minimum guaranteed efficiency, model number, AFBMA bearing number, serial number and maintenance manual number in accordance with NEMA MGI-10.40.1.

B. A separate factory installed manufacturer's nameplate shall provide lubrication instructions and a separate manufacturer's nameplate connection diagram for dual voltage motors.

C. Additionally, factory to provide the following information on manufacturer's nameplates or additional manufacturer's nameplates for:

1. Motors 1/2 horsepower and larger: Indicate the ABMA L-10 rated life for the motor bearings.
2. Motors 2 to 50 horsepower: Indicate the NEMA nominal efficiency.
3. Motors 50 horsepower and larger: Indicate NEMA guaranteed minimum efficiency.
4. Explosion-Proof motors: Indicate UL frame temperature limit code.
5. Space heater information.
6. NEMA MG 1 Over Temperature Protection Type Number.

2.2 CONSTRUCTION

A. Unless specified otherwise, all motors provided under this Section shall have the following features of construction and operation:
   1. Motor voltage, speed and enclosures are specified in the detailed equipment Specifications. Motors furnished with equipment shall comply with this Section.
   2. All motors shall be of the motor manufacturer's premium energy-efficient design, different from manufacturer's standard product through the use of premium materials, design and improved manufacturing process that reduces motor losses approximately 40 percent from standard efficient designs.
   3. Motor efficiency shall be determined in accordance with NEMA Standard MG1-12.54.1 and guaranteed minimum full load efficiency labeled on manufacturer's motor nameplate in accordance with NEMA Standard MG1-12.54.2 or MG1-10.40.1 below.
   4. Minimum efficiencies shall not be less than those listed in Paragraph 2.4.E., below.
   5. All motors shall successfully operate under power supply variations in accordance with NEMA MG1-14.30.
   6. All motors shall be NEMA Design B with torque and starting currents in accordance with NEMA MG1-12.35 and 12.37, except in special applications requiring higher starting torques where NEMA Design C is permitted.
   7. All motors shall have a 1.15 service factor. Polyphase integral horsepower motors shall be sized so that, under maximum load conditions imposed by the driven equipment, for the conditions specified, the manufacturer's motor nameplate rated horsepower and Class B temperature rise will not be exceeded. Motors with a service factor of 1.15 shall be selected for operation within their full load rating without applying the service factor.
   8. Each motor shall be of the speed and horsepower specified or required to properly operate the driven equipment, torque characteristics as required by the drive load and suitable for direct coupling or V-belt drive, as shown on the Drawings and specified herein. Motors shall be designed for full voltage starting, unless otherwise specified.
   9. Frames shall be of corrosion-resistant cast iron with integrally cast feet or bases. End bells, conduit box and cover and bases shall be cast iron, with precision machined bearing fits, ASTM Type A-48, Class 25 or better. UL approved automatic stainless steel breather drains shall be provided in the

lowest part of front and back brackets to allow drainage of condensation on TEFC and explosion proof motors.

10. Each stator core assembly shall consist of stacked lamination made from specially selected electrical sheet silicon steel.
11. Insulation materials shall be non-hygroscopic and meet or exceed Class H definition, utilizing materials and insulation systems evaluated in accordance with IEEE 117 classification tests. Motor temperature rating shall not exceed Class F temperature limits as measured by resistance method when the motor is operated at full load at 1.0 service factor continuously in a maximum ambient temperature of 50° C. Windings shall be copper.
12. Rotor cages for motors 50 HP or less shall be die cast aluminum or fabricated copper. Shafts shall be made from carbon steel. Rotor cages for motors larger than 50 HP shall be copper only.
13. Rotors on frames 213T and above shall be keyed shrunk or welded to shaft and rotating assembly dynamically balanced to NEMA limits in accordance with MG1-12.06. Balance weights, if required, shall be secured to the rotor resistance ring or fan blades by rivets. Machine screws and nuts are prohibited. The entire rotating assembly between bearing inner caps shall be coated with a corrosion-resistant epoxy.
14. Bearings shall be ball, open, single row, deep groove, Conrad type, and shall have a Class 3 internal fit conforming to AFBMA Std. 20. For belted duty applications, drive end bearing may be cylindrical roller type. Bearings shall be selected to provide L-10 rating life of 100,000 hours minimum. Calculations shall be based on external loads using NEMA applications limits in accordance with MG1-14.41 and typical sheave weights and internal loads defined by the manufacturer, including magnetic pull and rotating assembly weight.
15. Bearing temperature rise at rated load shall not exceed 60° C. Temperature rise shall be measured by RTD or thermocouple at bearing outer race. Bearing AFBMA identification number shall be stamped on manufacturer's motor nameplate.
16. Motor lubrication system shall consist of a sealed bearing or a grease inlet on motor bracket with capped grease fitting on inlet, grease relief plug 180 degrees from inlet, grease reservoir in bracket and grease reservoir in cast inner cap. Motor shall be greased by manufacturer with a premium moisture resistant polyuria thickened grease containing rust inhibitors and suitable for operation over temperatures from -25° C to 120° C.
17. All bolt and cap screws shall be of high strength, SAE Grade 5 zinc-plated and chromatic steel. Screwdriver slot fasteners are unacceptable.
18. All motor parts including frame, brackets, fan cover and terminal box shall receive a minimum of two coats of high grade USDA accepted epoxy paint. Motor assembly shall successfully withstand salt spray tests for corrosion in accordance with ASTM B-117 for 96 hours.
19. All motors shall be painted the same color as the driven equipment.
20. Two-speed motors shall be two-winding motors. Two-speed, one-winding consequential-pole motors that require special motor starters are prohibited.

2.3 MOTORS LESS THAN 1/2 HORSEPOWER

A. General:
   1. Unless otherwise specified, motors less than 1/2 horsepower shall be squirrel cage, single phase, capacitor start, induction run type. Construction features listed in Paragraph 2.2, above, shall be as normally supplied by the equipment manufacturer. Single phase motors shall have Class B insulation, minimum. Small fan motors may be split-phase or shaded pole type. Windings shall be copper.

B. Rating:
   1. Unless otherwise specified, motors shall be rated for operation at 115 volts, single phase, 60 Hz, and shall be continuous-time rated in conformance with NEMA Standard MG 1, Paragraph 10.35. Dual voltage (115/230) rated motors are acceptable if all leads are brought out to the conduit box. Motors shall be non-overloading at all points of the equipment operation.

C. Enclosures:
   1. Unless otherwise specified, motors shall have totally enclosed fan cooled or totally enclosed non-ventilated enclosures.

2.4 MOTORS 1/2 HORSEPOWER THROUGH 250 HORSEPOWER

A. General:
   1. Unless otherwise specified, motors 1/2 horsepower through 250 horsepower shall be three phase, squirrel cage, full voltage start induction type. Unless otherwise specified, motors shall have a NEMA MG 1-1.16 design letter B or C torque characteristic as required by the driven equipment's starting torque requirements.

B. Rating:
   1. Unless otherwise specified, motors shall be rated for operation at 460 volts, 3 phase, 60 Hz, and shall be continuous time rated in accordance with NEMA Standard MG 1, Paragraph 10.35.
   2. Motors for variable frequency systems shall not be required to deliver more than 80 percent of the motor's service factor rating by any load imposed by the driven machine at any specified operating condition or any condition imposed by the driven machine's performance curve at maximum operating speed.

C. Enclosure and Insulation:
   1. General: Motors shall be classified as Type 1 (Process) and Type 2 (Explosion proof). Enclosures and insulation systems shall be as specified in the following paragraphs. Temperature rise for all motor types shall not exceed that permitted by Note II, Paragraph 12.42, NEMA MG 1. The insulation shall be non-hygroscopic.

a. Type 1 Motors (Process): Type 1 motors shall be premium energy efficient motors, totally enclosed, fan cooled. All motors shall have Class H insulation with Class B temperature rise. Motors shall conform to IEEE 841. All internal surfaces shall be coated with an epoxy paint. Motors shall be rated for corrosive atmosphere duty.
b. Type 2 Motors (Explosion proof): Explosion proof motors shall be UL listed in accordance with UL 674 for Class I, Group D hazardous atmospheres. The motor shall have Class H insulation and shall conform to IEEE 841. Steel frame motors will not be permitted. A UL-approved Type 316 stainless steel breather/drain device shall be provided in the motor drain hole. The motor shall be provided with a frame temperature thermostat which meets the UL frame temperature limit code T2A (280°C). The thermostat shall contain an automatically reset, normally closed contact rated two amperes at 115 volts AC.

D. Motors for Variable Frequency Drives:
1. Motors intended for use with variable frequency drives shall be compatible with the characteristics of the intended variable frequency inverters. Motors shall be Type 1 or Type 2 as specified in the detailed Specification. Insulation for all motors operating with variable frequency drives shall be Class H with Class F temperature rise. Variable frequency drive motors shall be premium energy-efficient motors. Motors shall be capable of withstanding a pulse voltage of at least 1750 volts with a rate of rise up to 750V/micro second. The motors shall be certified by the manufacturer as suitable for inverter duty.
2. All motors connected to variable frequency drives shall be equiped with shaft grounding rings. Shaft grounding devices must be factory installed or installed by a reputable motor shop with the expertise in the proper installation of the devices. If the shaft grounding devices are not factory installed, a third party shall be engaged to test the installation to ensure no damaging shaft currents are present.

E. Minimum Manufacturer's Nameplate Efficiency: Motor minimum manufacturer's nameplate efficiency, determined in accordance with IEEE 112B testing procedures, when operating on a sinusoidal power source shall conform to the following:

HORSEPOWER RANGE	SPEED, RPM		
	1200	1800	3600
1-2	82.5	84.5	82.5
3-5	89.5	88.5	86.5
7-25	90.2	90.2	89.5

30-60	92.4	92.4	89.8
75-250	94.1	93.7	91.7

F. Vertical Motors:
   1. Unless otherwise specified, vertical motors shall be full voltage with a Type P base specifically designed for vertical installation. Universal position motors are not acceptable. Vertical motors shall have solid shafts, unless otherwise specified. Vertical motors shall conform to either Type 1 or Type 2 motor requirements as specified under Paragraph 2.4.C., above. Thrust bearing rating shall be compatible with the loads imposed by the driven equipment.

G. Conduit Boxes:
   1. CAUTION: External conduit boxes on motors shall be sized to accommodate oversized feeder conductors and as shown on the Drawings shall, in any case, not be less than one size larger than NEMA standards. The conduit boxes shall be diagonally split and rotatable in 90 degree steps. A gasket shall be furnished between the conduit box and frame. Motor leads shall be stranded copper wire, Class H or better insulated, non-wicking, with permanent identifications spaced 1-1/2-inches maximum. Clamp type grounding terminals shall be provided in the conduit boxes.

H. Lifting Eyes:
   1. Motors weighing more than 50 pounds shall be fitted with at least one lifting eye.

I. Current Imbalance:
   1. Current imbalance shall not exceed the values tabulated below when the motor is operating at any load within its service factor rating and is supplied by a balanced voltage system.
      a. Under five horsepower: Ten percent
      b. Five horsepower and above: Ten percent
   2. Imbalance criteria shall be based upon the lowest value measured.

2.5 MOTOR TYPES

A. The following Standard motor types shall conform to the following requirements:
   1. Horizontal Dripproof: Provide horizontal motors with an enclosure that meets NEMA Standard MG 1 for open, dripproof construction. Provide screen over all air openings.
   2. Horizontal Totally Enclosed Fan-Cooled: Provide totally enclosed fan-cooled (TEFC) motors with frame sizes 182 and larger with cast iron frames and end shields. Smaller frame sizes may be constructed of rolled steel with cast metal end shields. Provide motors with condensate drain holes. For frame size 286 and larger, provide automatic breather/drain device in drain hole.

3. Vertical Weather Protected Type I: Provide vertical motors with an enclosure that meets NEMA Standard MG 1 for weather protected Type I (WP-I) enclosure. Provide screens over all air openings.
4. Vertical Totally Enclosed Fan-Cooled: Provide vertical motor with an enclosure identical to the requirements for the horizontal TEFC motors.
5. Explosion proof: Provide all horizontal and vertical motors with TEFC explosion proof enclosures, UL listed for Class 1, Division 1, Group D hazardous atmosphere.
6. Submersible: Submersible motors UL listed for explosion proof atmospheres in accordance with subsequent sections of this specification. In addition, provide submersible motors with two mechanical seals; the lower one outside the motor and protecting the upper one, which is in an oil filled chamber. Provide moisture detector probes in the oil filled seal chamber to indicate the presence of moisture in the seal chamber. Provide a temperature detector and switch rated 3 amperes, 120 volts minimum, set to operate when the internal motor temperature exceeds a preset limit. Provide any relays or solid state controls for separate mounting.
7. Horizontal, Totally Enclosed, Fan-Cooled, Severe Duty: Provide horizontal (TEFC), severe duty motors suitable for contaminated environments, including gasketed conduit box, stainless steel drains, double-shielded bearings, and corrosion resistant paint. Provide motors manufactured by Reliance Electric SXT-XT-XE, Century Type SCE E-Plus, or equal.
8. Vertical, Totally Enclosed, Fan-Cooled, Severe Duty: Provide vertical (TEFC), severe duty motors with the requirements identical to horizontal (TEFC), severe duty motors, above.

2.6 PRODUCT DATA

A. The following information shall be provided for each motor in accordance with the individual equipment specification.
   1. Motor outline, dimensions and weight.
   2. Manufacturer’s general descriptive information relative to motor features.
   3. Where a winding over-temperature device is required, provide a response curve for the temperature device.
   4. Applicable operation and maintenance information specified in Section 01730, Operation and Maintenance Data. Provided overhaul instructions for each motor five HP and over.

2.7 ACCEPTABLE PRODUCTS

A. The following manufacturer's motors generally meet the class and performance requirements of this specification when furnished with appropriate modifications and additional features as specified:
   1. General Electric Inc.
   2. Emerson US Motors.
   3. Siemens.

PART 3 - EXECUTIONGROUNDING AND BONDING

A. Verify the circuit ground cable (green) is identified and connected to the grounding lug terminal in the conduit box.

B. Provide supplementary grounding by installing a bond from the motor frame to the grounding electrode system as indicated on the drawings.

4.2 FIELD TESTING

A. Verify breather/drain fittings have been installed as specified herein.

B. Provide winding insulation resistance testing for motors to be witnessed by owner or engineer before connection is complete. Winding insulation resistance shall be not less than 10-megohm measured with a 1000-VAC megohmmeter at 1-minute at or corrected to 40-degree C.

C. Provide motor phases current imbalance testing to be witnessed by owner or engineer.

D. Test motors in accordance with Specification 16920, Electrical Acceptance Testing.

++ END OF SECTION ++

SECTION 16282

SURGE PROTECTIVE DEVICES

PART 1 - GENERAL

1.1 DESCRIPTION

A. Scope:
   1. Provide all labor, materials, equipment and incidentals as shown on the Drawings, specified and required to furnish and install surge protective devices (SPD) as a minimum for all 480 VAC and above panelboards, switchboards and motor control centers above 1,000 amp rating and where shown on the Drawings.
   2. These Specifications describe the electrical and mechanical requirements for a system of electrical surge protective device filter components integrating both surge suppression and electrical high frequency noise filtering.

1.2 QUALITY ASSURANCE

A. Manufacturer's Qualifications:
   1. Manufacturer shall have a minimum of five years experience of producing substantially similar equipment, and shall be able to show evidence of at least five installations in satisfactory operation for at least five years.

B. Referenced Standards. Comply with applicable provisions and recommendations of the following, except as otherwise shown or specified.
   1. ANSI/IEEE (C62.41-1991 and C62.45-2002).
   2. National Electrical Code (NEC) 2011 version.
   3. NFPA (70 [NEC], 75 and 78).
   4. UL Standard No. 248-1, 1283 and 1449 Third Edition.
      a. Each system component shall be UL Standard No. 1283, Listed as an Electromagnetic Interference Filter.
      b. Each system component shall be UL Standard No. 1449, Third Edition, listed as a Surge Protective Device.

1.3 SUBMITTALS

A. Shop Drawings: Submit for approval the following:
   1. Electrical and mechanical drawings for each type of unit that shows electrical ratings, dimensions, weights, mounting provisions, connection details and layout diagrams.
   2. Provide complete copy of Warranty; refer to requirement of paragraph 2.2.G of this Specification.

3. Provide verification that the SPD complies with the required UL Standard No. 1449 VPRs.
4. Provide actual let through voltage test data in the form of oscillograph results for the ANSI/IEEE C62.41 6kV/3kAcombination wave tested in accordance with ANSI/IEEE C62.45.
5. Provide spectrum analysis of each unit based on MIL-STD-220A test procedures between 50 kHz and 200 kHz verifying the device's noise attenuation exceeds 50 dB at 100 kHz.
6. Submit for approval the following:
    a. A copy of this specification section, with addendum updates included, and all referenced and applicable sections, with addendum updates included, with each paragraph check-marked to indicate specification compliance or marked to indicate requested deviations from specification requirements. Check marks (✓) shall denote full compliance with a paragraph as a whole. If deviations from the specifications are indicated, and therefore requested by the CONTRACTOR, each deviation shall be underlined and denoted by a number in the margin to the right of the identified paragraph, referenced to a detailed written explanation of the reasons for requesting the deviation. The ENGINEER shall be the final authority for determining acceptability of requested deviations. The CONTRACTOR shall furnish equipment and/or services as specified if an exception and/or deviation is rejected. The remaining portions of the paragraph not underlined will signify compliance on the part of the CONTRACTOR with the specifications. Failure to include a copy of the marked-up specification sections, along with justification(s) for any requested deviations to the specification requirements, with the submittal shall be sufficient cause for rejection of the entire submittal with no further consideration.
    b. The CONTRACTOR shall submit the preventive maintenance information package as part of the shop drawing submittal package to the ENGINEER for review and approval. **SHOP DRAWING SUBMITTAL PACKAGE WILL NOT BE APPROVED WITHOUT ACCEPTANCE OF PREVENTIVE MAINTENANCE INFORMATION.**

B. Operation and Maintenance Manuals:
1. Submit complete installation, operation and maintenance manuals including test reports, maintenance data and schedules, description of operation and spare parts information. Provide complete copy of Warranty. Refer to requirements of paragraph 2.2.G of this Specification.
2. Submit complete Operation and Maintenance Manuals in conformance with the Operation and Maintenance Manuals section of Section 01300, Submittals.

PART 2 - PRODUCTS

2.1 GENERAL

A. Unit Operating Voltage: The operating voltage shall be as shown on the Drawings.

B. Maximum Continuous Operating Voltage (MCOV): The MCOV shall be greater than 115 percent of the nominal system operating voltage.

C. Protection Modes: For a wye configured system, the device must have directly connected suppression elements between line-neutral (L-N), line-ground (L-G), and neutral-ground (N-G). For a delta configured system, the device must have suppression elements between line to line (L-L) and line to ground (L-G).

D. The maximum UL Standard No. 1449 VPR for the device must not exceed the following:
   1. Line to Neutral: 1200 volts.
   2. Line to Ground: 1200 volts.
   3. Neutral to Ground: 1200 volts.
   4. Line to Line: 2000 volts.

E. Surge Current Capacity: For branch applications, total surge current per phase (based on an 8x20 microsecond waveform) that the device is capable of surviving shall not be less than 250 kA per phase, or 125 kA per mode on L-G, L-N and N-G modes (Wye system); L-L and N-G (Delta system).

F. Let through voltage at the Motor Control Center Stabs: Upon request, the manufacturer must provide suppression test results measured at the motor control center bucket stabs.

2.2 DESIGN

A. Each circuit shall include arrays of fused Metal Oxide Varistors (MOV) to suppress voltage surges.

B. Balanced Suppression Platform: The surge current shall be equally distributed to all MOV components to ensure equal stressing and maximum performance. The surge suppression platform must provide equal impedance paths to each matched MOV. Designs incorporating SPD modules which do not provide a balanced impedance path to each MOV shall not be acceptable.

C. Electrical Noise Filter: Each unit shall include a high performance EMI/RFI noise rejection filter. Noise attenuation for electric line noise shall be 55 dB at 100 kHz using the MIL-STD-220A insertion loss test method. The unit shall be complimentary listed to UL Standard No. 1283. Products not able to demonstrate noise attenuation of 55 dB @ 100 kHz shall be rejected.

D. Internal Connections: No plug-in component modules or printed circuit boards shall be used as surge current conductors. All internal components shall be hardwired with connections utilizing low impedance conductors and compression fittings.

E. Safety and Diagnostic Monitoring. Each unit shall be equipped with 200 kAIC internal fuses. Each unit shall provide the following three levels of monitoring:
   1. Continuous monitoring of fusing system.
   2. Internal infrared sensor system for monitoring individual MOVs (including neutral to ground). The system must be capable of identifying open circuit failures not monitored by conventional fusing systems.
   3. Thermal detection circuit shall monitor for overheating in all modes due to thermal runaway.

F. A green/red solid state indicator light shall be provided on each phase. The absence of a green light and the presence of a red light; shall indicate which phase(s) have been damaged. Fault detection will activate a flashing trouble light. Units will not be accepted if they cannot detect open circuit damage, thermal conditions, and over current.

G. Warranty: The manufacturer shall provide a full five year warranty from the Date of Shipment against any SPD part failure when installed in compliance with manufacturer's written instructions and National Electrical Code.

H. Product and Manufacturer: Provide one of the following:
   1. Joslyn Electronic Systems Company.
   2. Square "D" Company.
   3. Liebert.
   4. Current Technology.

2.3 ACCESSORIES

A. The unit must be equipped with surge event counter and audible alarm.

B. Remote Status Monitor. The SPD device must include Form C dry contacts (one N.O. and one N. C.) for remote annunciation of unit status to Computer Control System. The remote alarm shall change state if any of the three monitoring systems described detect a fault condition.

C. Push-To-Test Feature. Each suppression unit shall incorporate an integral test feature which verifies the operational integrity of the unit’s monitoring system.

PART 3 - EXECUTION

3.1 INSTALLATION

A. Suppressors shall be installed inside the motor control center at the manufacturer's factory.

B. To facilitate removal and inspection, the suppressor shall be mounted within a standard motor control center bucket.

C. The suppressor shall be mounted in a standard 12-inch NEMA 1 compartment. Conductor length between the suppressor and the stab shall be less than 5-inches. All units shall be internally fused with 200 kAIC. All status indicators and monitors shall be mounted on the front of the motor control center compartment for easy visibility.

++ END OF SECTION ++

SECTION 16305

5KV CLASS CABLE

PART 1 - GENERAL

1.1 SCOPE OF WORK

A. This specification covers single conductor 5,000 volt shielded copper power cable insulated with an ozone and discharge resistance flexible, rubber-like thermosetting dielectric for medium voltage applications which shall be suitable for use in wet and dry locations in conduit, cable tray, underground ducts, direct burial and aerial installations.

1.2 SUBMITTALS

A. Products shall be submitted to the Engineer for review in accordance with Section 01600 of the Specifications and other Contract Documents.

B. Product technical data including:
   1. Acknowledgment that products submitted meet requirements of standards referenced.
   2. Manufacturer's installation instructions.
   3. Complete catalog data showing compliance with complete Specifications.

C. Test reports:
   1. The switchgear terminations manufacturer shall, upon request, furnish test reports which verify device stability with time, temperature, and stress variations.
   2. Motor connection kits:
      a. Meet or exceed the AC withstand and impulse requirements of IEEE 404 stand for power cable splices. Manufacturer shall provide test reports demonstrating compliance with this standard.
   3. When assembled on cables, the splice shall be capable of passing the electrical test requirements of IEEE 48, IEEE 404, and water immersion tests of IEEE 386. Splice manufacturer shall provide a test report demonstrating compliance with the above test requirements.

D. Licenses And Training
   1. High Voltage Construction License (A-17).
   2. Certificates of training for their installers.

E. Drawings showing exact cable routing.

1.3 QUALITY ASSURANCE

A. Association of Edison Illuminating Engineers (AEIC).

B. Insulated Cable Engineers Association (ICEA) and National Electrical Manufacturers Association (NEMA):
   1. S-68-516/WC 8 Ethylene-Propylene Rubber - insulated wire and cable for transmission and distribution of electrical energy.

C. Institute of Electrical and Electronics Engineers:
   1. IEEE - 48: Standard test procedures and requirements for high-voltage alternating-current table.
   2. IEEE - 400: Guide for making high-direct-voltage tests on power cable systems in the field.
   3. IEEE - 386: Standard for separable insulated connector systems for power distribution systems above 600 V.
   4. IEEE - 404: Standard for cable joints for use with extruded dielectric cable rated 5000 V through 46,000 V and cable joints for use with laminated dielectric cable rated 2500 V through 500,000 V.

D. National Electrical Code (NEC)

E. Underwriters' Laboratories (U.L.)
   1. UL 1072, Standard for Safety Medium-Voltage power cables.

PART 2 - PRODUCT

2.1 5KV CLASS CABLE

A. The cables shall be single-conductors for 90 degrees C continuous normal operation. They shall be constructed as follows: Conductor shall be stranded, Class B, annealed copper, covered with an extruded semi-conducting EPR strand screen, 140-mil ethylene propylene insulation, extruded EPR semi-conducting insulating screen, 5-mil bare copper shielding tape with 12½ percent minimum overlap, 60-mil overall flame retardant PVC or chloro-sulfonated polyethylene jacket (80-mil for 1/0 size or larger). They shall be rated 5 kV, type MV-105, with 133 percent insulation level. Conductor screen, insulation and insulation screen shall be extruded simultaneously. The insulation shall be distinctively different color from the insulation screen.

B. Cables shall be manufactured as per the applicable ICEA S68-516 and AEIC CS-86 standards. When in conflict, the more stringent test shall apply. The completed cables shall be tested for corona discharge per AEIC requirements. A copy of the original X-Y plot showing discharge levels shall be submitted with the certified test reports.

C. The pulling tension and side-wall pressures, as recommended by the cable manufacturer, shall not be exceeded. Pull boxes located as indicated on the Drawings are based on nominal pulling tension and side-wall pressures. Additional pull boxes shall be installed, as required, to meet the cable manufacturer's recommendations.

D. The EP insulation must contain no polyethylene polymer as a component. The ethylene content of any of the EP rubbers used in the insulation must not exceed 72% by weight ethylene. Both features to limit the degree of susceptibility of "treeing" experienced by highly crystalline materials.

E. The cable manufacturer shall have a minimum of 15 years proven and successful experience with the manufacturing of EPR insulated cables at the facility from which the cable will be made.

F. Each reel of cable furnished shall be newly manufactured, (no more than 12 months old), and shall bear a tag containing name of manufacturer, NEC designation and year of manufacture.

G. Other parts of the cable system such as joints and terminations shall have ratings not less than the rating of the cables on which they are installed. Separable insulated connectors shall have nominal voltage ratings coordinated to associated apparatus ratings rather than cable ratings when used to connect cable to apparatus.

H. Shields shall be applied as required to continue the shielding system through each entire cable joint. Shields may be integrally molded parts of performed joints. Shields shall be grounded at each joint. Separable insulated connectors of suitable construction or standard splice kits shall be used. Splice kits may be of the heat-shrinkable type for the rated voltage. Cable joints shall provide insulation and jacket equivalent to that of the associated cable.

I. Five kV cable shall be manufactured by Okonite, or equal.

PART 3 - EXECUTION

3.1 INSTALLATION

A. Install cables in reinforced concrete underground chases or ducts as indicated on the Drawings.

B. Coordinate work with other trades in order to avoid complications and interference.

C. Installation shall be such to readily provide for future expansions.

D. The cables shall be installed as per manufacturers recommendation with appropriate equipment. Cables shall not be pulled with a truck, automobile, or similar equipment which may exceed the manufacturer's recommended cable specifications. The Contractor shall replace the cables at no cost to owner if such happens.

E. The installing Contractor must be licensed for High Voltage Construction (A-17).

3.2 5KV CABLE TESTS

A. Test cables in accordance with Specification 16920 – ELECTRICAL ACCEPTANCE TESTING.

B. All reels of new cable shall be given a post delivery hi-potential DC insulation test in accordance with NETA-ATS 2003 to prove the cables are acceptable prior to installation. Cable shall be installed on reels such that both ends are exposed and available for testing. Replace any cable failing the test.

3.3 SWITCHGEAR TERMINATIONS (5 KV CLASS CABLE)

A. Terminations shall be stress cones type. Termination kits supplied shall be capable of properly terminating single conductor polymeric-insulated cable. Kits shall meet Class I requirements and be design proof tested per IEEE 48-1975 and be capable of passing a test sequence per draft and revisions of IEEE 404-1986. Kits as specified shall accommodate any common form of cable shielding/construction without the need for special adapters and accessories, and shall accommodate a wide range of cable sizes and, also, be capable of being properly installed on out-of-round or out-of-tolerance cable as per relevant ICEA standards. Kits shall accommodate commercially available connectors.

B. Terminations for single conductor cables shall consist of heat shrinkable stress control and outer nontracking insulation tubings along with a high relative permitivity stress relief mastic for insulation shield cutback treatment with a heat activated sealant for environmental sealing. Three conductor kits shall contain necessary materials to seal the cable jacket, phase conductors, and any ground wires, as well as rejacket phase and ground conductors.

C. The manufacture shall, upon request, be able to demonstrate fifteen years of actual field experience and suitable accelerated and real-time testing of weather resistance. Test reports shall also be available, upon request, which verify device stability with time, temperature, and stress variations.

D. Termination kits shall be manufactured by Raychem Corporation, or equal.

3.4 MOTOR TERMINATIONS (5 KV CLASS CABLE)

A. All feeder cable connections to unshielded motor leads shall be insulated and sealed with factory engineered kits. Motor connection kits shall consist of heat-shrinkable, corona resistant, polymeric insulating materials and a high dielectric strength mastic to seal the ends against ingress of moisture and contamination. Bolt connection area shall be kept fee of mastics and fillers to facilitate rapid stripping and re-entry.

B. Motor connection kits shall accommodate a range of cable sizes for both inline and stub type configurations. All connection kits shall be independent of cable manufacturer's tolerances.

C. Motor connection kits shall meet or exceed the AC withstand and impulse requirements of IEEE 404-1986 standard for power cable splices. Manufacturer shall provide test reports demonstrating compliance with this standard.

D. Motor connection kits shall be manufactured by Raychem Corporation, or equal.

3.5 SPLICES (5 KV CLASS CABLE)

A. In general, cables shall be run without splices between termination to equipment. Splices shall be made only when authorized by the Engineer and only where cables have to be cut to meet manufacturer's pulling tension requirements.

B. Power cable splices for shielded solid dielectric plastic cables shall be factory engineered kits containing all necessary components to reinstate primary cable insulation, metallic shielding, grounding system and overall jacket to the equivalent of the cable itself.

C. Splices shall be of a uniform cross section heat-shrinking polymeric construction utilizing a high dielectric strength insulating layer. The insulating layer shall be bonded to a conducting layer for shielding. The splice shall be rejacketed with a heavy-wall, heat-shrinkable lined sleeve to provide a waterproof hot melt adhesive seal.

D. The splice shall accommodate a range of cable sizes and be completely independent of cable manufacturer's tolerances.

E. When assembled on cables, the splice shall be capable of passing the electrical test requirements of IEEE 48-1975, IEEE 404-1986, and water immersion tests of ANSI C119.2-1974.

F. Splice manufacturer shall provide a test report demonstrating compliance with the above test requirements.

G. Splices shall be manufactured by Raychem Corporation, or equal.

3.6 GUARANTEE

A. Fully guarantee all work under this Section, for a period of TWENTY YEARS from the date of final acceptance by the Owner, against imperfect workmanship or failure or malfunction of materials due to faulty or imperfect workmanship. Give this guarantee in writing to the Owner at the time of issuing final certificate. Work found to be defective within this period shall be replaced without cost to the Owner.

3.7 ACCEPTANCE

A. As a condition precedent to final acceptance of the work, the Contractor shall certify the material and installation included under this section to be free of defects, and suitable for trouble-free operation under the conditions set forth in these manufacturer's guarantee.

++ END OF SECTION ++

SECTION 16321

OIL FILLED SUBSTATION TRANSFORMERS

PART 1 - GENERAL

1.1 DESCRIPTION

A. This section covers liquid filled substation transformer(s) and its installation.

1.2 REFERENCES

A. ANSI C57.12.00 - Liquid Filled Transformers

B. ANSI/IEEE C57.12.27 - Liquid Filled Transformers

C. ANSI/IEEE C57.12.90 - Liquid Filled Transformers

D. ASTM D877 - Liquid Filled Transformers Testing

1.3 SUBMITTALS

A. Products shall be submitted to the Engineer in accordance with Section 16000 and other Contract Documents.

PART 2 - PRODUCTS

2.1 ACCEPTABLE MANUFACTURERS

A. The substation transformer(s) shall be manufactured by Square D, ABB, Eaton, or equal.

2.2 SUBSTATION TRANSFORMER

A. Minimum transformer ratings shall be as follows: Also refer to single line diagrams.

kVA Rating	**750**
Impedance	5.75%
Primary Voltage	4160
Secondary Voltage	480
HV BIL	60kV
HV Taps	± 2%
LV BIL	10kV
Noise	65dB

B. The transformer shall carry its continuous rating with average winding temperature rise by resistance that shall not exceed 65 degrees C temperature rise, based on average ambient of 30 degrees C over 24 hours with a maximum ambient of 40 degrees C. The insulation system shall allow an additional 12% kVA output at 65 degrees C average winding temperature rise by resistance, on a continuous basis, without any decrease in normal transformer life.

C. Transformer shall include all devices, wiring, fans and auxiliary equipment necessary for automatic temperature controlled forced air cooling to obtain an additional 15% capacity on units 750 through 2000 kVA. Control power for fans shall be 120V AC, furnished from a control transformer in the unit substation low voltage switchgear assembly.

D. The transformer(s) shall be the substation type with side-wall mounted primary and secondary terminations. Coolant and insulating fluid shall be inhibited mineral oil. Terminations shall be side-wall mounted for close-coupling to high and low voltage switch-gear sections. Bushing location and phase rotation shall be coordinated with primary and secondary switchgear to provide correct alignment when switchgear and transformer are connected in the field.

E. The transformer shall be designed to carry short time emergency overloads in accordance with ANSI C57.92 and NEMA TR 98 as applicable. Duration and magnitude of designed withstand capability shall be as outlined in ANSI C57.12 and the latest draft of the IEEE Short Circuit Test Code.

F. All windings shall be Copper.

G. The main transformer tank and attached components shall be designed to withstand pressures 25% greater than the required operating design value without permanent deformation. Construction shall consist of carbon steel plate reinforced with external sidewall braces. All seams and joints shall be continuously welded.

H. Each radiator assembly shall be individually welded and receive a quality control pressurized check for leaks. The entire tank assembly shall receive a similar leak test before tanking. A final six hour leak test shall be performed after the transformer is tanked, welded and completed to ensure that there are no leaks before shipment from the factory.

I. Each transformer shall be painted utilizing an initial phosphatizing cleaning treatment, followed by a baked-on epoxy primer. Transformers are outdoor type. Accessories are to include the following:
   1. Combination drain and filter valve and sampling device.
   2. De-energized tap changer, externally operated, cover mounted operating handle.
   3. Pressure test connection.
   4. 1-inch filling plug and filter press connection in cover thermometer, dial type, with alarm contacts.
   5. Liquid level gauge, with low level alarm contacts.

6. Provision for lifting.
7. Provision for jacking.
8. Instruction nameplate.
9. Ground Pad.
10. Pressure vacuum gauge.
11. Welded-on main tank cover.

J. As a minimum, perform the following tests. All tests shall be in accordance with the latest revision of ANSI Test Code C47.12.90 and/or NEMA TR1 and in accordance with the requirements of Specification 16920 – ELECTRICAL ACCEPTANCE TESTING:
   1. Resistance measurements of all windings on the rated voltage connection of each unit and at the tap extremes of one unit only of a given rating on this project.
   2. Ratio tests on the rated voltage connection and on all tap connections.
   3. Polarity and phase-relation tests on the rated voltage connections.
   4. No-load loss at rated voltage on the rated voltage connection.
   5. Exciting current at rated voltage on the rated voltage connection.
   6. Impedance and load loss at rated current on the rated voltage connection of each unit.
   7. Temperature Test or tests shall be conducted on one transformer unit. When a transformer is supplied with auxiliary cooling equipment to provide more than one kVA rating, temperature tests as listed above shall be made on the lowest kVA OA or AA rating and the highest kVA FA rating.
   8. Applied potential test.
   9. Induced potential tests.

K. Results of the above tests including no load loss data shall be submitted with final drawings in the form of certified test reports.

PART 3 - EXECUTION

3.1 EXAMINATION

A. Inspect to confirm that all items and accessories are in accordance with specifications and Drawings.

B. Verify field measurements are as shown on Shop Drawings.

3.2 INSTALLATION

A. Installation of equipment shall be such that sufficient access and working space is provided for ready and safe operation and maintenance.

B. Install equipment on concrete pad, as indicated on drawings. Coordinate exact pad dimensions with equipment furnished.

C. Transformer(s) shall be mounted on concrete pads. Units shall be carefully installed so as not to scratch finishes. After installation, finished surfaces shall be inspected and

scratches touched up with a finish furnished by the manufacturer especially for this purpose.

D. Concrete pads shall be constructed as indicated. Tops of concrete pads shall be level and shall project 4 inches above finished grade and sloped to drain. Conduits for primary, secondary, and grounding conductors shall be set in place prior to pouring of concrete pads.

3.3 FIELD INSPECTION AND TESTS

A. Provide the services of an authorized representative of the equipment manufacturer to make site visits to supervise the field testing and installation to be performed by the Contractor. The manufacturer's representative shall state in writing that the equipment has been correctly installed and tested.

B. Test in accordance with Specification 16920, Electrical Acceptance Testing.

C. The manufacturer's representative shall supply results of all factory and field tests in writing for submittal to the ENGINEER.

D. The manufacturer shall supply test results to confirm that the transformer assembly design has been tested to substantiate conformance with the applicable ANSI and NEMA Standards.

E. Touch-up paint all chips and scratches with manufacturer-supplied paint and leave remaining paint with Owner.

++ END OF SECTION ++

SECTION 16341

MEDIUM VOLTAGE LOAD INTERRUPTER SWITCHGEAR

PART 1 - GENERAL

1.1 SCOPE OF WORK

A. This Section covers medium voltage load interrupter switchgear for installation in existing Motor Control Center. This equipment shall be manufactured by the manufacturer of the Motor Control Center, and will be installed by the Contractor.

1.2 REFERENCES

A. ANSI/IEEE C37.20.3 - Standard for Metal-Enclosed Interrupter Switchgear (latest edition).

B. ANSI/IEEE C37.20.4 - Standard for Indoor AC Medium-Voltage Switches used in Metal-Enclosed Switchgear (latest edition).

C. ANSI/IEEE 24 - Standard Performance Characteristics and Dimensions for Outdoor Apparatus Bushings (latest edition).

D. ANSI/IEEE 48 - Standard Test Procedures and Requirements for High-Voltage Alternating-Current Cable Terminations (latest edition).

E. National Electric Code.

F. Other standards indicated herein.

1.3 SUBMITTALS

A. Products shall be submitted to the Engineer for review in accordance with the Contract Documents.

B. Shop Drawings: Submit for review three (3) copies of manufacturer's technical information for equipment proposed for use. Submittals shall include the following:
   1. Dimensional information of all components and unit substation assembly
   2. Single-line diagrams.
   3. Wiring diagram for all control wiring.
   4. Technical specifications.
   5. Catalog cuts.
   6. Time current curves for fuses and circuit breakers.
   7. Master drawing index.
   8. Front view elevation.

9. Floor plan.
10. Top view.
11. Nameplate schedule.
12. Component list.
13. Conduit entry/exit locations.
14. Assembly ratings including:
    a. Short-circuit rating.
    b. Voltage.
    c. Continuous current.
    d. Basic Impulse level.
15. Major component ratings including:
    a. Voltage.
    b. Continuous current.
    c. Interrupting ratings.
16. Cable terminal sizes.
17. Busway connection.
18. Connection details between close-coupled assemblies.
19. Key interlock scheme drawing and sequence of operations.

C. Submit three (3) copies of the following information for record purposes:
    1. Final as-built drawings and information for items listed above.
    2. Wiring diagrams.
    3. Certified production test reports.
    4. Installation information including equipment anchorage provisions.

1.4 QUALIFICATIONS

A. The manufacturer of the assembly shall be the manufacturer of the major components within the assembly.

B. For the equipment specified herein, the manufacturer shall be ISO 9000, 9001 or 9002 certified.

C. The manufacturer of this equipment shall have produced similar electrical equipment for a minimum period of five (5) years. When requested by the Engineer, an acceptable list of installations with similar equipment shall be provided demonstrating compliance with this requirement.

PART 2 - PRODUCTS

2.1 GENERAL

A. The metal enclosed load interrupter switchgear assemblies shall consist of dead-front, completely metal enclosed vertical sections containing load interrupter switches and fuses of the number, rating and type noted on the Drawings or

specified herein. The metal enclosed switchgear assemblies shall meet the requirements of ANSI Standard C37.20.3, and NEMA Standards SG5 and SG6, and shall have the following minimum ratings:

1. Nominal System Voltage: 4.16 kV three phase, four wire
2. System Grounding: Solid.
3. Maximum Design Voltage: 4.76 kV.
4. Basic Impulse Level: 60 kV.
5. Bus Continuous Current: 1200 Amperes.
6. Momentary Current: 61 kA.
7. Three Second Current: 35 kA.

B. The load interrupter switches shall be quick-make, quick-break three pole, and gang operated. Each switch shall meet the requirements of ANSI Standard C37.20.4 and shall have the following minimum ratings:

1. Maximum Design Voltage: 4.76 kV.
2. Basic Impulse Level: 60 kV.
3. Continuous and Load Interrupting Current: 600 Amperes.
4. Momentary Current: 61 kA
5. (Switch Closed, 10 cycle): 80 kA Asym.
6. Fault Close Current: 61 kA Asym.
7. Two Second Current: 38 kA

C. The load interrupter switch shall have a manual over toggle type mechanism that does not require the use of a chain or a cable for operation, and utilizes a heavy duty coil spring to provide opening and closing action. The speed of opening and closing the switch shall be independent of the operator, and it shall be impossible to tease the switch into any intermediate position.

D. The interrupter switch shall have separate main and break contacts to provide maximum endurance for fault close and load interrupting duty. The interrupter switch shall have insulating barriers between each phase and between the outer phases and the enclosure. A maintenance provision shall be provided for slow closing the switch to check switch blade engagement and slow opening the switch to check operation of the arc interrupting contacts.

E. The manufacturer of the switchgear assemblies and load interrupter switches shall be the same, to ensure a completely coordinated design and establish one source of responsibility for the equipment's performance.

2.2 CONSTRUCTION

A. The following features shall be supplied on every vertical section containing a three pole, two position open-closed switch:

1. A high impact viewing window that permits full view of the position of all three switch blades through the closed door.
2. The door shall be interlocked with the switch so that:

a. The switch must be opened before the door can be opened.
b. The door must be closed before the switch can be closed.

3. A grounded metal barrier in front of every switch to prevent inadvertent contact with any live part, yet allow for a full-view inspection on the switch blade position.
4. Provision for padlocking the switch in the open or closed position.
5. Permanent "Open-Closed" switch position indicators.

B. Fault protection shall be furnished by fuses as shown in the Contract Documents. The fuses shall have a minimum interrupting rating of 63,000 amperes symmetrical at 5.5 kV and shall be current limiting type. Furnish three spare fuses for each fused switch and provide a storage rack on the inside of the main door for these spare fuses.

C. Vertical section construction shall be of the universal frame type using die-formed and bolted parts. All enclosing covers and doors shall be fabricated from not less than 11-gauge steel. Top cover shall be removable. Rear covers shall be bolted on.

D. Each vertical section containing a switch shall have a single, full length, flanged front door and shall be equipped with two rotary latch type padlockable handles. Provision shall be made for operating the switch and storing the removable handle without opening the full length door. A nameplate shall be mounted on the front door of the switch vertical section.

E. Prior to assembly, all enclosing steel shall be thoroughly cleaned and phosphatized. A powder coating shall be applied electrostatically, then fused on by baking in an oven. The coating is to have a thickness of not less than 2 mils. The finish color shall be ANSI-49 or ANSI-61 Gray.

F. Each outdoor vertical section shall have a sloped weatherproof roof. All openings shall be screened to prevent the entrance of small animals, and barriered to inhibit the entrance of snow, sand, etc. A minimum of one 250 watt, 120 volt space heater shall be provided in each vertical section. Power for the space heater(s) shall be furnished by the transformer mounted within the switchgear assembly.

2.3 TESTS

A. In accordance with Specification 16920, Electrical Acceptance Testing.

2.4 ADDITIONAL EQUIPMENT

A. Mechanical Interlocks: The high-voltage compartment door shall be mechanically interlocked to prevent opening with the load interrupter switch in the closed position. The interlock must be directly attached to the operating handle and mechanism and should not rely on long cables or linkages.

B. 5 kV station class surge arresters shall be provided, connected at the incoming terminations, one per phase, and securely grounded to the metal structure. The surge arresters shall be manufactured by Ohio Brass, or equal.

C. The utility metering vertical sections shall contain current transformers and voltage transformers as required by the utility. It shall conform in all areas to the utility company metering standards including arrangement and size.

D. Provide power for all devices used in switchgear using voltage transformers.

E. Incoming Cable Terminations: Matching existing MCC terminations.

F. Double clamping lugs for terminating cables onto the switchgear terminal pads.

G. Space Heaters: For 120 VAC internal source, sized by the manufacturer, with thermostats.

PART 3 - EXECUTION

3.1 INSTALLATION (BY CONTRACTOR)

A. Installation of equipment shall be such that sufficient access and working space is provided for ready and safe operation and maintenance.

B. Install equipment on concrete pad, as indicated on drawings. Coordinate exact pad dimensions with equipment furnished. Tops of concrete pads shall be level and shall project 4 inches above finished grade and sloped to drain. Conduits for primary, secondary, and grounding conductors shall be set in place prior to pouring of concrete pads.

C. Switchgear shall be mounted on concrete pads. Units shall be carefully installed so as not to scratch finishes. After installation, finished surfaces shall be inspected and scratches touched up with a finish furnished by the manufacturer especially for this purpose.

3.2 FIELD INSPECTION AND TESTS

A. Provide the services of an authorized representative of the switchgear equipment manufacturer to make site visits to supervise the field testing and installation to be performed by the Contractor. The manufacturer's representative shall state in writing that the equipment has been correctly installed and tested.

B. Test in accordance with Specification 1692, Electrical Acceptance Testing.

C. Perform any other tests recommended by the equipment manufacturer and other tests as described in this specification.

D. The manufacturer's representative shall supply results of all factory and field tests in writing for submittal to the OWNER.

3.3 TRAINING

A. The switchgear manufacturer shall be responsible for providing two (2) two-hour sessions of on-site training for up to ten (10) operation and maintenance personnel in each session. Training sessions shall be scheduled to accommodate night-shift personnel. Provide training and reference manuals to each trainee. Training shall include as a minimum proper use of safety gear when servicing switchgear, review of recommended testing procedures, proper de-energizing procedures and Kirk key operation, and proper fuse replacement procedures. Training shall be scheduled prior to final acceptance of the equipment, and following energizing and testing of switchgear. All training shall be video taped and delivered to the Owner within one (1) week of the training sessions.

++ END OF SECTION ++

SECTION 16430

CUSTOMER POWER METERING SYSTEM

PART 1 - GENERAL

1.1 SCOPE OF WORK

A. This Specification covers the customer power monitoring system installed on the service entrance section(s), motor control center(s), and other distribution panel(s) as indicated on Plans.

1.2 SUBMITTALS

A. Products shall be submitted in accordance with Section 16000, General Electrical Requirements, and elsewhere in the Contract Documents, prior to installation.

B. Submit manufacturer's catalog cut sheet indicating all options to be supplied as specified herein.

C. Submit Shop Drawing indicating wiring connection diagram and elevation drawing indicating location of component(s) on the service entrance section.

D. Submit complete Operation and Maintenance Manuals in conformance with the Operation and Maintenance Manuals section of Section 01300, Submittals.

1.3 MANUFACTURER

A. Acceptable Manufacturers:
   1. Square D, Eaton Cutler-Hammer, ABB or Engineer approved equal.

PART 2 - PRODUCTS

2.1 GENERAL

A. The system shall consist of electronic circuit monitors as required to obtain signals as specified herein. Components shall include CTs, PTs, CPT, etc, and other devices as required.
   1. The electronic Circuit Monitors shall report metering values such as frequency, temperature, current, voltage, power factor, power, demand current, and real power, and accumulated energy.
   2. Each Circuit Monitor shall retain historical circuit data, time and date, set-up and configuration values, and diagnostics data in the event of a control power failure without the need for an internal battery.

3. Each Circuit Monitor shall be capable of capturing current and voltage waveforms which may be exported to a personal computer where waveform or other power quality analysis may be performed.
4. The Circuit Monitor shall include an LED readout which will allow local display of the following electrical parameters:
    a. Current, per phase RMS.
    b. Voltage, phase-to-phase and phase-to-neutral.
    c. Real power, 3-phase total.
    d. Reactive power, 3-phase total.
    e. Apparent power, 3-phase total.
    f. Power factor, 3-phase total and per phase.
    g. Frequency.
    h. Peak demand current, per phase.
    i. Peak demand, real power.
    j. Accumulated energy (MWH and MVARH).
5. Reset the following electrical parameters shall also be allowed from the front of the Circuit Monitor:
    a. Peak demand current.
    b. Peak demand power.
    c. Energy (MWH).
    d. Reactive energy (MVARH).
6. Circuit Monitor setup for system requirements shall be allowed from the front of the Circuit Monitor. Set-up provisions shall include:
    a. CT rating (xxxx:5) – See Drawings
    b. PT rating (xxxxx:120) – See Drawings
    c. System type (3-wire and 4-wire).
    d. Demand interval (5-60 min.).
7. All reset and functions shall be key switch protected to prevent unauthorized/accidental changes.
8. Unit shall be configured to communicate over Modbus RTU protocol using RS-485 cable network connections with a remote PLC.

B. The system shall have System Display units which display data from the Circuit Monitors. The display unit shall contain the following:
    1. Each System Display shall provide real-time access to all metering data available for each circuit (present as well as historical data).
    2. Each System Display unit shall access and display the data available from selected electronic Circuit Monitors connected on the individual data transfer network.
    3. The System Display unit shall utilize a 4 line by 20 character, high contrast LCD technology display with backlighting to provide high reliability and superior readability in all light conditions.
    4. The level of backlighting as well as the contrast shall be adjustable.
    5. The System Display unit shall allow for easy operation by providing a keypad with large keys for operator selections.

6. The keys shall have a raised perimeter and tactile feedback to ensure a positive response even with gloved hand operation.
7. The keys shall be clearly marked to indicate the function and separated into meaningful groups with display prompting to assist the user in operation.
8. Each System Display unit shall be configured by the manufacturer with all necessary data such as CT ratios, PT ratios, main and feeder device nameplates, demand alarm set points, etc.
9. It shall be possible to change the configuration for each System Display unit using the keypad provided on each display.
10. This capability shall be password protected to prevent unauthorized modification of the configuration.
11. All data with the exception of the captured waveform shall be accessible by the System Display unit.
12. Data shall be displayed in a logically organized manner complete with the proper scaling and units.
13. It shall be possible to sequentially view all available data from a selected Circuit Monitor by single keystroke advancing through the various display pages.
14. It shall be possible to view the same pages of data from other Circuit Monitors by single keystroke advancing back and forth from Circuit Monitor to Circuit Monitor.

PART 3 - EXECUTION

3.1 INSTALLATION

A. System Display units shall be installed by the manufacturer in the switchgear as indicated on the Plans.

B. The System Display units shall be flush mounted on switchgear door panels.

C. Electronic Circuit Monitors shall be installed by the switchgear manufacturer for all circuits as indicated by the project drawings.

D. All control power, CT, PT, and communications wire shall be factory wired and harnessed within the switchgear lineup.

E. Where external circuit connections are required, terminal blocks shall be provided and the manufacturer's drawings must clearly identify the interconnection requirements including wire type to be used.

F. The metering components included within the service entrance sections shall be factory installed, wired, and tested prior to shipment to the job site.

G. All wiring required to externally connect the personal computer shall be installed by the CONTRACTOR per manufacturer's requirements and per other portions of these Specifications.

H. CONTRACTOR interconnection wiring requirements shall be clearly identified on the metering system drawings to be submitted for approval.

3.2 TESTING

A. Test in accordance with Specification 16920, Electrical Acceptance Testing.

3.3 TRAINING

A. On-site start-up and training of the metering system shall be included in the Project bid.

B. Start-up shall include a complete working demonstration of the system with simulation of possible operating conditions which may be encountered.

C. Training shall include any documentation and hands-on exercises necessary to enable operations personnel to assume full operating responsibility for the system after completion of the training period.

D. The Project bid shall include two days start-up assistance and one day training.

++ END OF SECTION ++

SECTION 16432

SERVICE ENTRANCE SECTION LOW-VOLTAGE SWITCHBOARD

PART 1 - GENERAL

1.1 DESCRIPTION

A. Scope:
   1. CONTRACTOR shall provide all labor, materials, equipment, and incidentals required to furnish and install free-standing, dead-front type service entrance section low-voltage switchboard, utilizing group mounted circuit protective devices as specified herein and as shown on the Drawings.

1.2 QUALITY ASSURANCE

A. Manufacturer's Qualifications:
   1. Manufacturer shall have a minimum of five years of experience of producing substantially similar equipment and shall be able to show evidence of at least five installations in satisfactory operation for at least five years.

B. Reference Standards: Comply with applicable provisions and recommendations of the following, except as otherwise shown or specified.
   1. NEMA PB-2
   2. UL Standard No. 891.
   3. National Fire Protection Association 79, Electrical Standards for Industrial Machinery.
   4. Electric Utility Service Equipment Requirements Committee (EUSERC)

C. The manufacturer of the assembly shall be the manufacturer of the circuit protective devices within the assembly.

D. For the equipment specified herein, the manufacturer shall be ISO 9000, 9001 or 9002 certified.

E. The switchboards shall be suitable for and certified to meet all applicable seismic requirements of the Uniform Building Code as supplemented by the City of Chandler, Building Construction Code. Guidelines for the installation consistent with these requirements shall be provided by the switchgear manufacturer and be based upon testing of representative equipment.

1.3 SUBMITTALS

A. Shop Drawings: Submit for approval the following:

1. Manufacturer's technical information for low-voltage distribution switchboards and equipment proposed for use. NFPA 79, Annex "D" Standard elementary and wiring diagrams shall be included. Shop Drawings shall include the following:
    a. Master drawing index.
    b. Front view elevation.
    c. Floor plan.
    d. Top view.
    e. Single line.
    f. Schematic diagram.
    g. Nameplate schedule.
    h. Component list.
    i. Conduit entry/exit locations.
    j. Assembly ratings including:
        1) Short-circuit rating.
        2) Voltage.
        3) Continuous current.
    k. Major component ratings including:
        1) Voltage.
        2) Continuous current.
        3) Interrupting ratings.
    l. Cable terminal sizes.
    m. Certified production test reports.
    n. Wiring diagrams.
    o. Installation information, including seismic certification and equipment anchorage details.
    p. Provide Hazard Risk Category, incident energy & PPE for specific installation as defined by NFPA 70E-2004. Include Hazard Risk Category, incident energy & PPE if an Arc Flash Module is utilized.
    q. Provide submittal to SRP meter shop for approval. Switchboard shall not be released for production prior to SRP approval.
    r. Provide submittal to CIS for approval. Switchboard shall not be released for production prior to receipt of Preliminary Power System Study letter.

B. Where applicable, the following additional information shall be submitted to the ENGINEER:
    1. Busway connection.
    2. Connection details between close-coupled assemblies.
    3. Composite floor plan of close-coupled assemblies.
    4. Key interlock scheme drawing and sequence of operations.

C. Operation and Maintenance Manuals:
    1. Submit complete installation, Operation and Maintenance Manuals, test reports, maintenance data and schedules, description of operation and spare parts information.

2. Furnish Operations and Maintenance Manuals in conformance with requirements of Section 01300.

1.4 PRODUCT DELIVERY, STORAGE AND HANDLING

A. Equipment shall be handled and stored in accordance with manufacturer's instructions. One copy of these instructions shall be included with the equipment at time of shipment.

B. Deliver materials to the site to ensure uninterrupted progress of the Work. Deliver anchor bolts and anchorage devices which are to be embedded in cast-in-place concrete in ample time to prevent delay of the Work.

C. All boxes, crates and packages shall be inspected by CONTRACTOR upon delivery to the site. CONTRACTOR shall notify ENGINEER of any loss or damage exists to equipment or components. Replace loss and repair damage to new condition in accordance with manufacturer's instructions.

D. Store materials to permit easy access for inspection and identification. Keep all materials off the ground, using pallets, platforms, or other supports. Protect steel members and packaged materials from corrosion and deterioration.

PART 2 - PRODUCTS

2.1 RATINGS

A. The assembly shall be rated to withstand mechanical forces exerted during short-circuit conditions when connected directly to a power source having available fault current of 65,000 amperes symmetrical at rated voltage.

B. Voltage, Phase and Wire sizing shall be per Drawings.

2.2 CONSTRUCTION

A. Switchboards shall consist of the required number of vertical sections bolted together to form a rigid assembly. The sides and rear shall be covered with removable bolt-on covers. All edges of front covers or hinged front panels shall be formed. Provide adequate ventilation within the enclosure.

B. All sections of the switchboard shall be rear aligned with depth as shown on the Drawings. All protective devices shall be group mounted. Devices shall be front removable and load connections front accessible enabling switchboard to be mounted against a wall. Rear louvers not permitted.

C. The low-voltage distribution switchboards shall be Service Entrance rated and UL 891 labeled.

D. Product and Manufacturer: Provide Square D, Eaton, ABB, or equal.

2.3 BUS

A. All bus bars shall be tin-plated copper. Main horizontal bus bars shall be mounted with all three phases arranged in the same vertical plane. Bus sizing shall be based on NEMA standard temperature rise criteria of 65°C over a 40°C ambient (outside the enclosure).

B. Provide a full capacity neutral bus where a neutral bus is shown on the Drawings, unless otherwise specified.

C. A tin-plated copper ground bus (minimum 1/4 by 2-inch), shall be furnished firmly secured to each vertical section structure and shall extend the entire length of the switchboard.

D. All hardware used on conductors shall be high-tensile strength and zinc-plated. All bus joints shall be provided with conical spring-type washers.

2.4 WIRING/TERMINATIONS

A. Small wiring, necessary fuse blocks and terminal blocks within the switchboard shall be furnished as required. Control components mounted within the assembly, such as fuse blocks, relays, pushbuttons, switches, etc., shall be suitably marked for identification corresponding to appropriate designations on manufacturer's wiring diagrams.

B. Mechanical-type terminals shall be provided for all line and load terminations suitable for copper or aluminum cable rated for 75°C of the size as shown on the Drawings.

C. Lugs shall be provided in the incoming line section for connection of the main grounding conductor. Additional lugs for connection of other grounding conductors shall be provided as shown on the Drawings.

D. All control wire shall be Type SIS, bundled and secured with nylon ties. Insulated locking spade terminals shall be provided for all control connections, except where saddle type terminals are provided integral to a device. All current transformer secondary leads shall first be connected to conveniently accessible short-circuit terminal blocks before connecting to any other device. All groups of control wires leaving the switchboard shall be provided with terminals blocks with suitable numbering strips. Provide wire markers at each end of all control wiring. The wires shall be color coded conforming to the requirements of NFPA 79.

2.5 MOLDED CASE PROTECTIVE DEVICES

A. Main breakers and feeder circuit breakers of 400 amperes frame and above shall be molded case circuit breakers with microprocessor based trip unit which shall provide adjustable long time pickup and delay, adjustable short time pickup and delay, adjustable instantaneous and adjustable ground fault pickup and delay. The microprocessor trip unit shall be from the same manufacturer as the rest of the switchgear. Interrupting rating shall be 65,000 amps symmetrical.

B. Circuit breakers shall be operated by a toggle-type handle and shall have a quick-make/quick-break over-center switching mechanism that is mechanically trip-free. Automatic tripping of the breaker shall be clearly indicated by the handle position. Contacts shall be non-welding silver alloy, and arc extinction shall be accomplished by means of arc chutes. A push-to-trip button on the front of the circuit breaker shall provide a local manual means to exercise the trip mechanism.

C. Circuit breakers shall have a minimum symmetrical interrupting capacity as shown on the Drawings.

D. Where indicated, circuit breakers shall be current limiting.

2.6 MISCELLANEOUS DEVICES

A. Control power transformers with primary and secondary protection shall be provided, as shown on the Drawings, or as required for serving space heaters.

B. Each section of the switchboard shall be provided with a thermostatically controlled space heater. Power for the space heaters shall be obtained from a control power transformer within the switchboard. Supply voltage shall be 120 VAC.

2.7 NAMEPLATES

A. Nameplates:
   1. Engraved nameplates, mounted on the face of the assembly, shall be furnished for all main, tie and feeder breakers. The nameplates shall be laminated phenolic, engraved to show 1/2-inch high letters, Arial. The letters shall be black with white background, secured with stainless steel screws. The nameplates shall give item designation, equipment served breaker frame size and breaker trip rating.
   2. All control components within the assembly shall be identified in correspondence to appropriate designations on the manufacturer's wiring diagrams.

2.8 FINISH

A. All exterior and interior steel surfaces of the switchboard shall be properly cleaned and provided with a rust-inhibiting phosphatized coating. Color and finish of the switchboard shall be ANSI 61 light gray.

PART 3 - EXECUTION

3.1 FACTORY TESTING

A. The following standard factory tests shall be performed on the equipment provided under this section. All tests shall be in accordance with the latest version of ANSI and NEMA standards.
   1. The switchboard shall be completely assembled, wired, adjusted, and tested at the factory. After assembly, the complete switchboard will be tested for operation under simulated service conditions to ensure the accuracy of the wiring and the functioning of all equipment. The main circuits shall be given a dielectric test of 2200 volts for one minute between live parts and ground, and between opposite polarities. The wiring and control circuits shall be given a dielectric test of 1500 volts for one minute between live parts and ground.

B. The manufacturer shall provide three certified copies of factory test reports.

3.2 INSTALLATION

A. CONTRACTOR shall install all equipment in accordance with the manufacturer's recommendations and instructions, approved Shop Drawings and National Electrical Code.

B. The assembly shall be provided with adequate lifting means and shall be capable of being moved into installation position and bolted directly to CONTRACTOR supplied floor sills to be set level in concrete in accordance with manufacturer's recommendations. All necessary hardware to secure the assembly in place shall be provided by CONTRACTOR.

3.3 FIELD ADJUSTMENTS

A. CONTRACTOR shall perform field adjustments of the protective devices as required to place the equipment in final operating condition. The settings shall be in accordance with the approved short-circuit study, protective device evaluation study and protective device coordination study.

B. Necessary field settings of devices and adjustments and minor modifications to equipment to accomplish conformance with an approved short circuit and protective

device coordination study shall be carried out by CONTRACTOR, at no additional cost to the OWNER.

3.4 MANUFACTURER'S CERTIFICATION

A. A certified test report of all standard production tests shall be available to the ENGINEER, upon request.

3.5 MANUFACTURER'S SERVICES

A. A factory trained representative shall be provided for installation supervision, start-up and test services and operation and maintenance personnel training services. The representative shall make a minimum of 3 visits, minimum 8 hours on-site for each visit, to the site. The first visit shall be for assistance in the installation of equipment. The second visit shall be for checking the completed installation and start-up of the system. The third visit shall be as described under Section 01821, Instruction of Operations and Maintenance Personnel. Manufacturer's representative shall test operate the system in the presence of the ENGINEER and verify that the low-voltage distribution switchboards conform to requirements. Representative shall revisit the job site as often as necessary until all trouble is corrected and the installation is entirely satisfactory.

B. All costs, including travel, lodging, meals, and incidentals, shall be considered as included in CONTRACTOR'S bid price.

++ END OF SECTION ++

SECTION 16440

DISCONNECT SWITCHES

PART 1 - GENERAL

1.1 SCOPE OF WORK

A. This Section covers electrical disconnecting safety switches.

1.2 SUBMITTALS

A. Products shall be submitted in accordance with Section 16000, General Electrical Requirements, and elsewhere in the Contract Documents, prior to installation.

B. Shop Drawings: Submit for approval the following:
   1. A copy of this specification section, with addendum updates included, and all referenced and applicable sections, with addendum updates included, with each paragraph check-marked to indicate specification compliance or marked to indicate requested deviations from specification requirements. Check marks (✓) shall denote full compliance with a paragraph as a whole. If deviations from the specifications are indicated, and therefore requested by the CONTRACTOR, each deviation shall be underlined and denoted by a number in the margin to the right of the identified paragraph, referenced to a detailed written explanation of the reasons for requesting the deviation. The ENGINEER shall be the final authority for determining acceptability of requested deviations. The CONTRACTOR shall furnish equipment and/or services as specified if an exception and/or deviation is rejected. The remaining portions of the paragraph not underlined will signify compliance on the part of the CONTRACTOR with the specifications. Failure to include a copy of the marked-up specification sections, along with justification(s) for any requested deviations to the specification requirements, with the submittal shall be sufficient cause for rejection of the entire submittal with no further consideration.
   2. The CONTRACTOR shall submit the preventive maintenance information package as part of the shop drawing submittal package to the ENGINEER for review and approval. **SHOP DRAWING SUBMITTAL PACKAGE WILL NOT BE APPROVED WITHOUT ACCEPTANCE OF PREVENTIVE MAINTENANCE INFORMATION.**
   3. Submit complete Operation and Maintenance Manuals in conformance with the Operation and Maintenance Manuals section of Section 01300, Submittals.

PART 2 - PRODUCTS

2.1 DISCONNECT SWITCHES

A. Disconnect switches shall be heavy-duty safety switches with a quick-make, quick-break operating mechanism, with full cover interlock, and indicator handle. The disconnect switches shall be furnished with fuses of the size indicated on the DRAWINGS. One set of spare fuses shall be furnished for each fused disconnect switch. Disconnect switches shall be NEMA Type HD heavy duty construction, UL 98 listed.

B. Provide one normally-open and one normally-closed auxiliary contact that indicate the disconnect switch position. Contact shall change state just prior to disconnect switch opening to provide advance indication to VFD.

C. Enclosures shall be rated NEMA 12 for indoor use and NEMA 4X 316 SS for outdoor use, unless otherwise indicated on the Drawings.

D. Disconnect switch handle shall be padlockable.

E. See section 16477 600V fuses for details of required fuses.

F. Disconnect switches in the corrosive areas, shall be NEMA 4X, 316 stainless steel unless otherwise indicated on the Drawings.

G. Disconnect switches shall be as manufactured by Square D, Eaton, or equal.

PART 3 - EXECUTION

3.1 INSTALLATION

A. Disconnect switches shall be installed as indicated on the DRAWINGS.

B. Provide grounding per NEC and Section 16170, Grounding and Bonding.

3.2 TESTING

A. Test in accordance with Specification 16920, Electrical Acceptance Testing.

++ END OF SECTION ++

SECTION 16461

TRANSFORMERS - DRY TYPE

PART 1 - GENERAL

1.1 SCOPE OF WORK

A. This Section covers dry type transformers used for low voltage, single- and 3-phase, power distribution and lighting.

1.2 SUBMITTALS

A. Products shall be submitted in accordance with Section 16000,General Electrical Requirements, and elsewhere in the Contract Documents, prior to installation.

B. Shop Drawings: Submit for approval the following:
   1. A copy of this specification section, with addendum updates included, and all referenced and applicable sections, with addendum updates included, with each paragraph check-marked to indicate specification compliance or marked to indicate requested deviations from specification requirements. Check marks (✓) shall denote full compliance with a paragraph as a whole. If deviations from the specifications are indicated, and therefore requested by the CONTRACTOR, each deviation shall be underlined and denoted by a number in the margin to the right of the identified paragraph, referenced to a detailed written explanation of the reasons for requesting the deviation. The ENGINEER shall be the final authority for determining acceptability of requested deviations. The CONTRACTOR shall furnish equipment and/or services as specified if an exception and/or deviation is rejected. The remaining portions of the paragraph not underlined will signify compliance on the part of the CONTRACTOR with the specifications. Failure to include a copy of the marked-up specification sections, along with justification(s) for any requested deviations to the specification requirements, with the submittal shall be sufficient cause for rejection of the entire submittal with no further consideration.
   2. The CONTRACTOR shall submit the preventive maintenance information package as part of the shop drawing submittal package to the ENGINEER for review and approval. **SHOP DRAWING SUBMITTAL PACKAGE WILL NOT BE APPROVED WITHOUT ACCEPTANCE OF PREVENTIVE MAINTENANCE INFORMATION.**
   3. Submit complete Operation and Maintenance Manuals in conformance with the Operation and Maintenance Manuals section of Section 01300, Submittals.

1.3 QUALITY ASSURANCE

A. ANSI C57.12.01, Dry Type Transformers.

B. ANSI C89.2, Dry Type Transformers.

C. NEMA ST-20, Dry Type Transformers.

D. UL 506, Specialty Transformers.

PART 2 - PRODUCTS

2.1 DISTRIBUTION - LOW VOLTAGE LIGHTING AND POWER

A. Transformers shall be premium high efficiency quiet type, and shall be installed where indicated on the Drawings. The primary winding of the transformers shall have two 2-1/2% taps above and below normal.

B. The transformers shall have a BIL of 10 KV with a temperature class of 185° C for transformers up to 25 KVA, and a temperature class of 220 C for larger transformers.

C. The sound level shall not exceed 44 dBa measured at 5 feet from the transformer after installation. Core and coil assemblies 30 KVA and larger shall be mounted on rubber vibration isolators, designed to reduce harmonics generated noise.

D. Transformers shall be types manufactured by Cutler-Hammer, Square D, Hevi-Duty, or equal.

2.2 FERRO RESONANT ISOLATION TRANSFORMERS

A. Ferro resonant isolation transformers shall be provided where indicated on the Drawings. Regulation shall be +3% for an input range of +10%. Common mode noise rejection shall be better than 120 dB with transverse mode noise rejection better than 60 dB. Voltage spike attenuation shall be better than 250:1.

B. Isolation transformers shall be as manufactured by Shape Magnetronics, Control Concepts, Inc., or equal.

PART 3 - EXECUTION

3.1 INSTALLATION

A. Transformers shall be installed as indicated on the Drawings, and in accordance with the manufacturer's instructions and recommendations. CONTRACTOR shall provide painted metal wall brackets, when required.

B. Grounding shall be provided per NEC and Section 16170, Grounding and Bonding.

3.2 TESTING

A. Test in accordance with Specification 16920, Electrical Acceptance Testing.

++ END OF SECTION ++

SECTION 16470

PANELBOARDS

PART 1 - GENERAL

1.1 RELATED DOCUMENTS

A. Drawings and General Provisions of the Contract, including General and Supplementary Conditions and Division 1, General Requirements, Specification Sections apply to this Section.

1.2 SUMMARY

A. This Section includes load centers and panelboards, overcurrent protective devices, and associated auxiliary equipment rated 600 volt and less for the following types:
   1. Lighting and appliance branch-circuit panelboards.
   2. Distribution panelboards.

1.3 DEFINITIONS

A. EMI: Electromagnetic interference.

B. GFCI: Ground-fault circuit interrupter.

C. RFI: Radio frequency interference.

D. RMS: Root mean square.

E. SPDT: Single-pole, double throw.

F. TVSS: Transient voltage surge suppressor.

1.4 SUBMITTALS

A. Product Data: For each type of panelboard, overcurrent protective device, accessory, and component indicated. Include dimensions and manufacturers' technical data on features, performance, electrical characteristics, ratings, and finishes.

B. Shop Drawings: For each panelboard and related equipment.
   1. Dimensioned Plans, elevations, sections, and details. Show tabulations of installed devices, equipment features, and ratings. Include the following:
      a. Enclosure types and details for types other than NEMA 250, Type 1.
      b. Bus configuration, current, and voltage ratings.

c. Short-circuit current rating of panelboards and overcurrent protective devices.
d. UL listing for series rating of installed devices.
e. Features, characteristics, ratings, and factory settings of individual overcurrent protective devices and auxiliary components.

2. Submit for approval the following:
   a. A copy of this specification section, with addendum updates included, and all referenced and applicable sections, with addendum updates included, with each paragraph check-marked to indicate specification compliance or marked to indicate requested deviations from specification requirements. Check marks (✓) shall denote full compliance with a paragraph as a whole. If deviations from the specifications are indicated, and therefore requested by the CONTRACTOR, each deviation shall be underlined and denoted by a number in the margin to the right of the identified paragraph, referenced to a detailed written explanation of the reasons for requesting the deviation. The ENGINEER shall be the final authority for determining acceptability of requested deviations. The CONTRACTOR shall furnish equipment and/or services as specified if an exception and/or deviation is rejected. The remaining portions of the paragraph not underlined will signify compliance on the part of the CONTRACTOR with the specifications. Failure to include a copy of the marked-up specification sections, along with justification(s) for any requested deviations to the specification requirements, with the submittal shall be sufficient cause for rejection of the entire submittal with no further consideration.
   b. The CONTRACTOR shall submit the preventive maintenance information package as part of the shop drawing submittal package to the ENGINEER for review and approval. **SHOP DRAWING SUBMITTAL PACKAGE WILL NOT BE APPROVED WITHOUT ACCEPTANCE OF PREVENTIVE MAINTENANCE INFORMATION.**
3. Wiring Diagrams: Diagram power, signal, and control wiring and differentiate between manufacturer-installed and field-installed wiring.

C. Manufacturer Seismic Qualification Certification: Submit certification that panelboards, overcurrent protective devices, accessories, and components will withstand seismic forces defined for the Project. Include the following:
1. Basis of Certification: Indicate whether withstand certification is based on actual test of assembled components or on calculation.
2. The term "withstand" means "the unit will remain in place without separation of internal and external parts during a seismic event and the unit will be fully operational after the event".
3. Dimensioned Outline Drawings of Equipment Unit: Identify center of gravity and locate and describe mounting and anchorage provisions.

4. Detailed description of equipment anchorage devices on which the certification is based and their installation requirements.

D. Qualification Data: Submit data for testing agencies indicating that they comply with qualifications specified in Paragraph 1.5 of this Specification.

E. Field Test Reports: Submit written test reports and include the following:
   1. Test procedures used.
   2. Test results that comply with requirements.
   3. Results of failed tests and corrective action taken to achieve test results that comply with requirements.

F. Panelboard Schedules: For installation in panelboards. Submit final versions after load balancing.

G. Submit complete Operation and Maintenance Manuals in conformance with the Operation and Maintenance Manuals section of Section 01300, Submittals. Also include the following:
   1. Manufacturer's written instructions for testing and adjusting overcurrent protective devices.
   2. Time-current curves, including selectable ranges for each type of overcurrent protective device.

1.5 QUALITY ASSURANCE

A. Electrical Components, Devices, and Accessories: Listed and labeled as defined in NFPA 70, Article 100, by a testing agency acceptable to authorities having jurisdiction, and marked for intended use.

B. Comply with NEMA PB 1.

C. Comply with NFPA 70.

1.6 COORDINATION

A. Coordinate layout and installation of panelboards and components with other construction that penetrates walls or is supported by them, including electrical and other types of equipment, raceways, piping, and encumbrances to workspace clearance requirements.

PART 2 - PRODUCTS

2.1 MANUFACTURERS

A. Manufacturers: Subject to compliance with requirements, provide products by one of the following:

1. Panelboards, overcurrent protective devices, controllers, contactors, and accessories:
   a. Square D Company.
   b. Eaton.
   c. Or pre-approved equal.

2.2 FABRICATION AND FEATURES

A. Enclosures: Flush and surface mounted cabinets. NEMA PB 1, Type 1, to meet environmental conditions at installed location.
   1. Outdoor Locations: NEMA 250, Type 3R, with intrusion switch.
   2. Other Wet or Damp Indoor Locations: NEMA 250, Type 4**X**.
   3. Hazardous Areas Indicated on Drawings: NEMA 250, Type 7C.

B. Front: Secured to box with concealed trim clamps. For surface-mounted fronts, match box dimensions; for flush-mounted fronts, overlap box.

C. Hinged Front Cover: Entire front trim hinged to box and with standard door within hinged trim cover.

D. Finish: Manufacturer's standard enamel finish over corrosion-resistant treatment or primer coat.

E. Directory Card: With transparent protective cover, mounted inside metal frame, inside panelboard door.

F. Bus: Hard-drawn copper, 98% conductivity.

G. Main and Neutral Lugs: Mechanical-type suitable for use with conductor material.

H. Equipment Ground Bus: Adequate for feeder and branch-circuit equipment ground conductors; bonded to box.

I. Service Equipment Label: UL labeled for use as service equipment for panelboards with main service disconnect switches.

J. Future Devices: Mounting brackets, bus connections, and necessary appurtenances required for future installation of devices.

K. Isolated Equipment Ground Bus: Adequate for branch-circuit equipment ground conductors; insulated from box.

L. Split Bus: Vertical buses divided into individual vertical sections.

M. Gutter Barrier: Arrange to isolate individual panel sections.

N. Feed-through Lugs: Mechanical type suitable for use with conductor material. Locate at opposite end of bus from incoming lugs or main device.

2.3 PANELBOARD SHORT CIRCUIT RATING

A. Fully rated to interrupt symmetrical short circuit current available at terminals.
   1. Distribution Panelboards shall be rated for 65KAIC.
   2. Lighting and Appliance Branch Circuit Panelboards shall be rated for 22KAIC.

2.4 LOAD CENTERS

A. Overcurrent Protective Devices: Bolt-on, full-module circuit breaker.

B. Conductor Connectors: Mechanical type for main, neutral, and ground lugs and buses.

2.5 LIGHTING AND APPLIANCE BRANCH CIRCUIT PANELBOARDS

A. Branch Overcurrent Protective Devices: Bolt-on circuit breakers, replaceable without disturbing adjacent units.

B. Doors: Front-mounted with concealed hinges; secured with flush latch with tumbler lock; keyed alike.

2.6 DISTRIBUTION PANELBOARDS

A. Doors: Front-mounted, except omit in fused-switch panelboards; secured with vault-type latch with tumbler lock; keyed alike.

B. Main Overcurrent Protective Devices: Circuit breaker as shown on DRAWINGS.

C. Branch Overcurrent Protective Devices shall be one of the following:
   1. For Circuit-Breaker Frame Sizes 125 A and Smaller: Bolt-on circuit breakers.
   2. For Circuit Breaker Frame Sizes Larger Than 125 A: Bolt-on circuit breakers; plug-in circuit breakers where individual positive-locking device requires mechanical release for removal.

2.7 OVERCURRENT PROTECTIVE DEVICES

A. Molded-Case Circuit Breaker: NEMA AB 1, with interrupting capacity to meet available fault currents.
   1. Thermal-Magnetic Circuit Breakers: Inverse time-current element for low-level overloads, and instantaneous magnetic trip element for short circuits. Adjustable magnetic trip setting for circuit breaker frame sizes 250 A and larger.

2. Adjustable Instantaneous-Trip Circuit Breakers: Magnetic trip element with front-mounted, field-adjustable trip setting.
3. Electronic Trip Unit Circuit Breakers: RMS sensing; field-replaceable rating plug; with the following field-adjustable settings:
4. Instantaneous trip.
5. Long- and short-time pickup levels.
6. Long- and short-time time adjustments.
7. Ground-fault pickup level, time delay, and I^2t response.
8. Current-Limiting Circuit Breakers: Frame sizes 400 A and smaller; let through ratings less than NEMA FU 1, RK-5.

B. Molded Case Circuit Breaker Features and Accessories. Standard frame sizes, trip ratings, and number of poles.
1. Lugs: Mechanical style, suitable for number, size, trip ratings, and material of conductors.
2. Application Listing: Appropriate for application; Type SWD for switching fluorescent lighting loads; Type HACR for heating, air-conditioning, and refrigerating equipment.
3. Ground-Fault Protection: Integrally mounted relay and trip unit with adjustable pickup and time-delay settings, push-to-test feature, and ground-fault indicator.

2.8 ACCESSORY COMPONENTS AND FEATURES

A. Accessory Set: Tools and miscellaneous items required for overcurrent protective device test, inspection, maintenance, and operation.

B. Portable Test Set: To test functions of solid-state trip devices without removal from panelboard.

PART 3 - EXECUTION

3.1 INSTALLATION

A. Install panelboards and accessories according to NEMA PB 1.1.

B. Mounting Heights: Top of trim 74-inches above finished floor, unless otherwise indicated.

C. Mounting: Plumb and rigid without distortion of box. Mount recessed panelboards with fronts uniformly flush with wall finish.

D. Panel Schedule: Create a panel schedule to indicate installed circuit loads after balancing panelboard loads. Obtain approval before installing. Use Microsoft

Excel or similar approved software to create this document; handwritten directories are not acceptable.

E. Install filler plates in unused spaces.

F. Wiring in Panelboard Gutters: Arrange conductors into groups and bundle and wrap with wire ties after completing load balancing.

3.2 IDENTIFICATION

A. Identify field-installed conductors, interconnecting wiring, and components; provide warning signs as specified in Section 16195, Electrical Identification.

B. Panelboard Nameplates: Label each panelboard with engraved metal or laminated-plastic nameplate mounted with corrosion-resistant screws.

3.3 CONNECTIONS

A. Install equipment grounding connections for panelboards with ground continuity to main electrical ground bus.

B. Tighten electrical connectors and terminals according to manufacturer's published torque-tightening values. If manufacturer's torque values are not indicated, use those specified in UL 486A and UL 486B.

3.4 FIELD QUALITY CONTROL

A. Prepare for Acceptance Tests as follows:
   1. Test insulation resistance for each panelboard bus, component, connecting supply, feeder, and control circuit.
   2. Test continuity of each circuit.

B. Testing: After installing panelboards and after electrical circuitry has been energized, demonstrate product capability and compliance with requirements.
   1. Procedures: Perform each visual and mechanical inspection and electrical test indicated in NETA ATS, Section 7.5 for switches and Section 7.6 for molded case circuit breakers. Certify compliance with test parameters.
   2. Correct malfunctioning units on-site, where possible, and retest to demonstrate compliance; otherwise, replace with new units and retest.

C. Balancing Loads: After Substantial Completion, but not more than 60 days after Final Acceptance, measure load balancing and make circuit changes as follows:
   1. Measure as directed during period of normal system loading.
   2. Perform load-balancing circuit changes outside normal occupancy/working schedule of the facility and at time directed. Avoid disrupting critical 24 hour

services such as fax machines and on-line data-processing, computing, transmitting, and receiving equipment.

3. After circuit changes, recheck loads during normal load period. Record all load readings before and after changes and submit test records.
4. Tolerance: Difference exceeding 20% between phase loads within a panelboard is not acceptable. Rebalance and recheck as necessary to meet this minimum requirement.

D. Infrared Scanning: After Substantial Completion, but not more than 60 days after Final Acceptance, perform an infrared scan of each panelboard. Remove panel fronts so joints and connections are accessible to portable scanner.
   1. Follow-up Infrared Scanning: Perform an additional follow-up infrared scan of each panelboard 11 months after date of Substantial Completion.
   2. Instrument: Use an infrared scanning device designed to measure temperature or to detect significant deviations from normal values. Provide calibration record for device.
   3. Record of Infrared Scanning: Prepare a certified report that identifies panelboards checked and describes scanning results. Include notation of deficiencies detected, remedial action taken, and observations after remedial action.

3.5 ADJUSTING

A. Set field-adjustable switches and circuit breaker trip ranges.

3.6 CLEANING

A. On completion of installation, inspect interior and exterior of panelboards. Remove paint splatters and other spots. Vacuum dirt and debris; do not use compressed air to assist in cleaning. Repair exposed surfaces to match original finish.

++ END OF SECTION ++

SECTION 16474

MOTOR CONTROL EQUIPMENT

PART 1 - GENERAL

1.1 SUMMARY

A. Section includes separately mounted combination motor starters (including those supplied with equipment), manual motor starters, separately mounted circuit breakers, and relays.

B. Related Sections include, but are not necessarily limited to:
   1. Division 0, Bidding Requirements, Contract Forms, and Conditions of the Contract.
   2. Division 1, General Requirements.
   3. Section 16000, Electrical: Basic Requirements.
   4. Section 16170, Grounding and Bonding.

1.2 QUALITY ASSURANCE

A. Referenced Standards:
   1. American National Standards Institute (ANSI):
      a. C62.41, Guide for Surge Voltages in Low Voltage AC Power Circuits.
   2. Canadian Standards Association (CSA).
   3. Institute of Electrical and Electronics Engineers (IEEE).
   4. National Electrical Manufacturers Association (NEMA):
      a. ICS 2, Industrial Control Devices, Controllers, and Assemblies.
      b. 250, Enclosures for Electrical Equipment (1000 Volt Maximum).
   5. National Fire Protection Association (NFPA):
      a. 70, National Electrical Code (NEC).
   6. Underwriters Laboratories, Inc. (UL):
      a. 845, Electric Motor Control Centers.

B. Miscellaneous:
   1. Verify motor horsepower loads, other equipment loads, and controls from approved shop drawings and notify ENGINEER of any discrepancies.
   2. Verify the required instrumentation and control wiring for a complete system and notify ENGINEER of any discrepancies.

1.3 SUBMITTALS

A. Shop Drawings:
   1. See Section 01300, Submittals, and Section 16000, ABB/General Electrical Requirements.
   2. Submit for approval the following:

a. A copy of this specification section, with addendum updates included, and all referenced and applicable sections, with addendum updates included, with each paragraph check-marked to indicate specification compliance or marked to indicate requested deviations from specification requirements. Check marks (✓) shall denote full compliance with a paragraph as a whole. If deviations from the specifications are indicated, and therefore requested by the CONTRACTOR, each deviation shall be underlined and denoted by a number in the margin to the right of the identified paragraph, referenced to a detailed written explanation of the reasons for requesting the deviation. The ENGINEER shall be the final authority for determining acceptability of requested deviations. The CONTRACTOR shall furnish equipment and/or services as specified if an exception and/or deviation is rejected. The remaining portions of the paragraph not underlined will signify compliance on the part of the CONTRACTOR with the specifications. Failure to include a copy of the marked-up specification sections, along with justification(s) for any requested deviations to the specification requirements, with the submittal shall be sufficient cause for rejection of the entire submittal with no further consideration.

b. The CONTRACTOR shall submit the preventive maintenance information package as part of the shop drawing submittal package to the ENGINEER for review and approval. **SHOP DRAWING SUBMITTAL PACKAGE WILL NOT BE APPROVED WITHOUT ACCEPTANCE OF PREVENTIVE MAINTENANCE INFORMATION.**

3. Typical wiring diagrams for all control equipment.

B. Operation and Maintenance Manuals:
1. See Section 01300, Submittals.

PART 2 - PRODUCTS

2.1 ACCEPTABLE MANUFACTURERS

A. Subject to compliance with the Contract Documents, the following manufacturers are acceptable:
1. Combination Motor Starters:
a. ABB/ABB/General Electric.
b. Square D.
c. Eaton Cutler Hammer/Westinghouse.
d. Siemens.
2. Manual Motor Starters:
a. ABB/General Electric.
b. Square D.
c. Cutler Hammer/Westinghouse.

d. Siemens.

3. Separately Mounted Circuit Breakers:
   a. ABB/General Electric.
   b. Siemens.
   c. Square D.
   d. Cutler Hammer/Westinghouse.

B. Submit requests for substitution in accordance with the General Conditions.

C. For control relays, electronic timers, timing relays, terminal blocks and surge protection blocks, see specification 16161.

2.2 COMPONENTS

A. Main and Feeder Circuit Breakers - Separately Mounted: Unless specified otherwise in DRAWINGS, provide as below –
   1. Molded case thermal magnetic or solid state trip type, with minimum interrupting rating equal to the main bus fault current rating:
   2. Circuit breaker frame sizes 150 A and less:
      a. Non-interchangeable, non-adjustable thermal magnetic trip units.
   3. Circuit breaker frame sizes 225 A and higher:
      a. Interchangeable and adjustable thermal magnetic trip units.
   4. Circuit breaker frame sizes 600 A and greater:
      a. Solid state trip units, unless otherwise noted on the Drawings.
      b. Current sensor or rating plug.
      c. Adjustable current setting: Minimum range 70% to 100% of current sensor or rating plug.
      d. Adjustable instantaneous pickup: Minimum range 3 to 8 times.
      e. On circuit breakers 1,000 A and larger provide integral ground fault protection.
         1) Adjustable pick-up.
         2) Adjustable delay.
   5. All circuit breakers to be provided with padlocking provision in the OFF position for up to three padlocks.
   6. Thermal capability:
      a. Frame size 800 amp continuous and below:
      b. Shall be provided for use at 80% of their continuous rating unless otherwise indicated on the Drawings.
      c. Frame size 1,000 amp continuous and above:
         1) Shall be UL listed for application in their intended enclosure for 100% of their continuous rating.
         2) Wiring associated with these circuit breakers shall have a dry location maximum operating temperature of 90° C.

   7. The breakers shall be operated by a handle and shall have a switching mechanism that is mechanically trip free from the handle, so that the contacts

cannot be held closed against short circuits, and abnormal currents. Tripping due to overload, or short circuit shall be clearly indicated by the handle automatically assuming a position between the manual ON and OFF positions. Latch surfaces shall be ground and polished. Poles shall be constructed so that they open, close, and trip simultaneously.

8. Breakers must be completely enclosed in a molded case. Non-interchangeable trip breakers shall have their covers sealed; interchangeable trip breakers shall have the trip unit sealed to prevent tampering. Ampere ratings shall be clearly visible. Contacts shall be non-welding silver alloy. Arc extinction must be accomplished by means of arc chutes. The minimum interrupting ratings of the circuit breakers shall be at least equal to the available short circuit current at the line terminals.

9. Circuit breakers shall conform to the applicable requirements of NEMA Standards Publication No. AB1.

10. Molded case circuit breakers shall be ambient temperature compensating that provides inverse time delay overload and instantaneous short circuit protection by means of a thermalmagnetic element. Compensation shall be accomplished by a secondary bi-metal that will allow the breaker to carry rated current between 25° C and 50° C with tripping characteristics that are approximately the same throughout this temperature range.

11. On breakers with interchangeable, thermal, adjustable magnetic trip, the accessibility and position of the adjustment knob shall not be changed from those on the standard breaker.
12. Unless mounted in a switchboard, or panelboard, circuit breakers shall be housed in a NEMA rated enclosure as described elsewhere in these specifications.

B. Combination Motor Starters:
   1. Circuit breaker shall be motor circuit protector (MCP) type.
   2. Contactor shall be NEMA rated.
      a. One-half size and IEC sized starters not permitted.
   3. Operating handle shall clearly indicate whether circuit breaker is ON, OFF, or TRIPPED.
      a. Provide means to lock each circuit breaker handle in OFF position with cover closed by means of up to three padlocks.
      b. Interlock so that circuit breaker must be in OFF position before door can be opened. Provide defeater mechanism for use by authorized personnel.
   4. Provide starter unit with ambient compensated, external manually resettable, three bimetallic type overload relays. Coordinate size with actual motor full load current.

a. For motors with power factor correction capacitors size heater elements to compensate for the capacitors effect on load current.

5. Provide heavy-duty oil tight selector switches, pushbuttons, push-to-test pilot lights, or other devices, as indicated on the Drawings. These devices will be accessible with the door closed.
6. Provide each starter with two extra field reversible NO auxiliary contacts for future use and as shown on the Drawings.
7. Provide each starter with 480/120 V control power transformer fused on primary and secondary side, and rated for 140% of required load.
8. Provide six-digit readout elapsed time meter where indicated on Drawings.
9. Starter units will have the same fault current withstand rating as the MCC main bus fault current withstand rating from which they are fed.
10. Provide each starter with the following status signals, wired to terminal boards.
    a. Motor run contact (N.O.).
    b. Motor stop contact (N.C.).
    c. Auxiliary overload relay contact (N.O.).

C. Electronic Overload Relays

1. Electronic overload relays shall be provided with the motor starters. The overload relay shall be a 3-pole solid state device that monitors all three phases of the motor current. The unit shall detect overcurrent, phase current imbalance, phase loss, and trip after an adjustable time from three seconds to 30 seconds.
2. The overload relay shall be Class 10, 600 volt rated, ambient temperature compensated, and shall have an LED trip indicator. The unit shall have a manual and automatic reset feature, and a normally closed contact for control.
3. Each module shall provide individual trip indication and reset for each trip condition, visible without opening the motor control center compartment door. Provide a normally open auxiliary contact for remote trip indication.
4. Solid state circuits shall be completely protected from damage arising from line transients and voltage spikes.

D. Magnetic Motor Starters

1. Starters, Size 2 and larger, shall have arc quenchers on all load breaking contacts. Starters shall be suitable for the horsepower ratings specified. The CONTRACTOR shall verify the motor ratings, and coordinate the starter and overload trip ratings with the actual horsepower ratings of the motors installed. Extended overload reset buttons shall be mounted so as to be accessible for operation without opening the door of the enclosure.
2. Magnetic contactors shall be factory adjusted and shall be chatter free. Overload relays shall be electronic, as specified herein.
3. Provide each starter with two extra field reversible NO auxiliary contacts for future use and as shown on the Drawings.

4. Starters shall be furnished complete with a 120 volt control power transformer rated for 140% of required load. Control circuit fuses shall be furnished both on the primary and secondary of the control circuit transformer. If there is no transformer, all live control power supply wires shall be fused.
5. Starters shall be designed to operate in ambient temperatures up to 60º C.
6. The minimum size starter shall be NEMA Size 1.
7. Starters shall be NEMA rated and NEMA approved. IEC type starters are not acceptable.

E. Enclosures and Control Panels: See specification 16160, Enclosures

PART 3 - EXECUTION

3.1 INSTALLATION

A. Install as indicated and in accordance with manufacturer's recommendations and instructions.

B. Mount other equipment as shown on the Drawings and per NEC.

C. Ground all equipment per NEC.

3.2 TESTING

A. Test in accordance with Specification 16920, Electrical Acceptance Testing.

++ END OF SECTION ++

SECTION 16477

600 V FUSES

PART 1 - GENERAL

1.1 SCOPE OF WORK

A. This Section covers the requirements for protective fusing on this Project. The CONTRACTOR shall furnish and install fuses and fuse holders per the Drawings and equipment manufacturer's recommendations.

B. This Specification includes the general requirements for various types of fuses whether they are shown on the Drawings or not. If fusing is required by codes or manufacturers recommendations, but not shown on the Drawings, this Specification shall apply to the type of fusing provided by the CONTRACTOR.

C. Types of fuses specified in this Section include the following:
   1. Class L time-delay.
   2. Class L fast-acting.
   3. Class RK1 time-delay.
   4. Class RK1 and Class J current-limiting.
   5. Class RK5 time-delay.
   6. Class K5 time-delay, noncurrent-limiting.
   7. Class T current-limiting.

1.2 QUALITY ASSURANCE

A. The fuse manufacturer's facilities shall be ISO 9001 certified.

1.3 CODES AND STANDARDS

A. UL Compliance and Labeling: Comply with applicable provisions of UL 198D, "High-Interrupting-Capacity Class K Fuses". Provide over-current protective devices which are UL listed and labeled.

B. NEC Compliance: Comply with NEC as applicable to construction and installation of fusible devices.

C. ANSI Compliance: Comply with applicable requirements of ANSI C97.1, "Low-Voltage Cartridge Fuses 600 Volts or Less".

1.4 SUBMITTALS

A. Product Data: Submit manufacturer's technical product data on fuses, including specifications, electrical characteristics, installation instructions, furnished

specialties, and accessories in accordance with Section 16000, General Electrical Requirements, and the Contract Documents. In addition, include voltages and current ratings, interrupting ratings, current limitation ratings, time-current trip characteristic curves, and mounting requirements.

B. Shop Drawings: Submit for approval the following:
   1. A copy of this specification section, with addendum updates included, and all referenced and applicable sections, with addendum updates included, with each paragraph check-marked to indicate specification compliance or marked to indicate requested deviations from specification requirements. Check marks (✓) shall denote full compliance with a paragraph as a whole. If deviations from the specifications are indicated, and therefore requested by the CONTRACTOR, each deviation shall be underlined and denoted by a number in the margin to the right of the identified paragraph, referenced to a detailed written explanation of the reasons for requesting the deviation. The ENGINEER shall be the final authority for determining acceptability of requested deviations. The CONTRACTOR shall furnish equipment and/or services as specified if an exception and/or deviation is rejected. The remaining portions of the paragraph not underlined will signify compliance on the part of the CONTRACTOR with the specifications. Failure to include a copy of the marked-up specification sections, along with justification(s) for any requested deviations to the specification requirements, with the submittal shall be sufficient cause for rejection of the entire submittal with no further consideration.
   2. The CONTRACTOR shall submit the preventive maintenance information package as part of the shop drawing submittal package to the ENGINEER for review and approval. **SHOP DRAWING SUBMITTAL PACKAGE WILL NOT BE APPROVED WITHOUT ACCEPTANCE OF PREVENTIVE MAINTENANCE INFORMATION.**

1.5 MANUFACTURERS

A. Subject to compliance with requirements, manufacturers offering fusible devices which may be incorporated in the work include, but are not limited to, the following:
   1. Bussmann.
   2. Mersen.
   3. Or equal.

PART 2 - PRODUCTS

2.1 GENERAL

A. Except as otherwise indicated, provide fuses of types, sizes, ratings, and average time-current and peak let-through current characteristics indicated, which comply

with manufacturer's standard design, materials, and constructed in accordance with published product information, and with industry standards and configurations.

2.2 CLASS L TIME-DELAY FUSES

A. Provide UL Class L time-delay fuses rated 600 volts, 60 Hz, with 200,000 RMS symmetrical interrupting current rating for protecting transformers, motors, and circuit-breakers.

2.3 CLASS L FAST-ACTING FUSES

A. Provide UL Class L fast-acting fuses rated 600 volts, 60 Hz, with 200,000 RMS symmetrical interrupting current rating for protecting service entrances and main feeder circuit-breakers.

2.4 CLASS RK1 TIME-DELAY FUSES

A. Provide UL Class RK1 time-delay fuses rated 600 volts, 60 Hz, with 65,000 RMS symmetrical interrupting current rating for protecting motors and circuit-breakers.

2.5 CLASS RK1 CURRENT-LIMITING FUSES

A. Provide UL Class RK1 current-limiting fuses rated 250 volts, 60 Hz, with 65,000 RMS symmetrical interrupting current rating for protecting circuit breakers.

2.6 CLASS J CURRENT-LIMITING FUSES

A. Provide UL Class J current-limiting fuses rated 600 volts, 60 Hz, with 650,000 RMS symmetrical interrupting current rating.

2.7 CLASS RK5 TIME-DELAY FUSES

A. Provide UL Class RK5 time-delay fuses rated 600 volts, 60 Hz, with 65,000 RMS symmetrical interrupting current rating for protecting motors.

2.8 CLASS K5 ONE-TIME FUSES

A. Provide UL Class K5 one time fuses rated 250 volts, 60 Hz, with 65,000 RMS symmetrical interrupting current rating for protecting non-inductive loads.

2.9 CLASS T FUSES

A. Provide UL Class T fuses rated 600 volts, 60 Hz, with 65,000 RMS symmetrical interrupting current rating for protection of physically small devices.

PART 3 - EXECUTION

3.1 INSTALLATION

A. Fuse types and sizes shall be as indicated on the Drawings. Fuses shall be installed in accordance with the National Electrical Code (NEC) requirements and the manufacturer's written instructions.

B. Install fuses in proper fuse holders.

C. Where fuses are installed in the motor starters, fuses shall be sized to match the actual motor full load current.

D. Where fuses are installed in disconnect switches at HVAC units, the fuse sizes shall be sized to meet the HVAC manufacturer's requirements.

E. Fuses for control transformers shall be sized in accordance with the National Electrical Code.

F. Fuses shall be installed with the labels clearly visible.

3.2 FIELD QUALITY CONTROL

A. Prior to energizing fusible devices, test devices for circuit continuity and for short circuits.

3.3 SPARE PARTS

A. Furnish three spare fuses of each size and type.

++ END OF SECTION ++

SECTION 16481

MOTOR CONTROL CENTERS

PART 1 - GENERAL

1.1 RELATED DOCUMENTS

A. Drawings and General Provisions of the Contract, including General and Supplementary Conditions and Division 1, General Requirements, Specification Sections apply to this Section.

1.2 SUMMARY

A. This Section includes new motor control centers for use on AC circuits rated 600 VAC.

B. This section also includes modifications to existing motor control centers rated 600VAC.

1.3 SUBMITTALS

A. Product Data: For each type of controller and each type of motor control center. Include dimensions and manufacturer's technical data on features, performance, electrical characteristics, ratings, and finishes.

B. Shop Drawings: For each motor control center.
   1. Dimensioned Plans, elevations, sections, and details, including required clearances and service space around equipment. Show tabulations of installed devices, equipment features, and ratings. Include the following:
      a. Each installed unit's type and details.
      b. Nameplate legends.
      c. Short circuit current ratings of buses and installed units.
      d. Vertical and horizontal bus capacities.
      e. UL listing for series rating of overcurrent protective devices in combination controllers.
      f. Features, characteristics, ratings, and factory settings of each motor control center unit.
   2. Wiring Diagrams: Power, signal, and control wiring for class and type of motor control center. Differentiate between manufacturer-installed and field-installed wiring. Provide schematic wiring diagram for each type of controller.
   3. Submit for approval the following:
      a. A copy of this specification section, with addendum updates included, and all referenced and applicable sections, with addendum updates

included, with each paragraph check-marked to indicate specification compliance or marked to indicate requested deviations from specification requirements. Check marks (✓) shall denote full compliance with a paragraph as a whole. If deviations from the specifications are indicated, and therefore requested by the CONTRACTOR, each deviation shall be underlined and denoted by a number in the margin to the right of the identified paragraph, referenced to a detailed written explanation of the reasons for requesting the deviation. The ENGINEER shall be the final authority for determining acceptability of requested deviations. The CONTRACTOR shall furnish equipment and/or services as specified if an exception and/or deviation is rejected. The remaining portions of the paragraph not underlined will signify compliance on the part of the CONTRACTOR with the specifications. Failure to include a copy of the marked-up specification sections, along with justification(s) for any requested deviations to the specification requirements, with the submittal shall be sufficient cause for rejection of the entire submittal with no further consideration.

b. The CONTRACTOR shall submit the preventive maintenance information package as part of the shop drawing submittal package to the ENGINEER for review and approval. **SHOP DRAWING SUBMITTAL PACKAGE WILL NOT BE APPROVED WITHOUT ACCEPTANCE OF PREVENTIVE MAINTENANCE INFORMATION.**

C. Manufacturer Seismic Qualification Certification: Submit certification that motor control centers, accessories, and components will withstand seismic forces defined for the site.
   1. Basis for Certification: Indicate whether withstand certification is based on actual test of assembled components or on calculation.
      a. The term "withstand" means "the unit will remain in place without separation of any parts from the device when subjected to the seismic forces specified and the unit will be fully operational after the seismic event".
   2. Dimensioned Outline Drawings of Equipment Unit: Identify center of gravity and locate and describe mounting and anchorage provisions.
   3. Detailed description of equipment anchorage devices on which the certification is based and their installation requirements.

D. Qualification Data: For firms and persons specified in Paragraph 1.4 of this Specification.

E. Field Test Reports: Written reports specified in Part 3 of this Specification.

F. Manufacturer's field service report.

G. Maintenance Data: For motor control centers, all installed devices, and components to include in maintenance manuals specified in Division 1, General Requirements. In addition to requirements specified in Section 01700, Contract Closeout, include the following:
   1. Routine maintenance requirements for motor control centers and all installed components.
   2. Manufacturer's written instructions for testing and adjusting overcurrent protective devices.

H. Load-Current and Overload-Relay List: Compile after motors have been installed and arrange to demonstrate that selection of heaters suits actual motor nameplate full-load currents.

I. Arc Flash Hazard Survey and appropriate labeling shall be done on all circuits 300 volts and above.

1.4 QUALITY ASSURANCE

A. Manufacturer Qualifications: Maintain, within 100 miles of Project site, a service center capable of providing training, parts, and emergency maintenance and repairs.

B. Source Limitations: Obtain controllers of a single type through one source from a single manufacturer.

C. Electrical Components, Devices, and Accessories: Listed and labeled as defined in NFPA 70, Article 100, by a testing agency acceptable to authorities having jurisdiction, and marked for intended use.

D. Comply with NFPA 70.

1.5 DELIVERY, STORAGE, AND HANDLING

A. Deliver motor control centers in shipping splits of lengths that can be moved past obstructions in delivery path as indicated.

B. Handle motor control centers according to NEMA ICS 2.3, "Instructions for the Handling, Installation, Operation, and Maintenance of Motor Control Centers", use factory-installed lifting provisions.

C. Store motor control centers indoors in clean, dry space with uniform temperature to prevent condensation. Protect motor control centers from exposure to dirt, fumes, water, corrosive substances, and physical damage.

D. If stored in areas subjected to weather, cover motor control centers to protect from weather, dirt, dust, corrosive substances, and physical damage. Remove loose

packing and flammable materials from inside controllers; install electric heating of sufficient wattage to prevent condensation.

1.6 PROJECT CONDITIONS

A. Existing Utilities: Do not interrupt utilities serving facilities occupied by OWNER or others unless permitted under the following conditions and then only after arranging to provide temporary utility services according to requirements indicated:
   1. Notify construction manager at least two days in advance of proposed utility interruptions. Identify extent and duration of utility interruptions.
   2. Indicate method of providing temporary utilities.
   3. Do not proceed with utility interruptions without Construction Manager's written permission.

1.7 COORDINATION

A. Coordinate layout and installation of motor control centers with other construction including conduit, piping, equipment, and adjacent surfaces. Maintain required workspace clearances and required clearances for equipment access doors and panels.

B. Coordinate size and location of concrete bases. Cast anchor-bolt inserts into bases. Concrete, reinforcement, and formwork requirements are specified in Section 03300, Cast-In-Place Concrete.

C. Coordinate features of motor control centers, installed units, and accessory devices with pilot devices and control circuits to which they connect.

D. Coordinate features, accessories, and functions of each motor control center, each controller, and each installed unit with ratings and characteristics of supply circuit, motor, required control sequence, and duty cycle of motor and load.

1.8 EXTRA MATERIALS

A. Furnish extra materials described below that match products installed and that are packaged with protective covering for storage and identified with labels describing contents.
   1. Spare Fuses: Furnish one spare for every two installed, but not less than one set of three of each type and rating.
   2. Indicating Lights: Two of each type installed.

PART 2 - PRODUCTS

2.1 MANUFACTURERS

A. Manufacturers: Subject to compliance with requirements, provide products from the following:
   1. Eaton.
   2. Square D Company.
   3. Allen-Bradley.

2.2 MOTOR CONTROL CENTERS

A. Wiring: NEMA ICS 3, Class I, Type B.

B. Enclosures: Flush- or surface-mounted cabinets as indicated.
   1. Outdoor Locations: NEMA 250, Type 3R, provide intrusion switches on all sectional doors.
   2. Indoor Locations: NEMA Type 1A enclosure.
   3. Compartments: Modular; individual doors with concealed hinges and quick-captive screw fasteners. Interlocks on combination controller units requiring disconnecting means in OFF position before door can be opened or closed, except by operating a permissive release device.
   4. Interchangeability: Compartments constructed to allow for removal of units without opening adjacent doors, disconnecting adjacent compartments, or disturbing operation of other units in motor control center. Interchangeability of units requiring the same size compartment and constructed to permit ready rearrangement of units, such as replacing three single units with a unit requiring three spaces, without cutting or welding.
   5. Wiring Spaces: Wiring channel in each vertical section for vertical and horizontal wiring to each unit compartment; supports to hold wiring in place.

C. Short Circuit Current Rating for Each Section: Greater than indicated available fault current in symmetrical amperes at motor control center location or that required by power utility, whichever is greater.

2.3 BUSES

A. Material: Tin-plated copper, 98% conductivity.

B. Ampacity Ratings: As indicated on the Drawings for horizontal busses, 300 amperes minimum for vertical buses.

C. Neutral Buses: Full size.

D. Equipment Ground Bus: Non-insulated, horizontal copper bus, 2-inches by 1/4-inch, minimum.

E. Horizontal Bus Arrangement: Main phase, neutral and ground buses extended with same capacity the entire length of motor control center, with provision for future extension at both ends by bolt holes and captive bus splice sections or equivalent.

2.4 FUNCTIONAL FEATURES

A. Description: Modular arrangement of controllers, control devices, overcurrent protective devices, transformers, panelboards, instruments, indicating panels, blank panels, and other items mounted in compartments of motor control center.

B. Controller Units:
   1. Provide Motor Controller units supplied by the same manufacturer as the motor control center.
   2. Provide units with short circuit current ratings equal to or greater than short circuit current rating of motor control center section.
   3. Equip units in Type B and Type C motor control centers with pull-apart terminal strips or drawout terminal boards for external control connections.

C. Overcurrent Protective Devices: Individual feeder-tap units through 225 A rating shall have drawout mountings with connectors that automatically line up and connect with vertical-section buses while being racked into their normal, energized positions.

D. Surge Protection Devices: Connect to motor control center bus. Provide surge protective devices in accordance with Section 16282, Surge Protective Devices.

E. Transformer housing section for a transformer and a distribution panel with connections, as shown on the Drawings.

F. Spaces and Blank Units: Compartments fully bused and equipped with guide rails or equivalent, ready for insertion of drawout units.

G. Spare Units: Type, sizes, and ratings indicated; installed in compartments indicated "spare".

H. Provide power quality metering per section 16430 Curomer Power Metering System.

2.5 MOTOR CONTROLLERS

A. Description: NEMA ICS 2, Class A, full voltage, non-reversing, across-the-line, unless otherwise indicated.

B. Control Circuit: 120 volt; obtained from integral control power transformer with a control power transformer of sufficient capacity to operate connected pilot, indicating and control devices, +100% spare capacity.

C. Combination Controller: Factory-assembled combination controller and disconnect switch.
   1. Circuit Breaker Disconnecting Means: NEMA AB 1, motor-circuit protector with field-adjustable, short circuit trip coordinated with motor locked-rotor amperes.

D. Adjustable Overload Relay: Dip switch selectable for motor running overload protection with NEMA ICS 2, Class 10 tripping characteristic, and selected to protect motor against voltage and current unbalance and single phasing. Provide relay with Class II ground-fault protection, with start and run delays to prevent nuisance trip on starting.

E. Variable Frequency Drive: Provide Variable Frequency Drive motor controllers internal to MCC bucket in accordance with Section 16485, Variable Frequency Drives.

2.6 FEEDER OVERCURRENT PROTECTION

A. Thermal-Magnetic Circuit Breakers: Provide as shown on DRAWINGS. Unless otherwise shown on DRAWINGS, provide circuit breaker features as follows - Inverse time-current element for low-level overloads and instantaneous magnetic trip element for short circuits. Adjustable magnetic trip setting for circuit-breaker frame sizes 250 A and larger. All breakers 600 amp and larger shall be 100% rated.
   1. Adjustable Instantaneous-Trip Circuit Breakers: Magnetic trip element with front-mounted, field-adjustable trip setting.
   2. Electronic Trip Unit Circuit Breakers: RMS sensing; field-replaceable rating plug; with the following field-adjustable settings:
      a. Instantaneous trip.
      b. Long- and short-time pickup levels.
      c. Long- and short-time time adjustments.
      d. Ground-fault pickup level, time delay, and I2t response.
   3. Current-Limiting Circuit Breakers: Frame sizes 400 A and smaller; let-through ratings less than NEMA FU 1, RK-5.
   4. Integrally Fused Circuit Breakers: Thermal-magnetic trip element with integral limiter-style fuse listed for use with circuit breaker; trip activation on fuse opening or on opening of fuse compartment door.
   5. GFCI Circuit Breakers: Single- and 2-pole configurations with 5 mA trip sensitivity.
   6. Molded-Case Switch: Molded-case circuit breaker without trip units.

B. Molded-Case, Circuit-Breaker Features and Accessories: Provide as shown on DRAWINGS. Standard frame sizes, trip ratings, and number of poles.
   1. Lugs: Mechanical style, suitable for number, size, trip ratings, and material of conductors.
   2. Application Listing: Appropriate for application; Type SWD for switching fluorescent lighting loads; Type HACR for heating, air-conditioning, and refrigerating equipment.
   3. Ground-Fault Protection: Integrally mounted relay and trip unit with adjustable pickup and time-delay settings, push-to-test feature, and ground-fault indicator.
   4. Communication Capability: Circuit breaker-mounted communication module with functions and features compatible with power monitoring and control system.
   5. Shunt Trip: 120 volt trip coil energized from separate circuit, set to trip at 75% of rated voltage.
   6. Undervoltage Trip: Set to operate at 35% to 75% of rated voltage with field-adjustable 0.1 to 0.6 second time delay.

2.7 MOTOR CONTROL CENTER ACCESSORIES

A. Devices shall be factory installed in controller enclosure and shall be of the same manufacturer as the motor control center, unless otherwise indicated.

B. Pushbutton Stations, Pilot Lights, and Selector Switches: Provide pushbuttons, pilot lights, and selector switches in accordance with Section 16161, Control Panels.

C. Stop and Lockout Pushbutton Station: Momentary-break, pushbutton station with a factory-applied hasp arranged so padlock can be used to lock pushbutton in depressed position with control circuit open.

D. Control Relays: Provide auxiliary and adjustable time-delay relays in accordance with Section 16161, Control Panels.

E. Elapsed Time Meters: Provide elapsed time meters in accordance with Section 16161, Control Panels.

F. Meters: Panel-type, 2-1/2-inch minimum size with 90 degree or 120 degree scale, and ±2% accuracy. Where indicated, provide transfer device with an OFF position. Meters shall indicate the following:
   1. Ammeter: Output current, with current sensors rated to suit application.
   2. Voltmeter: Output voltage.
   3. Frequency Meter: Output frequency.

G. Multifunction Digital-Metering Monitor: UL listed or recognized, microprocessor-based unit suitable for three- or four-wire systems and with the following features:

H. Provide metering in accordance with Section 16430, Customer Power Metering System.

I. Phase Failure and Undervoltage Relays: Solid-state sensing circuit with isolated output contacts for hardwired connection. Provide adjustable undervoltage setting.

J. Current Sensing, Phase Failure Relays: Solid-state sensing circuit with isolated output contacts for hardwired connection; arranged to operate on phase failure, phase reversal, current unbalance of from 30% to 40%, or loss of supply voltage; with adjustable response delay.

K. Spare Fuse Cabinet: Identified cabinet with hinged, lockable door.

2.8 FACTORY FINISHES

A. Manufacturer's standard prime-coat finish ready for field painting.

B. Finish: Manufacturer's standard paint applied to factory-assembled and -tested controllers before shipping.

2.9 ENVIROMENTAL CONTROL

A. Environmental Controls:
   1. Furnish circulation fans near hot spots where required to prevent temperature from exceeding instrument and equipment ratings.
   2. Over-temperature switches shall be utilized to provide special cooling if required to maintain operating temperatures within the manufacturer's specified temperature range.
   3. Air conditioning cooling applications shall also include means of preventing moisture condensation inside the enclosure.

PART 3 - EXECUTION

3.1 EXAMINATION

A. Examine areas and surfaces to receive motor control centers for compliance with requirements, installation tolerances, and other conditions affecting performance.

B. Proceed with installation only after unsatisfactory conditions have been corrected.

3.2 APPLICATIONS

A. Select features of each controller to coordinate with ratings and characteristics of supply circuit and motor; required control sequence; duty cycle of motor, drive, and load; and configuration of pilot device and control circuit affecting controller functions.

B. Select horsepower rating of controllers to suit motor controlled.

3.3 INSTALLATION

A. See Section 16050, Basic Materials and Methods, for general installation instructions.

B. Anchor each motor control center assembly to steel-channel sills arranged and sized according to manufacturer's written instructions. Attach by bolting. Level and grout sills flush with motor control center mounting surface.

C. Install motor control centers on concrete bases complying with Section 03300, Cast-In-Place Concrete.

3.4 IDENTIFICATION

A. Identify motor control center, motor control center components, and control wiring according to Section 16195, Electrical Identification.

B. Operating Instructions: Frame printed operating instructions for motor control centers, including control sequences and emergency procedures. Fabricate frame of finished metal and cover instructions with clear acrylic plastic. Mount on front of motor control centers.

3.5 CONTROL WIRING INSTALLATION

A. Install wiring between motor control devices.

B. Bundle, train, and support wiring in enclosures.

C. Connect hand-off-automatic switch and other automatic control devices where available.
   1. Connect selector switches to bypass only manual and automatic control devices that have no safety functions when switch is in "hand" position.
   2. Connect selector switches with motor control circuit in both "hand" and "automatic" positions for safety-type control devices such as low and high pressure cutouts, high temperature cutouts, and motor overload protectors.

3.6 CONNECTIONS

A. Conduit installation requirements are specified in other Division 16, Electrical, Sections. Drawings indicate general arrangement of conduit, fittings, and specialties.

B. Ground equipment.

C. Tighten electrical connectors and terminals according to manufacturer's published torque-tightening values. If manufacturer's torque values are not indicated, use those specified in UL 486A and UL 486B.

3.7 FIELD QUALITY CONTROL

A. Prepare for Acceptance Tests as follows:
   1. Test insulation resistance for each motor control center element, bus, component, connecting supply, feeder, and control circuit.
   2. Test continuity of each circuit.

B. Testing: Perform the following field quality control testing:
   1. Perform each electrical test and visual and mechanical inspection indicated in NETA ATS, Sections 7.5, 7.6, and 7.16.
   2. Certify compliance with test parameters.
   3. Correct malfunctioning units on-site, where possible, and retest to demonstrate compliance; otherwise, replace with new units and retest.

C. Manufacturer's Field Service: Engage a factory-authorized service representative to inspect field-assembled components and equipment installation, including pre-testing and adjusting solid-state controllers.

D. Test Reports: Prepare a written report to record the following:
   1. Test procedures used.
   2. Test results that comply with requirements.
   3. Test results that do not comply with requirements and corrective action taken to achieve compliance with requirements.

3.8 ADJUSTING

A. Set field-adjustable switches and circuit breaker trip ranges.

3.9 CLEANING

A. Clean controllers internally, on completion of installation, according to manufacturer's written instructions. Vacuum dirt and debris; do not use compressed air to assist in cleaning.

3.10 START-UP SERVICE

A. Engage a factory-authorized service representative to perform start-up service.

B. Verify that motor control centers and components are installed and connected according to the Contract Documents.

C. Verify that electrical wiring installation complies with manufacturer's submittal and installation requirements in Division 16, Electrical, Sections.

D. Complete installation and start-up checks according to manufacturer's written instructions.

3.11 DEMONSTRATION

A. Engage a factory-authorized service representative to train OWNER'S maintenance personnel to adjust, operate, and maintain motor control centers.
   1. Train OWNER'S maintenance personnel on procedures and schedules for starting and stopping, troubleshooting, servicing, and maintaining equipment and schedules.
   2. Review data in maintenance manuals. Refer to Section 01700, Contract Closeout.
   3. Schedule training with OWNER, through Construction Manager, with at least seven days advance notice.

++ END OF SECTION ++

SECTION 16482

SOLID STATE MOTOR CONTROLLERS

PART 1 - GENERAL

1.1 SUMMARY

A. Section Includes:
   1. Solid state motor controllers (SSMC)* for use with NEMA Design "B" 460 VAC motors to reduce the current inrush as well as mechanical shocks that can result from starting or stopping a motor across the line.
   2. This section pertains to stand-alone solid state motor controllers in addition to those provided as part of a Motor Control Center. When providing a SSS inside a MCC, match the manufacturer of the MCC.
   3. Provide SSMC fully assembled as part of a Motor Control Center or as a standalone controller, ready for field installation, testing, and startup.

   *The terms SSMC and SSS (Solid State Starters) can be used interchangeably.

1.2 SUBMITTALS

A. Submit the following in accordance with Specification 16000, General Electrical Requirements:
   1. Complete electrical data on the SSMC and all accessories.
   2. Dimensional and weight information on the enclosure (if applicable).
   3. Fully developed ladder style elementary diagrams complete with terminal and wire designations. Label or tag all control devices.
   4. Comprehensive bill of material for all components used to assemble the finished product.
   5. Anticipated heat load for sizing of building HVAC system.
   6. Verification that unit is listed by an independent testing laboratory in accordance with Electric Industrial Control Equipment Specification UL 508.
   7. List of recommended spare parts for one year operation.

B. Shop Drawings: Submit for approval the following:
   1. A copy of this specification section, with addendum updates included, and all referenced and applicable sections, with addendum updates included, with each paragraph check-marked to indicate specification compliance or marked to indicate requested deviations from specification requirements. Check marks (✓) shall denote full compliance with a paragraph as a whole. If deviations from the specifications are indicated, and therefore requested by the CONTRACTOR, each deviation shall be underlined and denoted by a number in the margin to the right of the identified paragraph, referenced to a detailed written explanation of the reasons for requesting the deviation. The

ENGINEER shall be the final authority for determining acceptability of requested deviations. The CONTRACTOR shall furnish equipment and/or services as specified if an exception and/or deviation is rejected. The remaining portions of the paragraph not underlined will signify compliance on the part of the CONTRACTOR with the specifications. Failure to include a copy of the marked-up specification sections, along with justification(s) for any requested deviations to the specification requirements, with the submittal shall be sufficient cause for rejection of the entire submittal with no further consideration.

2. The CONTRACTOR shall submit the preventive maintenance information package as part of the shop drawing submittal package to the ENGINEER for review and approval. **SHOP DRAWING SUBMITTAL PACKAGE WILL NOT BE APPROVED WITHOUT ACCEPTANCE OF PREVENTIVE MAINTENANCE INFORMATION.**
3. Submit complete Operation and Maintenance Manuals in conformance with the Operation and Maintenance Manuals section of Section 01300, Submittals.

1.3 QUALITY ASSURANCE

A. Final assembly to be provided with a UL 508 label installed at the point of manufacturer.

B. The manufacturer shall be a certified ISO 9002 facility.

1.4 DELIVERY, STORAGE, AND HANDLING

A. Package unit to protect against shipping damage.

B. Store unit in a clean, dry, controlled environment until scheduled installation.

C. Handle units in accordance with manufacturer's recommendations and in such a manner as to prevent damage.

D. Replace any unit damaged as a result of improper shipping, storage, or handling.

1.5 PROJECT/SITE CONDITIONS

A. Unit shall be designed specifically for the environment into which it will be installed.

B. Provide weather protection, space heating to prevent condensation, and cooling or ventilation as recommended by SSMC manufacturer.

C. Provide sufficient clearance and housekeeping pads to allow air circulation and to prevent damage from standing water.

1.6 WARRANTY

A. Provide a one year warranty on materials and workmanship from date of start up or 18 months from date of shipment.

B. An optional extended warranty shall be available for up to an additional two years.

PART 2 - PRODUCT

2.1 MANUFACTURER

A. ABB.

B. Allen-Bradley

C. Eaton.

D. Square Company

2.2 GENERAL DESCRIPTION

A. Provided in a configuration suitable for panel mounting.

B. Uses a thyristor bridge consisting of at least two SCRs per phase to control the starting and stopping of industry standard motors. A soft start/current limit will be obtained by a timed voltage ramp of the thyristors. The thyristors will be controlled in such a manner that a smooth and stable acceleration ramp is ensured, independent of motor load.

C. Controlled by a microprocessor that continuously monitors the current and thyristor phasing of the starter.

D. All soft start power ratings shall use the same control module.

2.3 RATINGS

A. Designed to operate in an ambient temperature of 0° C to 40° C.

B. Storage temperature range shall be -25° C to 70° C.

C. Maximum relative humidity shall be 93% at 40° C, non-condensing.

D. Designed to operate in attitudes up to 3,300 feet. For higher altitudes, de-rate by 1.2% for each additional 330 feet.

E. Capable of operation within -15% to +10% of nominal voltage rating and automatically adapt for 50 Hz or 60 Hz.

F. Capable of supplying 300% of rated full load current for 60 seconds at maximum ambient temperature.

G. The SCRs shall have a minimum P.I.V. rating of 1,400 V. Lower rated SCRs with "protection" by MOVs will not be acceptable.

2.4 ADJUSTMENTS AND CONFIGURATIONS

A. All dialog functions, display units, remote functions, terminal blocks, configuration switches and adjustment potentiometers shall be accessible on the front of the control module. Exposure to control circuit boards or electrical power devices during routine adjustments shall be prohibited.

B. Dialog indication shall provide, as a minimum, the following conditions:
   1. Soft start ready for start.
   2. Soft start starting/stopping motor.
   3. Soft start running at full voltage.
   4. Thermal pre-alarm condition.
   5. Thermal fault.
   6. Soft start internal fault.
   7. Power supply fault.

C. Dip switches shall be used for configuring the soft start and will select:
   1. Manual or automatic reset.
   2. Freewheel or controlled stopping.
   3. Stop by deceleration ramp or DC injection braking.
   4. Full voltage boost on start (on or off).

D. Potentiometers or keypads shall be used for adjusting the operating parameters and will provide:
   1. Motor full load amps adjustable from 50% to 100% of the controller's current rating.
   2. Current limitation on starting adjustable from 2 to 5 times rated motor current.
   3. Voltage ramp adjustable from 1 to 30 seconds.
   4. Deceleration ramp or DC injection time adjustable from 2 to 60 seconds.

E. Output relays shall provide the following status indications:
   1. Fault Trip or Soft Start: One Form A and one Form B, minimum.
   2. Thermal Pre-alarm: One Form A and one Form B or one Form C, minimum.
   3. End of Start (voltage ramp complete and current below 130% motor FLA): One Form A.
   4. Brake (for control of braking contactor if this function is specified): One Form A.

F. Relay functions listed above must be isolated with respect to common.

2.5 PROTECTION

A. A microprocessor controlled thermal protection system shall be included, which continuously calculates the temperature-rise of the motor and soft start and provides:
   1. An overload pre-alarm which indicates by relay contact that the motor has exceeded its rated temperature rise by 100%. This function shall be annunciated only without resulting in fault trip of the motor.
   2. A thermal fault condition which stops the motor if the temperature-rise exceeds 120% of the motor thermal capability.
   3. An analog electronic circuit with a time constant adjustable to the motor's thermal cooling time constant ensuring the memorization of the thermal state even after power supply disconnection or shorting out of the power semiconductors.

B. The soft start shall have phase loss, phase unbalance, and under voltage protection.

2.6 CONTROL OPTIONS

A. Provide lockable disconnecting means to isolate the SSMC from incoming power. Disconnect may be either fused or circuit breaker style as shown on the Contract Drawings.

B. Provide lights, pushbuttons, selector switches, indicators, run time meters, and other accessories as shown on the Contract Documents in accordance with Section 16161, Control Panels.

C. Provide control relays in accordance with Section 16161, Control Panels.

D. Provide a control power transformer, 480:120 V, sized to accommodate all the control circuit requirements in addition to 25% spare capacity.

E. The soft start shall accept control logic either by operator devices (pushbuttons, selector switches, etc.) wired directly into the unit or from external relay logic.

F. Provide warning label in accordance with the NEC if power is available from more than one source.

G. Provide nameplates identifying all panel mounted equipment and operator controls.

2.7 SHORTING CONTACTOR

A. A microprocessor shall control the operation of the shorting contactor via an output relay.

B. The shorting contactor shall close, shorting the thyristors after the motor current is below 130% of motor FLA and voltage is below nominal voltage (indicating the acceleration ramp is complete), and open on a stop command to allow a deceleration ramp or DC injection stop.

C. Overload protection shall continue to protect the motor when shorting is used.

2.8 BRAKING CONTACTOR

A. If required by Contract Drawings, a microprocessor shall control the operation of the braking contactor via an output relay.

B. If an overload condition occurs during the injection brake period, braking shall continue as set. When braking is complete, restart shall be prohibited until the motor has cooled.

2.9 ISOLATION AND BYPASS CONTACTORS

A. If required by contract drawings, provide NEMA rated 3-pole isolation contactor to completely isolate the SSMC from the incoming power in the event of a shorted SCR or another defined fault condition.

B. If required by contract drawings, provide NEMA rated 3-pole reversing style contactor to both isolate the output of the SSMC, as well as allow across-the-line starting of the motor.

PART 3 - EXECUTION

3.1 INSTALLATION

A. Mount the SSMC in accordance with manufacturer's recommendations.

B. Provide sufficient clearance for air circulation and operation of any vent fans or cooling equipment.

C. Install conduit, pull and terminate all power and control conductors.

3.2 TESTING

A. Test in accordance with Specification 16920, Electrical Acceptance Testing.

++ END OF SECTION ++

SECTION 16485

VARIABLE FREQUENCY DRIVES - LOW VOLTAGE

PART 1 - GENERAL

1.1 SUMMARY

A. Section Includes:
   1. Variable Frequency Drive (VFD) systems rated 480 VAC or lower.

1.2 VFD FEATURES

A. The VFDs shall be provided with the following features:
   1. Fused control circuit transformer.
   2. Provision for 4 to 20 mA input speed reference signal.
   3. Electrically isolated auxiliary contacts for ready, running, and trouble status.
   4. Adjustable minimum/maximum frequency limits.
   5. Independent timed linear acceleration and deceleration.
   6. Adjustable motor slip compensation based on motor current.
   7. Terminal blocks for control and signal wires entering and leaving the controller.
   8. Output transistors shall be insulated gate bipolar transistors (IGBT) type, or Darlington pair.
   9. Current limit.
   10. Programmable automatic restart.
   11. 4 to 20 mA output signal proportional to VFD output frequency.
   12. Digital keypad for configuration, programming, local control, and monitoring.
   13. Microprocessor-based control for system logic sequencing functions.
   14. VFD shall have a minimum 18-pulse input circuit (for VFD's rated 40 HP and above) designed to reduce harmonic distortion.
   15. VFD's below 40 HP rating shall have a 6 pulse input circuit designed to reduce harmonic distortion.
   16. Ethernet port for TCP/IP communications.

1.3 FUNCTIONAL REQUIREMENTS

A. Supply Power: The VFD shall operate continuously with supply power of 480 volts ±10%, 60 Hz ±3%. The VFD shall remain on line and operate without damage to either the VFD or its connected load during a supply power variation of plus 50% lasting for a period of up to 0.01 seconds and minus 100% lasting for a period of up to 0.5 seconds.

B. Ambient Conditions: The VFDs shall operate continuously as specified in an ambient temperature of 0° C to +40° C and an ambient humidity of 0% to 90%,

non-condensing. Provide air conditioning as required to maintain the VFD manufacturers' maximum ambient temperature rating.

C. Load: The VFD system shall be capable of 110% continuous current overload. Variable torque inverters shall be capable of delivering 120% of the specified load for up to 60 seconds, and constant torque inverters shall deliver 150% overload current for 120 seconds.

D. Power Factor: Displacement power factor shall be not less than 0.95 at rated full speed and load. Overall power factor, including harmonic distortion, shall be 0.85, or greater. CONTRACTOR shall provide power factor correction components as necessary to meet this requirement.

E. Efficiency: Efficiency of VFD systems shall be at least 96% at 60 Hz output driving the specified maximum load.

F. Frequency and Voltage Regulation: VFD output frequency shall be regulated to within 0.6 Hz of the frequency set point. VFD output voltage shall be regulated to within ±1.0% of that value which will produce minimum motor heating at any operating frequency within the specified range.

G. Frequency Range: VFD shall be capable of continuous operation with the specified load at any frequency between 0.1 Hz and 60 Hz.

H. Space: VFD system size shall not exceed the size allotments specified on the Drawings, nor shall any portion of the VFD system exceed a height of 90-inches. VFD system shall be front accessible and shall not require rear access. The VFD equipment shall be suitable for mounting directly against the wall without any clearance for ventilation or other purposes. VFD units shall be arranged as required for entry of incoming line cables and as required for entry of load cables.

I. Ambient Noise: Free field noise generated by the VFD shall not exceed 85 dBA at 3 feet out from any point on the VFD cabinet under any normal operating condition.

1.4 PROTECTION AND ANNUNCIATION

A. Overcurrent Protection: The VFD system shall provide electronic current limit at 125% of motor nameplate current. Current limit shall be accurate to within 1.0% and shall smoothly limit motor speed at whatever value is necessary to limit motor current to that value.

B. The VFD shall also provide motor running overcurrent protection in compliance with NFPA 70 section 430.52.

C. Short Circuit Protection: The VFD shall be fully protected against load faults. Bolted faults, phase-to-phase, or phase-to-ground shall not damage the unit. Any

impedance or other current limiting necessary to meet this requirement shall be provided as part of the VFD system, and any losses caused by current limiting devices shall be included in efficiency calculation for the VFD system.

D. Line Voltage: The VFD shall be protected against high and low line voltage on one or more phases.

E. Internal Faults: The VFD shall incorporate an internal fault monitoring system to detect malfunctions. This system shall be designed to protect the VFD from transient and sustained faults, and to limit damage that may be caused by these faults.

F. Overtemperature: Overtemperature circuitry shall shut down the VFD upon overheating and display an overtemperature alarm, or message.

G. Diagnostics: The VFD shall be provided with a fault diagnostics system that indicates the cause of any shutdown. The system shall store faults in memory and discard the oldest faults as new ones fill the memory. Faults shall be accessible via a digital keypad, also used for local control and programming.

1.5 EXTERNAL CONTROL AND MONITORING

A. Speed Reference: The VFD shall accept a 4 to 20 milliampere direct current speed reference signal. Speed reference input shall be galvanically isolated and input resistance shall not exceed 250 ohms.

B. Ready Signal: The VFD shall provide a contact closure that indicates that the controller line power supply is within acceptable tolerances, the control circuits are normal, and there are no internal or external fault conditions that have not been reset. Presence of this signal indicates that the controller should start normally.

C. Running Signal: The VFD shall provide a contact closure which indicates that the controller is running.

D. System Trouble: Isolated normally open contacts for remote fault annunciation shall be provided and wired to terminal blocks, which shall be labeled and identified. Contact shall close under fault conditions. Fault conditions that drive the outputs shall be selectable from the digital keypad.

E. The VFD control circuitry shall shutdown the VFD if the motor overheats. Motor winding temperature switches, or RTDs shall be connected if provided by the motor manufacturer.

1.6 QUALITY ASSURANCE

A. This Section contains references to the following documents. They are a part of this Section as specified and modified. In case of conflict between the requirements of this Section and those of the listed documents, the requirements of this Section shall prevail.
   1. IEEE 519-1992, Guide for Harmonic Control in Electric Power Systems.
   2. NEMA 250-85, Enclosures for Industrial Control and Systems.
   3. NEMA ICS 2-83, Industrial Control Devices, Controllers and Assemblies.
   4. NEMA ICS 3-83, Industrial Systems.
   5. NFPA 70-87, National Electrical Code (NEC).
   6. Underwriters Laboratories, UL 508.

B. The VFD shall comply with the applicable requirements of NEMA ICS 3 and additional standards referenced by ICS 3.

C. The VFDs specified in this Section shall be the product of a single vendor. The CONTRACTOR shall assign unit responsibility for the adjustable frequency drives in this section. The CONTRACTOR shall submit letters of certification with the Shop Drawings from the VFD manufacturer, the motor manufacturer, and the driven equipment manufacturer stating that they have reviewed each application and that the combination will satisfy the application duties required, for the actual motor sizes required, regardless of deviations from the scheduled "nominal horsepower".

D. VFD manufacturing facility shall be ISO 9001 certified.

1.7 SUBMITTALS

A. The following information shall be provided in accordance with the Contract Documents:
   1. Catalog and technical data.
   2. Outline dimensions, shipping section dimensions, weight, and foundation requirements for all assemblies.
   3. External connection wiring diagram showing function and identification of all terminals requiring field connections.
   4. Line harmonic distortion calculations and filter design if applicable.
   5. Component fabrication drawings consisting of detailed circuit schematics, printed circuit board drawings, and chassis layouts for all electrical and electronic components.
   6. Manufacturer's certification that VFD can withstand fault conditions specified in Paragraph 1.4.
   7. Manufacturer's certification that VFD can withstand environmental conditions specified in Paragraph 1.4.

B. Shop Drawings: Submit for approval the following:

1. A copy of this specification section, with addendum updates included, and all referenced and applicable sections, with addendum updates included, with each paragraph check-marked to indicate specification compliance or marked to indicate requested deviations from specification requirements. Check marks (✓) shall denote full compliance with a paragraph as a whole. If deviations from the specifications are indicated, and therefore requested by the CONTRACTOR, each deviation shall be underlined and denoted by a number in the margin to the right of the identified paragraph, referenced to a detailed written explanation of the reasons for requesting the deviation. The ENGINEER shall be the final authority for determining acceptability of requested deviations. The CONTRACTOR shall furnish equipment and/or services as specified if an exception and/or deviation is rejected. The remaining portions of the paragraph not underlined will signify compliance on the part of the CONTRACTOR with the specifications. Failure to include a copy of the marked-up specification sections, along with justification(s) for any requested deviations to the specification requirements, with the submittal shall be sufficient cause for rejection of the entire submittal with no further consideration.
2. The CONTRACTOR shall submit the preventive maintenance information package as part of the shop drawing submittal package to the ENGINEER for review and approval. **SHOP DRAWING SUBMITTAL PACKAGE WILL NOT BE APPROVED WITHOUT ACCEPTANCE OF PREVENTIVE MAINTENANCE INFORMATION.**

1.8 COOLING REQUIREMENTS

A. VFDs shall be supplied with air conditioning, where shown on the Drawings. The air conditioner shall be mounted and ducted to provide efficient cooling of the VFD. Where air conditioners are mounted on a NEMA 12, 3R, or 4 enclosure, the installation shall maintain the NEMA rating of the enclosure. Enclosure cooling shall be closed-loop, with no outside air entering the enclosure. The unit shall be mounted either on the door, or the side, of the enclosure. Size units to maintain a maximum 40° C operating temperature for the VFDs, based on a 50° C outdoor temperature.

B. Air conditioners installed outdoors shall be supplied with outdoor packages and low operating temperature kits. Air conditioners shall be equipped with integral, or wall mounted thermostats.

C. Air circulation shall be furnished by dual centrifugal blowers; one for the enclosure closed-loop circuit and one for the ambient air circuit.

D. A hot-gas bypass valve shall regulate the air conditioner cooling and prevent freezing of the coils when operating in low ambient temperatures and low heat loads.

E. Air filters shall be standard disposable-type furnace filters with a large surface area. Only half the filter surface area shall be used at one time, so that the filter can be inverted, exposing the unused half to the air flow.

F. Air conditioner cabinets shall be constructed of cold rolled steel, with a phosphatized and baked enamel finish.

G. The air conditioners shall be available in single phase voltages of 120 and 240 volts. Manufacturers shall be McLean Midwest, BARD, or equal.

PART 2 - PRODUCTS

2.1 MANUFACTURERS

A. The VFDs shall be manufactured by one of the following:
   1. Eaton.
   2. Allen Bradley.
   3. Square D.
   4. Toshiba.

B. AC reactors shall be manufactured by one of the following:
   1. TCI.
   2. MIRUS.
   3. Powersmiths.
   4. Or equal.

2.2 ENCLOSURES

A. Enclosures shall be as shown on the Drawings, with force ventilated gasketed enclosures. UL approved Class 1 filters shall be provided on ventilation openings. Cabinets shall be fabricated from 14 gauge minimum thickness stainless steel. Cabinet shall be provided with an interior frame or otherwise formed so as to provide a rigid structure. Doors shall be hung on removable-pin hinges and equipped with vault-type latch capable of accepting a 3/8-inch shackle padlock. Three-point latch hardware shall be provided. Door width shall not exceed 30-inches.

2.3 INVERTER

A. A door-interlocked, flange-mounted, through-the-door power disconnecting means shall be provided to protect the inverter against internal faults and as a backup for external load faults. Provide a thermal-magnetic circuit breaker as the main disconnecting means for each VFD enclosure as specified in Section 16481.2.06, Motor Control Centers—Feeder Overcurrent Protection. Load faults shall normally be cleared by the inverter assembly.

B. Line reactors for harmonic filtering shall be provided on each VFD below 40 HP to reduce total harmonic distortion (THD) of the voltage and current power source. Total voltage and current harmonic distortion, including contribution of notching, and with all VFDs in operation shall not exceed the limits set forth for a general system in IEEE 519-1992, Tables 10.2 and 10.3. The voltage THD shall not exceed 5% and the current THD shall not exceed 10% as measured at the point of common coupling. The point of common coupling (PCC) is defined herein as the circuit breakers feeding each VFD, or where each VFD connects to the bus.

C. AC reactor coils in output circuitry of the VFD shall be provided to limit inductive switching surges such that the measured RMS voltage at the motor terminations does not exceed 480 VAC line to line, as shown on DRAWINGS.

D. Provide EMI/RFI filtering to eliminate radio interference between 10 KHZ and 30 MHZ.

E. Provide VFD manufacture’s recommended inverter output dv/dt filters within VFD enclosure where conductor length from VFD to motor equals or exceeds 100 feet. Provide in submittal, the manufacture’s recommended data for filters.

2.4 CONTROL DEVICES

A. See Control Devices Schematic for requirements.

B. Control devices and indicating lamps shall be provided in accordance with Section 16161, Control Panels.

PART 3 - EXECUTION

3.1 FIELD INSTALLATION

A. Each VFD shall be installed and tested by the CONTRACTOR with the assistance of factory-trained engineers in accordance with the manufacturer's specifications and the Contract Documents. The installation shall be certified on forms provided in the Contract Documents.

3.2 TESTING

A. Test in accordance with Specification 16920, Electrical Acceptance Testing.

3.3 TRAINING

A. Provide four hours of VFD training for the OWNER'S operations and maintenance staff. Training shall be certified on forms provided in the Contract Documents. Training shall cover VFD theory of operation, features and functions available, normal operation, troubleshooting, and routine maintenance. The

CONTRACTOR shall submit a syllabus for the training session for approval a minimum of three weeks prior to conducting the class. Provide each attendee with a class syllabus detailing each topic to be discussed.

B. Provide VFD training in accordance with Section 01410, Testing.

3.4 SPARE PARTS

A. The following spare parts shall be supplied with each type or frame size of VFD:
   1. Three sets of all replaceable fuses.
   2. One of each type of replaceable printed circuit board.
   3. Two of each type of output power transistor.

B. Provide three spare air conditioner filters for each type and size of air conditioner installed.

++ END OF SECTION ++

SECTION 16494

MANUAL TRANSFER SWITCH

PART 1 - GENERAL

1.1 SCOPE OF WORK

A. Manual transfer switch shall be furnished and installed, as indicated on the Drawings, with full load current rating as indicated on the Drawings. The switch shall be capable of switching all classes of load, and shall be rated for continuous duty when installed in a non-ventilated enclosure. Withstand current rating shall be as indicated on the Drawings.

1.2 SUBMITTALS

A. Contractor shall submit shop drawings, manufacturer's data sheets, and a complete wiring diagram detailing all connections to the electrical system in accordance with Section 16000, and other requirements of the Contract Documents.

B. CONTRACTOR shall coordinate Transfer Switch installation with Utility Generation Engineer and receive written approval before installation.

PART 2 - PRODUCTS

2.1 MANUAL TRANSFER SWITCH

A. The manual transfer switch shall be open transition, break-before-make type double throw safety switch. The manual transfer switch shall be heavy-duty with a quick-make, quick-break operating mechanism, with full cover interlock, and indicator handle.

B. The switch shall be rated for the voltage and current and shall have the number of poles indicated on the Drawings.

C. The transfer switch shall be listed by UL.

D. Enclosures shall be rated NEMA 12 for indoor use, and NEMA 3R for outdoor use, unless otherwise indicated on the Drawings.

E. The manual transfer switch handle shall be padlockable.

F. Manual transfer switches shall be as manufactured by Square D, Eaton, ABB, or equal.

2.2 GENERATOR CONNECTION CABINET

A. Cabinet shall be provided with SouthCo lockable latches on front door, and an independent access panel door. Access panel shall not open unless the main lockable door has been opened.

B. Internal bus shall be sized for 1000A/sq. in. opacity, and bus work shall be supported with UL Recognized Component (QEUY2) insulators.

C. Generator Connection Cabinets with male CAM-Loks for the generator connections shall be Underwriters Laboratories, Inc. listed under UL 1008: Transfer Switch Equipment.

D. Enclosures shall be either stand alone pad mount or wall mount NEMA 3R Aluminum powder coated Steel or as indicated in the contract drawings. Pad mounted enclosures shall be provided with a channel base, and wall mounted enclosures shall have external mounting ears.

E. Generator connection enclosure shall be manufactured by Berthold Electric Company, or equal.

PART 3 - EXECUTION

3.1 INSTALLATION

A. Transfer switch shall be installed, in accordance with the manufacturers' recommendations.

B. The manual transfer switch shall be installed as indicated on the Drawings.

C. Provide grounding per NEC.

3.2 TESTING

A. Test Transfer Switch and Generator Connection Cabinet in accordance with Specification 16920 – ELECTRICAL ACCEPTANCE TESTING.

++ END OF SECTION ++

SECTION 16500

LIGHTING

PART 1 - GENERAL

1.1 SCOPE OF WORK

A. The CONTRACTOR shall provide all labor, materials, equipment, and incidentals as shown, specified, and required to furnish and install lighting fixtures.

1.2 QUALITY ASSURANCE

A. Reference Standards:
   1. National Electrical Code (NEC).
   2. UL Standard #57, Electric Lighting Fixtures.
   3. UL Standard #844, Electric Lighting Fixtures for Use in Hazardous Location.
   4. UL Standard #1570, Fluorescent Lighting Fixtures.
   5. UL Standard #1571, Incandescent Lighting Fixtures.
   6. UL Standard #1572, High Intensity Discharge Lighting Fixtures.
   7. Illuminating Engineering Society (IES).
   8. All applicable local lighting ordinances.

B. Miscellaneous:
   1. Lamps are identified for each luminaire in the Lighting Fixture Schedule on the Drawings.
   2. Lighting fixtures and electrical components:
      a. UL labeled, complete with lamps.
      b. Rated for area classification as indicated.
   3. Location of lighting fixtures on Drawings are intended to be used as a guide.
      a. Field conditions may affect actual locations.
      b. Coordinate with other trades to avoid conflicts in mounting of fixtures and other equipment.
   4. The quality standard is established by the fixture listed in the Lighting Fixture Schedule.
      a. This quality standard includes, but is not necessarily limited to construction features, materials of construction, finish, and photometrics.

1.3 SUBMITTALS

A. The following shall be submitted to the ENGINEER for review:
   1. Acknowledgment that products submitted meet requirements of standards referenced.
   2. Manufacturer's technical information on products to be used including photometric performance curves for the fixture and ballast data.
   3. Acknowledgment that products submitted are UL or ETL listed.

4. When general data sheets constitute part of the submittal, identify the products to be used on this Project.
5. Manufacturer's installation instructions.
6. Identification of fixtures by Lighting Fixture Schedule.
7. UL nameplate data (voltage, wattage, etc.).
8. Finishes, colors, and mounting type.
9. Pole, fixture, and accessories.
10. Pole wind loading.

B. Shop Drawings: Submit for approval the following:
   1. A copy of this specification section, with addendum updates included, and all referenced and applicable sections, with addendum updates included, with each paragraph check-marked to indicate specification compliance or marked to indicate requested deviations from specification requirements. Check marks (✓) shall denote full compliance with a paragraph as a whole. If deviations from the specifications are indicated, and therefore requested by the CONTRACTOR, each deviation shall be underlined and denoted by a number in the margin to the right of the identified paragraph, referenced to a detailed written explanation of the reasons for requesting the deviation. The ENGINEER shall be the final authority for determining acceptability of requested deviations. The CONTRACTOR shall furnish equipment and/or services as specified if an exception and/or deviation is rejected. The remaining portions of the paragraph not underlined will signify compliance on the part of the CONTRACTOR with the specifications. Failure to include a copy of the marked-up specification sections, along with justification(s) for any requested deviations to the specification requirements, with the submittal shall be sufficient cause for rejection of the entire submittal with no further consideration.
   2. The CONTRACTOR shall submit the preventive maintenance information package as part of the shop drawing submittal package to the ENGINEER for review and approval. **SHOP DRAWING SUBMITTAL PACKAGE WILL NOT BE APPROVED WITHOUT ACCEPTANCE OF PREVENTIVE MAINTENANCE INFORMATION.**

C. CONTRACTOR shall submit shop drawings, manufacturer's data sheets, and a complete wiring diagram detailing all connections to the electrical system in accordance with Section 16000, General Electrical Requirements, and other requirements of the Contract Documents.

PART 2 - PRODUCTS

2.1 MANUFACTURERS

A. LED lamps shall be provided by one of the following:
   1. CREE.

2. Nichia.
3. Philips.

B. LED power supplies or drivers shall be provided by one of the following:
   1. Phillips.
   2. Thomas Research.
   3. EldoLED.

C. Non LED Lamps and ballasts shall be provided by the same manufacturer. Lamps and ballasts shall be manufactured by one of the following:
   1. Sylvania.
   2. Phillips/Advance/Bodine.

D. All lighting fixtures for this project shall be provided from the same manufacturer. Lighting fixtures shall be manufactured by one of the following:
   1. Holophane.
   2. Lithonia Lighting.
   3. Day Brite.
   4. Columbia.
   5. Axis.
   6. Rig-A-Lite.

E. Model, catalog number, features, and options for lighting fixtures shall be provided as indicated on the Lighting Fixture Schedule on the Drawings.

F. Light poles shall be as indicated on the Drawings. Include base template, anchor bolts, cadmium-plated hardware and pole grounding lug, handhole, anchor base, and bolt covers. Pole foundations shall be as indicated on the Drawings.

G. General:
   1. Lamps:
      a. See Lighting Fixture Schedule on Drawings for manufacture, wattage, voltage, and number required.
   2. All Fixtures:
      a. There shall be no live parts normally exposed to contact.
      b. When intended for use in wet area:
         1) Mark fixtures "suitable for wet locations".
      c. When intended for use in damp areas:
         1) Mark fixtures "suitable for damp locations" or "suitable for wet locations".
      d. In wet or damp area, install fixtures so that water cannot enter or accumulate in the wiring compartment, lampholder, or other electrical parts.
      e. Gasket Seals: Urethane foam.
      f. Diffusers: UV stabilized acrylic plastic.
   3. Underground Wiring:

a. Provide all wiring runs with separate green grounding conductor.
b. Ground all pole bases.

4. Pole Wiring grom Base to Ballast:
   a. No. 12 Type XHHW.
   b. Each phase shall be protected by a 30 A, 600 V, Type Tron waterproof fuseholder, Bussman "Limitron" type fuse, size rating 3-times load current.

H. LED lamps;
1. 4000K for exterior use luminaires.
2. 3500K for interior use luminaires.

I. Furnish a minimum of two lamps, or 10% spare lamps, of each type and wattage, whichever is greater. Furnish a minimum of 10% spare ballast and LED drivers.

2.2 MISCELLANEOUS ELECTRIC DEVICES

A. Photoelectric control units shall meet the following requirements:
1. Cadmium sulfide photocell.
2. Aluminum weatherproof enclosure.
3. 30 amp rated contacts.
4. 120 volt AC power.
5. The photoelectric control unit shall be Tork Model 2100, or equal.

B. Motion sensors shall meet the following requirements:
1. 110 degrees field of view, 60 foot range.
2. Adjustable time setting from 15 seconds to 15 minutes.
3. Operating temperature of -20° F to +130° F.
4. Complete outdoor, weather proof sensor with complete mounting hardware.
5. UL listed.
6. The motion sensor(s) shall be manufactured by Leviton Model 50500-H or equal.

PART 3 - EXECUTION

3.1 INSTALLATION

A. Install lamps in all luminaires.

B. Replace all failed fluorescent, incandescent, metal halide, mercury vapor, and high pressure sodium lamps with new lamps prior to final acceptance by OWNER.

C. Surface and flush mounted fixtures shall be solidly connected to a junction box. Suspended fixtures shall be hung utilizing pendant mounting or stainless steel chains and hooks. Each suspended fixtures, shall be electrically connected by a length of Type SO flexible cord. Three conductor No. 14 AWG, minimum, with a

twist-lock receptacle mounted in an individual junction box. Plugs and receptacles shall be as manufactured by Hubbell, General Electric Company, or equal.

D. Provide mounting brackets and/or structural mounting support for fixtures.
   1. Do not support fixture from conduit system.
   2. Do not support fixture from outlet boxes.

E. Install with approved mounting hardware following manufacturer's recommendations.

F. Pole mounted fixtures shall be mounted on steel or aluminum poles as indicated on the Drawings. All metal poles shall be bonded to the facility ground system. Poles shall have adequate handholes and weatherproof receptacles where indicated.

G. All anchor bolts and nuts shall be stainless steel. CONTRACTOR shall paint all steel poles with aluminum paint or other color in accordance with these Contract Documents.

H. Fixture mounting heights and locations indicated on the Drawings are approximate and are subject to revision in the field where necessary to avoid conflicts and obstructions.

3.2 ADJUSTING AND CLEANING

A. Wipe all lighting fixture reflectors, lenses, lamps, and trims clean after installation and prior to acceptance of Project by OWNER.

++ END OF SECTION ++

SECTION 16611

STATIC UNINTERRUPTIBLE POWER SUPPLY

PART 1 - GENERAL

1.1 SCOPE OF WORK

A. This Section covers the requirements for uninterruptible power supplies (UPSs) to be provided as shown on the Drawings and where specified below.

1.2 SUBMITTALS

A. Products shall be submitted in accordance with Section 16000, General Electrical Requirements, and the Contract Documents, prior to installation.

B. Shop Drawings: Submit for approval the following:
   1. A copy of this specification section, with addendum updates included, and all referenced and applicable sections, with addendum updates included, with each paragraph check-marked to indicate specification compliance or marked to indicate requested deviations from specification requirements. Check marks (✓) shall denote full compliance with a paragraph as a whole. If deviations from the specifications are indicated, and therefore requested by the CONTRACTOR, each deviation shall be underlined and denoted by a number in the margin to the right of the identified paragraph, referenced to a detailed written explanation of the reasons for requesting the deviation. The ENGINEER shall be the final authority for determining acceptability of requested deviations. The CONTRACTOR shall furnish equipment and/or services as specified if an exception and/or deviation is rejected. The remaining portions of the paragraph not underlined will signify compliance on the part of the CONTRACTOR with the specifications. Failure to include a copy of the marked-up specification sections, along with justification(s) for any requested deviations to the specification requirements, with the submittal shall be sufficient cause for rejection of the entire submittal with no further consideration.
   2. The CONTRACTOR shall submit the preventive maintenance information package as part of the shop drawing submittal package to the ENGINEER for review and approval. **SHOP DRAWING SUBMITTAL PACKAGE WILL NOT BE APPROVED WITHOUT ACCEPTANCE OF PREVENTIVE MAINTENANCE INFORMATION.**
   3. Submit complete Operation and Maintenance Manuals in conformance with the Operation and Maintenance Manuals section of Section 01300, Submittals.

1.3 REFERENCES

A. National Electrical Code (NEC) Article 250.

PART 2 - PRODUCTS

2.1 GENERAL REQUIREMENTS

A. The UPS equipment shall be manufactured by one of the following:
   1. Model Smart-UPS (1500VA minimum), as manufactured by APC.
   2. Toshiba.

B. The UPS shall be sized for a minimum of 30 minutes of backup power at full load for its connected load.

C. The UPS shall be a line-interactive type, consisting of a Ferro resonant or linear transformer, battery charger, batteries, inverter, and microprocessor control. The batteries shall be maintenance free, premium type.

D. The UPS shall pass lightning and surge protection ANSI/IEEE C62.41 standards, Category A and B. The UPS shall be UL 1449 listed.

E. The output waveform shall be a pure sine-wave with less than 5% total harmonic distortion on the inverter.

F. The UPS shall have a digital display for load-dependent runtime, volts in, volts out, battery voltage, percent loading, and alarm codes.

G. The UPS shall operate between 0° C and 40° C, at a minimum of 95% efficiency on-line.

H. Provide one external maintenance bypass switch for each UPS, rated for a minimum of UPS's full input and output load, capable of transferring the UPS's full load with a maximum interruption of 4-millliseconds. Maintenance bypass switch shall be SBP2200 series, as manufactured by APC, or equal.

I. Provide one UPS and UPS Maintenance Bypass Switch in each control panel that has a PLC in it.

J. Provide one UPS and UPS Maintenance Bypass Switch in network racks as shown on the Drawings.

PART 3 - EXECUTION

3.1 INSTALLATION

A. Install the UPS equipment in accordance with the manufacturers' recommendations.

B. The UPS and UPS maintenance bypass switch shall be provided with a two year parts and factory service warranty.

++ END OF SECTION ++

SECTION 16720

FIRE SURVEILLANCE AND ALARM SYSTEM

PART 1 - GENERAL

1.1 SUMMARY

A. Section Includes:
   1. Design, furnish and installation of fire surveillance and alarm system for the Operation and Maintenance (O&M) Building and Blower/Electrical Building.

B. Related Sections include but are not necessarily limited to:
   1. Division 1 - General Requirements.
   2. Division 23 – Heating, Ventilating, and Air-Conditioning (HVAC).
   3. Section 16000 – General Electrical Requirements.
   4. Section 16111 – Conduit.
   5. Section 16123 – 600 Volt Class Cable.

1.2 SYSTEM DESCRIPTION

A. Automatic and manual, micro-processor based, device addressable, supervised, closed-circuit, positive non-interfering low voltage fire detection and alarm system, with components as indicated, including but not limited to:
   1. Fire alarm control panel.
   2. Addressable manual stations.
   3. Fire alarm horn/strobes for all areas.
   4. Addressable smoke detectors.
   5. Addressable ductwork smoke detectors with auxiliary relays.
   6. Conduit and wiring system.
   7. Communications connections.

B. Provide all devices, components, conduit and wiring required for a complete functional system as specified whether indicated or not.

1.3 QUALITY ASSURANCE

A. Referenced Standards:
   1. National Fire Protection Association (NFPA):
      a. 70, National Electrical Code.
      b. 72A, Local Protective Signaling Systems for Guards Tour, Fire Alarm and Supervisory Service.
      c. 72E, Automatic Fire Detectors.
      d. 90A, Standard for Installation of Air Conditioning and Ventilating Systems.

e. 101, Life Safety Code.

2. Underwriters Laboratories, Inc. (UL):
   a. 268, Smoke Detectors for Fire Protective Signaling Systems.
   b. 268A, Smoke Detectors for Duct Applications.
   c. 346, Water-flow Indicators for Fire Protective Signaling Systems.
   d. 521, Heat Detectors for Fire Protective Signaling Systems.
   e. 753, Alarm Accessories for Automatic Water Supply Control Valves for Fire Protection Service.
   f. 864, Control Units for Fire Protective Signaling Systems.
3. Factory Mutual Insurance Co. (FM):
   a. All applicable standards.
   b. All components FM approved.

B. Design Criteria:
   1. Comply with all system standards.
   2. Meet all requirements of fire authorities having jurisdiction.
   3. Complete fire detection and alarm project specific layouts, wiring diagrams, interface wiring diagrams, and operational details by system manufacturer or authorized technical representative. Typical layouts are not permitted.

C. Service Organization Qualifications:
   1. Offer an annual maintenance contract including complete service and equipment costs for maintenance of complete system.
   2. Provide for 24 HR emergency service.

1.4 SUBMITTALS

A. See Contract Documents for submittals procedures.

B. Shop Drawings:
   1. Entire system shall comply with governing regulations. Provide:
      a. Wiring diagrams, riser diagrams and layouts.
      b. Technical data showing exact types and quantity of all fire alarm devices.

C. Name of local service organization and written evidence of City fire prevention bureau's approval for servicing fire alarm systems which have automatic connection to city fire headquarters.

D. Operation and Maintenance Manuals:
   1. See Contract Documents for requirements.

PART 2 - PRODUCTS

2.1 ACCEPTABLE MANUFACTURERS

A. Subject to compliance with the Contract Documents, the following manufacturers are acceptable:
   1. Manufacturer must have local service organization.
   2. Fire alarm system:
      a. Simplex Time Recorder Co.
      b. Honeywell.

2.2 EQUIPMENT

A. Control Panel:
   1. Program stored in nonvolatile memory. Program shall remain intact upon simultaneous failure of primary and backup power.
   2. Supervised for failure or removal of any module.
   3. Operator display/interface to include:
      a. Liquid crystal display - 80 character alphanumeric.
      b. Alarm acknowledge pushbutton.
      c. Signal silence pushbutton.
      d. System reset pushbutton.
      e. System test pushbutton.
      f. Lamp test pushbutton.
      g. Trouble silence pushbutton.
      h. LED indicators for AC power on, system trouble, system alarm, signals silenced.
   4. Provide filtered, regulated 24 V DC power supply capacity adequate for complete system operation plus 25 percent future capacity.
   5. Provide separate 24 V DC unregulated power supply for horn-strobe circuit operation.
   6. Control panel shall supervise signaling line circuits and indicating appliance circuits for opens, shorts and grounds.
   7. Provide supervised standby batteries, maintenance free, sealed non-outgassing type with capacity to maintain system supervision for 24 HRS followed by 5 minutes of operation of system and indicating appliances in alarm condition.
   8. Housed in surface-mounted NEMA 1 enclosure with hinged lockable door. Provide transparent viewing window over operator display/interface.
   9. Incorporate transformer, rectifier, fuses, batteries and other power supply components in fire alarm control panel, or separate panel, if approved for application.

B. Annunciator Panel:
   1. Alarm indicator lamp for each zone.
   2. Audible trouble signal and a trouble indicator lamp.

3. Lamp test switch.
4. Audible to visual trouble signal transfer switch.
5. Alarm silence switch.
6. Key reset switch.
7. Housed in NEMA 1 enclosure with hinged lockable door.
8. Zone identification shall consist of word description of the zone.

C. Smoke Detectors, Area:
1. Photo-electronic or ionization type as indicated. Plug-in type.
2. System shall automatically recognize sensor type to permit interchanging sensors without replacing or re-wiring the base.
3. Direct entry of device address.
4. Factory preset sensitivity at nominal values:
   a. Photoelectric: 2.3 percent.
   b. Ionization: 1.5 percent.
5. Provide RFI filtering for communications noise-immunity.
6. Sealed enclosure with insect screen.
7. Dual alarm indicator LEDs at 180 degrees for 360 degrees viewing capability.
8. Designed for satisfactory performance in high airflow velocities.
9. Sensitivity remotely monitored from control panel.
10. LED indicator shall flash to indicate normal supervision, solid to indicate system in alarm.
11. UL listed to 268.

D. Smoke Detectors, Air Duct:
1. Air sampling type complete with photoelectric smoke detector, sampling tubes, housing, power supply, and auxiliary relay.
2. Addressable.
3. Auxiliary relay contacts rated 5A, 125 V AC for fan control.
4. Listed to UL 268A.

E. Manual Pull Stations:
1. Double action, non-restoring type requiring key reset after operation.
2. Semi-flush mounting on standard outlet box. In unfinished rooms, surface mount on cast aluminum back box.
3. Direct rotary decimal switch setting of station address.
4. Red enameled with white lettering.
5. UL listed.

F. Monitor Module:
1. Addressable signal interface between signaling line circuits (SLC) and initiating device circuits (IDC).
2. Shall supervise IDC for opens shorts and grounds in style B configuration.
3. Direct rotary decimal switch selection of address.
4. Provide supervision/alarm-indicating LED.

5. Johnson Controls M500M.

G. Isolating Modules:
   1. Shall detect line-to-line short on signaling line circuits and operate to isolate faulted portion of the circuit.
   2. Terminal screws for in and out wiring.
   3. Supervision/alarm indicating LED.

H. Horn-Strobe Units for General Areas:
   1. 24 V DC operated.
   2. Sound power level 87 dBA at 10 FT per UL reverberant room test method.
   3. Strobe intensity: 8000 candela.
   4. Vibrating type with re-entrant horn.

I. Wiring:
   1. Conduit: 3/4" minimum. Refer to Section 16111.
   2. Conductors:
      a. Refer to Section 16123.
      b. 120 V AC power: 12 GA minimum.
      c. Alarm indicating circuits: 12 GA minimum.
      d. Initiating circuits: 14 GA solid.
      e. Signaling line circuits: Shielded twisted pair type SC to suit manufacturer's recommendations.

J. Power Supply to Control Panel:
   1. 120 V AC single phase, emergency circuit.

K. As a minimum, the following annunciator zones shall be provided:
   1. Zone 1 – Control Building Electrical Room.
   2. Zone 2 - Control Building Chlorine Room.

2.3 SYSTEM OPERATION: LOCAL

A. Activation of any signal initiating device shall cause all fire alarm horn/strobes to sound and initiate device indication and alarm LED on control panel and shutdown required HVAC equipment. Device address shall report to remote central station CRT and printer. City box shall be activated.

B. Alarm LED and trouble signal operate until alarm condition is corrected and control panel manually reset.

C. A ground, short or open on a detector loop or alarm circuit activates buzzer and common trouble LED at control panel and reports to indicate zone of ground or open at control panel. Grounds or opens shall not cause false alarms.

D. Loss of normal 120 V AC operating power to control panel activates trouble light and buzzer in control panel.

E. Provide silencing switch on control panel for silencing audible trouble buzzer.
   1. Trouble LED remains lighted until trouble condition is corrected.
   2. Restoration of system to normal causes trouble buzzer to sound until silencing switch is returned to normal.

F. All fire alarm signals are automatically locked in at control panel and central station until manually reset at control panel and originating device is returned to normal. Manual reset switch: Self restoring type, which cannot be left in abnormal position.

G. Provide alarm acknowledge switches on control panel for silencing fire alarm horn/strobes during alarm condition. Switch shall not impair ability of system to continue to perform as specified. Successive zone alarms shall cause horn/strobes to resound.

H. Operate control modules to de-energize power to certain equipment, upon operation of specific alarm initiating device. Equipment shall not restart until control panel is manually reset.

I. Provide Fan Shutdown Relays: Silver contacts, rated 10A/120 V AC, 3 PDT.
   1. Surface-mounted metal cabinet with locking door; key to match control panel door.
   2. Provide engraved phenolic nameplate mounted below unit identifying fan or air handling unit.
   3. Coil voltage as required.

J. Wire sprinkler water valve tamper switches, and water flow switches to initiate trouble signals.

PART 3 - EXECUTION

3.1 INSTALLATION

A. Install all components as indicated and in accordance with manufacturer's instructions and recommendations.
   1. Provide identification of panels, boxes, and equipment.

B. Install all wiring in accord with local and national codes and NFPA 72A. Provide separate conduit system for fire alarm and detection system wiring.
   1. Provide separate conduits for signaling line circuits and indicating appliance circuits.

C. Make all fire alarm wiring continuous from terminal to terminal or from terminal to device pigtail lead.
   1. Circuit splices not permitted.

2. Wiring joints, only when required at devices shall utilize Scotchlok insulated conical spring connector.

D. Provide all interconnection wiring between equipment control panels, motor starters and system modules required for specified performance.

E. In accordance with NFPA 90A, provide automatic smoke detectors for HVAC air systems above 2000-cfm capacity. Mount on 10 x 12 inch. hinged, gasketed door for testing and servicing.

3.2 TESTING

A. Provide a representative of manufacturer to supervise installation and final testing of system.

B. Entire system shall test free from opens, grounds, and short circuits.

C. Test system to satisfaction of ENGINEER and governing regulating authorities.

D. Submit affidavit (certification) to ENGINEER stating that system has been tested and operates properly.

++ END OF SECTION ++

SECTION 16912

ETHERNET NETWORK EQUIPMENT

PART 1 - GENERAL

1.1 SCOPE OF WORK

A. This Section covers the requirements for equipment required to be provided and installed as shown on the plans for the communications system architecture and Ethernet network and specified herein.

B. Products specified herein shall be furnished and installed without substitution. The Work shall be coordinated and scheduled with the ENGINEER and the OWNER.

C. Plant control system shall remain operational wherever possible. No control system shall be shut-down without the approval of the ENGINEER and the OWNER.

1.2 SUBMITTALS

A. Products shall be submitted to ENGINEER for review in accordance with Section 01300, Submittals, and the Contract Documents, prior to installation.

B. Submit complete Operation and Maintenance Manuals in conformance with the Operation and Maintenance Manuals section of Section 01300, Submittals.

PART 2 - PRODUCTS

2.1 ETHERNET SWITCH RACK MOUNT REQUIREMENTS

A. Ethernet Switch with Copper and Single Mode Fiber Optic ports
   1. The switches described here shall be provided for the communications network. Refer to DRAWINGS for locations.
   2. The Fast Ethernet switch shall have a minimum of (48) 10/100/1000base-T(X) ports.
   3. The Fast Ethernet switch shall have LEDs for power, ready, communication error, and active status. The Fast Ethernet switch shall be powered from 120 VAC, 1 phase source. The Fast Ethernet switch shall contain a minimum of (8) 1000Base SFP fiber optic connection ports.
   4. Provide SFP connection ports for single mode fiber with LC type connectors.
   5. Performance:
      a. Forward Rate: 95.2 Mpps
      b. Switch bandwidth: 216 Gbps, min.

c. Gigabit throughout

6. Environment:
   a. Operating Temperature: 0 to 45O degrees C
   b. Humidity: 10 to 95 percent, non-condensing
7. Managed Layer 2/3 switch. Additional features available through software setup includes but not limited to:
   a. Port Monitoring
   b. Remote switch management
   c. Port security
   d. Switch Meshing
   e. Rapid spanning tree protocol.
   f. Filtering: 802.1Q VLAN
8. Hardware: 19-inch rack mountable

B. Approved Ethernet switch manufacturers:
   1. Cisco 9300 48 POE+ series
   2. Or Owner Approved Equal

C. Industrial and Rugged SFP Type:
   1. Provide (2) Cisco GLC-LX-SM-RGD Compatible 1000Base-LX 1260-1360nm singlemode fiber SFP (mini-GBIC) modules.

2.2 RACK MOUNTED FIBER OPTIC PATCH PANEL

1. Fiber patch panels shall be provided as complete units including the housing, the connector panels, mounting hardware and fiber connectors.
2. Patch panels shall be provided with mounting hardware for a standard 19-inch rack.
3. Provide patch panel for 48 strand fiber terminated with SC type connector.
4. Approved Manufacturers:
   a) Corning CCH Series
   b) Or Approved equal

2.3 CATEGORY 6 ETHERNET CABLE

1. Category 6, Four-pair, balanced- twisted pair cable, No. 23 AWG solid copper. Must comply with NEMA WC 66/ICEA S-116-732 and TIA-568-D for Category 6 cables.
2. Cable Rating: Riser rated
3. Thermoplastic Jacket: PVC outer jacket
4. Required performance Characteristics:
   a. 1-250 MHz frequency range
   b. 100 Ohm impedance
   c. Min. attenuation 19.9dB
   d. Min. Near-end Crosstalk (NEXT) 44.3dB at 100MHz
   e. Min. Power Sum Near-end Crosstalk (PSNEXT) 42.3dB at 100MHz
   f. Min. Attenuation to Crosstalk Ratio, Far-end (ACRF) 27.8dB at 100MHz

g. Min. Power Sum Attenuation to crosstalk ratio, Far-end (PSACRF) 24.8dB
h. 100MHz
i. Min. return loss 20.1dB at 100MHz
j. Max. delay skew 45 ns
k. Max. propagation delay 540 ns

5. Ethernet patch cables shall be Category 6, four-pair, pre-wired and terminated, with RJ-45 connectors and lever protecting boot.
6. CAT6 cable colors shall be Blue for Process and Purple for SCADA.

2.4 SINGLEMODE FIBER OPTIC PATCH CABLE

A. OS2 Single mode type:
1. SC-LC connector
2. Jacket Material: PVC (OFNR riser rated)
3. Cable OD: 1.2 mm
4. Return Loss: -55 dB UPC and -65 dB APC
5. Temperature Stability: <0.3 dB for -400 C to 700 C
6. Operating Temperature: 0OC to +70OC.
7. Color: Yellow

B. Manufacturers:
1. Corning
2. Or approved equal.

C. CONTRACTOR to coordinate fiber-optic SC-LC patch cable lengths based on field conditions.

D. CONTRACTOR to coordinate OS2 fiber patch cables with fiber optic cabling Specification 16913.

2.5 UPS & BYPASS SWITCH

A. Shall meet the general requirements of Section 16611.

B. Shall be rack mounted and 750VA minimum.

C. Provide manufacturers recommended bypass switch and related components.

D. Approved manufacturers:
1. APC Model Smart UPS
2. Or Approved equal

2.6 VOICE AND DATA OUTLETS

A. Leviton, 110 Connect System for Category 6 or approved equivalent, which meets the minimum 100 MHz transmission speed standard. Appropriate faceplates for

either wall or floor boxes will be used. Data jacks and data cables must be blue in color.

2.7 VOICE AND DATA CABLE TESTING

A. All data cable shall be tested to insure compliance to the ASNI/TIA 568B.21 standard. Near End Crosstalk (NEXT) and Attenuation-to-Crosstalk Ratio (ACR) should be measured from both wiring closet and workstation ends.

B. Each jack in each outlet shall be tested for category 6, TSB 67 compliance using an appropriate Level 2 testing instrument to verify both integrity of all conductors and correctness of the termination sequence.

C. Voice cable shall be tested for wire map, continuity and decibel loss for fiber optics.

D. Copies of all results for testing and compliance shall be submitted.

2.8 SPARES

A. Provide (1) Rackmount Ethernet switch.

B. Provide (2) GLC-LX-SM Compatible 1000Base-LX SFP (mini-GBIC) modules, Industrial and Rugged version.

PART 3 - EXECUTION

3.1 INSTALLATION

A. Install all the above equipment, as indicated on the Plans and in accordance with the manufacturer's recommendations.

3.2 START UP AND TESTING

A. Upon completion of the installation, the CONTRACTOR shall provide two days of start up and testing assistance to the OWNER'S programmer to remedy networking cable and equipment issues.

++ END OF SECTION ++

SECTION 16913

FIBER OPTIC CABLING – SINGLE MODE

PART 1 - GENERAL

1.1 SCOPE OF WORK

A. This Section covers the requirements for the Single Mode Fiber Optic Cable to be furnished and installed, as shown on Plans and specified herein. Also included are fiber testing procedures, equipment accessory and splicing requirements.

B. The entire Single Mode Fiber Optic system is considered to be one component and provided by a single source, hereafter referred to as the Supplier.

C. The Contractor shall furnish and install all hardware, trenching, conduit and fiber optic cable as shown on Plans. Every Fiber Optic Conduit shall include Detectable Pull Tape. The Detectable Pull Tape traveling through a conduit, which terminates in the Pull Box shall have its ends connected together to allow for a continuous locating signal to be used for the entire conduit run. In addition the Contractor shall provide to the Owner one optical light source, one optical power meter, and the latest Windows based PC software specified herein.

D. See Drawings for coordination.

1.2 SUBMITTALS

A. Products shall be submitted to the Engineer for review in accordance with Section 01300 and other Contract Documents, prior to installation.

B. Include the following information in the submittal for this Section:

C. Cut sheets and catalog literature for proposed Single Mode Fiber Optic Cable, and fiber optic cable accessories (pigtails, connectors and Fan out Kits).

D. Manufacturer specifications and data that clearly shows that the Single Mode Fiber Optic Cable meets all requirements specified herein.

E. Samples of the proposed cable.

F. Physical dimension drawings of all fiber optic accessories.

G. Proposed fiber identification sequence and labeling.

H. Provide a Recommended Spare Parts List (RSPL).

I. Provide a list of recommended special tools for fiber installation testing or maintenance.

J. One (1) hand-held optical light source with ATT-complaint ST adapters, manufactured by Siecor, or equal.

K. One (1) hand-held optical power meter with ATT-complaint ST adapters, manufactured by Siecor, or equal.

L. One Latest copy of LinkLoss® Windows based PC software by Siecor, or equal.

M. Operation and Maintenance Manuals.

PART 2 - PRODUCTS

2.1 ACCEPTABLE MANUFACTURERS

A. Subject to compliance with the Contract Documents, the following manufacturers are acceptable:
   1. Corning
   2. Owner approved equal

2.2 DESIGN AND FABRICATION

A. Design Specifications:
   1. Fiber Type: OS2 Single Mode.
   2. Core Diameter: 8.3 microns.
   3. Core Eccentricity : ≤ 1.0 micron (0.3 Typical).
   4. Cladding Diameter: 125 microns.
   5. Mode field diameter: 9.3 ± 0.5 microns.
   6. Maximum Attenuation: 1 dB/km @ 1310 nm.
   7. Zero dispersion wavelength: 1300 to 1320nm.
   8. Buffer Type: Loose Tube, gel filled OR water-blocking.
   9. Number of Fibers: 48 (4x 12 pair) for Branch and Building Trunklines.
   10. Cable Central Strength Member: Dielectric.
   11. Cable Fill: Water blocking gel.
   12. Outer Jacket: Polyethylene, Black, Outdoor Rated.
   13. Coating Thickness: 50 ± 15 microns.
   14. Maximum Pulling Load: 600 lbf (2700 N).
   15. Operating Temperature Range: -34°C to -74°C.
   16. Bending Radius: 20 x Diameter Minimum.
   17. Zero dispersion slope: ≤0.092 picosec/nm^2 –km.
   18. Cutoff Wavelength: 1260nm.
   19. Point discontinuities at 1310nm: ≤0.1 db.
   20. Quantity: As shown on the Plans.

21. Packaging: Spools/reels, protected during and after shipment.

B. Fabrication:
   1. Fibers within the cable shall be color-coded so that each fiber may individually identified. The Single Mode trunk cable "Buffer Tube" outer jackets and fiber jackets shall be colored in accordance with EIA-598 and designated as shown below:

Fiber Buffer Tube Color	System Corridor Application
Blue	As directed by Owner
Orange	As directed by Owner
Green	As directed by Owner
Brown	As directed by Owner

   2. The trunk cables shall mate up to existing Fiber Optic Cables regarding the number of Fibers per Buffer Tube. Otherwise, 12 fibers per buffer tube shall be provided in the trunk cables.
   3. The outer jackets of the cable shall be continuous, free from holes, splits, blisters or inclusions. The same requirement holds for any inner jackets within a given cable structure as well as for fiber coatings.
   4. Materials used for fiber optic cable shall present no environmental or toxicological hazards as defined by current industry standards and shall comply with OSHA and EPA standards or applicable federal or state laws or regulations.
   5. The color of the polyethylene outer jacket material shall be black in accordance with ASTM D 1248, and contain a suitable antioxidant substance. The carbon black used shall be furnace-type conforming to designation N 110 in ASTM D 1765. The carbon black content in the jacket material when measured in accordance with ASTM D 1603 shall be 2.6% ± 0.25% by weight. The light absorption coefficient of jacket material shall be at least 400 when measured at wavelength of 375 nm per ASTM D 3349.
   6. Outer polyethylene jacket materials shall meet tensile strength and elongation minimum requirements for unaged and aged samples as follows:
   7. Tensile Strength at: 2800 psi (Unaged), 2100 psi (Aged).
   8. Elongation at Rupture: 400% (Unaged), 375% (Aged).
   9. The cable jacket shrinkage test measures the shrinkage or expansion of a cable jacket exposed to temperature aging for specified period of time. Maximum shrinkage shall be less than 5% for each specimen tested. The Test procedure is described in EIA-RS455, FOTP-86.

2.3 CABLE PACKAGING:

A. The cable shall be permanently marked to identify the manufacturer, date of manufacture, length markings, a product identification code, and UL messages

where appropriate. The markings shall be printed at regular intervals of not more than two feet apart.

B. The cable shall be packaged on a reel with inner hub diameter greater than the recommended minimum bending diameter of cable. The anchor holes on the reels shall admit a 2-1/2 IN diameter spindle with binding. The package shall be sturdy enough to endure reasonable handling in the process of shipping and storage. The package shall bear the name of the manufacturer, the product identification code and the total amount of product on the reel.

C. The following information shall be securely attached to the reel as a tag or clearly and permanently stenciled or labeled on each reel:
   1. Customer Order Number.
   2. Customer Job Number.
   3. Customer Reel Number.
   4. Termination.
   5. Ship Date.
   6. Manufacturer's Name.
   7. Factory Reel Number.
   8. Manufacturer's Cable Code (Type and Fiber count).
   9. Length of Cable.
   10. Weight of Cable and Reel.
   11. Defect Tag.
   12. The ends of all cable shall be sealed to prevent the escape of filling compound and to prevent the entry of moisture during shipping, handling, storage and installation.

D. Additional Fiber:
   1. The fiber count of the cable shall be at least 95% of cable rated strands. Each fiber will be tested prior to and upon completion of cable installation to verify that all fibers meet these specifications. If testing reveals that any fiber does not meet the requirements, the Contractor shall replace the cable with a new cable and perform all tests for the new cable at no additional cost to the owner.

E. Manufacturer Test Documentation:
   1. Test documentation from the fiber optic cable manufacturer shall be delivered to the Engineer upon delivery of the cable to the job site, as a prerequisite for cable installation.
   2. The documentation shall include Optical Time Domain Reflectometer (OTDR) traces for each fiber of each reel at 1310 nm. Optical attenuation test data shall be furnished for each fiber of each reel, as measured at 1310 nm.

F. Installation Testing:

1. The Contractor shall test the fiber optic cable prior to its installation. This testing shall be witnessed by the Engineer.
2. Testing shall consist of making an OTDR trace of each fiber of each reel, at 1310 nm. The test shall incorporate a 1 km long backscatter suppression cable inserted between the OTDR and the fiber end. Each trace shall include the optical length and average attenuation.
3. The results of the testing shall be submitted to the Engineer prior to installation. Any cable which shows out-of-spec performance shall be replaced at no increase in Contract price or schedule.

G. Cable Termination Enclosure and Hardware:
1. Cable termination enclosures shall be furnished as required.
2. The enclosures shall be used to terminate every fiber of the cable.
3. Minimum of 12 strands.

H. Network Rack/ LIU's:
1. RWIF Electrical Building:
    1. Provide Hoffman ProLine V/D and Server Cabinet, Type 1 PDCP2078BFP and required accessories or equal.
2. https://ecatalog.corning.com/optical-communications/US/en/Fiber-Optic-Hardware/Housings/Closet-Connector-Housing-%28CCH%29/p/closet-connector-housing-cch?clear=true.
3. https://ecatalog.corning.com/optical-communications/US/en/Fiber-Optic-Hardware/Wall-Mountable-Hardware/WCH-Hardware/WCH-Housings/Wall-Mountable-Connector-Housing-%28WCH%29/p/wall-mountable-connector-housing-wch.
4. https://ecatalog.corning.com/optical-communications/US/en/Fiber-Optic-Hardware/Wall-Mountable-Hardware/SPH-Hardware/SPH-Housings/Single-Panel-Housing-%28SPH%29/p/single-panel-housing.
5. Blue adaptor housing color for SMFO.
6. SC CCH panels for the LIU's for Singlemode Fiber Optics (SMFO).
    a. https://ecatalog.corning.com/optical-communications/US/en/Adapter-Type/Closet-Connector-Housing-%28CCH%29-Panel%2C-SC-Adapters/p/closet-connector-housing-cch-panel-sc-adapters.
7. Field terminated SC connectors for SMFO 95-201-41-SP:
    a. https://ecatalog.corning.com/optical-communications/US/en/Fiber-Optic-Connectivity/Field-Installable-Connectors/Anaerobic-Connector/Anaerobic-Connector/Anaerobic-Connector%2C-SC/p/anaerobic-connector-sc.
8. Buffer tube Fan-Out kits (For OSP fiber).
    a. https://ecatalog.corning.com/optical-communications/US/en/Fiber-Optic-Connectivity/Fan-Out-Kits/Buffer-Tube-Fan-Out-Kits%2C-indoor/Buffer-Tube-Fan-Out-Kits%2C-indoor/p/buffer-tube-fan-out-kit-indoor.

9. Provide Chatsworth horizontal, vertical cable management trays and blank 19 inch filler panels as required.

I. Pigtail Cables and Connectors:
   1. Each of the fibers shall be terminated with SC type connectors and connected to the termination enclosures.
   2. Pigtails shall be Single Mode for operation at 1300 nm, loose buffered and manufactured from fiber meeting the Specifications described for the main cable.

J. Splicing:
   1. Splices shall be made only at Pull Boxes and by a fusion process and shall have a splice loss no greater than 0.20 dB. Loss measurement shall be performed at the time of splicing and documentation shall be furnished for each splice. Splice testing shall be witnessed by the Engineer.
   2. Prior to stripping the cable, the Contractor shall record the cable length from the cable jacket. This length shall be documented and included in the test documentation, specified below.
   3. Each fiber optic cable shall be installed in innerduct.

K. Fiber Optic Splice Closures
   1. Contractor shall furnish and install Splice Closures, including Splice Trays, in pull boxes and cabinets as shown in the Plans or directed by the Engineer. The Contractor shall furnish and install cable splice closures including fiber optic splices in accordance with the Termination Tables. The Contractor shall place the cable splice closures in the pull boxes and cabinets by a method describes herein and by the Engineer.

2.4 CONSTRUCTION REQUIREMENTS

A. Splice Closures shall be required to meet GR771 CORE, GR769 CORE and be compatible with the fiber to be installed.

B. Splice Tray shall be required to meet ANSI/EIA/TIA-568-a and 606, and be compatible with fiber to be installed.

C. Cable Splice Closure shall seal, Bond Anchor and provide efficient routing, storage, organization, and protection of the fiber optic cable and splices, connectors and Trays. The splice closure shall be a stand-alone closure that does not require an outer closure. It shall consist of a reinforced thermoplastic envelope and an end plate assembly with corrosion resistant hardware. The splice closure shall provide fir a minimum of 4 cable entries. The splice closure shall permit the installation of fusion spliced cables. The splice closure shall be designed for use underground, branch and through cable applications. It shall have a reliable dual seal design with both cable jackets and core tubes sealed. All cables and endplate seals shall be composed of resilient and reusable materials.

D. The Contractor shall furnish, install, and secure splice closures, capable of storing a minimum of 144 fusion splices in splice trays, in pull boxes as designated in the plans. The Contractor shall only splice the needed fiber in the branch cable as indicated in the plans, or directed by the Engineer. The splice closure maximum dimensions shall not exceed 15" Long x 6" Deep where installed in a No. 7 pull box.

E. The following manufacturers are acceptable:
   1. Tyco Electronics, Model FOSC 450

F. Pull Boxes:
   1. Contractor shall furnish and install No. 7 and No. 9 Pull Boxes as shown in the Plans. No. 7 Pull boxes shall include extensions as indicated in the Plans or directly by the Engineer. The Contractor shall furnish and install Racks and Hooks in all No. 9 Pull Boxes. No. 7 with extensions as required and No. 9 pull boxes shall meet the requirements if the ADOT Standard Specifications and the 2004 ADOT Traffic Signals & Lighting Standard Drawings.
   2. Construction Requirements.
      a. The pull boxes shall be constructed per the requirements shown in the plans and per ADOT Standard Specifications. The boxes shall be field located within the intent of the plans. The boxes shall have locking mechanism that has been approved by the Engineer and Owner.
      b. Contractor shall furnish and install racking system in the new No. 9 pull boxes containing splice enclosures. The racking system shall consist of two right angles placed in the lip of the No. 9 pull box along the lateral sides. Each end of the right angles must be modified so that the horizontal face of the right angle rests on the lip of the pull box and the vertical face hangs below the lip. A slotted strap shall be cut to fit and attached to the right angles as a cross member to form an H-shape. Once the Fiber Optic Cables are neatly looped on the sides of the pull box one adjustable "J" hanger shall be attached to each right angle as a hanger for the looped cable. The Splice Closure shall then be secured to the racking system using two nylon tie straps attached to two slotted straps extending down and fastened to the same right angle. The materials used for the racking system shall be submitted to the Engineer for approval.

PART 3 - EXECUTION

3.1 CABLE INSTALLATION

A. All fiber optic cable shall be installed, terminated, and tested by the fiber supplier as specified herein and as shown on the Plans.

B. In pulling the cable, strain-release, or other tension limiting devices shall be used to limit the pull tension to less than 600 lbs.

C. Minimum bend radius restrictions shall be observed both during and after cable installation.

D. Each pull box shall have a minimum of 50 feet of slack cable loosely looped, or as required by the Engineer.

E. All conduit and cabinet entrances shall be sealed with RTV or other re-enterable sealant material to prevent ingress of water, dust or other foreign materials.

F. Splices in the fiber optic cable shall only be made where shown on the Plans. Non-terminating field splices shall not be made unless authorized by the Engineer. If a field splice is required, it shall be fusion spliced and placed in a buried pullbox. Closures shall be Lucent UCB2 with outer case, Siecor SCN, or equal. Encapsulant shall be placed between inner and outer closures. Such splices shall meet the loss parameters/testing requirements specified elsewhere.

3.2 CABLE DAMAGE DURING INSTALLATION

A. If the cable becomes damaged during installation, the Contractor shall stop work and notify the Engineer immediately. The Owner and Engineer will decide whether to replace the entire reel of cable or to install a splice at the damaged section.

B. If the Owner decides to replace the entire reel of cable, the Contractor shall begin the installation at the last designated splice point. The damaged cable between these points shall be removed, coiled, tagged, and given to the Owner. Installation of new cable to replace damaged cable shall not be a basis of extra payment or contract completion time.

C. If the Owner decides to install a splice at the damaged point, and the cable is damaged a second time, the entire reel of damaged cable (and all subsequent damaged reels) shall be replaced with new reels at the Contractor's expense.

3.3 CABLE ACCEPTANCE TESTING

A. Acceptance testing of the fiber and electronic equipment shall be conducted as a part of integrated system field testing, as specified. Prior to such test, however, the fiber optic cable shall be tested as specified herein.

B. The supplier shall conduct fiber optic cable testing as specified below. All testing shall be witnessed by the Engineer. A test plan shall be submitted at least one week prior to the proposed test date(s). The test plan and procedures shall be mutually agreed upon prior to conducting the tests.

C. Each optical fiber in every span shall be tested after installation and termination. For each fiber, an OTDR trace hard copy is required. This end-to-end trace shall be performed from BOTH ends of the fiber. The traces shall be made at 1300 nm. Also for each fiber, an end-to-end power attenuation (insertion less) test shall be performed from BOTH ends of the fiber. The attenuation test shall use a stabilized optical source and an optical power meter calibrated to the appropriate operating wavelength (1300 nm).

D. For each installed fiber, the power attenuation shall not exceed 1.0 dB/km @ 1300 nm, tested from connector to connector at the respective termination enclosures. Connectors shall have an attenuation loss no greater than 0.2 dB per connector.

E. Any fiber optic cables containing one or more fibers not meeting this performance will not be accepted, and shall be replaced at no additional cost to Owner.

F. All fiber optic testing shall be documented on pre-approved test forms. Three (3) copies of all documents (including OTDR traces) shall be submitted to the Engineer upon successful completion of the testing.

G. Work at the termination cabinets shall be performed such that the fiber optic cables, and the fibers, are not subjected to undesirable bending both during the work and when permanently fixed in place. The cables, fibers, pigtails, etc. shall be organized in a neat and orderly fashion within the enclosure. Inspection of the work will be performed by the Engineer. Unsatisfactory work shall be reworked at no additional cost to Owner.

++ END OF SECTION ++

SECTION 16920

ELECTRICAL ACCEPTANCE TESTING

PART 1 - GENERAL

1.1 SUMMARY

A. Section Includes:
   1. Requirements for electrical acceptance testing of electrical equipment and materials.
   2. It is the intent of the tests described herein to assure that all electrical equipment is operational and within industry and manufacturer's tolerances and is installed in accordance with design specifications.
   3. Acceptance testing performed by equipment vendors at the point of manufacturer must conform to all requirements of this specification. Testing performed at the point of manufacture which conforms to generally accepted industry practices is also acceptable so long as adequate test result documentation is provided.

B. Scope:
   1. All of the Acceptance Tests are required to be performed whether they are described in this Section or other applicable Sections. At a minimum, the following electrical systems are to be tested:
      a. Motor control centers.
      b. Switchgear, low voltage.
      c. Panelboards, power and lighting/receptacle.
      d. Transformers, dry type.
      e. Feeders.
      f. Cables rated 600 volts and higher.
      g. Transfer switches, manual and automatic.
      h. Transient voltage surge suppression systems.
      i. Grounding and bonding system.
      j. Lighting fixtures and associated controls.
      k. Other systems as listed under Part 3 of this Specification.

C. Related Documents:
   1. Drawings and General Provisions of the Contract, including General and Supplementary Conditions and other Division 1, General Requirements, Specification Sections, apply to the Work of this section.
   2. All work performed under this Section of the Work is subject to all requirements contained under Section 16000, General Electrical Requirements".
   3. All Division 16, Electrical, Specifications for electrical equipment provided for this Project that requires electrical acceptance testing.

1.2 REFERENCES

A. NETA ATS, Acceptance Testing Specifications, 2013 edition.

B. NFPA 70, National Electrical Code, 2011 edition.

C. Incorporated by reference all Codes, Standards, and Specifications referred to in the "Applicable References" section of NETA ATS-2013.

1.3 DEFINITIONS

A. NETA, InterNational Electrical Testing Association Inc.

B. NEC, National Electrical Code.

1.4 SYSTEM DESCRIPTION

A. Conditions:
   1. Provide all items, articles, materials, operations, or methods listed, mentioned, or scheduled on Drawings and/or herein including all labor, materials, equipment, and incidentals necessary and required for Electrical Acceptance Testing.
   2. Following established procedures, equipment shall be energized after certification by the testing organization that the installation is satisfactory.
   3. Correct or replace any current-carrying circuit, electrical equipment, or system which is defective or grounded and correct all other troubles encountered by these tests. All defects, whether through faulty workmanship or materials furnished, shall be corrected under this Section at the CONTRACTOR'S expense.

1.5 SUBMITTALS

A. Test Report Forms:
   1. All test reports shall be submitted using NETA or approved similar format and, where appropriate, test forms. Reports shall be legible using permanent ink. Pencil is not acceptable.
   2. Provide for ENGINEER'S review and approval a copy of each test form to be used on the Project. No testing shall be started prior to approval of all test forms.
   3. All test reports shall include the following information:
      a. Summary/description of the Project.
      b. Description of equipment tested.
      c. Description of the tests.
      d. Test data and analysis of the data indicating whether the equipment passed or failed the test.
   4. All test data records shall include the following minimum requirements:

a. Equipment identification, including tag numbers.
b. Humidity, temperature, and other conditions that may affect the results of the tests and/or calibrations.
c. Date of inspections, tests, maintenance, and/or calibrations.
d. Identification of the testing technician and their employer.
e. Indication of inspections, tests, maintenance, and/or calibrations to be performed and recorded.
f. Indication of expected results when calibrations are to be performed.
g. Indication of "as-found" and "as-left" results, as applicable.
h. Sufficient spaces to allow all results and comments to be indicated.

B. Shop Drawings: Submit for approval the following:
1. A copy of this specification section, with addendum updates included, and all referenced and applicable sections, with addendum updates included, with each paragraph check-marked to indicate specification compliance or marked to indicate requested deviations from specification requirements. Check marks (✓) shall denote full compliance with a paragraph as a whole. If deviations from the specifications are indicated, and therefore requested by the CONTRACTOR, each deviation shall be underlined and denoted by a number in the margin to the right of the identified paragraph, referenced to a detailed written explanation of the reasons for requesting the deviation. The ENGINEER shall be the final authority for determining acceptability of requested deviations. The CONTRACTOR shall furnish equipment and/or services as specified if an exception and/or deviation is rejected. The remaining portions of the paragraph not underlined will signify compliance on the part of the CONTRACTOR with the specifications. Failure to include a copy of the marked-up specification sections, along with justification(s) for any requested deviations to the specification requirements, with the submittal shall be sufficient cause for rejection of the entire submittal with no further consideration.
2. The CONTRACTOR shall submit the preventive maintenance information package as part of the shop drawing submittal package to the ENGINEER for review and approval. **SHOP DRAWING SUBMITTAL PACKAGE WILL NOT BE APPROVED WITHOUT ACCEPTANCE OF PREVENTIVE MAINTENANCE INFORMATION.**

C. Closeout Submittals:
1. Provide one copy each to ENGINEER and OWNER of all testing reports organized as follows:
a. Bind report in 3-ring binder(s).
b. Identify Project name, description, testing organizations name, and submittal date on front face and back cover of binder.
c. Provide all test reports, organized by equipment tag number.
d. Separate different equipment numbers with colored or numbered tabs.
e. Provide an index/table of contents.

PART 2 - PRODUCTS

2.1 MATERIALS

A. Any materials provided as part of the testing shall be new, unused, and in manufacturer's original packing.

2.2 TEST INSTRUMENT CALIBRATION

A. Contractor performing the testing shall have a calibration program which assures that all applicable test instruments are maintained within rated accuracy for each test instrument calibrated.

B. Contractor performing the testing shall maintain up-to-date instrument calibration instructions and procedures for each test instrument calibrated.

C. It is preferred that instrument calibration accuracy be directly traceable to the national Institute of Standards and Technology (NIST).

D. Instruments shall be calibrated in accordance with the following frequency schedule:
   1. Field Instruments: Analog, six months maximum. Digital, 12 months maximum
   2. Laboratory Instruments: 12 months maximum
   3. Leased Specialty Equipment: 12 months maximum.

E. Dated calibration labels shall be visible on all test equipment.

F. Records, which show date and results of instruments calibrated or tested, must be kept up to date.

G. Calibrating standard shall be better accuracy than that of the instrument tested.

PART 3 - EXECUTION

3.1 QUALIFICATIONS

A. The testing organization shall be an independent, third party entity which can function as an unbiased testing authority, professionally independent of the manufacturers, suppliers, and installers of equipment or systems being evaluated. When such testing organization is used, it must meet the following requirements:
   1. The testing organization shall be regularly engaged in the testing of electrical equipment, devices, installations, and systems.
   2. The testing organization shall use technicians who are regularly employed for testing purposes.

3. The testing organization shall be a member of NETA or be able to prove qualifications equal to or better than required for membership in NETA.
4. Submit appropriate documentation demonstrating that the testing organization meets the requirements listed above.
5. Technicians performing these electrical tests and inspections shall be trained and experienced concerning the apparatus and systems being evaluated. These individuals shall be capable of conducting the tests in a safe manner and with complete knowledge of the hazards involved. They must evaluate the test data and make a judgment on the serviceability of the specific equipment.
6. Technicians shall be certified in accordance with ANSI/NETA ETT-2000, "Standard for Certification of Electrical Testing Personnel". Each on-site crew leader shall hold a current certification, Level III or higher, in electrical testing.

B. CONTRACTOR may perform the electrical acceptance testing under the following conditions:
1. CONTRACTOR'S personnel performing the testing and their testing equipment meets all other requirements of this Specification.
2. Written approval is received from ENGINEER after review of testing personnel qualifications. At a minimum, CONTRACTOR'S testing personnel must have specific instruction on the testing instruments, accessories, and tests being performed and must be able to evaluate the test results.

3.2 NOTIFICATION

A. Notify ENGINEER and Construction Manager at least two days prior to testing so that they may be present during testing.

3.3 SAFETY AND PRECAUTIONS

A. Safety practices shall include, but are not limited to, the following requirements:
1. Occupational Safety and Health Act OSHA.
2. Accident Prevention Manual for Industrial Operations, National Safety Council, Chapter 4.
3. Applicable State and local safety operating procedures.
4. NETA Safety/Accident Prevention Program.
5. National Fire Protection Association - NFPA 70E.
6. ANSI Z244.1 American National Standards for Personnel Protection.

B. All tests shall be performed with apparatus de-energized, except where otherwise specifically specified.

C. The testing firm shall have a designated safety representative on the Project to supervise operations with respect to safety.

3.4 EQUIPMENT TESTING REQUIREMENTS

A. The intent of this Specification is not to duplicate testing performed at the point of manufacture or to impose additional burden on the CONTRACTOR which does not benefit the Project. The intent is to verify that electrical equipment has been securely fastened down, supported, and installed in accordance with the manufacturer's requirements. The intent is also to verify that all electrical connections are correctly torqued, properly aligned, properly insulated, and properly supported and that equipment is clean and ready for operation.

B. Except as noted below or as approved by engineer, test the following equipment and assemblies in full accordance with NETA-ATS 2003.

C. Switchgear and switchboard assemblies.

D. Transformers, dry type, air-cooled, low-voltage, small.

E. Transformers, dry type, air-cooled, large.

F. Transformers, liquid-filled.

G. Cables, low-voltage, 600 volt maximum.
   1. Perform tests only on cables Size #4 AWG and larger.

H. Cables, medium-voltage and high-voltage.

I. Metal-enclosed busways.

J. Switches, air, low-voltage:
   1. Perform tests only on switches rated 100 amps or higher.

K. Switches, air, medium-voltage, metal-enclosed.

L. Switches, oil, medium-voltage.

M. Switches, vacuum, medium-voltage.

N. Switches, Cutouts:
   1. Perform tests only on equipment rated 100 amps or higher.

O. Circuit Breakers, Air, Insulated-Case, Molded-Case:
   1. Perform visual and mechanical inspections in accordance with NETA for all circuit breakers.
   2. Perform electrical tests only on circuit breakers rated 100 amps or higher provided in power distribution and lighting/receptacle panelboards.
   3. No testing is required for circuit breakers provided as part of any of the following:

a. A UL listed control panel.
b. UL listed factory supplied motor control centers.
c. Stand-alone combination motor starters.

P. Circuit breakers, air, medium voltage.

Q. Circuit breakers, oil, medium voltage and high voltage.

R. Circuit breakers, vacuum, medium voltage.

S. Circuit switchers.

T. Network protectors, 600 volt class.

U. Protective relays.

V. Metering devices.

W. Regulating apparatus, voltage, step and induction voltage regulators.

X. Regulating apparatus, load tap-changers.

Y. Grounding systems.

Z. Ground-fault protection systems, low-voltage.

AA. Rotating Machinery, AC Motors, and Generators:
1. Motors provided as part of valve actuators do not require testing.
2. Perform visual and mechanical inspections on all motors.
3. Perform rotation tests on all motors.
4. Perform electrical tests only on motors 50 horsepower and larger.

BB. Motor control, motor starters, low-voltage.

CC. Motor control, motor starters, medium-voltage.

DD. Variable speed drive systems.

EE. Direct-current systems, batteries, flooded and valve-regulated lead-acid.

FF. Direct-current systems, chargers.

GG. Surge arresters, low-voltage surge protection devices.

HH. Surge arresters, medium and high-voltage surge protection devices.

II. Capacitors and reactors - all types.

JJ. Outdoor bus structure.

KK. Emergency and standby power systems, engine generator.

LL. Emergency and standby power systems, UPS.

MM. Emergency and standby power systems, automatic transfer switches.

NN. Fiber-optic cable Systems.

3.5 CONSTRUCTION

A. Interface with Other Work:
   1. Coordinate all testing activities with other disciplines. Retest any equipment disturbed or damaged in any manner after initial testing.

3.6 CLOSEOUT REPORT

A. Provide comprehensive bound test report in accordance with Part 1 of this Specification.

++ END OF SECTION ++

SECTION 16951

SHORT CIRCUIT, COORDINATION, AND ARC-FLASH HAZARD REPORT

PART 1 - GENERAL

1.1 DESCRIPTION

A. General:
   1. Prepare a short circuit analysis, protective device coordination study, and an arc flash hazard analysis for the project electrical power source and distribution system for the new facility and any modified existing electrical equipment.
   2. The short circuit, coordination study, and arc flash hazard report shall provide an evaluation of the electrical power system with the model numbers and settings of the protective devices.

B. Scope:
   1. Perform and provide a complete short circuit analysis with equipment interrupting or withstand rating evaluation and a protective device coordination study for the electrical power distribution system serving the facility.
   2. Include all portions of the electrical power distribution system from the utility primary service drop through 12.47 kV, 480 V (including motor loads) and 120/208 V lighting panels.
   3. Electrical equipment bus impedance shall be assumed to be zero. Short circuit momentary duties and interrupting duties shall be calculated on the basis of maximum available fault current at each project power source or power distribution equipment including switchgear, switchboard, motor control center, and branch circuit panelboards.
   4. A protective device coordination study shall be performed to determine proper selection of power fuse ratings, protective relay characteristics and settings, ratios and characteristics of associated voltage and current transformers, and circuit breaker trip characteristics and settings.
   5. The coordination study shall include all voltage classes of equipment from the utility's closest upstream protective device to existing and new equipment including switchgear, switchboards, motor control centers, and 120 volt panelboards main circuit protection.
   6. 120 /208 V panelboard branch circuit devices need not be considered. The phase overcurrent and ground-fault protection shall be included, settings for the adjustable protective devices, and electrical metering and monitoring devices.
   7. Provide an arc flash hazard analysis to warn personnel of the dangers of live exposed electrical equipment. Provide appropriate labeling for electrical equipment per NFPA 70E that indicates the flash hazard boundaries, incident

energy available, and the required PPE (Personal Protective Equipment) level.

8. An equipment evaluation study shall be performed to determine the adequacy of existing or proposed electrical equipment by tabulating and comparing the short circuit ratings with the available fault currents.
9. Problem areas or inadequacies in the proposed equipment shall be identified in the report.

1.2 REFERENCES

A. This Section contains references to the following documents and they are part of this section as specified and modified. In case of conflict between the requirements of this Section and those of the listed documents, the requirements of this section shall prevail.
   1. IEEE 141, Recommended Practice for Electrical Power Distribution for Industrial Plants.
   2. IEEE 242, Recommended Practice for Protection and Coordination of Industrial and Commercial Power Systems.
   3. IEEE 1584, IEEE Guide for Performing Arc Flash Hazard Calculations.
   4. NFPA 70E, Standard for Electrical Safety Requirements for Employee Workplaces.

1.3 SUBMITTAL SCHEDULE

A. The report shall be submitted with the major electrical distribution equipment and switchgear detailed product submittal.

B. The ENGINEER reviewed report shall be corrected, revised, and resubmitted as required. The report will be reviewed along with the electrical distribution and switchgear product submittal.

C. The CONTRACTOR shall distribute the ENGINEER accepted report to the major electrical distribution equipment and switchgear manufacturers before the electrical distribution equipment and switchgear is manufactured.

D. Provide an electronic copies of the protective device coordination study results and model files, as generated by the study software.

E. The report specified herein shall be provided in accordance with Contract Documents.

F. Provide arc flash hazard warning labels for all electrical distribution equipment as indicated in section 1.1.B.

G. Shop Drawings: Submit for approval the following:
   1. A copy of this specification section, with addendum updates included, and all referenced and applicable sections, with addendum updates included, with

each paragraph check-marked to indicate specification compliance or marked to indicate requested deviations from specification requirements. Check marks (✓) shall denote full compliance with a paragraph as a whole. If deviations from the specifications are indicated, and therefore requested by the CONTRACTOR, each deviation shall be underlined and denoted by a number in the margin to the right of the identified paragraph, referenced to a detailed written explanation of the reasons for requesting the deviation. The ENGINEER shall be the final authority for determining acceptability of requested deviations. The CONTRACTOR shall furnish equipment and/or services as specified if an exception and/or deviation is rejected. The remaining portions of the paragraph not underlined will signify compliance on the part of the CONTRACTOR with the specifications. Failure to include a copy of the marked-up specification sections, along with justification(s) for any requested deviations to the specification requirements, with the submittal shall be sufficient cause for rejection of the entire submittal with no further consideration.

2. The CONTRACTOR shall submit the preventive maintenance information package as part of the shop drawing submittal package to the ENGINEER for review and approval. **SHOP DRAWING SUBMITTAL PACKAGE WILL NOT BE APPROVED WITHOUT ACCEPTANCE OF PREVENTIVE MAINTENANCE INFORMATION.**

PART 2 - PRODUCTS

2.1 REPORT

A. The report shall be sealed and signed by the responsible electrical engineer, summarize the short circuit analysis, protective device coordination study, arc flash hazard analysis, potential problem issues, conclusions, and recommendations that may affect the integrity of the project power distribution system. As a minimum, the report shall include the following.
   1. The equipment manufacturer's information used to prepare the study.
   2. Assumptions made during the study.
   3. Short circuit calculations listing short circuit levels at each bus.
   4. Simplified single line diagrams generated by the study software.
   5. Coordination study time-current curves including the instrument transformer ratios, model numbers of the protective relays, relay settings, and trip unit settings associated with each breaker.
   6. Arc flash hazard analysis calculations.
   7. Comparison of short circuit duties of each bus to the withstand and interrupting capacity of the equipment protecting that bus.
   8. Data used as input to the report including cable impedance, source impedance, equipment ratings, equipment time-current curves etc.

PART 3 - EXECUTION

3.1 GENERAL

A. Provide the short circuit analysis, coordination study, and arc flash hazard analysis for the electrical power distribution system using SKM System Analysis, Inc. Power Tools, or equal.

B. The studies shall be performed in accordance with IEEE Standards 141, 242, 1584, and NFPA 70E and shall utilize the ANSI; method of short circuit analysis in accordance with ANSI C37.010.

C. The studies shall be performed using actual equipment data for the new equipment. The analysis and study shall use the equipment and protective device data provided by the electrical distribution equipment manufacturer for the Project.

3.2 SHORT CIRCUIT ANALYSIS

A. The Short Circuit Analysis and Report shall include the following.
   1. One-Line Diagram:
      a. Location and function of each protective device in the system, such as relays, direct-acting trips, fuses, etc.
      b. Type designation, current rating, range or adjustment, manufacturer's style and catalog number for all protective devices.
      c. Power, voltage ratings, impedance, primary and secondary connections of all transformers.
      d. Type, manufacturer, and ratio of all instrument transformers energizing each relay.
      e. Sources of short circuit currents such as utility ties, generators, synchronous motors, and induction motors.
   2. Impedance Diagram:
      a. Available MVA or impedance from the power utility company.
      b. Local generated capacity impedance.
      c. Bus impedance.
      d. Transformer and/or reactor impedance.
      e. Cable impedance.
      f. Equipment impedance.
      g. System voltages.
      h. Grounding scheme (resistance grounding, solid grounding, or no grounding).
   3. Calculations:
      a. Determine the paths and situations where short circuit currents are the greatest.
      b. Assume bolted faults and calculate the 3-phase and line-to-ground short circuits of each case.
      c. Calculate the maximum and minimum fault currents.

3.3 PROTECTIVE DEVICE COORDINATION STUDY

A. The time-current characteristics of the specified and indicated protective devices shall be plotted on 5-cycle, log-log graph paper with a maximum of eight protective devices per plot. The coordination study time-current plots shall, at a minimum, include the following:
   1. Time-current for each protective relay or fuse showing graphically that the settings will provide protection and selectivity within industry standards. Each curve shall be identified, and the tap and time settings shall be specified.
   2. Time-current curves for each device shall be positioned to provide for maximum selectivity to minimize system disturbances during fault clearing. Reasonable coordination intervals and separation of characteristic curves shall be maintained.
   3. Where selectivity cannot be achieved, the report shall indicate the cause and recommend alternative solutions. Time-current curves and points for cable and equipment damage and symmetrical and asymmetrical fault currents.
   4. Circuit interrupting device operating and interrupting times.
   5. Indicate maximum fault values on the graph.
   6. Sketch of bus and breaker arrangement.

3.4 ARC FLASH HAZARD ANALYSIS

A. Calculated arc flash boundaries, incident energies, and PPE requirements shall be published in the study report as well as displayed on the report one-line diagrams. Study Engineer needs to evaluate settings, make recommendations and evaluate impact to process operations. Coordinate with Owner.

B. Provide a direct printout of warning signs and labels using the study software.

3.5 STUDY FIRM

A. The report for the short circuit analysis and protective device coordination study indicating results shall be performed, stamped, and signed by an Electrical Engineer registered in the State of Arizona.

B. The CONTRACTOR shall provide the ENGINEER with submittal information for the electrical products used for the Project.

C. The ENGINEER performing the study must visit the Project site after equipment is installed and modify the study as required, and resubmit the study.

++ END OF SECTION ++

SECTION 17000

INSTRUMENTATION

PART 1 - GENERAL

1.1 SUMMARY

A. Section Includes:
   1. Provide complete instrumentation and control systems as indicated on the Drawings, in the Specifications, and as required by other Contract Documents. These documents include descriptions of functional operation and performance, as well as standards, but do not necessarily enumerate detailed specifications for all components and devices which are necessary. However, all components and devices shall be furnished and installed as required to provide complete and operable systems for accomplishing the functions and meeting the performance requirements.
   2. Scope of Work includes:
      a. Provide all instruments.
      b. Provide all control panels, programmable logic controllers (PLC) panels, SCADA consoles.
      c. Provide all communication equipment required to make the control system fully operational including, but not limited to, radios, antennas, switches, routers, hubs, protocol converters, communication cables, and communication racks and power supplies.
      d. Provide all conduit, conductors, enclosures, materials, and labor to fully interconnect and make operational all control system components.
      e. Provide power at proper voltage and amperage to all system components.
      f. Provide programming for the PLC and SCADA components.
      g. Provide start-up and commissioning assistance.
      h. Train OWNER'S personnel on proper use and maintenance of the control systems.
      i. Other equipment, materials, and work as necessary to achieve a fully tested and operational control system.

B. Products Supplied But Not Installed Under This Section:
   1. None.

C. Products Installed But Not Supplied Under This Section:
   1. Instruments and controls provided loose for field installation by packaged equipment or skid-mounted equipment vendors.

D. Related Sections:
   1. All Division 16 Specifications provided for this Project.
   2. All Division 17 Specifications provided for this Project.

3. Other division Specifications provided for this project as they relate to Submittals, concrete, structural, piping/plumbing, mechanical, and HVAC systems.

E. Allowances:
   1. Not applicable this Section.

F. Unit Prices:
   1. Not applicable this Section.

G. Measurement Procedures:
   1. Not applicable this Section.

H. Special Payment Procedures:
   1. Not applicable this Section.

I. Alternates/Alternatives:
   1. All alternates, alternatives, or proposed substitutions of materials or equipment must be approved by ENGINEER.

1.2 REFERENCES

1.3 DEFINITIONS

A. The word "provide" means "furnish and install".

B. PLC means Programmable Logic Controller.

C. SCADA means Supervisory Control and Data Acquisition System.

1.4 SYSTEM DESCRIPTION

A. Design Requirements:
   1. Using sound engineering principals and current best design practices, provide engineering Drawings, and design documents specifying system components and detailing their interconnection and installation.

B. Performance Requirements:
   1. The instrumentation and control systems shall be furnished and installed complete and ready to operate, including all necessary interconnections and connections to sources of electrical power, air, water, drains and vents, with all required valves, switches and accessories as specified or as recommended for best operation by the manufacturer of the equipment furnished.

1.5 SUBMITTALS

A. General:

1. Submittals for the equipment shall be provided in accordance with Section 16000, General Electrical Requirements, and as required elsewhere in the Contract Documents.

B. Product Data:
   1. Detailed catalog information for all system components in sufficient detail so that ENGINEER has sufficient information to determine if the equipment is acceptable for the intended purpose. Minimum information shall be:
      a. Instrument or equipment tag number.
      b. Manufacturer.
      c. Model number.
      d. Materials of construction.
      e. Materials in contact with process fluids.
      f. Dimensional information.
      g. Weight.
      h. Power consumption with required voltage and ampacity.
      i. Heat dissipation if greater than 200 watts.
      j. Process connection information detailing connection size, and type (threaded, flanged, socket weld, etc.).
      k. Recommended mounting details.
      l. Recommended spare parts for one year of operation.
   2. Instrument Data Sheets in ISA S20 format for all instruments.

C. Shop Drawings:
   1. For complex control systems consisting of mechanical, electrical, and control components, provide the following:
      a. A piping and instrument diagram in ISA format.
      b. Electrical load calculations with conduit and conductor sizing.
   2. For integrated control panels or control assemblies, provide the following:
      a. Dimensioned layout of the control enclosure and mounted equipment and instruments.
      b. Full bill of material for all components with detailed catalog information on all components.
      c. 11-inch by 17-inch fully developed schematic diagram(s) showing power and control wiring, terminal block assignments, and identifying field and enclosure wiring. Provide a drawing index and symbols and legend sheet with all schematics. Show all Input/Output (I/O) card details including rack, slot, channel numbers, field termination points, and control power wiring. Label all conductors and identify conductor size and color. Identify all field devices by tag number and by description. Provide over current protection in accordance with NEC requirements.
      d. 11-inch by 17-inch instrument loop drawings in ISA format for all analog control loops. Alternatively, multiple loops may be combined on a single analog input or analog output I/O card schematic diagram.
      e. Nameplate legend.

f. Paint color and type for painted assemblies.

3. Any special installation details.
4. Submit for approval the following:
   a. A copy of this specification section, with addendum updates included, and all referenced and applicable sections, with addendum updates included, with each paragraph check-marked to indicate specification compliance or marked to indicate requested deviations from specification requirements. Check marks (✓) shall denote full compliance with a paragraph as a whole. If deviations from the specifications are indicated, and therefore requested by the CONTRACTOR, each deviation shall be underlined and denoted by a number in the margin to the right of the identified paragraph, referenced to a detailed written explanation of the reasons for requesting the deviation. The ENGINEER shall be the final authority for determining acceptability of requested deviations. The CONTRACTOR shall furnish equipment and/or services as specified if an exception and/or deviation is rejected. The remaining portions of the paragraph not underlined will signify compliance on the part of the CONTRACTOR with the specifications. Failure to include a copy of the marked-up specification sections, along with justification(s) for any requested deviations to the specification requirements, with the submittal shall be sufficient cause for rejection of the entire submittal with no further consideration.
   b. The CONTRACTOR shall submit the preventive maintenance information package as part of the shop drawing submittal package to the ENGINEER for review and approval. **SHOP DRAWING SUBMITTAL PACKAGE WILL NOT BE APPROVED WITHOUT ACCEPTANCE OF PREVENTIVE MAINTENANCE INFORMATION.**

D. Samples:
   1. Not applicable for this Section.

E. Quality Assurance/Control Submittals:
   1. Design Data, Test Reports:
      a. Submit calibration sheets for all field instruments containing the following information:
         1) Instrument tag number.
         2) Instrument manufacturer and model number.
         3) Person who performed the calibration.
         4) Manufacturer, model, and serial number of the calibrating device.
         5) Date that calibrating device was last calibrated.
         6) For analog instruments, process range and associated analog signal in at least five increments (For example: 4 mA DC/0 psig, 8 mA DC/25 psig, 12 mA DC/50 psig, 16 mA DC/75 psig, 20 mA DC/100 psig).

7) For switches, process values at which the switch changes state and at which the switch resets.
8) For instruments calibrated by manufacturer, manufacturer's calibration report is acceptable as proof of calibration.

b. Factory acceptance test reports on all fabricated control panels or assemblies containing the following information:
1) Date of test.
2) Test participants.
3) Visual inspection of components.
4) Successful application of power.
5) Validation of all internal wiring.
6) Validation of correct control operation.
7) Validation of screen graphics or alarm operation (if applicable)
8) Validation of program installation into PLC's and that I/O is functioning properly (if applicable).

2. Certificates, Manufacturer's:
a. UL 508 certification for all assembled control panels and assemblies.
3. Instructions, Manufacturer's Field:
a. Furnish a complete Operations and Maintenance Manual for all assembled control panels and assemblies.
4. Reports:
a. Not applicable to this Section.

F. Closeout Submittals:
1. Furnish Operations and Maintenance Manuals in 3-ring binders complete with the following:
a. On front and spine of binders provide the project name, OWNER'S name and Project number.
b. Within the binder, identify the CONTRACTOR and provide contact information.
c. Inside binders, provide a volume index and table of contents for each binder. Each instrument or control component tag number must be cross-referenced to a specific binder tab.
d. Furnish manufacturers complete operations and maintenance manuals for all discrete instruments and controls.
e. Furnish custom operations and maintenance Section for each custom control system, control panel, or fabricated assembly.
f. Furnish "As-Built" loop and wiring diagrams.
g. Furnish the written warranty.
2. Turn over all spare parts to OWNER with documentation showing which instrument or control system the spare parts are for.

G. Schedule:
1. Submit a detailed Work schedule showing start/finish dates, task duration, task sequencing, critical path, and available float. Identify task predecessors and identify coordination activities with other trades.

H. Start-up and Commissioning Plan:
   1. Submit a detailed start-up and commissioning plan for review by OWNER and ENGINEER. Plan should include the following information:
      a. The order in which the various plant systems will be started up
      b. What work must be performed prior to the start-up
      c. What documentation will be maintained by the CONTRACTOR and provided to the OWNER validating that the start-up was performed in a safe and efficient manner. Submit examples of proposed start-up and commissioning documentation.

1.6 QUALITY ASSURANCE

A. Qualifications:
   1. CONTRACTOR performing the Work shall have a minimum five years experience performing similar work in similar industries. All CONTRACTOR'S personnel shall be trained and experienced in best current construction practices.

B. Regulatory Requirements:
   1. Perform all Work in accordance with all applicable national and local codes.

C. Certifications:
   1. Not applicable this Section.

D. Field Samples:
   1. Not applicable this Section.

E. Mock-Ups:
   1. Not applicable this Section:

F. Pre-Installation Meetings:
   1. Not applicable this Section.

1.7 DELIVERY, STORAGE, AND HANDLING

A. Packing, Shipping, Handling, and Unloading:
   1. Perform these activities in a manner which assures instruments and equipment will arrive undamaged and in proper working order. Replace any instrument or equipment damaged upon arrival at no additional cost to OWNER.

B. Acceptance at Site:
   1. Maintain a comprehensive log by instrument or equipment tag number of all received instruments or equipment.

C. Storage and Protection:

1. Store all instruments and equipment as recommended by manufacturer. Protect from physical damage, moisture, dirt/dust, or extremes of temperature.

1.8 PROJECT/SITE COORDINATIONS

A. Environmental Requirements:
   1. Follow any and all environmental requirements pertaining to the site.
   2. Maintain a safe and clean job site.
   3. Dispose of all trash and construction debris in an approved manner.

B. Existing Conditions:
   1. CONTRACTOR is to examine the site and be thoroughly familiar with any site requirements which may affect the Work or storage of instruments or equipment.

1.9 SEQUENCING

A. Coordinate all Work with other trades.

1.10 SCHEDULING

A. Provide and maintain a detailed schedule for performance of the Work identifying start/finish dates, durations, required preceding activities, and coordination with other trades. Organize procurement, deliveries, and staff labor to meet the overall construction schedule and to assure that other trades are not delayed.

1.11 WARRANTY

A. Instrumentation:
   1. One year from system acceptance by OWNER for all discrete instrumentation, control devices, or equipment. During this period, replace any defective or malfunctioning device with 15 working days after notification by OWNER.
   2. One year from system acceptance by OWNER for the performance of the overall control system. Correct the defect within 15 working days after notification by OWNER. Warranty repair work includes but is not limited to the following:
      a. Improper sequencing or interlocking of equipment control systems.
      b. Wiring errors or omissions.
      c. Improper calibration of field instruments.
      d. Improper operation of programmable logic controllers or operator interface terminals.
      e. Improper operation of communications systems installed as part of the overall control system.
      f. Unsafe operations or maintenance conditions.

g. Other system malfunctions which prevent or impair the plant from operating at design capacity, requires excessive operator intervention, or results in unsafe operating conditions.

1.12 SYSTEM START-UP/COMMISSIONING

A. General:
   1. Provide labor, tools, and equipment to start up the facility in a safe and efficient manner.
   2. Plant shall be started up by system. A system is defined as a collection of mechanical, electrical, and controls equipment configured to perform a specific function or purpose. Examples may be a UV disinfection system, a dissolved oxygen blower system, a grit removal system, etc. The order in which the systems will be started shall be submitted by CONTRACTOR in the start-up Plan and approved by OWNER and ENGINEER. Any variance in this schedule must be approved by OWNER and ENGINEER.
   3. Unless approved otherwise by OWNER and ENGINEER, CONTRACTOR is to follow the start-up sequence detailed below. The following Work must be complete prior to beginning the start-up:
      a. All mechanical equipment installed and tested in accordance with manufacturer's recommendations.
      b. All motors must have been rotation checked.
      c. Electrical power is available and wired to all mechanical equipment.
      d. All instruments must have been calibrated and installed in accordance with the manufacturer's recommendations.
      e. Control system communication systems are installed and fully operational. This includes Modbus Plus networks, Ethernet networks, radio telemetry systems, telephone systems, etc.
      f. All power and control wiring must be installed, rung out, and validated to be in accordance with approved Construction Drawings.
      g. Programmable logic controllers, SCADA computers, and Operator Interface Terminals all are installed, have their programs installed, and these devices are fully operational and functioning in their design configuration.

B. System Start-up Sequence:
   1. By manipulation of the instrument or direct signal injection at the instrument, verify that the control signal (discrete or analog) is received at the programmable logic controller or by the hard wired control circuit.
   2. For motorized equipment, disconnect the power leads at the starter, VFD, or solid state motor controller.
   3. Completely exercise the control circuit in Manual, Remote, and Automatic modes and verify that all interlocks and permissives are functioning correctly.

4. Verify that the programmable logic controller can start and stop the motor in Auto. Motors may be "bumped" by forcing PLC outputs but these program forces must be removed immediately afterward.
5. Verify that run status, signal levels, and alarms display properly on the OIT and the SCADA screens.
6. Reconnect the motor power leads.
7. Verify PID loop operating correctly (either direct or reverse) and adjust gain constants to achieve critically damped operation.
8. Configure the mechanical system for normal operation and leave system ready for normal operation.
9. Utilize colored tagging scheme to identify start-up condition. Red is not ready for start-up, yellow is mechanically and electrically ready but not yet tested or started up, and green is fully tested and ready for normal operation. Place these tags on all mechanical, electrical, instrumentation, and control components of each system.
10. As plant systems are started up, coordinate and remedy any coordination or interface issues between systems.

C. Remedies for Damages:
1. CONTRACTOR is liable for any and all damage done to mechanical or electrical equipment due to improper start-up procedures and shall repair or replace any damaged equipment at OWNER'S discretion without additional cost to OWNER.
2. CONTRACTOR is forbidden to jumper around any process or safety interlock either with wiring or within a PLC program without the express written permission of both the OWNER and ENGINEER. All jumpers, hardwired and programmed, must be maintained in a log book. Entries shall include:
   a. Name of person placing the jumper.
   b. Date of installation.
   c. Reason for installation.
   d. Approval of OWNER and ENGINEER.
   e. Date of removal.
   f. Name of person removing the jumper.

1.13 OWNER'S INSTRUCTIONS

A. Not applicable this Section.

1.14 MAINTENANCE

A. Extra Materials:
1. Not required this Section.

B. Maintenance Service:
1. Not required this Section.

PART 2 - PRODUCTS

2.1 MANUFACTURERS

A. Approved manufacturers are listed in the other electrical and instrument Specification Sections.

2.2 EXISTING PRODUCTS

A. Not applicable this Section.

2.3 MATERIALS

A. All materials are to be new and the manufacturer's most current model.

2.4 MANUFACTURED UNITS

A. Manufactured units are to be fully assembled and tested at the point of manufacture and delivered to the job site ready for installation and start-up.

B. Regulated DC power supplies for instrument loops shall be designed and arranged so that loss of one supply does not affect more than one instrument loop or system. Power supplies shall be suitable for an input voltage variation of ±10%, and the supply output shall be fused or short circuit protected. Output voltage regulation shall be as required by the instrumentation equipment being supplied. Multi-loop, or multi-system power supplies, will be acceptable if backup power supply units are provided which will automatically supply the load upon failure of the primary supply. The backup supply systems shall be designed so that either the primary or backup supply can be removed, repaired, and returned to service without disrupting the instrument system operation.

C. The power distribution from multi-loop supplies shall be selectively fused such that a fault in one instrument loop will be isolated from the other loops being fed from the same supply. Fuses shall be clearly labeled and located for easy access. Multi-loop supply systems shall be oversized for an additional 20% future load. Failure of a multi-loop supply shall be indicated on the respective instrument panel or enclosure.

2.5 EQUIPMENT

A. All equipment is to be new and the manufacturers most current model. All instruments and control devices and assemblies shall be standard devices constructed of corrosion-resistant materials enclosed in a water and dust proof case and mounted as specified in the individual application. Enclosures shall be manufacturer's standard color unless specified otherwise.

2.6 COMPONENTS

A. Not applicable this Section.

2.7 ACCESSORIES

A. Not applicable this Section.

2.8 MIXES

A. Not applicable this Section.

2.9 FABRICATION

A. Shop Assembly:
   1. Fabricate assemblies in accordance with approved Drawings. Notify ENGINEER and OWNER at least five working days prior to start of testing so that they may witness the testing if they choose to do so.

2.10 FINISHES

A. General:
   1. Finishes for all components, equipment, and fabricated assemblies must take into account the environment in which they will be installed. NEMA ratings must be appropriate for the environment. Ratings for corrosive areas must be NEMA 4X 316SS, for outdoor or wet areas NEMA 4X 316SS, indoor areas may be NEMA 12.

B. Shop Finishing:
   1. Where called for in other sections, sandblast, prime, and paint assemblies.

2.11 SOURCE QUALITY CONTROL

A. Fabrication/Tolerances:
   1. In accordance with generally accepted manufacturing standards.

B. Tests, Inspections:
   1. In accordance with generally accepted manufacturing standards.

C. Verification of Performance:
   1. Not applicable this Section.

PART 3 - EXECUTION

3.1 ACCEPTABLE INSTALLERS

A. CONTRACTORS having a minimum five years experience in the design, procurement, and construction of industrial water/wastewater instrumentation and control systems.

3.2 EXAMINATION

A. Site Verification of Conditions:
   1. Visit job site and ascertain any environmental or physical conditions which may affect the performance of the Work or the equipment requirements.

3.3 PREPARATION

A. Protection:
   1. Not applicable this Section.

B. Surface Preparation:
   1. Not applicable this Section.

3.4 ERECTION

A. Provide 4-inch tall reinforced concrete housekeeping pads for all control panels and floor-mounted fabricated control assemblies and consoles. Dowel into concrete base and extend a minimum of 2-inches past edges of equipment.

B. Provide Unistrut or fabricated structural supports, to match the environment, for heavy equipment or assemblies. Prime and paint supports so that they are unaffected by the environment in which they are installed.

C. Securely fasten all panels and assemblies to their housekeeping pads or structural supports.

D. All interconnecting wiring shall be run in conduit in accordance with the Division 16 Electrical, Sections requirements.

3.5 INSTALLATION

A. Install all instruments and controls in accordance with manufacturer's recommendations and all applicable electrical codes and standards. Connect all required utilities including electrical power, air, hydraulics, etc.

B. Provide stainless steel tags for each instrument engraved with instrument tag number. Attach to instrument with stainless steel wire.

C. Provide engraved nameplates for all panel-mounted instruments. Attach to panel with stainless steel screws.

3.6 APPLICATION

A. Not applicable this Section.

3.7 CONSTRUCTION

A. Special Techniques:

B. In accordance with manufacturers recommended installation procedure.

C. Interface with Other Work:

D. Coordinate with all other trades.

E. Sequences of Operation:

F. Not applicable this Section.

G. Site Tolerances:
   1. Not applicable this Section.

3.8 REPAIR/RESTORATION

A. Repair any damages caused by the installation or erection to original condition.

3.9 INSTALLATION

A. Not applicable this Section.

3.10 FIELD QUALITY CONTROL

A. Site Tests:
   1. Test and calibrate instrumentation in accordance with other parts of this Section.

B. Inspection:
   1. Not required this Section.

C. Manufacturer's Field Services:
   1. If recommended by manufacturer, have equipment/control systems inspected, tested, and started up by manufacturer's representative.

3.11 ADJUSTING

A. Not required this Section.

3.12 CLEANING

A. Remove and dispose of construction debris daily. Wipe down and vacuum out all enclosures.

3.13 DEMONSTRATION/TRAINING

A. In accordance with the Start-up part of this Section.

B. Provide training of personnel in the operation and maintenance of the furnished control systems.

C. Training shall be provided as required elsewhere in the Contract Documents, but shall consist of at least eight hours, in a single, or multiple sessions, to accommodate the personnel schedules.

D. Coordinate with the ENGINEER, and the OWNER, to schedule the training sessions at least five workings days in advance.

3.14 PROTECTION

A. Protect instrumentation and control equipment from environmental damage and from damage by other trades.

3.15 SCHEDULES

A. Not applicable this Section.

++ END OF SECTION ++

SECTION 17111

FLOAT SWITCHES

PART 1 - GENERAL

1.1 SCOPE

A. This Section includes furnishing all float switches as indicated on the Drawings and specified herein.

B. Related work specified elsewhere includes, but is not limited to, Section 16000, General Electrical Requirements. Also refer to requirements of Contract Documents for testing, adjusting, and balancing of systems.

1.2 QUALITY ASSURANCE

A. Equipment to be furnished under this Section shall be the product of firms regularly engaged in the design and manufacture of this type of equipment. Manufacturer shall assume responsibility for, and guarantee performance of equipment furnished. However, this shall not be construed as relieving the CONTRACTOR from responsibility for the proper installation and functioning of the Work.

1.3 SUBMITTALS

A. The following material shall be submitted to the ENGINEER prior to installation, in accordance with Section 16000, General Electrical Requirements, and as required elsewhere in the Contract Documents:
   1. Where applicable, provide complete manufacturer's part number, identifying scaling, operating range, housing and wetted parts materials, NEMA rating, product options, consumable materials, and other pertinent information.
   2. Prior to Final Acceptance of the Work, the CONTRACTOR shall provide Operations and Maintenance Manuals, in accordance with the Contract Documents.

B. Shop Drawings: Submit for approval the following:
   1. A copy of this specification section, with addendum updates included, and all referenced and applicable sections, with addendum updates included, with each paragraph check-marked to indicate specification compliance or marked to indicate requested deviations from specification requirements. Check marks (✓) shall denote full compliance with a paragraph as a whole. If deviations from the specifications are indicated, and therefore requested by the CONTRACTOR, each deviation shall be underlined and denoted by a number in the margin to the right of the identified paragraph, referenced to a detailed written explanation of the reasons for requesting the deviation. The

ENGINEER shall be the final authority for determining acceptability of requested deviations. The CONTRACTOR shall furnish equipment and/or services as specified if an exception and/or deviation is rejected. The remaining portions of the paragraph not underlined will signify compliance on the part of the CONTRACTOR with the specifications. Failure to include a copy of the marked-up specification sections, along with justification(s) for any requested deviations to the specification requirements, with the submittal shall be sufficient cause for rejection of the entire submittal with no further consideration.

2. The CONTRACTOR shall submit the preventive maintenance information package as part of the shop drawing submittal package to the ENGINEER for review and approval. **SHOP DRAWING SUBMITTAL PACKAGE WILL NOT BE APPROVED WITHOUT ACCEPTANCE OF PREVENTIVE MAINTENANCE INFORMATION.**
3. Submit complete Operation and Maintenance Manuals in conformance with the Operation and Maintenance Manuals section of Section 01300, Submittals.

PART 2 - PRODUCTS

2.1 BALL TYPE FLOAT WITH INTEGRAL SNAP SWITCH AND ATTACHED CABLE

A. Float switch shall be direct acting and consist of a 316 type stainless steel housing, mounting clamp, a flexible three-conductor cable with a synthetic rubber jacket and a magnetic reed switch. The float housing shall be a sphere of at least 4-1/2-inches in diameter.

B. The magnetic reed switch shall be embedded in a metal housing inside the float. The cable shall be 3/C #14, SO Type with 105 strands per conductor, made specifically for underwater use and heavy flexing service.

C. The magnetic reed switch shall be connected to two of the three conductors of the cable. The third conductor shall be an internal ground and shall be colored green. The switch shall have a 20 ampere rating at 115 volts AC.

D. An additional synthetic rubber jacket shall act as a hinge between the float and where the cable is held by the stationary clamp. This clamp shall be stainless steel with an adapting fitting and two yokes for mounting on a vertical 1-inch pipe.

E. A liquid rise of 1-inch from the reset position shall operate the float switch, and reset shall occur when the liquid level drops to 1-inch. Operating temperature shall be 0° F to +180° F.

F. Weight and buoyancy shall be such that contaminants like a cake of grease will not result in the float switch changing operating level more than 1-inch.

G. A Stainless Steel, NEMA 4X 316SS junction box shall be supplied for termination of the float cable(s), to allow conventional wiring and conduit to be run from the junction box to a control panel. It shall have terminal blocks for the required number of circuits and shall accept sealed fittings furnished with the float switch.

H. Float switches shall be as manufactured by US Filter Model 9G, Flygt Model ENM-10, or equal.

PART 3 - EXECUTION

3.1 INSTALLATION

A. Equipment and materials specified in this Section shall be installed and connected as specified and as shown on the Drawings. CONTRACTOR shall coordinate with Mechanical Engineer and Structural Engineer for optimum location of float switches.

3.2 ACCEPTANCE

A. Prior to Final Acceptance of the Work, the CONTRACTOR shall certify the equipment and installation included under this Section to be free of defects, and suitable for trouble-free operation under the conditions set forth in these Specifications.

++ END OF SECTION ++

SECTION 17120

PRESSURE TRANSMITTERS

PART 1 - GENERAL

1.1 SCOPE

A. This Section includes furnishing pressure transmitters as shown on the Drawings and specified herein.

B. Related Work specified elsewhere includes, but is not limited to Section 16000, General Electrical Requirements. Also refer to requirements of Contract Documents for testing, adjusting, and balancing of systems.

1.2 QUALITY ASSURANCE

A. Equipment to be furnished under this Section shall be the product of firms regularly engaged in the design and manufacture of this type of equipment. Manufacturer shall assume responsibility for, and guarantee performance of equipment furnished. However, this shall not be construed as relieving the CONTRACTOR from responsibility for the proper installation and functioning of the Work.

1.3 SUBMITTALS

A. The following material shall be submitted to the ENGINEER prior to installation, in accordance with Section 16000, General Electrical Requirements, and as required elsewhere in the Contract Documents:
   1. Where applicable, provide complete manufacturer's part number, identifying scaling, operating range, housing and wetted parts materials, NEMA rating, product options, consumable materials, and other pertinent information.
   2. Prior to Final Acceptance of the Work, the CONTRACTOR shall provide Operations and Maintenance Manuals, in accordance with the Contract Documents.

B. Shop Drawings: Submit for approval the following:
   1. A copy of this specification section, with addendum updates included, and all referenced and applicable sections, with addendum updates included, with each paragraph check-marked to indicate specification compliance or marked to indicate requested deviations from specification requirements. Check marks (✓) shall denote full compliance with a paragraph as a whole. If deviations from the specifications are indicated, and therefore requested by the CONTRACTOR, each deviation shall be underlined and denoted by a number in the margin to the right of the identified paragraph, referenced to a detailed written explanation of the reasons for requesting the deviation. The

ENGINEER shall be the final authority for determining acceptability of requested deviations. The CONTRACTOR shall furnish equipment and/or services as specified if an exception and/or deviation is rejected. The remaining portions of the paragraph not underlined will signify compliance on the part of the CONTRACTOR with the specifications. Failure to include a copy of the marked-up specification sections, along with justification(s) for any requested deviations to the specification requirements, with the submittal shall be sufficient cause for rejection of the entire submittal with no further consideration.

2. The CONTRACTOR shall submit the preventive maintenance information package as part of the shop drawing submittal package to the ENGINEER for review and approval. **SHOP DRAWING SUBMITTAL PACKAGE WILL NOT BE APPROVED WITHOUT ACCEPTANCE OF PREVENTIVE MAINTENANCE INFORMATION.**
3. Submit complete Operation and Maintenance Manuals in conformance with the Operation and Maintenance Manuals section of Section 01300, Submittals

1.4 MANUFACTURERS

A. Rosemount model 3051.

B. Or Engineer approved equal.

PART 2 - PRODUCTS

2.1 PRESSURE TRANSMITTER

A. Provide pressure transmitters with 1/2-inch NPT process connection, block and bleed valve, and local LCD indicator scaled in engineering units.

B. Transmitters shall be of a two-wire type, 24 VDC powered, producing a 4 mA to 20 mA output proportional to the calibrated pressure range of the instrument. Transmitters shall be capable of driving a 500 ohm loop load.

C. Instrument accuracy shall be within plus or minus 0.5% of span, and 0.2% repeatability. Dead band shall be within 0.1 percent of span.

D. Transmitters shall have external zero and span adjustment for field calibration. Instrument enclosure shall be NEMA 4, with 316 stainless steel wetted parts.

E. Diaphragm seals shall be manufactured by Ashcroft, or equal.

PART 3 - EXECUTION

3.1 INSTALLATION

A. Equipment and materials specified in this Section shall be installed, connected, and tested in accordance with the manufacturers' recommendations, and as shown on the Drawings. CONTRACTOR shall coordinate with other trades to insure proper connection to piping and other mechanical equipment.

3.2 ACCEPTANCE

A. Prior to Final Acceptance of the Work, the CONTRACTOR shall certify the equipment and installation included under this Section to be free of defects, and suitable for trouble-free operation.

++ END OF SECTION ++

SECTION 17121

PRESSURE SWITCHES AND GAUGES

PART 1 - GENERAL

1.1 SCOPE

A. This section covers pressure switches and differential pressure switches as shown on the Drawings.

B. Related Work specified elsewhere includes, but is not limited to Section 16000, General Electrical Requirements. Also refer to requirements of General Conditions for testing, adjusting, and balancing of systems.

1.2 QUALITY ASSURANCE

A. Equipment to be furnished under this Section shall be the product of firms regularly engaged in the design and manufacture of this type of equipment. Manufacturer shall assume responsibility for and guarantee performance of the equipment furnished. However, this shall not be construed as relieving the CONTRACTOR from responsibility for the proper installation and functioning of the equipment.

B. Reference standards shall be the latest edition, including addenda, supplements, and revision. Applicable reference publications include the following:
   1. NEC.
   2. NEMA.

1.3 SUBMITTALS

A. Submit product information cut sheets containing manufacturer's specifications, operations and maintenance data, instrument enclosure type, installation location, and process pressure range to be supplied. Indicate product part number in full.

B. Provide Submittals in accordance with Section 16000, General Electrical Requirements, and elsewhere in the Contract Documents.

C. Shop Drawings: Submit for approval the following:
   1. A copy of this specification section, with addendum updates included, and all referenced and applicable sections, with addendum updates included, with each paragraph check-marked to indicate specification compliance or marked to indicate requested deviations from specification requirements. Check marks (✓) shall denote full compliance with a paragraph as a whole. If deviations from the specifications are indicated, and therefore requested by the CONTRACTOR, each deviation shall be underlined and denoted by a

number in the margin to the right of the identified paragraph, referenced to a detailed written explanation of the reasons for requesting the deviation. The ENGINEER shall be the final authority for determining acceptability of requested deviations. The CONTRACTOR shall furnish equipment and/or services as specified if an exception and/or deviation is rejected. The remaining portions of the paragraph not underlined will signify compliance on the part of the CONTRACTOR with the specifications. Failure to include a copy of the marked-up specification sections, along with justification(s) for any requested deviations to the specification requirements, with the submittal shall be sufficient cause for rejection of the entire submittal with no further consideration.

2. The CONTRACTOR shall submit the preventive maintenance information package as part of the shop drawing submittal package to the ENGINEER for review and approval. **SHOP DRAWING SUBMITTAL PACKAGE WILL NOT BE APPROVED WITHOUT ACCEPTANCE OF PREVENTIVE MAINTENANCE INFORMATION.**
3. Submit complete Operation and Maintenance Manuals in conformance with the Operation and Maintenance Manuals section of Section 01300, Submittals.

PART 2 - PRODUCTS

2.1 PRESSURE SWITCHES

A. Pressure switches shall be capable of dual control with independent setpoints and adjustable deadbands. Differential pressure switches shall be capable of single control with adjustable setpoints and adjustable deadband. Switches shall be snap action, single-pole, double-throw switching elements with an electrical rating of at least 10 amperes at 120 VAC. Pressure switches shall be enclosed in a NEMA 4 or weatherproof housing.

B. Operating pressures and setpoints shall be determined in the field, unless otherwise indicated on the Drawings.

C. Setpoints shall be fully adjustable and shall be in the middle of the working range. Setpoint adjustments shall be made with adjustment screws or thumbwheels. Accuracy shall be ±1% of adjustable range.

D. For pressures up to 150 psig pressure sensing element shall be of the diaphragm or bourdon tube type, and shall have a proof pressure of at least twice the maximum working pressure. For pressures above 150 psig, sensing element shall be bourdon tube type. Diaphragms or bourdon tubes shall be stainless steel.

E. Pressure switches shall be installed with individual ball valves for isolation. Valve material shall be compatible with the process piping and process fluid. In

addition, process piping up to the sensor shall be insulated to protect against freezing.

F. Pressure switches shall be as manufactured by:
   1. Mercoid, DA/DS Series.
   2. Ashcroft.
   3. Barton.

G. Differential pressure switches shall be as manufactured by Mercoid Controls, Series DPAW.

H. Diaphragm seals shall be manufactured by Mercoid.

2.2 PRESSURE GAUGE

A. Manufacturer: One of the following or equal:
   1. Ashcroft.
   2. Wika.

B. Gauge Properties:
   1. Pressure gauges shall be a direct reading mechanical type indicator with a nominal 6-inch diameter dial engraved over a 270 degree arc.
   2. Gauge scale range shall be 0 to 200 with scale units in (psi) and shall be engraved on the scale face. Scale will have 2 psi graduations.
   3. The gauge indicator housing shall be oil-filled.
   4. The indicator shall have a weatherproof housing with a Type 316 stainless steel body.
   5. Accuracy of the indicator shall be 1.0 percent of full scale.
   6. Process connection: 1/2-inch NPT.

C. Diaphragm seals shall be manufactured by gauge manufacturer as indicated in the drawing set.

PART 3 - EXECUTION

3.1 INSTALLATION

A. Equipment and materials specified in this Section shall be installed and connected as specified and shown on the drawings. CONTRACTOR shall coordinate with Mechanical Engineer and Piping Engineer to insure proper connection to piping and/or other mechanical equipment.

3.2 ACCEPTANCE

A. As a condition precedent to Final Acceptance of the Work, the CONTRACTOR shall certify the equipment and installation included under this section to be free

of defects, and suitable for trouble-free operation under the conditions set forth in these Specifications. This requirement is in addition to the manufacturer's guarantee.

++ END OF SECTION ++

SECTION 17122

LEVEL TRANSMITTERS - PRESSURE TYPE

PART 1 - GENERAL

1.1 SCOPE

A. Provide all labor, materials, equipment and incidentals as shown, specified and required to furnish, install, calibrate, test, adjust, commission and place into satisfactory operation all primary sensors and field instruments furnished under this Section.

B. Contract Documents illustrate and specify functional and general construction requirements of the sensors and field instruments and do not necessarily show or specify all components, wiring, piping and accessories required to make a completely integrated system. Provide all components, piping, wiring, accessories and labor required for a complete, workable and integrated system.

C. Coordinate the installation of all items specified herein and required to ensure the complete and proper interfacing of all the components and systems.

D. Related work specified elsewhere includes, but is not limited to Section 16000, electrical. Also refer to requirements of Contract Documents for testing, adjusting and balancing of systems.

1.2 QUALITY ASSURANCE

A. Equipment to be furnished under this section shall be the product of firms regularly engaged in the design and manufacture of this type of equipment. Manufacturer shall assume responsibility for, and guarantee performance of equipment furnished. However, this shall not be construed as relieving the Contractor from responsibility for the proper installation and functioning of the work.

1.3 SUBMITTALS

A. The following material shall be submitted to the Engineer prior to installation, in accordance with Section 16000, and as required elsewhere in the Contract Documents:
   1. Where applicable, provide complete manufacturer's part number, identifying scaling, operating range, housing and wetted parts materials, NEMA rating, product options, consumable materials, and other pertinent information.
   2. Prior to Final Acceptance of the work, the Contractor shall provide Operations and Maintenance Manuals, in accordance with the Contract Documents.

1.4 MANUFACTURERS

A. Product and Manufacturers: Provide one of the following:
   1. Model IGP20, as manufactured by Foxboro
   2. No equal.

PART 2 - PRODUCTS

2.1 LEVEL TRANSMITTER

A. Type: Two-wire, capacitance type, direct mount gage pressure indicating transmitter with single seal or closed coupled diaphragm seal.

B. Required Features and Accessories:
   1. Accuracy (includes combined effects of linearity, hysteresis and repeatability): ±0.075 percent of calibrated span.
   2. Stability (drift over a six month period): Not more than ±0.25 percent of transmitter's upper range limit.
   3. Ambient Temperature Effect: Total Error per 100°F change between the limits of -20°F and +180°F: Not more than ±1.0 percent of the transmitter upper range limit (maximum span).
   4. Supply Voltage Effect: Output change not greater than 0.005 percent of span for each one-volt change in supply voltage.
   5. Output:
      a. Isolated direct acting 4 to 20 mADC, Plus Hart digital signal.
      b. Digital process variable signal superimposed on 4 to 20 mADC signal without compromising loop integrity.
      c. Zero and span adjustments.
      d. Damping adjustable 0 to 10 seconds.
   6. Solid state electronic components.
   7. Positive over range protection of at least 1.25 times the maximum span limit.
   8. Calibration Adjustments:
      a. Zero: Adjustable in electronics compartment.
      b. Span: Course and fine span adjustments in electronics compartment.
      c. Rangeability - Turndown ratio to provide a variable programmable range span.
      d. User selected linear or integral square root extraction providing linear 4 to 20 mADC output proportional to flow when required.
   9. Zero elevation and suppression capability to the extent that the amount of suppression plus calibrated span does not exceed the upper range limits of the sensor.
   10. Built-in electrical surge and RFI protection.
   11. Electrical Connection ½" – NPT.

12. When instrument is installed below grade in a valve vault use a submersible type transmitter only. Provide 24VDC pressure indicator readout above grade.
13. Power Requirements: 24 VDC (Operates on 10.5 to 55 Volts DC).
14. Process Connection: 1/2-inch NPT.
15. Non-Wetted Parts:
    a. Body and Process Connection Bolting: Type 316 stainless steel.
    b. Housing and Cover: Die cast low copper aluminum alloy finished with epoxy paint system; covers shall be threaded and seated on Buna-N O-rings; NEMA 4 / 6P rating.
    c. Capsule Fill Liquid: Silicone oil except for Chlorine and Fluoride Systems.
16. Material: All wetted parts to be 316 stainless steel or hastiloy Hastelloy C based on process fluid being measured.
17. Software Functionality:
    a. Transmitter shall be capable of digital communications over the 4 to 20mA output loop without interruption using the Hart Protocol.
    b. Transmitter shall perform continuous diagnostics, be capable of self-test functions, and be able to give specific diagnostic information.
    c. Configuration capabilities shall allow the user the ability to input and store information including range, engineering units, damping, spare root or linear output, date, message descriptor, and tag number.
18. Indicator: Provide integral indicator in engineering units when the transmitter is readily accessible.
19. Area Requirements: Provide transmitters rated for use in Class I, Division 2 hazardous areas.
20. Assembly: Where specified equipment is shown to be mounted to annular or diaphragm seals, equipment and seal shall be factory assembled, calibrated and furnished as a single unit.
21. Provide one hand held interface with keyboard and LED display capable of easily configuring and testing the transmitter.

C. Equipment Set Points / Ranges

Device	Set Point / Range - Typical Value
LIT-302	0-16 Feet
LIT-303	0-16 Feet

2.2 PROCESS TAPS, SENSING LINES AND ACCESSORIES

A. Water Pressure Sensing Lines and Accessories for Flow and Pressure Transmitters:
1. Material: Type 316 stainless steel; .049 wall thickness.
2. Pressure Rating: 250 psi.
3. Size: 1/2-inch outside diameter or as shown on the Drawings.

4. Shut-off Valves:
    a. Type: Full port ball.
    b. Pressure Rating: 250 psi.
    c. Body, Ball and Stem: Type 316 stainless steel.
    d. Packing: High Density PTFE.
    e. Handle: Nylon with metal travel stops.
    f. Support Rings: Stainless steel.
    g. Product and Manufacturer: Provide one of the following:
        1) Apollo Valves.
        2) Swagelok.
        3) Or equal.

PART 3 - EXECUTION

3.1 INSTALLATION

A. Provide the services of qualified factory-trained servicemen to assist in the installation of the instrumentation and control system equipment.

B. Install each item in accordance with manufacturer's recommendations and in accordance with the Contract Documents. Transmitters and instruments require access for periodic calibration or maintenance. Transmitters and instruments shall be mounted so they are accessible while standing on the floor.

C. All items shall be mounted and anchored using Type 316 stainless steel hardware, unless otherwise noted.

D. All field instruments shall be rigidly secured to walls, stands or brackets, as required, by the manufacturer and as shown on the Drawings.

E. Conform to all applicable provisions of the NEMA and NFPA standards, local, state and federal codes when installing the equipment and interconnecting wiring.

F. In areas prone to freezing, wrap all wetted parts of the instrument and piping with insulating material. Provide access to bleed valves and pipe fittings.

3.2 START-UP, CALIBRATION, AND TESTING AND TRAINING

A. Comply with the requirements of Section 17000, Instrumentation.

B. Calibration of Instruments:
    1. All instruments are to be field calibrated and witnessed by the ENGINEER through their entire range prior to start-up. Factory calibrated instruments are required to be recalibrated in the field prior to start-up and witnessed by the ENGINEER. Calibration Test Data Form shall be completed and submitted to document the field calibration.

C. Primary Sensors/Transducers and Field Instruments:
   1. Provide on-site operation and maintenance training by EQUIPMENT SUPPLIERS and/or the EQUIPMENT MANUFACTURER REPRESENTATIVES prior to placing the equipment in continuous operation, conforming to the requirements of Section 01650, Starting of Systems. The services of equipment manufacturer's representatives shall be provided for a minimum of 4 hours—two 2-hour sessions.
   2. Training shall accomplish the following:
      a. Provide instruction covering procedures for routine, preventive and troubleshooting maintenance and equipment calibration.

3.3 ACCEPTANCE

A. Prior to final acceptance of the work, the Contractor shall certify the equipment and installation included under this section to be free of defects, and suitable for trouble-free operation.

++ END OF SECTION ++

SECTION 17124

SUBMERSIBLE LEVEL TRANSMITTER

PART 1 - GENERAL

1.1 SCOPE OF WORK

A. This section covers the Submersible Level Transmitters to be provided where indicated on the Drawings.

B. Related work specified elsewhere includes, but is not limited to section 16000 Electrical. Also, refer to requirements of General Conditions for testing, adjusting and balancing of systems.

1.2 QUALITY

A. Equipment to be furnished under this section shall be the products of companies regularly engaged in the design and manufacture of this type of equipment. Manufacturers shall assume responsibility for, and guarantee performance of, equipment furnished. However, this shall not be construed as relieving the Contractor from their responsibility for the proper installation and functioning of the equipment.

B. Reference standards. Standards shall be the latest edition, including addenda, supplements, and revision. Applicable reference publications include the following:
   1. NEC.
   2. NEMA.

1.3 SUBMITTALS

A. Submit product information cut sheets containing manufacturer's specifications, Operations and Maintenance data, instrument enclosure type, installation location, and process pressure range to be supplied. Indicate product part number in full.

B. Provide submittals in accordance with Section 16000, and elsewhere in the Contract Documents.

C. Shop Drawings: Submit for approval the following:
   1. A copy of this specification section, with addendum updates included, and all referenced and applicable sections, with addendum updates included, with each paragraph check-marked to indicate specification compliance or marked to indicate requested deviations from specification requirements. Check marks (✓) shall denote full compliance with a paragraph as a whole. If deviations from the specifications are indicated, and therefore requested by

the CONTRACTOR, each deviation shall be underlined and denoted by a number in the margin to the right of the identified paragraph, referenced to a detailed written explanation of the reasons for requesting the deviation. The ENGINEER shall be the final authority for determining acceptability of requested deviations. The CONTRACTOR shall furnish equipment and/or services as specified if an exception and/or deviation is rejected. The remaining portions of the paragraph not underlined will signify compliance on the part of the CONTRACTOR with the specifications. Failure to include a copy of the marked-up specification sections, along with justification(s) for any requested deviations to the specification requirements, with the submittal shall be sufficient cause for rejection of the entire submittal with no further consideration.

2. The CONTRACTOR shall submit the preventive maintenance information package as part of the shop drawing submittal package to the ENGINEER for review and approval. **SHOP DRAWING SUBMITTAL PACKAGE WILL NOT BE APPROVED WITHOUT ACCEPTANCE OF PREVENTIVE MAINTENANCE INFORMATION.**
3. Submit complete Operation and Maintenance Manuals in conformance with the Operation and Maintenance Manuals section of Section 01300, Submittals.

PART 2 - PRODUCTS

2.1 SUBMERSIBLE LEVEL TRANSMITTER

A. The submersible level transmitter system shall be designed for total submersion, and shall have the following features:
   1. Accuracy of +/-0.1% of full scale.
   2. Titanium construction.
   3. Two-wire, 4 mA output at zero pressure, 20 mA output at full range pressure.
   4. Operating pressure ranges from 1 psi to 900 psi, as required by the application.
   5. Overpressure rating shall be 4 times the operating pressure range from 1 to 5 psi, and 2 times the range for 10 psi and above.
   6. Pressure transducer shall be of the integrated silicon strain gauge bridge type.
   7. Transmitter supply voltage shall be 9-30 VDC.
   8. Operating temperature shall be -20 to +60 degrees C.
   9. Transmitter shall be provided with sufficient cable length to reach terminations point shown on the Drawings.

B. Submersible level transmitter shall be Druck Inc., model PTX 1830, or equal.

PART 3 - EXECUTION

3.1 INSTALLATION

A. Equipment and materials specified in this section shall be installed and connected as specified, and as shown on the Drawings. The Contractor shall coordinate the installation with the other trades, to insure proper installation of the transmitter, and associated conduit and cables.

B. The instrument shall be factory calibrated to the proper ranges, as required by the Owner and the Engineer. Where analog signals are connected to local, or remote monitoring equipment, the Contractor shall verify that the calibrated ranges and scaling of the local and remote indicators are correct.

3.2 ACCEPTANCE

A. Prior to final acceptance of the work, the Contractor shall certify the equipment and installation included under this section to be free of defects, and suitable for trouble-free operation under the conditions set forth in these specifications. This requirement is in addition to the manufacturer's guarantee.

++ END OF SECTION ++

SECTION 17125

RADAR LEVEL TRANSMITTER

PART 1 - GENERAL

1.1 SCOPE OF WORK

A. This section covers the Radar Level Transmitters to be provided where indicated on the Drawings.

B. Related work specified elsewhere includes, but is not limited to section 16000 Electrical. Also, refer to requirements of General Conditions for testing, adjusting and balancing of systems.

1.2 QUALITY

A. Equipment to be furnished under this section shall be the products of companies regularly engaged in the design and manufacture of this type of equipment. Manufacturers shall assume responsibility for, and guarantee performance of, equipment furnished. However, this shall not be construed as relieving the Contractor from their responsibility for the proper installation and functioning of the equipment.

B. Reference standards. Standards shall be the latest edition, including addenda, supplements, and revision. Applicable reference publications include the following:
NEC
NEMA

1.3 SUBMITTALS

A. Submit product information cut sheets containing manufacturer's specifications, Operations and Maintenance data, instrument enclosure type, installation location, and process pressure range to be supplied in conformance with Section 01300, Submittals. Indicate product part number in full.

B. Provide submittals in accordance with Section 16000, and elsewhere in the Contract Documents.

PART 2 - PRODUCTS

2.1 Radar LEVEL TRANSMITTER

A. Type: Non-contact.

B. Functions:
   1. Antenna:
      a. Radiate electromagnetic pulses from the transmitter towards the metered surface.
      b. Receive the reflected signal.
   2. Transmitter:
      a. Generate and time the electrical pulses.
      b. Count and convert the pulse travel times into an analog output signal linearly proportional to level.

C. System Performance Requirements:
   1. Accuracy: Not less than ±0.3 percent of full scale.
   2. Operating range of not less than 30 feet with deadband; minimum operating range of 12-inches.
   3. Transmitter Outputs: 4 to 20 mADC, direct acting and isolated, into 750 ohms.
   4. Ambient Temperature Range: -20°C to + 50°C.
   5. Power Consumption: 15 watts maximum.

D. Required Features:
   1. Antenna: Horn with extension, length as required.
   2. Transmitter:
      a. Solid state construction.
      b. Built-in digital filtering for EMI protection.
      c. Handheld calibrator for field rangeability and recalibration.
      d. Integral backlit LCD indicator scaled in engineering units.
      e. Designed for operation on 24VDC or 120 VAC - 60 Hz power supply.
      f. Aluminum housing, NEMA 6/IP67.

E. Product and Manufacturer:
   1. IQ Radar 160, as manufactured by Siemens Milltronics.
   2. Vega Vegapuls model 69
   3. Owner approved equal

PART 3 - EXECUTION

3.1 INSTALLATION

A. Equipment and materials specified in this section shall be installed and connected as specified, and as shown on the Drawings. The Contractor shall coordinate the installation with the other trades, to insure proper installation of the transmitter, and associated conduit and cables.

B. The instrument shall be factory calibrated to the proper ranges, as required by the Owner and the Engineer. Where analog signals are connected to local, or remote

monitoring equipment, the Contractor shall verify that the calibrated ranges and scaling of the local and remote indicators are correct.

3.2 ACCEPTANCE

A. Prior to final acceptance of the work, the Contractor shall certify the equipment and installation included under this section to be free of defects, and suitable for trouble-free operation under the conditions set forth in these specifications. This requirement is in addition to the manufacturer's guarantee.

++ END OF SECTION ++

SECTION 17134

FLOW SWITCHES

PART 1 - GENERAL

1.1 SCOPE

A. This Section covers flow switches to be furnished as indicated on the Drawings.

1.2 QUALITY ASSURANCE

A. Equipment to be furnished under this Section shall be the product of firms regularly engaged in the design and manufacture of this type of equipment. Manufacturer shall assume responsibility for, and guarantee performance, of equipment furnished. However, this shall not be construed as relieving the CONTRACTOR from their responsibility for the proper installation and functioning of the Work.

1.3 SUBMITTALS

A. The following material shall be submitted to the ENGINEER in accordance with the Contract Documents, and Section 16000, General Electrical Requirements.

B. Shop Drawings: Submit for approval the following:
   1. A copy of this specification section, with addendum updates included, and all referenced and applicable sections, with addendum updates included, with each paragraph check-marked to indicate specification compliance or marked to indicate requested deviations from specification requirements. Check marks (✓) shall denote full compliance with a paragraph as a whole. If deviations from the specifications are indicated, and therefore requested by the CONTRACTOR, each deviation shall be underlined and denoted by a number in the margin to the right of the identified paragraph, referenced to a detailed written explanation of the reasons for requesting the deviation. The ENGINEER shall be the final authority for determining acceptability of requested deviations. The CONTRACTOR shall furnish equipment and/or services as specified if an exception and/or deviation is rejected. The remaining portions of the paragraph not underlined will signify compliance on the part of the CONTRACTOR with the specifications. Failure to include a copy of the marked-up specification sections, along with justification(s) for any requested deviations to the specification requirements, with the submittal shall be sufficient cause for rejection of the entire submittal with no further consideration.
   2. The CONTRACTOR shall submit the preventive maintenance information package as part of the shop drawing submittal package to the ENGINEER for review and approval. **SHOP DRAWING SUBMITTAL PACKAGE**

WILL NOT BE APPROVED WITHOUT ACCEPTANCE OF PREVENTIVE MAINTENANCE INFORMATION.

PART 2 - PRODUCTS

2.1 FLOW SWITCHES

A. Flow switches for pump discharge monitoring shall be thermal dispersion type, made of stainless steel, and shall give a no-flow signal when the flow drops below the set actuating flow rate. The flow switch enclosure shall meet NEMA 4 Standards. The switch contact output shall be SPDT rated at 4 amps. Flow switches shall be by Magnetrol or equal.

B. Eyewash and shower flow switches shall be stainless steel, installed in the potable waterline, and shall indicate eyewash or shower operation.

C. Flow switches for pump seal water lines shall actuate at 0.04 gpm to provide an indication of seal water flow to the pump. The lower housing of the switch body shall be brass, and shall be leakproof. The snap switch shall be magnetically actuated. The machined tee flow section, and other wetted parts, shall be stainless steel. An adjustable bypass valve shall set the trip point of the switch. Pipe connections shall be 1/2-inch NPT. Flow switch shall be Dwyer/Anderson Low Flow Model V6, or equal.

D. Flow switches for foul air shall be marked with a flow arrow indicating the necessary orientation in the duct, and switch DPDT contacts when the foul air flow rate is below 1500 feet per minute (requiring the full length vane). The flow switch wetted components must be stainless steel. The body will have a 1½" MNPT thread to install into a female coupling. The female coupling will be:
   1. Inserted in the duct in such a way that the full flow switch vane is visible within the ID of the duct, and
   2. The coupling will be located where the flow is horizontal, and
   3. The flow switch will be vertical within 5°.
   4. The flow switch shall be UL listed for Class I Group D, explosion proof. The flow switch shall be Dwyer/Anderson Flotect® model V4-SS-2-U-D, or equal.

PART 3 - EXECUTION

3.1 INSTALLATION

A. Equipment and materials specified in this Section shall be installed as shown on Drawings.

3.2 GUARANTEE

A. CONTRACTOR shall fully guarantee all Work under this Section for a period of one year from date of Final Acceptance by the OWNER against faulty workmanship and failure or malfunction of materials and/or equipment due to faulty or imperfect workmanship. This guarantee shall be given in writing to the OWNER at the time of issuing final certificate. Work, materials, or equipment found to be defective within this period shall be replaced without cost to the OWNER.

3.3 ACCEPTANCE

A. As a condition precedent to Final Acceptance of the Work, the CONTRACTOR shall certify the equipment and installation included under this Section to be free of defects, and suitable for trouble-free operation under the conditions set forth in these Specifications. This requirement is in addition to the manufacturer's guarantee.

++ END OF SECTION ++

SECTION 17137

MAGNETIC FLOW METERS

PART 1 - GENERAL

1.1 SCOPE OF WORK

A. This Section covers the magnetic flow meters to be provided where indicated on the Drawings. The flow meters shall consist of two parts with manufacturer supplied interconnecting wiring, the field installed flow element and the flow indicating transmitter.

B. Related Work specified elsewhere includes, but is not limited to Section 16000, General Electrical Requirements. Also, refer to requirements of Contract Documents for testing, adjusting, and balancing of systems.

1.2 QUALITY ASSURANCE

A. Equipment to be furnished under this Section shall be the product of firms regularly engaged in the design and manufacture of this type of equipment. Manufacturer shall assume responsibility for, and guarantee performance of equipment furnished. However, this shall not be construed as relieving the CONTRACTOR from responsibility for the proper installation and functioning of the Work.

1.3 SUBMITTALS

A. The following material shall be submitted to the ENGINEER prior to installation, in accordance with Section 16000, General Electrical Requirements, and as required elsewhere in the Contract Documents:
   1. Where applicable, provide complete manufacturer's part number, identifying scaling, operating range, housing and wetted parts materials, NEMA rating, product options, consumable materials, and other pertinent information.
   2. Prior to Final Acceptance of the Work, the CONTRACTOR shall provide Operations and Maintenance Manuals, in accordance with the Contract Documents.

B. Shop Drawings: Submit for approval the following:
   1. A copy of this specification section, with addendum updates included, and all referenced and applicable sections, with addendum updates included, with each paragraph check-marked to indicate specification compliance or marked to indicate requested deviations from specification requirements. Check marks (✓) shall denote full compliance with a paragraph as a whole. If deviations from the specifications are indicated, and therefore requested by the CONTRACTOR, each deviation shall be underlined and denoted by a

number in the margin to the right of the identified paragraph, referenced to a detailed written explanation of the reasons for requesting the deviation. The ENGINEER shall be the final authority for determining acceptability of requested deviations. The CONTRACTOR shall furnish equipment and/or services as specified if an exception and/or deviation is rejected. The remaining portions of the paragraph not underlined will signify compliance on the part of the CONTRACTOR with the specifications. Failure to include a copy of the marked-up specification sections, along with justification(s) for any requested deviations to the specification requirements, with the submittal shall be sufficient cause for rejection of the entire submittal with no further consideration.

2. The CONTRACTOR shall submit the preventive maintenance information package as part of the shop drawing submittal package to the ENGINEER for review and approval. **SHOP DRAWING SUBMITTAL PACKAGE WILL NOT BE APPROVED WITHOUT ACCEPTANCE OF PREVENTIVE MAINTENANCE INFORMATION.**

PART 2 - PRODUCTS

2.1 MAGNETIC FLOW METERS

A. Acceptable Manufacturers (Manufacturers listed in alphabetical order):
   1. Endress+Hauser model Pro-Mag W400
   2. Krohne
   3. Toshiba LF654

B. Materials:
   1. All mounting hardware shall be 316 stainless steel, the instrument enclosure shall be rated NEMA 4X, the flow sensor liner shall be polyurethane lined, and the electrode material shall be 316 stainless steel.

C. Design and Fabrication:
   1. Utilize characterized field principle of electromagnetic induction to produce signal directly proportional to flow rate.
   2. Provide flanged end connections, per ANSI B16, rated for piping system operating and test conditions.
   3. Operating Pressure: 100 psi.
   4. Operating Temperature: 122° F.
   5. Grounding Requirements:
      a. Non-metallic or Lined Pipe:
         1) Inlet and outlet grounding rings of same material as electrode.
      b. Conductive Piping:
         1) Conductive path between the meter and the piping flanges.
   6. Provide cable between magnetic flow meter and transmitter.
   7. Pulsed DC magnetic field excitation.
   8. Automatic zero.

9. Adjustable low flow cutoff.
10. 16-character alphanumeric display shall indicate user-defined flow units and total flow. All menu advice and commands shall be viewed on this display.
11. Minimum signal lock (empty tube zero) to prevent false measurement when tube is empty.
12. Accuracy:
    a. ±0.5%of rate above 1 fps.
    b. ±0.01 fps below 1.0 fps.
    c. 4mA to 20 mA DC isolated output into maximum 800 ohms.
    d. Scaled frequency output, 24 VDC.
    e. Power supply: 117 V ±10%, 60 HZ.
    f. Meter operable as specified in liquids with 5.0 micro-ohm/cm or more conductivity.
13. Electrodes shall be self-cleaning.

2.2 MAGNETIC FLOW METERS FOR CHEMICAL SERVICE

A. Acceptable Manufacturers:
   1. Endress+Hauser model Pro-Mag 53H.

B. Design and Fabrication:
   1. The metering tube sensors shall be of the proper sizes to measure the design flow rate of the piping and shall be noted in the instrument schedule.
   2. Materials:
      a. Seals, Orings and Flange gaskets: Viton.
      b. Tube: Stainless steel with PFA liner.
      c. Electrodes: The two measuring electrodes and empty pipe electrode shall be constructed of a material compatible with the measured fluid.
      d. 40% Aluminum Chlorohydrate: PTFE or PFA
      e. 50% Citric Acid: Tantalum.
      f. 12.5% Sodium Hypochlorite: Platinum.
      g. 33% Hydrochloric Acid: PTFE, ETFE, or PFA
      h. 50% Sodium Hydroxide: Type C22 Ni-Alloy
      i. 38% Sodium Bisulfite: PTFE, ETFE, or PFA
      j. Grounding rings: Inlet and outlet, same as electrodes.
      k. Housing: Aluminum housing shall enclose the coil assemblies and internal wiring.
      l. Process connections: PVDF flanges, rated NEMA 4X.
      m. Transmitter housing: Powder coated cast aluminum with NEMA 4X rating.

C. Electrodes:
   1. Meters 5/16 inches diameter and larger shall have a third electrode of the same material to serve as an empty pipe detector.
   2. The electrode circuit shall have a minimum impedance of 1012 ohms to overcome moderate coating buildup.

D. Transmitter:
   1. The transmitter shall be a microprocessor controller mounted remotely.
   2. The flowmeter shall have a backlit LCD display used for programming as well as for simultaneous display of flow rate and total flow in user selectable engineering units, and readout of diagnostic error messages.
   3. All programming parameters shall be access-code protected
   4. The electronics shall include infinitely adjustable low flow cutoff.
   5. The power supply to the transmitter shall be 117 V ±10%, 60 Hz.
   6. Upon any power failure, the unit shall retain all setup parameters and accumulated measurements internally in non-volatile memory. All units shall be protected against voltage spikes from the power source with internal transient protection.
   7. The transmitter shall output a scaled 4 to 20 mA DC directly proportional to flow rate plus a scaled 24 VDC pulse or open collector frequency output. The analog output shall include an adjustable low flow cutoff.
   8. The transmitter shall have an algorithm which recognizes pulsating flows from chemical metering pumps and allows for precise measurement of these irregular flow rates.

E. Accessories:
   1. Grounding:
      a. Tantalum electrodes: Provide inlet and outlet grounding rings.
      b. Platinum electrodes: Provide grounding pins.
   2. Provide a stainless steel tag labeled with the instrument tag number.
   3. Provide a standard hand-held HART communicator with the current device drivers for every ten flow meters provided, with a minimum of two.

PART 3 - EXECUTION

3.1 INSTALLATION

A. Equipment and materials specified in this Section shall be installed and connected as specified, and as shown on the Drawings. The CONTRACTOR shall coordinate the installation with the other trades, to insure proper installation of the flow element, transmitter, and associated conduit and cables.

B. The CONTRACTOR shall calibrate the instruments to the proper ranges, as required by the OWNER and the ENGINEER. Where analog signals are connected to local, or remote monitoring equipment, the CONTRACTOR shall verify that the calibrated ranges and scaling of the local and remote indicators are correct.

3.2 ACCEPTANCE

A. Prior to Final Acceptance of the Work, the CONTRACTOR shall certify the equipment and installation included under this Section to be free of defects, and

suitable for trouble-free operation under the conditions set forth in these Specifications. This requirement is in addition to the manufacturer's guarantee.

3.3 SPARE PARTS

A. Provide the OWNER with a list of the manufacturers' recommended spare parts.

++ END OF SECTION ++

SECTION 17138

INSERTION MASS FLOW METERS

PART 1 - GENERAL

1.1 SCOPE OF WORK

A. This Section covers the insertion mass flow meters to be provided where indicated on the Drawings. The flow metering system shall include a low pressure loss flow conditioner.

B. Related Work specified elsewhere includes, but is not limited to Section 16000, General Electrical Requirements. Also, refer to requirements of Contract Documents for testing, adjusting, and balancing of systems.

1.2 QUALITY ASSURANCE

A. Equipment to be furnished under this Section shall be the product of firms regularly engaged in the design and manufacture of this type of equipment. Manufacturer shall assume responsibility for, and guarantee performance of equipment furnished. However, this shall not be construed as relieving the CONTRACTOR from responsibility for the proper installation and functioning of the Work.

1.3 SUBMITTALS

A. The following material shall be submitted to the ENGINEER prior to installation, in accordance with Section 16000, General Electrical Requirements, and as required elsewhere in the Contract Documents:
   1. Where applicable, provide complete manufacturer's part number, identifying scaling, operating range, housing and wetted parts materials, NEMA rating, product options, consumable materials, and other pertinent information.
   2. Prior to Final Acceptance of the Work, the CONTRACTOR shall provide Operations and Maintenance Manuals, in accordance with the Contract Documents.

PART 2 - PRODUCTS

2.1 INSERTION MASS FLOW METERS

A. Acceptable Manufacturers:
   1. FCI FlexMASter ST98 Series.
   2. FCI/VORTAB Flow Conditioner.

B. Materials:
   1. All mounting hardware shall be 316 stainless steel, and the instrument enclosure shall be rated NEMA 4X.

C. Design and fabrication:
   1. Operating Principle: Constant temperature thermal mass flow element, using two industrial grade Platinum RTD's, having 3-, 4-, or 5-wire device whose 4mA to 20mA output current is directly proportional to the flow rate.
   2. Velocity Range: 0 to18,000 SFPM.
   3. Velocity Measurement Accuracy: ±1% + 0.025%/° C Reading + (20SFPM + .25 SFPM/° C) above or below 25° C.
   4. Repeatability: 0.25%.
   5. Process Temperature Rating: -40° C to +200° C.
   6. Process Pressure Rating: 150 psig.
   7. Time Response (T/C): Velocity changes: 1 second; Temperature: 3 seconds.
   8. Sensitivity to Velocity Angle of Incidence: Less than 2% for yaw or pitch angles of up to ±20°.
   9. Pressure Drop: Less than 0.1-inch W.C.
   10. Sensor Material: Alloy C-276, all welded construction.
   11. Sensor Support Material: 316L Stainless Steel all-welded construction.
   12. Insertion Length: Per manufacturer's recommendations.
   13. Process Line Sizes: 2-1/2-inch pipe and larger.
   14. Sensor Electronics Enclosure: NEMA 4X, 7 painted aluminum, Class I, Div. 1, Groups B, C, D, enclosure only, dual chamber with CE compliance for EMI emissions and susceptibility.
   15. Sensor Enclosure Temperature Rating: -40° C to +60° C.
   16. Process Connection: 316 stainless steel compression fitting to fit 1-inch FNPT fitting on pipe (by customer).
   17. Field Wiring: One pair of twisted and shielded 14 to 18 gauge wire having a maximum loop resistance of 4 ohms.
   18. Safety approvals: Mass flow computer: Non-Incendive IEC 79-15, Ex nC II T4 (Cl. I, Div. 2, GPS.A, B, C, D, T4); CSA. Insertion mass flow element: Non-Incendive Class I, Div. 2, GPS.A, B, C, D, T5; FM, CSA. Explosion-Proof Class I, Div. I, GPS.B, C, D, T1; FM Explosion-Proof Class I, Div. I, GPS.A, B, C, D, T3; CSA Explosion-proof Eex d II CT3, CENELEC.

D. Direct Mount Microprocessor Based Electronics:
   1. Features: Easy to use menu for display and set-up with HELP screens, twenty-four hour clock/calendar; two optically isolated loop-powered 4mA to 20mA outputs for flow and temperature; multi-point calibration correction factors for flow and temperature; built-in totalizer and elapsed time; velocity/temperature mapping (VTM) for wide ranging velocity and temperature.

PART 3 - EXECUTION

3.1 INSTALLATION

A. Equipment and materials specified in this Section shall be installed and connected as specified, as shown on the Plans, and per manufacturer's recommendations. The CONTRACTOR shall coordinate the installation with the other trades, to insure proper installation of the flow element, transmitter, and associated conduit and cables.

B. The CONTRACTOR shall calibrate the instruments to the proper ranges, as required by the OWNER and the ENGINEER. Where analog signals are connected to local, or remote monitoring equipment, the CONTRACTOR shall verify that the calibrated ranges and scaling of the local and remote indicators are correct.

3.2 ACCEPTANCE

A. Prior to Final Acceptance of the Work, the CONTRACTOR shall certify the equipment and installation included under this Section to be free of defects, and suitable for trouble-free operation under the conditions set forth in these Specifications. This requirement is in addition to the manufacturer's guarantee.

3.3 SPARE PARTS

A. Provide the OWNER with a list of the manufacturers' recommended spare parts.

++ END OF SECTION ++

SECTION 17150

LIMIT AND POSITION SWITCHES

PART 1 - GENERAL

1.1 SUMMARY

A. Section Includes:
   1. Position and proximity switches used to monitor equipment status and to detect security intrusion.

B. Related Sections:
   1. Other Division 16 Sections.
   2. General Conditions for testing, adjusting, and balancing of systems.

1.2 SYSTEM DESCRIPTION

1.3 SUBMITTALS

A. In accordance with Section 16000, General Electrical Requirements, and elsewhere in the Contract Documents.

B. Product Data:
   1. Product information brochures, catalog cut sheets, other product literature containing manufacturer's Specifications, sizes, ratings, enclosure type and details, conditions-of-use, and fully developed part numbers.

C. Reference standards shall be the latest edition, including addenda, supplements, and revision. Applicable reference publications include the following:
   1. NEC.
   2. NEMA.

D. Quality Assurance/Control:
   1. Manufacturers' instructions for use.

E. Shop Drawings: Submit for approval the following:
   1. A copy of this specification section, with addendum updates included, and all referenced and applicable sections, with addendum updates included, with each paragraph check-marked to indicate specification compliance or marked to indicate requested deviations from specification requirements. Check marks (✓) shall denote full compliance with a paragraph as a whole. If deviations from the specifications are indicated, and therefore requested by the CONTRACTOR, each deviation shall be underlined and denoted by a number in the margin to the right of the identified paragraph, referenced to a detailed written explanation of the reasons for requesting the deviation. The

ENGINEER shall be the final authority for determining acceptability of requested deviations. The CONTRACTOR shall furnish equipment and/or services as specified if an exception and/or deviation is rejected. The remaining portions of the paragraph not underlined will signify compliance on the part of the CONTRACTOR with the specifications. Failure to include a copy of the marked-up specification sections, along with justification(s) for any requested deviations to the specification requirements, with the submittal shall be sufficient cause for rejection of the entire submittal with no further consideration.

2. The CONTRACTOR shall submit the preventive maintenance information package as part of the shop drawing submittal package to the ENGINEER for review and approval. **SHOP DRAWING SUBMITTAL PACKAGE WILL NOT BE APPROVED WITHOUT ACCEPTANCE OF PREVENTIVE MAINTENANCE INFORMATION.**

1.4 QUALITY ASSURANCE

A. Manufacturer must be regularly engaged in the design and manufacture of this type of equipment and shall assume responsibility for and guarantee performance of the equipment furnished. However, this shall not be construed as relieving the CONTRACTOR from responsibility for the proper installation and functioning of the equipment.

PART 2 - PRODUCTS

2.1 MANUFACTURER'S (LIMIT SWITCHES)

A. Cutler-Hammer / Eaton.

B. Square D.

C. General Electric.

D. Honeywell – Microswitch.

E. Allen-Bradley.

2.2 MANUFACTURER'S (INTRUSION SWITCHES)

A. General Electric Sentrol Series 181 Guardswitch.

B. General Electric High Security 2700 series.

2.3 GENERAL

A. Heavy duty, industrial grade units with NEMA rated housings compatible with installation location and environmental conditions. Enclosures to be NEMA 4X unless noted otherwise or provided as part of a packaged system.

B. Electrical contact sets configured as shown on drawings and rated for 5 amps at 250 volts minimum. Electrical connections maximum No. 12 AWG copper wire, and 1/2-inch conduit.

C. Sensing elements must have provisions for field mechanical adjustment.

2.4 LIMIT SWITCHES, GENERAL

A. Combination switch housing and position sensing lever coordinated with mechanical equipment whose position is to be sensed. Lever sensing arm to be rated for 10,000 mechanical operations.

2.5 LIMIT SWITCHES, PROXIMITY

A. Integrated capacitive or inductive proximity sensing unit and switch housing. Coordinate sensing distance with mechanical equipment whose position is being sensed. Provide with adjustable mounting bracket compatible with the switch housing and environmental conditions.

2.6 LIMIT SWITCHES, PHOTO-ELECTRIC

A. Combination switch housing with photo-electric sensor and separate photo-electric emitter or photo-electric reflective unit. Coordinate sensor style, beam intensity, and wavelength with mechanical equipment whose position is being sensed. Unit must operate reliably under all ambient light conditions. Power supply and contact ratings as shown on Drawings.

PART 3 - EXECUTION

3.1 INSTALLATION

A. Install and connect as specified and shown on the Drawings.

B. Adjust position sensing elements for reliable and repeatable operation.

C. Coordinate with Mechanical Engineer and other trades to insure proper connection to mechanical or other equipment.

3.2 ACCEPTANCE

A. Certify the equipment and installation included under this Section to be free of defects, and suitable for trouble-free operation under the conditions set forth in these Specifications. This requirement is in addition to the manufacturer's guarantee.

++ END OF SECTION ++

SECTION 17221

ELECTRONIC 4-20MA INDICATORS

PART 1 - GENERAL

1.1 SCOPE

A. This Section covers digital panel meters, and other types of 4mA to 20mA DC analog indicators indicated on the Drawings.

B. Related Work specified elsewhere includes, but is not limited to Section 16000, General Electrical Requirements. Also refer to requirements of General Conditions for testing, adjusting, and balancing of systems.

1.2 QUALITY ASSURANCE

A. Equipment to be furnished under this Section shall be the product of firms regularly engaged in the design and manufacture of this type of equipment. Manufacturer shall assume responsibility for, and guarantee performance of equipment furnished. However, this shall not be construed as relieving the CONTRACTOR from responsibility for the proper installation and functioning of the equipment.

B. Reference Standards: Standards shall be the latest edition, including addenda, supplements, and revision. Applicable reference publications include the following:
   1. NEC.
   2. NEMA.

1.3 SUBMITTALS

A. Submit product information cut sheets containing manufacturer's specifications, operations and maintenance data, instrument enclosure type, installation location, and process pressure range to be supplied. Indicate product part number in full.

B. Provide Submittals in accordance with Section 16000, General Electrical Requirements, and elsewhere in the Contract Documents.

C. Shop Drawings: Submit for approval the following:
   1. A copy of this specification section, with addendum updates included, and all referenced and applicable sections, with addendum updates included, with each paragraph check-marked to indicate specification compliance or marked to indicate requested deviations from specification requirements. Check marks (✓) shall denote full compliance with a paragraph as a whole. If deviations from the specifications are indicated, and therefore requested by

the CONTRACTOR, each deviation shall be underlined and denoted by a number in the margin to the right of the identified paragraph, referenced to a detailed written explanation of the reasons for requesting the deviation. The ENGINEER shall be the final authority for determining acceptability of requested deviations. The CONTRACTOR shall furnish equipment and/or services as specified if an exception and/or deviation is rejected. The remaining portions of the paragraph not underlined will signify compliance on the part of the CONTRACTOR with the specifications. Failure to include a copy of the marked-up specification sections, along with justification(s) for any requested deviations to the specification requirements, with the submittal shall be sufficient cause for rejection of the entire submittal with no further consideration.

2. The CONTRACTOR shall submit the preventive maintenance information package as part of the shop drawing submittal package to the ENGINEER for review and approval. **SHOP DRAWING SUBMITTAL PACKAGE WILL NOT BE APPROVED WITHOUT ACCEPTANCE OF PREVENTIVE MAINTENANCE INFORMATION.**
3. Submit complete Operation and Maintenance Manuals in conformance with the Operation and Maintenance Manuals section of Section 01300, Submittals.

PART 2 - PRODUCTS

2.1 ELECTRONIC 4-20mA INDICATORS

A. Digital indicators shall be designed for semi-flush mounting in a panel. The display shall be a 3-1/2 digit LCD type with digit height of not less than 0.35 inches. The display shall be easily read from a distance of 10 feet, in varying lighting environments. Operating temperature range shall be 0° C to 50° C.

B. The indicator shall have a differential type ungrounded input screw terminal connector. Accuracy shall be ±0.5%. The indicators shall include user selectable scale and offset factors, which allow operators to scale and offset displayed measurement for conversion to desired units of measurement. The display shall be scaled in engineering units with the units shown on the display face, or engraved on the associated nameplate. The display shall have a movable decimal point, and shall provide over-range indication.

C. Indicator shall be calibrated from the front panel, using zero and span potentiometers. Decimal place position shall be set from DIP switches. Indicators shall be Action Instruments, Red Lion, Newport, or equal, and shall be powered by 120VAC, or 24VDC, as shown on the Drawings.

PART 3 - EXECUTION

3.1 INSTALLATION

A. Equipment and materials specified in this Section shall be installed, connected, and tested in accordance with the manufacturers Specifications, and as indicated on the Drawings.

3.2 ACCEPTANCE

A. Prior to Final Acceptance, the CONTRACTOR shall certify the equipment and installation included under this Section to be free of defects, and suitable for trouble-free operation.

++ END OF SECTION ++

SECTION 17222

SIGNAL CONDITIONERS

PART 1 - GENERAL

1.1 SCOPE

A. This Section contains Specifications for analog (4mA to 20mA DC) signal conditions, used for loop isolation, protection, and switching. Refer to the Drawings and provide the devices as indicated.

B. Related Work specified elsewhere includes, but is not limited to Section 16000, General Electrical Requirements. Also refer to requirements of General Conditions for testing, adjusting, and balancing of systems.

1.2 QUALITY ASSURANCE

A. Equipment to be furnished under this Section shall be the product of firms regularly engaged in the design and manufacture of this type of equipment. Manufacturer shall assume responsibility for, and guarantee performance of equipment furnished. However, this shall not be construed as relieving the CONTRACTOR from responsibility for the proper installation and functioning of the Work.

1.3 SUBMITTALS

A. The following material shall be submitted to the ENGINEER prior to installation, in accordance with Section 16000, General Electrical Requirements, and as required elsewhere in the Contract Documents:
   1. Where applicable, provide complete manufacturer's part number, identifying scaling, operating range, housing and wetted parts materials, NEMA rating, product options, consumable materials, and other pertinent information.
   2. Prior to Final Acceptance of the Work, the CONTRACTOR shall provide Operations and Maintenance Manuals, in accordance with the Contract Documents.

B. Shop Drawings: Submit for approval the following:
   1. A copy of this specification section, with addendum updates included, and all referenced and applicable sections, with addendum updates included, with each paragraph check-marked to indicate specification compliance or marked to indicate requested deviations from specification requirements. Check marks (✓) shall denote full compliance with a paragraph as a whole. If deviations from the specifications are indicated, and therefore requested by the CONTRACTOR, each deviation shall be underlined and denoted by a number in the margin to the right of the identified paragraph, referenced to a

detailed written explanation of the reasons for requesting the deviation. The ENGINEER shall be the final authority for determining acceptability of requested deviations. The CONTRACTOR shall furnish equipment and/or services as specified if an exception and/or deviation is rejected. The remaining portions of the paragraph not underlined will signify compliance on the part of the CONTRACTOR with the specifications. Failure to include a copy of the marked-up specification sections, along with justification(s) for any requested deviations to the specification requirements, with the submittal shall be sufficient cause for rejection of the entire submittal with no further consideration.

2. The CONTRACTOR shall submit the preventive maintenance information package as part of the shop drawing submittal package to the ENGINEER for review and approval. **SHOP DRAWING SUBMITTAL PACKAGE WILL NOT BE APPROVED WITHOUT ACCEPTANCE OF PREVENTIVE MAINTENANCE INFORMATION.**
3. Submit complete Operation and Maintenance Manuals in conformance with the Operation and Maintenance Manuals section of Section 01300, Submittals.

1.4 MANUFACTURERS

A. Moore Industries.

B. Phoenix Contact.

C. Measurement Technologies Ltd.

D. Action Instruments, Inc.

E. Approved equal.

PART 2 - PRODUCTS

2.1 CURRENT-TO-CURRENT CONVERTER

A. Current-to-current converters shall provide electrical isolation between the input and output. Current-to-current converters shall be supplied where indicated on the Drawings, and wherever the circuit impedance exceeds the capability of a transmitter.

B. The converter shall receive a 4mA to 20mA DC analog current input signal and produce an identical 4mA to 20mA DC output signal into a 0 to 1,000 ohm load. Accuracy shall be ±0.1% of span. The converter shall be provided with an enclosure suitable for back of panel mounting.

C. Power requirements shall be 120VAC, or 24VDC, as indicated on the Drawings.

2.2 DUAL CHANNEL CURRENT ISOLATOR

A. Dual channel current isolators shall provide electrical isolation between the input and output. The instruments shall receive a 4mA to 20mA DC analog current input signal and produce two identical 4mA to 20mA DC output signals.

B. Each channel shall be fully isolated, and capable of driving a 0 to 650 ohm load. Accuracy shall be ±0.1% of span. The isolators shall be provided with an enclosure suitable for back of panel mounting.

C. Power requirements shall be 120VAC, or 24VDC, as indicated on the Drawings.

2.3 SET POINT RELAY

A. The set point relays shall be solid state devices, and shall provide dual output relay contact closures from a 4mA to 20mA DC input. Each relay shall be controlled by an adjustable set point from a 10-turn potentiometer.

B. The dual deadbands shall be adjustable from 0 to 100 percent. The output relay shall be DPDT with contacts rated 10 amps at 120 VAC. Accuracy and repeatability shall be within 0.1% of span.

C. The instruments shall be immune to humidity and line voltage regulation problems. Power requirements shall be 120VAC, or 24VDC. The unit shall be housed in a general purpose type housing suitable for subpanel mounting in a control panel enclosure.

PART 3 - EXECUTION

3.1 INSTALLATION

A. Equipment and materials specified in this Section shall be installed and connected as specified, and as shown on the Drawings.

3.2 ACCEPTANCE

A. Prior to Final Acceptance of the Work, the CONTRACTOR shall certify the equipment and installation included under this Section to be free of defects, and suitable for trouble-free operation under the conditions set forth in these Specifications.

3.3 WARRANTY

A. The equipment listed in this Section shall have a seven year warranty from the manufacturer.

++ END OF SECTION ++

SECTION 17325

TURBIDITY AND TSS ANALYZER

PART 1 - GENERAL

1.1 SECTION INCLUDES

A. Turbidity and suspended solids sensor for monitoring water and sludge concentrations and turbidity values.

1.2 MEASUREMENT PROCEDURES

A. The method of measuring turbidity and suspended solids will be with a dual-beam infrared/scattered light photometer. LED light source transmits light at 45 degrees to the sensor face.
   1. Nephelometric photoreceptors will detect scattered light at 90 degrees to the transmitted beam for turbidity.
   2. Back-scatter photoreceptors will detect scattered light at 140 degrees to the transmitted beam for suspended solids.

1.3 ALTERNATES

A. Other methods of turbidity and suspended solids measurement, such as four-beam or surface scatter methods, are not acceptable.

1.4 SYSTEM DESCRIPTION

A. Performance Requirements:
   1. Measurement range:
      a. Turbidity: 0.001 to 4000 NTU.
      b. Suspended solids: 0.001 mg/l to 50 g/L (ts-line or inline), or 0.001 mg/l to 500 g/L (hs line or highline).
   2. Accuracy:
      a. Turbidity: Less than 1% of reading or ±0.001 NTU, whichever is greater.
      b. Suspended solids: Less than 5% of reading (depends on homogeneity of municipal activated sludge).
   3. Repeatability:
      a. Turbidity: Less than 1% of reading.
      b. Suspended solids: Less than 3% of reading (depends on homogeneity of municipal activated sludge).
   4. Detection limit:
      a. Turbidity: 0.001 NTU.
      b. Suspended solids: 0.001 mg/L.
   5. Response time: Initial response 1 second.
   6. Signal Averaging Time: User selectable ranging from 1 to 300 seconds.

7. Units of measure:
    a. Turbidity: User Selectable NTU, FNU, EBC, FTU and TE/F.
    b. Suspended Solids: User Selectable g/L, mg/L, ppm, or % solids.

1.5 CERTIFICATIONS

A. Safety: Listed by ETL to UL 61010A-1: Certified by ETL to CSA C22.2 No. 1010.1.

B. EMC Emissions & Immunity: CE certified to EN 61326-1/A1, /A2 & EN 61010-1/A1, /A2.

1.6 ENVIRONMENTAL REQUIREMENTS

A. Operational Criteria:
    1. Sample flow velocity: 3 m/s (9.8 ft./s) maximum.
    2. Sample pressure: 6 bar (87 psi) maximum.
    3. Sample temperature: 0 to 40 degrees C.
    4. Operating temperature: 0 to 40 degrees C.

1.7 WARRANTY

A. The product includes a one-year warranty from the date of shipment.

1.8 MAINTENANCE SERVICE

A. Scheduled maintenance:
    1. Clean measurement windows: as experience dictates.
    2. Change wiper blades: from 3 to 6 months (depending on the application).
    3. Replace probe seals: every two years.

B. Unscheduled maintenance: Clean instrument enclosure.

C. Submit complete Operation and Maintenance Manuals in conformance with the Operation and Maintenance Manuals section of Section 01300, Submittals.

PART 2 - PRODUCTS

2.1 MANUFACTURER

A. Hach Company, Loveland, CO.
    1. Model SOLITAX ts-line SC Turbidity Sensor for immersion in open tanks.

2.2 MANUFACTURED UNIT

A. The SOLITAX Turbidity and Suspended Solids Sensor consists of a sensor contained in stainless steel or PVC, depending on model, with a silicon wiper blade and integral cable.

2.3 EQUIPMENT

A. The SOLITAX sensor is a digital sensor designed to connect to a universal controller (the sc100 or sc1000 controller, 120VAC rated).

B. The sensor provides sample color-independent measurement.

C. The sensor is equipped with a self-cleaning device to prevent erroneous values and maintenance problems caused by biological activity, scum build-up, and gas bubbles.

D. The signal average time for the sensor is user-selected from 1 to 300 seconds.

E. The sensor measures turbidity or turbidity and suspended solids (depending on the sensor).

F. The sensor must be serviceable.

G. The sensor is factory calibrated and needs no calibration prior to use. The sensor shall be capable of immersion in tank or insertion in pipe.

2.4 COMPONENTS

A. Standard equipment:
   1. Sensor with 33 ft. (10m) cable.
   2. Manual.

B. Dimensions:
   1. Models t-line sc, ts-line sc, and hs-line sc for immersion:
      a. Length: 7.87 inches (200 mm).
      b. Diameter: 2.36 inches high (60 mm).
   2. Models inline sc and highline sc for insertion:
      a. Length: 12.40 inches (315 mm).
      b. Diameter: 2.36 inches high (60 mm) C. Weight.
   3. Models inline sc and highline sc for insertion: 5.3 lb. (2.4 kg).
   4. Models t-line sc, ts-line sc, and hs-line sc for immersion:
      a. Stainless steel: 3.0 lb. (1.38 kg).
      b. PVC: 1.2 lb. (0.52 kg).

2.5 ACCESSORIES

A. Calibration kit.

B. Wiper blades.

C. Sun shield for controller.

D. Installation:
   1. Fixed point installation kit for immersion.
   2. Insertion mounting kit.
   3. Sensor adapters.
   4. Handrail mounting kit.

E. Extension cables.

PART 3 - EXECUTION

3.1 PREPARATION

A. Immersion sensors: Install the sensor with the optical window facing downstream in the direction of the flow to protect the sensor against the oncoming flow of large objects.

B. Insertion sensors:
   1. Pipe diameter: minimum 4 inches (100 mm) diameter in carbon or stainless steel.
   2. Install minimum 5 ft. (1.5 m) or three times the pipe diameter (whichever is greater) downstream of pumps, valves, or pipe elbows.

C. Locate the sensor 33 ft. (10 m) from the controller with the standard sensor cable. (Maximum distance between sensor and controller of 328 ft. (100 m) with optional extension cables.)

3.2 INSTALLATION

A. Contractor will install the analyzer in strict accordance with the manufacturer's instructions and recommendation.

B. Manufacturer's representative will include a half-day of start-up service by a factory-trained technician, if requested.
   1. Contractor will schedule a date and time for start-up.
   2. Contractor will require the following people to be present during the start-up procedure.
      a. General contractor.
      b. Electrical contractor.
      c. Hach Company factory trained representative.
      d. Owner's personnel.
      e. Engineer.

3.3 MANUFACTURER'S SERVICE AND START-UP

A. Contractor will include the manufacturer's services to perform start-up on instrument to include basic operational training and certification of performance of the instrument.

B. Contractor will include a manufacturer's Service Agreement that covers all the manufacturer's recommended preventative maintenance, regularly scheduled calibration and any necessary repairs beginning from the time of equipment startup through to end user acceptance / plant turnover and the first 12 months of end-user operation post turnover.

C. Items A and B are to be performed by manufacturer's factory-trained service personnel. Field service and factory repair by personnel not employed by the manufacturer is not allowed.

D. Use of manufacturer's service parts and reagents is required. Third-party parts and reagents are not approved for use.

++ END OF SECTION ++

SECTION 17420

PH/ORP SENSOR AND ANALYZER

PART 1 - GENERAL

1.1 SCOPE

A. This Section contains Specifications for pH Sensors and Analyzers. Refer to the Drawings and provide the devices as indicated.

B. Related Work specified elsewhere includes, but is not limited to Section 16000, General Electrical Requirements. Also refer to requirements of General Conditions for testing, adjusting and balancing of systems.

1.2 QUALITY ASSURANCE

A. Equipment to be furnished under this Section shall be the product of firms regularly engaged in the design and manufacture of this type of equipment. Manufacturer shall assume responsibility for, and guarantee performance of equipment furnished. However, this shall not be construed as relieving the CONTRACTOR from responsibility for the proper installation and functioning of the Work.

1.3 SUBMITTALS

A. The following material shall be submitted to the ENGINEER prior to installation, in accordance with Section 16000, General Electrical Requirements, and as required elsewhere in the Contract Documents:
   1. Where applicable, provide complete manufacturer's part number, identifying scaling, operating range, housing and wetted parts materials, NEMA rating, product options, consumable materials, and other pertinent information.
   2. Prior to Final Acceptance of the Work, the CONTRACTOR shall provide Operations and Maintenance Manuals, in accordance with the Contract Documents.

1.4 MANUFACTURERS

A. pH Analyzers shall be manufactured by GLI International, or equal.

B. pH Sensors shall be manufactured by GLI International, or equal.

PART 2 - PRODUCTS

2.1 pH ANALYZER

A. The analyzer shall be microprocessor-based and accept a GLI 5-wire Differential Technique sensor, a conventional combination electrode, or an electrode pair. It shall also accept an external temperature sensor (Pt 1000 or NTC 300 ohm thermistor for Differential sensor, or Pt 100 or Pt 1000 for conventional combination electrode).

B. The analyzer shall have predictive diagnostics to forecast the end of sensor life, and reactive diagnostics for alerting the operator to changes in vital electrode data including measuring and reference electrode impedance, zero, and slope.

C. The analyzer shall have an automatic logbook for recording up to 100 system events including calibrations, electrode performance statistics, warning and failure messages, power-up/power-down, relay overfeed timer "time outs", and configuration activity. Each event is logged with its date and time of occurrence.

D. The analyzer shall have a graphical dot matrix LCD display with 128 by 64 pixels and LED backlighting. The main display character height shall be 1/2-inch. Auxiliary information character height shall be 1/8-inch. Menu screens shall contain up to six full lines of conversational text.

E. The analyzer main display shall indicate pH. Simultaneously displayed auxiliary information shall include analog output values, process temperature, the date and time, the pH sensor's mV output, electrode impedance, relay status, diagnostic warnings, or error messages.

F. The pH analyzer shall have four pH calibration methods: a) Arbitrary: Enter known value of buffer for each point. b) Pre-defined (1- or 2-point): Automatic calibration and buffer recognition using buffers from one of the five built-in buffer sets. c) Sample (1 or 2-point): Enter known value of sample determined by laboratory analysis or comparison reading.

G. The analyzer shall have a user-assigned passcode to restrict access to configuration settings for authorized personnel only.

H. The analyzer shall have fail high, warn high, warn low, and fail low software alarm settings for the measured pH, temperature, electrode zero point, electrode slope, active (or glass) electrode impedance, and standard (or reference) electrode impedance. Also, fail high and warn high software alarm settings are provided for the calibration timer.

I. The analyzer shall have diagnostic screens for messages (including scrolling lists for fail and warn alarm conditions), calibration records, sensor statistics for the

first and last three calibrations, logbook, analyzer hardware tests, device description, and factory assistance.

J. The analyzer shall automatically retain calibration records, including the date and time of the last calibration, type of calibration performed, and important electrode statistics such as zero, slope, and electrode impedance.

K. The analyzer shall have self-check functions for all memory chips, the keypad, and display pixels.

L. The analyzer shall have two sets of isolated analog outputs. Each set shall consist of 0 to 1 mA/ 0 to 5 VDC and 4 mA to 20 mA. Each output set can be assigned to represent the measured pH, or temperature. Output 2 can provide the normal proportional output, or a special dedicated non-proportional alarm signal (selectable for 4 mA or 20 mA only). pH or temperature values can be entered to define the endpoints at which the minimum and maximum output values are desired.

M. The analyzer shall have an optional PID controller with a software selectable ISA or velocity algorithm. Also, the controller shall have an output timer alarm.

N. The analyzer shall have a user-set calibration timer to alert the operator to perform scheduled calibration.

O. The analyzer shall be powered by 120VAC, and shall be GLI International, Inc. Model P63.

2.2 pH SENSOR

A. The pH sensor shall be of "Differential Electrode Technique" design using two electrodes to compare the process value to a stable internal reference standard buffer solution. The standard electrode shall have non-flowing and fouling-resistant characteristics.

B. The sensor shall have a hex-shaped body to facilitate mounting, and shall be constructed of PEEK® material for exceptional chemical resistance and mechanical strength. This material shall enable the sensor to be installed in metal fittings without leakage usually caused by heating and cooling cycles when dissimilar materials are threaded together.

C. The sensor shall have a: a) Convertible body style featuring 1-inch NPT threads on both ends to mount into a standard 1-inch pipe tee, into a GLI adapter pipe for union mounting with a standard 1-1/2-inch tee, or onto the end of a pipe for immersion into a vessel, b) Insertion body style featuring 1-inch NPT threads only on the cable end to mount into a GLI ball valve hardware assembly, enabling the sensor to be inserted into or retracted from the process without stopping the process flow, c) Sanitary body style featuring an integral 2-inch flange to mount

into a GLI 2-inch sanitary tee. The sanitary body style sensor shall include a special cap and EDPM compound gasket for use with the GLI sanitary hardware.

D. The built-in electronics of the sensor shall be completely encapsulated for protection from moisture and humidity.

E. The sensor shall have a built-in preamplifier to enable the signal to be transmitted up to 3,000 ft. with standard cabling.

F. The sensor signal shall have an integral temperature sensor to automatically compensate measured values for changes in process temperature.

G. The sensor shall include a titanium ground electrode (standard) to eliminate ground loop currents in the measuring electrodes.

H. The sensor shall be GLI International, Inc. Model PDXP Series for pH measurement.

PART 3 - EXECUTION

3.1 INSTALLATION

A. Equipment and materials specified in this Section shall be installed and connected as specified, and as shown on the Drawings.

3.2 ACCEPTANCE

A. Prior to Final Acceptance of the Work, the CONTRACTOR shall certify the equipment and installation included under this Section to be free of defects, and suitable for trouble-free operation under the conditions set forth in these Specifications.

3.3 WARRANTY

A. The equipment listed in this Section shall have a one year warranty from the manufacturer.

++ END OF SECTION ++

SECTION 17421

CHLORINE RESIDUAL ANALYZER

PART 1 - GENERAL

1.1 DESCRIPTION

A. Scope:
   1. CONTRACTOR shall provide all labor, materials, equipment and incidentals as shown, specified and required to furnish, install, calibrate, test, adjust, commission and place into satisfactory operation all primary sensors and field instruments furnished under this Section.
   2. Contract Documents illustrate and specify functional and general construction requirements of the sensors and field instruments and do not necessarily show or specify all components, wiring, piping and accessories required to make a completely integrated system. CONTRACTOR shall provide all components, piping, wiring, accessories and labor required for a complete, workable and integrated system.
   3. CONTRACTOR shall be responsible for installing in-line flow elements (sensor housing and/or sensor well) and for providing taps in the process piping systems for installation of side stream sensor systems as indicated on the P&ID.

B. Coordination: Coordinate the installation of all items specified herein and required to ensure the complete and proper interfacing of all the components and systems.

C. Related Sections: CONTRACTOR shall coordinate the requirements of the Work in this Section along with the requirements of the Sections listed below which includes, but is not necessarily limited to, Work that is directly related to this Section.
   1. Section 17000, Instrumentation.

1.2 QUALITY ASSURANCE

A. Qualifications:
   1. CONTRACTOR performing the Work shall have a minimum five years experience performing similar work in similar industries. All CONTRACTOR'S personnel shall be trained and experienced in best current construction practices.

B. Regulatory Requirements:
   1. Perform all Work in accordance with all applicable national and local codes.

C. Acceptable Manufacturers:

1. Furnish primary sensors and field instruments by the named manufacturers.
2. The named manufacturers have been specified to establish the standard of quality and performance of the equipment to be supplied.
3. Obtain all sensors and field instruments of a given type from the same manufacturer.

D. Manufacturers' Responsibilities and Services:
   1. Design and manufacture the primary sensors and field instruments in accordance with the applicable general design requirements specified herein.
   2. Field supervision, inspection, start-up and on site training by an authorized representative of the equipment manufacturer. The manufacturer's representative shall be fully knowledgeable in the operation and maintenance of the equipment.

1.3 PRODUCT DELIVERY, STORAGE AND HANDLING

A. CONTRACTOR shall make all arrangements for transportation, delivery and storage of the equipment and materials in accordance with the requirements of the Contract Documents, requirements of the system Supplier, and requirements of equipment manufacturers.

B. All equipment shall be handled and stored in accordance with manufacturer's instructions and relevant organization standards. Equipment shall be protected from weather, moisture and other conditions that could cause damage. Items that require a controlled environment shall be stored in a climate controlled warehouse or facility, as directed by the manufacturer. System Supplier shall notify CONTRACTOR, in writing, with copies to OWNER and ENGINEER of the storage requirements and recommendations for the equipment prior to shipment.

C. Primary sensors and field instruments shall not be delivered to the site until all product information and Shop Drawings for the sensors and instruments have been approved by ENGINEER.

1.4 SUBMITTALS

A. Shop Drawings:
   1. General:
      a. Shop Drawing submittals are to be in accordance with the requirements of the Contract Documents.
      b. Manufacture of custom equipment shall not commence until related submittals have been approved by ENGINEER.
      c. Shop Drawings shall be submitted in complete packages grouped to permit review of related items as generally outlined in Paragraph A.3., below.
      d. Review of Shop Drawings will be for conformance with Contract Documents and with regard to functions specified in the Plans.
   2. Submittal Requirements:

a. Product information for all sensors/transducers and field and panel instruments. Include the following:
    1) Manufacturer's product name and complete model number.
    2) Instrument tag number from Contract Documents.
    3) Manufacturer's data sheets and catalog literature. Provide data sheets as shown in ISA-20-1981. For instruments not included in ISA-20, submit data sheets using a similar format.
    4) Description of construction features.
    5) Performance and operation data.
    6) Installation and mounting details, instructions and recommendations.
    7) Service requirements.
    8) Dimensions.
    9) List of recommended spare parts.

B. System Operation and Maintenance Manuals:
    1. Furnish standard Operation and Maintenance Manuals for the equipment, and the additional requirements below.
    2. The Operation and Maintenance Manuals shall include the following:
        a. Name, address and telephone number of the control system Supplier's local service representative.
        b. Complete list of supplied system hardware parts with full model numbers referred to system part designations, including spare parts and test equipment provided.
        c. Copy of all approved submittal information and system Shop Drawings as specified herein with corrections made to reflect actual system as tested and delivered to the site for installation. 11 x 17 black line reproductions shall be provided for all Shop Drawings larger than 11 by 17-inches.
        d. Manufacturer's original copies of hardware, software, installation, assembly and operations manuals for control system components and peripheral devices. Manuals shall include the following information:
            1) General descriptive information covering the basic features of the equipment.
            2) Physical description covering layout and installation requirements and all environmental constraints.
            3) Functional and operational descriptions covering the procedures for start up, shutdown, and calibration of control system equipment and explaining how the various control functions are performed.
            4) Hard copy of ALL adjustable parameters and final settings in table form.
            5) Principles of operation explaining the logic of operation; provide information covering operation to a component level.
            6) Maintenance procedures covering checkout, troubleshooting, and servicing; checkout procedures shall provide the means to verify the satisfactory operation of equipment. Troubleshooting procedures

shall serve as a guide in determining faulty components and servicing procedure shall cover requirements and recommended time schedule for calibration, cleaning, lubrication and other housekeeping and preventive maintenance procedures.

7) As-built wiring, schematic and logic diagrams.
8) Safety considerations relating to operation and maintenance procedures.

C. Record Drawings and Documentation:
   1. CONTRACTOR and Equipment Supplier shall revise all system Shop Drawings, submittals and software documentation to reflect as built conditions in accordance with the requirements of the Contract Documents and the supplemental requirements below.
   2. One copy of all revised Shop Drawings and documentation shall be submitted to the ENGINEER for review. Replace out dated drawings and documentation contained in the System Operation and Maintenance Manuals prior to FINAL O&M submittal. 11 x 17-inch black line sets shall be provided for all drawings larger than 11 by 17-inches. Specific instructions for outdated drawing removal and replacement shall be provided with the Record Drawing submittal.
   3. 11 x 17 black line prints of wiring diagrams applicable to each control panel shall be placed inside a clear plastic envelope and stored in a suitable print pocket or container inside each control panel.

D. Reports:
   1. Two copies of the following reports shall be submitted to ENGINEER and OWNER:
      a. Factory Test Report.
      b. Installation Inspection, Field Calibration, and Field Testing Reports.

1.5 CHEMICAL SERVICE

A. Chlorine primary elements are designated for chemical service with chlorine. All wetted components and appurtenances for that primary element shall be resistant to corrosion by that chlorine.

1.6 MATERIALS OF CONSTRUCTION FOR WETTABLE PARTS

A. Provide the following materials of construction for primary sensors and field instrument (wetted) parts that come in contact with the following list of process fluids:

PROCESS FLUID	ELASTOMER	METAL	PLASTIC	OTHER
Chlorine Gas or Liquid		Hastelloy C, Monel, or Tantalum		
Potable Water	NSF Approved	NSF Approved	NSF Approved	NSF Approved
Non Potable Water	Neoprene	Type 316 SS	Teflon	Ceramic
Sodium Hypochlorite		Hastelloy C Tantalum Titanium Platinum	Teflon PVC/CPVC Kynar	Ceramic

1.7 IDENTIFICATION TAGS

A. All sensors and field instruments shall have an identification tag conforming to the following requirements:
   1. Tag numbers for sensors and field instruments shall be as listed on the Drawings and Instrument Index.
   2. Refer to Specification 16195 – Electrical Identification, for Tag requirements.

PART 2 - PRODUCTS

2.1 RESIDUAL CHLORINE ANALYZER

A. General: Unit shall use amperometric analysis to analyze and indicate total chlorine residual in a sample piped to the unit.

B. Required Features:
   1. Type: Amperometric.
   2. Accuracy: ±Two percent of calibrated span.
   3. Sensitivity: 0.001 mg/L or 1/2 percent of full scale, whichever is greater.
   4. Repeatability: MAX 0.2% of measuring range.
   5. Stability: ± One percent of full scale for one month.
   6. Response Speed: 90 percent of change within 120 seconds after sample entry.
   7. Output Signal: Isolated 4 to 20 mA DC.
   8. Piping Connections: 1/2-inch female NPT sample line, 1-1/4-inch female NPT drain connection.
   9. Sample Temperature: 35°F to 110°F. Provide automatic compensation for sample temperature.
   10. Enclosure: ABS cabinet, NEMA 4X.
   11. Power: 120 VAC ± ten percent, 60 Hz, Single phase.
   12. Display: LCD, Two lines, five and nine digit, with Status indicators.
   13. Operator Keypad Menu:
       a. mg/L total residual.

b. Cell current in manoamps.
c. Sample temperature in degrees F or C.
d. High and low alarm setpoints.
e. Output signal in mA DC.
f. Two relay contacts shall be SPDT and shall have a current capacity of two amps at 120 VAC non-inductive load.
g. Access code status.

14. Accessories: Include sufficient, quantities for one year operation assuming monthly calibration. Include drain hose, pH test papers, and potassium iodide.

C. Product and Manufacturer: Provide one of the following:
1. Model Liquisys M CCM 253, as manufactured by Endress + Hauser.
2. No Equal.

2.2 CHLORINE ANALYZER/TRANSMITTER

A. Analyzer/transmitter shall measure residual chlorine in the range 0 to 1, 0 to 5 and 0 to 10 ppm. All chlorine readings shall be automatically compensated for temperature variations over the range 35°F to 110°F Selection of the high and low control and alarm points shall be by means of test switches and an internal simulator.

2.3 CHLORINE ANALYZER SENSOR

A. Combined available chlorine sensors shall be of the passive amperometric type with gold cathode and silver anode and shall have a minimum electrolyte reservoir of 25 ml. The sensor shall be provided with a replaceable screw-on-type cap over the gold cathode, which contains a chlorine permeable membrane so constructed that replacement caps will cause less than three percent change in readings. Sensor shall come complete with spare membrane caps and electrolyte. Cable shall be four conductor, heavy-duty type with reinforcing core wire, vinyl covering and mylar insulation. Cable shall be long enough to permit easy withdrawal and inspection of the sensor without disconnecting the cable. The sensor shall screw into the base end of the probe holder and this assembly shall contain all wiring. No exposed wiring shall be permitted outside of the Chlorine Assembly enclosure.

B. Product and Manufacturer: Provide one of the following:
1. Model CCS 141, as manufactured Endress + Hauser.
2. No Equal.

2.4 PH/ORP ELECTRODE

A. Electrodes for pH/ORP measurement n with integrated Pt 100 temperature sensor and water proof connection.

B. Sterilizable, dirt-repellent PTFE ring junction that prevents blocking, assuring long term stability and accuracy.

C. Solid "Polytex" electrolyte, enabling use under pressures up to 87 PSI without counter pressure.

D. Integrated electrolyte bridge provides better protection against electrode poisons.

E. Long reference cartridge for considerably extended service life.

F. Product and Manufacturer: Provide one of the following:
   1. Model OrbiSint W CPS XX, as manufactured by Endress + Hauser.
   2. No Equal.

2.5 CHLORINE ANALYZER ASSEMBLY

A. Chlorine Analyzer shall be housed in a 24" x 24" x 12" NENA 4 enclosure.

B. Analyzer shall be complete with 316L SS Stainless Steel ball valves for Sample Inlet, DPD Test and Sample Outlet.

C. Tubing inside enclosure shall be 316L SS Stainless Steel.

D. Chlorine Analyzer, Flow assembly, and sample tubing shall be firmly mounted an enclosure back panel manufactured by the enclosure manufacturer.

2.6 SPARE PARTS AND TEST EQUIPMENT

A. CONTRACTOR shall furnish and deliver the spare parts and test equipment as outlined below

B. Spare parts shall be packed in containers suitable for long term storage, bearing labels clearly designating the contents and the pieces of equipment for which they are intended.

C. The spare parts identified during the submittal process shall be supplied.

D. The test and calibration equipment identified during the submittal process shall be supplied.

E. All spare parts shall have been operated and tested in the factory as part of factory testing prior to shipment of the control system.

F. For process sensors and all other analog instruments, the supplier shall submit a separate quotation for a recommended list of spare parts and test equipment. Each item recommended shall be listed and priced separately. The spare parts quotation shall contain a statement that the prices quoted are firm for a period of one year from the installation date of the equipment, and that the supplier

understand that the OWNER reserves the right to purchase none, any, or all of the parts quoted. The supplier is required to show that a stock of spare parts and test equipment is obtainable within a two (2) business day period.

PART 3 - EXECUTION

3.1 INSTALLATION

A. CONTRACTOR shall require the integrator to furnish the services of qualified factory-trained servicemen to assist in the installation of the instrumentation and control system equipment.

B. Install each item in accordance with manufacturer's recommendations and in accordance with the Contract Documents. Transmitters and instruments that require access for periodic calibration or maintenance shall be mounted so they are accessible while standing on the floor.

C. All items shall be mounted and anchored using Type 316 stainless steel hardware, unless otherwise noted.

D. All field instruments shall be rigidly secured, as required, by the manufacturer and as shown on the Drawings. Mounting instruments on handrails will not be allowed.

E. Conform to all applicable provisions of the NEMA standards, NEC and local, state and federal codes when installing the equipment and interconnecting wiring.

3.2 START-UP, CALIBRATION, AND TESTING AND TRAINING

A. CONTRACTOR shall provide all labor, materials, equipment and incidentals as shown on the Drawings, specified and required to furnish and install all equipment and coordinate all activities required to perform start up, commissioning and field testing of the Process Control System. Field testing shall include an integrated system field test and operational availability demonstration.

B. CONTRACTOR shall retain the services of the Instrumentation Supplier and Computer Control System vendor to supervise and/or perform start up, commissioning and field testing of all system components. As part of these services, the Instrumentation Supplier shall include for the equipment items not manufactured by the Instrumentation Supplier, the services of an authorized manufacturer's representative to check the equipment installation and place the equipment in operation. The manufacturer's representative shall be thoroughly knowledgeable about the installation, operation and maintenance of the equipment.

C. CONTRACTOR shall submit to the ENGINEER a schedule with proposed start dates and test procedure guidelines for start-up, commissioning, and field testing at least four weeks in advance.

++ END OF SECTION ++

SECTION 17451

PROGRAMMABLE LOGIC CONTROLLER HARDWARE

PART 1 - GENERAL

1.1 SCOPE OF WORK

A. This Section covers the programmable logic controller (PLC) used for control and monitoring, as indicated on Drawings.

B. Provide software support and debugging time for a period of 30 days after start-up of the equipment under PLC control.

1.2 SUBMITTALS

A. Submittals shall include the following:
   1. Manufacturer's data on electrical characteristics, capabilities, and physical properties.
   2. Wiring diagrams showing connections to all devices; input and output (I/O), analog, and discrete. The wiring diagrams shall indicate the I/O address point to be used in the PLC programs.
   3. A tag database for each ladder logic element, timer, counter, and register.

B. PLC ladder logic program complete with I/O memory map and addressing, I/O module physical slot locations, and cross-referenced list of program elements such as contacts, coils, timers, and other devices. The PLC program shall be documented with symbol names for each program element or device, and comments shall clearly describe the logic for each rung of the ladder logic. This Submittal shall be provided for review prior to field start-up of the equipment under PLC control. The CONTRACTOR shall make corrections to the program logic as requested by the OWNER or the ENGINEER, and resubmit the document for review and approval.

1.3 MANUFACTURERS

A. The PLC shall be a Control Logix L7X series with latest firmware manufactured by Allen-Bradley/Rockwell Automation.

PART 2 - PRODUCTS

2.1 PROGRAMMABLE LOGIC CONTROLLER

A. PLCs shall be furnished with hardware and software necessary to monitor and control equipment as listed in the Specifications and shown on the Drawings. Each field input and output shown as an I/O point shall be connected as per

manufacturer's recommendations. Additionally, the CONTRACTOR shall provide the hardware, software, and installation necessary for connecting additional future equipment as indicated on the Drawings. The type of field input and output shall be defined as follows:

1. Analog inputs Isolated (4 to 20 mA DC) 1756-IF8I.
2. Analog outputs Isolated (4 to 20 mA DC) 1756-OF8I.
3. Discrete inputs (120 VAC). 1756-IA16 or 1756-IA32
4. Discrete outputs (24VDC) 1756-OB16D or 1756-OB32 in addition to interposing relays.
5. Non-Volatile Flash Memory Card: 1784-SD1.
6. Power Supply: 1769-PA75.

B. The logic control programs shall reside in the PLCs. The program shall consist of software relay and attendant logic control. Control loop and logic flow diagrams shown on the Drawings, or control descriptions listed herein, shall be fully implemented.

2.2 INPUT/OUTPUT MODULES

A. Analog inputs shall have a minimum of 24 bits resolution. Analog outputs shall have a minimum of 16 bits resolution. Analog input modules shall be configurable for 4 to 20 mA or 1 to 5 VDC signals. Analog output modules shall be selectable for 4 to 20 mA or 1 to 5 VDC signals. Provide external or user power as needed.

B. Indicator lights shall also be provided on each I/O point to indicate status of each signal. Each individual input or output point shall be optically isolated to protect the controller I/O circuitry from high voltage transients. External wiring shall terminate on removable terminal blocks to allow quick installation or extraction of 16 or 32 point I/O modules without disconnecting field wiring. Labels shall be provided on modules that indicate the I/O address of each termination.

C. The power supply shall provide power for the processor and I/O modules. The power supply shall have a hold-up time (the time the system is operational during a brief power loss), typically between 20 milliseconds and 3 seconds. Power requirement shall be 120 VAC or 24 VDC.

D. Provide a minimum of 25% spare I/O of each type connected to terminals for future expansion.

2.3 STORAGE AND DOWNLOADING OF PLC PROGRAMS

A. The PLC shall be programmable through an RS-232/USB port or Ethernet/IP connected to a personal computer through a standard cable. The PLC programming software shall be provided with the user's manuals, original diskettes, and licensing agreement for registration by the OWNER. Cables,

adapters, connectors, or other hardware required to connect to the PLC shall be provided to the OWNER.

B. The PLC programming software shall enable the user to write the PLC program on-line or off-line. The software shall include utilities to manage PLC program files, document and print the programs, configure the programming environment, monitor and force the PLC addresses while on-line, and configure the PLC memory and addressing structure.

PART 3 - EXECUTION

3.1 INSTALLATION

A. PLC shall be installed as indicated on the Drawings designed for the PLC enclosure and according to the manufacturer's instructions.

3.2 START-UP AND TESTING

A. Upon completion of the installation, start-up shall be performed by a factory trained Controls Engineer. Operating and maintenance instruction books shall be supplied upon delivery of the unit and procedures explained to operating personnel.

B. The PLC program and I/O shall be thoroughly tested. Each input and output signal shall be tested for correct indication and control function. The CONTRACTOR shall demonstrate operation of the PLC control logic with simulated inputs, before the entire system is started, and run in automatic mode.

C. Program changes made as a result of start-up testing and debugging shall be fully documented. Submit the latest program changes to the logic for review, and update the Operation and Maintenance Manuals with the latest program printout and diskette.

D. Proportional-Integral-Derivative (PID) loops shall be tested and tuned to provide a stable control over the process variable, with uniform internal analog range scaling.

3.3 TRAINING

A. Provide eight hours of training on the control system. Instruction shall include a description of the control system operation. Teach the operators how to make control system parameter changes (set points, timer values, etc.) and show them how to enter passwords to make these changes.

3.4 SPARES

A. Furnish a minimum of two spare I/O module of each type, and two power supply modules.

B. Furnish 10 fuses of each type and size used in the power supply and I/O modules.

++ END OF SECTION ++

SECTION 17452

PROGRAMMABLE LOGIC CONTROLLER SYSTEM

SOFTWARE AND ACCESSORIES

PART 1 - GENERAL

1.1 SCOPE

A. This Section includes furnishing all programmable logic controllers (PLCs) as indicated on the Drawings and specified herein.

B. Related Work specified elsewhere includes, but not limited to, Section 16000, General Electrical Requirements. Also refer to requirements of Contract Documents for testing, adjusting, and balancing of systems.

1.2 QUALITY ASSURANCE

A. Use programmable logic controller system manufacturer approved hardware, such as cable, mounting hardware, connectors, enclosures, racks, communication cable, splitters, terminators, and taps.

B. Programmable Logic Controller Installer Qualifications:
   1. Qualified by completion of the programmable logic controller manufacturer's training course.
   2. Experience of installing at least five installations equal to scope of Project.

C. Provide a single source responsibility for programmable logic controller system mounting, installation, and wiring.

D. Design and test the programmable logic controller system to operate in an industrial environment per NEMA Standard UCS 2-230 (Arc Test) and IEEE C37.90a CSWC.

E. The CONTRACTOR shall ensure sufficient time for programming on-site, interfacing with other process equipment, and testing.

1.3 SUBMITTALS

A. Shop Drawings and Product Data: Include description of components, methods of connecting components, and the following:
   1. Hard copy of the programmable logic controller application program with full I/O documentation and explanation of conventions.
   2. Three copies of the programmable logic controller application program on CD-ROMS.

3. System interconnection diagram drawing for PLCs, radios, antennas, Modbus Plus data highway, Ethernet data highway, and field instrumentation.
4. Panel and enclosure plans, sections, and details.
5. Access opening locations and required clearances for each panel and enclosure.
6. Mounting plates and details for input and output chassis.
7. Enclosure internal wiring and terminal blocks.
8. Tabular Input and Output (I/O) Listing, Including the Following Data:
    a. Each I/O point, chassis number, module number, module I/O point number, name of I/O device.
    b. Instrumentation tag number of the I/O device in the Contract Documents.
    c. Electrical characteristics of the I/O signal.
    d. PLC internal address of each I/O.
9. Hard copies and machine-readable copies of PLC programs and personal computer graphics, reports, and database configuration.

B. Operating and Maintenance Manuals: Include the following:
1. Programming procedures.
2. Operations manuals.
3. Maintenance and troubleshooting manuals.
4. Spare parts manuals.
5. Configuration manuals.
6. List of service personnel contacts, including 24 hour service hot lines.

1.4 PLC DIAGNOSTICS

A. Configure the PLC programs to monitor the diagnostic registers in the PLC. Publish the status of these registers to SCADA for alarm of a PLC diagnostic failure. The following diagnostic status words shall be monitored:
1. Module status and module failures.
2. Internal battery condition.
3. Power supply status.

1.5 PLC APPLICATION PROGRAMMING SOFTWARE

A. Refer to the Contract Documents and P&IDs for the process control descriptions and functional requirements to be implemented using the following application software packages.
1. Furnish and install complete packages of RSLOGIX 5000, version 20 or newer and RXLINX Version 3.8 or newer, using primarily Function Block Diagram (FBD).
2. PLC Programming:
    a. Submit two copies of the PLC programs for review, prior to installation. The programs shall be fully documented with unique symbol names for each program element (coils, contacts, inputs, outputs, etc.), and comments for every three rungs of logic. The rung comments shall clearly describe

the function of the logic so that another programmer can understand the logic and be able to debug and modify the programs at a later date.

b. Once the programs have been reviewed, comments and changes shall be incorporated into the programs and submitted for a final review. Upon final review of the programs, install the programs in the PLCs to test the control logic using simulated I/O.

c. Provide instruction, maintenance manuals, and diagrams for supplied programs, device drivers, and custom designed subprograms and device drivers developed for this Project. Provide all materials in one or more three-ring binders. Separate sections by laminated numbered or descriptive tabs, with a table of contents to aid the user in finding specific information. Three-ring binders shall have labels on the spine identifying the contents of each volume.

d. Submit a training schedule in accordance with these Specifications.

e. Submittals shall be complete, neat, and orderly.

f. Submit two CD-ROM copies of the PLC software programming in their final configuration. Also submit all original software registered in the OWNER'S name, and all original documentation that accompanies the original software diskettes.

g. All programming shall be coordinated with the OWNER, who will provide programming standards to be used.

h. OWNER and programmer will hold programming kick-off meeting to coordinate scope and requirements.

1.6 ON-SITE TRAINING

A. Arrange for instruction of the OWNER'S designated personnel. The instruction shall commence within 30 days of OWNER request. Training shall include a minimum of eight hours of OWNER training.

B. The OWNER reserves the right to split training periods to accommodate personnel schedules.

C. The training sessions shall be structured to provide the OWNER'S personnel with a maximum of hands-on experience.

D. Control System Overview Training Shall Consist of the Following Topics:
   1. Definition of control modes, such as HAND, AUTO, LOCAL, and REMOTE.
   2. Entering and changing setpoints.

E. Provide the OWNER with the ability to program the PLCs, add new network components and PLCs as needed for future expansion of the system.

1.7 START-UP SUPPORT

A. The CONTRACTOR shall have field service and programming personnel on-site to provide start-up and commissioning services for a period of at least five days. The start-up service shall be coordinated with the ENGINEER. The start-up service shall be required prior to starting the final acceptance test.

1.8 PROGRAMMING SUPPORT

A. The CONTRACTOR shall be available to provide programming services for a period of at least 15 days. The start of this service shall commence after successful completion of the final acceptance test. This service shall consist of:
   1. Furnishing additional programming that may be required.
   2. Assisting OWNER'S personnel with additional technical support and training.

1.9 FACTORY WITNESS TESTING

A. Hardware and software components of the PLC system shall be thoroughly tested and "burned in" at the factory by the CONTRACTOR. Inform the ENGINEER 10 working days prior to the testing of the equipment. The ENGINEER and OWNER shall witness these tests before shipment to the site. Provide copies of all test reports to the ENGINEER.

B. The CONTRACTOR shall be responsible for all transportation, meals, and accommodation expenses for the OWNER'S and ENGINEER'S representative witnessing the factory test.

1.10 ON-SITE TESTING

A. On-site testing of the PLC system shall be performed prior to the final acceptance test. Submit a testing schedule detailing the timing and extent of the proposed testing and the test procedures to be followed.

B. Prior to the final acceptance test, the ENGINEER will review the status of the PLC system and determine if the final acceptance test can be performed. All primary elements shall be calibrated and all I/O signals shall be fully functional prior to the start of the final acceptance test.

C. Perform the PLC system final acceptance test and confirm the operation of all control loops, primary elements, control functions and sequences, and monitoring functions required of the complete PLC system. The PLC shall be operated continuously throughout the test without software or hardware failure. In the event of a failure, the acceptance test shall be terminated, the hardware or software failure shall be corrected, and the acceptance test shall be restarted. The ENGINEER and the OWNER shall determine if it is necessary to restart the test at

the first day of the test. The final acceptance test shall run uninterrupted for seven calendar days.

1.11 GENERAL PROGRAMMING REQUIREMENTS

A. The software development and programming of the control functions described herein shall be completed by the date defined in the Contract Documents. PLC programs shall meet the performance requirements described herein, and the control needs of the OWNER.

B. The control descriptions provided herein do not provide every programming detail such as timers, function blocks, coils, contacts, or other relay ladder logic elements that are required to write and implement complete PLC programs. The control descriptions are intended to describe the overall functional capability of the particular process being described. Communication with the OWNER and the ENGINEER shall be necessary to convey the additional information needed to produce the working PLC programs.

C. Any discrepancies in these documents shall be brought to the attention of the ENGINEER, in writing. The ENGINEER will then issue further explanation. The decision of the ENGINEER will be final.

D. Control logic shall be programmed, furnished, and installed as specified. The CONTRACTOR shall be required to test and demonstrate to the satisfaction of the ENGINEER that the control logic functions as specified.

E. The PLC programs shall meet industry norms, and function in such a way as to maintain safe and reliable operation of the equipment they are designed to control. If the ENGINEER determines that the control logic and PLC programming fails to perform the functions described herein in a safe and reliable manner, the CONTRACTOR shall modify and correct the programs.

F. The PLC shall not be able to control any equipment item that is not in the Auto or Remote mode.

G. The PLCs shall be programmed to monitor each of their respective analog signal inputs for instrument failures. If the input signal falls below 4 milliamps due to a short circuit, or an open current loop, the PLC shall produce an alarm signal to SCADA.

H. All motorized equipment (i.e., wells and pumps) will have Accumulation Runtime Counters associated with them.

PART 2 - PRODUCTS

2.1 APPLICATION SOFTWARE, PROGRAMMING HARDWARE, AND TRAINING

A. Provide fully annotated software with Logic Flow Diagram, rung-by-rung description, register, and variable cross-referencing. Reference program to control descriptions by Logic Flow Diagram.

PART 3 - EXECUTION

3.1 INSTALLATION

A. Install the programmable logic controller system in accordance with the programmable logic controller manufacturer's instructions and recommendations, including grounding specifications.

3.2 DEMONSTRATION

A. Establish a mutually agreed upon time for demonstrations with the ENGINEER.

B. Deliver written notification of demonstrations to ENGINEER at least seven days before demonstrations. Include an agenda for the demonstration and testing procedures with notification.

C. Demonstrate functional operation of programmable logic controller system hardware and logic program at system assembly location prior to shipment.

D. Demonstrate full functional operation of programmable logic controller system hardware and logic program at the Project job site when fully integrated to the field I/Os.

++ END OF SECTION ++

SECTION 17454

OPERATIONS AND CONTROL DESCRIPTIONS

PART 1 - GENERAL

1.1 SUMMARY

A. Section Includes: Operation and control descriptions.

B. New SCADA programming and graphic screens shall follow the conventions of the existing SCADA application.

C. CONTRACTOR shall coordinate with the ENGINEER during SCADA programming of the process control descriptions. Any deviation from the following Specification shall be approved by the ENGINEER before programming. Any programming that is required and not specified herein shall be the responsibility of the CONTRACTOR. All additional SCADA programming logic shall be approved by the ENGINEER before programming.

D. The terms SCADA, CMS & SCADA are used interchangeably in this document.

E. See additional PLC & OIT software and programming requirements under specification 17461.

1.2 RELATED SECTIONS

A. Section 11217, Sample Pumps.

B. Section 11220, Inline Rapid Mixers.

C. Section 11285, Hydraulic Gates.

D. Section 11311, Submersible Pumps.

E. Section 11314, End Suction Centrifugal Pumps.

F. Section 11320, Self-Cleaning Strainers.

G. Section 11371, Positive Displacement Blowers.

H. Section 11372, Air Compressors.

I. Section 11500.1, Membrane Equipment System.

J. Section 17000, Instrumentation.

1.3 COMMON CONTROL FUNCTIONS

A. Alarms:
   1. Discrepancy Alarms: Each device capable of being controlled by SCADA in REMOTE mode shall have a discrepancy alarm, which shall be displayed at the SCADA workstations. The discrepancy alarms shall be derived as follows:
      a. Device is commanded to start, and the starter auxiliary contact or VFD does not echo the command after an operator-adjustable time delay.
      b. Device is commanded to stop, and the starter auxiliary contact or VFD does not echo the command after an operator-adjustable time delay.
      c. Device is commanded to open, and the open limit switch does not echo the opened condition after an operator-adjustable time delay. An initial setting of two times the normal full travel time shall be used.
      d. Device is commanded to close, and the closed limit switch does not echo the closed condition after an operator-adjustable time delay. An initial setting of two times the normal full travel time shall be used.
      e. For modulating valves or gates, the alarm shall activate if the valve position is not within 2 percent of scale of the set point position after an operator-adjustable time delay.
      f. The discrepancy alarms shall only be active if the LOCAL/REMOTE selector switch at the device is in REMOTE mode.
      g. Once a discrepancy alarm occurs, the SCADA shall terminate the command to the device. The command to the device cannot be reinitiated until the discrepancy alarm is acknowledged by the operator from the SCADA workstation.
   2. Alarms Based on Analog Measurements shall be derived by the SCADA workstation as follows:
      a. The SCADA workstation shall derive alarms by comparing the process measurement to an operator-adjustable set point.
   3. Within SCADA program logic, configure each alarm to eliminate nuisance alarms that would otherwise activate when equipment is not in operation. For example, a low flow alarm on a pump discharge shall not be activated if the pump is off.
   4. All alarms derived in the SCADA, whether from analog measurements, discrete inputs, or discrepancy alarms, shall have a proving timer to limit nuisance alarms. The SCADA shall start the timer when it first detects an alarm condition, and shall only activate the alarm after the timer has expired. If the alarm condition clears while the timer is running, the timer shall be reset, and the alarm shall not be activated.
   5. Flow Totalizers: Each liquid flow rate transmitted to the SCADA shall have a flow total calculated by the SCADA as follows:
   6. The current day's total flow shall be calculated by the SCADA and displayed at the SCADA workstation.
   7. These flow totals shall be calculated and displayed even if they are not shown on the P&IDs (Process and Instrumentation Drawings).

8. PID Control Algorithms:
9. Each PID control algorithm shall have a faceplate that shall be displayed at the SCADA workstation. The face plate shall have the following functions:
10. Display process variable.
11. Display set point.
12. Display output.
13. Allow for operator selection of automatic or manual control of output.
14. Under manual control of output allow the operator to enter the desired output value.
15. Allow for input of the three PID tuning parameters.
16. The PID algorithm shall include set point and output tracking to provide bumpless control when switching between control modes.
17. Data Validation:
18. The SCADA workstation graphic screens shall accept manually entered set point data only if it is within valid process range.
19. The SCADA workstation shall require low-low set point to be lower than a low set point, high-high set point higher than a high set point, etc.

1.4 SUBMITTALS.

A. Submit software and programming in accordance with Section 17000, Instrumentation.

1.5 RAW WATER PUMPS

A. Summary:
   1. Three submersible pumps (2 duty, 1 standby) with VFDs are located at the Raw Water Pump Station and pump raw water to the Membrane Filtration System (MFS). Raw water from the SRP Consolidated Canal is conveyed to the Raw Water Pump Station via the SRP Intake Structure. The submersible pumps operate based on a set flow. The set flow will be adjusted according to the operation status of the Membrane Filtration System downstream.
   2. The pump operation is controlled by a level signal generated by a radar level transmitter. Float switches will operate the pump station in case of failure of the radar level instrument.
   3. A turbidity analyzer installed at the Raw Water Pump Station wetwell will monitor the turbidity of the raw water. The City will have an option to bypass flows if the turbidity levels are higher than a pre-set level.
   4. The Raw Water Pump Station Actuated Inlet Slide Gate is open under normal operating conditions.

B. P&ID: See Sheets I-1.01 to I-1.02.

C. Components

1. Equipment:

Item Description	Item Tag
Raw Water Pump No. 1	*TBD*
Raw Water Pump No. 1 Variable Frequency Drive	*TBD*
Raw Water Pump No. 1 LCP	*TBD*
Raw Water Pump No. 2	*TBD*
Raw Water Pump No. 2 Variable Frequency Drive	*TBD*
Raw Water Pump No. 2 LCP	*TBD*
Raw Water Pump No. 3	*TBD*
Raw Water Pump No. 3 Variable Frequency Drive	*TBD*
Raw Water Pump No. 3 LCP	*TBD*
Raw Water Pump Station Inlet Slide Gate	*TBD*
Raw Water Pump Station Inlet Slide Gate Actuator	*TBD*

2. Instruments:

Item Description	Item Tag	Units	Action	Setpoint	Range
Raw Water Pump Station Magnetic Flow Meter	*TBD*	gpm	NA	NA	0 to 10,500
Raw Water Pump Station Wetwell Radar Level Transmitter	*TBD*	feet	NA	NA	0 - 20
Raw Water Pump Station Wetwell Level Float	*TBD*	feet	NA	NA	0 - 20
Raw Water Pump No. 1 Pressure Indicator/Transmitter	*TBD*	psi	NA	NA	0 - 50
Raw Water Pump No. 1 High Pressure Switch	*TBD*	psi	NA	NA	NA
Raw Water Pump No. 2 Pressure Indicator/Transmitter	*TBD*	psi	NA	NA	0 - 50
Raw Water Pump No. 2 High Pressure Switch	*TBD*	psi	NA	NA	NA
Raw Water Pump No. 3 Pressure Indicator/Transmitter	*TBD*	psi	NA	NA	0 - 50
Raw Water Pump No. 3 High Pressure Switch	*TBD*	psi	NA	NA	NA
Raw Water Pump Station Turbidity Analyzer	*TBD*	NTU	NA	NA	0 - 200
Raw Water Pump Station Flow Switch	*TBD*	gpm	NA	NA	NA

3. Safety Interlocks:
   All interlocks and permissive are hardwired unless otherwise noted.

a. The pumps will automatically lock-out on low water level alarm.
b. Alarm will sound on high water level.
c. The pump will automatically shut off on VFD failure alarm and will not start again until the alarm is manually reset at the MCC.
d. The pump will shut off on high temperature alarm and will not start again until the manual reset pushbutton is actuated.
e. The pump will shut off on leakage alarm and will not start again until the manual reset pushbutton is actuated.
f. The pumps will shut off on high discharge pressure alarm and will not start again until the manual reset pushbutton is actuated.

4. Control Modes:
   a. General:
      1) The raw water pumps shall have a HAND/OFF/AUTO (HOA) handswitch installed on the face of the VFD MCC section.
      2) The raw water pumps shall have a START, STOP, and RESET pushbuttons installed on the face of the VFD MCC section.
      3) The raw water pumps shall have manual speed control via a keypad mounted on the face of the VFD MCC section.
      4) The raw pumps have a VFD READY, VFD RUNNING, VFD FAULT, HIGH DISCHARGE PRESSURE, LEAKAGE ALARM, and
      5) TEMPERATURE HI lights installed on the face of the VFDs.
   b. Local Hand Mode:
      1) When the HAND/OFF/AUTO selector switch at the VFD panel is set to HAND, the operator will be able to perform the following functions at VFD MCC section:
         a) Start/stop pumps
         b) Adjust VFD speed
      2) The operator is responsible for verifying that the manual valves are open and in the correct configuration.
   c. Local Automatic Mode:
      1) N/A.
   d. Remote Hand Mode:
      1) When the HAND/OFF/AUTO selector switch is set to AUTO at the VFD MCC section, and the MANUAL/AUTOMATIC software selector at SCADA workstation is set to MANUAL, the operator can perform the following functions at the HMI:
         a) Start/stop the pumps using the START/STOP commands.
         b) Adjust pump speed.
   e. Remote Automatic Mode:
      1) When the HAND/OFF/AUTO selector switch is set to AUTO at the VFD MCC section, and the MANUAL/AUTOMATIC software selector at SCADA workstation is set to AUTO, the pumps will be automatically controlled by PLC-RWIF as follows:
         a) The raw water pumps will operate based on a setpoint flow rate pre-programmed in the PLC or as determined by the operator.

The setpoint flow rate will correspond with the flow demand of the Membrane Filtration System. When four membrane trains are in service, the default setpoint is 10MGD, when three membrane trains are in service the default setpoint is 7.5 MGD.

b) The operator will be limited to entering a range of 0-15 MGD.
c) PLC-RWIF will monitor the flow rate from the Raw Water Pump Station Flow Meter/Transmitter (FIT-XXX-XXX).
d) Upon initial startup, one pump is requested.
e) Pump speed steadily increased to reach flow setpoint.
f) If pump runs at 60 Hz for more than 2 minutes and actual flow is below setpoint, a second pump is requested.
g) A total of two (2) pumps can run simultaneously at the same speed to reach flow setpoint. Initial speed for both pumps shall be 45 Hz.
h) Online pumps will be reduced to one as flow drops below XX MGD (based on pump curve and pump efficiency).
i) The operator has the ability to set the order of Lead-Lag-Standby pumps through SCADA.
j) The pumps will be cycled on and off in the order assigned by the operator as described above. In the event that a pump is down or not available, the second pump in line will turn on.

D. SCADA Status:
   a. The following are displayed at SCADA for the three pumps:
      1) Raw Water Pump Station Wetwell Level
      2) Raw Water Pump Station Wetwell Low-Low Level
      3) Raw Water Pump Station Flow
      4) Raw Water Pump Station Flow Total
      5) Pump Stop/Start
      6) Pump Speed Command
      7) Pump Speed Indication
      8) Pump IN AUTO Status
      9) Pump Running Status
      10) VFD/Pump Fault Alarm
      11) Pump Discharge High Pressure Alarm

E. Failure Modes:
   a. Communication Loss:
      1) On loss of PLC-RWIF, a Fail alarm will be initiated at SCADA and Raw Water pumps shall be shutdown.
   b. Power Loss:
      1) Upon restoration of power, the raw water pumps will start with the operating mode selected prior to the power loss.

1.6 SELF-CLEANING STRAINERS

A. Summary:
   1. Raw water from the Raw Water Pump Station will be pumped to three self-cleaning strainers (2 duty, 1 standby). The flow will be distributed between the two duty self-cleaning strainers. Operators must manually verify and open/close a series of butterfly valves in order to determine which strainers will operate. Each self-cleaning strainer will be equipped with a backwash assist pump that will be used to ensure proper backwashing.
   2. The self-cleaning strainers will continuously screen the raw water. As raw water passes through the self-cleaning strainer, solid particles build up on the screen and increase differential pressure (headloss). A differential pressure indicator will determine, using a preset pressure value, when the self-cleaning strainer triggers a backwash cycle. The differential pressure indicator can be overridden by a pre-set timer (operator input) to initiate the backwash cycle. As the self-cleaning strainer backwashes, the self-cleaning strainer continues forward flow, screening the raw water. The backwashes do not interrupt forward flow to the Membrane Filtration System.
   3. Backwash waste is pumped via the backwash assist pump to a common drain pipe and conveyed by gravity to the AWRF sanitary sewer system.

B. P&ID: See Sheet I-1.03.

C. Components
   1. Equipment:

Item Description	Item Tag
Self-Cleaning Strainer No. 1	*TBD*
Self-Cleaning Strainer No. 1 Backwash Assist Pump	*TBD*
Self-Cleaning Strainer No. 1 Backwash Ball Valve	*TBD*
Self-Cleaning Strainer No. 1 Backwash Ball Valve Actuator	*TBD*
Self-Cleaning Strainer No. 2	*TBD*
Self-Cleaning Strainer No. 2 Backwash Assist Pump	*TBD*
Self-Cleaning Strainer No. 2 Backwash Ball Valve	*TBD*
Self-Cleaning Strainer No. 2 Backwash Ball Valve Actuator	*TBD*
Self-Cleaning Strainer No. 3	*TBD*
Self-Cleaning Strainer No. 3 Backwash Assist Pump	*TBD*
Self-Cleaning Strainer No. 3 Backwash Ball Valve	*TBD*
Self-Cleaning Strainer No. 3 Backwash Ball Valve Actuator	*TBD*

2. Instruments:

Item Description	Item Tag	Units	Action	Setpoint	Range
Self-Cleaning Strainer No. 1 Differential Pressure Indicator	*TBD*	psi	Initiate Backwash	NA	*TBD*
Self-Cleaning Strainer No. 1 Pressure Indicator No. 1	*TBD*	psi	NA	NA	0 - 50
Self-Cleaning Strainer No. 1 Pressure Indicator No. 2	*TBD*	psi	NA	NA	0 - 50
Self-Cleaning Strainer No. 1 Backwash Assist Pump Suction Pressure Indicator	*TBD*	psi	NA	NA	*TBD*
Self-Cleaning Strainer No. 1 Backwash Assist Pump Discharge Pressure Indicator	*TBD*	psi	NA	NA	*TBD*
Self-Cleaning Strainer No. 2 Differential Pressure Indicator	*TBD*	psi	Initiate Backwash	NA	*TBD*
Self-Cleaning Strainer No. 2 Pressure Indicator No. 1	*TBD*	psi	NA	NA	0 - 50
Self-Cleaning Strainer No. 2 Pressure Indicator No. 2	*TBD*	psi	NA	NA	0 - 50
Self-Cleaning Strainer No. 2 Backwash Assist Pump Suction Pressure Indicator	*TBD*	psi	NA	NA	*TBD*
Self-Cleaning Strainer No. 2 Backwash Assist Pump Discharge Pressure Indicator	*TBD*	psi	NA	NA	*TBD*
Self-Cleaning Strainer No. 3 Differential Pressure Indicator	*TBD*	psi	Initiate Backwash	NA	*TBD*
Self-Cleaning Strainer No. 3 Pressure Indicator No. 1	*TBD*	psi	NA	NA	0 - 50
Self-Cleaning Strainer No. 3 Pressure Indicator No. 2	*TBD*	psi	NA	NA	0 - 50
Self-Cleaning Strainer No. 3 Backwash Assist Pump Suction Pressure Indicator	*TBD*	psi	NA	NA	*TBD*
Self-Cleaning Strainer No. 3 Backwash Assist Pump Discharge Pressure Indicator	*TBD*	psi	NA	NA	*TBD*

D. Safety Interlocks:
   1. The self-cleaning strainer will automatically shut off on motor failure alarm and will not start again until the alarm is manually reset at the MCC.
   2. If the differential pressure indicator does not return to the backwash shutoff pressure setpoint after a preset timer has elapsed, and alarm will sound until the manual reset pushbutton is actuated.
   3. The backwash valve shall not operate independent of the self-cleaning strainer backwash motor or self-cleaning strainer backwash assist pump motor.

E. Control Modes:
   1. General:
      a. The self-cleaning strainers shall have a Local Control Panel (LCP) located in the MCC. The LCP shall have a HAND/OFF/AUTO (HOA) handswitch, START and STOP pushbuttons, and a FAIL light.
      b. The RESET pushbutton for clearing alarms will be located at the LCP, along with alarm and status indicating lights.
      c. The backwash assist pumps shall have Motor Control Panels located in the Self-Cleaning Strainers Facility.
      d. The backwash valves will possess local controls mounted on valve body.
      e. The operator is responsible for verifying that the manual valves are open and in the correct configuration.
   2. Local Hand Mode:
      a. When the HAND/OFF/AUTO selector switch at the LCP is set to HAND, and the backwash valve L-O-R selector is set to Local, operator will be able to perform the following functions locally:
         1) Start/stop self-cleaning strainer backwash motor
         2) Start/stop self-cleaning strainer backwash assist pump motor
         3) Open/close self-cleaning strainer backwash valve
   3. SCADA Hand Mode:
      a. When the HAND/OFF/AUTO selector switch is set to AUTO at the LCP, the backwash valve L-O-R selector is set to Remote, and the MANUAL/AUTOMATIC software selector at SCADA workstation is set to MANUAL, the operator can perform the following functions at the HMI:
         1) Start/stop self-cleaning strainer backwash motor
         2) Start/stop self-cleaning strainer backwash assist pump motor
         3) Open/close self-cleaning strainer backwash valve
   4. SCADA Automatic Mode:
      a. When the HAND/OFF/AUTO selector switch is set to AUTO at the LCP, the backwash valve L-O-R selector is set to Remote, and the MANUAL/AUTOMATIC software selector at SCADA workstation is set to AUTO, the self-cleaning strainers will be automatically controlled by PLC-RWIF as follows:
         1) Differential Pressure Control

a) The self-cleaning strainers will operate based on a setpoint pressure indication as determined by the operator.
b) The operator will be limited to entering a range of 0-XX psi.
c) PLC-RWIF will monitor the differential pressure from the Self-Cleaning Strainer Differential Pressure Indicators (PDI-XXX-XXX, PDI-XXX-XXX, PDI-XXX-XXX).
d) The self-cleaning strainer backwash motor shall energize, the self-cleaning strainer backwash assist pump motor shall energize, and the backwash drain valve shall open when the differential pressure indicator reaches the pressure setpoint.
e) The self-cleaning strainer backwash motor shall shut off, the self-cleaning strainer backwash assist pump motor shall shut off, and the backwash drain valve shall close when the differential pressure indicator reaches an operator entered setpoint to end the backwash cycle.

2) Timer Control
a) The self-cleaning strainers backwash cycle shall operate based on a timer setpoint between backwash cycles as determined by the operator.
b) When the timer elapses, the self-cleaning strainer backwash motor shall energize, the self-cleaning strainer backwash assist pump motor shall energize, and the backwash drain valve shall open.
c) When a preset backwash cycle duration elapses, the self-cleaning strainer backwash motor shall shut off, the self-cleaning strainer backwash assist pump motor shall shut off, and the backwash drain valve shall close.
d) The timer shall re-start for the next backwash cycle.

F. SCADA Status:
1. The following are displayed at SCADA for the three self-cleaning strainers:
a. Self-Cleaning Strainer Backwash Motor Drive Stop/Start
b. Self-Cleaning Strainer Backwash Motor Drive IN AUTO Status
c. Self-Cleaning Strainer Backwash Motor Drive Running Status
d. Self-Cleaning Strainer Backwash Motor Drive Fail Alarm
e. Self-Cleaning Strainer Backwash Assist Pump Motor Drive Stop/Start
f. Self-Cleaning Strainer Backwash Assist Pump Motor Drive IN AUTO Status
g. Self-Cleaning Strainer Backwash Assist Pump Motor Drive Running Status
h. Self-Cleaning Strainer Backwash Assist Pump Motor Drive Fail Alarm
i. Self-Cleaning Strainer Differential Pressure Indication
j. Self-Cleaning Strainer Backwash Valve Opened Status
k. Self-Cleaning Strainer Backwash Valve Closed Status
l. Self-Cleaning Strainer Backwash Valve IN AUTO Status

G. Failure Modes:
   1. Communication Loss:
      a. On loss of PLC-RWIF, a Fail alarm will be initiated at SCADA and Raw Water pumps shall be shutdown.
   2. Power Loss:
      a. Upon restoration of power, the self-cleaning strainers will start with the operating mode selected prior to the power loss.

1.7 MEMBRANE FILTRATION SYSTEM

A. Summary:
   1. Refer to Section 11500.1 and the Membrane Supplier's Approved Scope of Supply and associated Bill of Materials for complete scope of supply.
   2. References:
      a. P&IDs: I-1.04 to I-1.17
      b. Specification Sections:
         1) Section 11371 – Positive Displacement Blowers
         2) Section 11372 – Air Compressors
         3) Section 11314 – End Suction Centrifugal Pumps
         4) Section 11500.1 – Membrane Equipment System - Suez
         5) Section 11715 – Chemical Metering Pumps and Appurtenances
         6) See membrane procurement package.

B. Process Description Summary:
   1. The Membrane Filtration System (MFS) will be controlled by a vendor-supplied PLC located in the new electrical building for control and monitoring purposes. Minimal controls of the MFS will be required by the Plant SCADA, aside from the MFS Chemical Facilities discussed in Section 1.11.
      a. Water will be conveyed from the Self-Cleaning Strainers to the MFS inlet channel. Flow will be distributed into the four membrane trains through dedicated 24-inch feed headers, each with five 12-inch branches into the membrane tank.
      b. Permeate pumps pull vacuum through the ultrafiltration hollow fibers to separate permeate from the solids. The permeate is pumped to the Airport WRF Chlorine Contact Basin effluent channel.
      c. Each membrane train will have a level sensor to monitor the water level. As solids accumulate on the hollow fibers, the water level will increase, which will trigger a backpulse cycle. The three types of cleaning cycles and their trigger mechanisms are described below.
      d. During scheduled recovery clean cycles, the water order from SRP will need to be reduced.
   2. The details of the Chemical Facilities and their controls used during the cleaning cycles are included in Section 1.11 – MFS Chemical Facility.
   3. Sodium hypochlorite may be injected into the membrane Backpulse Tank, to keep the tank clean.

Components

4. Equipment:

Item Description	Item Tag
MFS Basin No. 1 Inlet Valve	*TBD*
MFS Basin No. 1 Drain Valve	*TBD*
MFS Basin No. 2 Inlet Valve	*TBD*
MFS Basin No. 2 Drain Valve	*TBD*
MFS Basin No. 3 Inlet Valve	*TBD*
MFS Basin No. 3 Drain Valve	*TBD*
MFS Basin No. 4 Inlet Valve	*TBD*
MFS Basin No. 4 Drain Valve	*TBD*
Air Compressor Local Control Panel	*TBD*
MFS Sodium Hypochlorite Injection Valve	*TBD*
MFS Citric Acid Injection Valve	*TBD*
MFS Sulfuric Acid Injection Valve	*TBD*
MFS Sodium Hydroxide Injection Valve	*TBD*
MFS Sodium Bisulfite Injection Valve	*TBD*

5. Instruments:

Item Description	Item Tag	Units	Action	Setpoint	Range
MFS Inlet Channel Level Transmitter (Pressure type)	*TBD*	feet	NA	NA	0 - 7
MFS Train No. 1 Level Sensor	*TBD*	feet	NA	NA	0 - 12.5
MFS Train No. 2 Level Sensor	*TBD*	feet	NA	NA	0 - 12.5
MFS Train No. 3 Level Sensor	*TBD*	feet	NA	NA	0 - 12.5
MFS Train No. 4 Level Sensor	*TBD*	feet	NA	NA	0 - 12.5
Combined Permeate Flow Meter	*TBD*	MGD	NA	NA	0 - 15
CIP Tank Level Sensor	*TBD*	feet	NA	NA	0 - 12.5
CIP Pumps Discharge Flow Meter	*TBD*	MGD	NA	NA	NA

C. Safety Interlocks:

1. Refer to the membrane Supplier's equipment system P&IDs.
2. All four membrane inlet valves cannot be closed at the same time. At least three valves shall be open during regular operation, and two valves shall be open during scheduled recovery cleans.
3. An interlock through SCADA shall be provided to START a Sodium Hypochlorite pump as specified in Section 1.11 – MFS Chemical Facility when the Backpulse Tank Sodium Hypochlorite Injection Valve is OPEN.

D. Control Modes:
   1. General:
      a. Refer to the MFS Supplier's operation and maintenance documents for details on manual and automatic operation.
      b. The programming of the membrane equipment control system will be performed by the membrane equipment system vendor.
      c. The Contractor shall program the plant PLC and SCADA systems to interface with the membrane equipment control system over Ethernet connections as shown on the membrane equipment system vendor P&IDs and project DRAWINGS. The plant PLC and SCADA systems shall be programmed to provide full monitoring control of the membrane equipment system
      d. The contractor shall coordinate with the MFS Supplier as necessary.
      e. The MFS Supplier screens shall be replicated in the plant control and SCADA systems by the Contractor.
      f. Data Exchange with Plant PLC and SCADA: Make available and receive in contiguous Vendor PCP data registers the following data to and from the Plant PLC and SCADA:
         1) Control Signals Hardwired to Membrane Equipment System PLC:
            a) Raw Water Pump Station wet well level signal.
            b) Commands.
         2) Output Data to the Plant PLC and SCADA:
            a) Status of select pieces of equipment in the MFS.
            b) Alarms.
            c) Process variable values and historical data to meet requirements specified herein.
            d) Chemical feed pumps START and STOP as required during automatic cleaning sequences.
            e) Raw Water Pump Station Wet Well level signals.
         3) Input Data from the Plant Control System:
            a) RE-START command on return of power following a power outage.
            b) Flow rate from Raw Water Pump Station Flow Meter.
            c) Signal from Raw Water Pump Station Flow Switch.
            d) Chemical feed equipment status.
   2. Off Mode:
      a. When the HAND/OFF/AUTO selector switch MFS Supplier OIT is set to OFF, the membrane system shall not operate.
      b. The Sodium Hypochlorite to Backpulse Tank Sodium Hypochlorite Valve shall CLOSE.
   3. Local Hand Mode:
      a. When the HAND/OFF/AUTO selector switch MFS Supplier OIT is set to HAND, refer to the membrane equipment system Supplier's operation and maintenance documents for details on manual operation.
      b. The Sodium Hypochlorite to Backpulse Tank Sodium Hypochlorite Valve shall OPEN and CLOSE through the LCP.

4. Local Automatic Mode:
    a. N/A.
5. Remote Hand Mode:
    a. When the HAND/OFF/AUTO selector switch is set to AUTO at the MFS Supplier OIT, and the MANUAL/AUTOMATIC software selector at SCADA workstation is set to MANUAL, refer to the MFS Supplier's operation and maintenance documents for details on automatic operation.
    b. The Sodium Hypochlorite to Backpulse Tank Sodium Hypochlorite Valve shall OPEN and CLOSE through SCADA.
6. Remote Automatic Mode:
    a. When the HAND/OFF/AUTO selector switch is set to AUTO at the MFS Supplier OIT, and the MANUAL/AUTOMATIC software selector at SCADA workstation is set to AUTO, refer to the membrane equipment system Supplier's operation and maintenance documents for details on automatic operation.
    b. The Sodium Hypochlorite to Backpulse Tank Sodium Hypochlorite Valve shall OPEN and CLOSE through SCADA.

E. Failure Modes:
1. Communication Loss:
    a. Refer to the membrane equipment system Supplier's operation and maintenance documents for details on communication failure.
    b. The Sodium Hypochlorite to Backpulse Tank Sodium Hypochlorite Valve shall CLOSE.
2. Power Loss:
    a. Refer to the membrane equipment system Supplier's operation and maintenance documents for details on power failure response.
    b. The Sodium Hypochlorite to Backpulse Tank Sodium Hypochlorite Valve shall return to normal operation.

1.8 DISINFECTION

A. Summary:
1. The Membrane Filtration System permeate water will be dosed with sodium hypochlorite and mixed with an in-line mechanical mixer to ensure homogeneous distribution of chlorine.
2. The details for dosing of sodium hypochlorite and their controls used during the cleaning cycles are included in Sections 1.11 – Disinfection

B. P&ID: See Sheet I-1.17 and Sheets I-2.08 to I-2.09.

C. Components:
   1. Equipment:

Item Description	Item Tag
In-line Mechanical Mixer	*TBD*

D. Safety Interlocks:
   All interlocks and permissives are hardwired unless otherwise noted.
   a. The in-line mechanical mixer shall be interlocked to generate an alarm and shutdown if any instrument's alarms or signals are activated:
      1) In-line Mechanical Mixer Motor High Temperature Switch
      2) In-line Mechanical Mixer Temperature Oil Indication
      3) In-line Mechanical Mixer Low Oil Switch

E. Control Modes:
   a. The in-line mechanical mixer shall START only if all of the following permissive is met:
      1) In-line mechanical mixer EMERGENCY STOP is not active.
      2) None of the in-line mechanical mixer FAIL alarms are active.
      3) In-line mechanical mixer control mode is AUTO.
   b. The in-line mechanical mixer shall have a HAND/OFF/AUTO (HOA) switch installed on the MCC.
   c. START and STOP pushbuttons shall be located on the MCC.
   d. EMERGENCY STOP pushbuttons shall be located by the mixer. EMERGENCY STOP will STOP the in-line mechanical mixer in all control modes.
   2. Off Mode (HOA in OFF):
      a. The in-line mechanical mixer shall not be allowed to operate.
   3. Hand Mode (HOA in HAND):
      a. The in-line mechanical mixer shall be controlled from the MCC section.
      b. START and STOP pushbuttons, and indicating lights for the in-line mechanical mixer shall be located at the MCC section.
   4. SCADA Hand (HOA in AUTO, SCADA in HAND):
      a. START and STOP sequence shall be initiated by a command from the SCADA system.
   5. SCADA Automatic Mode (HOA in AUTO, SCADA IN AUTO):
      a. When the HAND/OFF/AUTO selector switch is set to AUTO at the MCC section, and the MANUAL/AUTOMATIC software selector at SCADA workstation is set to AUTO, the in-line mechanical mixer will be automatically controlled by PLC-RWIF as follows:
         1) The in-line mechanical mixer will operate based on a setpoint flow rate as determined by the operator.
         2) The operator will be limited to entering a range of 0-XX MGD.

3) PLC-RWIF will monitor the flow rate from the Membrane Filtration System permeate header flow meter (TAG NUMBER HERE).
4) The valve at the sodium hypochlorite dosage point shall open.
5) The duty Sodium Hypochlorite Metering Pump No. 5 or No. 6 shall energize and deliver to desired flow of chemical to the dosage point.
6) The in-line mechanical mixer shall energize and begin mixing the permeate and sodium hypochlorite solution.

F. Failure Modes:
1. Communication Loss:
1) The in-line mechanical mixer will STOP and initiate a FAIL alarm at the PLC.
2. Power Loss:
a. Upon restoration of power, the in-line mechanical mixer will start with the operating mode selected prior to the power loss.

1.9 RWIF BLOWER BUILDING - POSITIVE DISPLACEMENT BLOWERS

A. Summary:
1. Each of the four Membrane Filtration System trains is provided with process air for air scouring of the membrane modules by two positive displacement blowers, one (1) duty and one (1) standby.

B. P&ID: See Sheet I-1.19.

C. Components:
1. Equipment:

Item Description	Item Tag
Membrane Filtration System Blower No. 1	*TBD*
Membrane Filtration System Blower No. 1 Local Control Panel	*TBD*
Membrane Filtration System Blower No. 2	*TBD*
Membrane Filtration System Blower No. 2 Local Control Panel	*TBD*

2. Instruments:

Item Description	Item Tag	Units	Action	Setpoint	Range
Thermal Mass Flow Meter	*TBD*	scfm	NA	NA	0 to 3000
Flow Switch	*TBD*	scfm	NA	NA	NA
Pressure Indicator/Transmitter	*TBD*	psi	NA	NA	0 to 15

3. Safety Interlocks:
   All interlocks and permissives are hardwired unless otherwise noted.
   a. The Membrane Filtration System blowers shall be interlocked to generate an alarm and shutdown if any instrument's alarms or signals are activated:
      1) Membrane Filtration System Blower No. 1 Enclosure High Temperature Switch (TSH-010)
      2) Membrane Filtration System Blower No. 2 Enclosure High Temperature Switch (TSH-020)
      3) Membrane Filtration System Blower No. 1 Temperature Oil Indication (TIT-012)
      4) Membrane Filtration System Blower No. 2 Temperature Oil Indication (TIT-022)
      5) Membrane Filtration System Blower No. 1 Low Oil Switch (LSL-610-141)
      6) Membrane Filtration System Blower No. 2 Low Oil Switch (LSL-610-151)
      7) Membrane Filtration System Blower No. 1 Discharge Air Temperature (TIT-016)
      8) Membrane Filtration System Blower No. 2 Discharge Air Temperature (TIT-026)
      9) Membrane Filtration System Blower No. 1 Discharge High Pressure Switch (PSH-014)
      10) Membrane Filtration System Blower No. 2 Discharge High Pressure Switch (PSH-024)
      11) Membrane Filtration System Blower No. 1 High Inlet Filter Differential Pressure (PDS-011)
      12) Membrane Filtration System Blower No. 2 High Inlet Filter Differential Pressure (PDS-021)

4. Control Modes:
   a. The Membrane Filtration System blowers shall START only if all of the following permissive is met:
      1) The level in the selected Membrane Filtration System must be above an operator adjustable minimum level.
      2) Blower EMERGENCY STOP is not active.
      3) None of the blower FAIL alarms are active.
      4) 4) Blower control mode is AUTO.
   b. Each blower shall have a HAND/OFF/AUTO (HOA) switch installed on the LCP.
   c. START and STOP pushbuttons shall be located on the LCP.
   d. EMERGENCY STOP pushbuttons shall be located on the LCP. EMERGENCY STOP will STOP the blower in all control modes.
   e. SPEED controllers shall be located on the VFD at the MCC.
5. Off Mode (HOA in OFF):

a. The Membrane Filtration System blowers shall not be allowed to operate.

6. Hand Mode (LCP HOA in HAND):
   a. The blower shall be controlled from the LCP only.
   b. START and STOP of the blowers shall be by pushbuttons located at the LCP.
   c. The blower SPEED shall be manually controlled using the adjust dial at the VFD.
7. SCADA Hand Mode (HOA in AUTO, SCADA in HAND):
   a. START and STOP sequence shall be initiated by a command from the SCADA system.
   b. The blower SPEED shall be monitored by the operator from the SCADA system.
   c. The operator can select LEAD and STANDBY status to select the order of blower operation.
8. SCADA Automatic Mode (HOA in AUTO, SCADA IN AUTO):
   a. Refer to the Membrane System Supplier's operation and maintenance documents for details on automatic operation.
9. Failure Modes:
   a. Communication Loss:
      1) Refer to the Membrane System Supplier's operation and maintenance documents for details on communication failure response.
   b. Power Loss:
      1) Refer to the Membrane System Supplier's operation and maintenance documents for details on power failure response.

1.10 RWIF BLOWER BUILDING AIR COMPRESSORS

A. Summary:
   1. The pneumatically actuated valves in the MFS Facility will be supplied compressed air by two air compressors, one (1) duty and one (1) standby, and two air dryers, one (1) duty and one (1) standby.

B. P&ID: See Sheet I-1.20.

C. Components:
   1. Equipment:

Item Description	Item Tag
Membrane Filtration System Air Compressor No. 1	*TBD*
Membrane Filtration System Air Dryer No. 1	*TBD*
Membrane Filtration System Air Compressor No. 2	*TBD*
Membrane Filtration System Air Dryer No. 2	*TBD*
Coalescing Filter	*TBD*
Compressed Air Pressure Regulator	*TBD*

2. Instruments:

Item Description	Item Tag	Units	Action	Setpoint	Range
Air Compressor Pressure Switch No. 1	*TBD*	psi	NA	NA	0 - 350
Air Compressor Pressure Switch No. 2	*TBD*	psi	NA	NA	0 - 350
Air Compressor Pressure Gauge	*TBD*	psi	NA	NA	0 - 350

3. Safety Interlocks:
   All interlocks and permissives are hardwired unless otherwise noted.
   a. Discharge pressure high signal from the pressure switches shall STOP the air compressors.
4. Control Modes:
   a. The Membrane Filtration System air compressors shall START only if all of the following permissive is met:
      1) Air compressor EMERGENCY STOP is not active.
      2) None of the air compressor FAIL alarms are active.
      3) Air compressor control mode is AUTO.
   b. Each air compressor shall have a HAND/OFF/AUTO (HOA) switch installed on the MCC.
   c. START and STOP pushbuttons shall be located on the MCC.
   d. EMERGENCY STOP pushbuttons shall be located at the air compressor. EMERGENCY STOP will STOP the air compressor in all control modes.
5. Off Mode (HOA in OFF):
   a. The Membrane Filtration System air compressors shall not be allowed to operate.
6. Failure Modes:
   a. Communication Loss:
      1) Refer to the Membrane System Supplier's operation and maintenance documents for details on communication failure response.
   b. Power Loss:
      1) Refer to the Membrane System Supplier's operation and maintenance documents for details on power failure response.

1.11 MFS CHEMICAL FACILITY

A. Summary:
   1. Several chemicals are required during Maintenance and Recovery Cleaning cycles of the Membrane Filtration System (MFS): sodium hypochlorite, citric acid, Sulfuric Acid, sodium bisulfite, and Sodium Hydroxide. All chemicals needed for the MFS will be stored at the MFS Chemical Facility.

B. P&ID: See Sheets I-2.01 to I-2.06.

C. Components:
1. Sodium Hypochlorite
a. Equipment:

Item Description	Item Tag
Sodium Hypochlorite Storage Tank Discharge Valve	*TBD*
Sodium Hypochlorite Metering Pump No. 1	*TBD*
Sodium Hypochlorite Metering Pump No. 1 Local Control Panel	*TBD*
Sodium Hypochlorite Metering Pump No. 2	*TBD*
Sodium Hypochlorite Metering Pump No. 2 Local Control Panel	*TBD*

b. Instruments:

Item Description	Item Tag	Units	Action	Setpoint	Range
Sodium Hypochlorite Storage Tank Level Element	*TBD*	feet	NA	NA	0 - 10
Sodium Hypochlorite Storage Area Containment Sump Level Element	*TBD*	feet	NA	NA	0 - 3
Sodium Hypochlorite Metering Pump No. 1 Pressure Indicator/Transmitter	*TBD*	psi	NA	NA	0 - 50
Sodium Hypochlorite Metering Pump No. 2 Pressure Indicator/Transmitter	*TBD*	psi	NA	NA	0 - 50
Sodium Hypochlorite Flow Meter	*TBD*	gpm	NA	NA	0 - 15

2. Citric Acid
a. Equipment:

Item Description	Item Tag
Citric Acid Metering Pump No. 1	*TBD*
Citric Acid Metering Pump No. 1 Local Control Panel	*TBD*
Citric Acid Metering Pump No. 2	*TBD*
Citric Acid Metering Pump No. 2 Local Control Panel	*TBD*

b. Instruments:

Item Description	Item Tag	Units	Action	Setpoint	Range
Citric Acid Storage Tote Weight Scale	*TBD*	pounds	NA	NA	0 – 5,000
Citric Acid Storage Area Containment Sump Level Element	*TBD*	feet	NA	NA	0 - 2
Citric Acid Metering Pump No. 1 Pressure Indicator/Transmitter	*TBD*	psi	NA	NA	0 - 50
Citric Acid Metering Pump No. 2 Pressure Indicator/Transmitter	*TBD*	psi	NA	NA	0 - 50
Citric Acid Flow Meter	*TBD*	gpm	NA	NA	0 - 15

3. Sulfuric Acid
   a. Equipment:

Item Description	Item Tag
Sulfuric Acid Metering Pump	*TBD*
Sulfuric Acid Metering Pump Local Control Panel	*TBD*

b. Instruments:

Item Description	Item Tag	Units	Action	Setpoint	Range
Sulfuric Acid Storage Tote Weigh Scale	*TBD*	pounds	NA	NA	0 – 5,000
Sulfuric Acid Storage Area Containment Sump Level Element	*TBD*	feet	NA	NA	0 - 2
Sulfuric Acid Metering Pump Pressure Indicator/Transmitter	*TBD*	psi	NA	NA	0 - 10
Sulfuric Acid Flow Meter	*TBD*	gpm	NA	NA	0 - 2

4. Sodium Bisulfite
   a. Equipment:

Item Description	Item Tag
Sodium Bisulfite Metering Pump	*TBD*
Sodium Bisulfite Metering Pump Local Control Panel	*TBD*

   b. Instruments:

Item Description	Item Tag	Units	Action	Setpoint	Range
Sodium Bisulfite Storage Tote Weigh Scale	*TBD*	pound	NA	NA	0 – 5,000
Sodium Bisulfite Storage Area Containment Sump Level Element	*TBD*	feet	NA	NA	0 - 2
Sodium Bisulfite Metering Pump Pressure Indicator/Transmitter	*TBD*	psi	NA	NA	0 - 40
Sodium Bisulfite Flow Meter	*TBD*	psi	NA	NA	0 - 3

5. Sodium Hydroxide
   a. Equipment:

Item Description	Item Tag
Sodium Hydroxide Metering Pump	*TBD*
Sodium Hydroxide Metering Pump Local Control Panel	*TBD*

   b. Instruments:

Item Description	Item Tag	Units	Action	Setpoint	Range
Sodium Hydroxide Storage Tote Weigh Scale	*TBD*	pounds	NA	NA	0 – 5,000
Sodium Hydroxide Storage Area Containment Sump Level Element	*TBD*	feet	NA	NA	0 - 2
Sodium Hydroxide Metering Pump Pressure Indicator/Transmitter	*TBD*	psi	NA	NA	0 - 75
Sodium Hydroxide Flow Meter	*TBD*	gpm	NA	NA	0 - 5

D. Process Description:
   1. Sodium Hypochlorite

a. 12.5 percent solution of sodium hypochlorite is used for routine maintenance and recovery cleanings of the Membrane Filtration System (MFS) trains.
b. The sodium hypochlorite system consists of a bulk sodium hypochlorite storage tank, two chemical metering pumps, one flowmeter, and associated valves and piping.
c. Sodium hypochlorite pumps:
    1) The Membrane System Control PLC will call for a flow rate of sodium hypochlorite required for a cleaning procedure. Refer to the Membrane System Supplier documents for details. When called, the SCADA will START the duty sodium hypochlorite pump. Pump will vary SPEED to produce desired flow rate.

2. Citric Acid:
    a. 50 percent citric acid solution is used for routine maintenance and recovery cleanings of the MFS units.
    b. The citric acid system consists of two storage totes, one tote weight scale, two chemical metering pumps, one flowmeter, and associated valves and piping.
    c. Citric Acid Pumps:
        1) The Membrane System Control PLC will call for a flow rate of citric acid required for a cleaning procedure. Refer to the Membrane System Supplier documents for details. When called, the SCADA will START the duty citric acid pump. Pump will vary SPEED to produce desired flow rate.
3. Sulfuric Acid:
    d. 50 percent Sulfuric Acid solution is used to reduce the pH of the solution used for routine maintenance and recovery cleanings of the MFS units.
    e. The Sulfuric Acid system consists of one storage tote, one tote weight scale, one chemical metering pump, one flowmeter, and associated valves and piping.
    f. Sulfuric Acid Pump:
        1) The Membrane System Control PLC will call for a flow rate of Sulfuric Acid required for a cleaning procedure. Refer to the Membrane System Supplier documents for details. When called, the SCADA will START the Sulfuric Acid pump. Pump will vary SPEED to produce desired flow rate.
4. Sodium Bisulfite:
    a. 38 percent sodium bisulfite solution is used to de-chlorinate the cleaning waste that results from maintenance and recovery cleanings of the MFS units.
    b. The flow rate and duration of the flow of sodium bisulfite is determined by the chlorine level in the CIP waste after each cleaning cycle and how much sodium bisulfite is required to de-chlorinate. The vendor-supplied pH/chlorine panel located near the CIP tank will be connected to the CIP pump discharge piping to analyze pH and chlorine concentration. As the

pumps convey the CIP water from the membrane tanks to the CIP tank, sodium bisulfite will be dosed until the chlorine analyzer reads a pre-determined setpoint.

c. This logic will reside in the vendor-supplied PLC, which will control the operation of the metering pump.

d. The sodium bisulfite system consists of one storage tote, one tote weight scale, one chemical metering pump, one flowmeter, and associated valves and piping.

e. Sodium Bisulfite Pump:

1) The Membrane System Control PLC will call for a flow rate of sodium bisulfite required for a cleaning procedure. Refer to the Membrane System Supplier documents for details. When called, the SCADA will START the sodium bisulfite pump. Pump will vary SPEED to produce desired flow rate.

5. Sodium Hydroxide:

a. 50 percent Sodium Hydroxide solution is used to neutralize the pH of the cleaning waste that results from maintenance and recovery cleanings of the MFS units.

b. The flow rate and duration of the flow of Sodium Hydroxide needed will be determined by measuring pH of the CIP waste after each cleaning cycle. The MFS vendor supplied pH/chlorine panel located near the CIP tank will be connected to the CIP pump discharge piping to analyze pH and chlorine concentration. As the pumps convey the CIP water from the membrane tanks to the CIP tank, Sodium Hydroxide will be dosed until the pH analyzer reads a pre-determined setpoint.

c. This logic will reside in the vendor-supplied PLC, which will control the operation of the metering pump.

d. The Sodium Hydroxide system consists of one storage tote, one tote weight scale, one chemical metering pump, one flowmeter, and associated valves and piping.

e. Sodium Hydroxide Pump:

1) The Membrane System Control PLC will call for a flow rate of Sodium Hydroxide required for a cleaning procedure. Refer to the Membrane System Supplier documents for details. When called, the SCADA will START the Sodium Hydroxide pump. Pump will vary SPEED to produce desired flow rate.

E. Safety Interlocks:

All interlocks and permissives are hardwired unless otherwise noted.

1. Sodium Hypochlorite Storage Tank:

a. A horn shall sound, a beacon shall start and an alarm shall be generated remotely if the Sodium Hypochlorite Storage Tank High Level is triggered.

2. Sodium Hypochlorite Storage Tank Shutoff Valve:

a. The Sodium Hypochlorite Storage Tank Discharge Valve is considered READY when:

1) Sodium Hypochlorite Storage Tank Discharge Valve control mode is AUTO.
2) No Sodium Hypochlorite Storage Tank Discharge Valve FAIL alarms are active.

b. The Sodium Hypochlorite Storage Tank Discharge Valve shall be interlocked to generate an alarm and CLOSE if the following alarm or signal is activated:
1) Rate of level decrease in the sodium hypochlorite storage tank is less than an operator adjustable setpoint rate of decrease. This alarm shall be generated through the SCADA system.

3. Sodium Hypochlorite Pumps:
a. The sodium hypochlorite pumps shall be interlocked to generate an alarm and STOP if any of the following alarms or signals are activated:
1) Sodium Hypochlorite Pump No. 1 Fail Alarm
2) Sodium Hypochlorite Pump No. 2 Fail Alarm.
3) Sodium Hypochlorite Pump No. 1 High Discharge Pressure.
4) Sodium Hypochlorite Pump No. 2 High Discharge Pressure.
5) Sodium Hypochlorite Storage Tank LOW LOW LEVEL.

b. The sodium hypochlorite pumps shall START only if all of the following permissives are met:
1) Sodium Hypochlorite Storage Tank is READY.
2) A sodium hypochlorite pump is not already running.
3) Sodium Hypochlorite Storage Area Containment Sump is not HIGH LEVEL.

c. A sodium hypochlorite pump is considered READY when:
1) The sodium hypochlorite pump control mode is AUTO.
2) No sodium hypochlorite pump FAIL alarms are active.

4. Citric Acid Pumps:
a. The citric acid pumps shall be interlocked to generate an alarm and STOP if any of the following alarms or signals are activated:
1) Citric Acid Pump No. 1 Fail Alarm.
2) Citric Acid Pump No. 2 Fail Alarm.
3) Citric Acid Pump No. 1 Discharge High Pressure.
4) Citric Acid Pump No. 2 Discharge High Pressure.

b. The citric acid pumps shall START only if all of the following permissive is met:
1) Citric Acid Citric Acid Tote Weight Scale is not LOW WEIGHT.
2) Citric Acid Storage Area Containment Sump is not HIGH LEVEL.
3) The citric acid pump control mode is AUTO.
4) No citric acid pump FAIL alarms are active.

5. Sulfuric Acid Pump:
c. The Sulfuric Acid pump shall be interlocked to generate an alarm and STOP if any of the following alarms or signals are activated:
1) Sulfuric Acid Pump Fail Alarm.
2) Sulfuric Acid Pump Discharge High Pressure.

d. The Sulfuric Acid pump shall START only if all of the following permissive is met:
    1) Sulfuric Acid Tote Weight Scale is not LOW WEIGHT.
    2) Sulfuric Acid Storage Area Containment Sump is not HIGH LEVEL.
    3) The Sulfuric Acid pump control mode is AUTO.
    4) No Sulfuric Acid pump FAIL alarms are active.

6. Sodium Bisulfite Pump:
    e. The sodium bisulfite pump shall be interlocked to generate an alarm and STOP if any of the following alarms or signals are activated:
        1) Sodium Bisulfite Pump Fail Alarm.
        2) Sodium Bisulfite Pump Discharge High Pressure.
    f. The sodium bisulfite pump shall START only if all of the following permissive is met:
        1) Sodium Bisulfite Tote Weight Scale is not LOW WEIGHT.
        2) Sodium Bisulfite Storage Area Containment Sump is not HIGH LEVEL.
    g. A sodium bisulfite pump is considered READY when:
        1) The sodium bisulfite pump control mode is AUTO.
        2) No sodium bisulfite pump FAIL alarms are active.
7. Sodium Hydroxide Pump:
    h. The Sodium Hydroxide pump shall be interlocked to generate an alarm and STOP if any of the following alarms or signals are activated:
        1) Sodium Hydroxide Pump Fail Alarm.
        2) Sodium Hydroxide Pump Discharge High Pressure.
    i. The Sodium Hydroxide pump shall START only if all of the following permissive is met:
        1) Sodium Hydroxide Tote Weight Scale is not LOW WEIGHT.
        2) Sodium Hydroxide Storage Area Containment Sump is not HIGH LEVEL.
    j. A Sodium Hydroxide pump is considered READY when:
        1) The Sodium Hydroxide pump control mode is AUTO.
        2) No Sodium Hydroxide pump FAIL alarms are active.

F. Control Modes:
1. Sodium Hypochlorite
    a. General:
        1) The sodium hypochlorite unloading local control panel shall have a SILENCE button to silence the horn.
        2) The Sodium Hypochlorite Storage Tank Shutoff Valve shall have a LOCAL/OFF/REMOTE (LOR) switch installed on the LCP.
        3) The Sodium Hypochlorite Storage Tank Shutoff Valve shall have a OPEN/STOP/CLOSE (OSC) handswitch installed on LCP.
        4) The sodium hypochlorite diaphragm metering pumps shall have a RESET button installed integrally on the face of the pump.

5) The sodium hypochlorite diaphragm metering pumps shall have an integrally mounted HAND/OFF/AUTO (HOA) handswitch installed on the face of the pump.
6) The sodium hypochlorite diaphragm pumps shall have START and STOP handswitches installed on the face of the pump.
7) The sodium hypochlorite tubing pumps shall have an integrally mounted SPEED control installed on the face of the pump.
8) The sodium hypochlorite hose pumps shall have a HAND/OFF/AUTO (HOA) handswitch, START, STOP, and RESET buttons, and SPEED control on the local control panels.

b. Off Mode (HOA in OFF):
1) Pumps shall not operate.

c. Hand Mode (HOA in HAND):
1) Pumps may START or STOP from the integral or LCP controls.
2) Pump SPEED may be adjusted to vary flow rate.

d. SCADA Hand (HOA in AUTO, SCADA in HAND):
1) N/A

e. SCADA Auto Mode (HOA in AUTO, SCADA in AUTO):
1) Pump will be called to START and STOP by PLC-RWIF when requested by Membrane System PLC
2) For membrane system cleaning procedures, the Membrane System PLC will call for a chemical cleaning pump to start and deliver requested flow rate.
a) SCADA will START the pump and vary SPEED to deliver required flow rate. Membrane System PLC will call for chemical feed to STOP and SCADA will STOP pump.
b) SCADA will confirm to Membrane System PLC that pump is running and the flow rate.
3) When sodium hypochlorite is required in the backpulse tank, the SCADA will OPEN the backpulse tank sodium hypochlorite feed valve (BAV-XXX-XXX) and START the sodium hypochlorite pump.
a) An operator adjustable timer can be used to periodically OPEN the backpulse tank sodium hypochlorite feed valve. Provide two adjustable feed periods per day for the backpulse tank sodium hypochlorite feed valve. The duration will be between 1 and 30 minutes.
b) The sodium hypochlorite pump will START and operate while the backpulse tank sodium hypochlorite feed valve (BAV-XXX-XXX) is OPEN.
4) Only one sodium hypochlorite feed system may be operated from the SCADA at a time.

2. Citric Acid
a. General:
1) The citric acid diaphragm metering pumps shall have a RESET button installed integrally on the face of the pump.

2) The citric acid diaphragm metering pumps shall have an integrally mounted HAND/OFF/AUTO (HOA) handswitch installed on the face of the pump.
3) The citric acid diaphragm pumps shall have an integrally mounted START and STOP handswitches installed on the face of the pump.
4) The citric acid diaphragm metering pumps shall have an integrally mounted SPEED control installed on the face of the pump.
5) The citric acid diaphragm metering pumps shall have a HAND/OFF/AUTO (HOA) handswitch, START, STOP, and RESET buttons, and SPEED control on the local control panels.

b. Off Mode (HOA in OFF):
1) Pumps shall not operate.

c. Hand Mode (HOA in HAND):
1) Pumps may START or STOP from the integral or LCP controls.
2) Pump SPEED may be adjusted to vary flow rate.

d. SCADA Hand (HOA in AUTO, SCADA in HAND):
1) N/A

e. SCADA Auto Mode (HOA in AUTO, SCADA in AUTO):
1) Pump will be called to START and STOP by PLC-RWIF when requested by Membrane System PLC
2) For membrane system cleaning procedures, the Membrane System PLC will call for a chemical cleaning pump to start and deliver requested flow rate.
a) SCADA will START the pump and vary SPEED to deliver required flow rate. Membrane System PLC will call for chemical feed to STOP and SCADA will STOP pump.
b) SCADA will confirm to Membrane System PLC that pump is running and the flow rate.
3) Only one citric acid feed system may be operated from the SCADA at a time.

3. Sulfuric Acid

a. General:
1) The Sulfuric Acid diaphragm metering pumps shall have a RESET button installed integrally on the face of the pump.
2) The Sulfuric Acid diaphragm metering pumps shall have an integrally mounted HAND/OFF/AUTO (HOA) handswitch installed on the face of the pump.
3) The Sulfuric Acid diaphragm pumps shall have an integrally mounted START and STOP handswitches installed on the face of the pump.
4) The Sulfuric Acid diaphragm metering pumps shall have an integrally mounted SPEED control installed on the face of the pump.
5) The Sulfuric Acid diaphragm metering pumps shall have a HAND/OFF/AUTO (HOA) handswitch, START, STOP, and RESET buttons, and SPEED control on the local control panels.

b. Off Mode (HOA in OFF):
    1) Pumps shall not operate.
c. Hand Mode (HOA in HAND):
    1) Pumps may START or STOP from the integral or LCP controls.
    2) Pump SPEED may be adjusted to vary flow rate.
d. SCADA Hand (HOA in AUTO, SCADA in HAND):
    1) N/A
e. SCADA Auto Mode (HOA in AUTO, SCADA in AUTO):
    1) Pump will be called to START and STOP by PLC-RWIF when requested by Membrane System PLC.
    2) For membrane system cleaning procedures, the Membrane System PLC will call for a chemical cleaning pump to start and deliver requested flow rate.
        a) SCADA will START the pump and vary SPEED to deliver required flow rate. Membrane System PLC will call for chemical feed to STOP and SCADA will STOP pump.
        b) SCADA will confirm to Membrane System PLC that pump is running and the flow rate.
    3) Only one Sulfuric Acid feed system may be operated from the SCADA at a time.

4. Sodium Bisulfite
    a. General:
        1) The sodium bisulfite diaphragm metering pumps shall have a RESET button installed integrally on the face of the pump.
        2) The sodium bisulfite diaphragm metering pumps shall have an integrally mounted HAND/OFF/AUTO (HOA) handswitch installed on the face of the pump.
        3) The sodium bisulfite diaphragm pumps shall have an integrally mounted START and STOP handswitches installed on the face of the pump.
        4) The sodium bisulfite diaphragm metering pumps shall have an integrally mounted SPEED control installed on the face of the pump.
        5) The sodium bisulfite diaphragm metering pumps shall have a HAND/OFF/AUTO (HOA) handswitch, START, STOP, and RESET buttons, and SPEED control on the local control panels.
    b. Off Mode (HOA in OFF):
        1) Pumps shall not operate.
    c. Hand Mode (HOA in HAND):
        1) Pumps may START or STOP from the integral or LCP controls.
        2) Pump SPEED may be adjusted to vary flow rate.
    d. SCADA Hand (HOA in AUTO, SCADA in HAND):
        1) N/A
    e. SCADA Auto Mode (HOA in AUTO, SCADA in AUTO):
        1) Pump will be called to START and STOP by PLC-RWIF when requested by Membrane System PLC.

2) For membrane system cleaning procedures, the Membrane System PLC will call for a chemical cleaning pump to start and deliver requested flow rate.
    a) SCADA will START the pump and vary SPEED to deliver required flow rate. Membrane System PLC will call for chemical feed to STOP and SCADA will STOP pump.
    b) SCADA will confirm to Membrane System PLC that pump is running and the flow rate.
3) Only one sodium bisulfite feed system may be operated from the SCADA at a time.

5. Sodium Hydroxide
    a. General:
        1) The Sodium Hydroxide diaphragm metering pumps shall have a RESET button installed integrally on the face of the pump.
        2) The Sodium Hydroxide diaphragm metering pumps shall have an integrally mounted HAND/OFF/AUTO (HOA) handswitch installed on the face of the pump.
        3) The Sodium Hydroxide diaphragm pumps shall have an integrally mounted START and STOP handswitches installed on the face of the pump.
        4) The Sodium Hydroxide diaphragm metering pumps shall have an integrally mounted SPEED control installed on the face of the pump.
        5) The Sodium Hydroxide diaphragm metering pumps shall have a HAND/OFF/AUTO (HOA) handswitch, START, STOP, and RESET buttons, and SPEED control on the local control panels.
    b. Off Mode (HOA in OFF):
        1) Pumps shall not operate.
    c. Hand Mode (HOA in HAND):
        1) Pumps may START or STOP from the integral or LCP controls.
        2) Pump SPEED may be adjusted to vary flow rate.
    d. SCADA Hand (HOA in AUTO, SCADA in HAND):
        1) N/A
    e. SCADA Auto Mode (HOA in AUTO, SCADA in AUTO):
        1) Pump will be called to START and STOP by PLC-RWIF when requested by Membrane System PLC.
        2) For membrane system cleaning procedures, the Membrane System PLC will call for a chemical cleaning pump to start and deliver requested flow rate.
            a) SCADA will START the pump and vary SPEED to deliver required flow rate. Membrane System PLC will call for chemical feed to STOP and SCADA will STOP pump.
            b) SCADA will confirm to Membrane System PLC that pump is running and the flow rate.
        3) Only one Sodium Hydroxide feed system may be operated from the SCADA at a time.

G. Failure Modes:
   1. Communication Loss: Pumps to shut down. Pump will not return to service until communication is restored. Pumps to return to AUTO status.
   2. Power Loss: Pumps to be reset manually by operators and returned to AUTO or READY status..

1.12 ACH FACILITY

B. Summary:
   1. Two ACH diaphragm metering pumps will be used to deliver 40 percent concentration ACH coagulant to two dosage points on the self-cleaning strainers common discharge header to promote the removal of turbidity, TSS, and TOC.
   2. The ACH facility consists of two storage totes, one tote weight scale, two chemical metering pumps, one flowmeter, and associated valves and piping.
   3. The ACH dosage rate will be an operator set-point that will depend on the raw water flow rate as determined by the flow meter located at the Raw Water Pump Station. The operator will input the percent concentration of the coagulant and the desired dose setpoint in mg/L. SCADA will take the flow rate from the flow meter located at the Raw Water Pump Station and calculate the necessary chemical flow rate to deliver to the two ACH dosage points.

C. P&ID: See Sheet I-2.07.

D. Components:
1. Equipment:

Item Description	Item Tag
ACH Metering Pump No. 1	*TBD*
ACH Metering Pump No. 1 Local Control Panel	*TBD*
ACH Metering Pump No. 2	*TBD*
ACH Metering Pump No. 2 Local Control Panel	*TBD*

2. Instruments:

Item Description	Item Tag	Units	Action	Setpoint	Range
ACH Storage Tank Level Element	*TBD*	feet	NA	NA	NA
ACH Storage Area Containment Sump Level Element	*TBD*	feet	NA	NA	NA
ACH Feed Area Containment Sump Level Element	*TBD*	feet	NA	NA	NA
ACH Metering Pump No. 1 Pressure Indicator/Transmitter	*TBD*	psi	NA	NA	NA
ACH Metering Pump No. 2 Pressure Indicator/Transmitter	*TBD*	psi	NA	NA	NA
ACH Flow Meter	*TBD*	psi	NA	NA	NA

E. Safety Interlocks:
1. All interlocks and permissives are hardwired unless otherwise noted.
2. ACH Pumps:
a. The ACH pumps shall be interlocked to generate an alarm and STOP if any of the following alarms or signals are activated:
1) ACH Pump No. 1 Fail Alarm.
2) ACH Pump No. 2 Fail Alarm.
3) ACH Pump No. 1 Discharge High Pressure.
4) ACH Pump No. 2 Discharge High Pressure.
5) ACH Pump No. 1 Leak.
6) ACH Pump No. 2 Leak.
b. The ACH pumps shall START only if all of the following permissive is met:
1) ACH Tote Weight Scale is not LOW WEIGHT.
2) ACH Storage Area Containment Sump is not HIGH LEVEL.
3) ACH Feed Area Containment Sump is not HIGH LEVEL.
c. ACH pump is considered READY when:
1) The ACH pump control mode is AUTO.
2) No ACH pump FAIL alarms are active.

F. Control Modes:
   1. ACH
      a. General:
         1) The ACH diaphragm metering pumps shall have a RESET button installed integrally on the face of the pump.
         2) The ACH diaphragm metering pumps shall have an integrally mounted HAND/OFF/AUTO (HOA) handswitch installed on the face of the pump.
         3) The ACH diaphragm pumps shall have an integrally mounted START and STOP handswitches installed on the face of the pump.
         4) The ACH diaphragm metering pumps shall have an integrally mounted SPEED control installed on the face of the pump.
         5) The ACH diaphragm metering pumps shall have a HAND/OFF/AUTO (HOA) handswitch, START, STOP, and RESET buttons, and SPEED control on the local control panels.
      b. Off Mode (HOA in OFF):
         1) Pumps shall not operate.
      c. Hand Mode (HOA in HAND):
         1) Pumps may START or STOP from the integral or LCP controls.
         2) Pump SPEED may be adjusted to vary flow rate.
      d. SCADA Hand (HOA in AUTO, SCADA in HAND):
         1) Pumps may be START or STOP from the SCADA.
         2) Pump SPEED may be adjusted to vary flow rate.
         3) Operator may open and close ACH feed valves.
      e. SCADA Auto (HOA in AUTO, SCADA in AUTO):
         1) Pumps will be called to START and STOP by SCADA.
         2) When an ACH chemical pump is called to start and deliver requested flow rate.
            a) SCADA will START the pump and vary SPEED to deliver the required flow rate as calculated by SCADA based on the ACH concentration, desired dose setpoint, raw water influent flow measurement, and metering pump calibration.
         3) ACH feed valves shall OPEN when an ACH chemical pump is called to START.
         4) Only one ACH feed system may be operated from the SCADA at a time.

G. Failure Modes:
      a. Communication Loss: Pumps to shut down. Pump will not return to service until communication is restored. Pumps to return to AUTO status.
      b. Power Loss: Pumps to be reset manually by operators and returned to AUTO or READY status.

1.13 MODIFIED BULK SODIUM HYPOCHLORITE FEED FACILITY

A. Summary:
   1. Two sodium hypochlorite diaphragm metering pumps (1 duty, 1 standby) will be used to deliver 12.5 percent concentration sodium hypochlorite chemical solution to one dosage point on the membrane permeate common discharge header for disinfection.
   2. The Bulk Sodium Hypochlorite Feed Facility currently consists of three 20,000 gallon FRP storage tanks, four chemical diaphragm metering pumps, and associated valves and piping. Two additional chemical diaphragm metering pumps, one flow meter, and associated valves and piping will but added to the Bulk Sodium Hypochlorite Feed Facility to feed RWIF with sodium hypochlorite for disinfection.
   3. The sodium hypochlorite dosage rate will be an operator set-point that will depend on the membrane permeate discharge flow rate as determined by the flow meter located on the membrane permeate discharge header. The operator will input the percent concentration of the coagulant and the desired dose setpoint in mg/L. SCADA will take the flow rate from the flow meter located on the membrane permeate discharge header and calculate the necessary chemical flow rate to deliver to the two sodium hypochlorite dosage points. The chemical diaphragm metering pump will speed up or slow down according to the flow rate demand.

B. P&ID: See Sheet I-2.08 and I-2.09.

C. Components:
   1. Equipment:

Item Description	Item Tag
Sodium Hypochlorite Metering Pump No. 5	*TBD*
Sodium Hypochlorite Metering Pump No. 5 Local Control Panel	*TBD*
Sodium Hypochlorite Metering Pump No. 6	*TBD*
Sodium Hypochlorite Metering Pump No. 6 Local Control Panel	*TBD*

   2. Instruments:

Item Description	Item Tag	Units	Action	Setpoint	Range
Existing Sodium Hypochlorite Storage Tank No. 1 Radar Level Meter	*TBD*	feet	NA	NA	NA
Existing Sodium Hypochlorite Storage Tank No. 2 Radar Level Meter	*TBD*	feet	NA	NA	NA
Existing Sodium Hypochlorite Storage Tank No. 3 Radar Level	*TBD*	feet	NA	NA	NA

Meter					
Existing Sodium Hypochlorite Storage Tank No. 1 Float Switch	*TBD*	feet	NA	NA	NA
Existing Sodium Hypochlorite Storage Tank No. 2 Float Switch	*TBD*	feet	NA	NA	NA
Existing Sodium Hypochlorite Storage Tank No. 3 Float Switch	*TBD*	feet	NA	NA	NA
Existing Bulk Sodium Hypochlorite Feed Facility Storage Area Containment Sump Level Element	*TBD*	feet	NA	NA	NA
Existing Bulk Sodium Hypochlorite Feed Facility Feed Area Containment Sump Level Element	*TBD*	feet	NA	NA	NA
Sodium Hypochlorite Metering Pump No. 5 Pressure Indicator/Transmitter	*TBD*	psi	NA	NA	NA
Sodium Hypochlorite Metering Pump No. 6 Pressure Indicator/Transmitter	*TBD*	psi	NA	NA	NA
Sodium Hypochlorite Flow Meter	*TBD*	psi	NA	NA	NA

D. Safety Interlocks:
   1. All interlocks and permissives are hardwired unless otherwise noted.
      1. Sodium Hypochlorite Pumps:
         a. The sodium hypochlorite pumps shall be interlocked to generate an alarm and STOP if any of the following alarms or signals are activated:
            1) Sodium Hypochlorite Pump No. 5 Fail Alarm.
            2) Sodium Hypochlorite Pump No. 6 Fail Alarm.
            3) Sodium Hypochlorite Pump No. 5 High Discharge Pressure.
            4) Sodium Hypochlorite Pump No. 6 High Discharge Pressure.
            5) Sodium Hypochlorite Pump No. 5 Leak.
            6) Sodium Hypochlorite Pump No. 6 Leak.
            7) Existing Sodium Hypochlorite Storage Tank No. 1 LOW LOW LEVEL.
            8) Existing Sodium Hypochlorite Storage Tank No. 2 LOW LOW LEVEL.
            9) Existing Sodium Hypochlorite Storage Tank No. 3 LOW LOW LEVEL.

b. The sodium hypochlorite pumps shall START only if all of the following permissives are met:
    1) All Sodium Hypochlorite Storage Tanks are READY.
    2) An RWIF disinfection sodium hypochlorite pump is not already running.
    3) Existing Bulk Sodium Hypochlorite Feed Facility Storage Area Containment Sump is not HIGH LEVEL.
    4) Existing Bulk Sodium Hypochlorite Feed Facility Storage Area Containment Sump is not HIGH LEVEL.
c. A sodium hypochlorite pump is considered READY when:
    1) The sodium hypochlorite pump control mode is AUTO.
    2) No sodium hypochlorite pump FAIL alarms are active.

E. Control Modes:
1. Sodium Hypochlorite
    a. General:
        1) The sodium hypochlorite diaphragm metering pumps shall have a RESET button installed integrally on the face of the pump.
        2) The sodium hypochlorite diaphragm metering pumps shall have an integrally mounted HAND/OFF/AUTO (HOA) handswitch installed on the face of the pump.
        3) The sodium hypochlorite diaphragm pumps shall have an integrally mounted START and STOP handswitches installed on the face of the pump.
        4) The sodium hypochlorite diaphragm metering pumps shall have an integrally mounted SPEED control installed on the face of the pump.
        5) The sodium hypochlorite diaphragm metering pumps shall have a HAND/OFF/AUTO (HOA) handswitch, START, STOP, and RESET buttons, and SPEED control on the local control panels.
    b. Off Mode (HOA in OFF):
        1) Pumps shall not operate.
    c. Hand Mode (HOA in HAND):
        1) Pumps may START or STOP from the integral or LCP controls.
        2) Pump SPEED may be adjusted to vary flow rate.
    d. SCADA Hand (HOA in AUTO, SCADA in HAND):
        1) Pumps may be START or STOP from the SCADA.
        2) Pump SPEED may be adjusted to vary flow rate.
        3) Operator may open and close ACH feed valves.
    e. SCADA Auto (HOA in AUTO, SCADA in AUTO):
        1) Pumps will be called to START and STOP by SCADA.
        2) When a sodium hypochlorite chemical pump is called to start and deliver requested flow rate.
            a) SCADA will START the pump and vary SPEED to deliver the required flow rate as calculated by SCADA based on the sodium hypochlorite concentration, desired dose setpoint,

membrane permeate discharge flow measurement, and metering pump calibration.

3) Sodium hypochlorite feed valves shall OPEN when a sodium hypochlorite chemical pump is called to START.
4) Only one RWIF disnifection sodium hypochlorite feed system may be operated from the SCADA at a time.

F. Failure Modes:
   a. Communication Loss: Pumps to shut down. Pump will not return to service until communication is restored. Pumps to return to AUTO status.
   b. Power Loss: Pumps to be reset manually by operators and returned to AUTO or READY status.

G. SCADA Graphic Displays:
   1. As specified herein or shown on the P&IDs.
   2. Network communication status: Display communication status between the SCADA and all system PLCs and other sub systems.
   3. READY status and troubleshooting assistance:
      a. Indicate READY status for all systems at the SCADA.
      b. Provide a troubleshooting screen for each system, which will provide, at a minimum:
         1) A complete list of permissives for each system.
         2) The status of all permissives.

PART 2 - PRODUCTS (NOT USED)

PART 3 - EXECUTION (NOT USED)

++ END OF SECTION ++

SECTION 17455

OPERATOR INTERFACE TERMINAL SOFTWARE AND HARDWARE

PART 1 - PART 1 - GENERAL

1.1 SECTION INCLUDES

A. Supply and programming of Operator Interface Terminals (OIT) used to monitor and control electrical and process equipment.

B. Startup and commissioning of control systems using OIT.

C. Programming software supplied to owner.

1.2 SUBMITTALS

A. Manufacturers literature showing:
   1. Physical characteristics, dimensions, and weights.
   2. Mounting and installation requirements.
   3. Wiring information including power requirements and communication capabilities and cabling information.
   4. Available memory and screen storage information.
   5. Recommended spare parts.
   6. OIT screen development software information including:
      a. Minimum computer memory requirements for installation and use.
      b. Communication ports and cables to download OIT programs.

B. Proposed OIT screens showing the following:
   1. Number of proposed screens.
   2. Proposed color and graphics standards for OIT screen development.
   3. Menu tree showing how the operator will access all screens
   4. Description of each screen listing control and display points and indicating what actions the operator may perform on the screen.

1.3 GENERAL

A. OIT's are to be new, the most current version, and compatible with PLCs provided for this project.

B. Provide the latest version of the OIT programming software and use it to develop the OIT screens. License the software in the name of the owner. Deliver it to the Owner's programmer within 30 days of accepted plant startup or the stated date of project substantial completion.

PART 2 - PRODUCTS

2.1 OPERATOR INTERFACE TERMINAL

A. Manufacturer shall be Allen Bradley PanelView Plus.

B. Shall communicate directly with the PLC over Ethernet/IP or DF1, DH-485.

C. Shall be minimum 10" diagonal screens, color, with touchscreen keys.

D. Shall be capable of alarm detection and processing, discrete and analog display and control.

PART 3 - EXECUTION

3.1 OPERATOR INTERFACE TERMINAL

A. Mount the OIT in the control panel at an elevation and location convenient for operator access.

B. Program the OIT to perform all control and monitoring functions required by these specifications and the drawings.

C. Test the programming to verify all required functions.

D. Provide startup and commissioning assistance to make the plant operational.

E. Deliver "As Built" OIT programs, documentation, and original programming disks, manuals, and literature to owner

F. Warranty OIT programming for a period of one year from date of substantial completion. Correct errors and software "bugs" at no cost to owner for that period of time.

++ END OF SECTION ++

SECTION 17456

PROGRAMMING GENERAL

PART 1 - GENERAL

1.1 PROGRAMMING REQUIREMENTS

A. The software development and programming of the control functions shall be completed by the date defined in the Contract Documents. PLC programs and HMI/OIT configuration software shall meet the performance requirements described herein, and the control needs of the Owner.

B. The control descriptions provided in the Contract Documents do not provide every programming detail such as timers, function blocks, coils, contacts, or other logic elements that are required to write and implement complete PLC programs. The control descriptions are intended to describe the overall functional capability of the particular process being described. Communication with the Owner and the Engineer shall be necessary to convey the additional information needed to produce the working PLC programs.

C. Any discrepancies in these documents shall be brought to the attention of the Engineer, in writing. The Engineer will then issue further explanation. The decision of the Engineer will be final.

D. Control logic shall be programmed, furnished, and installed as specified. The Contractor shall be required to test and demonstrate to the satisfaction of the Engineer that the control logic functions as specified.

E. The PLC programs shall meet industry norms, and function in such a way as to maintain safe and reliable operation of the equipment they are designed to control. If the Engineer determines that the control logic and PLC programming fails to perform the functions described herein in a safe and reliable manner, the Contractor shall modify and correct the programs.

F. Set points for analog control loops shall be displayed in digital form on the screen, similar to a single loop controller display. Additionally:

1. Automatic and manual loop control shall be available.
2. The display will show the current set point, current output value, and the current process variable input values for each respective control loop.

3. The operator shall be able to take the loop out of the automatic mode, and drive the output signal manually from the HMI/OIT. The transfer from automatic to manual shall be "bumpless".
4. PLC Analog loops with PID (proportional, integral, and derivative) control shall be tunable from the HMI/OIT. Tuning of the PID loops shall be completed before Substantial Completion. The PID loops shall meet the following performance requirements:
    a. No more than two major process variable overshoots shall be permitted after a process upset, or a set point change. The peak overshoot shall not exceed the process variable set point value by more than 7 percent of its value.
    b. A major process variable overshoot is defined as a process variable time-domain measurement that exceeds the process variable set point by more the ±2 percent of the set point's value.
    c. The process variable shall settle to within ±2 percent of the set point value within a period of time (or oscillation) that is acceptable for the process control application, and as defined by the Engineer. The period of oscillation shall be adjustable by tuning the integral rate (or reset rate) of the PID loop.
5. Set points for timers, counters, levels, speed, and other variables shall be adjustable from the HMI/OIT screens by the Operator. Set point screens shall be password protected.

G. Integer or floating point values, from analog or totalized tags, shall be formatted to display at least three (3) significant digits. For example, a wet well level value shall be displayed as "14.7 FEET", or a pump flow rate shall be displayed as "1,591 GPM".

H. The PLC shall not be able to control any equipment item that is not in the Auto or Remote mode.

I. The PLC shall be programmed to monitor each of the analog signal inputs for instrument failures. If the input signal falls below 4 milliamps due to a short circuit, or an open current loop, the PLC shall produce an alarm signal to the HMI/OIT.

J. All motorized equipment will have Accumulation Runtime Counters associated with them, except for motor operated valves.

K. The Contractor shall be responsible for acquiring the services of a PLC programmer.

1.2 APPLICATION PROGRAMMING SOFTWARE

A. Refer to the Contract Documents and P&IDs for the process control descriptions and functional requirements to be implemented.

1. Furnish and install complete packages of the latest versions of Programming Software using PLC specification section 17461
2. PLC Programming
   a. Submit 2 copies of the PLC programs for review, prior to installation. The PLC programs shall be fully documented with unique symbol names for each program element (coils, contacts, inputs, outputs, etc.), and comments for logic elements. The comments shall clearly describe the function of the logic, so that another Programmer can understand the logic and be able to debug and modify the programs at a later date.
   b. Once the programs have been reviewed, comments and changes shall be incorporated into the programs and submitted for a final review. Upon final review of the programs, install the programs in the PLC to test the control logic using simulated I/O.
3. Provide instruction, maintenance manuals and diagrams for supplied programs, device drivers, and custom designed subprograms and device drivers developed for this project. Provide all materials in one or more three-ring binders. Separate sections by laminated numbered or descriptive tabs, with a table of contents to aid the user in finding specific information. Three-ring binders shall have labels on the spine identifying the contents of each volume.
4. Submit a training schedule in accordance with these Specifications.
5. Submittals shall be complete, neat and orderly.
6. Submit two CD-ROM/DVD copies of the PLC and HMI/OIT software programming in their final configuration. Also, submit all original software registered in the Owner's name, and all original documentation that accompanies the original software disks.

1.3 ON-SITE TRAINING

A. Arrange for instruction of the Owner's designated personnel. The instruction shall commence within 30 days of Owner request. Training shall include a minimum of 4 hours of owner training.

B. The Owner reserves the right to split training periods to accommodate personnel schedules.

C. The training sessions shall be structured to provide the Owner's personnel with a maximum of hands-on experience.

D. Control System Overview training shall consist of the following topics:

1. Definition of control modes such as AUTO, MANUAL, LOCAL, and REMOTE.
2. Entering and changing set points.

E. Provide the Owner with the ability to program the PLC, add new network components and PLCs as needed for future expansion of the system, and update or modify any HMI/OIT Screen to accommodate future expansion.

1.4 START-UP SUPPORT

A. The Contractor shall have field service and programming personnel on-site to provide start-up and commissioning services for a period of at least 90 days. The start-up service shall be coordinated with the Engineer. The start-up service shall be required prior to starting the final acceptance test.

1.5 PROGRAMMING SUPPORT

A. The Contractor shall be available to provide programming services for a period of at least 90 days. The start of this service shall commence after successful completion of the final acceptance test. This service shall consist of:

1. Furnishing additional programming that may be required.
2. Assisting Owner's personnel with additional technical support and training.

1.6 FACTORY WITNESS TESTING

A. Hardware and software components of the PLC System shall be thoroughly tested and "burned in" at the factory by the Contractor. Inform the Engineer 10 working days prior to the testing of the equipment. The Engineer and Owner shall witness these tests before shipment to the site. Provide copies of all test reports to the Engineer.

B. The Contractor shall be responsible for all transportation, meals, and accommodation expenses for the Owner's and Engineer's representative witnessing the factory test.

1.7 ON-SITE TESTING

A. On-site testing of the PLC system shall be performed prior to the final acceptance test. Submit a testing schedule detailing the timing and extent of the proposed testing and the test procedures to be followed.

B. Prior to the final acceptance test, the Engineer will review the status of the PLC system and determine if the final acceptance test can be performed. All primary elements shall be calibrated and all I/O signals shall be fully functional prior to the start of the final acceptance test.

C. Perform the PLC system final acceptance test and confirm the operation of all control loops, primary elements, control functions and sequences, and monitoring functions required of the complete PLC system. The PLC and HMI/OIT shall be operated continuously throughout the test without software or hardware failure. In the event of a failure, the acceptance test shall be terminated, the hardware or software failure shall be corrected, and the acceptance test shall be restarted. The Engineer and the Owner shall determine if it is necessary to restart the test at the first day of the test.

1.8 ACCEPTABLE PROGRAMMERS

A. Vertech

B. Zak Controls

++ END OF SECTION ++

SECTION 17458

PROGRAMMABLE LOGIC CONTROLLER SYSTEM

SOFTWARE AND ACCESSORIES

PART 1 - GENERAL

1.1 SCOPE

A. This Section includes furnishing all programmable logic controllers (PLCs) as indicated in related specifications and on the Drawings and specified herein.

B. Related Work specified elsewhere includes, but not limited to, Section 16000, General Electrical Requirements. Also, refer to requirements of Contract Documents for testing, adjusting, and balancing of systems.

1.2 QUALITY ASSURANCE

A. Equipment to be furnished under this Section shall be the product of firms regularly engaged in the design and manufacture of this type equipment. Manufacturer shall assume responsibility for, and guarantee performance of equipment furnished. However, this shall not be construed as relieving the CONTRACTOR from responsibility for the proper installation and functioning of the Work.

1.3 SUBMITTALS

A. Shop Drawings and Product Data: Include description of components, methods of connecting components, and the following:
   1. Hard copy of the programmable logic controller application program with full I/O documentation and explanation of conventions.
   2. Three copies of the programmable logic controller application program on CD-ROMS.
   3. System interconnection diagram drawing for PLCs, radios, antennas, Modbus Plus data highway, Ethernet data highway, and field instrumentation.
   4. Panel and enclosure plans, sections, and details.
   5. Access opening locations and required clearances for each panel and enclosure.
   6. Mounting plates and details for input and output chassis.
   7. Enclosure internal wiring and terminal blocks.
   8. Tabular Input and Output (I/O) Listing, Including the Following Data:
      a. Each I/O point, chassis number, module number, module I/O point number, name of I/O device.
      b. Instrumentation tag number of the I/O device in the Contract Documents.
      c. Electrical characteristics of the I/O signal.
      d. PLC internal address of each I/O.

9. Hard copies and machine-readable copies of PLC programs and personal computer graphics, reports, and database configuration.

B. Operating and Maintenance Manuals: Submit complete Operation and Maintenance Manuals in conformance with the Operation and Maintenance Manuals section of Section 01300, Submittals. Include the following:
   1. Programming procedures.
   2. Operations manuals.
   3. Maintenance and troubleshooting manuals.
   4. Spare parts manuals.
   5. Configuration manuals.
   6. List of service personnel contacts, including 24 hour service hot lines.

C. Shop Drawings: Submit for approval the following:
   1. A copy of this specification section, with addendum updates included, and all referenced and applicable sections, with addendum updates included, with each paragraph check-marked to indicate specification compliance or marked to indicate requested deviations from specification requirements. Check marks (✓) shall denote full compliance with a paragraph as a whole. If deviations from the specifications are indicated, and therefore requested by the CONTRACTOR, each deviation shall be underlined and denoted by a number in the margin to the right of the identified paragraph, referenced to a detailed written explanation of the reasons for requesting the deviation. The ENGINEER shall be the final authority for determining acceptability of requested deviations. The CONTRACTOR shall furnish equipment and/or services as specified if an exception and/or deviation is rejected. The remaining portions of the paragraph not underlined will signify compliance on the part of the CONTRACTOR with the specifications. Failure to include a copy of the marked-up specification sections, along with justification(s) for any requested deviations to the specification requirements, with the submittal shall be sufficient cause for rejection of the entire submittal with no further consideration.
   2. The CONTRACTOR shall submit the preventive maintenance information package as part of the shop drawing submittal package to the ENGINEER for review and approval. **SHOP DRAWING SUBMITTAL PACKAGE WILL NOT BE APPROVED WITHOUT ACCEPTANCE OF PREVENTIVE MAINTENANCE INFORMATION.**

1.4 PLC DIAGNOSTICS

A. Configure the PLC programs and OI to monitor the diagnostic registers in the PLC. Create special diagnostic screens at the OI to display the status of these registers and provide alarms of a PLC diagnostic failure. The following diagnostic status words shall be monitored:
   1. Module status and module failures.
   2. Internal battery condition.

3. Power supply status.

1.5 PLC APPLICATION PROGRAMMING SOFTWARE

A. Refer to the Contract Documents and P&IDs for the process control descriptions and functional requirements to be implemented using the following application software packages.
   1. Furnish and install complete packages of the latest version of Unity Pro programming software, using primarily Function Block Diagram (FBD) and provide HMI Graphic screens.
   2. PLC Programming:
      a. Submit two copies of the PLC programs for review, prior to installation. The programs shall be fully documented with unique symbol names for each program element (coils, contacts, inputs, outputs, etc.), and comments for every three rungs of logic. The rung comments shall clearly describe the function of the logic so that another programmer can understand the logic and be able to debug and modify the programs at a later date.
      b. Once the programs have been reviewed, comments and changes shall be incorporated into the programs and submitted for a final review. Upon final review of the programs, install the programs in the PLCs to test the control logic using simulated I/O.
      c. Provide instruction, maintenance manuals, and diagrams for supplied programs, device drivers, and custom designed subprograms and device drivers developed for this Project. Provide all materials in one or more three-ring binders. Separate sections by laminated numbered or descriptive tabs, with a table of contents to aid the user in finding specific information. Three-ring binders shall have labels on the spine identifying the contents of each volume.
      d. Submit a training schedule in accordance with these Specifications.
      e. Submittals shall be complete, neat, and orderly.
      f. Submit two CD-ROM copies of the PLC and OI software programming in their final configuration. Also submit all original software registered in the OWNER'S name, and all original documentation that accompanies the original software diskettes.
      g. All programming shall be coordinated with the OWNER, who will provide programming standards to be used.
      h. OWNER will provide graphic symbol library for use during graphic screen development.
      i. OWNER and programmer will hold programming kick-off meeting to coordinate scope and requirements.

1.6 ON-SITE TRAINING

A. Arrange for instruction of the OWNER'S designated personnel. The instruction shall commence within 30 days of OWNER request. Training shall include a minimum of eight hours of OWNER training.

B. The OWNER reserves the right to split training periods to accommodate personnel schedules.

C. The training sessions shall be structured to provide the OWNER'S personnel with a maximum of hands-on experience.

D. Control System Overview Training Shall Consist of the Following Topics:
   1. Definition of control modes, such as AUTO, MANUAL, LOCAL, and REMOTE.
   2. Entering and changing setpoints.

E. Provide the OWNER with the ability to program the PLCs, add new network components and PLCs as needed for future expansion of the system, and update or modify any OI screen to accommodate future expansion.

1.7 START-UP SUPPORT

A. The CONTRACTOR shall have field service and programming personnel on-site to provide start-up and commissioning services for a period of at least five days. The start-up service shall be coordinated with the ENGINEER. The start-up service shall be required prior to starting the final acceptance test.

1.8 PROGRAMMING SUPPORT

A. The CONTRACTOR shall be available to provide programming services for a period of at least 15 days. The start of this service shall commence after successful completion of the final acceptance test. This service shall consist of:
   1. Furnishing additional programming that may be required.
   2. Assisting OWNER'S personnel with additional technical support and training.

1.9 FACTORY WITNESS TESTING

A. Hardware and software components of the PLC system shall be thoroughly tested and "burned in" at the factory by the CONTRACTOR. Inform the ENGINEER 10 working days prior to the testing of the equipment. The ENGINEER and OWNER shall witness these tests before shipment to the site. Provide copies of all test reports to the ENGINEER.

B. The CONTRACTOR shall be responsible for all transportation, meals, and accommodation expenses for the OWNER'S and ENGINEER'S representative witnessing the factory test.

1.10 ON-SITE TESTING

A. On-site testing of the PLC system shall be performed prior to the final acceptance test. Submit a testing schedule detailing the timing and extent of the proposed testing and the test procedures to be followed.

B. Prior to the final acceptance test, the ENGINEER will review the status of the PLC system and determine if the final acceptance test can be performed. All primary elements shall be calibrated and all I/O signals shall be fully functional prior to the start of the final acceptance test.

C. Perform the PLC system final acceptance test and confirm the operation of all control loops, primary elements, control functions and sequences, and monitoring functions required of the complete PLC system. The PLC and OI shall be operated continuously throughout the test without software or hardware failure. In the event of a failure, the acceptance test shall be terminated, the hardware or software failure shall be corrected, and the acceptance test shall be restarted. The ENGINEER and the OWNER shall determine if it is necessary to restart the test at the first day of the test. The final acceptance test shall run uninterrupted for seven calendar days.

1.11 GENERAL PROGRAMMING REQUIREMENTS

A. The software development and programming of the control functions described herein shall be completed by the date defined in the Contract Documents. PLC programs and OI configuration software shall meet the performance requirements described herein, and the control needs of the OWNER.

B. The control descriptions provided herein do not provide every programming detail such as timers, function blocks, coils, contacts, or other relay ladder logic elements that are required to write and implement complete PLC programs. The control descriptions are intended to describe the overall functional capability of the particular process being described. Communication with the OWNER and the ENGINEER shall be necessary to convey the additional information needed to produce the working PLC programs.

C. Any discrepancies in these documents shall be brought to the attention of the ENGINEER, in writing. The ENGINEER will then issue further explanation. The decision of the ENGINEER will be final.

D. Control logic shall be programmed, furnished, and installed as specified. The CONTRACTOR shall be required to test and demonstrate to the satisfaction of the ENGINEER that the control logic functions as specified.

E. The PLC programs shall meet industry norms, and function in such a way as to maintain safe and reliable operation of the equipment they are designed to control. If the ENGINEER determines that the control logic and PLC programming fails to perform the functions described herein in a safe and reliable manner, the CONTRACTOR shall modify and correct the programs.

F. Setpoints for analog control loops shall be displayed in digital form on the screen, similar to a single loop controller display. Additionally:
   1. Automatic and manual loop control shall be available.
   2. The display will show the current setpoint, current output value, and the current process variable input values for each respective control loop.
   3. The operator shall be able to take the loop out of the automatic mode and drive the output signal manually from the OI. The transfer from automatic to manual shall be "bumpless".
   4. PLC analog loops with PID (proportional, integral, and derivative) control shall be tunable from the OI. Tuning of the PID loops shall be completed before Substantial Completion. The PID loops shall meet the following performance requirements:
      a. No more than two major process variable overshoots shall be permitted after a process upset or a setpoint change. The peak overshoot shall not exceed the process variable setpoint value by more than 7% of its value.
      b. A major process variable overshoot is defined as a process variable time-domain measurement that exceeds the process variable setpoint by more the ±2% of the setpoint value.
      c. The process variable shall settle to within ±2% of the setpoints value within a period of time (or oscillation) that is acceptable for the process control application, and as defined by the ENGINEER. The period of oscillation shall be adjustable by tuning the integral rate (or reset rate) of the PID loop.

G. Integer or floating point values, from analog or totalized tags, shall be formatted to display at least three significant digits. For example, a tank level value shall be displayed as "16.2 FEET", or a pump flow rate shall be displayed as "1,324 GPM".

H. The PLC shall not be able to control any equipment item that is not in the Auto or Remote mode.

I. The PLCs shall be programmed to monitor each of their respective analog signal inputs for instrument failures. If the input signal falls below 4 milliamps due to a short circuit, or an open current loop, the PLC shall produce an alarm signal to the OI.

J. All motorized equipment (i.e., wells and pumps) will have Accumulation Runtime Counters associated with them.

PART 2 - PRODUCTS

2.1 APPLICATION SOFTWARE, PROGRAMMING HARDWARE, AND TRAINING

A. Provide fully annotated software with Logic Flow Diagram, rung-by-rung description, register, and variable cross-referencing. Reference program to control descriptions by Logic Flow Diagram.

B. Programming software will be the latest revision of Unity Pro as manufactured by Modicon.

PART 3 - EXECUTION

3.1 INSTALLATION

A. Install the programmable logic controller system in accordance with the programmable logic controller manufacturer's instructions and recommendations, including grounding specifications.

3.2 DEMONSTRATION

A. Establish a mutually agreed upon time for demonstrations with the ENGINEER.

B. Deliver written notification of demonstrations to ENGINEER at least seven days before demonstrations. Include an agenda for the demonstration and testing procedures with notification.

C. Demonstrate functional operation of programmable logic controller system hardware and logic program at system assembly location prior to shipment.

D. Demonstrate full functional operation of programmable logic controller system hardware and logic program at the Project job site when fully integrated to the field I/Os.

++ END OF SECTION ++

SECTION 17461

PROGRAMMABLE LOGIC CONTROLLER SYSTEM

(MODICON M340)

PART 1 - GENERAL

1.1 SUMMARY

A. Section includes solid state programmable controller.

B. PLC Assembly: Provide a PLC assembly, as shown on the Drawings. A PLC assembly consists of PLC processor, discrete and analog I/O bases, communication ports, and power supplies.

C. PLC assembly shall be mounted in a PLC NEMA 12 enclosure, as shown on the Plans.

1.2 SUBMITTALS

A. Design Data:
   1. Modbus TCP/IP addressing scheme.
   2. Modicon M340 PLC I/O and communication configuration.

B. Operating and Maintenance Manuals: Submit complete Operation and Maintenance Manuals in conformance with the Operation and Maintenance Manuals section of Section 01300, Submittals. Include the following:
   1. Programming procedures.
   2. System specifications.
   3. Electrical power requirements.
   4. Submit per Section 01300, Submittals.

C. Shop Drawings: Submit for approval the following:
   1. A copy of this specification section, with addendum updates included, and all referenced and applicable sections, with addendum updates included, with each paragraph check-marked to indicate specification compliance or marked to indicate requested deviations from specification requirements. Check marks (✓) shall denote full compliance with a paragraph as a whole. If deviations from the specifications are indicated, and therefore requested by the CONTRACTOR, each deviation shall be underlined and denoted by a number in the margin to the right of the identified paragraph, referenced to a detailed written explanation of the reasons for requesting the deviation. The ENGINEER shall be the final authority for determining acceptability of requested deviations. The CONTRACTOR shall furnish equipment and/or services as specified if an

exception and/or deviation is rejected. The remaining portions of the paragraph not underlined will signify compliance on the part of the CONTRACTOR with the specifications. Failure to include a copy of the marked-up specification sections, along with justification(s) for any requested deviations to the specification requirements, with the submittal shall be sufficient cause for rejection of the entire submittal with no further consideration.

2. The CONTRACTOR shall submit the preventive maintenance information package as part of the shop drawing submittal package to the ENGINEER for review and approval. **SHOP DRAWING SUBMITTAL PACKAGE WILL NOT BE APPROVED WITHOUT ACCEPTANCE OF PREVENTIVE MAINTENANCE INFORMATION.**

1.3 PLC HARDWARE AND OPERATING SOFTWARE

A. Provide programmable logic controller system components by a single manufacturer.

B. Provide programmable logic controller system manufacturer approved hardware, such as cable, mounting hardware, connectors, enclosures, racks, communication cable, splitters, terminators, and taps.

C. Programmable Logic Controller System Manufacturer: Modicon M340 CPU BMX P34 2010 minimum, or as shown on the Drawings.

D. Extend existing City software license as required by manufacturer's copyright for use with equipment provided under this Contract.

1.4 ENVIRONMENTAL REQUIREMENTS

A. Environmental Rating for Components of the Programmable Logic Controller System, except the Programming Equipment:
   1. Humidity: Maximum 95%, non-condensing.
   2. Ambient Temperature:
      a. Operational: 0° C to 60° C.
      b. Storage: -40° C to 80° C.

PART 2 - PRODUCTS

2.1 MANUFACTURERS

A. Programmable Logic Controller System: Modicon M340 PLC minimum, or as shown on the Drawings; no substitutions permitted.

PART 3 - PROGRAMMABLE LOGIC CONTROLLER SYSTEM DESCRIPTION

A. Programmable Logic Controller System: Underwriter Laboratories listed and CSA approved; Modular, capable of field expansion with additional hardware and software to allow tailoring of the system to process control applications.

B. When Programmable Logic Controller Loses DC Power:
   1. Outputs shall immediately turn off (De-energize).
   2. Internal battery shall provide power to retain user logic, controller configuration information, and data register contents for at least nine months.

C. Diagnostic LEDs: Capable of indicating major status conditions of the programmable logic controller.
   1. Upon power-up or power recovery, the programmable logic controller shall self-test operation of the microprocessor, check memory for integrity, verify communication between boards, and reset and resume the logic solving scan only when satisfactory.
   2. During each processing cycle, the programmable logic controller shall execute diagnostic routines or critical components within the system. Run time diagnostics shall determine causes of errors, flag causes, and locate failed I/O modules.
   3. Diagnostic information shall be available to maintenance personnel through the use of a computer based interface or other memory access devices.

D. Memory Capacity: Maximum 75% design utilization.

3.2 PROCESSOR

A. PLC processors shall be Modicon Compact Model BMX P34 2010 minimum unless designated otherwise on the Drawings. Provide an exterior mounted communication port suitable for programming the CPU with the programming computer defined in these Specifications. The PLCs shall be capable of performing logic control functions described in these Specifications based upon the program stored in memory and the status of I/Os.

B. Upon processor shutdown, outputs shall de-energize and go into a safe shutdown mode.

C. Processor: Capable of being programmed by one or more of the following:
   1. IBM compatible PC with RS-232 Serial, or Ethernet or USB serial comms.

D. Minimum Processor Standard Control Functions:
   1. Relay ladder logic.
   2. Latch/unlatch relays.
   3. Timers (0.01 sec., 0.1 sec., and 0.1 min.).
   4. Counters (up/down).

5. Data comparisons/transfers.
6. Synchronous shift registers (forward/reverse).
7. Transitional output.
8. Master control relay.
9. Bit read and control.
10. I/O forcing.
11. BCD to binary and binary to BCD conversion.
12. Immediate I/O update.
13. Run mode programming.

E. Additional Processor Features:
1. Computer/Network Communication Interface.
2. ASCII output (data handling and report generation).
3. Protected logic.
4. Proportional Integral Derivative Process Control.
5. Multiple Function Integer and Floating Point Math.

F. Processor: Capable of addressing I/O modules and PLCs using Modbus TCP/IP communications network.

G. All control functions at the respective well site shall be resident at the respective processor.

3.3 PROGRAM STORAGE

A. Solid state RAM (volatile) type.

B. RAM Battery Backup: Capable of retaining stored program information through a continuous power outage of at least nine months.

C. Memory Word: Comprised of 16 data and 2 parity bits.

D. Logic Words: Checked for parity upon being read from memory. Detection of a parity error shall cause immediate system shutdown and be indicated by a visual display.

E. The system shall have the capability to program software timers and counters into memory.

F. Timer Time Bases: Selectable from 0.01 second, 0.1 second, and 0.1 minute, minimum.

3.4 INPUT AND OUTPUT - GENERAL

A. Input or Output: Modules configured to process discrete inputs, discrete outputs, and analog inputs and analog outputs shown on Instrumentation Drawings. Input and

output modules shall be Modicon and specifically recommended for Modicon M340 PLC platform.

B. During normal operation, a malfunction in a remote I/O channel shall affect the operation of only the malfunctioning channel and not the operation of the CPU or other channels.

C. Upon remote channel shutdown the processor shall see inputs as de-energized on the malfunctioning channel and outputs shall de-energize on the malfunctioning channel.

D. User Wiring to I/O Modules: Through a heavy-duty terminal strip.

E. Power Input: 24VDC protected against short circuits with integral overcurrent and overvoltage protection.

F. Cables, Terminators, Connectors, Miscellaneous Hardware: Provide complete PLC assembly ready for use and mounting within a CONTRACTOR supplied panel.

3.5 MODICON M340 HARDWARE COMPONENTS

A. Modicon Part Numbers:

Part No.	Description
RACK	BMX XBP 0400 – 1200 Rack
PS24	BMX CPS 2010 24VDC Power Supply
PS120	BMX CPS 2000 120VAC Power Supply
DI	BMX DDI 1602 16 Point 24 VDC Sinking Discrete Input Module
DO	BMX DDO 1602 16 Point 24 VDC Sourcing Discrete Output Module
AI	BMX AMI 0410 4 Channel 4-20 mA Analog Input Module
AO	BMX AMM 0410 4 Channel 4-20 mA Analog Output Module
OIT	Modicon Magelis - Color Touchscreen (10-inch minimum display size preferred)

3.6 ETHERNET MODULE CNOE-211

A. Analog inputs shall have a minimum of 12 bits resolution and shall be configurable for 4 to 20 mA DC. The analog input shall be Modicon AMI 0410 and shall be configured for current input by inserting the appropriate jumper settings on the module for the channels that will be in use. Ground the shield of each signal cable at the AMI 0410 only. Provide external or user power as needed.

B. The analog outputs shall have four independently configurable channels and can provide true 12 bit resolution with high an accuracy of (+0.2% of full scale @ 25° C).
   1. The module will have the capability of detecting open current loop (broken wire) detection and warnings via LEDs and registers. The analog output shall be a

Modicon AMM 0410 and shall be configured for current output by setting the appropriate jumper settings on the module for the channels that will be in use.

C. The discrete input shall be Modicon DDI 1602 Input and shall have 16 Optocoupled Isolated Inputs. Module response time shall be 4 ms typical. Equipment installation following approved EMC practices; i.e., protective earthing and functional earthing, connections with good conductivity, and grounding cables of sufficient cross section. Use manufacture-approved cabling. Cable routing; i.e., separation of the data and signal lines from cables, which emit disturbances (e.g., power cables with switching transients). Provide external or user power as needed.

D. 16-point Output Module: Source voltage for any output load shall be 24 VDC. Manufacture recommendations and practices will be followed. Equipment installation following approved EMC practices; i.e., protective earthing and functional earthing, connections with good conductivity, and grounding cables of sufficient cross section. Use manufacture approved cabling. Cable routing; i.e., separation of the data and signal lines from cables, which emit disturbances (e.g., power cables with switching transients).

E. Indicator lights shall also be provided on each I/O point to indicate status of each signal. Each individual input or output point shall be optically isolated to protect the controller I/O circuitry from high voltage transients. External wiring shall terminate on removable terminal strips, or swing arms to allow quick installation, or extraction of I/O modules without disconnecting field wiring. Labels shall be provided on modules, or wiring arms that indicate the I/O address of each termination.

3.7 PROGRAMMING SOFTWARE

A. See Specification 17462, Modicon Unity PLC Systems Software and Accessories.

PART 4 - EXECUTION

4.1 SPARES

A. Furnish a minimum of 3 spare I/O module of each type provided.

B. Furnish a minimum of 1 Network/Communications card in the system.

C. Furnish a minimum of 1 spare PLC Chassis in the system.

D. Furnish 12 fuses of each type and size used on I/O modules power and inputs.

E. Furnish one spare processor of each type.

4.2 INSTALLED SPARE REQUIREMENTS:

A. I/O Points:
   1. Provide total of 25 percent spare I/O capacity for each type of I/O at every PLC and remote inputs and outputs (RIO).

B. Wire all spare I/O points to field terminal blocks in the same enclosure the PLC resides in.

4.3 PLC BACKPLANE CAPACITY

A. Provide 25-percent or 3 spare backplane slots, whichever is greater in all racks containing I/O.

4.4 PLC MEMORY

A. Provide 50-percent spare program volatile memory.

++ END OF SECTION ++

SECTION 17462

PROGRAMMABLE LOGIC CONTROLLER SYSTEM

SOFTWARE AND ACCESSORIES

PART 1 - GENERAL

1.1 SCOPE

A. This Section includes furnishing all programmable logic controllers (PLCs) as indicated in related specifications and on the Drawings and specified herein.

B. Related Work specified elsewhere includes, but not limited to, Section 16000, General Electrical Requirements. Also, refer to requirements of Contract Documents for testing, adjusting, and balancing of systems.

1.2 QUALITY ASSURANCE

A. Equipment to be furnished under this Section shall be the product of firms regularly engaged in the design and manufacture of this type equipment. Manufacturer shall assume responsibility for, and guarantee performance of equipment furnished. However, this shall not be construed as relieving the CONTRACTOR from responsibility for the proper installation and functioning of the Work.

1.3 SUBMITTALS

A. Shop Drawings and Product Data: Include description of components, methods of connecting components, and the following:
   1. Hard copy of the programmable logic controller application program with full I/O documentation and explanation of conventions.
   2. Three copies of the programmable logic controller application program on CD-ROMS.
   3. System interconnection diagram drawing for PLCs, radios, antennas, Modbus Plus data highway, Ethernet data highway, and field instrumentation.
   4. Panel and enclosure plans, sections, and details.
   5. Access opening locations and required clearances for each panel and enclosure.
   6. Mounting plates and details for input and output chassis.
   7. Enclosure internal wiring and terminal blocks.
   8. Tabular Input and Output (I/O) Listing, Including the Following Data:
      a. Each I/O point, chassis number, module number, module I/O point number, name of I/O device.
      b. Instrumentation tag number of the I/O device in the Contract Documents.
      c. Electrical characteristics of the I/O signal.
      d. PLC internal address of each I/O.

9. Hard copies and machine-readable copies of PLC programs and personal computer graphics, reports, and database configuration.

B. Operating and Maintenance Manuals: Submit complete Operation and Maintenance Manuals in conformance with the Operation and Maintenance Manuals section of Section 01300, Submittals. Include the following:
   1. Programming procedures.
   2. Operations manuals.
   3. Maintenance and troubleshooting manuals.
   4. Spare parts manuals.
   5. Configuration manuals.
   6. List of service personnel contacts, including 24 hour service hot lines.

C. Shop Drawings: Submit for approval the following:
   1. A copy of this specification section, with addendum updates included, and all referenced and applicable sections, with addendum updates included, with each paragraph check-marked to indicate specification compliance or marked to indicate requested deviations from specification requirements. Check marks (✓) shall denote full compliance with a paragraph as a whole. If deviations from the specifications are indicated, and therefore requested by the CONTRACTOR, each deviation shall be underlined and denoted by a number in the margin to the right of the identified paragraph, referenced to a detailed written explanation of the reasons for requesting the deviation. The ENGINEER shall be the final authority for determining acceptability of requested deviations. The CONTRACTOR shall furnish equipment and/or services as specified if an exception and/or deviation is rejected. The remaining portions of the paragraph not underlined will signify compliance on the part of the CONTRACTOR with the specifications. Failure to include a copy of the marked-up specification sections, along with justification(s) for any requested deviations to the specification requirements, with the submittal shall be sufficient cause for rejection of the entire submittal with no further consideration.
   2. The CONTRACTOR shall submit the preventive maintenance information package as part of the shop drawing submittal package to the ENGINEER for review and approval. **SHOP DRAWING SUBMITTAL PACKAGE WILL NOT BE APPROVED WITHOUT ACCEPTANCE OF PREVENTIVE MAINTENANCE INFORMATION.**

1.4 PLC DIAGNOSTICS

A. Configure the PLC programs and OI to monitor the diagnostic registers in the PLC. Create special diagnostic screens at the OI to display the status of these registers and provide alarms of a PLC diagnostic failure. The following diagnostic status words shall be monitored:
   1. Module status and module failures.
   2. Internal battery condition.

3. Power supply status.

1.5 PLC APPLICATION PROGRAMMING SOFTWARE

A. Refer to the Contract Documents and P&IDs for the process control descriptions and functional requirements to be implemented using the following application software packages.
   1. Furnish and install complete packages of the latest version of Unity Pro programming software, using primarily Function Block Diagram (FBD) and provide HMI Graphic screens.
   2. PLC Programming:
      a. Submit two copies of the PLC programs for review, prior to installation. The programs shall be fully documented with unique symbol names for each program element (coils, contacts, inputs, outputs, etc.), and comments for every three rungs of logic. The rung comments shall clearly describe the function of the logic so that another programmer can understand the logic and be able to debug and modify the programs at a later date.
      b. Once the programs have been reviewed, comments and changes shall be incorporated into the programs and submitted for a final review. Upon final review of the programs, install the programs in the PLCs to test the control logic using simulated I/O.
      c. Provide instruction, maintenance manuals, and diagrams for supplied programs, device drivers, and custom designed subprograms and device drivers developed for this Project. Provide all materials in one or more three-ring binders. Separate sections by laminated numbered or descriptive tabs, with a table of contents to aid the user in finding specific information. Three-ring binders shall have labels on the spine identifying the contents of each volume.
      d. Submit a training schedule in accordance with these Specifications.
      e. Submittals shall be complete, neat, and orderly.
      f. Submit two CD-ROM copies of the PLC and OI software programming in their final configuration. Also submit all original software registered in the OWNER'S name, and all original documentation that accompanies the original software diskettes.
      g. All programming shall be coordinated with the OWNER, who will provide programming standards to be used.
      h. OWNER will provide graphic symbol library for use during graphic screen development.
      i. OWNER and programmer will hold programming kick-off meeting to coordinate scope and requirements.

1.6 ON-SITE TRAINING

A. Arrange for instruction of the OWNER'S designated personnel. The instruction shall commence within 30 days of OWNER request. Training shall include a minimum of eight hours of OWNER training.

B. The OWNER reserves the right to split training periods to accommodate personnel schedules.

C. The training sessions shall be structured to provide the OWNER'S personnel with a maximum of hands-on experience.

D. Control System Overview Training Shall Consist of the Following Topics:
   1. Definition of control modes, such as AUTO, MANUAL, LOCAL, and REMOTE.
   2. Entering and changing setpoints.

E. Provide the OWNER with the ability to program the PLCs, add new network components and PLCs as needed for future expansion of the system, and update or modify any OI screen to accommodate future expansion.

1.7 START-UP SUPPORT

A. The CONTRACTOR shall have field service and programming personnel on-site to provide start-up and commissioning services for a period of at least five days. The start-up service shall be coordinated with the ENGINEER. The start-up service shall be required prior to starting the final acceptance test.

1.8 PROGRAMMING SUPPORT

A. The CONTRACTOR shall be available to provide programming services for a period of at least 15 days. The start of this service shall commence after successful completion of the final acceptance test. This service shall consist of:
   1. Furnishing additional programming that may be required.
   2. Assisting OWNER'S personnel with additional technical support and training.

1.9 FACTORY WITNESS TESTING

A. Hardware and software components of the PLC system shall be thoroughly tested and "burned in" at the factory by the CONTRACTOR. Inform the ENGINEER 10 working days prior to the testing of the equipment. The ENGINEER and OWNER shall witness these tests before shipment to the site. Provide copies of all test reports to the ENGINEER.

B. The CONTRACTOR shall be responsible for all transportation, meals, and accommodation expenses for the OWNER'S and ENGINEER'S representative witnessing the factory test.

1.10 ON-SITE TESTING

A. On-site testing of the PLC system shall be performed prior to the final acceptance test. Submit a testing schedule detailing the timing and extent of the proposed testing and the test procedures to be followed.

B. Prior to the final acceptance test, the ENGINEER will review the status of the PLC system and determine if the final acceptance test can be performed. All primary elements shall be calibrated and all I/O signals shall be fully functional prior to the start of the final acceptance test.

C. Perform the PLC system final acceptance test and confirm the operation of all control loops, primary elements, control functions and sequences, and monitoring functions required of the complete PLC system. The PLC and OI shall be operated continuously throughout the test without software or hardware failure. In the event of a failure, the acceptance test shall be terminated, the hardware or software failure shall be corrected, and the acceptance test shall be restarted. The ENGINEER and the OWNER shall determine if it is necessary to restart the test at the first day of the test. The final acceptance test shall run uninterrupted for seven calendar days.

1.11 GENERAL PROGRAMMING REQUIREMENTS

A. The software development and programming of the control functions described herein shall be completed by the date defined in the Contract Documents. PLC programs and OI configuration software shall meet the performance requirements described herein, and the control needs of the OWNER.

B. The control descriptions provided herein do not provide every programming detail such as timers, function blocks, coils, contacts, or other relay ladder logic elements that are required to write and implement complete PLC programs. The control descriptions are intended to describe the overall functional capability of the particular process being described. Communication with the OWNER and the ENGINEER shall be necessary to convey the additional information needed to produce the working PLC programs.

C. Any discrepancies in these documents shall be brought to the attention of the ENGINEER, in writing. The ENGINEER will then issue further explanation. The decision of the ENGINEER will be final.

D. Control logic shall be programmed, furnished, and installed as specified. The CONTRACTOR shall be required to test and demonstrate to the satisfaction of the ENGINEER that the control logic functions as specified.

E. The PLC programs shall meet industry norms, and function in such a way as to maintain safe and reliable operation of the equipment they are designed to control. If the ENGINEER determines that the control logic and PLC programming fails to perform the functions described herein in a safe and reliable manner, the CONTRACTOR shall modify and correct the programs.

F. Setpoints for analog control loops shall be displayed in digital form on the screen, similar to a single loop controller display. Additionally:
   1. Automatic and manual loop control shall be available.
   2. The display will show the current setpoint, current output value, and the current process variable input values for each respective control loop.
   3. The operator shall be able to take the loop out of the automatic mode and drive the output signal manually from the OI. The transfer from automatic to manual shall be "bumpless".
   4. PLC analog loops with PID (proportional, integral, and derivative) control shall be tunable from the OI. Tuning of the PID loops shall be completed before Substantial Completion. The PID loops shall meet the following performance requirements:
      a. No more than two major process variable overshoots shall be permitted after a process upset or a setpoint change. The peak overshoot shall not exceed the process variable setpoint value by more than 7% of its value.
      b. A major process variable overshoot is defined as a process variable time-domain measurement that exceeds the process variable setpoint by more the ±2% of the setpoint value.
      c. The process variable shall settle to within ±2% of the setpoints value within a period of time (or oscillation) that is acceptable for the process control application, and as defined by the ENGINEER. The period of oscillation shall be adjustable by tuning the integral rate (or reset rate) of the PID loop.

G. Integer or floating point values, from analog or totalized tags, shall be formatted to display at least three significant digits. For example, a tank level value shall be displayed as "16.2 FEET", or a pump flow rate shall be displayed as "1,324 GPM".

H. The PLC shall not be able to control any equipment item that is not in the Auto or Remote mode.

I. The PLCs shall be programmed to monitor each of their respective analog signal inputs for instrument failures. If the input signal falls below 4 milliamps due to a short circuit, or an open current loop, the PLC shall produce an alarm signal to the OI.

J. All motorized equipment (i.e., wells and pumps) will have Accumulation Runtime Counters associated with them.

PART 2 - PRODUCTS

2.1 APPLICATION SOFTWARE, PROGRAMMING HARDWARE, AND TRAINING

A. Provide fully annotated software with Logic Flow Diagram, rung-by-rung description, register, and variable cross-referencing. Reference program to control descriptions by Logic Flow Diagram.

B. Programming software will be the latest revision of Unity Pro as manufactured by Modicon.

PART 3 - EXECUTION

3.1 INSTALLATION

A. Install the programmable logic controller system in accordance with the programmable logic controller manufacturer's instructions and recommendations, including grounding specifications.

3.2 DEMONSTRATION

A. Establish a mutually agreed upon time for demonstrations with the ENGINEER.

B. Deliver written notification of demonstrations to ENGINEER at least seven days before demonstrations. Include an agenda for the demonstration and testing procedures with notification.

C. Demonstrate functional operation of programmable logic controller system hardware and logic program at system assembly location prior to shipment.

D. Demonstrate full functional operation of programmable logic controller system hardware and logic program at the Project job site when fully integrated to the field I/Os.

++ END OF SECTION ++