AMENDED

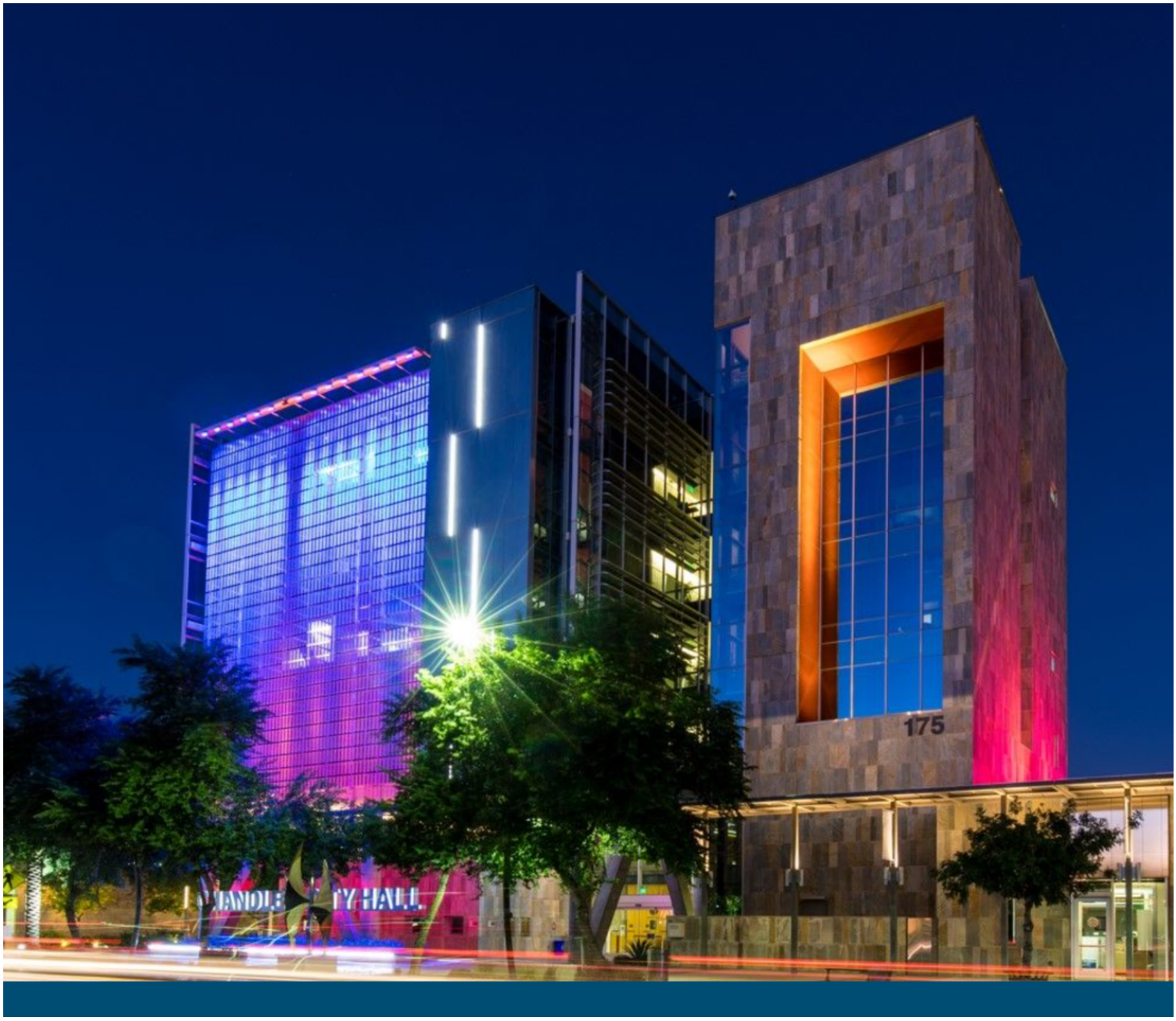

City Council Study Session

Monday, September 15, 2025
6:00 p.m.

Chandler City Council Chambers
88 E. Chicago St., Chandler, AZ

CHANDLER
arizona
Community of Innovation

Our Vision

We are a world class City that provides an exceptional quality of life.

Our Brand

A safe, diverse, equitable and inclusive community that connects people, chooses innovation and inspires excellence.

Innovative Focus

Innovation is the lifeblood of our community. The introduction of new ideas and methods is rooted in Chandler's culture and heritage. This thread of innovation embodies how we connect, plan and serve our city to be a contemporary, financially responsible and safe place to live and work.

Pursuant to Resolution No. 4464 of the City of Chandler and to A.R.S. 38-431.02, notice is hereby given to the members of the Chandler City Council and to the general public that the Chandler City Council will hold a STUDY SESSION open to the public on Monday, September 15, 2025, immediately following the Regular Council meeting which begins at 6:00 p.m., in the Chandler City Council Chambers, 88 E. Chicago Street, Chandler, Arizona. One or more members of the Chandler City Council may attend this meeting by telephone.

Persons with disabilities may request a reasonable modification or communication aids and services by contacting the City Clerk’s office at 480-782-2181 (711 via AZRS). Please make requests in advance as it affords the City time to accommodate the request. Agendas are available in the Office of the City Clerk, 175 S. Arizona Avenue.

Study Session Agenda

Call to Order

Roll Call

Consent Agenda

Items listed on the Consent Agenda may be enacted by one motion and one vote. If a discussion is required by members of the governing body, the item will be removed from the Consent Agenda for discussion and determination will be made if the item will be considered separately.

City Clerk

1. **Boards and Commissions Member Appointments**
   Move City Council approve the Board and Commission appointments as recommended.

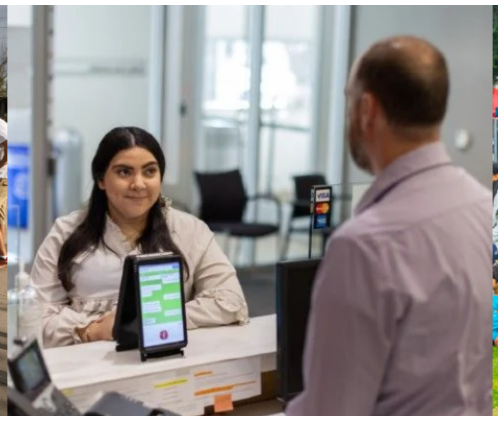

City Manager

2. **Resolution No. 5932, Authorizing a Grant Agreement and the Acceptance of Grant Funds from the Federal Highway Administration in the amount of $560,000**

   Move City Council pass and adopt Resolution No. 5932, authorizing a grant agreement and acceptance of grant funds from the U.S. Department of Transportation Federal Highway Administration Fiscal Year 2024 Safe Streets and Roads for All Grant Program in the amount of $560,000.

   Council Focus Area(s):

3. **Resolution No. 5934 Authorizing the Submittal of Pass-Through Indian Gaming Applications totaling S140,000 to Gila River Indian Community**

   Move City Council pass and adopt Resolution No. 5934 authorizing the submittal of pass-through Indian Gaming Revenue Sharing Grant Applications of $20,000 from Si Se Puede Foundation for STEM Center Programming, $20,000 from the Chandler Cultural Foundation for Connect Kids Program, and $100,000 from Teen Lifeline for Crisis Services to the Gila River Indian Community

   Council Focus Area(s):

Community Services

4. **Sole Source Purchase of OCLC Cloud Library Services**

   Move City Council approve the sole source purchase of OCLC Cloud Library Services in an amount not to exceed $140,000.

   Council Focus Area(s):

5. **Construction Manager at Risk (CMAR) Pre-Construction Services Agreement No. PR2401.251 with Hunter Contracting Co., for the Mesquite Groves Park – Pre-Construction**

   Move City Council award CMAR Pre-Construction Services Agreement No. PR2401.251 to Hunter Contracting Co., for the Mesquite Groves Park – Pre-Construction, in an amount not to exceed $319,800.68.

   Council Focus Area(s):

6. **Agreement No. CS2-595-4335, Amendment No. 4, with SiteOne Landscape Supply, LLC, for Rock, Granite, and Miscellaneous Supplies**

   Move City Council approve Agreement No. CS2-595-4335, Amendment No. 4, with SiteOne Landscape Supply, LLC, for rock, granite, and miscellaneous supplies, in an amount not to exceed $845,000, for a one-year period, September 1, 2025, through August 31, 2026.

   Council Focus Area(s):

Cultural Development

7. **Construction Agreement No. CA2202.501, Change Order No.1, with Arizona Public Service Company (APS), for Wall Street Overhead Power Conversion to Underground Design and Construction Services**

Move City Council award Agreement No. CA2202.501, Change Order No.1, to Arizona Public Service Company (APS), in the amount of $330,433.71, for a revised agreement amount not to exceed $1,581,673.43. In addition, authorize an appropriation transfer of $228,467 from General Fund, Non-Departmental Contingency Account to the General Government Capital Fund, Cultural Development Capital Cost Center, Professional Services account, Wall Street Improvements Program.

Council Focus Area(s):

Development Services

8. **Resolution No. 5939, a Pre-Annexation Development Agreement between the City of Chandler and Chandler Acquisition I, LLC Pertaining to Future Annexation and Development of 23.46 Acres Comprised of Parcel Nos. 303-41-020L and 303-41-020M on the Northside of Ocotillo Roard East of Arizona Avenue and West of McQueen Road**

Move City Council pass and adopt Resolution No. 5939 approving the Pre-Annexation Development Agreement between the City of Chandler and Chandler Acquisition I, LLC.

Council Focus Area(s):

9. **Temporary Construction Easement, Agreement for Temporary Construction Easement and Non-Exclusive Easements for Below-Grade Building Footings between the City of Chandler and S Arizona Avenue, LLC, an Arizona Based Limited Liability Company, for the Portion of the Building Located at 141 South Arizona Avenue**

Move City Council approve Temporary Construction Easement, Agreement Regarding Temporary Construction Easement and Non-Exclusive Easements for Below-Grade Building Footings between the City of Chandler and S Arizona Avenue, LLC, an Arizona Based Limited Liability Company, for the portion of the building located at 141 South Arizona Avenue provided that City execution of the two Non-Exclusive Easements shall be contingent upon the City's receipt of payment of the required one-time fees for these Easements.

Council Focus Area(s):

Economic Development

10. **Resolution No. 5930, Approving an Intergovernmental Agreement Between the City of Chandler and the Chandler Unified School District No. 80, Kyrene School District No. 28, Mesa Unified School District No. 4 and Tempe Union School District No. 213, to Collaborate on a Young Families and Young Professionals Community Attraction Campaign; and Authorizing the Acceptance of Grant Funds from the Chandler Industrial Development Authority as well as Grant Funds from Each of the Four School Districts to Pay for the Implementation and Launch of the Campaign**

Move City Council pass and adopt Resolution No. 5930 approving an Intergovernmental Agreement between the City of Chandler and the Chandler Unified School District No. 80 (CUSD), Kyrene School District No. 28 (KSD), Mesa Unified School District No. 4 (MUSD) and Tempe Union School District No. 213 (TUHSD), to collaborate on a Young Families and Young Professionals Community Attraction Campaign; and authorizing the acceptance of grant funds from the Chandler Industrial Development Authority in the amount of $150,000 as well as one-time grant funds of $10,000 from each of the four school districts, totaling $40,000, to assist with creating and implementing this multi-year community attraction campaign;and authorizing the city manager to sign and execute all documents, contracts, or agreements necessary to implement campaign.

Council Focus Area(s):

11. **Agreement No. ED3-920-4587, Amendment No. 3, for Search Engine Optimization and Pay Per Click Services**

Move City Council approve Agreement No. ED3-920-4587, Amendment No. 3, with Granicus, Inc., for search engine optimization and pay per click services, in an amount not to exceed $112,830, for the period of one year, beginning July 1, 2025, through June 30, 2026.

Council Focus Area(s):

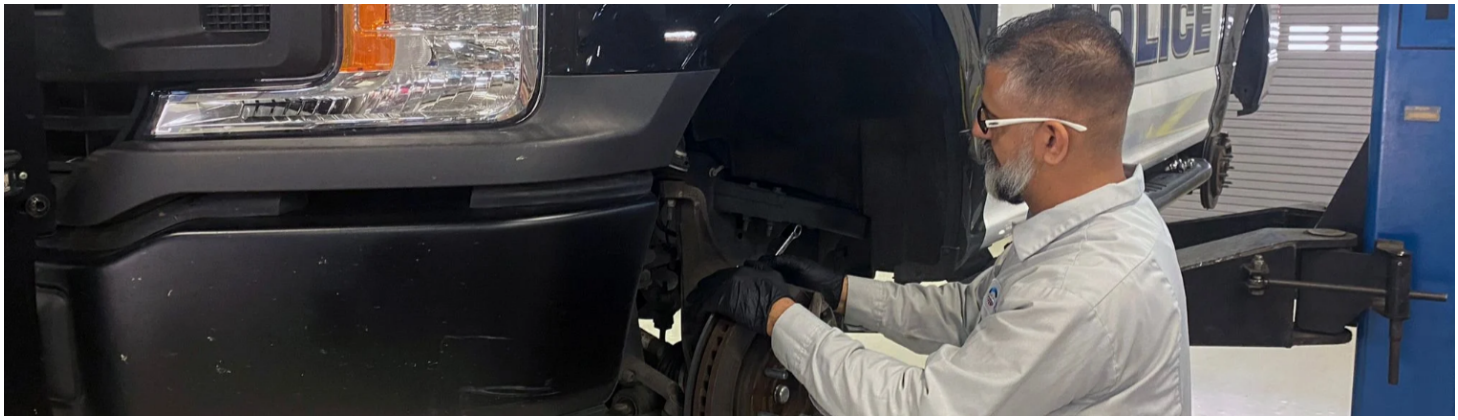

Facilities and Fleet

12. **Purchase of HVAC Equipment, Installation, and Services from TD Industries, Johnson Controls, Inc., Daikin Applied Americas, Inc., and Trane U.S. Inc.**

Move City Council approve the purchase of heat, ventilation, and cooling (HVAC) equipment, installation, and services, utilizing multiple vendors available under the Omnia Partners Contract No. R200403, with TDI Industries, Inc., Contract No. R200402, with Johnson Controls, Inc., Contract No. R200401, with Daikin Applied Americas, Inc., and Contract No. 15-JLP-023, with Trane U.S., Inc., and the Mohave Educational Services Cooperative Contract No. 19F-SMC-0904, with Sun Mechanical Contracting, Inc., in a combined amount not to exceed $3,645,000.

Council Focus Area(s):

13. **Purchase of Maintenance, Repairs and Purchase of Doors, Locking Systems, Door Hardware, and Operable Walls**

Move City Council approve the utilization of the Mohave Educational Services Cooperative Contract No. 21H-DHP-0917, for maintenance, repairs, and purchase of bay doors, locking systems, door hardware, and operable walls, from DH Pace Company, Inc., in an amount not to exceed $550,000, for the period of one year, September 17, 2025, through September 16, 2026.

Council Focus Area(s):

Fire Department

14. **Resolution No. 5933 Authorizing the Acceptance of Gaming Revenue Sharing Grant Funds from the Gila River Indian Community for the Chandler Fire Department**

Move City Council pass and adopt Resolution No. 5933 authorizing the acceptance of gaming revenue-sharing grant funds from the Gila River Indian Community in the amount of $59,262, for the purpose of supporting the purchase of battery-operated fans for fire apparatus for the Chandler Fire Department.

Council Focus Area(s):

15. **Purchase of Chest Compression Systems and Accessories from Stryker Sales, LLC**

Move City Council approve the purchase of Chest Compression Systems and Accessories from Stryker Sales, LLC., utilizing the Sourcewell Contract No. 041823-STY, in the amount of $257,099, and authorize the Acting City Manager or designee to sign a linking agreement with Stryker Sales, LLC.

Council Focus Area(s):

Human Resources

16. **Agreement No. 4802, Amendment No. 1, Employee Benefits Consulting Services**

    Move City Council approve Agreement No. 4802, Amendment No. 1, with The Segal Company (Western States), Inc., for employee benefits consulting services, in an amount not to exceed $120,000, for the period of one year, beginning January 1, 2026, through December 31, 2026.

17. **Agreement No. 1193, Calendar Year 2026 Amendment, with Delta Dental Plan of Arizona, Inc., for Dental Insurance Benefit**

    Move City Council approve Agreement No. 1193, Calendar Year 2026 Amendment, with Delta Dental Plan of Arizona, Inc., for dental insurance benefit, for the period of one year, beginning January 1, 2026, through December 31, 2026.

18. **Agreement No. HR-948-4496, Amendment No. 2, Basic and Voluntary Life and Accidental Death and Dismemberment Insurance**

    Move City Council approve Agreement No. HR2-948-4496, Amendment No. 2, with ReliaStar Life Insurance Company, for basic and voluntary life and accidental death and dismemberment insurance, in an amount not to exceed $960,000 per year, for the period of two years, beginning January 1, 2026, through December 31, 2027.

19. **Agreement No. HR2-948-4453, Amendment No. 2, Group Medical and Pharmacy Program Administration**

    Move City Council approve Agreement No. HR2-948-4453, Amendment No. 2, with Blue Cross Blue Shield of Arizona, for the administrative services agreement amendment for group medical and pharmacy program administration, for the period of one year, beginning January 1, 2026, through December 31, 2026.

Law

20. **Opioid Settlements**

Move City Council authorize the City of Chandler's participation in any settlements with pharmaceutical companies related to the opioid epidemic and authorize the City Attorney or City Manager or his designee, after consultation with the City Attorney's Office, to complete all documentation, verify claims, and execute all releases and agreements on behalf of the city that are necessary to participate in opioid-related settlements.

Council Focus Area(s):

21. **Settlement in Wakefield vs. City of Chandler, et al.**

Move City Council approve the settlement in the matter of Wakefield vs. City of Chandler, et al., in the amount of $45,000, in full and final settlement of all claims asserted without admitting liability, and to authorize the City Attorney to sign any necessary documents in such forms as are approved by the City Attorney to effectuate the terms and conditions of the settlement in this matter.

Council Focus Area(s):

22. **Settlement in Andres Ramirez, Jr., et al. vs. City of Chandler, et al.**

Move City Council approve the payment of the balance of its self-insured retention, in an amount up to $1,100,000 toward the full and final settlement of all claims against the city defendants in the matter of Andres Ramirez, Jr., et al. vs. City of Chandler, et al., CV2022-008776, without admitting liability, and to authorize the City Attorney to sign any necessary documents in such forms as are approved by the City Attorney to effectuate the terms and conditions of the settlement in this matter.

Council Focus Area(s):

Management Services

23. **New License Series 10, Beer and Wine Store Liquor License Application for Andrea Dahlman Lewkowitz, Agent, Fortune Foods Arizona, Inc, DBA Seafood City Supermarket**

    Move for recommendation to the State Department of Liquor Licenses and Control for approval of the State Liquor Job No. 354035, a Series 10, Beer and Wine Store Liquor License, for Andrea Dahlman Lewkowitz, Agent, Fortune Foods Arizona, Inc, DBA Seafood City Supermarket, located at 3177 W. Chandler Boulevard, Suite 200, and approval of the City of Chandler, Series 10, Beer and Wine Store Liquor License No. 310190.

    Council Focus Area(s):

24. **License Series 12, Restaurant Liquor License Application for Theresa June Morse, Agent, Best Pizza and Brew Chandler, LLC, DBA Best Pizza and Brew**

    Move for recommendation to the State Department of Liquor Licenses and Control for approval of the State Liquor Job No. 355787, a Series 12, Restaurant Liquor License, for Theresa June Morse, Agent, Best Pizza and Brew Chandler, LLC, DBA Best Pizza and Brew, located at 290 S. Arizona Avenue, Suite B, and approval of the City of Chandler, Series 12, Restaurant Liquor License No. 310254.

    Council Focus Area(s):

25. **New License Series 12, Restaurant Liquor License Application for Edgar Eduardo Cortez Gonzalez, Agent, Sol Azteca Mexican Kitchen, LLC, DBA Sol Azteca Mexican Kitchen**

    Move for recommendation to the State Department of Liquor Licenses and Control for approval of the State Liquor Job No. 334281, a Series 12, Restaurant Liquor License, for Edgar Eduardo Cortez Gonzalez, Agent, Sol Azteca Mexican Kitchen, LLC, DBA Sol Azteca Mexican Kitchen, located at 70 E. Riggs Road, Suite 3, and approval of the City of Chandler, Series 12, Restaurant Liquor License No. 310284.

Council Focus Area(s):

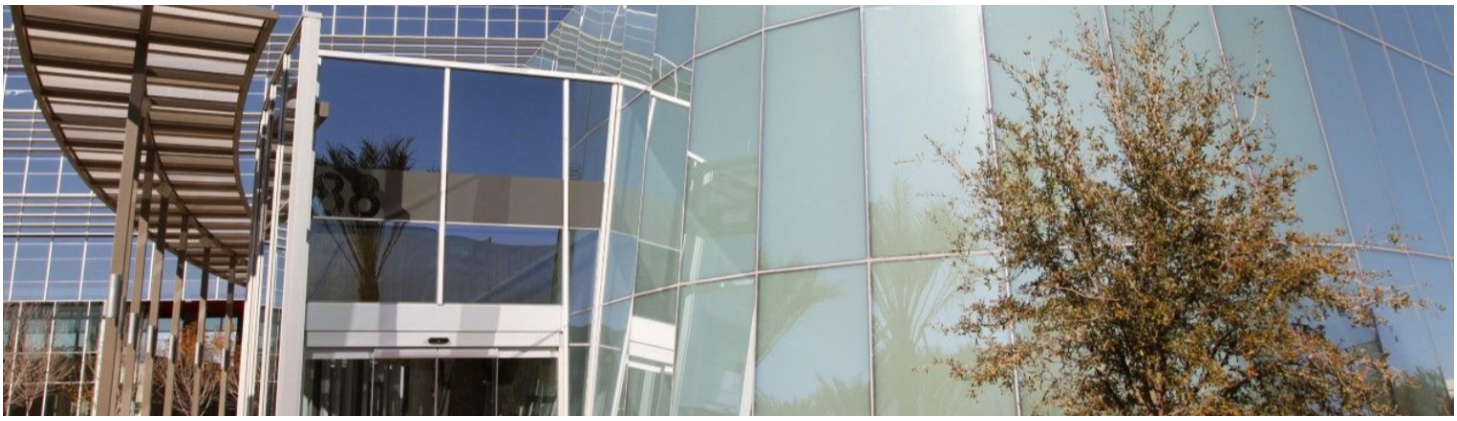

Mayor and Council

26. **Resolution No. 5937, Setting the 2026 City Council Regular Meeting Schedule**
Move City Council pass and adopt Resolution No. 5937, approving the 2026 City Council Regular Meeting Schedule.

Neighborhood Resources

27. **Approval of Hotel Agreements for Operation Open Door Non-Congregate Shelter Program - Extensions with GAJANAN, LLC ($450,000) and Metro Zona Hospitality, LLC ($525,000)**
Move City Council approve Agreement No. 4638, Amendment No. 2, with GAJANAN, LLC, in an amount not to exceed $450,000, for the term beginning October 1, 2025, through June 30, 2026, and Agreement No. 4758, Amendment No. 3, with Metro Zona Hospitality, LLC, in an amount not to exceed $525,000, for the term beginning July 1, 2025, through June 30, 2026.

Council Focus Area(s):

Police Department

28. **Resolution No. 5931 Intergovernmental Agreement Between Chandler PD and Maricopa County Regarding Sworn Officer and Detention Officer Training Academy**

Move City Council pass and adopt Resolution No. 5931 authorizing an Intergovernmental Agreement (IGA) with Maricopa County by and through the Maricopa County Sheriff's Office; authorizing the Mayor to sign the IGA; and authorizing the Chief of Police to administer, execute, and submit the Agreement and all documents and other necessary instruments in connection with such Agreement

Council Focus Area(s):

29. **Construction Manager at Risk (CMAR) Pre-Construction Services Agreement No. PD2301.251 with Willmeng Construction, Inc., for the Forensic Services Facility**

Move City Council award CMAR Pre-Construction Services Agreement No. PD2301.251 to Willmeng Construction, Inc., for the Forensic Services Facility, in an amount not to exceed $430,547.93.

Council Focus Area(s):

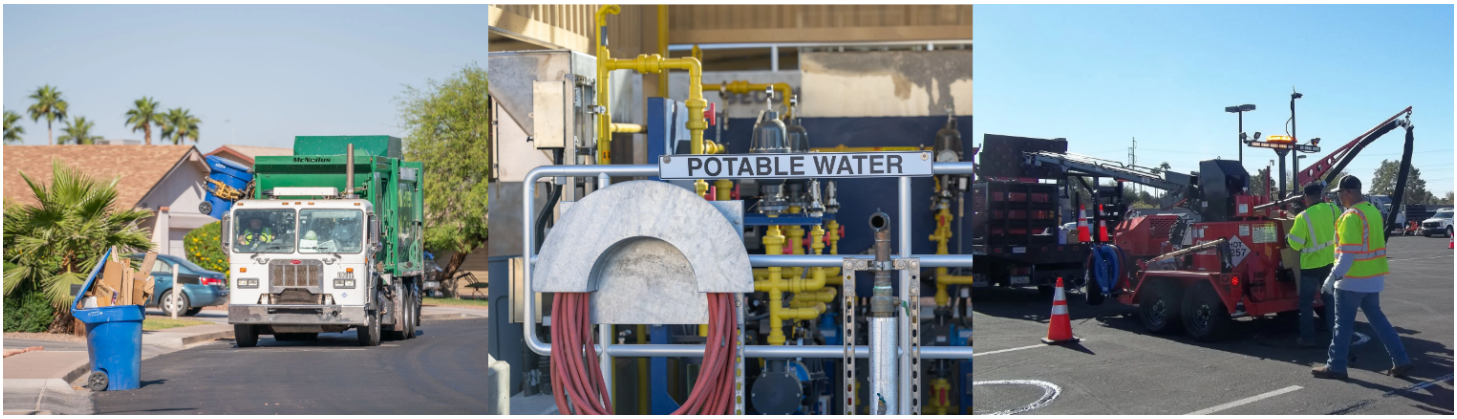

Public Works and Utilities

30. **Purchase of Refrigerated Liquid Carbon Dioxide**

Move City Council approve the purchase of refrigerated liquid carbon dioxide, from Reliant Gases, Ltd., utilizing City of Tempe Contract No. WUD22-135-02, in an amount not to exceed $570,000.

Council Focus Area(s):

31. **Agreement No. WW5-885-4923, with Carbon Activated Corp., for Purchase of Activated Carbon**

Move City Council approve Agreement No. WW5-885-4923, with Carbon Activated Corp., for the purchase of activated carbon, in an amount not to exceed $380,000, for a one-year term, September 25, 2025, through September 24, 2026, with the option of up to four one-year extensions.

Council Focus Area(s):

32. **Professional Services Agreement No. WW2402.451, with Wilson Engineers, LLC, for the 101/202 Redundant 66-inch Sewer Line Being Installed Under the Loop 202 Santan Freeway Approximately 1,800 Feet East of Price Road, Construction Management Services**

Move City Council award Professional Services Agreement No. WW2402.451, to Wilson Engineers, LLC, for the 101/202 Redundant 66-inch Sewer Line Construction Management Services, in an amount not to exceed $2,414,865.

Council Focus Area(s):

33. **Construction Manager at Risk Construction Services Agreement No. WW2402.401, with B&F Contracting, Inc., for the 101/202 Redundant 66-inch Sewer Line Being Installed Under the Loop 202 Santan Freeway Approximately 1,800 Feet East of Price Road**

Move City Council award CMAR Construction Services Agreement No. WW2402.401, to B&F Contracting, Inc., for the 101/202 Redundant 66-inch Sewer Line, in an amount not to exceed $34,649,463.94.

Council Focus Area(s):

34. **Sole Source Purchase of Analytical Equipment, Parts, and Services**

Move City Council approve the sole source purchase of analytical equipment, parts, and services, from Emerson LLP, in an amount not to exceed $325,000.

Council Focus Area(s):

35. **Agreement No. 4831, Amendment No. 1, with Tetra Tech, Inc., Paseo Vista Recreation Area and Landfill Environmental Consulting Services**

Move City Council approve Agreement No. 4831, Amendment No. 1, with Tetra Tech, Inc., Paseo Vista Recreation Area and landfill environmental consulting services, in an amount not to exceed $200,000, for a one-year period, October 1, 2025, through September 30, 2026.

Council Focus Area(s):

36. **Introduction and Tentative Adoption of Ordinance No. 5135 Granting a Non-Exclusive Power Distribution Easement to Salt River Project Agricultural Improvement and Power District, at No Cost, for Electrical Facilities Relocation Required as Part of the Lindsay Road Improvement Project from Ocotillo Road to Hunt Highway**

Move City Council introduce and tentatively adopt Ordinance No. 5135 granting a non-exclusive power distribution easement to SRP, at no cost, for electrical facilities relocation required as part of the Lindsay Road Improvement Project from Ocotillo Road to Hunt Highway.

Council Focus Area(s):

37. **Purchase of Streetlights, Signals, and Intelligent Transportation Systems Components**

Move City Council approve the purchase of streetlights, signals, and ITS components, from CS Construction, Inc., utilizing Town of Gilbert Contract No. 323000238, in an amount not to exceed $460,000.

Council Focus Area(s):

38. **Resolution No. 5923 Authorizing the Acquisition of Real Property in Fee or by Easement Required for the Cooper Road and Insite Way Loop Improvement Project ST2303**

Move City Council pass and adopt Resolution No. 5923 authorizing the acquisition of real property in fee or by easement required for the Cooper Road and Insite Way Improvement Project ST2303; authorizing the city's real estate administrator to sign, on behalf of the city, the purchase agreements, and any other documents necessary to facilitate these acquisitions; authorizing eminent domain proceedings as needed to acquire real property rights and obtain immediate possession thereof; and, relocation assistance as may be required by law.

Council Focus Area(s):

39. **Resolution No. 5924 Authorizing the Acquisition of Real Property in Fee or by Easement Required for the Hamilton Street and Armstrong Way Improvement Project ST2301**

Move City Council pass and adopt Resolution No. 5924 authorizing the acquisition of real property in fee or by easement required for the Hamilton Street and Armstrong Way Improvement Project ST2301; authorizing the city's real estate administrator to sign, on behalf of the city, the purchase agreement, and any other documents necessary to facilitate these acquisitions; authorizing eminent domain proceedings as needed to acquire the real property and obtain immediate possession thereof; and, relocation assistance as may be required by law.

Council Focus Area(s):

40. **Professional Services Agreement No. WW2206.451, Amendment No. 3, to Wilson Engineers, LLC, for the Reclaimed Water Conveyance Improvements for Long Lead Items for ASR Wells 11 and 12 Located on the Southeast Corner of Tumbleweed Park, Construction Management Services**

Move City Council award Professional Services Agreement No. WW2206.451, Amendment No. 3, to Wilson Engineers, LLC, for the Reclaimed Water Conveyance Improvements Construction Management Services, in the amount of $137,620, for a revised agreement amount not to exceed $1,656,390.

Council Focus Area(s):

41. **Construction Agreement No. WW2206.401, Change Order No. 3, with PCL Construction, Inc., for the Reclaimed Water Conveyance Improvements to Purchase Long Lead Items for ASR Wells 11 and 12 Located on the Southeast Corner of Tumbleweed Park**

Move City Council award Construction Agreement No. WW2206.401, Change Order No. 3, to PCL Construction, Inc., for the Reclaimed Water Conveyance Improvements, in the amount of $2,327,384.58, for a revised agreement amount not to exceed $15,909,279.58.

Council Focus Area(s):

42. **Purchase of Pavement Maintenance Materials**

Move City Council approve the purchase of pavement maintenance materials, from Pavement Restoration, Inc., utilizing Pinal County Contract No. 240328, in an amount not to exceed $470,037.

Council Focus Area(s):

43. **Agreement No. WW3-885-4614, Amendment No. 2, for Iron Salt for Odor & Corrosion Control**

Move City Council approve Agreement No. WW3-885-4614, Amendment No. 2, with US Peroxide LLC, dba USP Technologies, for iron salt for odor and corrosion control, in an amount not to exceed $600,000, for a one-year period, September 21, 2025, through September 20, 2026.

Council Focus Area(s):

44. **Construction Agreement No. WW2206.403, Change Order No. 1, with Revolution Industrial, LLC, for the Hamilton Street Reclaimed Water Transmission Main (Queen Creek Road to Ryan Road)**

Move City Council award Construction Agreement No. WW2206.403, Change Order No. 1, to Revolution Industrial, LLC, for the Hamilton Street Reclaimed Water Transmission Main (Queen Creek Road to Ryan Road), in the amount of $520,872.65, for a revised agreement amount not to exceed $6,420,957.38.

Council Focus Area(s):

Informational

45. **Special Event Liquor Licenses and Temporary and Permanent Extensions of Liquor License Premises Administratively Approved**

46. **Contracts and Agreements Administratively Approved, Month of August 2025**

Adjourn

City Council Memorandum City Clerk's Office Memo No. N/A

Date: September 15, 2025
To: Vice Mayor and City Council
From: Mayor Kevin Hartke
Subject: Boards and Commissions Member Appointments

Proposed Motion:
Move City Council approve the Board and Commission appointments as recommended.

Domestic Violence Commission
Appoint Megan Perez as primary
Appoint Aleshia Fessel as alternate

Background
The Domestic Violence Commission consists of eleven members. This membership includes five representatives of domestic violence service providers or other agencies working in the field. Each provider or agency having a representative serving as a member of the commission may submit the names of a primary and a secondary alternative representative to represent the provider or agency in the absence of the original representative.

Previously, Community Legal Services recommended and Council appointed Aleshia Fessel as a primary member, and Megan Perez as an alternate member. Ms. Fessel and Ms. Perez have requested that their roles be switched, with Ms. Perez serving as the primary member and Ms. Fessel serving as the alternate member.

City Council Memorandum **Government Relations & Transportation Policy** **Memo No.** TP26-01

Date: September 15, 2025
To: Mayor and Council
Thru: John Pombier, Acting City Manager
Ryan Peters, Deputy City Manager
Jason Crampton, Transportation Planning Manager
From: Hezequias Rocha, Transportation Planning Program Coordinator
Subject: Resolution No. 5932, Authorizing a Grant Agreement and the Acceptance of Grant Funds from the Federal Highway Administration in the amount of $560,000

Proposed Motion:

Move City Council pass and adopt Resolution No. 5932, authorizing a grant agreement and acceptance of grant funds from the U.S. Department of Transportation Federal Highway Administration Fiscal Year 2024 Safe Streets and Roads for All Grant Program in the amount of $560,000.

Background:

As part of the Bipartisan Infrastructure Law (BIL), $1.26 billion has been made available in the current federal fiscal year for projects to improve roadway safety by significantly reducing or eliminating roadway fatalities and serious injuries through safety action plan development focused on all roadway users.

In May 2024, the city council authorized staff to apply for up to $800,000 in federal funding through the Federal Highway Administration (FHWA) Fiscal Year 2024 Safe Streets and Roads for All (SS4A) Grant Program to develop a Roadway Safety Action Plan (RSAP). In Fall 2024, the city was awarded $560,000, requiring a $140,000 local match.

The RSAP will provide a comprehensive strategy to reduce roadway fatalities and serious injuries in Chandler, focusing on all modes of travel and vulnerable road users. The plan will include crash data analysis, community engagement, safety

strategies and built environment solutions to address high-risk areas, influence safer travel behavior, and create a safer, more accessible transportation network for all. Adoption of the RSAP will also make the City eligible to apply for future SS4A implementation funds for specific safety projects.

Discussion:

Following staff review of the grant agreement and at the direction of council, the city requested certain revisions to the amended grant agreement, including changes to the project description and certain general terms and conditions. The FHWA accepted the city's revisions to the project description but confirmed that changes to the general terms and conditions could not be accommodated because the language is standardized across all SS4A agreements.

The grant agreement with FHWA has now been finalized and is ready for execution. Upon council approval and signature, staff will begin work on the Roadway Safety Action Plan in coordination with the Roadway Safety Task Force and community stakeholders.

Staff recommends the approval of Resolution No. 5932, authorizing a grant agreement and acceptance of grant funds from the U.S. Department of Transportation Federal Highway Administration Fiscal Year 2024 Safe Streets and Roads for All Grant Program in the amount of $560,000.

Financial Implications:

The City will receive $560,000 in federal funds, with a required $140,000 local match from the General Fund. The match is included in the adopted FY 2025-26 budget.

Attachments

Resolution 5932

Grant Agreement

RESOLUTION NO. 5932

A RESOLUTION OF THE CITY COUNCIL OF THE CITY OF CHANDLER, ARIZONA, AUTHORIZING A GRANT AGREEMENT AND ACCEPTANCE OF GRANT FUNDS FROM THE U.S. DEPARTMENT OF TRANSPORTATION FEDERAL HIGHWAY ADMINISTRATION FISCAL YEAR 2024 SAFE STREETS AND ROADS FOR ALL GRANT PROGRAM IN THE AMOUNT OF $560,000.

WHEREAS, the U.S. Department of Transportation (USDOT) Safe Streets and Roads for All (SS4A) Program provides federal funding to support the development of a Roadway Safety Action Plan (RSAP) and Demonstration Activities; and

WHEREAS, the RSAP is a comprehensive strategy aimed at reducing and eliminating roadway serious-injury and fatal crashes and will inform Chandler's potential design, infrastructure, education, enforcement, and traffic control modification strategies to improve safety for all road users.

WHEREAS, in May of 2024, Council passed and adopted Resolution 5802, which authorized the City of Chandler's Transportation Planning staff to apply for and accept an SS4A grant of up to $800,000 in federal funding for the above-stated projects; and

WHEREAS, the City of Chandler was awarded $560,000, requiring a local match of $140,000; and

WHEREAS, in May of 2025, USDOT amended the terms and conditions of its grant agreement to incorporate new required terms and conditions.

NOW, THEREFORE BE IT RESOLVED by the City Council of the City of Chandler, Arizona, as follows:

Section 1. Authorizing the City Manager or his designee(s) to execute the amended grant agreement attached as Exhibit "A" to this Resolution, and take such actions as necessary to comply with the terms of the grant and perform all acts necessary to give effect to this Resolution.

Section 2. Authorizing the acceptance of the SS4A grant funds up to the maximum amount awarded and authorizing the contribution of City of Chandler funds in the amount of $140,000.

PASSED AND ADOPTED by the Council of the City of Chandler, Arizona, this _____ day of September, 2025.

ATTEST:

_____	_____
CITY CLERK	**MAYOR**

CERTIFICATION

I HEREBY CERTIFY that the foregoing Resolution No. 5932 was duly passed and adopted by the Council of the City of Chandler, Arizona, at a regular meeting held on the ___ day of September, 2025 and that a quorum was present thereat.

_____
CITY CLERK

APPROVED AS TO FORM:

_____
CITY ATTORNEY

1. Federal Award No.

2. Effective Date
See No. 16 Below

3. Assistance Listings No.
20.939

4. Award To
City of Chandler, Arizona
175 S Arizona AVE
Chandler, Arizona
85225-7526

Unique Entity Id.: LCLUQVAP1WU4
TIN No.: 866000238

5. Sponsoring Office
U.S. Department of Transportation
Federal Highway Administration
Office of Safety
1200 New Jersey Avenue, SE
HSSA-1, Mail Drop E71-117
Washington, DC 20590

6. Period of Performance
Effective Date of Award – 36 Months

7. Total Amount

Federal Share:	$560,000
Recipient Share:	$140,000
Other Federal Funds:	$0
Other Funds:	$0
Total:	$700,000

8. Type of Agreement
Grant

9. Authority
Section 24112 of the Infrastructure Investment and Jobs Act (IIJA, Pub. L. 117–58, November 15, 2021)

10. Procurement Request No.
HSA250230PR

11. Federal Funds Obligated
$560,000

12. Submit Payment Requests To
See Article 5.

13. Accounting and Appropriations Data
[insert Data]

14. Description of the Project
The City of Chandler seeks to develop a Roadway Safety Action Plan aimed at reducing traffic-related fatalities and injuries, and enhancing multimodal safety.

RECIPIENT

15. Signature of Person Authorized to Sign

Signature Date
Name: Dawn Lang
Title: Chief Financial Officer

FEDERAL HIGHWAY ADMINISTRATION

16. Signature of Agreement Officer

Signature Date
Name:
Title: Agreement Officer

U.S. DEPARTMENT OF TRANSPORTATION

GRANT AGREEMENT UNDER THE FISCAL YEAR 2024 SAFE STREETS AND ROADS FOR ALL GRANT PROGRAM

This agreement is between the United States Department of Transportation's (the "**USDOT**") Federal Highway Administration (the "**FHWA**") and the City of Chandler (the "**Recipient**").

This agreement reflects the selection of the Recipient to receive a Safe Streets and Roads for All ("**SS4A**") Grant for the City of Chandler Roadway Safety Action Plan.

The parties therefore agree to the following:

ARTICLE 1
GENERAL TERMS AND CONDITIONS

1.1 General Terms and Conditions.

(a) In this agreement, "**General Terms and Conditions**" means the content of the document titled "General Terms and Conditions Under the Fiscal Year 2024 Safe Streets and Roads for All ("SS4A") Grant Program," dated March 17, 2025, which is available at https://www.transportation.gov/grants/ss4a/grant-agreements under "Fiscal Year 2024." Articles 7–30 are in the General Terms and Conditions. The General Terms and Conditions are part of this agreement.

(b) The Recipient acknowledges that it has knowledge of the General Terms and Conditions. Recipient also states that it is required to comply with all applicable Federal laws and regulations including, but not limited to, the Uniform Administrative Requirements, Cost Principles, and Audit Requirements for Federal Awards (2 CFR part 200); National Environmental Policy Act (NEPA) (42 U.S.C. § 4321 et seq.); and Build America, Buy America Act (IIJA, div. G §§ 70901-27).

(c) The Recipient acknowledges that the General Terms and Conditions impose obligations on the Recipient and that the Recipient's non-compliance with the General Terms and Conditions may result in remedial action, termination of the SS4A Grant, disallowing costs incurred for the Project, requiring the Recipient to refund to the FHWA the SS4A Grant, and reporting the non-compliance in the Federal-government-wide integrity and performance system.

ARTICLE 2
APPLICATION, PROJECT, AND AWARD

2.1 Application.

Application Title: City of Chandler Roadway Safety Action Plan.

Application Date: 05/16/2024

2.2 Award Amount.

SS4A Grant Amount: $560,000

2.3 Federal Obligation Information.

Federal Obligation Type: Single

2.4 Budget Period.

Budget Period: See Block 6 of Page 1

2.5 Grant Designation.

Designation: Planning and Demonstration

ARTICLE 3
SUMMARY PROJECT INFORMATION

3.1 Summary of Project's Statement of Work.

Planning and Demonstration Narrative:

The City of Chandler seeks, through the Safe Streets for All grant program, to develop a plan that aims to address the rate of traffic-related fatalities and serious injuries by identifying key areas for safety improvements, adjusting traffic controls, and crafting effective education and enforcement strategies. The urgency of this plan is underscored by crash statistics that show recent increase in crashes, injuries and deaths post-pandemic.

The project will be completed in one phase.

3.2 Project's Estimated Schedule.

Action Plan Schedule

Milestone	Schedule Date
Planned Final Plan Publicly Available Date:	December 3, 2027
Planned SS4A Final Report Date:	January 14, 2028

3.3 Project's Estimated Costs.

(a) Eligible Project Costs

Eligible Project Costs	
SS4A Grant Amount:	$560,000
Other Federal Funds:	$0
State Funds:	$0
Local Funds:	$140,000
In-Kind Match:	$0
Other Funds:	$0
Total Eligible Project Cost:	$700,000

(b) Reserved

(c) Indirect Costs

Indirect costs are allowable under this Agreement in accordance with 2 CFR part 200 and the Recipient's approved Budget Application. In the event the Recipient's indirect cost rate changes, the Recipient will notify FHWA of the planned adjustment and provide supporting documentation for such adjustment. This Indirect Cost provision does not operate to waive the limitations on Federal funding provided in this document. The Recipient's indirect costs are allowable only insofar as they do not cause the Recipient to exceed the total obligated funding.

ARTICLE 4

CONTACT INFORMATION

4.1 Recipient Contact(s).

Hezequias Rocha
Transportation Planning Program Coordinator
City of Chandler
175 S Arizona Ave, Chandler, AZ 85225
480-782-3440
Hezequias.rocha@chandleraz.gov

4.2 Recipient Key Personnel.

Name	Title or Position
Jason Crampton	Transportation Planning Manager
Alyssa Siqueiros	Construction/Design Program Manager

4.3 USDOT Project Contact(s).

Safe Streets and Roads for All Program Manager
Federal Highway Administration

Office of Safety
HSSA-1, Mail Stop: E71-117
1200 New Jersey Avenue, S.E.
Washington, DC 20590
202-366-2822
SS4A.FHWA@dot.gov

and

Agreement Officer (AO)
Federal Highway Administration
Office of Acquisition and Grants Management
HCFA-42, Mail Stop E62-310
1200 New Jersey Avenue, S.E.
Washington, DC 20590
202-493-2402
HCFASS4A@dot.gov

and

Division Administrator – Arizona
Agreement Officer's Representative (AOR)
4000 N. Central Ave. Suite 1500
602-379-3646
Arizona.fhwa@dot.gov

and

Glen Robison
Arizona Division Office Lead Point of Contact
Safety Specialist
4000 N. Central Ave. Suite 1500
602-382-8961
glen.robison@dot.gov

ARTICLE 5
USDOT ADMINISTRATIVE INFORMATION

5.1 Office for Subaward and Contract Authorization.

USDOT Office for Subaward and Contract Authorization: FHWA Office of Acquisition and Grants Management

SUBAWARDS AND CONTRACTS APPROVAL

Note: See 2 CFR § 200.331, Subrecipient and contractor determinations, for definitions of subrecipient (who is awarded a subaward) versus contractor (who is awarded a contract).

Note: Recipients with a procurement system deemed approved and accepted by the Government or by the Agreement Officer (the "AO") are exempt from the requirements of this clause. See 2 CFR 200.317 through 200.327.

In accordance with 2 CFR 200.308(f)(6), the recipient or subrecipient shall obtain prior written approval from the USDOT agreement officer for the subaward, if the subaward activities were not proposed in the application or approved in the Federal award. This provision is in accordance with 2 CFR 200.308 (f)(6) and does not apply to procurement transactions for goods and services. Approval will be issued through written notification from the AO or a formal amendment to the Agreement.

The following subawards and contracts are currently approved under the Agreement by the AO. This list does not include supplies, material, equipment, or general support services which are exempt from the pre-approval requirements of this clause.

5.2 Reimbursement Requests

(a) The Recipient may request reimbursement of costs incurred within the budget period of this agreement if those costs do not exceed the amount of funds obligated and are allowable under the applicable cost provisions of 2 C.F.R. Part 200, Subpart E. The Recipient shall not request reimbursement more frequently than monthly.

(b) The Recipient shall use the DELPHI iSupplier System to submit requests for reimbursement to the payment office. When requesting reimbursement of costs incurred or credit for cost share incurred, the Recipient shall electronically submit supporting cost detail with the SF-270 (Request for Advance or Reimbursement) or SF-271 (Outlay Report and Request for Reimbursement for Construction Programs) to clearly document all costs incurred.

(c) The Recipient's supporting cost detail shall include a detailed breakout of all costs incurred, including direct labor, indirect costs, other direct costs, travel, etc., and the Recipient shall identify the Federal share and the Recipient's share of costs. If the Recipient does not provide sufficient detail in a request for reimbursement, the Agreement Officer's Representative (the "**AOR**") may withhold processing that request until the Recipient provides sufficient detail.

(d) The USDOT shall not reimburse costs unless the AOR reviews and approves the costs to ensure that progress on this agreement is sufficient to substantiate payment.

(e) In the rare instance the Recipient is unable to receive electronic funds transfers (EFT), payment by EFT would impose a hardship on the Recipient because of their inability to manage an account at a financial institution, and/or the Recipient is unable to use the DELPHI iSupplier System to submit their requests for disbursement, the FHWA may waive the requirement that the Recipient use the DELPHI iSupplier System. The Recipient shall contact the Division Office Lead Point of Contact for instructions on and requirements related to pursuing a waiver.

(f) The requirements set forth in these terms and conditions supersede previous financial invoicing requirements for Recipients.

ARTICLE 6
SPECIAL GRANT TERMS

6.1 SS4A funds must be expended within five years after the grant agreement is executed and DOT obligates the funds, which is the budget period end date in section 10.3 of the Terms and Conditions and section 2.4 in this agreement.

6.2 The Recipient demonstrates compliance with civil rights obligations and nondiscrimination laws, including Titles VI of the Civil Rights Act of 1964, the Americans with Disabilities Act (ADA), and Section 504 of the Rehabilitation Act, and accompanying regulations. Recipients of Federal transportation funding will also be required to comply fully with regulations and guidance for the ADA, Title VI of the Civil Rights Act of 1964, Section 504 of the Rehabilitation Act of 1973, and all other civil rights requirements.

6.3 SS4A Funds will be allocated to the Recipient and made available to the Recipient in accordance with FHWA procedures.

6.4 The Recipient of a Planning and Demonstration Grant acknowledges that the City of Chandler Roadway Safety Action Plan will be made publicly available and agrees that it will publish the final Action Plan on a publicly available website.

6.5 There are no other special grant requirements.

ATTACHMENT A
PERFORMANCE MEASUREMENT INFORMATION

Study Area: Within the boundaries of the City of Chandler Municipal Planning area.

Table 1: Performance Measure Table

Measure	Category and Description	Measurement Frequency and Reporting Deadline
Costs	Project Costs: Quantification of the cost of each eligible project carried out using the grant	Within 120 days after the end of the period of performance
Lessons Learned and Recommendations	Lessons Learned and Recommendations: Description of lessons learned and any recommendations relating to future projects or strategies to prevent death and serious injury on roads and streets.	Within 120 days after the end of the period of performance

ATTACHMENT B
CHANGES FROM APPLICATION

Describe all material differences between the scope, schedule, and budget described in the application and the scope, schedule, and budget described in Article 3. The purpose of Attachment B is to clearly and accurately document any differences in scope, schedule, and budget to establish the parties' knowledge and acceptance of those differences. See Article 11 for the Statement of Work, Schedule, and Budget Changes. If there are no changes, please insert "N/A" after "Scope," "Schedule," or "Budget." If there are changes to the budget, please complete the table below. Otherwise, leave the table below blank.

Scope: The original grant application included both planning and demonstration activities; however, as only the requested planning funds were awarded, all demonstration activities have been excluded from the scope of work.

Schedule: N/A

Budget: The original grant application included funding for both planning and demonstration activities; however, as only the requested planning funds were awarded, all demonstration activities funding have been excluded from the project budget with the original and current funding amount described below.

The table below provides a summary comparison of the project budget.

	Application		**Section 3.3**	
Fund Source	$	%	$	%
Previously Incurred Costs (Non-Eligible Project Costs)				
Federal Funds				
Non-Federal Funds				
Total Previously Incurred Costs				
Future Eligible Project Costs				
SS4AFunds	$800,000	80%	$560,000	80%
Other Federal Funds				
Non-Federal Funds	$200,000	20%	$140,000	20%
Total Future Eligible Project Costs	$1,000,000	100%	$700,000	100%
Total Project Costs	$1,000,000	100%	$700,000	100%

ATTACHMENT C

[RESERVED]

ATTACHMENT D

[RESERVED]

ATTACHMENT E
LABOR AND WORKFORCE

1. Efforts to Support Good-Paying Jobs and Strong Labor Standards

The Recipient states that rows marked with "X" in the following table align with the application:

X	The Recipient or a project partner promotes robust job creation by supporting good-paying jobs directly related to the project with free and fair choice to join a union. *(Describe robust job creation and identify the good-paying jobs in the supporting narrative below.)*
	The Recipient or a project partner will invest in high-quality workforce training programs such as registered apprenticeship programs to recruit, train, and retain skilled workers, and implement policies such as targeted hiring preferences. *(Describe the training programs in the supporting narrative below.)*
	The Recipient or a project partner will partner with high-quality workforce development programs with supportive services to help train, place, and retain workers in good-paying jobs or registered apprenticeships including through the use of local and economic hiring preferences, linkage agreements with workforce programs, and proactive plans to prevent harassment. *(Describe the supportive services provided to trainees and employees, preferences, and policies in the supporting narrative below.)*
	The Recipient or a project partner will partner and engage with local unions or other worker-based organizations in the development and lifecycle of the project, including through evidence of project labor agreements and/or community benefit agreements. *(Describe the partnership or engagement with unions and/or other worker-based organizations and agreements in the supporting narrative below.)*
	The Recipient or a project partner will partner with communities or community groups to develop workforce strategies. *(Describe the partnership and workforce strategies in the supporting narrative below.)*
	The Recipient or a project partner has taken other actions related to the Project to create good-paying jobs with the free and fair choice to join a union and incorporate strong labor standards. *(Describe those actions in the supporting narrative below.)*
	The Recipient or a project partner has not yet taken actions related to the Project to create good-paying jobs with the free and fair choice to join a union and incorporate strong labor standards but, before beginning construction of the Project, will take relevant actions described in Attachment B. *(Identify the relevant actions from Attachment B in the supporting narrative below.)*
	The Recipient or a project partner has not taken actions related to the Project to improve good-paying jobs and strong labor standards and will not take those actions under this award.

2. Supporting Narrative.

All work for this Project will be conducted consistent with the recipient's hiring, employment, and procurement standards and thus support good-paying jobs. The Project will allow for free and fair choice to join a union, consistent with applicable law.

ATTACHMENT F
CRITICAL SECURITY INFRASTRUCTURE AND RESILIENCE

1. Efforts to strengthen the Security and Resilience of Critical Infrastructure against both Physical and Cyber Threats.

The Recipient states that rows marked with "X" in the following table are accurate:

	The Recipient demonstrates, prior to the signing of this agreement, effort to consider and address physical and cyber security risks relevant to the transportation mode and type and scale of the activities.
	The Recipient appropriately considered and addressed physical and cyber security and resilience in the planning, design and oversight of the project, as determined by the Department and the Department of Homeland Security.
	The Recipient complies with 2 CFR 200.216 and the prohibition on certain telecommunications and video surveillance services or equipment.

2. Supporting Narrative.

N/A – The scope of work for this project does not include the procurement of any information technology solution.

ATTACHMENT G

[RESERVED]

City Council Memorandum Government Relations & Transportation Policy Memo No.

Date: September 15, 2025
To: Mayor and Council
Thru: John M. Pombier, Acting City Manager
Ryan Peters, Deputy City Manager
From: Raslyn Sleet, Grants Program Manager
Subject: Resolution Resolution No. 5934 Authorizing the Submittal Pass-Through Indian Gaming Applications to Gila River Indian Community

---

Proposed Motion:

Move City Council pass and adopt Resolution No. 5934 authorizing the submittal of pass-through Indian Gaming Revenue Sharing Grant Applications of $20,000 from Si Se Puede Foundation for STEM Center Programming, $20,000 from the Chandler Cultural Foundation for Connect Kids Program, and $100,000 from Teen Lifeline for Crisis Services to the Gila River Indian Community

Background:

In 2002, a coalition of Arizona Indian tribes successfully obtained passage of Proposition 202, whereby the state was authorized to enter into gaming compacts with individual tribes. The compacts allowed for expanded tribal use of games and gaming devices as well as pari-mutuel wagering. In exchange, tribes agreed to share a portion of gaming revenues with the State and its counties, cities and towns. The law provides that 12 percent of tribal contributions pursuant to the compacts shall be contributed by Indian tribes to cities, towns and counties for government services that benefit the general public, including public safety, mitigation of gaming impacts and promotion of commerce and economic development. The Indian tribes have some discretion over how these contributions will be made, and each tribe has different application procedures that need to be observed to obtain funding. Additionally, it has become a common practice for cities to submit applications for such contributions on behalf of 501(c)(3) nonprofit organizations that are deemed to be providing government services that benefit the general public.

The City of Chandler for many years has submitted pass-through grant applications for numerous nonprofit organizations based on the interests of the City and its residents. The pass-through grant applicant must be a 501(c)(3) nonprofit organization with some nexus with the city and its residents.

“Si Se Puede! (Yes We Can!)” a movement created by Cesar Chavez to inspire underrepresented individuals to reach their goals, the Si Se Puede Foundation (SSPF) has served the community for 23 years. The organization has built community ties and advocated for underserved communities, initially through programs like Folklorico dance and soccer. In response to community feedback, they shifted their focus to extracurricular STEM education, leading to the establishment of the Si Se Puede Foundation STEM Center in Chandler, Arizona in 2021. Today, their mission is to bridge the Science, Technology, Engineering, and Math (STEM) divide in underserved populations in our communities to prepare them for the 21st century workforce. Their STEM Center also advances the City of Chandler’s interest in providing youth, especially those from low- to moderate-income families, access to high-quality youth programming. They provide youth a safe and productive out-of-school time environment where they can build academic skills and create a community of support.

Si Se Puede Foundation respectfully requests a $20,000 grant from Gila River Indian Community to advance STEM (Science, Technology, Engineering, Math) learning for 200 youth and young adults at our STEM Center in Chandler. Si Se Puede’s 5, 200 square-foot STEM Center offers free, hands-on STEM enrichment programming to middle school, high school, and college students, ages 9-23, supporting the next generation of innovators and leaders in STEM.

The Chandler Center for the Arts (CCA) was established in 1989 as a dynamic collaboration between the City of Chandler, Chandler Unified School District, and the community. Designed as a state-of-the-art performance venue, CCA has served as a hub for arts, culture, and entertainment, bringing world-class performances, local productions, and educational programs to the Greater Phoenix area. The mission of Chandler Center for the Arts is to inspire and connect the community through diverse and accessible artistic experiences. By providing high-quality performances, arts education, and community engagement initiatives, CCA fosters creativity, cultural appreciation, and lifelong learning.

The Connect Kids program initiative provides a diverse range of arts experiences through four key programs: Camp Kids, Theater Kids, Vision Kids, and Youth Arts Council. With increasing demand and the rapid growth of our programs, additional funding is essential to, expand classroom-based arts experiences by integrating

our artist residency programs into Title 1 schools and community centers, enhance access for an additional 300 students, ensuring that no child is turned away and with increasing demand and the rapid growth of their programs.

Teen Lifeline was founded in 1986 in response to a devastating wave of teen suicides in Arizona. For nearly 40 years, Teen Lifeline has provided free, 24/7, peer-to-peer crisis intervention and suicide prevention services. Teen Lifeline reaches more than 350,000 individuals statewide each year, responding to over 40,000 crisis calls and texts while working with more than 80 school districts to integrate suicide prevention into classrooms, policies, and public health initiatives.

Teen suicide hotline support will allow Teen Lifeline to expand our crisis services within schools and communities, meeting teens where they are before they reach a breaking point. Through suicide prevention workshops, school partnerships, and postvention support.

Financial Implications:

The City, by virtue of this Resolution, is acting as a financial conduit between the Gila River Indian Community and Si Se Puede Foundation, Chandler Cultural Foundation and Teen Lifeline and is in no way agreeing or obligating itself to monitor or report on the expenditure of any grant funding distributed to or on behalf of Si Se Puede Foundation, Chandler Cultural Foundation and Teen Lifeline, guarantee the accuracy, completeness or truthfulness of the information set forth in the application materials prepared by Si Se Puede Foundation, Chandler Cultural Foundation and Teen Lifeline, supervise or take any responsibility regarding the actions or activities undertaken by tSi Se Puede Foundation, Chandler Cultural Foundation and Teen Lifeline, or represent that Si Se Puede Foundation, Chandler Cultural Foundation and Teen Lifeline, either has, or does not have, other sources of funding relating to the intended use of grant funding set forth in this Resolution, including funding from grant applications made on behalf of Si Se Puede Foundation, Chandler Cultural Foundation and Teen Lifeline, to other Indian tribes. The City has up to 10 days to send the funds once received.

Attachments

Gila River Indian Community Resolution

Gila River Indian Community Grant Si Se Puede Foundation

Gila River Indian Community Grant Cultural Foundation

Gila River Indian Community Grant Teen Lifeline

RESOLUTION NO. 5934

A RESOLUTION OF THE CITY COUNCIL OF THE CITY OF CHANDLER, ARIZONA, AUTHORIZING THE SUBMITTAL OF APPLICATIONS FOR AND ACCEPTANCE OF INDIAN GAMING REVENUE SHARING GRANTS TO THE GILA RIVER INDIAN COMMUNITY ON BEHALF OF VARIOUS NONPROFIT ORGANIZATIONS SERVING THE RESIDENTS OF CHANDLER.

WHEREAS, pursuant to A.R.S. § 5-601.02, Indian tribes entering a tribal-state gaming compact shall contribute monies to "… cities, towns and counties … for government services that benefit the general public, including public safety, mitigation of impacts of gaming, and promotion of commerce and economic development"; and

WHEREAS, Indian tribes entering a tribal-state gaming compact have various grant application procedures for evaluating which cities, towns, and counties, and which government services, will receive gaming revenue sharing contributions pursuant to A.R.S. § 5-601.02; and

WHEREAS, it is common practice for cities to authorize the submission of grant applications for such Indian gaming revenue sharing grants on behalf of 501(c)(3) nonprofit organizations that are deemed to be providing government related services that benefit the public; and

WHEREAS, the following Arizona 501(c)(3) nonprofit corporations have requested that the City of Chandler authorize the submission of an application for such Indian gaming revenue sharing grant funding to the Gila River Indian Community on their behalf and in the following amounts and for the following purposes:

Chandler Si Se Puede Foundation	$ 20,000	STEM center programming
Chandler Cultural Foundation	$ 20,000	Connect Kids Program
Teen Lifeline	$100,000	crisis services

and

WHEREAS, the funding sought is for the purpose of supporting programs that benefit the general public, including the citizens of Chandler, as further described in the application materials prepared by above nonprofits, which are incorporated by reference; and

WHEREAS, the City Manager's Office has reviewed the application materials and believes that the funding requests described in the application materials qualifies as being for government-related services that benefit the public and are consistent with the City's Administrative Regulation regarding such grant applications.

NOW, THEREFORE, BE IT RESOLVED by the City Council of the City of Chandler, Arizona, as follows:

Section 1. Authorizing Chandler Si Se Puede Foundation, Chandler Cultural Foundation, and Teen Lifeline to submit this resolution and the grant application materials prepared by them to the Gila River Community.

Section 2. Authorizing the Mayor or his designee to execute the application forms or letters in conjunction with the grant applications to be submitted to the Gila River Indian Community on behalf of the nonprofits listed in Section 1.

Section 3. Authorizing acceptance of the grants on behalf of the nonprofits listed in Section 1 in the amounts listed above or any other lesser or greater amount awarded and directing City staff to mail a check to each nonprofit within ten (10) days of the City's receipt of any grant funds from the Gila River Indian Community pursuant to a grant application submitted on behalf of them, covering one hundred percent (100%) of the funds received.

Section 4. The City, by virtue of this resolution, is simply acting as a financial conduit between the Gila River Indian Community and the nonprofits, and is in no way:

a. Agreeing or obligating itself to monitor or report on the expenditure of any grant funding distributed to or on behalf of any nonprofit; or

b. Guaranteeing or warranting the accuracy, completeness, or truthfulness of the information set forth in the application materials prepared by any nonprofit; or

c. Supervising or taking any responsibility regarding the actions or activities undertaken by any nonprofit; or

d. Representing that the nonprofits either have, or do not have, other sources of funding relating to the intended use of grant funding set forth in this resolution, including funding from grant applications made on behalf of any nonprofit to other Indian tribes.

PASSED AND ADOPTED by the City Council of the City of Chandler, Arizona, this _____ day of September, 2025.

ATTEST:

_____ _____

CITY CLERK MAYOR

CERTIFICATION

I HEREBY CERTIFY that the above and foregoing Resolution No. 5934 was duly passed and adopted by the City Council of the City of Chandler, Arizona, at a regular meeting held on the _____ day of September, 2025, and that a quorum was present thereat.

_____
CITY CLERK

APPROVED AS TO FORM:

_____
CITY ATTORNEY

Gila River Indian Community Grant Application
Grant Cycle 2025

Cover Sheet

Click field or use up/down arrow keys to move among fields

Municipality Information		
1. Date of Application: 2/21/2025		
2. Name of City, Town or County: City of Chandler		
3. Mayor (City or Town) or Board of Supervisor's Chairman (County): Kevin Hartke		
4. Mailing Address: 88 E Chicago St		
5. City: Chandler	**State:** Arizona	**Zip Code:** 85244
6. Acknowledgement of Submission by Authorized Municipality Representative: **Typed Name/Title:** Dawn Lang, Deputy City Manager|CFO **Email Address:** dawn.lang@chandleraz.gov	**Signature:** Dawn Lang	
Applicant Information		
7. Department/Organization Name: Si Se Puede Foundation		
8. Select Organization Type: 501c3 Non-Profit	**If Non-profit please attach IRS Determination Letter**	
9. Application Contact Person: Glen Pohle **Title:** Business Operations Director		
10. Phone Number: 480-710-7245		
11. Mailing Address: 3225 N Washington Street		
12. City: Chandler	**State:** Arizona	**Zip Code:** 85225
13. Email Address: grants@sisepuedefoundation.org	**Website Address:** https://www.sisepuedefoundation.org/	
Project Information		
14. Project Title: STEM Center Programming		
15. Purpose of Grant: Si Se Puede Foundation respectfully requests a $20,000 grant from Gila River Indian Community to advance STEM (Science, Technology, Engineering, Math) learning for 200 youth and young adults at our STEM Center in Chandler. Si Se Puede's 5,200 square-foot STEM Center offers free, hands-on STEM enrichment programming to middle school, high school, and college students, ages 9-23, supporting the next generation of innovators and leaders in STEM.		

16. Priority Funding Area	Education
17. Annual amount requested	$20,000
18. Number of years that funding is requested	1
19. Total amount requested (annual amount x number of years)	$20,000
20. Has your organization received past funding from GRIC? If yes, list each year and amount	No

For Office Use Only:		
Data Entry	Receipt	Evaluation
☐ Approval – Amount/Term		☐ Denial

21. Geographic area served	STEM Center Programming primarily serves our immediate community, encompassing Chandler, Gilbert, and Mesa in a 10-mile radius. That said, robotics teams throughout the state can access the STEM Center at no cost as SSPF is committed to enhancing the STEM ecosystem throughout all of Arizona.

Narrative

Please structure your proposal to provide the following information in the order indicated. Provide the narrative in paragraph form in the text field provided. Please be thorough but strive for brevity.

1. Briefly describe your organization's history, mission and goals.

Built upon the "Si Se Puede! (Yes We Can!)" a movement created by Cesar Chavez to inspire underrepresented individuals to reach their goals, the Si Se Puede Foundation (SSPF) has served the community for 23 years. The organization has built community ties and advocated for underserved communities, initially through programs like Folklorico dance and soccer. In response to community feedback, we shifted our focus to extracurricular STEM education, leading to the establishment of the Si Se Puede Foundation STEM Center in Chandler, Arizona in 2021. Today, our mission is to bridge the Science, Technology, Engineering, and Math (STEM) divide in underserved populations in our communities to prepare them for the 21st century workforce.

Since our founding, we have helped hundreds of local youth gain higher education and workforce readiness, while building their competence, self-confidence, and leadership skills in an inclusive, challenging, and creative environment. We have grown to serve 700 youth annually, and with the guidance of dedicated mentors, our students gain resilience and a passion for lifelong learning.

To fulfill our mission, SSPF provides free, year-round programming in our 5,200 square-foot STEM Center facility, which boasts a Fabrication Lab, 3D printers, Computer-Aided Design (CAD) computers and software, a video studio, and a classroom. At the facility, we offer students opportunities to explore STEM topics, including building, programming, and competing with robots. We also conduct STEM mobile outreach programming visiting community events throughout Arizona to get youth excited about STEM. Additionally, SSPF contributes to the broader STEM ecosystem by hosting two robotics competitions.

Through our STEM programs and outreach, SSPF aims to promote access to STEM enrichment, improve students' academic outcomes in STEM, and encourage post-secondary attainment and careers in these fields, especially for girls, youth of color, and youth from low-income backgrounds. As the demand for talent in STEM fields continues to grow, our programs will help students develop STEM workforce skills, preparing them to pursue fulfilling STEM careers.

2. To determine eligibility for this grant please select one item in the drop-down below.

   Non-Profit

   If Municipal, please go to number 3 below.

   If Non-Municipal or Non-profit, please describe how the services provided by your organization align with a government service of the supporting municipality. Explain how this project will support that service and describe the municipality's role in the project if applicable (beyond serving as a pass-through).

The Si Se Puede Foundation (SSPF) STEM Center is located in the City of Chandler and proudly serves 100 youth annually on site, most of which reside in Chandler and attend Chandler schools. SSPF's mission and actions towards the advancement of STEM education and resources align with the goals of the City of Chandler and the long-term economic development of the city. The City of Chandler is known for their commitment to innovation and is proud to be a part of the technology hub of the Southwest. In 2024, the City of Chandler was honored as one of the top ten Digital Cities survey award recipients by the Center for Digital Government (CDG). This survey honors innovative cities that use technology to tackle social challenges, enhance services, and more.

Si Se Puede Foundation is focused on enhancing innovation and technology education for underrepresented youth in order to grow the STEM ecosystem. As such, we enjoy opportunities to partner with the City of Chandler. Si Se Puede Foundation has been honored to participate in the Chandler Innovation Fair over the last 4 years, a celebration of the city's exploration of innovation, and its commitment to youth science education and technology.

Our STEM Center also advances the City of Chandler's interest in providing youth, especially those from low- to moderate-income families, access to high-quality youth programming. We provide youth a safe and productive out-of-school time environment where they can build academic skills and create a community of support. Our organization is proud to provide our services and to be aligned with the values and priorities of the City of Chandler. Our Desert WAVE women's college robotics team has been presented with certificates of recognition by the City of Chandler at city council meetings for placing first in US and third in world in 2019, for placing first in US and fourth in the world, and for placing first in the world in 2024. Degrees of Freedom, our high school robotics team, also received formal recognition from City of Chandler in this manner for qualifying to compete at the world FRC championships in 2024. In addition, City of Chandler recently highlighted Si Se Puede Foundation in their February 2025 State of the City address, which can be found here: https://www.youtube.com/watch?v=-KWkcWp1tbA&t=3362s

3. Describe the proposed project, objectives, and your plan to implement.

PROPOSAL OVERVIEW: Si Se Puede Foundation's 5,200 square-foot STEM Center offers free, hands-on STEM enrichment programming to middle school, high school, and college students. The Si Se Puede Foundation humbly requests a donation of $20,000 to advance STEM Center Programming for 100 East Valley youth, supporting the next generation of innovators and leaders in STEM.

OBJECTIVES AND PROJECT PLANS: SSPF strives to provide high quality STEM enrichment for youth from underrepresented backgrounds in STEM, including women, gender minority students, youth of color, and students from families with limited financial resources. By offering our programs free of charge, we are working to break down barriers to access and guarantee that every child, no matter their background, has the chance to explore, discover, and excel in STEM fields.

In our STEM Center, SSPF has the following unique spaces dedicated to different STEM skills and specialties:

- a MakerBot 3D Printing Certification Center, offering students and teachers a place to hone their 3D printing skills, as well as create custom parts to use in robots and other projects;

- a Creative Studio for filming and producing videos, including greenscreen, lighting and film equipment, and Computer Aided Drafting (CAD) computers and video editing software;
- a Classroom with ample storage space, large configurable worktables, media presentation capabilities, and classroom laptops;
- and the Fab Lab, an open area room that features a range of manufacturing equipment with which students can produce unique pieces out of different materials, including wood and metal, and test their robots.

With the most cutting-edge technology at our facility, we offer the following STEM Center Programming:

COMPETITIVE STEM & ROBOTICS TEAMS: SSPF offers four competitive STEM and robotics teams, serving a total of approximately 75 youth ages 12-23 annually. Teams meet three to five times weekly at the STEM Center throughout the year. Our robotics teams are student-led and supported by volunteer mentors who provide instruction and support in a variety of areas, such as programming/coding, electrical engineering, circuits, mechanical engineering, metal manufacturing, project management, statistics, physics, and machine learning.

- Degrees of Freedom: Our Degrees of Freedom robotics team is proud to participate in the FIRST Robotics Competition (FRC), a premier STEM-based engineering program for high school students. Through FRC, our students experience excitement similar to top tier college athletics, while developing critical engineering, problem-solving, and teamwork skills. Degrees of Freedom is student-led and is supported by 10-12 mentors. This co-ed robotics team consists of 30 high school students from schools in the Chandler and Mesa public school districts that do not currently offer FRC Robotics programs. Students design and build robots for competition in annual regional and national FRC events.
- Desert WAVE: The Si Se Puede Foundation, in partnership with Arizona State University, supports an innovative robotics team to empower female engineering students, Desert WAVE (Women in Autonomous Vehicle Engineering). This program serves 15-20 college students annually, providing women majoring in engineering a unique opportunity to design, develop, and compete with autonomous underwater vehicles in RoboNation's prestigious International RoboSub Competition. By providing a platform for women to excel in engineering, we aim to inspire the broader community as our participants serve as role models for the next generation of women engineers.
- FIRST Tech Challenge teams Binary Bots Jr. and Da Geese of Freedom: Si Se Puede offers two FIRST Tech Challenge Teams for younger students in grades 7-9: Binary Bots Jr., a co-ed team, and Da Geese of Freedom, a team for girls and gender minority students. These are smaller teams that provide middle school students with an opportunity to collaboratively design and build a robot for participation in regional and national FIRST Tech Challenge competitions under the guidance of volunteer mentors. Our Tech Challenge teams help spark early interest in STEM, encouraging youth to explore STEM topics while building key academic and life skills.

SUPPORT FOR SCHOOL ROBOTICS TEAMS: With a goal to ensure all youth in our community have access to the resources they need to excel in STEM, the STEM Center is open to more than 50 schools, giving them access to the necessary technology and resources to run their own robotics programs out of our facility. If a school team has a teacher and students and a place to store their equipment, they can use the STEM Center to design and fabricate their robots. Beyond those that regularly access our facility, we also provide technical assistance to other competitive robotics teams through our "Beak Squad" comprised of mentors and students.

EDUCATOR ADVANCEMENT: We offer training and certifications to teachers utilizing the specialized equipment available at the STEM center. After completing the course, teachers receive a free 3D printer for their classroom, extending the learning experience to hundreds of students.

In addition to offering programming, the STEM Center serves as a community hub. Building on their common interests and goals, the students develop strong friendships with their peers and connections with the adult mentors and coaches. We support their aspirations by offering college planning courses and even a limited number of scholarships. Beyond academics, youth also have fun planning social activities such as holiday parties, like our annual "Trunk or Treat" Halloween event, contributing to that sense of community. Students also learn to give back to their community through service projects, such as our initiative which modifies toy jeeps to make them fun and functional for youth living with limited mobility.

4. Describe how the proposed project satisfies one or more of the priority funding areas identified by the Gila River Indian Community.

Si Se Puede Foundation's STEM Center Programming fulfills the Gila River Indian Community priority funding areas of Economic Development and Education.

SSPF strives to provide equitable access to STEM education ensuring that youth from historically marginalized backgrounds gain the knowledge and skills needed to pursue higher education and enter the workforce prepared for 21st-century careers. By offering free, year-round STEM programming in a state-of-the-art facility, SSPF empowers students with hands-on experience in robotics, 3D printing, video production, and mechanical engineering, fostering both academic success and career readiness.

EDUCATION: SSPF enhances educational opportunities by providing experiential learning in STEM fields, addressing disparities in academic achievement, and fostering a love for learning. STEM Center Programming allows students to explore complex STEM concepts in an applied learning environment, enhancing problem-solving, teamwork, and critical thinking skills. Our robotics programs, including Degrees of Freedom and Desert WAVE, provide direct pathways to STEM careers by equipping students with the technical expertise and leadership experience necessary to succeed in post-secondary education and beyond.

ECONOMIC DEVELOPMENT: STEM education is a key driver of economic growth, and SSPF contributes to regional economic development by preparing a diverse, skilled workforce ready to meet the demands of Arizona's thriving technology sector. By fostering interest and proficiency in STEM fields, we help students build marketable skills that increase their employability in high-demand careers such as engineering, coding, and advanced manufacturing. These

skills promote and assist with employment, job readiness, economic security, and entrepreneurship. By removing financial barriers to STEM education and offering mentorship from professionals, SSPF ensures that all youth, regardless of socioeconomic status, have the opportunity to contribute to and benefit from Arizona's growing STEM economy.

A grant from the Gila River Indian Community will enable SSPF to continue its work of expanding educational equity and workforce development, ultimately strengthening the local economy by preparing the next generation of innovators, engineers, and community leaders.

5. Identify the needs/problems to be addressed, the target population and number of people to be served by the project.

Current research shows that students who participate in STEM enrichment demonstrate improved academic performance and are more likely to pursue STEM careers. However, many schools lack the staffing and funding to support high-quality STEM enrichment. According to the 2023 US News and World Report, Arizona has the highest teacher to student ratio in the nation—23.6 students per teacher, much higher than the national average of 15.9. The impact shows: only a quarter of Arizona students are testing proficient or higher in science, according to the Nation's Report Card. Out-of-school programs can supplement learning, but costs limit students' access, especially for students from families with limited financial resources.

Moreover, it is difficult for schools and out-of-school time programs alike to obtain and maintain the technology and equipment for robust STEM learning. In our East Valley community, there are currently more than 16,000 students from 13 schools that do not have access to STEM enrichment programs at their schools and lack access to hands-on extracurricular STEM programs like the FIRST Robotics Competitions (FRC). Despite being a rapidly growing area, Phoenix Metro lags significantly behind other areas of comparable size in the number of FRC teams. Michigan, with a population of 10 million and 1,870 high schools, boasts more than 600 FRC teams. In contrast, Arizona, with a population of 7 million and 1,003 high schools, has only around 40 FRC teams.

Si Se Puede's STEM Center works to address these gaps in access, helping to give East Valley youth the tools they need to succeed now and pursue bright futures. Through our STEM Center programming, Si Se Puede Foundation strives to create a supportive, safe, non-judgmental environment where all students can thrive, especially for underrepresented and underserved students who do not have access to quality STEM education. STEM Center Programming directly serves 100 youth and young adults (ages 12-23) on-site annually. Our students represent the highly diverse communities of the East Valley—81% of our Degrees of Freedom high school robotics team are students of color and the majority are underrepresented genders in STEM (43% female, 9.5% nonbinary, and less than 5% agender). All students attend schools that do not have a FIRST Robotics program. The Desert WAVE college program is a women's only team, and nearly 90% of the participants in Desert WAVE are women of color.

By offering students opportunities to explore STEM topics, including building, programming, and competing with robots, we help spark interest in STEM while fostering essential life skills such as teamwork, communication, and leadership. As the demand for talent in STEM fields continues to grow, our programs will help students develop STEM workforce skills, preparing them to pursue fulfilling STEM careers.

6. Define the project as a new or continuing program. Has GRIC previously funded this project?

This is a continuing program. The Si Se Puede Foundation STEM Center was established in 2021. Our STEM Center Programming has not been funded by the Gila River Indian Community before.

7. Provide a brief timeline including start and finish dates. Indicate if the timeline is flexible.

STEM Center Programming is offered year-round. Participants enroll in programming at the start of the school year in August 2025 and programming is ongoing throughout the school year and summer. The timeline for this program is less flexible as it must align with the school district calendar and the robotics competition schedules.

8. Identify other organizations, partners or funders participating in the project and their roles.

The STEM Center hosts robotics programming for approximately 13 schools in the Chandler Unified School District, Mesa Unified School District, and Gilbert Unified School District. Sponsors, such as MakerBot and Boeing, donate equipment and funding to our teacher training programming. We also receive grant funding from corporations and foundations to support our STEM Center Programming. While this is one of our first requests for FY26, we anticipate annual funders, such as Boeing, State Farm, onsemi, and others will support programming in the coming year.

9. Would you be able to implement the proposed plan if your organization received partial funding for this project?

Si Se Puede Foundation will be able to implement STEM Center Programming with partial funding. Less funding may impact our ability to secure the components and materials our teams need to construct competition-ready robots, as this is one of our highest cost budget items. However, we are committed to securing the funding necessary for students to participate in STEM Center programs free of charge. Full funding is necessary to support all of the various programs we run for different students at the STEM Center, but any level of funding will be deeply appreciated.

10. Describe your plan for project financial sustainability beyond the grant period. If this is a program/project previously funded by the Gila River Indian Community, describe efforts made towards the previously described sustainability plan.

Si Se Puede Foundation secures grants from a variety of corporate and foundation funders to sustain our programming. We are looking to expand this revenue stream in the coming year.

11. Describe your plan to document progress and results.

Si Se Puede Foundation collects and analyzes data to evaluate student engagement, STEM skills and knowledge, behavior and character in competition with their peers, and educational and career trajectories.

To measure success in achieving the above outcomes, Si Se Puede Foundation will:

- Track number of students served and student attendance to measure and evaluate our reach and participant engagement
- Conduct pre- and post-program surveys measuring students' self-assessments of STEM skills and knowledge gained while participating in a STEM Center program
- Observe and track student attitudes and behaviors during robotics and STEM competitions to measure growth in social, professional, and life skills
- Administer post-engagement surveys to track STEM Center participants' interest and engagement in STEM post-secondary education and careers long-term. The feedback our students share about their experiences in our STEM Center programs highlights the impact Si Se Puede's STEM Center enrichment has on their confidence and future paths.

About her time with Si Se Puede Foundation, Elizabeth Seaton said: "Si Se Puede has given me access to the magic of STEM and has caused me to fall in love with it…I feel more confident due to…like-minded peers and inspirational mentors who have guided me, encouraging me on my path of becoming a Controls System Engineer, which I wouldn't have even heard of without this program!"

We anticipate the following outcomes for FY26 STEM Center Programming:

- 80% of students will demonstrate engagement in STEM programs as measured by consistent attendance
- 100% of students will demonstrate increased knowledge about STEM topics and new STEM skills by program end, such as computer aided design (CAD), 3D printing, metal machining, electronics, and programming
- 100% of students will demonstrate improved teamwork, professionalism, sportsmanship, and critical thinking skills by the end of the program
- 90% of students will report increased interest in STEM careers and/or pursue degrees/careers in STEM fields

12. Indicate any application to and/or awards made by a tribe other than the Gila River Indian Community for state shared revenues for this and any other project for the past five (5) years.

    Si Se Puede Foundation has not received awards from another tribe.

Project Budget

Budget Period: Projected FY26 (July 1, 2025 – June 30, 2026)

For each budget item listed, please provide a narrative description on the following Project Budget Detail page.

Column 1	Column 2	Column 3	Column 4	Column 5
Proposed Budget Expense (list each budget item)	Amount requested from GRIC	Amount requested or secured from other sources	In Kind or matching contributions	Total Budget
1. Programs	$10,000	$124,000	$0	$134,000
2. Salaries and Payroll Tax	$5,000	$160,000	$0	$165,000
3. Rent	$2,000	$71,200	$0	$73,200
4. Utilities and Building Maintenance	$1,000	$11,000	$0	$12,000
5. Insurance	$0	$4,000	$0	$4,000
6. Office Supplies	$2,000	$13,000	$0	$15,000
7. Professional Fees	$0	$25,000	$0	$25,000
8. Printing & Advertising	$0	$5,000	$0	$5,000
9. Vehicle – Gas, Maintenance	$0	$3,000	$0	$3,000
10. AZ Unemployment Insurance Tax	$0	$3,300	$0	$3,3000
11. Click here to enter text.	$0	$0	$0	$0
12. Click here to enter text.	$0	$0	$0	$0
13. Click here to enter text.	$0	$0	$0	$0
14. Click here to enter text.	$0	$0	$0	$0
15. Click here to enter text.	$0	$0	$0	$0
Total Budget	$20,000	$419,500	$0	$439,500

Project Budget Detail

Please provide a narrative description for each of the project budget items listed on the previous page. Include the dollar figure and how it was attained.

1. Programs $134,000: Travel and robotics competition entry fees ($40,000); and supplies/materials/equipment/tools/spare parts/machinery for STEM Center Programming ($61,000), Scholarship program ($10,000), Beak Squad technical support ($3,000), National Underwater Robotics Competition ($10,000), workshops and toy hacks for disabled children ($10,000).

2. Salaries and Payroll Tax $165,000: 1 full-time and 4 part-time staff responsible for planning, coordinating, and facilitating STEM Center programs

3. Rent $73,200: Facility rent $6,100/month

4. Utilities and Building Maintenance $ 12,000: Utilities and maintenance for STEM Center facility

5. Insurance $4,000: non-profit liability insurance, business owner's insurance, worker's comp

6. Office Supplies $15,000: Printing supplies, cleaning supplies, building improvements, etc.

7. Professional Fees $25,000: Allocation of expense for professional accounting and grant writing services

8. Printing & Advertising $5,000: Marketing materials, publishing annual reports, publishing robotics teams' engineering notebooks, team apparel, and costs of outreach events.

9. Vehicle: gas and maintenance for SSPF's 15-passenger van and cargo trailer

10. AZ Unemployment Insurance Tax $3,300: required tax for state of AZ

11. Click here to enter text.

12. Click here to enter text.

13. Click here to enter text.

14. Click here to enter text.

15. Click here to enter text.

Other explanation: Click here to enter text.

To ensure a complete application and proper submission please refer to the Grant Application Instructions.

INTERNAL REVENUE SERVICE
P. O. BOX 2508
CINCINNATI, OH 45201

DEPARTMENT OF THE TREASURY

Date: JUL 01 2003

SI SE PUEDE FOUNDATION
PO BOX 24762
TEMPE, AZ 85285-4762

Employer Identification Number:
86-0922834
DLN:
17053088869093
Contact Person:
HERLEAN C YOUNCE ID# 31473
Contact Telephone Number:
(877) 829-5500
Public Charity Status:
170(b)(1)(A)(vi)

Dear Applicant:

Our letter dated February 2, 2000, stated you would be exempt from Federal income tax under section 501(c)(3) of the Internal Revenue Code, and you would be treated as a public charity during an advance ruling period.

Based on our records and on the information you submitted, we are pleased to confirm that you are exempt under section 501(c)(3) of the Code, and you are classified as a public charity under the Code section listed in the heading of this letter.

Publication 557, Tax-Exempt Status for Your Organization, provides detailed information about your rights and responsibilities as an exempt organization. You may request a copy by calling the toll-free number for forms, (800) 829-3676. Information is also available on our Internet Web Site at www.irs.gov.

If you have general questions about exempt organizations, please call our toll-free number shown in the heading between 8:00 a.m. - 6:30 p.m. Eastern time.

Please keep this letter in your permanent records.

Sincerely yours,

Lois G. Lerner

Lois G. Lerner
Director, Exempt Organizations
Rulings and Agreements

Gila River Indian Community Grant Application
Grant Cycle 2025

Cover Sheet

Click field or use up/down arrow keys to move among fields

Municipality Information		
1. Date of Application: 2/21/2025		
2. Name of City, Town or County: Chandler		
3. Mayor (City or Town) or Board of Supervisor's Chairman (County): Mayor Kevin Hartke		
4. Mailing Address: 175 S Arizona Ave		
5. City: Chandler	**State:** Arizona	**Zip Code:** 85225
6. Acknowledgement of Submission by Authorized Municipality Representative: **Typed Name/Title:** Dawn Lang, Depuy City Manaer|CFO **Email Address:** Dawn.lang@chandleraz.gov		**Signature:** Dawn Lang
Applicant Information		
7. Department/Organization Name: Chandler Cultural Foundation		
8. Select Organization Type: 501c3 Non-Profit	**If Non-profit please attach IRS Determination Letter**	
9. Application Contact Person: Sandra Bassett **Title:** Development & Communications Manager		
10. Phone Number: 480.782.2659		
11. Mailing Address: 250 N Arizona Avenue		
12. City: Chandler	**State:** Arizona	**Zip Code:** 85225
13. Email Address: sandra.bassett@chandleraz.gov	**Website Address:** chandlercenter.org	
Project Information		
14. Project Title: Connect Kids		
15. Purpose of Grant: To maintain and support our Connect Kids Youth Arts Education Proam at the Chandler Center for the Arts.		

16. Priority Funding Area	Education
17. Annual amount requested	$20,000
18. Number of years that funding is requested	1
19. Total amount requested (annual amount x number of years)	$20,000
20. Has your organization received past funding from GRIC? If yes, list each year and amount	2019: $10,000
21. Geographic area served	Valley Wide

For Office Use Only:		
Data Entry	Receipt	Evaluation
☐ Approval – Amount/Term		☐ Denial

Narrative

Please structure your proposal to provide the following information in the order indicated. Provide the narrative in paragraph form in the text field provided. Please be thorough but strive for brevity.

1. Briefly describe your organization's history, mission and goals.

The Chandler Center for the Arts (CCA) was established in 1989 as a dynamic collaboration between the City of Chandler, Chandler Unified School District, and the community. Designed as a state-of-the-art performance venue, CCA has served as a hub for arts, culture, and entertainment, bringing world-class performances, local productions, and educational programs to the Greater Phoenix area.

The mission of Chandler Center for the Arts is to inspire and connect the community through diverse and accessible artistic experiences. By providing high-quality performances, arts education, and community engagement initiatives, CCA fosters creativity, cultural appreciation, and lifelong learning.

The goals of CCA include:

- Presenting a broad range of performances that reflect the diversity of the community.
- Supporting arts education programs that enrich the lives of students and families.
- Cultivating partnerships with local artists, organizations, and businesses to strengthen the arts ecosystem.
- Enhancing community engagement through outreach initiatives and inclusive programming.
- Maintaining a welcoming, accessible, and innovative venue that serves as a cultural cornerstone for Chandler and beyond.

2. To determine eligibility for this grant please select one item in the drop-down below.

Non-Profit

If Municipal, please go to number 3 below.

If Non-Municipal or Non-profit, please describe how the services provided by your organization align with a government service of the supporting municipality. Explain how this project will support that service and describe the municipality's role in the project if applicable (beyond serving as a pass-through).

The **Connect Kids Program** will play a crucial role in advancing the **mission and sustainability** of the Chandler Center for the Arts while **leveraging the unique collaborative structure** of the Center's operational model.

Supporting the Nonprofit and the Chandler Center for the Arts

The Chandler Cultural Foundation, which oversees the Center's public programming, will directly benefit from Connect Kids and support the City of Chandler, by expanding its arts education initiatives, community outreach, and long-term sustainability. The program will:

Enhance Arts Education & Community Engagement

- The Chandler Center for the Arts already serves Chandler Unified School District (CUSD) students during the school week, providing access to 31 elementary, 10 middle, 6 high schools, and 3 alternative programs. Connect Kids will complement this model by offering additional arts programming during school intersessions, weekends, and summer months—periods when the Foundation controls programming.

  The program will ensure that youth beyond the CUSD system, including underserved students, homeschool groups, and community-based organizations, have equitable access to arts education at the Center.

3. Describe the proposed project, objectives, and your plan to implement.

The Chandler Cultural Foundation respectfully requests $20,000 to support and expand our Connecting Kids Youth Arts Education Program at the Chandler Center for the Arts. Connecting Kids provides immersive, hands-on arts education opportunities to youth ages 6-17, ensuring that all students—regardless of socioeconomic background—have access to high-quality arts experiences that inspire creativity, develop essential life skills, and cultivate a lifelong appreciation for the arts.

Each year, our youth programs reach more than 8,600 students, delivering low- or no-cost arts programming in visual and performing arts. With three of our four programs reaching 100% capacity annually, and our Theatre Kids program averaging 60% capacity, the demand for arts programming in Chandler is undeniable. Furthermore, 61% of participants in our Theatre Kids program come from Title 1 schools, emphasizing our role in providing equitable access to arts education.

The Connecting Kids initiative provides a diverse range of arts experiences through four key programs:

1. Camp Kids – provides immersive multi-disciplinary camps for youth ages 7-14, featuring sessions in theatre, dance, improvisation, and music. Camp Kids kicks off in June with five weeks of summer musical theater camp with two additional weeks of camps during school breaks. Classes are taught by skilled artists, musicians, actors, and arts instructors. Students wishing to expand on their camp experiences can seek paid internships under the camp's arts instructors. Although the camps are fee-based, we offer scholarships to mitigate financial barriers to participation.

2. Theatre Kids – Runs from September - May. The program introduces participants to the creativity and diversity of the arts and is facilitated by professional national touring musicians, dancers, and actors. Participation is free for Title 1 students, and we provide bus transportation with our partner Act One,A program that provides free

educational field trips to see professional arts performances, supplemented by in-school workshops and study guides.

3. Vision Kids – is a series of free, weekly visual arts classes that cover many aspects of visual arts, including painting, drawing, sculpture, and digital arts. Classes are taught by professional art instructors and are offered year-round every Saturday. All materials are provided free of charge. In addition to Vision Kids, we provide several visual arts engagement activities including cultural and family festivals, in-classroom workshops, and art gallery field trips.

4. Youth Arts Council – is a free, hands-on arts administration and leadership training program. Each year, from September to March, 15 rising artists and leaders ages 13-17 learn about Nonprofit Fundraising, Arts Management, Event Coordination, Marketing and Public Relations from local community members and organizations. Sessions are not only informative but also connect students with community experts. Participants gain practical skills they can apply directly to extracurriculars and future careers. The Youth Arts Council boasts over 190 alums.

Why This Grant Matters

With increasing demand and the rapid growth of our programs, additional funding is essential to:

- Expand classroom-based arts experiences by integrating our artist residency programs into Title 1 schools and community centers.
- Enhance access for an additional 300 students, ensuring that no child is turned away.
- Invest in necessary resources such as arts supplies, workshop materials, and professional artist stipends to continue offering free and low-cost arts experiences.

Connecting Kids is more than just an arts program—it is an investment in the future of Chandler's youth. Parents, teachers, and students repeatedly express that our programs have boosted self-esteem, confidence, leadership and social skills, equipping participants with the tools needed for both artistic and personal success.

Our holistic approach not only fosters artistic talent but also **builds critical skills in leadership, collaboration, and self-expression**.

4. Describe how the proposed project satisfies one or more of the priority funding areas identified by the Gila River Indian Community.

The Connect Kids Program aligns with the priority funding areas identified by the Gila River Indian Community by addressing critical areas such as education, youth services, and cultural preservation. Specifically, the program supports the following priorities:

1. Education and Youth Services – The Connect Kids Program provides youth with access to arts education, mentorship, and skill development opportunities that enhance their learning experiences. By engaging children

in artistic and creative activities, the program fosters critical thinking, problem-solving, and self-expression, contributing to their academic and personal growth.

2. Community Development and Engagement – Through structured programming and interactive activities, the Connect Kids Program encourages community involvement and provides a safe and supportive environment for youth. By integrating arts and cultural education, it helps strengthen family and community bonds while fostering leadership skills among young participants.

By meeting these funding priorities, the Connect Kids Program aligns with the Gila River Indian Community's commitment to supporting educational opportunities, enhancing youth engagement, and preserving cultural identity. This makes it an excellent candidate for funding consideration within their grant framework.

5. Identify the needs/problems to be addressed, the target population and number of people to be served by the project.

Arizona's education system faces significant challenges in providing equitable access to arts education. Many schools, particularly those in underserved and rural communities, lack sufficient funding for arts programs, leading to limited opportunities for students to engage in creative learning. According to Arizona Commission on the Arts, disparities in access to arts education disproportionately affect students in Title I schools and communities with higher percentages of economically disadvantaged families. Additionally, the Arizona Department of Education has recognized that arts integration enhances academic performance, critical thinking, and social-emotional development, yet many schools struggle to maintain consistent programming due to budget constraints.

The Connect Kids Program seeks to bridge this gap by providing high-quality arts education and creative engagement opportunities to students who might otherwise lack access. By offering hands-on experiences in visual arts, music, theater, and digital media, the program fosters creativity, problem-solving, and cultural appreciation, ensuring that children receive a well-rounded education that aligns with Arizona's academic standards.

Target Population

The Connect Kids Program is designed to serve youth in Arizona, with a focus on students from underfunded schools and community centers that lack robust arts education resources. Priority will be given to Title I schools, tribal communities, and low-income neighborhoods, where arts education is often minimal or absent. The program will be inclusive, serving children of diverse cultural and socioeconomic backgrounds, ensuring that all students, regardless of financial limitations, have access to quality arts programming.

Number of People to Be Served

The program aims to serve approximately 8,600 students annually through in-school workshops, after-school programs, community-based art events, and summer arts intensives. This includes direct instruction from professional teaching artists, access to free art supplies, and engagement with local arts institutions. Additionally, the program will provide opportunities for family participation and community showcases, further expanding its reach and impact beyond direct student engagement.

By addressing Arizona's arts education gap and providing meaningful creative experiences to hundreds of students each year, the Connect Kids Program will help enhance educational outcomes, foster self-expression, and contribute to a stronger arts ecosystem within the state.

6. Define the project as a new or continuing program. Has GRIC previously funded this project?

   Continuing, previously funded by GRIC in 2019

7. Provide a brief timeline including start and finish dates. Indicate if the timeline is flexible.

   Our Connect Kids program is a year long, continuous program that includes:
   THEATRE KIDS provides workshops and theater matinees to students and teachers from September to May.

   YOUTH ARTS COUNCIL is a hands-on arts administration and leadership training program. Each year, from September to March.

   CAMP KIDS provides immersive multi-disciplinary camps for youth ages 7-14, featuring sessions in theater, dance, improvisation, and music. Camp Kids kicks off in June with five weeks of summer musical theater camp with two additional weeks of camps during school breaks.

   VISION KIDS is a series of free, weekly visual arts classes that cover many aspects of visual arts, including painting, drawing, sculpture, and digital arts. Classes are taught by professional art instructors and are offered year-round every Saturday.

8. Identify other organizations, partners or funders participating in the project and their roles.

   Sponsors: Steena Murray, Kinder Morgan, Ruth McCormick Tankersley Trust
   Prtners: Chandler museum, Chander Unified School District, Act One, Arizona Commission on the Arts, Applied Material

9. Would you be able to implement the proposed plan if your organization received partial funding for this project?

   If we receive partial funding for this project, we will strategically adjust the scope and scale of the program to ensure its successful implementation. This may involve refining specific program components or reassessing

the cost structure for participation to maintain financial sustainability. Additionally, we remain committed to actively pursuing alternative grant opportunities to supplement any funding shortfall. By employing this dual approach—program adjustments and ongoing funding efforts—we will work to uphold the quality and objectives of the initiative while aligning with the available resources.

10. Describe your plan for project financial sustainability beyond the grant period. If this is a program/project previously funded by the Gila River Indian Community, describe efforts made towards the previously described sustainability plan.

The Connect Kids Program is committed to ensuring long-term financial sustainability beyond the grant period by implementing a diversified funding strategy, building strong community partnerships, and developing earned revenue opportunities. We seek private and corporate funding from the community to provide free and reduced cost programs to youth. Supporters include Kinder Morgan, Steena Murray, and the Ruth McCormick Tankersley Charitable Trust.

11. Describe your plan to document progress and results.

We evaluate our program through the following strategies:

- Participant Tracking: We document Connecting Kids attendance through a comprehensive registration process. We also track Title 1 school involvement for Theatre Kids student matinees.
- Feedback Collection: To continuously improve the program, we gather postprogram feedback through online surveys disseminated to educators and participants.
- Curriculum Alignment with State Arts Competencies: We align our program outcomes with Arizona's academic standards in the arts and social/emotional learning competencies.

12. Indicate any application to and/or awards made by a tribe other than the Gila River Indian Community for state shared revenues for this and any other project for the past five (5) years.

None

Project Budget

Budget Period: July 1, 2024 – June 30, 2025

For each budget item listed, please provide a narrative description on the following Project Budget Detail page.

Column 1	Column 2	Column 3	Column 4	Column 5
Proposed Budget Expense (list each budget item)	Amount requested from GRIC	Amount requested or secured from other sources	In Kind or matching contributions	Total Budget
1. Artist Fees	$20,000	$70,000	$0	$86,932
2. Instructor Fees	Click here to enter text.	$0	$0	$61,238
3. Administrative	Click here to enter text.	$0	$0	$25,806
4. Graphic Design/Marketing	$0	$0	$0	$2,500
5. Classroom Supplies/Materials	$	$2,500	$0	$7,500
6. Printing/Postage	$0	$0	$0	$1,000
7. Other Expenses Non-Classified	$0	$0	$0	$5,000
8. Click here to enter text.	$0	$0	$0	$0
9. Click here to enter text.	$0	$0	$0	$0
10. Click here to enter text.	$0	$0	$0	$0
11. Click here to enter text.	$0	$0	$0	$0
12. Click here to enter text.	$0	$0	$0	$0
13. Click here to enter text.	$0	$0	$0	$0
14. Click here to enter text.	$0	$0	$0	$0
15. Click here to enter text.	$0	$0	$0	$0
Total Budget	$20,000	$72,500	$0	$189,976

Project Budget Detail

Please provide a narrative description for each of the project budget items listed on the previous page. Include the dollar figure and how it was attained.

1. Artist Fees: Includes touring artists fees and local teaching artists and instructors

2. Instructor Fees: Theater Kids, Camp Kids, Youth Arts Council, Vision Kids Program Instructors

3. Administrative: 920 Hours billed at $28.05 per hour

4. Graphic Desing Marketing: flyers, program marketing materials

5. Classroom Supplies/Materials

6. Printing/Postage

7. Other Expenses Not Classified; ie Food, etc

8. Column 3: Grant/Sponsor Awards from Ruth McCormick Tankersly Foundation, Kinder Morgan, Applied Materials Foundation and City of Chandler Human Services Funding

9. Click here to enter text.

10. Click here to enter text.

11. Click here to enter text.

12. Click here to enter text.

13. Click here to enter text.

14. Click here to enter text.

15. Click here to enter text.

Other explanation: Click here to enter text.

To ensure a complete application and proper submission please refer to the Grant Application Instructions.

Internal Revenue Service
District Director

1100 COMMERCE STREET
DALLAS, TX 75242-0000

Department of the Treasury

Date: JUN 08 1989

Employer Identification Number:
74-2538528
Contact Person:
EO TECHNICAL ASSISTOR
Contact Telephone Number:
(214) 767-3526

CHANDLER CULTURAL FOUNDATION
25 SOUTH ARIZONA PLACE SUITE 301
CHANDLER, AZ 85225-5508

Accounting Period Ending:
June 30
Form 990 Required:
Yes
Addendum Applies:
No

Dear Applicant:

Based on information supplied, and assuming your operations will be as stated in your application for recognition of exemption, we have determined you are exempt from Federal income tax under section 501(a) of the Internal Revenue Code as an organization described in section 501(c)(3).

We have further determined that you are not a private foundation within the meaning of section 509(a) of the Code, because you are an organization described in section 509(a)(3).

If your sources of support, or your purposes, character, or method of operation change, please let us know so we can consider the effect of the change on your exempt status and foundation status. In the case of an amendment to your organizational document or bylaws, please send us a copy of the amended document or bylaws. Also, you should inform us of all changes in your name or address.

As of January 1, 1984, you are liable for taxes under the Federal Insurance Contributions Act (social security taxes) on remuneration of $100 or more you pay to each of your employees during a calendar year. You are not liable for the tax imposed under the Federal Unemployment Tax Act (FUTA).

Since you are not a private foundation, you are not subject to the excise taxes under Chapter 42 of the Code. However, you are not automatically exempt from other Federal excise taxes. If you have any questions about excise, employment, or other Federal taxes, please let us know.

Grantors and contributors may rely on this determination unless the Internal Revenue Service publishes notice to the contrary. However, if you lose your section 509(a)(3) status, a grantor or contributor may not rely on this determination if he or she was in part responsible for, or was aware of, the act or failure to act, or the substantial or material change on the part of the organization that resulted in your loss of such status, or if he or she acquired knowledge that the Internal Revenue Service had given notice that you would no longer be classified as a section 509(a)(3) organization.

Donors may deduct contributions to you as provided in section 170 of the Code. Bequests, legacies, devises, transfers, or gifts to you or for your use are deductible for Federal estate and gift tax purposes if they meet the applicable provisions of Code sections 2055, 2106, and 2522.

In the heading of this letter we have indicated whether you must file Form 990, Return of Organization Exempt From Income Tax. If Yes is indicated, you are required to file Form 990 only if your gross receipts each year are normally more than $25,000. If a return is required, it must be filed by the 15th day of the fifth month after the end of your annual accounting period. A penalty of $10 a day is charged when a return is filed late, unless there is reasonable cause for the delay. However, the maximum penalty charged cannot exceed $5,000 or 5 percent of your gross receipts for the year, whichever is less. This penalty may also be charged if a return is not complete, so please be sure your return is complete before you file it.

You are not required to file Federal income tax returns unless you are subject to the tax on unrelated business income under section 511 of the Code. If you are subject to this tax, you must file an income tax return on Form 990-T, Exempt Organization Business Income Tax Return. In this letter, we are not determining whether any of your present or proposed activities are unrelated trade or business as defined in section 513 of the Code.

You need an employer identification number even if you have no employees. If an employer identification number was not entered on your application, a number will be assigned to you and you will be advised of it. Please use that number on all returns you file and in all correspondence with the Internal Revenue Service.

Contribution deductions are allowable to donors only to the extent that their contributions are gifts, with no consideration received. Ticket purchases and similar payments in conjunction with fundraising events may not necessarily qualify as deductible contributions, depending on the circumstances. See Revenue Ruling 67-246, published in Cumulative Bulletin 1967-2, on page 104, which sets forth guidelines regarding the deductibility, as charitable contributions, of payments made by taxpayers for admission to or other participation in fundraising activities for charity.

If we have indicated in the heading of this letter that an addendum applies, the enclosed addendum is an integral part of this letter.

Because this letter could help resolve any questions about your exempt status and foundation status, you should keep it in your permanent records.

CHANDLER CULTURAL FOUNDATION

If you have any questions, please contact the person whose name and telephone number are shown in the heading of this letter.

Sincerely yours,

Gary O. Booth

Gary O. Booth
District Director

Gila River Indian Community Grant Application
Grant Cycle 2025

Cover Sheet

Click field or use up/down arrow keys to move among fields

Municipality Information		
1. Date of Application: 2/21/2025		
2. Name of City, Town or County: Chandler		
3. Mayor (City or Town) or Board of Supervisor's Chairman (County): Mayor Kevin Hartke		
4. Mailing Address: 175 S Arizona Avenue		
5. City: Chandler	**State:** Arizona	**Zip Code:** 85244
6. Acknowledgement of Submission by Authorized Municipality Representative: **Typed Name/Title:** Dawn Lang, Deputy City Manager CFO **Email Address:** dawn.lang@chandleraz.gov	**Signature:** Dawn Lang	
Applicant Information		
7. Department/Organization Name: Teen Lifeline		
8. Select Organization Type: 501c3 Non-Profit	**If Non-profit please attach IRS Determination Letter**	
9. Application Contact Person: Nikki Kontz	**Title:** Clinical Director	
10. Phone Number: 602-248-8337		
11. Mailing Address: PO Box 10745		
12. City: Phoenix	**State:** Arizona	**Zip Code:** 85064
13. Email Address: nikki@teenlifeline.org	**Website Address:** www.teenlifeline.org	
Project Information		
14. Project Title: Crisis Services		
15. Purpose of Grant: Click here to enter text.		

16. Priority Funding Area	Healthcare
17. Annual amount requested	$100,000
18. Number of years that funding is requested	1
19. Total amount requested (annual amount x number of years)	$100,000
20. Has your organization received past funding from GRIC? If yes, list each year and amount	no
21. Geographic area served	statewide

For Office Use Only:		
Data Entry	Receipt	Evaluation
☐ Approval – Amount/Term		☐ Denial

Narrative

Please structure your proposal to provide the following information in the order indicated. Provide the narrative in paragraph form in the text field provided. Please be thorough but strive for brevity.

1. Briefly describe your organization's history, mission and goals.

Teen Lifeline was founded in 1986 in response to a devastating wave of teen suicides in Arizona. After the airing of the ABC movie Surviving, which depicted a young person's death by suicide, mental health professionals, educators, and community leaders came together to create a resource where teens in crisis could talk to someone who understood—another teen. What emerged was Teen Lifeline, an organization dedicated to preventing teen suicide in Arizona through enhancing resiliency in youth and fostering supportive communities.

For nearly 40 years, Teen Lifeline has provided free, 24/7, peer-to-peer crisis intervention and suicide prevention services. Our confidential hotline, staffed by trained teen peer counselors under the supervision of master's-level clinicians, ensures that no young person faces a crisis alone. Beyond the hotline, we provide suicide prevention education in schools and postvention services for communities impacted by youth suicide, equipping families, educators, and youth-serving professionals with the tools to recognize warning signs and intervene before a tragedy occurs.

Teen Lifeline reaches more than 350,000 individuals statewide each year, responding to over 40,000 crisis calls and texts while working with more than 80 school districts to integrate suicide prevention into classrooms, policies, and public health initiatives. With this funding, we will expand our statewide crisis services, strengthening access to immediate emotional support, deepening partnerships with municipal and tribal agencies, and ensuring that historically underserved communities receive the resources they need.

2. To determine eligibility for this grant please select one item in the drop-down below.

Non-Profit

If Municipal, please go to number 3 below.

If Non-Municipal or Non-profit, please describe how the services provided by your organization align with a government service of the supporting municipality. Explain how this project will support that service and describe the municipality's role in the project if applicable (beyond serving as a pass-through).

Teen Lifeline's crisis intervention and suicide prevention services align with municipal public health and safety priorities by ensuring that no young person in Arizona faces a crisis alone. Suicide is the second leading cause of death for youth ages 10-24, and too many teens struggle in silence without knowing where to turn for help. Our free, confidential, and anonymous 24/7 crisis hotline ensures that every young person has immediate access to life-saving support, connecting them to trained peer counselors who understand what they are going through. This service not only provides a critical lifeline for youth in distress but also relieves the burden on emergency responders, schools, and municipal agencies by intervening before a crisis escalates to the need for law enforcement or hospitalization.

This project will strengthen both our hotline and direct crisis response efforts in communities across Arizona, ensuring that more teens, parents, and educators have access to the resources they need. With this funding, Teen Lifeline will increase our hotline's capacity, allowing us to answer more calls and texts, reduce wait times, and ensure that no teen seeking help is left unheard. Every day, we connect with youth who are struggling—feeling hopeless, alone, or afraid to reach out to an adult. By expanding our ability to respond, we are creating more connections of hope and ensuring that every young person has someone to turn to in their darkest moments.

Beyond the hotline, this funding will allow Teen Lifeline to expand our crisis services within schools and communities, meeting teens where they are before they reach a breaking point. Through suicide prevention workshops, school partnerships, and postvention support, we ensure that youth, educators, and parents have the knowledge and tools to recognize warning signs, start difficult conversations, and take action before tragedy occurs. Teen Lifeline already works closely with over 80 school districts, embedding suicide prevention into school culture and policies. This funding will allow us to expand that reach, build new partnerships, and make sure more students, teachers, and families have the skills to intervene when a young person is struggling.

Municipalities play a critical role in this work by ensuring that Teen Lifeline's resources are integrated into local crisis response systems, from school partnerships to law enforcement and public health initiatives. By

strengthening collaboration between Teen Lifeline and municipal agencies, this project will create a stronger, more connected safety net for Arizona's youth, ensuring that no teen struggling with mental health challenges is left without help.

3. Describe the proposed project, objectives, and your plan to implement.

Every part of this funding goes to strengthening Teen Lifeline's statewide crisis response, ensuring no teen in Arizona struggles alone. With this funding, we will expand both our crisis hotline operations and in-person crisis services, providing immediate, free, and confidential support to youth in distress while ensuring communities have the tools to prevent suicide before it happens.

Every year, tens of thousands of teens reach out to our hotline—some scared, some feeling hopeless, some in immediate crisis. This funding will allow us to increase hotline staffing by over 2,500 hours, ensuring more calls and texts are answered without delay, reducing wait times, and making sure that no teen seeking help is left unheard. With demand for crisis services growing, this expansion will strengthen the connections of hope that make Teen Lifeline a life-saving resource for Arizona's youth.

Beyond the hotline, this project will expand our in-person crisis response efforts, delivering over 5,000 suicide prevention workshops statewide. These workshops provide students, educators, and parents with the skills to recognize warning signs, start life-saving conversations, and connect struggling youth to immediate help. Too often, warning signs go unnoticed or teens feel like they have nowhere to turn. Through our School ID Initiative, which already reaches over 280,000 students in nearly 400 schools, we ensure that help is always within reach. This funding will allow us to expand this initiative and embed crisis resources more deeply into schools and communities.

With this investment, we will train and equip 80-100 new peer counselors, ensuring that more teens are prepared to support their peers in crisis. Every trained peer counselor is another connection of hope, another young person who can step in when a friend is struggling, another voice reminding Arizona teens that they are not alone.

Teen Lifeline's crisis services are completely free, confidential, and accessible to any teen who needs help, regardless of their background, income, or location. By strengthening our municipal and tribal partnerships,

this project will extend our reach into more rural and underserved communities, ensuring that every Arizona teen has someone to turn to, whenever they need it. With this funding, we will continue to build a future where no teen feels hopeless, no crisis goes unanswered, and no one is left without help.

4. Describe how the proposed project satisfies one or more of the priority funding areas identified by the Gila River Indian Community.

Teen Lifeline's proposed project strengthens public safety, healthcare, and education by ensuring that youth in crisis have immediate access to life-saving support and that communities are equipped to prevent suicide before tragedy occurs. Suicide is the second leading cause of death for youth ages 10-24 in Arizona, and too many young people struggle in silence without knowing where to turn. Our 24/7, free, and confidential crisis hotline ensures that every teen has a safe place to reach out, reducing the risk of self-harm and suicide while alleviating pressure on emergency responders. Expanding our crisis outreach and hotline capacity will allow more youth to connect with trained peer counselors before their struggles escalate into emergencies. This work is a critical part of Arizona's public safety network, ensuring that mental health crises do not go unnoticed or untreated.

Mental health is an essential component of overall well-being, and Teen Lifeline's services fill a critical gap in Arizona's healthcare system by providing immediate, accessible support. Our crisis hotline ensures that youth experiencing depression, anxiety, or suicidal ideation can talk to someone who understands, even when traditional mental health services are unavailable. In addition, we provide suicide prevention workshops in schools, training thousands of students, teachers, and parents to recognize warning signs and intervene before a crisis worsens. Expanding our reach will allow us to serve more youth, particularly in rural and tribal communities where access to mental health care remains limited. This investment will ensure that no teen is left without the support they need.

Education is central to our approach, with Teen Lifeline embedded in over 80 school districts through suicide prevention programming, school partnerships, and our School ID Initiative, which ensures students have access to crisis resources. Our workshops provide essential mental health education, teaching students how to recognize signs of distress in themselves and their peers, while equipping educators and parents with intervention strategies. With this funding, we will expand our prevention education to more schools and train 80-100 new peer counselors, strengthening the support network available to Arizona's youth. Teen Lifeline's

project is deeply aligned with the Gila River Indian Community's priority funding areas, enhancing public safety through crisis intervention, strengthening healthcare by expanding access to mental health resources, and advancing education by ensuring that schools are equipped to support students in crisis. This investment will allow us to expand our reach, deepen partnerships, and ensure that no Arizona teen struggles alone.

5. Identify the needs/problems to be addressed, the target population and number of people to be served by the project.

Every year, thousands of Arizona teens experience feelings of hopelessness, isolation, and distress, yet too many suffer in silence. For many, the barriers to seeking help—fear, stigma, lack of access to mental health care—leave them without support until it's too late. Suicide is the second leading cause of death for youth ages 10-24 in the state, a crisis that continues to escalate as the demand for services outpaces available resources. Teen Lifeline exists to ensure no young person has to face these struggles alone by providing immediate, free, and confidential crisis intervention while building a network of support that extends into schools, families, and communities.

This project will expand our reach to serve more youth, educators, and parents across Arizona, ensuring that crisis intervention and suicide prevention education are accessible where they are needed most. Our 24/7 hotline is a lifeline for teens experiencing distress, providing thousands of young people with someone to talk to in their most vulnerable moments. With this funding, we will increase hotline staffing by more than 2,500 hours, allowing us to answer more calls and texts, reduce wait times, and ensure that every teen who reaches out finds support on the other end. We anticipate answering more than 45,000 crisis contacts this year alone, offering a direct connection of hope to youth in need.

Beyond the hotline, this project will mobilize prevention specialists and expand outreach into schools and communities, creating environments where suicide prevention is embedded in everyday conversations. We will deliver over 5,000 suicide prevention workshops statewide, equipping students, teachers, and parents with the tools to recognize warning signs, provide immediate support, and connect youth to crisis resources before a situation escalates. Our School ID Initiative, already reaching nearly 400 schools and over 280,000 students, will continue to expand, ensuring that every student in Arizona has access to our crisis hotline anytime they need it.

This funding will also support the training of 80-100 new teen peer counselors, empowering young people to become leaders in suicide prevention by providing them with over 72 hours of specialized crisis intervention training. Every peer counselor trained strengthens the safety net for teens, reinforcing that support exists not just on the hotline but in their everyday lives.

Teen Lifeline has spent nearly four decades ensuring that no teen faces a crisis alone. This project will extend that impact, deepening our ability to respond in real-time to youth in distress, strengthening protective factors in schools and families, and reinforcing the message that help is always available and hope is never out of reach.

6. Define the project as a new or continuing program. Has GRIC previously funded this project?

Continuing program but not previously funded by GRIC.

7. Provide a brief timeline including start and finish dates. Indicate if the timeline is flexible.

This program is ongoing year round.

8. Identify other organizations, partners or funders participating in the project and their roles.

Teen Lifeline's partnerships with schools, healthcare providers, crisis organizations, and community coalitions are critical to ensuring that no teen in crisis is left without support. These collaborations allow us to expand crisis intervention, prevention, and postvention efforts, reaching more youth statewide and strengthening Arizona's mental health safety net. Our formal Memorandums of Understanding (MOUs) with over 30 school districts ensure that we can seamlessly provide crisis consultation, postvention support following student suicides, and prevention education tailored to the needs of students, educators, and families. These agreements embed suicide prevention directly into school systems, ensuring that when a crisis arises, Teen Lifeline is often the first call a school makes. By rapidly coordinating crisis response, stabilizing students, and preventing contagion after a suicide, we help schools navigate traumatic events while ensuring that no student is left unsupported.

Our School ID Initiative, which places Teen Lifeline's crisis hotline number on student IDs in over 350 schools statewide, ensures that students always know where to turn in moments of crisis. Developed in partnership with school districts and community stakeholders, this initiative has expanded as more schools recognize the importance of providing crisis resources directly to students. We have a proven track record of successful collaborations, working with over 194 unique schools, districts, and agencies, reinforcing our role as a trusted partner in youth suicide prevention. Every September, we collaborate with 35-45 schools to present suicide prevention

programs, educating thousands of students on the importance of seeking help and recognizing warning signs. In 2025, we plan to expand this reach, presenting at over 40 schools across five major school districts, ensuring that more students, educators, and families have access to critical life-saving education.

Beyond schools, Teen Lifeline's partnership with Solari Crisis & Human Services, which operates Arizona's 988 and crisis line system, ensures seamless coordination between our youth-focused hotline and the state's broader crisis response network. This collaboration allows youth experiencing crises that extend beyond peer-to-peer support—such as those needing mobile crisis teams or higher-level interventions—to be immediately connected to the appropriate care. Working alongside Solari ensures that Arizona's crisis response is comprehensive, meeting youth where they are and providing immediate, specialized care when needed.

Teen Lifeline is also an active member of the Arizona Suicide Prevention Coalition (AZSPC), which coordinates statewide suicide prevention strategies, shares best practices, and mobilizes resources for at-risk communities. Through AZSPC, we work alongside more than 50 suicide prevention organizations, behavioral health agencies, and public health professionals, ensuring that our crisis intervention and prevention efforts are aligned with the broader statewide strategy. AZSPC strengthens our ability to advocate for policy changes, integrate best practices into community initiatives, and expand outreach to historically underserved populations, ensuring that suicide prevention is prioritized at every level.

Our partnerships also extend to behavioral health providers, hospitals, and community organizations, ensuring that teens in crisis receive continued support beyond their initial call for help. Through Caring Contacts, Teen Lifeline provides follow-up support for youth discharged from psychiatric care, reducing the risk of suicide reattempts by ensuring that teens remain connected to resources, support systems, and trusted adults. These collaborations reinforce Teen Lifeline's commitment to building connections of hope that extend beyond a single crisis moment, ensuring that no young person has to navigate their struggles alone. By strengthening these partnerships, this project will expand our ability to provide immediate, life-saving crisis intervention while reinforcing long-term prevention strategies that empower communities to respond to youth in distress.

9. Would you be able to implement the proposed plan if your organization received partial funding for this project?

Yes, Teen Lifeline would implement this project even if partial funding were received, though the scope and scale of impact would be adjusted accordingly. Every dollar invested strengthens Arizona's crisis response network, expands suicide prevention education, and ensures that no teen in crisis is left without support. With reduced funding, we would prioritize core crisis intervention efforts, ensuring that our hotline remains fully operational and accessible statewide.

A partial award would still allow us to train additional peer counselors, increase hotline staffing hours, and expand community-based crisis services, but the number of new peer counselors trained, the volume of prevention workshops conducted, and the extent of outreach to underserved communities would be scaled accordingly. While our hotline remains a top priority, fewer funds would limit our ability to expand school-based prevention programming, integrate

crisis resources into additional districts, and grow postvention services for communities impacted by suicide.

Teen Lifeline has a proven track record of leveraging grant funding to secure additional resources, and if awarded partial funding, we would actively seek additional partnerships and support to maximize the project's reach. Regardless of the funding amount, we remain committed to ensuring that every Arizona teen in crisis has access to free, confidential, and immediate support, and we would implement this project at a level that ensures tangible, measurable impact in suicide prevention across the state.

10. Describe your plan for project financial sustainability beyond the grant period. If this is a program/project previously funded by the Gila River Indian Community, describe efforts made towards the previously described sustainability plan.

Teen Lifeline focuses heavily on the generation of funds through private giving. This grant would allow for the immediate expansion of the prevention programs. With increased exposure, Teen Lifeline will have an opportunity to bring in new supporters. Acquiring new corporate and individual donors will be key to sustainability. Additionally, Teen Lifeline will continue to focus on increasing donor giving through special events and fundraisers.

Teen Lifeline's Theory of Change is based upon the assertion that in order for youth to possess a sense of connection and hope for their future, they must be resilient themselves and as a community. Teen Lifeline's services increase protective factors to create resiliency in youth and communities to prevent teen suicide. Specifically, we focus on connection to individuals, family, community, and school; life skills (including problem-solving and coping skills, ability to adapt, emotion regulation); hope for the future—optimism; and awareness of and access to effective mental health care/peer counseling hotline.

11. Describe your plan to document progress and results.

Teen Lifeline operates with the understanding that every call, every crisis, and every moment of connection can mean the difference between life and death. Our evaluation process is not just about numbers—it is about ensuring that every young person who reaches out for help receives the highest-quality, life-saving support possible. Because the stakes are so high, we take an uncompromising approach to tracking, assessing, and refining our services, making sure that no teen in crisis is left without immediate, effective intervention.

Our hotline evaluation is built around real-time call tracking, analyzing trends in call volume, peak hours, and risk levels to ensure that we are meeting the needs of Arizona's youth as effectively as possible. Every call is documented with detailed assessments of crisis severity, safety planning, and referral outcomes, allowing us to measure not only how many teens we serve, but how many lives we save. We closely monitor caller-reported improvements in well-being, successful de-escalation rates, and connections to ongoing support, ensuring that every intervention has a meaningful and measurable impact.

In our prevention and postvention programs, we recognize that education and early intervention are key to preventing tragedy. Through pre- and post-surveys, school feedback, and ongoing data collection, we assess how well students, educators, and parents understand suicide risk factors, their confidence in responding to warning signs, and their likelihood to seek help or refer a peer to crisis resources. Because many suicides can be prevented with early recognition and intervention, we take this responsibility seriously—continuously refining our approach to make sure that the information we provide is clear, accessible, and truly prepares communities to take action before a crisis escalates.

Our peer counselor training evaluation is equally rigorous, ensuring that every teen who volunteers on the hotline is fully prepared to handle the weight of crisis intervention. Volunteers undergo 72+ hours of crisis training, continuous supervision, and real-time skill assessments to ensure they can navigate high-risk situations with confidence, empathy, and precision. We measure retention rates, call success metrics, and volunteer feedback to continuously improve training and ensure that the peer support model remains a gold standard for youth-led crisis intervention.

Postvention services are evaluated with the same level of urgency, as we recognize that schools and communities reeling from a suicide loss need immediate and effective stabilization to prevent further tragedies. We track response times, school engagement, and the effectiveness of stabilization efforts, ensuring that our support is comprehensive and that schools have the tools to prevent contagion and protect students from additional harm.

Because we deal with life-and-death situations, we cannot afford to get this wrong. Our evaluation process is not just about assessing impact—it is about constantly improving, constantly refining, and constantly making sure that no teen in Arizona feels alone in their darkest moments. Every lesson learned is applied immediately, ensuring that the services we provide are as effective, accessible, and life-saving as possible. Suicide prevention is not a passive effort—it requires vigilance, adaptation, and an unwavering commitment to ensuring that every call, every training, and every partnership strengthens the safety net for Arizona's youth.

12. Indicate any application to and/or awards made by a tribe other than the Gila River Indian Community for state shared revenues for this and any other project for the past five (5) years.

In 2024 we received $100,000 from Salr River Pima Maricopa Indian Community.

Project Budget

Budget Period: January through December 2025

For each budget item listed, please provide a narrative description on the following Project Budget Detail page.

Column 1	Column 2	Column 3	Column 4	Column 5
Proposed Budget Expense (list each budget item)	Amount requested from GRIC	Amount requested or secured from other sources	In Kind or matching contributions	Total Budget
1. Curriculum Development & Implementation/Trainings & Meetings	$1,112	$12,188	$0	$13,300
2. Dues/Subscriptions/ Publications	$2,308	$25,304	$0	$27,612
3. General Liability/D&O/Malpractice/ Outside Services	$1,435	$15,736	$0	$17,171
4. Peer-Related Expenses	$343	$3757	$0	$4,100
5. Public Relations/Outreach & Travel/Mileage	$1,855	$20,339	$0	$22,194
6. Staff Development/Seminars/ Conferences	$673	$7,381	$0	$8,054
7. Telephone/Communications	$1,764	$19,334	$0	$21,098
8. Building/Utilities/Equipment/ Misc.	$2,758	$30,227,41	$0	$32,985.41
9. Audit/Tax Prep/Bank Charges/ Payroll Processing	$1,871	$20505.50	$0	$22,376.50
10. Board of Directors	$355	$3894.5	$0	$4,249.50
11. Postage/Delivery/Printing/ Supplies	$1,060	$11,618.15	$0	$12,678.15
12. Director Salaries	$15,052	$164,998	$0	$180,050
13. Administrative Staff Salaries	$23,775	$260,612	$0	$284,387
14. Programmatic Staff Salaries	$31,941	$347,215	$0	$379,156
15. Taxes, Employer Match, & Personnel Benefits	$13,941	$152,823	$0	$166,764
Total Budget	$100,000	$1,096,175.56	$0	$1,196,175.56

Project Budget Detail

Please provide a narrative description for each of the project budget items listed on the previous page. Include the dollar figure and how it was attained.

1. Our organization is dedicated to empowering community members with the skills to identify risks and connect those in need with accessible resources. This expense covers the costs of training sessions and meetings designed to enhance these skills and provide crucial information on available resources.

2. This expense covers all costs related to publications and subscriptions essential for promoting Teen Lifeline's services and ensuring that the community is fully informed about the available resources.

3. This expense safeguards against injuries and damages arising from routine activities and events, as well as any errors or omissions in the professional services our nonprofit provides. Our organization relies on external services to efficiently manage daily operations and to support various projects related to our facilities and programs.

4. Teen Lifeline's teen volunteers are essential to the life-saving services we provide. This expense encompasses all costs related to supporting and expressing our gratitude for their daily contributions and achievements.

5. This expense covers the costs associated with outreach services, which are essential to our mission of fostering resilience and hope in our community. Outreach helps connect teens with valuable resources, making a significant impact on their well-being. To deliver outreach and suicide prevention services effectively, our staff travels throughout Arizona to engage with agencies, teens, parents, school personnel, and other community members. This expense ensures our staff can expand Teen Lifeline's impact by reaching more communities and enhancing our outreach efforts.

6. Teen Lifeline's staff is dedicated to advancing their clinical skills and staying current with the latest best practices. This expense supports ongoing professional development, ensuring our team remains at the forefront of the ever-evolving mental health field.

7. This expense covers the essential communication efforts required to keep community members and partner agencies engaged in safeguarding our youth. It also includes the costs for telephones used in our peer-to-peer crisis hotline, ensuring we remain accessible and effective in our support.

8. Teen Lifeline is dedicated to partnering with and collaborating with Tucson community members. This expense covers the costs associated with maintaining a center in Tucson, where our teen volunteers and staff will deliver vital services. The building's location serves as a dedicated space where Teen Lifeline's teen volunteers can gather, take calls and texts on the crisis hotline, and receive support from both staff members and fellow volunteers. This expense covers the

utilities for the building where these activities occur. This expense covers the costs associated with purchasing, maintaining, and leasing technological and facility equipment. It ensures our staff has access to essential tools and resources, facilitating their ability to perform operational tasks efficiently and effectively.

9. Audit/Tax Prep/Bank Charges/ Payroll Processing

10. Board of Directors

11. Our organization uses mailing and delivery services to distribute suicide prevention resources to agencies, schools, and community groups. Additionally, this covers some of the costs associated with connecting with donors, enabling us to effectively communicate our appreciation for their support. Teen Lifeline prints informational materials for outreach events and training sessions. These documents are crucial for our outreach efforts, ensuring that individuals are well-informed about available resources. This expense covers the cost of supplies needed for daily operations, ensuring that our staff can effectively deliver essential services.

12. Director Salaries

13. Administrative Staff Salaries

14. Programmatic Staff Salaries

15. Taxes & ERE & Employer Match Simple IRA

Other explanation: This budget outlines the expenses necessary for Teen Lifeline to fulfill our mission of strengthening teen resilience and preventing suicide. As we expand our reach, we are more committed than ever to saving young lives across Arizona. Your support is crucial in helping us make a profound difference in the lives of our state's teens. We sincerely appreciate your consideration and support of this essential mission.

To ensure a complete application and proper submission please refer to the Grant Application Instructions.

INTERNAL REVENUE SERVICE
P. O. BOX 2508
CINCINNATI, OH 45201

DEPARTMENT OF THE TREASURY

Date: DEC 18 2003

TEEN LIFELINE INC
PO BOX 10745
PHOENIX, AZ 85064

Employer Identification Number:
86-0966427
DLN:
17053333721063
Contact Person:
ERIC J BERTELSEN ID# 31323
Contact Telephone Number:
(877) 829-5500
Public Charity Status:
170(b)(1)(A)(vi)

Dear Applicant:

Our letter dated November 1999, stated you would be exempt from Federal income tax under section 501(c)(3) of the Internal Revenue Code, and you would be treated as a public charity during an advance ruling period.

Based on our records and on the information you submitted, we are pleased to confirm that you are exempt under section 501(c)(3) of the Code, and you are classified as a public charity under the Code section listed in the heading of this letter.

Publication 557, Tax-Exempt Status for Your Organization, provides detailed information about your rights and responsibilities as an exempt organization. You may request a copy by calling the toll-free number for forms, (800) 829-3676. Information is also available on our Internet Web Site at www.irs.gov.

If you have general questions about exempt organizations, please call our toll-free number shown in the heading between 8:00 a.m. - 6:30 p.m. Eastern time.

Please keep this letter in your permanent records.

Sincerely yours,

Lois G. Lerner

Lois G. Lerner
Director, Exempt Organizations
Rulings and Agreements

Letter 1050 (DO/CG)

City Council Memorandum Community Services Memo No. CS26-006

Date: September 15, 2025
To: Mayor and Council
Thru: John M. Pombier, Acting City Manager
Ryan Peters, Deputy City Manager
John Sefton, Community Services Director
From: Rachelle Kuzyk, Library Manager
Subject: Sole Source Purchase of OCLC Cloud Library Services

Proposed Motion:

Move City Council approve the sole source purchase of OCLC Cloud Library Services in an amount not to exceed $140,000.

Background/Discussion:

The Chandler Public Library has been using OCLC CloudLibrary for the past year, following its acquisition from Bibliotheca by OCLC. The library had been using Bibliotheca's CloudLibrary since 2014, when the library moved from the Greater Phoenix Digital Library OverDrive consortium to CloudLibrary. The shift was driven by the desire for greater autonomy in curating digital content, allowing the library to better respond to customer demand for eBooks and audiobooks.

Through CloudLibrary, Chandler participates in Arizona's statewide CloudLink system, which enables resource sharing among libraries across the state. This collaboration significantly expands the variety of digital materials available to Chandler patrons and helps reduce wait times for popular titles.

CloudLibrary also integrates directly with the library's online catalog, enabling patrons to browse and check out digital items without leaving the catalog interface. Additionally, the CloudLibrary app includes NewsStand, Chandler Library's primary platform for digital magazines, offering a convenient and unified experience for accessing all types of digital content.

OCLC is the only source from which Chandler Public Library may obtain CloudLibrary and CloudLink services, as well as obtain and integrate the following services into its CloudLibrary subscription: Comics Plus, NewsStand, Biblio+, Biblioboard and NoveList Reading Recommendations.

Evaluation:

OCLC CloudLibrary is a digital content platform that provides Chandler Public Library patrons with access to eBooks, audiobooks, and other digital resources. The library received a change request award of $62,500 for FY 25/26 to increase resources in the collection budget, including digital resources.

Staff has reviewed this as a sole source purchase based on established sole source criteria. Staff recommends approving the purchase of OCLC CloudLibrary services through sole source procurement. The contract is authorized under the SAVE cooperative purchasing agreement with Maricopa County.

Fiscal Impact

Account No.	Fund Name	Program Name	Dollar Amount	CIP Funded Y/N
101.4310.5320.8LEB	General Fund	N/A	$140,000	N

Attachments

Maricopa County Electronic Resources Contract

OCLC Sole Source Approval

SERIAL 230077-S ELECTRONIC RESOURCES AND MULTIMEDIA DOWNLOADS

DATE OF LAST REVISION: October 28, 2024 CONTRACT END DATE: March 31, 2026

CONTRACT PERIOD THROUGH MARCH 31, ~~2024~~ 2026

TO: All Departments

FROM: Office of Procurement Services

SUBJECT: Contract for **ELECTRONIC RESOURCES AND MULTIMEDIA DOWNLOADS**

Attached to this letter is published an effective purchasing contract for products and/or services to be supplied to Maricopa County activities as awarded by Maricopa County on **March 29, 2023**

All purchases of products and/or services listed on the attached pages of this letter are to be obtained from the vendor holding the contract. Individuals are responsible to the vendor for purchases made outside of contracts. The contract period is indicated above.

Kevin Tyne

Kevin Tyne, Chief Procurement Officer
Office of Procurement Services

RB/**mm**
Attach

Copy to: Office of Procurement Services
John Werbach, Library District
Erin MacFarlane, Library District
Michael Porter, Library District

(Please remove Serial 171101-S from your contract notebooks)

OCLC INN, 6565 KILGROUR PL, DUBLIN. OH 43017
~~BIBLIOTHECA, LLC, 3169 HOLCOMB BRIDGE RD., SUITE 200, NORCROSS, GA 30071~~

COMPANY NAME:	~~Bibliotheca, LLC~~ **OCLC, Inc.**
DOING BUSINESS AS (dba):	
MAILING ADDRESS:	~~3169 Holcomb Bridge Rd, Suite 206, Norcross, GA 30071~~ **6565 Kilgour Place. Dublin, OH 43017**
REMIT TO ADDRESS:	~~P.O. Box 744378 Atlanta, GA 30384-4378~~
TELEPHONE NUMBER:	~~678-336-7980 x301~~ **614) 764-60000**
FAX NUMBER:	~~877-689-2269~~ **(614) 764-6096**
WWW ADDRESS:	~~www.bibliotheca.com~~ **www.oclc.org**
REPRESENTATIVE NAME:	~~Katie Westfall~~ **Brett Ward**
REPRESENTATIVE TELEPHONE NUMBER:	~~678-336-7980 x301~~ **(614) 718-7124**
REPRESENTATIVE EMAIL ADDRESS	~~bids-na@bibliotheca.com~~ **wardb@oclc.org**

	YES	NO	REBATE
WILL ALLOW OTHER GOVERNMENTAL ENTITIES TO PURCHASE FROM THIS CONTRACT:	☑	☐	
WILL ACCEPT PROCUREMENT CARD FOR PAYMENT:	☑	☐	
PAYMENT TERMS: NET 30 DAYS			

CATALOG DISCOUNT		
	Catalog Discount Description	
Products	Catalog Discount	Information
cloudLibrary, Comics Plus Annual Subscription, cloudLibrary biblio+ Newstand	0%	MCLD can browse the full catalog in the Discovery Library Demo with the following URL https://ebook.yourcloudlibrary.com/library/dccentral/Featured. Content Acquisition Tool: https://cat.yourcloudlibrary.com/login

PRICING SHEET: NIGP CODE 78587

Terms: NET 30

Vendor Number: ~~VC0000003784~~ **VC0000003188**

Certificates of Insurance Required

Contract Period: To cover the period ending **March 31,** ~~2024~~ ~~2024~~ **2026.**

ELECTRONIC RESOURCES AND MULTIMEDIA DOWNLOADS

1.0 INTENT

1.1 The intent of this solicitation is to establish a multiple-award contract with providers of digital books, magazines, videos, music and other downloadable content and other resource as well as database access and any related and/or supporting services.

1.2 Other governmental entities under agreement with Maricopa County (County) may have access to services provided hereunder (see also Sections 3.12 and 3.13 below).

1.3 The County reserves the right to add additional contractors, at the County's sole discretion, in cases where the currently listed contractors are of an insufficient number or skill set to satisfy the County's needs or to ensure adequate competition on any project or task order work.

1.4 County reserves the right to award this contract to multiple vendors. The County reserves the right to award in whole or in part, by item or group of items, by section or geographic area, or make multiple awards, where such action serves the County's best interest.

2.0 SPECIFICATIONS

2.1 Contractor shall provide access to fiction and non-fiction e-books and e-audiobooks, magazines, streaming video and music in, in all subject areas, all languages and for all ages including:

2.1.1 Adult – Providing information to the general population for leisure, personal interests, general knowledge, and life-long learning.

2.1.2 Juvenile – Providing information for leisure, personal interests and to ensuring adequate content for our K-12 customers.

2.1.3 Young Adult – Providing content for leisure interests as well as educational support.

2.2 DELIVERY METHOD

It is preferred that resources be delivered via the Internet to library service locations (i.e.: library buildings) in Maricopa County, Arizona. Remote access to these resources from our customer's homes or offices is considered a standard service by The Library District (District). Either the contractor and/or District will implement proper customer authentication methods. The District currently takes appropriate measures to ensure that electronic resources are only used by authorized customers of our branches and will continue to do so under the resulting contract.

2.3 RESOURCES AND/OR SERVICES

2.3.1 This contract covers any type of downloadable and/or aggregated electronic book, music, video, game, multimedia or other resource as well as database access and any related and/or supporting services. Additionally, any other formats (currently existing, in development, or not yet developed) chosen through the life of the contract that is appropriate for use in the public library setting may be purchased against the resulting contract.

2.3.2 Where applicable and appropriate, contractor shall provide server space, customized website and related resources and services.

2.4 PREFERRED FEATURES

2.4.1 Preferred features set forth in this section indicate the minimal information to be considered, capabilities that are desired, or minimum performance levels that are desired.

2.4.1.1 Copyright and royalty fees shall be included in price.

2.4.1.2 Statistics

2.4.1.2.1 Contractor shall provide usage statistics, in an electronic format, to District at no additional charge, upon request.

2.4.1.3 Remote Access

2.4.1.3.1 Contractor shall provide remote access. “Remote access” is defined as access from workstations in buildings on the same telecommunications network as the library (e.g., county government, city government, etc.), and access from home, office or other outside-the-library locations used by the library’s customers.

2.4.1.4 Seamless Integration

2.4.1.4.1 There shall be seamless integration with the District’s website, patron authentication, and catalog systems using standard protocol. It is our intention to integrate customer title records for electronic resources with other materials.

2.4.1.5 Printing Results

2.4.1.5.1 End user shall have ability to print.

2.4.1.6 Training

2.4.1.6.1 On-site and/or distance learning options are our first preference. Online tutorials or other self-training tools may be considered.

2.4.1.7 Machine Readable Cataloging Record (MARC) Catalog Records

2.4.1.7.1 Contractor shall provide MARC records for integration into the Library District’s catalog. Direct links from the Library District’s catalog to the digital title page or appropriate destination will be provided to customers for resource access.

2.4.1.8 Enhanced Metadata

2.4.1.8.1 Metadata support (images/cover art) including information about the collection (title, artist, reviews, and genre) may be considered a plus.

2.4.1.9 Collection Development Tools

2.4.1.9.1 Collection development tools shall be available to allow development of the District electronic resources. The District will be able to search for titles using various limiting options (i.e., format, language, subject, and publisher).

2.4.1.10 Purchase Order Tools

2.4.1.10.1 Purchases order tools shall be made available that develop lists, provide pricing and facilitate invoicing and payment.

2.5 **TECHNICAL AND DESCRIPTIVE SALES LITERATURE**

The contractor <u>shall provide URL(s) for catalog(s)</u> and may also provide sales literature and brochures and copies of any manufacturer's technical and/or descriptive literature (e.g., URLs to webpages are preferred) specific to the material(s) the contractor proposes to provide. Literature shall be sufficient in detail to allow for full and fair evaluation of the material(s) submitted and must be included with the bid. Failure to include this information may result in the bid being rejected.

3.0 PURCHASING REQUIREMENTS

3.1 DELIVERY

3.1.1 Delivery is desired as soon as possible, and details shall be stipulated on the purchase order. Contractor shall notify the County representative listed on the order if the requested delivery date and/or the anticipated lead time cannot be met. Failure to communicate to County changes in the order status may result in default proceedings.

3.1.2 Supplies or equipment shall be delivered between the hours of 8:00 a.m. and 5:00 p.m. MST, Monday through Friday, except on County recognized holidays.

3.1.3 Delivery shall be F.O.B. Destination Freight Prepaid.

3.2 EXPEDITED DELIVERY

3.2.1 If the department determines that expedited delivery or other alternate shipping is required, it shall notify the contractor. Contractor shall determine any additional costs associated with such delivery terms and communicate that cost to the department.

3.2.2 The department shall not advise the contractor to proceed with an expedited shipment until acceptable terms are agreed upon and a purchase order is issued. Upon agreeing to the additional costs, the department shall advise the contractor to proceed.

3.2.3 Upon receipt of material(s) and invoicing, the department shall ensure that any additional charges are in compliance with and do not exceed agreed to costs. The department shall retain all documents related to these costs within the agency purchase file.

3.3 SHIPPING DOCUMENTS

A packing list or other suitable shipping document shall accompany each shipment and shall include the following:

3.3.1 Contract serial number

3.3.2 Contractor's name and address

3.3.3 Department name and address

3.3.4 Department purchase order number

3.3.5 A description of product(s) shipped, including item number(s), quantity(ies), number of containers and package number(s), as applicable

3.4 SHIPPING TERMS

Bid price(s) and terms shall be F.O.B. Destination Freight Prepaid at the location(s) stipulated on the purchase order. All delivery locations are within Maricopa County.

3.5 ACCEPTANCE

Upon completion, services shall be deemed accepted and the warranty period shall begin. Successful service delivery shall be defined as a) material(s)/equipment is installed (as necessary) and fully operational; and b) the department has deemed all service/work completed, including but not limited to any inspection, repair, installation, design, development, deployment, operation, and initial training, (as applicable). Additionally, all documentation shall be completed prior to final acceptance.

3.6 USAGE REPORT

Contractor shall furnish the County a usage report upon request delineating the acquisition activity governed by the contract. The format of the report shall be approved by the County and shall disclose the quantity and dollar value of each contract item by individual unit.

3.7 BACKGROUND CHECK

Bidders/proposers need to be aware that they may be required to pass multiple background checks (e.g., Sheriff’s Office, County Attorney's Office, Courts, as well as County general government) to determine if the respondent is acceptable to do business with the County. This applies to (but is not limited to) the company, subcontractors, and employees.

3.8 INVOICES AND PAYMENTS

3.8.1 Contractor shall submit one legible copy of their detailed invoice before payment(s) will be made. Incomplete invoices will not be processed. At a minimum, the invoice must provide the following information:

- Company name, address, and contact information
- County bill-to name and contact information
- Contract serial number
- County purchase order number
- Invoice number and date
- Payment terms
- Date of service or delivery
- Quantity (e.g., number of days or weeks)
- Contract item number(s)
- Arrival time and completion time (if applicable)
- Description of purchase (product or services)
- Pricing per unit of purchase
- Extended price (by line item)
- Total amount due

3.8.2 Commodities must be billed as a separate line item.

3.8.3 Problems regarding billing or invoicing shall be directed to the department as listed on the purchase order.

3.8.4 Payment shall only be made to the contractor by Accounts Payable through the Maricopa County Vendor Express Payment Program. This is an Electronic Funds

Transfer (EFT) process. After contract award, the contractor shall complete the Vendor Registration Form accessible through the County Department of Finance Vendor Registration website at https://www.maricopa.gov/5169/Vendor-Information.

3.8.5 Discounts offered in the contract shall be calculated based on the date a properly completed invoice is received by the County.

3.8.6 EFT payments to the routing and account numbers designated by the contractor shall include the details on the specific invoices that the payment covers. Contractor is required to discuss remittance delivery capabilities with their designated financial institution for access to those details.

3.9 APPLICABLE TAXES

3.9.1 It is the responsibility of the contractor to determine any and all applicable taxes and include those taxes in their proposal. The legal liability to remit the tax is on the entity conducting business in Arizona. Tax is not a determining factor in contract award.

3.9.2 The County will look at the price or offer submitted and will not deduct, add, or alter pricing based on speculation or application of any taxes, nor will the County provide contractor any advice or guidance regarding taxes. If you have questions regarding your tax liability, seek advice from a tax professional prior to submitting your bid. You may also find information at https://www.azdor.gov/Business.aspx. Once your bid is submitted, the offer is valid for the time specified in this solicitation, regardless of mistake or omission of tax liability. If the County finds over payment of a project due to tax consideration that was not due, the contractor will be liable to the County for that amount, and by contracting with the County agrees to remit any overpayments back to the County for miscalculations on taxes included in a bid price.

3.9.3 Tax Indemnification: Contractor and all subcontractors shall pay all Federal, state, and local taxes applicable to their operation and any persons employed by the contractor. Contractor shall, and require all subcontractors to, hold the County harmless from any responsibility for taxes, damages, and interest, if applicable, contributions required under Federal and/or state and local laws and regulations, and any other costs including transaction privilege taxes, unemployment compensation insurance, Social Security, and Workers' Compensation. Contractor may be required to establish, to the satisfaction of County, that any and all fees and taxes due to the City or the State of Arizona for any license or transaction privilege taxes, use taxes, or similar excise taxes are currently paid (except for matters under legal protest).

3.10 PERFORMANCE

It shall be the contractor's responsibility to meet the proposed performance requirements. The County reserves the right to obtain services on the open market in the event the contractor fails to perform, and any price differential will be charged against the contractor.

3.11 POST AWARD MEETING

Contractor may be required to attend a post-award meeting with the department to discuss the terms and conditions of this contract. This meeting will be coordinated by the procurement officer of the contract.

3.12 STRATEGIC ALLIANCE for VOLUME EXPENDITURES (SAVE)

The County is a member of the SAVE cooperative purchasing group. SAVE includes the State of Arizona, many Phoenix metropolitan area municipalities, and many K-12 unified school districts. Under the SAVE Cooperative Purchasing Agreement, and with the concurrence of the successful respondent under this solicitation, a member of SAVE may access a contract resulting from a solicitation issued by the County. If contractor does not want to grant such access to a member of SAVE, state so in the bid. In the absence of a statement to the contrary, the County will assume that contractor does wish to grant access to any contract that may result from this bid. The County assumes no responsibility for any purchases by using entities.

3.13 INTERGOVERNMENTAL COOPERATIVE PURCHASING AGREEMENTS (ICPAs)

County currently holds ICPAs with numerous governmental entities. These agreements allow those entities, with the approval of the contractor, to purchase their requirements under the terms and conditions of the County contract. It is the responsibility of the non-County government entity to perform its own due diligence on the acceptability of the contract under its applicable procurement rules, processes, and procedures. Certain governmental agencies may not require an ICPA and may utilize this contract if it meets their individual requirements. Other governmental agencies may enter into a separate Statement of Work with the contractor to meet their own requirements. The County is not a party to any uses of this contract by other governmental entities.

3.14 VOLUNTARY EMPLOYEE DISCOUNTS

3.14.1 Contractors may voluntarily offer discounts to County employees for products or services provided under this contract. Whether a contractor offers or does not offer an employee discount is not a factor considered in the evaluation of responses to this solicitation.

3.14.2 Any discount offered is part of a commercial transaction between the contractor and individual County employees and the County is not a party to the transaction. Any disputes or issues arising from an individual commercial transaction between the contractor and an individual County employee is a matter between the contractor and the employee. If a discount is offered, the terms will be announced to County employees.

4.0 CONTRACTUAL TERMS & CONDITIONS

4.1 CONTRACT TERM

This Invitation for Bids (IFB) is for awarding a firm, fixed price purchasing contract to cover a term of one year.

4.2 OPTION TO RENEW

The County may, at its option and with the concurrence of the contractor, renew the term of this contract up to a maximum of four additional years, (or at the County's sole discretion, extend the contract on a month-to-month basis for a maximum of six months after expiration). Contractor shall be notified in writing by the Office of Procurement Services of the County's intention to renew the contract term at least 60 calendar days prior to the expiration of the original contract term.

4.3 CONTRACT COMPLETION

In preparation for contract completion, the contractor shall make all reasonable efforts for an orderly transition of its duties and responsibilities to another provider and/or to the County. This may include, but is not limited to, preparation of a transition plan and

cooperation with the County or other providers in the transition. The transition includes the transfer of all records and other data in the possession, custody, or control of the contractor that are required to be provided to the County either by the terms of this agreement or as a matter of law. The provisions of this clause shall survive the expiration or termination of this agreement.

4.4 PRICE ADJUSTMENTS

4.4.1 Any requests for reasonable price adjustments must be submitted 60 calendar days prior to the contract expiration. Requests for adjustment in cost of labor and/or materials must be supported by appropriate documentation. The reasonableness of the request will be determined by comparing the request with the Consumer Price Index or by performing a market survey. If County agrees to the adjusted price terms, County will issue written approval of the change and provide an updated version of the contract. The new change shall not be in effect until the date stipulated on the updated version of the contract.

4.5 INDEMNIFICATION

4.5.1 To the fullest extent permitted by law, and to the extent that claims, damages, losses, or expenses are not covered and paid by insurance purchased by the contractor, the contractor shall defend, indemnify, and hold harmless the County (as Owner), its agents, representatives, officers, directors, officials, and employees from and against all claims, damages, losses, and expenses (including, but not limited to attorneys' fees, court costs, expert witness fees, and the costs and attorneys' fees for appellate proceedings) arising out of, or alleged to have resulted from, the negligent acts, errors, omissions, or mistakes relating to the performance of this contract.

4.5.2 Contractor's duty to defend, indemnify, and hold harmless the County, its agents, representatives, officers, directors, officials, and employees shall arise in connection with any claim, damage, loss, or expense that is attributable to bodily injury, sickness, disease, death, or injury to, impairment of, or destruction of tangible property, including loss of use resulting therefrom, caused by negligent acts, errors, omissions, or mistakes in the performance of this contract, but only to the extent caused by the negligent acts or omissions of the contractor, a subcontractor, anyone directly or indirectly employed by them, or anyone for whose acts they may be liable, regardless of whether or not such claim, damage, loss, or expense is caused in part by a party indemnified hereunder.

4.5.3 The amount and type of insurance coverage requirements set forth herein will in no way be construed as limiting the scope of the indemnity in this section.

4.5.4 The scope of this indemnification does not extend to the sole negligence of County.

4.6 INSURANCE

4.6.1 Contractor, at contractor’s own expense, shall purchase and maintain, at a minimum, the herein stipulated insurance from a company or companies duly licensed by the State of Arizona and possessing an AM Best, Inc. category rating of B++. In lieu of State of Arizona licensing, the stipulated insurance may be purchased from a company or companies, which are authorized to do business in the State of Arizona, provided that said insurance companies meet the approval of County. The form of any insurance policies and forms must be acceptable to County.

4.6.2 All insurance required herein shall be maintained in full force and effect until all work or service required to be performed under the terms of the contract is satisfactorily completed and formally accepted. Failure to do so may, at the sole discretion of County, constitute a material breach of this contract.

4.6.3 In the event that the insurance required is written on a claims-made basis, contractor warrants that any retroactive date under the policy shall precede the effective date of this contract and either continuous coverage will be maintained, or an extended discovery period will be exercised for a period of two years beginning at the time work under this contract is completed.

4.6.4 Contractor's insurance will be primary insurance as respects County, and any insurance or self-insurance maintained by County will not contribute to it.

4.6.5 Any failure to comply with the claim reporting provisions of the insurance policies or any breach of an insurance policy warranty shall not affect the County's right to coverage afforded under the insurance policies.

4.6.6 The insurance policies may provide coverage that contains deductibles or self-insured retentions. Such deductible and/or self-insured retentions shall not be applicable with respect to the coverage provided to County under such policies. Contractor shall be solely responsible for the deductible and/or self-insured retention and County, at its option, may require contractor to secure payment of such deductibles or self-insured retentions by a surety bond or an irrevocable and unconditional letter of credit.

4.6.7 The insurance policies required by this contract, except Workers' Compensation and Errors and Omissions, shall name County, its agents, representatives, officers, directors, officials, and employees as additional insureds.

4.6.8 The policies required hereunder, except Workers' Compensation and Errors and Omissions, shall contain a waiver of transfer of rights of recovery (subrogation) against County, its agents, representatives, officers, directors, officials, and employees for any claims arising out of contractor's work or service.

4.6.9 If available, the insurance policies required by this contract may be combined with Commercial Umbrella Insurance policies to meet the minimum limit requirements. If a Commercial Umbrella insurance policy is utilized to meet insurance requirements, the Certificate of Insurance shall indicate which lines the Commercial Umbrella Insurance covers.

4.6.9.1 Commercial General Liability

Commercial General Liability (CGL) insurance with a limit of not less than $1,000,000 for each occurrence, $2,000,000 Products/Completed Operations Aggregate, and $2,000,000 General Aggregate Limit. The policy shall include coverage for premises liability, bodily injury, broad form property damage, personal injury, products and completed operations and blanket contractual coverage, and shall not contain any provisions which would serve to limit third-party action over claims. There shall be no endorsement or modifications of the CGL limiting the scope of coverage for liability arising from explosion, collapse, or underground property damage.

4.6.9.2 Automobile Liability

Commercial/Business Automobile Liability insurance with a combined single limit for bodily injury and property damage of not less than $2,000,000 each occurrence with respect to any of the contractor's

owned, hired, and non-owned vehicles assigned to or used in performance of the contractor's work or services or use or maintenance of the premises under this contract.

4.6.9.3 Workers' Compensation

4.6.9.3.1 Workers' Compensation insurance to cover obligations imposed by Federal and state statutes having jurisdiction of contractor's employees engaged in the performance of the work or services under this contract; and Employer's Liability insurance of not less than $1,000,000 for each accident, $1,000,000 disease for each employee, and $1,000,000 disease policy limit.

4.6.9.3.2 Contractor, its subcontractors, and sub-subcontractors waive all rights against this contract and its agents, officers, directors, and employees for recovery of damages to the extent these damages are covered by the Workers' Compensation and Employer's Liability or Commercial Umbrella Liability insurance obtained by contractor, its subcontractors, and its sub-subcontractors pursuant to this contract.

4.6.9.4 Certificates of Insurance

4.6.9.4.1 Prior to contract award**,** contractor shall furnish the County with valid and complete certificates of insurance, or formal endorsements as required by the contract in the form provided by the County, issued by contractor's insurer(s), as evidence that policies providing the required coverage, conditions, and limits required by this contract are in full force and effect. Such certificates shall identify this contract number and title.

4.6.9.4.2 In the event any insurance policy(ies) required by this contract is (are) written on a claims-made basis, coverage shall extend for two years past completion and acceptance of contractor's work or services and as evidenced by annual Certificates of Insurance.

4.6.9.4.3 If a policy does expire during the life of the contract, a renewal certificate must be sent to County 15 calendar days prior to the expiration date.

4.6.9.5 Cancellation and Expiration Notice

Applicable to all insurance policies required within the insurance requirements of this contract, contractor's insurance shall not be permitted to expire, be suspended, be canceled, or be materially changed for any reason without 30 calendar days prior written notice to Maricopa County. Contractor must provide notice to Maricopa County, within two business days of receipt, if they receive notice of a policy that has been or will be suspended, canceled, materially changed for any reason, has expired, or will be expiring. Such notice shall be sent directly to Maricopa County Office of Procurement Services and shall be mailed or hand delivered to 301 W. Jefferson St., Suite 700, Phoenix, AZ 85003, or emailed to the procurement officer noted in the solicitation.

4.7 FORCE MAJEURE

4.7.1 Neither party shall be liable for failure of performance, nor incur any liability to the other party on account of any loss or damage resulting from any delay or failure to perform all or any part of this contract, if such delay or failure is caused by events, occurrences, or causes beyond the reasonable control and without negligence of the parties. Such events, occurrences, or causes include, but are not limited to, acts of God/nature (including fire, flood, earthquake, storm, hurricane, or other natural disaster), war, invasion, act of foreign enemies, hostilities (whether war is declared or not), civil war, riots, rebellion, revolution, insurrection, military or usurped power or confiscation, terrorist activities, nationalization, government sanction, lockout, blockage, embargo, labor dispute, strike, and interruption or failure of electricity or telecommunication service, and pandemic.

4.7.2 Each as applicable, shall give the other party notice of its inability to perform and particulars in reasonable detail of the cause of the inability. Each party must use best efforts to remedy the situation and remove, as soon as practicable, the cause of its inability to perform or comply.

4.7.3 The party asserting Force Majeure as a cause for non-performance shall have the burden of proving that reasonable steps were taken to minimize delay or damages caused by foreseeable events, that all non-excused obligations were substantially fulfilled, and that the other party was timely notified of the likelihood or actual occurrence which would justify such an assertion, so that other prudent precautions could be contemplated.

4.8 ORDERING AUTHORITY

Any request for purchase shall be accompanied by a valid purchase order issued by a County department or directed by a Certified Agency Procurement Aid (CAPA) with a purchase card for payment.

4.9 AVAILABILITY OF FUNDS

4.9.1 The provisions of this contract relating to payment shall become effective when funds assigned for the purpose of compensating the contractor as herein provided are actually available to County for disbursement. The County will be the sole judge and authority in determining the availability of funds under this contract. County will keep the contractor fully informed as to the availability of funds.

4.9.2 If any action is taken by any state agency, Federal department, or any other agency or instrumentality to suspend, decrease, or terminate its fiscal obligations under, or in connection with, this contract, County may amend, suspend, decrease, or terminate its obligations under, or in connection with, this contract. In the event of termination, County will be liable for payment only for services rendered prior to the effective date of the termination, provided that such services are performed in accordance with the provisions of this contract. County will give written notice of the effective date of any suspension, amendment, or termination under this section, at least 10 days in advance.

4.10 PROCUREMENT CARD ORDERING CAPABILITY

County may opt to use a procurement card (VISA or Mastercard) to make payment for orders under this contract.

4.11 INTERNET ORDERING CAPABILITY

It is the intent of Maricopa County to use the Internet to communicate and to place orders under this contract.

4.12 NO MINIMUM OR MAXIMUM PURCHASE OBLIGATION

This contract does not guarantee any minimum or maximum purchases will be made. Orders will only be placed under this contract when the County identifies a need and proper authorization and documentation have been approved.

4.13 PURCHASE ORDERS

4.13.1 County reserves the right to cancel purchase orders within a reasonable period of time after issuance. Should a purchase order be canceled, the County agrees to reimburse the contractor for actual and documentable costs incurred by the contractor in response to the purchase order. The County will not reimburse the contractor for any costs incurred after receipt of County notice of cancellation, or for lost profits, or for shipment of product prior to issuance of purchase order.

4.13.2 Contractor agrees to accept verbal notification of cancellation of purchase orders from the County with written notification to follow. Contractor specifically acknowledges to be bound by this cancellation policy.

4.14 SUSPENSION OF WORK

The procurement officer may order the contractor, in writing, to suspend, delay, or interrupt all or any part of the work of this contract for the period of time that the procurement officer determines appropriate for the convenience of the County. No adjustment shall be made under this clause for any suspension, delay, or interruption to the extent that performance would have been so suspended, delayed, or interrupted by any other cause, including the fault or negligence of the contractor. No request for adjustment under this clause shall be granted unless the claim, in an amount stated, is asserted in writing as soon as practicable after the termination of the suspension, delay, or interruption, but not later than the date of final payment under the contract.

4.15 STOP WORK ORDER

4.15.1 The procurement officer may, at any time, by written order to the contractor, require the contractor to stop all, or any part, of the work called for by this contract for a period of 90 calendar days after the order is delivered to the contractor, and for any further period to which the parties may agree. The order shall be specifically identified as a stop work order issued under this clause. Upon receipt of the order, the contractor shall immediately comply with its terms and take all reasonable steps to minimize the incurrence of costs allocable to the work covered by the order during the period of work stoppage. Within a period of 90 calendar days after a stop work order is delivered to the contractor, or within any extension of that period to which the parties shall have agreed, the procurement officer shall either:

4.15.2 cancel the stop work order; or

4.15.3 terminate the work covered by the order as provided in the Termination for Default or the Termination for Convenience clause of this contract.

4.15.4 The procurement officer may make an equitable adjustment in the delivery schedule and/or contract price, and the contract shall be modified, in writing, accordingly, if the contractor demonstrates that the stop work order resulted in an increase in costs to the contractor.

4.16 TERMINATION FOR CONVENIENCE

Maricopa County may terminate the resultant contract for convenience by providing 60 calendar days advance notice to the contractor.

4.17 TERMINATION FOR DEFAULT

4.17.1 The County may, by written Notice of Default to the contractor, terminate this contract in whole or in part if the contractor fails to:

4.17.1.1 deliver the supplies or to perform the services within the time specified in this contract or any extension;

4.17.1.2 make progress, so as to endanger performance of this contract; or

4.17.1.3 perform any of the other provisions of this contract.

4.17.2 The County's right to terminate this contract under these subparagraphs may be exercised if the contractor does not cure such failure within 10 business days (or more if authorized in writing by the County) after receipt of a Notice to Cure from the procurement officer specifying the failure.

4.18 STATUTORY RIGHT OF CANCELLATION FOR CONFLICT OF INTEREST

Notice is given that, pursuant to Arizona Revised Statute (A.R.S.) § 38-511, the County may cancel any contract without penalty or further obligation within three years after execution of the contract, if any person significantly involved in initiating, negotiating, securing, drafting, or creating the contract on behalf of the County is at any time, while the contract or any extension of the contract is in effect, an employee or agent of any other party to the contract in any capacity or consultant to any other party of the contract with respect to the subject matter of the contract. Additionally, pursuant to A.R.S. § 38-511, the County may recoup any fee or commission paid or due to any person significantly involved in initiating, negotiating, securing, drafting, or creating the contract on behalf of the County from any other party to the contract arising as the result of the contract.

4.19 OFFSET FOR DAMAGES

In addition to all other remedies at Law or Equity, the County may offset from any money due to the contractor any amounts contractor owes to the County for damages resulting from breach or deficiencies in performance of the contract.

4.20 SUBCONTRACTING

4.20.1 Contractor may not assign to another contractor or subcontract to another party for performance of the terms and conditions hereof without the written consent of the County. All correspondence authorizing subcontracting must reference the bid serial number and identify the job or project.

4.20.2 The subcontractor's rate for the job shall not exceed that of the prime contractor's rate, as bid in the pricing section, unless the prime contractor is willing to absorb any higher rates. The subcontractor's invoice shall be invoiced directly to the prime contractor, who in turn shall pass-through the costs to the County, without mark-up. A copy of the subcontractor's invoice must accompany the prime contractor's invoice.

4.21 AMENDMENTS

All amendments to this contract shall be in writing and approved/signed by both parties. Maricopa County Office of Procurement Services shall be responsible for approving all amendments for Maricopa County.

4.22 ADDITIONS/DELETIONS OF SERVICES

The County reserves the right to add and/or delete services to a contract. If additional services are required from a contract, prices for such additions will be negotiated between the contractor and the County.

4.23 RIGHTS IN DATA

4.23.1 The County shall have the use of data and reports resulting from a contract without additional cost or other restriction except as may be established by law or applicable regulation. Each party shall supply to the other party, upon request, any available information that is relevant to a contract and to the performance thereunder.

4.23.2 Data, records, reports, and all other information generated for the County by a third party as the result of a contract are the property of the County and shall be provided in a format designated by the County or shall be and remain accessible to the County into perpetuity.

4.24 ACCESS TO AND RETENTION OF RECORDS FOR THE PURPOSE OF AUDIT AND/OR OTHER REVIEW

4.24.1 In accordance with section MC1-372 of the Maricopa County Procurement Code, the contractor agrees to retain (physical or digital copies of) all books, records, accounts, statements, reports, files, and other records and back-up documentation relevant to this contract for six years after final payment or until after the resolution of any audit questions which could be more than six years, whichever is latest. The County, Federal or state auditors and any other persons duly authorized by the department shall have full access to and the right to examine, copy, and make use of, any and all said materials.

4.24.2 If the contractor's books, records, accounts, statements, reports, files, and other records and back-up documentation relevant to this contract are not sufficient to support and document that requested services were provided, the contractor shall reimburse Maricopa County for the services not so adequately supported and documented.

4.25 AUDIT DISALLOWANCES

If at any time it is determined by the County that a cost for which payment has been made is a disallowed cost, the County shall notify the contractor in writing of the disallowance. The course of action to address the disallowance shall be at sole discretion of the County, and may include either an adjustment to future invoices, request for credit, request for a check, or a deduction from current invoices submitted by the contractor equal to the amount of the disallowance, or to require reimbursement forthwith of the disallowed amount by the contractor by issuing a check payable to Maricopa County.

4.26 STRICT COMPLIANCE

Acceptance by County of a performance that is not in strict compliance with the terms of the contract shall not be deemed to be a waiver of strict compliance with respect to all other terms of the contract.

4.27 VALIDITY

The invalidity, in whole or in part, of any provision of this contract shall not void or affect the validity of any other provision of the contract.

4.28 SEVERABILITY

The removal, in whole or in part, of any provision of this contract shall not void or affect the validity of any other provision of this contract.

4.29 RELATIONSHIPS

4.29.1 In the performance of the services described herein, the contractor shall act solely as an independent contractor, and nothing herein or implied herein shall at any time be construed as to create the relationship of employer and employee, co-employee, partnership, principal and agent, or joint venture between the County and the contractor.

4.29.2 The County reserves the right of final approval on proposed staff. Also, upon request by the County, the contractor will be required to remove any employees working on County projects and substitute personnel based on the discretion of the County within two business days, unless previously approved by the County.

4.30 NON-DISCRIMINATION

Contractor agrees to comply with all provisions and requirements of Arizona Executive Order 2009-09, including flow down of all provisions and requirements to any subcontractors. Executive Order 2009-09 supersedes Executive Order 99-4 and amends Executive Order 75-5 and is hereby incorporated into this contract as if set forth in full herein. During the performance of this contract, contractor shall not discriminate against any employee, client, or any other individual in any way because of that person's age, race, creed, color, religion, sex, disability, or national origin. (Arizona Executive Order 2009-09 can be downloaded from the Arizona Memory Project at http://azmemory.azlibrary.gov/cdm/singleitem/collection/execorders/id/680/rec/1.)

4.31 WRITTEN CERTIFICATION PURSUANT to A.R.S. § 35-393.01

If vendor engages in for-profit activity and has 10 or more employees, and if this agreement has a value of $100,000 or more, vendor certifies it is not currently engaged in, and agrees for the duration of this agreement to not engage in, a boycott of goods or services from Israel. This certification does not apply to a boycott prohibited by 50 U.S.C. § 4842 or a regulation issued pursuant to 50 U.S.C. § 4842.

4.32 CERTIFICATION REGARDING DEBARMENT AND SUSPENSION

4.32.1 The undersigned (authorized official signing on behalf of the contractor) certifies to the best of his or her knowledge and belief that the contractor, its current officers, and directors:

4.32.1.1 are not presently debarred, suspended, proposed for debarment, declared ineligible, or voluntarily excluded from being awarded any contract or grant by any United States department or agency or any state, or local jurisdiction;

4.32.1.2 have not within a three-year period preceding this contract:

4.32.1.2.1 been convicted of fraud or any criminal offense in connection with obtaining, attempting to obtain, or as the result of performing a government entity (Federal, state or local) transaction or contract;

4.32.1.2.2 been convicted of violation of any Federal or state antitrust statutes or conviction for embezzlement, theft, forgery, bribery, falsification or destruction of records, making false

statements, or receiving stolen property regarding a government entity transaction or contract;

4.32.1.3 are not presently indicted or criminally charged by a government entity (Federal, state or local) with commission of any criminal offenses in connection with obtaining, attempting to obtain, or as the result of performing a government entity public (Federal, state or local) transaction or contract;

4.32.1.4 are not presently facing any civil charges from any governmental entity regarding obtaining, attempting to obtain, or from performing any governmental entity contract or other transaction; and

4.32.1.5 have not within a three-year period preceding this contract had any public transaction (Federal, state or local) terminated for cause or default.

4.32.2 If any of the above circumstances described in the paragraph are applicable to the entity submitting a bid for this requirement, include with your bid an explanation of the matter including any final resolution.

4.32.3 Contractor shall include, without modification, this clause in all lower tier covered transactions (i.e., transactions with subcontractors) and in all solicitations for lower tier covered transactions related to this contract. If this clause is applicable to a subcontractor, the contractor shall include the information required by this clause with their bid.

4.33 VERIFICATION REGARDING COMPLIANCE WITH A.R.S. § 41-4401 AND FEDERAL IMMIGRATION LAWS AND REGULATIONS

4.33.1 By entering into the contract, the contractor warrants compliance with the Immigration and Nationality Act (INA using E-Verify) and all other Federal immigration laws and regulations related to the immigration status of its employees and A.R.S. § 23-214(A). Contractor shall obtain statements from its subcontractors certifying compliance and shall furnish the statements to the procurement officer upon request. These warranties shall remain in effect through the term of the contract. Contractor and its subcontractors shall also maintain Employment Eligibility Verification forms (I-9) as required by the Immigration Reform and Control Act of 1986, as amended from time to time, for all employees performing work under the contract and verify employee compliance using the E-Verify system and shall keep a record of the verification for the duration of the employee's employment or at least three years, whichever is longer. I-9 forms are available for download at www.uscis.gov.

4.33.2 The County retains the legal right to inspect documents of contractor and subcontractor employees performing work under this contract to verify compliance with paragraph 4.33.1 of this section. Contractor and subcontractor shall be given reasonable notice of the County's intent to inspect and shall make the documents available at the time and date specified. Should the County suspect or find that the contractor or any of its subcontractors are not in compliance, the County will consider this a material breach of the contract and may pursue any and all remedies allowed by law, including, but not limited to: suspension of work, termination of the contract for default, and suspension and/or debarment of the contractor. All costs necessary to verify compliance are the responsibility of the contractor

4.34 CONTRACTOR LICENSE REQUIREMENT

4.34.1 Contractor shall procure all permits, insurance, and licenses, and pay the charges and fees necessary and incidental to the lawful conduct of his/her business, and as necessary complete any requirements, by any and all governmental or non-governmental entities as mandated to maintain compliance with and remain in good standing. Contractor shall keep fully informed of existing and future trade or industry requirements, and Federal, state, and local laws, ordinances, and regulations which in any manner affect the fulfillment of a contract and shall comply with the same. Contractor shall immediately notify both Office of Procurement Services and the department of any and all changes concerning permits, insurance, or licenses.

4.34.2 Contractor furnishing finished products, materials, or articles of merchandise that will require installation or attachment as part of the contract shall possess any licenses required. Contractor is not relieved of its obligation to obtain and possess the required licenses by subcontracting of the labor portion of the contract. Contractors are advised to contact the Arizona Registrar of Contractors, Chief of Licensing, to ascertain licensing requirements for a particular contract. Contractor shall identify which license(s), if any, the Registrar of Contractors requires for performance of the contract.

4.35 INFLUENCE

4.35.1 As prescribed in MC1-1203 of the Maricopa County Procurement Code, any effort to influence an employee or agent to breach the Maricopa County Ethical Code of Conduct or any ethical conduct, may be grounds for disbarment or suspension under MC1-902.

4.35.2 An attempt to influence includes, but is not limited to:

4.35.2.1 A person offering or providing a gratuity, gift, tip, present, donation, money, entertainment or educational passes or tickets, or any type of valuable contribution or subsidy that is offered or given with the intent to influence a decision, obtain a contract, garner favorable treatment, or gain favorable consideration of any kind.

4.35.3 If a person attempts to influence any employee or agent of Maricopa County, the chief procurement officer, or his designee, reserves the right to seek any remedy provided by the Maricopa County Procurement Code, any remedy in equity or in the law, or any remedy provided by this contract.

4.35.4 ABSOLUTELY NO CONTACT BETWEEN THE RESPONDENT AND ANY COUNTY PERSONNEL, OTHER THAN THE OFFICE OF PROCUREMENT SERVICES, IS ALLOWED DURING THE SOLICITATION PROCESS UNLESS THE COMMUNICATION IS IN REGARD TO PRE-EXISTING BUSINESS WITH THE COUNTY. ANY COMMUNICATIONS REGARDING THE SOLICITATION, ITS PARTICIPANTS, OR ANY DOCUMENTATION PRIOR TO THE CONTRACT AWARD MAY BE GROUNDS FOR DISMISSAL OF THE RESPONDENT FROM THE EVALUATION PROCESS.

4.36 CONFIDENTIALITY

In the course of the solicitation process, the County may disclose information that is proprietary or confidential. By submitting a bid to the solicitation, the offeror agrees that, except as necessary to prepare a response to this solicitation, neither it nor its agents or employees will communicate, divulge, or disseminate to any third-party persons or entities, any information that is disclosed to it by the County during the course of these discussions without the express written authorization of the County. If the offeror does disclose County

proprietary or confidential information to a third-party in preparing a response to this solicitation, it shall require the third-party to acknowledge and comply with this provision.

4.37 CONFIDENTIAL INFORMATION

4.37.1 Any information obtained in the course of performing this contract may include information that is proprietary or confidential to the County. This provision establishes the contractor's obligation regarding such information.

4.37.2 Contractor shall establish and maintain procedures and controls that are adequate to assure that no information contained in its records and/or obtained from the County or from others in carrying out its functions (services) under the contract shall be used by or disclosed by it, its agents, officers, or employees, except as required to efficiently perform duties under the contract. Contractor's procedures and controls, at a minimum, must be the same procedures and controls it uses to protect its own proprietary or confidential information. If, at any time during the duration of the contract, the County determines that the procedures and controls in place are not adequate, the contractor shall institute any new and/or additional measures requested by the County within 15 business days of the written request to do so.

4.37.3 Any requests to the contractor for County proprietary or confidential information shall be referred to the County for review and approval, prior to any dissemination.

4.38 PUBLIC RECORDS

Under Arizona law, all offers submitted and opened are public records and must be retained by the records manager at the Maricopa County Office of Procurement Services. Offers shall be open to public inspection and copying after contract award and execution, except for such offers or sections thereof determined to contain proprietary or confidential information by the Office of Procurement Services. If an offeror believes that information in its offer or any resulting contract should not be released in response to a public record request, under Arizona law, the offeror shall indicate the specific information deemed confidential or proprietary and submit a statement with its offer detailing the reasons that the information should not be disclosed. Such reasons shall include the specific harm or prejudice which may arise from disclosure. The records manager of the Office of Procurement Services shall determine whether the identified information is confidential pursuant to the Maricopa County Procurement Code.

4.39 INTEGRATION

This contract represents the entire and integrated agreement between the parties and supersedes all prior negotiations, proposals, communications, understandings, representations, or agreements, whether oral or written, expressed, or implied.

4.40 UNIFORM ADMINISTRATIVE REQUIREMENTS

By entering into this contract, the contractor agrees to comply with all applicable provisions of Title 2, Subtitle A, Chapter II, Part 200—UNIFORM ADMINISTRATIVE REQUIREMENTS, COST PRINCIPLES, AND AUDIT REQUIREMENTS FOR FEDERAL AWARDS contained in Title 2 C.F.R. § 200 *et seq.*

4.41 GOVERNING LAW

This contract shall be governed by the laws of the State of Arizona. Venue for any actions or lawsuits involving this contract will be in Maricopa County Superior Court, Phoenix, Arizona.

4.42 FORCED LABOR

4.42.1 By submitting a bid for this solicitation and/or entering into a contract as a result of this solicitation, contractor agrees to comply with all applicable portions of Arizona Revised Statutes Section 35-394. Contracting; procurement; prohibition; written certification; remedy; termination; exception; definitions.

4.42.2 Contractor certifies that it does not currently, and agrees for the duration of the contract, that it will not use:

4.42.2.1 The forced labor of ethnic Uyghurs in the People's Republic of China.

4.42.2.2 Any goods or services produced by the forced labor of ethnic Uyghurs in the People's Republic of China.

4.42.2.3 Any contractors, subcontractors or suppliers that use the forced labor or any good or services produced by the forced labor of ethnic Uyghurs in the People's Republic of China.

4.42.3 If contractor becomes aware during the term of the agreement that contractor is not in compliance with this paragraph, the contractor shall notify the County within five business days after becoming aware of the noncompliance. If the contractor fails to provide a written certification to the County that the contractor has remedied the noncompliance within 180 days after notifying the County of its noncompliance, then the agreement terminates, except that if the agreement termination date occurs before the end the 180-day period, the agreement terminates on the agreement termination date.

CHANDLER arizona

Management Services, Purchasing Division

Sole Source or Competition Impracticable Procurement

TO: PURCHASING DIVISION DATE: 7/8/2025

FROM: Courtney Allen PHONE: 2812
(Name of Department Representative)
Library / Community Services
(Name of Division/Department)

SUBJECT: Sole Source or Competition Impracticable Procurement Request for the Purchase of:
OCLC Cloud Library

REQUESTED SUPPLIER: OCLC
SUPPLIER'S ADDRESS: 6565 Kilgour Place Dublin, OH 43017-3395

CONTACT: Brett Ward PHONE: 651-200-9917 COST ESTIMATE $ 140,000

REQUEST TYPE (check one):
X Sole Source Procurement
Competition Impracticable Procurement

STATEMENT OF NEED *(Provide background information, description of project, etc. to establish circumstances leading to request. Attach documents as appropriate to support statements.)*

OCLC CloudLibrary is a digital content platform that allows Chandler library patrons to access eBooks, audiobooks, and other eContent. OCLC Cloud Library is a cloud-based solution that offers seamless integration with existing library systems. We have been using OCLC Cloud Library for the past year, after OCLC acquired it from Bibliotheca. Prior to that, we had been using Bibliotheca Cloud Library for several years.

SOLE SOURCE OR COMPETITION IMPRACTICABLE JUSTIFICATION *(For Sole Source requests, describe the unique nature of the product or service, the efforts made to locate other sources, market testing and research results, and any other information that may help evaluate the request. For Competition Impracticable requests, describe the situation that makes competition impracticable, unnecessary or contrary to the public interest. Attach documents as appropriate to support this request.)*

OCLC is the only source from which Chandler Public Library may obtain CloudLibrary and CloudLink services, as well as obtain and integrate the following services into its CloudLibrary subscription: Comics Plus, NewsStand, Biblio+, Biblioboard and NoveList Reading Recommendations. Given the unique combination of product capabilities, content licensing, seamless integration with existing library infrastructure, and vendor support, OCLC Cloud Library is the sole source that meets the specific needs of our library system. Therefore, a sole source procurement is justified to ensure continued high-quality digital service to our patrons.

STATEMENT OF REQUESTOR

This request is based upon an objective review of the product or service required and appears to be in the best interest of the City. I know of no conflict of interest on my part. No gratuities, favors or compromising action have taken place. Neither has my personal familiarity with particular brands, types of equipment, materials or firms been a deciding influence on my request.

REQUESTOR

DATE: 7-28-2025

Signature Required

DIVISION HEAD:

DATE: 7/29/2025

Signature Required

DEPARTMENT DIRECTOR OR DESIGNEE

DATE: 7/29/2025

Signature Required

PURCHASING REVIEW AND RECOMMENDATION

Staff approves this purchase ~~was~~ as a sole source purchase. Please see attached sole source letter.

PURCHASING APPROVAL

PROCUREMENT OFFICER

DATE: 7/30/25

Signature Required

PURCHASING AND MATERIALS MANAGER:

DATE: 7/30/25

Signature Required

Via e-mail: Charles.jean@chandleraz.gov

June 19, 2025

Charles Jean
Mail Stop 601
PO Box 40008
Chandler, AZ 85244

RE: Sole Source Request

Thank you for your recent inquiry concerning the availability of OCLC, Inc.'s ("OCLC") CloudLibrary™ service ("CloudLibrary") and your participation in the AZ CloudLink group. OCLC's CloudLibrary is a digital content platform that allows your library's patrons to access eBooks, audiobooks, and other eContent. OCLC is the only source from which Chandler Public Library may obtain CloudLibrary and CloudLink services.

Further, OCLC is the only source from Chandler Public Library may obtain and integrate the following services into its CloudLibrary subscription: Comics Plus, NewsStand, Biblio+, Biblioboard and NoveList Reading Recommendations.

OCLC is the only source from which Chandler Public Library may obtain this OCLC Service.

OCLC looks forward to being of continued service to the Chandler Public Library.

Please let me know if you need any additional information.

Sincerely,

OCLC, INC.

By: _____
Eric van Lubeek
Chief Revenue Officer and
Managing Director, EMEA/APAC

City Council Memorandum Community Services Memo No. CP26-017

Date: September 15, 2025
To: Mayor and Council
Thru: John Pombier, Acting City Manager
Ryan Peters, Deputy City Manager
John Sefton, Community Services Director
Daniel Haskins, Capital Projects Division Manager
Mickey Ohland, Community Services Planning Manager

From: Alyssa Siqueiros, Construction/Design Project Manager
Subject: Construction Manager at Risk (CMAR) Pre-Construction Services Agreement No. PR2401.251 with Hunter Contracting Co., for the Mesquite Groves Park – Pre-Construction

---

Proposed Motion:

Move City Council award CMAR Pre-Construction Services Agreement No. PR2401.251 to Hunter Contracting Co., for the Mesquite Groves Park – Pre-Construction, in an amount not to exceed $319,800.68.

Background/Discussion:

In 2002, the City of Chandler purchased 100 acres on the northwest corner of Val Vista Drive and Riggs Road for the development of a future community park (Mesquite Groves). In 2008, the Mesquite Groves Aquatic Center (5901 S. Hillcrest Dr.) was constructed on approximately 10 acres of the park site. With the population and development in southeast Chandler steadily increasing over the years, additional recreational facilities are needed in this area of the city. Additionally, the Parks Strategic Master Plan (2021) identified the development of Mesquite Groves Park as a high priority and was one of the most requested items in a survey of residents.

In 2009, the city developed a conceptual master plan for the site. In January 2024, the City Council approved a professional services agreement with J2 Engineering & Environmental Design (J2) to review the existing master plan and update it to

meet the current needs of the city. As with all City of Chandler park development/renovation projects, public meetings played an important role in assuring that the ideas, issues, and/or concerns of Chandler citizens are heard and reflected in the updated Mesquite Groves Park Master Plan.

In March 2025, the City Council approved a professional services agreement with J2 to develop the overall park design documents, which is ongoing. A Construction Manager at Risk (CMAR) was advertised in April 2025, and Hunter Contracting Co. was selected. The project will be constructed in phases over the next 10 years, as budgeted in the 2026-2035 Capital Improvement Plan.

This pre-construction services agreement will consist of schedule development, stakeholder coordination, utility review and planning, constructability reviews and recommendations, value engineering reviews, phased cost modeling, development of multiple Guaranteed Maximum Price (GMP) proposals, and site investigations. The agreement completion time is 750 calendar days following Notice to Proceed.

Evaluation:

The selection process was followed in accordance with city policy and procedure and state law. Staff recommends an agreement award to Hunter Contracting Co., based on qualifications, relevant firm experience, team experience, project understanding, and project approach.

Fiscal Impact

Account No.	Fund Name	Program Name	Dollar Amount	CIP Funded Y/N
427.4580.6210.6PR396	Parks SE Impact Fees	Mesquite Groves Park Site	$319,800.68	Y

Attachments

Location Map

Agreement

CHANDLER arizona

MESQUITE GROVES PARK
PROJECT NO. PR2401.251

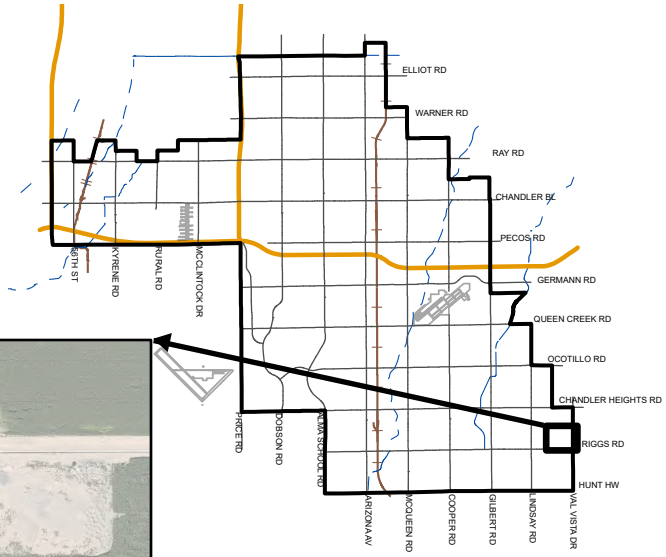

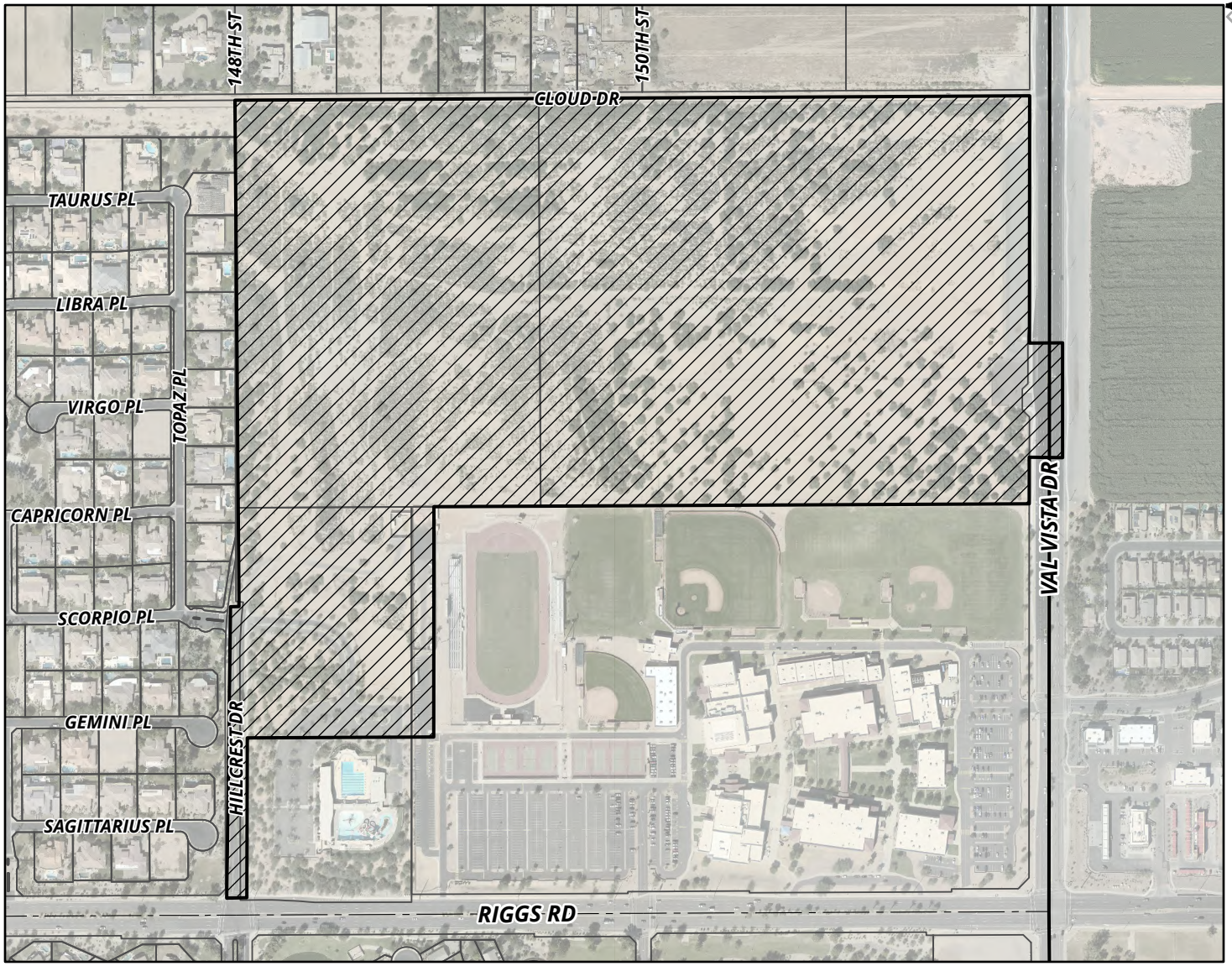

MEMO NO. CP26-017

PROJECT LIMITS

NTS

ChanGIS

F:\ENGINEER\GENSERV_ArcGISPro_Shared\Map Requests\Capital Projects\2025\CP25-090\CP25-090.aprx 1/10/2025 CameronK

Docusign Envelope ID: 8BAB3782-3942-4079-A0AA-BE0EB9A8D601

CITY OF CHANDLER, ARIZONA

MESQUITE GROVES PARK
CITY PROJECT NO. PR2401.251

PRE-CONSTRUCTION SERVICES AGREEMENT

(CONSTRUCTION MANAGER AT RISK)

Daniel Haskins

Daniel Haskins, P.E.
CIP City Engineer

Docusign Envelope ID: 8BAB3782-3942-4079-A0AA-BE0EB9A8D601

CITY OF CHANDLER, ARIZONA

MESQUITE GROVES PARK
CITY PROJECT NO.: PR2401.251

TABLE OF CONTENTS

ARTICLE 1 - PARTICIPANTS AND PROJECT 1

ARTICLE 2 - AGREEMENT DOCUMENTS 3

ARTICLE 3 - PRE-CONSTRUCTION SERVICES 3

ARTICLE 4 - CONSTRUCTION SERVICES 5

ARTICLE 5 - CITY FURNISHED INFORMATION 5

ARTICLE 6 - AGREEMENT TIME 6

ARTICLE 7 - AGREEMENT PRICE 6

ARTICLE 8 – FORCED LABOR OF ETHNIC UYGHURS PROHIBITED 6

EXHIBIT A – PRE-CONSTRUCTION SCOPE OF WORK AND SCHEDULE A-1
EXHIBIT B – COMPENSATION AND FEE SCHEDULE B-1
EXHIBIT C – INSURANCE REQUIREMENTS C-1
EXHIBIT D – SUBMITTAL REQUIREMENTS FOR GMP/PRICE PROPOSAL D-1
EXHIBIT E – GENERAL CONDITIONS E-1

Docusign Envelope ID: 8BAB3782-3942-4079-A0AA-BE0EB9A8D601

CONSTRUCTION MANAGER AT RISK
PRE-CONSTRUCTION SERVICES AGREEMENT
PROJECT NO.: PR2401.251

This Agreement (the "AGREEMENT") is made and entered into on the _____ day of _____, 2025, ("Effective Date") by and between City of Chandler, an Arizona municipal corporation, hereinafter called "City" and Hunter Contracting Co. the "Construction Manager at Risk" or "CM@Risk" designated below (City and CM@Risk may individually be referred to as "Party" and collectively referred to as "Parties").

City and CM@Risk agree as follows:

ARTICLE 1 - PARTICIPANTS AND PROJECT

CITY: **CIP City Engineer: Daniel Haskins, P.E.**
Public Works & Utilities Department
P.O. Box 4008, Mail Stop 407 Chandler, AZ 85244-4008
Phone: 480-782-3335 Email: Daniel.haskins@chandleraz.gov

CITY: **Construction Project Manager: Jason Garcia**
Public Works & Utilities Department
P.O. Box 4008, Mail Stop 407, Chandler, AZ 85244-4008
Phone: 480-782-3453 Email: Jason.Garcia@chandleraz.gov

CM@RISK:

Legal Company Name:	Hunter Contracting Co.
Mailing Address:	701 North Cooper Rd. Gilbert AZ 85233
Physical Address:	701 North Cooper Rd. Gilbert AZ 85233
Arizona Roc No.:	ROC070961
Federal Tax Id No.:	86-0172434
State Where Organized:	Arizona
Business Organization:	S. Corporation
Statutory Agent Name:	WA Service LLC
Statutory Agent Mailing Address:	2555 E Camelback Rd Ste. 800 Phoenix, AZ 85016
Statutory Agent Physical Address:	2555 E Camelback Rd Ste. 800 Phoenix, AZ 85016

CM@Risk's Authorized Project Representative:

Name:	Michael Gonzales
Title:	Project Manager
Phone:	602-541-0671
Email:	michaelg@huntercontracting.com

Docusign Envelope ID: 8BAB3782-3942-4079-A0AA-BE0EB9A8D601

PROJECT DESCRIPTION:

As part of the pre-construction effort for the Mesquite Groves Park project, the contractor will participate in stakeholder coordination, value engineering, comment resolution, and GMP negotiation meetings, provide constructability review of the design documents at milestone submittals, develop a preliminary construction schedule, provide recommendations regarding long lead items/equipment, perform potholing as needed, and prepare cost models and various GMPs.

PROJECT LOCATION:

Northwest Corner of Val Vista Drive and Riggs Road.

ARTICLE 2 - AGREEMENT DOCUMENTS

2.1 AGREEMENT DOCUMENTS

The Agreement between City and CM@Risk will consist of the following Agreement Documents:

1. This Pre-Construction Services Agreement and all of its Exhibits, incorporated by reference;
2. **Exhibit A** – Pre-Construction Scope of Work and Schedule;
3. **Exhibit B** – Compensation and Fee Schedule;
4. **Exhibit C** – Insurance Requirements;
5. **Exhibit D** – Submittal Requirements for GMP/Price Proposal;
6. **Exhibit E** - General Conditions and General Conditions Appendices.

2.2 DEFINITIONS

The definitions in Sections 2 and 15.1 of the General Conditions apply to all the Agreement Documents, including this Agreement.

ARTICLE 3 - PRE-CONSTRUCTION SERVICES

3.1 SERVICES

CM@Risk must provide all of the services and perform in accordance with Section 17 of the General Conditions. The major components of Pre-Construction Services and the corresponding subsections of Section 17 of the General Conditions are set forth below.

3.2 GENERAL REQUIREMENTS

3.2.1 CM@Risk must perform the services required by, and in accordance with this Agreement and as outlines in the attached **Exhibit A** to the satisfaction of the Project Manager, in full compliance with Section 17.2.1 of the General Conditions.

3.2.2 In performance of the Services under this Agreement, the CM@Risk must fully comply with all applicable Laws, Regulations, or Legal Requirements applicable to City, the Project, and the Agreement.

3.2.3 CM@Risk must perform the Services under this Agreement using only those firms, team members, and individuals designated by CM@Risk consistent with the Statement of Qualifications or as otherwise approved by City in accordance with the General Conditions. No other entities or individuals may be used without the prior written approval of City.

3.2.4 CM@Risk will comply with all terms and conditions of the General Conditions.

3.2.5 In the event of a conflict between this Agreement and the General Conditions or any exhibit hereto or appendix thereto, the terms of this Agreement will control.

3.2.6 **Ownership of Work Product**. Notwithstanding anything to the contrary in this Agreement, all Work Product prepared or otherwise created in connection with the performance of this Agreement, including the Work, are to be and remain the property of City, as set forth in Section 17.2.6 of the General Conditions.

3.3 **DESIGN PROJECT SCHEDULE**

CM@Risk must prepare and present to City a Detailed Project Schedule that is acceptable to the City and in accordance with Section 17.3 of the General Conditions.

3.4 **DESIGN DOCUMENT REVIEW**

CM@Risk must conduct the evaluations, perform the design document reviews, make the recommendations, and provide the other Services referenced in accordance with Section 17.4 of the General Conditions.

3.5 **BASELINE COST MODEL, DETAILED COST ESTIMATES, AND SCHEDULE OF VALUES**

3.5.1 CM@Risk must prepare and submit the Baseline Cost Model, Detailed Cost Estimates, and Schedule of Values in accordance with Section 17.5 of the General Conditions.

3.5.2 The submitted Baseline Cost Model, Detailed Cost Estimates, and Schedule of Values must not exceed the City's Construction Budget, which is **$78,000,000** or a higher amount as revised by the City ("Construction Budget"). If CM@Risk submits a Baseline Cost Model, Detailed Cost Estimates, and Schedule of Values that exceeds the Construction Budget, negotiations could lead to termination or suspension of the Agreement.

3.6 **SUBCONTRACTOR AND MAJOR SUPPLIER SELECTIONS**

CM@Risk must select and obtain approval of Subcontractors and Suppliers in accordance with Section 17.6 of the General Conditions.

3.7 **GUARANTEED MAXIMUM PRICE (GMP) PROPOSAL**

3.7.1 CM@Risk must submit a GMP Proposal for the entire Work, and for each phase (if required) of the Work, at the times set forth in the Pre-Construction Schedule included in attached. The GMP Proposal must be presented in a format acceptable to City based upon the attached **Exhibit D**. City may change the schedule, format, and/or requirements for the GMP Proposal as it deems necessary during Pre-Construction, and may request resubmittal of the GMP Proposal to reflect such changes.

3.7.2 Preparation, submittal, review, and approval (or disapproval, if applicable) of the GMP Proposal will be done in accordance with Section 17.7 of the General Conditions.

3.7.3 For the purposes of the GMP Proposal, the Parties agree that:

a. The CM@Risk Fee will be equal to **7.5%** (percent) of the Cost of Work;

Docusign Envelope ID: 8BAB3782-3942-4079-A0AA-BE0EB9A8D601

b. General Conditions costs will be a fixed amount or percentage agreed to as part of the Baseline Cost Model.

3.7.4 The GMP Proposal must not exceed the City's Construction Budget.

3.8 **ADDITIONAL PRE-CONSTRUCTION SERVICES**

3.8.1 Additional services which are outside the scope of the services required under the Agreement Documents will not be performed by CM@Risk without prior written authorization from City. Additional services, when authorized by an executed written Change Order under Section 9 of the General Conditions, will be compensated for by a fee mutually agreed upon in such written Change Order between City and CM@Risk.

3.8.2 No claim for additional services, extra work done or materials furnished by CM@Risk will be allowed by City except as provided herein, nor will CM@Risk provide any additional services, do any work, or furnish any materials(s) not covered by this Agreement unless such work or material is first authorized in writing by City. Work or material(s) furnished by CM@Risk without such prior written authorization will be CM@Risk's sole jeopardy, cost, and expense, and CM@Risk hereby agrees that without prior written authorization no claim for compensation for such services, work or materials furnished will be made, and City will not be responsible for such costs.

3.8.3 No Work (as defined by Section 1 of the General Conditions) may be performed under this Pre-Construction Services Agreement, without prior written approval by City. As an example, all procurement of long lead time items that must be procured to support the construction schedule or site investigative Work necessary to complete Pre-Construction Services, if done by the CM@Risk, will be performed only after a GMP Proposal for the Work has been approved and accepted in writing by City and all such Work will be done only under an executed Agreement for Construction Services, or pursuant to a prior written direction from City to engage in such procurement.

ARTICLE 4 - CONSTRUCTION SERVICES

If City accepts CM@Risk's GMP Proposal, CM@Risk and City will enter a Construction Services Agreement for Construction of the Project based upon CM@Risk's Pre-Construction Services performed and GMP Proposal submitted pursuant to this Agreement. The terms of the Construction Services Agreement are being negotiated contemporaneously with this Agreement and CM@Risk agrees to execute the Construction Services Agreement, without further modification, upon acceptance by City of the GMP Proposal. All of CM@Risk's obligations, duties and warranties in relation to Pre-Construction Services and Deliverables (including specifically the GMP Proposal) survive the completion of this Agreement and will be incorporated into the Construction Services Agreement.

ARTICLE 5 - CITY FURNISHED INFORMATION

5.1 City, at no cost to CM@Risk, will furnish the following to CM@Risk:

5.1.1 One copy of data in City's possession or control which City determines in its discretion to be pertinent to the Work. However, CM@Risk will be responsible for searching the records and requesting information it deems reasonably required for the Project.

5.1.2 Electronic copies of programs, reports, drawings, and specifications reasonably required by CM@Risk, to the extent in possession of City.

ARTICLE 6 - AGREEMENT TIME

Agreement Duration is **750** Calendar Days. The Pre-Construction Services described in this Agreement must be performed by CM@Risk in accordance with the Pre-Construction Schedule set forth in attached **Exhibit A**, as updated and expanded in the most current updated/revised and approved Detailed Project Schedule. Failure on the part of CM@Risk to adhere to the Pre-Construction Schedule requirements for activities for which it is responsible and in control will be deemed a material breach and sufficient ground for termination for cause of this Agreement by City.

ARTICLE 7 - AGREEMENT PRICE

7.1 In exchange for CM@Risk's full, timely, and acceptable performance of the Services under this Agreement, and subject to all of the terms of this Agreement, City will pay CM@Risk a fee of **$319,800.68** (the "Agreement Price"). The method of payment for this Agreement is Hourly, Not-to-Exceed. The amount paid will not exceed the Agreement Price for actual costs incurred, based on the negotiated hourly rates and reimbursement schedule as defined in **Exhibit B**, Compensation and Fee Schedule.

7.2 The Agreement Price is all-inclusive, and City will not pay any additional amounts, costs or expense, except for only those specifically designated reimbursable costs, without markup, as set forth in **Exhibit B**.

ARTICLE 8 - FORCED LABOR OF ETHNIC UYGHURS PROHIBITED

8.1 By entering into this Agreement, Contractor certifies and agrees Contractor does not currently use and will not use for the term of this Agreement: (i) the forced labor of ethnic Uyghurs in the People's Republic of China; or (ii) any goods or services produced by the forced labor of ethnic Uyghurs in the People's Republic of China; or (iii) any contractors, subcontractors or suppliers that use the forced labor or any goods or services produced by the forced labor of ethnic Uyghurs in the People's Republic of China.

SIGNATURE PAGE TO FOLLOW

Docusign Envelope ID: 8BAB3782-3942-4079-A0AA-BE0EB9A8D601

IN WITNESS WHEREOF, the parties hereto have executed this Agreement through their duly authorized representatives and bind their respective entitles as of the Effective Date.

"CITY" CITY OF CHANDLER

Mayor

RECOMMENDED BY:

Daniel Haskins August 19, 2025

Daniel Haskins, P.E.
CIP City Engineer

APPROVED AS TO FORM:

City Attorney JMB

ATTEST:

City Clerk Seal

"CM@Risk"
HUNTER CONTRACTING CO.

Dig Karki August 19, 2025

Signature Date

Dig Karki

Print Name

Sr. Vice President

Title

digk@huntercontracting.com

Signer Email Address

Docusign Envelope ID: 8BAB3782-3942-4079-A0AA-BE0EB9A8D601

EXHIBIT A

PRE-CONSTRUCTION SERVICES
SCOPE OF WORK AND SCHEDULE

Docusign Envelope ID: 8BAB3782-3942-4079-A0AA-BE0EB9A8D601

Exhibit A
CM@RISK PRE-CONSTRUCTION SERVICES
SCOPE OF WORK
PROJECT NAME: Mesquite Groves Park
PROJECT NUMBER: PR2401.251

Note: The sections below are numbered to correspond with General Conditions, Section 17 – Provisions Applicable Solely to Pre-Construction Services for Construction Manager at Risk. This proposal is for Phases 1, 2, and 3 in accordance with the "PR 2401.202 Mesquite Groves Park – Preliminary Schedule (Combined Phase 1&2)" dated 02/12/25 by J2 Design.

17.2 – GENERAL

Project Kick-off Meeting

Attend and participate in Project Kick-off meeting to discuss initial scope and budget requirements. A Schedule of Values for the project may be developed in this meeting.

Stakeholders and Public Agencies Meetings

Attend and participate, as may be appropriate, in meetings related to the Project with Stakeholders and Public Agencies.

Project/Design Meetings

Participate in bi-weekly Project/Design meetings.

Project Workshops/Design Workshops

Participate in three Project Workshops and Design Workshops and/or other miscellaneous meetings and partnering sessions as required by City. Most likely to be for the playground, splashpad, and skate plaza. CM@Risk will provide input consistent with sound and generally accepted construction management and contracting practices related to the procurement, cost impact, schedule, quality, and operations/maintenance.

Value Engineering Review Meetings

Participate in Value Engineering Review meetings or Value Engineering workshops. The Project Team will routinely assist in identifying and evaluating, using engineering principles, any alternate systems, approaches, and design changes that have the potential to reduce Project costs while still delivering a quality and functional product that meets the design intent.

Utility Coordination Meetings

Participate in Utility Coordination meetings. CM@Risk will attend, make presentations, and participate as may be appropriate, in Utility Coordination meetings related to the Project.

Comment Resolution Meetings

Participate in meetings with the Consultants and City to review constructability/bid-ability comments after design submission for 30%, 60% and 90% design.

GMP Review/Negotiation Meetings

Participate in meetings with City to review the GMP's after submission.

Docusign Envelope ID: 8BAB3782-3942-4079-A0AA-BE0EB9A8D601

17.3 – DETAILED PROJECT SCHEDULE

Develop Preliminary Construction Schedule & Phasing Plans

Preparation of the project schedule, including incorporating the design schedule, preconstruction and construction activities (including long-lead procurement), and key project milestones. The Project Schedule will use the Critical Path Method (CPM) technique, unless required otherwise. phase.

Long Lead Analysis and Recommendations

Identify all long lead time materials, fabrications, equipment or other items which may impact the Project Schedule and may require early action on the part of the Project Team including dates required for selecting and procuring such items.

17.4 – DESIGN DOCUMENT REVIEWS

Constructability and Bid-ability Reviews

Perform reviews and provide written comments on the project design submittals and for construction drawings, construction documents, various analyses, and studies and investigations conducted for the design of the Project. Includes, but is not limited to, review and evaluate Design Development documents for clarity, consistency, completeness, and ease of construction in order to achieve the overall objective of the Project. Review prior project as-built plans. Evaluate construction safety issues and proposals of construction safety improvements, as may be applicable. CM@Risk will evaluate whether: (a) the Drawings and Specifications are configured to enable efficient construction; (b) design elements are standardized; (c) construction efficiency is properly considered in the Drawings and Specifications; (d) the design promotes accessibility of personnel, material and equipment, and facilitates construction under adverse weather conditions; (e) sequences of Work required by or inferable from the Drawings and Specifications are practicable; and (f) the design has taken into consideration, efficiency issues concerning access and entrance to the site, lay down and storage of materials, staging of site facilities, construction parking, and other similar pertinent issues. Review comments will be compiled at each of the following design phase milestones: 30%, 60% and 90%.

Value Analysis/Efficiency Analysis

Evaluate periodically the availability of labor, materials/equipment, cost-sensitive aspects of the design; and other factors that may create an unacceptable variance to the Baseline Cost Model and/or Baseline Project Schedule; use established value analysis principles in recommending cost effective alternatives. Cost is included with Constructability and Bid-ability Reviews.

Utility Design Review and Comment

Perform reviews and provide written comments on the utility relocation and design submittals and for coordination with the design development for construction of the Project. Cost is included with Constructability and Bid-ability Reviews.

Docusign Envelope ID: 8BAB3782-3942-4079-A0AA-BE0EB9A8D601

Document Complementary Review and Cross Checks

Perform reviews and provide written comments regarding the bid-ability of the Project. CM@Risk will check cross-references and complementary Drawings and sections within the Specifications, and in general evaluate whether (a) the Drawings and Specifications are sufficiently clear and detailed to minimize ambiguity and to reduce scope interpretation discrepancies; (b) named materials and equipment are commercially available and are performing well or otherwise in similar installations; (c) Specifications include alternatives in the event a requirement cannot be met in the field; and (d) in its professional opinion, the Project is likely to be subject to differing site conditions. Review comments will be compiled at each of the following design phase milestones: 30%, 60% and 90%. Cost is included with Constructability and Bid-ability Reviews. Cost is included with Constructability and Bid-ability Reviews.

Maintenance of Plant Operations (MOPOs)

Evaluate scope and design for tasks that have the potential to effect plant operations; lead development of planning to minimize or eliminate disruption to Owner's facilities.

Utility/Site Investigations

See allowances.

17.5 – BASELINE COSTS MODEL, DETAIL COST ESTIMATE, SCHEDULE OF VALUES

30% Cost Model (Baseline Cost Model)

Upon receipt of acceptable 30% drawings, CM@Risk will review all available information regarding design and scope of the Project using the CM@Risk's experience in performing similar work, knowledge of similar projects, and current and projected construction costs and based upon that review, must develop a Baseline Cost Model for review by the Project Team and approval by City. At this stage of cost modeling CM@Risk will prepare and submit Schedule of Values for review by the Project Team and approval by City.

60% and 90% Cost Model

Upon receipt of acceptable drawings and specifications, CM@Risk will review all available information regarding the design and scope of the Project using CM@Risk's experience in performing similar work, knowledge of similar projects and current and projected construction costs and, based upon that review, must update the Cost Model for review by the Project Team and approval by City. At these stages of cost modeling CM@Risk will update Schedule of Values as needed for review by the Project Team and approval by City.

Continuous Cost Model/Estimate Updates (Design Evolution Log)

Track, estimate/price, and address the Project Team's overall project cost issues that arise outside of the Baseline Cost Model and the latest approved Detailed Cost Estimate such as: City generated changes, Project Team proposed changes, alternate system analysis, constructability items and value engineering analysis. Cost is included with Cost Modeling.

Docusign Envelope ID: 8BAB3782-3942-4079-A0AA-BE0EB9A8D601

Cash Flow Projections

Prepare and submit cash flow projections upon request by City.

17.7 – GMP PROPOSAL

Early Material-Equipment Procurement/Early GMP Preparation

Identify long-lead materials/equipment that will greatly improve schedule if procured in an early GMP; identify early scopes of work such as tree salvage, mass excavation and other infrastructure scopes, such as underground utility work with Owner and Project Designer in developing required Agreement Documents to facilitate the GMP(s).

GMP Preparation and Submission

Prepare and submit the GMP Proposal in accordance with City's request for GMP Proposal requirements based on the most current completed Drawings and Specifications at that time, which unless otherwise directed by City in writing, will be at 100% Construction Drawings. Preparation and submission of phased GMP Proposals submitted for the Project as well as the preparation and inclusion of a detailed list of recommended subcontractors and summary of the selection process are included in this item.

17.8 – PAYMENT PROCEDURE FOR PRE-CONSTRUCTION SERVICES

Monthly Progress Reports/Request for Payment

Prepare and submit monthly requests for payment accompanied by a progress report, detailed invoices and receipts, if applicable.

ALLOWANCE ITEMS

Site Utility Investigations (Potholing) – Allowance

An allowance to participate in site investigations and utility potholing as deemed necessary to pothole, identify, and record existing utilities to avoid conflicts during design planning (if required or not performed by the Project Designer).

Owner's Allowance

A 10% allowance to be used as directed by City.

Docusign Envelope ID: 8BAB3782-3942-4079-A0AA-BE0EB9A8D601

EXHIBIT B

COMPENSATION AND FEE SCHEDULE

Docusign Envelope ID: 8BAB3782-3942-4079-A0AA-BE0EB9A8D601

EXHIBIT B
CM@RISK PRE-CONSTRUCTION SERVICES
FEE PROPOSAL
PROJECT NAME: Mesquite Groves Park
PROJECT NUMBER: PR2401.251
DATE: 7/30/2025

	Hours	Cost
17.2 - GENERAL	**292**	**$36,490.53**
Project Kick-off Meeting	4	$500.30
Stakeholders and Public Agencies Meetings	48	$6,003.59
Project/Design Meetings	80	$10,005.98
Project Workshops/Design Workshops	12	$1,500.90
Value Engineering Review Meetings	12	$1,500.90
Utility Coordination Meetings	24	$3,001.80
Comment Resolution Meetings	80	$10,005.98
GMP Review/Negotiation Meetings	12	$1,500.90
Project/Design Meetings, Phase 3	20	$2,470.18
17.3 - DETAILED PROJECT SCHEDULE	**96**	**$11,031.58**
Develop Preliminary Construction Schedule & Phasing Plans	80	$9,192.98
Long Lead Analysis and Recommendations	16	$1,838.60
17.4 - DESIGN DOCUMENT REVIEWS	**640**	**$75,502.76**
Constructability and Bid-ability Reviews and will also include:		
Value Analysis/Efficiency Analysis		
Utility Design Review and Comment		
Document Complementary Review and Cross Checks	600	$70,798.80
Maintenance of Plant Operations (MOPOs)		
Utility/Site Investigations (see allowances)		
Constructability and Bid-ability Reviews as described above for Phase 3	40	$4,703.96
17.5 - BASELINE COSTS MODEL, DETAIL COST EST, SCHEDULE OF VALUES	**993**	**$115,997.48**
30% Cost Model (Baseline Cost Model)	153	$17,894.97
60% and 90% Cost Model	612	$71,579.88
Continuous Cost Model/Estimate Updates	128	$14,970.96
Cash Flow Projections	10	$1,169.61
Cost Models, Estimating, Schedule of Values for Phase 3	90	$10,382.07
17.7 - GMP PROPOSALS	**186**	**$22,297.37**
Early Equipment/Early GMP Preparation	25	$3,006.82
GMP Preparation and Submission	125	$15,034.09
GMP Preparation and Submission, Phase 3	36	$4,256.46
17.8 - PAYMENT PROCEDURE FOR PRE-CONSTRUCTION SERVICES	**12**	**$1,500.90**
Monthly Progress Reports/Request for Payment	12	$1,500.90
SUBTOTAL:		**$262,820.62**

	Hours	Cost
REIMBURSABLES & ALLOWANCES		**$56,980.07**
Site Utility Investigations (Potholing)		$25,000.00
Owner's Allowance, 10%		$31,980.07
TOTAL:		**$319,800.68**

Docusign Envelope ID: 8BAB3782-3942-4079-A0AA-BE0EB9A8D601

EXHIBIT C

INSURANCE REQUIREMENTS

1. General.

1.1 At the same time as execution of this Agreement, CM@Risk must furnish City a certificate of insurance on a standard insurance industry ACORD form. The ACORD form must be issued by an insurance company authorized to transact business in the State of Arizona possessing a current A.M. Best, Inc. rating of A-7, or better and legally authorized to do business in the State of Arizona with policies and forms satisfactory to City. Provided, however, the A.M. Best rating requirement will not be deemed to apply to required Workers' Compensation coverage.

1.2 CM@Risk and any of its subconsultants must procure and maintain, until all of their obligations have been discharged, including any warranty periods under this Agreement are satisfied, the insurances set forth below.

1.3 The insurance requirements set forth below are minimum requirements for this Agreement and in no way limit the indemnity covenants contained in this Agreement.

1.4 City in no way warrants that the minimum insurance limits contained in this Agreement are sufficient to protect CM@Risk from liabilities that might arise out of the performance of the Agreement services under this Agreement by CM@Risk, its agents, representatives, employees, subconsultants, and CM@Risk is free to purchase any additional insurance as may be determined necessary.

1.5 Failure to demand evidence of full compliance with the insurance requirements in this Agreement or failure to identify any insurance deficiency will not relieve CM@Risk from, nor will it be considered a waiver of its obligation to maintain the required insurance at all times during the performance of this Agreement.

1.6 Use of subconsultants: If any work is subcontracted in any way, CM@Risk must execute a written Agreement with subconsultant containing the same Indemnification Clause and Insurance Requirements as City requires of CM@Risk in this Agreement. CM@Risk is responsible for executing the Agreement with the subconsultant and obtaining Certificates of Insurance and verifying the insurance requirements.

2. Minimum Scope and Limits of Insurance. CM@Risk must provide coverage with limits of liability not less than those stated below.

2.1 *Commercial General Liability-Occurrence Form*. CM@Risk must maintain "occurrence" form Commercial General Liability insurance with a limit of not less than $2,000,000 for each occurrence, $4,000,000 aggregate. Said insurance must also include coverage for products and completed operations, independent contractors, personal

Docusign Envelope ID: 8BAB3782-3942-4079-A0AA-BE0EB9A8D601

injury and advertising injury. If any Excess insurance is utilized to fulfill the requirements of this paragraph, the Excess insurance must be "follow form" equal or broader in coverage scope than underlying insurance.

2.2 *Automobile Liability-Any Auto or Owned, Hired and Non-Owned Vehicles*
Vehicle Liability: CM@Risk must maintain Business/Automobile Liability insurance with a limit of $1,000,000 each accident on CM@Risk owned, hired, and non-owned vehicles assigned to or used in the performance of CM@Risk's work or services under this Agreement. If any Excess or Umbrella insurance is utilized to fulfill the requirements of this paragraph, the Excess or Umbrella insurance must be "follow form" equal or broader in coverage scope than underlying insurance.

2.3 *Workers Compensation and Employers Liability Insurance*: CM@Risk must maintain Workers Compensation insurance to cover obligations imposed by federal and state statutes having jurisdiction of CM@Risk employees engaged in the performance of work or services under this Agreement and must also maintain Employers' Liability insurance of not less than $1,000,000 for each accident and $1,000,000 disease for each employee.

2.4 *Builders' Risk/Installation Floater Insurance.* The Contractor bears all responsibility for loss to all equipment or Work under construction. Unless waived in writing by the City the Contractor will purchase and maintain in force Builders' Risk/Installation Floater insurance on the entire Work until completed and accepted by the City. This insurance will be Special Causes of Loss policy form, (minimally including perils of fire, flood, lightning, explosion, windstorm and hail, smoke, aircraft and vehicles, riot and civil commotion, theft, vandalism, malicious mischief, and collapse), completed value, replacement cost policy form equal to the Agreement price and all subsequent modifications. The Contractor's Builders' Risk/Installation Floater insurance must be primary and not contributory.

Builders' Risk/Installation Floater insurance must cover the entire Work including reasonable compensation for architects and engineers' services and expenses and other "soft costs" made necessary by an insured loss. Builders' Risk/Installation Floater insurance must provide coverage from the time any covered property comes under the Contractor's control and or responsibility, and continue without interruption during course of construction, renovation and or installation, including any time during which any Project property or equipment is in transit, off Site, or while on Site for future use or installation. Insured property must include, but not be limited to, scaffolding, false work, and temporary buildings at the Site. This insurance must also cover the cost of removing debris, including demolition as may be legally required by operation of any law, ordinance, regulation or code.

The Contractor must also purchase and maintain Boiler and Machinery insurance with the same requirements as Builders' Risk/Installation Floater insurance cited above if the Work to be performed involves any exposures or insurable property normally covered under a Boiler and Machinery insurance policy or made necessary as required by law or testing requirements in the performance of this Agreement. The Contractor

Docusign Envelope ID: 8BAB3782-3942-4079-A0AA-BE0EB9A8D601

will be responsible for any and all deductibles under these policies and the Contractor waives all rights of recovery and subrogation against the City under the Contractor-Builders' Risk/Installation Floater insurance described herein.

Builders' Risk/Installation Floater Insurance must be maintained until whichever of the following first occurs: (i) final payment has been made; or, (ii) until no person or entity, other than the City, has an insurable interest in the property required to be covered. The Builders' Risk/Installation Floater insurance must be endorsed so that the insurance will not be canceled or lapse because of any partial use or occupancy by the City.

The Builders Risk/Installation Floater insurance must include as named insureds, the City, the Contractor, and all tiers of Subcontractors and others with an insurable interest in the Work who will be named as additional insureds unless they are able to provide the same level of coverage with the City and Contractor named as additional insureds. Certificates must contain a provision that the insurance will not be canceled or materially altered without at least 30 Days advance notice to the City. The City must also be named as a Loss Payee under the Builders' Risk/Installation Floater coverage. The Builders Risk/Installation Floater insurance must be written using the Special Causes of Loss policy form, replacement cost basis.

All rights of subrogation under the Builders Risk/Installation Floater insurance are, by this Agreement, waived against the City, its officers, officials, agents and employees.

The Contractor is responsible for payment of all deductibles under the Builders' Risk/Installation Floater insurance policy.

3. Additional Policy Provisions Required.

3.1 *Self-Insured Retentions or Deductibles.* Any self-insured retentions and deductibles must be declared and approved by City. If not approved, City may require that the insurer reduce or eliminate any deductible or self-insured retentions with respect to City, its officers, officials, agents, employees, and volunteers.

3.1.1. CM@Risk's insurance must contain broad form contractual liability coverage.

3.1.2. CM@Risk's insurance coverage must be primary insurance with respect to City, its officers, officials, agents, and employees. Any insurance or self-insurance maintained by City, its officers, officials, agents, and employees will be in excess of the coverage provided by CM@Risk and must not contribute to it.

3.1.3. CM@Risk's insurance must apply separately to each insured against whom claim is made or suit is brought, except with respect to the limits of the insurer's liability.

3.1.4. Coverage provided by CM@Risk must not be limited to the liability assumed under the indemnification provisions of this Agreement.

EXHIBIT C

3.1.5. The policies must contain a severability of interest clause and waiver of subrogation against City, its officers, officials, agents, and employees, for losses arising from Work performed by CM@Risk for City.

3.1.6. CM@Risk, its successors and or assigns, are required to maintain Commercial General Liability insurance as specified in this Agreement for a minimum period of 3 years following completion and acceptance of the Work. CM@Risk must submit a Certificate of Insurance evidencing Commercial General Liability insurance during this 3 year period containing all the Agreement insurance requirements, including naming City of Chandler, its agents, representatives, officers, directors, officials and employees as Additional Insured as required.

3.1.7. If a Certificate of Insurance is submitted as verification of coverage, City will reasonably rely upon the Certificate of Insurance as evidence of coverage but this acceptance and reliance will not waive or alter in any way the insurance requirements or obligations of this Agreement.

3.2. *Insurance Cancellation During Term of Agreement.*

3.2.1. If any of the required policies expire during the life of this Agreement, CM@Risk must forward renewal or replacement Certificates to City within 10 days after the renewal date containing all the required insurance provisions.

3.2.2. Each insurance policy required by the insurance provisions of this Agreement must provide the required coverage and must not be suspended, voided or canceled except after thirty (30) days prior written notice has been given to City, except when cancellation is for non-payment of premium, then ten (10) days prior notice may be given. Such notice must be sent directly to Chandler Law-Risk Management Department, Post Office Box 4008, Mailstop 628, Chandler, Arizona 85225. If any insurance company refuses to provide the required notice, CM@Risk or its insurance broker must notify City of any cancellation, suspension, non-renewal of any insurance within seven (7) days of receipt of insurers' notification to that effect.

3.3 *City as Additional Insured*. The policies are to contain, or be endorsed to contain, the following provisions:

3.3.1. The Commercial General Liability and Automobile Liability policies are to contain, or be endorsed to contain, the following provisions: City, its officers, officials, agents, and employees are additional insureds with respect to liability arising out of activities performed by, or on behalf of, CM@Risk including City's general supervision of CM@Risk; Products and Completed operations of CM@Risk; and automobiles owned, leased, hired, or borrowed by CM@Risk.

Docusign Envelope ID: 8BAB3782-3942-4079-A0AA-BE0EB9A8D601

3.3.2. City, its officers, officials, agents, and employees must be additional insureds to the full limits of liability purchased by CM@Risk even if those limits of liability are in excess of those required by this Agreement.

EXHIBIT D

SUBMITTAL REQUIREMENTS FOR GMP/PRICE PROPOSAL
(Page 1 of 2)

1. Unless otherwise instructed, CM@Risk must submit 3 bound copies of any GMP Proposal(s) that includes the following documents, complies with the requirements specified in this Agreement and the following instructions. The GMP Proposal(s) must be organized as follows:

   A. Table of Contents
   B. Project Description
   C. GMP Proposal and the following attachments:
      i. Detailed Cost Estimate upon which the GMP is based and if for phased work, a total project Detailed Cost Estimate as of the time of the phased GMP Proposal.
      ii. List of Subcontractors
      iii. Schedule of Manufacturers and Suppliers
   D. Schedule of Values ("SOV")
   E. Project Schedule and a variance report to the Baseline Project Schedule
   F. Construction phasing/traffic control (if applicable)
   G. List of GMP Plans and Specifications

2. A summary breakdown of the GMP Proposal is shown on page 2 of this Exhibit, along with instructions regarding certain line items. The definitions included in Section 1 of the General Conditions apply to the line items, as appropriate, and set-forth the criteria to be used by CM@Risk in providing the required breakdown.

3. The most current version of CM@Risk's SOV must be submitted with the GMP Proposal. Supporting documents for the SOV, including the request for bids, copies of bids received, and clarification assumptions used for the particular bid item listed must be provided in an organized matter that correlates with the SOV.

4. The final accepted GMP must not include any clarifications/assumptions made by CM@Risk in the preparation of the GMP Proposal, unless any such clarification or assumption is agreed to in writing by City.

5. The most current version of CM@Risk's Detailed Project Schedule must be submitted with the GMP Proposal with a variance report from the project's Baseline Schedule. The Detailed Project Schedule must be prepared as specified in this Agreement.

6. A table listing all drawing sheets included in the GMP Plans and Specifications must be included with the GMP package. The table must include the following information: Sheet Number, Sheet Name, Sheet Version, and Date of Issuance. The GMP Proposal and Specifications, as defined, must be transmitted as specified in this Agreement.

NOTE: The submittal package must be kept as simple as possible all on 8 ½ x 11 sheets. Color or shading must be kept to a minimum. If used, make sure the color or shading will not affect the reproduction of the submittal in black and white.

Docusign Envelope ID: 8BAB3782-3942-4079-A0AA-BE0EB9A8D601

EXHIBIT D

CM@RISK GMP SUMMARY (PAGE 2 of 2)

Date: _____

City of Chandler Project Name: Mesquite Groves Park
City of Chandler Project No.: PR2401.251
Project Location: Northwest Corner of Val Vista Drive and Riggs Road

	Amount
A. Cost of Work	
A1 Cost of Work (self perform, no mark-up)	$0.00
A2 Cost of Work (subcontractors, suppliers, materialmen)	$0.00
TOTAL COST OF WORK:	**$0.00**
B. General Conditions	**$0.00**
SUBTOTAL 1 (Cost of Work) (A + B):	**$0.00**
C. CM@Risk's Fee	**$0.00**
SUBTOTAL 2 (A + B + C):	**$0.00**
D. Bonds and Insurance (on Subtotal 1)	
D1 Bonds (Payment and Performance)	$0.00
D2 Insurance	$0.00
TOTAL BONDS & INSURANCE:	**$0.00**
SUBTOTAL 3 (SUBTOTAL 2 + BONDS & INS):	**$0.00**
E. Sales Tax	
E1 Sales Tax	$0.00
E2 Tax Credits	$0.00
TOTAL SALES TAX:	**$0.00**
F. Approved Allowances	
F1 Owner's Allowance	$0.00
F2 Owner's Allowance for Water and Wastewater	$0.00
TOTAL ALLOWANCES:	**$0.00**
G. Contingencies	
G1	$0.00
G2	$0.00
TOTAL CONTINGENCIES:	**$0.00**
TOTAL GMP PROPOSAL:	**$0.00**

Establishment of Values:

a. Cost of Work (A) and Allowances (F) to be submitted with GMP Proposal.
b. General Conditions Cost (B) to be established in Baseline Cost Model.
c. CM@Risk Fee as set forth in Section 3.7.3 of this Contract

Docusign Envelope ID: 8BAB3782-3942-4079-A0AA-BE0EB9A8D601

EXHIBIT E
GENERAL CONDITIONS
AND
GENERAL CONDITIONS APPENDICES

Docusign Envelope ID: 8BAB3782-3942-4079-A0AA-BE0EB9A8D601

GENERAL CONDITIONS

Approved date: July 20, 2022

Docusign Envelope ID: 8BAB3782-3942-4079-A0AA-BE0EB9A8D601

TABLE OF CONTENTS

SECTION 1 - SCOPE OF THESE GENERAL CONDITIONS 3

SECTION 2 - GENERAL DEFINITIONS 3

SECTION 3 - STANDARD SPECIFICATIONS AND DETAILS 7

SECTION 4 - CONTRACTOR'S RESPONSIBILITIES FOR CONSTRUCTION SERVICES 8

SECTION 5 - CITY RESPONSIBILITIES 27

SECTION 6 - AGREEMENT TIME 29

SECTION 7 - AGREEMENT PRICE 35

SECTION 8 - PAYMENT 35

SECTION 9 - CHANGES TO THE AGREEMENT 40

SECTION 10 - SUSPENSION AND TERMINATION 43

SECTION 11 - INSURANCE AND BONDS 44

SECTION 12 - INDEMNIFICATION 49

SECTION 13 - DISPUTE RESOLUTION 49

SECTION 14 - MISCELLANEOUS PROVISIONS 50

SECTION 15 - PROVISIONS APPLICABLE SOLELY TO GMP AND COST-BASED AGREEMENTS, CHANGE ORDERS, AND JOB ORDERS 57

SECTION 16 - PROVISIONS APPLICABLE SOLELY TO JOB ORDER AGREEMENTS (JOC) 61

SECTION 17 - PROVISIONS APPLICABLE SOLELY TO PRE-CONSTRUCTION SERVICES FOR CONSTRUCTION MANAGER AT RISK 66

SECTION 18 - APPENDICES ..... APP-1 of 30

Appendix 1 – Policy Statement for Calculating Delays and Damages
Appendix 2 – Cost Reduction Incentive Proposals for Design Bid Build Agreements
Appendix 3 – Contractor's Affidavit Regarding Settlement of Claims
Appendix 4 – Forms of Performance Bond
Appendix 5 – Forms of Payment Bond
Appendix 6 – Dispute Resolution
Appendix 7 – Certificate of Completion
Appendix 8 – Construction Sign Detail
Appendix 9 – Cost of the Work (Applicable solely to Construction Manager at Risk and Job Order Contracting)
Appendix 10 Landscape Establishment Period

Docusign Envelope ID: 8BAB3782-3942-4079-A0AA-BE0EB9A8D601

SECTION 1 - SCOPE OF THESE GENERAL CONDITIONS

These General Conditions encompass provisions that apply, and are incorporated into all construction Agreements entered into by the City of Chandler, unless otherwise specifically excluded in the executed Agreement.

SECTION 2 - GENERAL DEFINITIONS

Allowance : A specific amount for a specific item of Work, if any, that City agrees has not been sufficiently designed, detailed, or selected (including design changes from 90% to 100% as authorized by and at the discretion of the City) at the time the Agreement Price is agreed to for Contractor to provide a definitive price.

Alternate Systems Evaluations or Alternative Analysis: Alternatives for design, means and methods or other scope considerations that are evaluated using value analysis principles and have the potential to reduce construction costs while still delivering a quality and functional Project that meets City requirements.

Change Order: A written instrument issued after execution of the Agreement Documents signed by City and Contractor, stating their agreement upon all of the following: the addition, deletion or revision in the scope of services or deliverables; the amount of the adjustment to the Agreement Price, the extent of the adjustment to the Agreement Time, or modifications of other agreement terms. The Agreement Price and the Agreement Time may be changed only by Change Order.

Consultant: Person or firm that provides professional services.

City (Owner or OWNER): City of Chandler, a municipal corporation, with whom Contractor has entered into the Agreement and for whom the Work or Services are to be provided pursuant to the Agreement(s).

Contingent Bid Items: This is a minor bid item which is likely, but not certain, to occur during the course of work. If the Engineer determines that this work is required, the Contractor will accomplish the work and payment will be made based on the contingent unit bid price included in the proposal. Since the quantity listed in the proposal is primarily for bid comparison, the amount of work required by the Engineer may vary materially from this.

Agreement: The written agreement executed between City and Contractor, including all of the Agreement Documents.

Agreement Documents: The documents which together form the Agreement between City and Contractor, as identified in Article 2 of the Agreement, or are otherwise incorporated into the Agreement, including the Agreement, the exhibits thereto, these General Conditions, any Notice to Proceed, and any Job Order (if applicable), the Plans and Specifications, Project Schedule, written and properly executed Change Orders, MAG Specifications and City's amendments thereto, and any other documents so designated in the Agreement.

Agreement Price: The agreed-upon price to be paid to Contractor for full, timely, and acceptable completion of the Work or Services under the terms of the Agreement.

Agreement Time(s): The number of calendar days or the dates related to the applicable phase, Substantial Completion, or Final Acceptance as stated in Agreement Documents. Agreement Time starts

Docusign Envelope ID: 8BAB3782-3942-4079-A0AA-BE0EB9A8D601

with the Notice to Proceed (NTP) and ends with Final Acceptance. The Agreement Time is set forth in the Agreement and is based upon the Project Schedule agreed to by City in writing.

Contractor: The person or business association with whom City has entered into an agreement for construction related Work or Services in relation to the Project at issue.

Contractor Payment Request: The form that is accepted by City and used by Contractor in requesting progress payments or final payment and which must include such supporting documentation as is required by the Agreement Documents or City.

Construction Budget: The City's budget for construction of the Project.

Construction Documents: The Plans, Specifications, and Drawings prepared and issued by the Design Professional and approved by City for construction, meaning the documents are sealed by the Design Professional (as required), acceptable for permitting and incorporated into the Agreement by this reference. All amendments and modifications to the Construction Documents must be approved in writing by City prior to incorporation into the Agreement.

Cost of the Work: The term Cost of the Work will mean costs necessarily incurred by Contractor in the proper performance of the Work. Such costs will be at rates not higher than the standard paid at the place of the Project except with prior consent of City.

Critical Path Method (CPM): A scheduling technique which identifies the logical sequence of the activities occurring in a Construction Project, the anticipated time required to complete each activity in the Project, and the activities that must be completed on schedule to finish the Project within the anticipated time. Typically, activities are arranged in a network that shows both activities and their dependencies. CPM is also used as a management technique which enables contracting parties to predict when activities may occur so that resources can be effectively used and limitations can be identified.

Critical Path: Critical Path is the sequence of project network activities which add up to the longest overall duration. Once established in the Project Schedule, the Critical Path for the Project must not be changed without prior written approval of City.

Day: Calendar day(s) unless otherwise specifically stated in the Agreement Documents.

Design Professional: The qualified, licensed person, firm or corporation who furnishes design and construction administration services required under the Agreement Documents. These services may include, but are not limited to: development of Construction Drawings and Documents, review of Contractor Submittal(s), review of and response to Requests for Information, approval and certification of progress payment applications, construction administration, and construction agreement close out.

Differing Site Conditions: Concealed or latent physical conditions or subsurface conditions at the Site that, (i) materially differ from the conditions indicated in the Agreement Documents, or (ii) are of an unusual nature, differing materially from the conditions ordinarily encountered and generally recognized as inherent in the Work at the general area of the Site. Caliche, rock, hard-digging or sandy/silty soil encountered on a project is not considered a "Differing Site Condition."

Drawings (Plans): Documents, which visually represent the scope, extent and character of the Work to be furnished and performed by Contractor during the construction phase and which have been prepared

Docusign Envelope ID: 8BAB3782-3942-4079-A0AA-BE0EB9A8D601

or approved by the Design Professional and City. These documents include Drawings that have reached a sufficient state of completion and released by Design Professional solely for the purposes of review and use in performing constructability or bid-ability reviews by Contractor and in preparing cost estimates (e.g. Master Planning and Programming, Schematic Design, Design Development, and Construction Drawings), but *"not for construction*." Shop Drawings are not Drawings as so defined.

Final Acceptance: The City's acceptance of the facility or project from the Contractor after all Work is completed, tested, and inspected in accordance with the Agreement requirements. Final Acceptance results in a Letter of Acceptance (LOA).

Fixed Price: A fixed price or amount for an Agreement Price, Scope of Work, materials, or other item under an Agreement, Change Order, or other agreement, which City agrees, in writing, to pay instead of the actual cost.

Float: The number of Days by which an activity can be delayed without lengthening the Critical Path and extending the Agreement Time. Unless otherwise expressly agreed in writing, all Float belongs to City.

Laws, Regulations, or Legal Requirements: Any and all applicable laws, rules, regulations, ordinances, codes and orders applicable to the Project of any and all governmental bodies, agencies, authorities and courts having jurisdiction and any applicable provisions of the Development Agreement for the Project (if any), including, without limitation, those provisions relating to the design and construction of the Project.

Line Item: The individual elements of Work identified on a bid or other schedule and associated with a price or a unit price and quantity particular to that individual element of the Work. Also refers to individual items of work within the Schedule of Values.

Liquidated Damages: Designated damages for the City to collect as compensation upon a specific breach (example: late delivery).

Long-Lead Item: Long-lead item refers to the equipment, product, or system that is identified at the earliest stage of a project to have a delivery time long enough to affect directly the Critical Path/the overall lead time of the project.

MAG: The Maricopa Association of Governments.

MAG Specifications: The most current version of the Uniform Standard Specifications for Public Works Construction published by MAG.

MAG Standard Details: The most current version of the Uniform Standard Details as published by MAG.

Minor change: A change in the Work having no impact on cost or time or the City-approved design intent, as determined by City.

Notice to Proceed (NTP): A written notice given by City to Contractor fixing the date on which Contractor will start to perform Contractor's obligations under the Agreement.

Project: The Project specified in the Agreement (including a Job Order).

Project Manager: The Project Manager designated in Article 1 of the Agreement, or any successor thereto

Docusign Envelope ID: 8BAB3782-3942-4079-A0AA-BE0EB9A8D601

designated by City. The Project Manager has the authority to act on behalf of City, as delineated and limited by the Agreement Documents and applicable law. And City will communicate with Contractor through the Project Manager. However, the Project Manager has no authority to bind City or City Council in contravention of any City code, State or Federal statute or regulation, or these General Conditions.

Project Schedule: The schedule for the completion of the Project agreed to and required by City.

Project Specific Conditions: Additional conditions which apply to the specific Project and Scope of Work which are set forth in Exhibit D of the Agreement.

Project Team: The Project Team consisting of the Design Professional, Contractor, Project Manager, and such others as City may designate.

Punch List: The list initially prepared by Contractor pursuant to the Agreement Documents, reviewed and supplemented by the Project Manager (and at the sole option of the Project Manager, the Design Professional) and approved by City containing items of incomplete work not impacting Substantial Completion, if allowed for under the Agreement, and to be completed or corrected by Contractor after Substantial Completion and before Final Acceptance in accordance with the Agreement Documents.

Quality Assurance (QA) Testing: Testing performed to verify the accuracy and applicability of the QC testing results and to ascertain that the materials installed meet the specified levels of quality in accordance with the Agreement Documents.

Quality Control (QC) Testing: Testing performed to assure that the materials installed comply with the requirements in the Agreement Documents.

Requests for Information (RFIs): Formal written request from Contractor to City or Design Professional for the Project seeking clarification or additional information needed for Contractor to properly complete the Work or Services under the Agreement. City may require RFI's to be submitted on a specific form or in a specified format.

Schedule of Values (SOV): The specified document prepared by Contractor, and approved and accepted by City, which divides the Agreement Price into pay items, such that the sum of all pay items equals the Agreement Price for the construction phase Work, or for any portion of the Work having a separate specified Agreement Price.

Scope of Work: The scope of work agreed to or required by City and incorporated into the Agreement as Exhibit A.

Shop Drawings: All drawings, diagrams, schedules and other data specifically prepared for the Work by Contractor or a Subcontractor, Sub-subcontractor, manufacturer, supplier or distributor to illustrate some portion of the Work.

Site: The land or premises on which the Project is located.

Specifications: The part(s) of the Agreement Documents for the construction phase consisting of written technical descriptions of materials, equipment, construction systems, standards and workmanship as applied to the Work and certain administrative details applicable thereto. Where specified, the Project must be constructed using the current Uniform Standard Specifications and Details for Public Works

Docusign Envelope ID: 8BAB3782-3942-4079-A0AA-BE0EB9A8D601

Construction as furnished by the Maricopa Association of Governments, as amended by City.

Subconsultant: A person, firm or corporation having an Agreement with Consultant/Contractor to furnish services required as its independent professional associate or consultant with respect to the Project.

Subcontractor: An individual or firm having a direct Agreement with Contractor or any other individual or firm having an Agreement with the aforesaid contractors at any tier, who undertakes to perform a part of pre-construction services or construction phase Work at the Site for which Contractor is responsible. Subcontractors must be selected through the Subcontractor selection process described in the Agreement Documents, if any.

Substantial Completion: The date when the City determines that the Work (or separable units of Phases as provided in the Agreement Documents) is essentially and satisfactorily complete in accordance with the Agreement Documents such that the Project is ready for use by the City for its intended purpose, opening to the general public, full occupancy or use by City (including, without limitation, all separate units, or rooms, facilities, access, income-generating areas, and all areas serving the general public, as applicable, must be ready for full operation without material inconvenience or discomfort), including, to the extent applicable to the Work, the following: all materials, equipment, systems, controls, features, facilities, accessories, and similar elements are installed in the proper manner and in operating condition, inspected, and approved; surfaces have been painted; masonry and concrete cleaned with any sealer or other finish applied; utilities and systems connected and functioning; site work complete; permanent heating, ventilation, air conditioning, vertical transportation, and other systems properly operating with proper controls; lighting and electrical systems installed, operable and controlled; paving completed, signage installed, and other work as applicable, has been performed to a similar state of essential and satisfactory completion.

Supplier: A manufacturer, fabricator, distributor, or vendor having a direct Agreement with Contractor or with any Subcontractor to furnish materials or equipment to be incorporated in the construction phase Work by Contractor or any Subcontractor.

Total Float: Number of Days by which pre-construction services or construction phase Work or any part of the same may be delayed without necessarily extending a pertinent Agreement Time or schedule milestone in the Project Schedule.

Work: The entire completion of construction or the various separately identifiable parts thereof, required to be furnished during the construction phase. Work includes and is the result of performing or furnishing labor and furnishing and incorporating materials, resources and equipment into the construction, and performing or furnishing services and documents as required by the Agreement Documents for the construction phase.

Writing: Typing, printing, photography and other modes of representing or reproducing words in a visible form, including email, and expressions.

SECTION 3 - STANDARD SPECIFICATIONS AND DETAILS

3.1 City operates under the latest revision of the MAG Specifications and MAG Standard Details as amended by City. City's current amendment to the MAG Specifications, part of the City's Unified Development Manual, may be found and downloaded from City's website at http://www.chandleraz.gov.

Docusign Envelope ID: 8BAB3782-3942-4079-A0AA-BE0EB9A8D601

3.2 Copies of the MAG Specifications and MAG Standard Details are available at the Maricopa Association of Governments office, 302 N. 1st Avenue, Suite 300, Phoenix, Arizona. They may also be downloaded from their website at: http://www.azmag.gov/Newsroom/Publications

3.3 The MAG Specifications and Standard Details and City's amendments thereto are incorporated into the Agreement by this reference.

SECTION 4 - CONTRACTOR'S RESPONSIBILITIES FOR CONSTRUCTION SERVICES

4.1 GENERAL

4.1.1 Contractor must construct the Work in accordance with the Agreement Documents and as outlined in Exhibit A of the Agreement to the satisfaction of City, exercising the degree of professional care, skill, diligence, quality and judgment that a professional construction manager engaged, experienced and specializing in the construction management of construction and facilities of similar scope, function, size, quality, complexity and detail in urban areas throughout the United States comparable to Chandler, Arizona would exercise at such time, under similar conditions. Contractor must, at all times, perform the Work in conformance with sound and generally accepted engineering principles and construction management and construction contracting practices.

4.1.2 If Contractor observes errors, discrepancies or omissions in the Agreement Documents, Contractor must promptly notify the Design Professional and City and request clarification. If Contractor, with the exercise of reasonable care, should have recognized such error, inconsistency, omission, or difference and fails to report it to City, and if Contractor proceeds with the Work affected by such observed errors, discrepancies or omissions, without receiving such clarifications, Contractor does so at its own risk and will be liable to City for damages resulting from proceeding without clarification.

4.1.3 Project Team and agents of each of them, testing agencies and governmental agencies with jurisdictional interests will be provided access to the Work at reasonable times for their observation, inspection, and testing. Contractor must provide proper and safe conditions for such access.

4.1.4 Contractor must comply with, and require all Subcontractors to comply with, the Arizona Contractors' license laws, including all requirements with respect to being duly registered and licensed.

4.1.5 Contractor must ensure that all employees performing any Work for which Contractor is responsible have a legal right to live and work in the United States. In addition, all compensation of any such employee must meet all applicable requirements of the Fair Labor Standards Act (FLSA) and Federal Minimum Wage laws.

4.1.6 Contractor must comply with the Immigration Reform and Control Act of 1986 (IRCA). Contractor understands and acknowledges the applicability of the IRCA activities. Contractor agrees to comply with the IRCA while performing their work and to permit City inspection of Contractor personnel records to verify such compliance.

4.1.7 Pursuant to MAG Specifications §§ 107.4, Contractor must report immediately any discovery of archeological ruins or artifacts. Excavation must stop immediately so that City can decide on the pertinent steps to follow such discovery.

Docusign Envelope ID: 8BAB3782-3942-4079-A0AA-BE0EB9A8D601

4.1.8 All property owners that may be affected by the proposed construction activities must be notified of the scope, duration of the construction activities and possible interference with their day-to-day activities by Contractor prior to start of construction. In addition, individual residential or commercial interferences, such as driveway restrictions, water outages, and all other Work adjacent to residence/business, require 48-hour notification in advance of specific adjoining Work. Notification may be through door hangers or other procedures approved by the City.

4.1.9 Access must be maintained to adjacent properties at all times during construction. Where property has more than one point of access, no more than one access will be restricted or closed at any one time. Access to adjacent private driveways will be maintained during all non-working hours.

4.1.10 Contractor must furnish and erect construction signs in accordance with Project Specifications. The signs must be professionally prepared and subject to approval by City, must be maintained by Contractor for the duration of the project, and must be removed by Contractor during the final project clean up.

4.1.11 The number of signs required, the size, shape, installation requirements and information to be included for construction signs is established on the detail sheet, provided, however, signs must be a minimum of 4 foot by 8 foot and must be installed so that the bottom of the sign is at least 4 foot above grade. No direct payment will be made for furnishing and erecting construction signs. The cost thereof must be included in other items for which direct payment is made. Sign locations will be determined by City.

4.1.12 All required construction signs must be installed by Contractor within 7 Days of Notice to Proceed.

4.1.13 The Work to be accomplished under these Agreement Documents has been designed for City by a Design Professional retained by City for this purpose. It is understood that normal construction Administration for the purpose of interpretation of the Agreement Documents is provided by City. Should any services of the Design Professional be required to assist in the corrections of errors or omissions by Contractor, or services of the Design Professional be required because of changes in structure or equipment where Contractor has requested approval of substitute methods or material, or any other items detailed herein below, those services will be provided by the Design Professional at the standard hourly rates previously negotiated with City and must be paid for by the Contractor.

4.1.14 Contractor must reimburse City for costs incurred by the Design Professional for additional services to the Project through no fault of City or the Design Professional including, but not limited to, the following conditions:

a. Additional Site visits, investigations, inspections, design work or reports by the Design Professional which are required due to damages to existing facilities or completed Work caused by the Contractor in his performance, Contractor's negligence, or Contractor's Work which is rejected as defective or as failing to conform to the Agreement Documents;

b. Design Professional construction phase services rendered on the project during the time the project remains incomplete after the Agreement date of final completion will be charged to Contractor at a rate previously negotiated City; and

Docusign Envelope ID: 8BAB3782-3942-4079-A0AA-BE0EB9A8D601

c. All retesting required due to the failure of Contractor's Work to meet the requirements of the Agreement Documents will be at Contractor's expense. All standby and travel time by the City's testing lab, the Design Professional or City due to Contractor's inability to be prepared for testing at the agreed upon time will be at the Contractor's expense.

4.1.15 City may withhold from any payment otherwise due to Contractor any amounts necessary to pay the Design Professional for such additional services as provided herein above.

4.1.16 Contractor will not be required to bear additional costs incurred by City due to errors by the Design Professional.

4.2 **CONTRACTOR'S PRE-AGREEMENT AND PRE-WORK DELIVERABLES**

4.2.1 Prior to award of the Agreement, Contractor must execute Agreement and deliver to City. Failure to do so may delay Agreement award. Contractor must also provide to City its Contractor's License classification and number and its Federal Tax I.D. number.

4.2.2 Before beginning any Work under the Agreement, Agreement must be fully executed by City.

4.2.3 After Agreement award, City will issue to Contractor an award letter. At that time Contractor must deliver to City such bonds and certificates of insurance with endorsements in such amounts (and other evidence of insurance requested by City) required under Section 11 of these General Conditions, and as the Agreement requires.

4.2.4 As evidence of Workmen's Compensation Insurance, Contractor must, upon request, provide a letter of certification from the Industrial Commission of Arizona that Contractor is insured by the State Compensation Fund or is an authorized self-insurer or a certificate of insurance issued by an insurance company authorized by the Insurance Department of Arizona to write Workmen's Compensation and Occupational Disease Insurance in the State of Arizona.

4.2.5 Within 10 Days of the date of the executed Agreement letter issued by City, Contractor must submit to City for review and acceptance the following items:

4.2.5.1 Comprehensive construction Project Schedule including a Critical Path Method (CPM) diagram schedule as described in Section 6.2. Project Schedule must be in Microsoft Project standard file format. Within 10 Days of receipt of City's comments, Contractor must make all required corrections, adjustments, and additions to complete the Project Schedule and resubmit to City for review.

4.2.5.2 Preliminary schedule of submittals and Shop Drawings. Within 10 Days of receipt of City's comments, Contractor must submit the corrected and completed schedule of Shop Drawings submissions for approval. Contractor's schedule of Shop Drawings and sample submittals will be acceptable to City if it provides a workable arrangement for reviewing and processing the required submittals.

4.2.5.3 Schedule of Values in a form specified by City reflecting the subcontracts and other categories that will be used to submit Pay Applications for the Work. The total amount of the Schedule of Values must not be greater than the Agreement Price. The Schedule of Values will be reviewed at the Pre-Construction Conference and revised by Contractor within 10 Days after Pre-Construction Conference in response to comments and questions from

Docusign Envelope ID: 8BAB3782-3942-4079-A0AA-BE0EB9A8D601

City. Once accepted by City in writing, the Schedule of Values for the Project must not be changed without the prior written approval of City.

4.2.6 Video Recording Requirement. Prior to performing any Work, Contractor must document the existing conditions of the Site, all other areas where Work will occur and all adjacent areas that may be impacted by the Work via digital video format. Contractor must video record and index all areas, features, buildings and other public and private improvements that could potentially be impacted by the Work. Video recording must be coordinated with City. When video recording private property, Contractor must also coordinate the video recording with the private property owner, if possible. Contractor must provide City with a copy of said digital video format prior to performing any Work.

4.2.7 Aerial Drone Construction Photography.

4.2.7.1 If Agreement duration is greater than 90 calendar days, Contractor must engage a professional unmanned aerial vehicle (UAV) aerial pilot to photograph the Site prior to construction mobilization, at three-month intervals during construction, and following final inspection. Drone camera specifications must meet the following minimum requirements:

a. 1-inch CMOS
b. Pixels: 20M
c. FOV 84 8.8 mm/24 mm (35 mm format equivalent) f/2.8-f/11 auto focus at 1 m-
d. For photographing: 16.9 Aspect Ratio: 5472x3078
e. For video shooting: MP4/MOV/H.264
f. FHD: 1920x1080 120p @100Mbps
g. File format: High Definition (HD) JPEG for digital photos and HD MPEG 4 for digital video.
h. All metadata to be recorded including GPS data and preserved with photographs provided.

Interval	**JPEG**
3 month intervals	At an altitude (AGL) between 70-90 ft.
3 month intervals	Images to be taken every 50-100 ft. to be determined based on project scope.

4.2.7.2 Drone photos to be taken in sequential geographical order and then organized and provided in the same manner unless otherwise specified.

4.2.7.3 Photos to be provided digitally via an online file share service and/or by a USB drive to contractor.

4.2.7.4 Drone pilots to obey ALL local (city, county, state) UAV regulations as well as FAA UAV guidelines including, but not limited to, conducting all flights during daylight hours, not exceeding maximum altitude ceilings (depending on area), not flying over people, yielding to other aircraft.

4.2.7.5 Drone pilots must fly drone within visual line of sight (VSOL) and have visual spotter when needed. Drone pilots only to operate in favorable weather conditions when minimum visibility is 3 miles or greater.

4.2.7.6 Drone pilots to conduct a preflight checklist and visually inspect the entire flight path prior to flying to ensure a safe flight.

Docusign Envelope ID: 8BAB3782-3942-4079-A0AA-BE0EB9A8D601

4.2.7.7 Airspace Authorizations. Operations in Class G airspace are allowed without air traffic control (ATC) permission. Operations in Class B, C, D and E airspace need ATC authorization. Drone pilots to schedule each flight in advance and based on airspace if required will notify nearby airports/control towers, etc.

4.2.8 Government Approvals and Permits.

4.2.8.1 Contractor must obtain all necessary permits for the Work and pay all applicable fees, unless otherwise noted on the Plans and in the Specifications. City permit fees will be paid internally by City. For bidding purposes, an allowance for all permit fees is included in the bid schedule under the item "allowance for permit fees." The Contractor will be paid for the actual cost of the permit fees upon submitting a receipt showing the fee Contractor has paid. Excluded from the above allowance are items such as all costs incurred by the Contractor in securing the permit except for the actual permit fee established by the agency, cost for all shutdowns or outages, cost for pole bracing, cost of permits for construction water, cost of construction water, cost for any additional insurance requirements, cost for any licenses, and other similar type costs. Contractor is specifically notified of the need to obtain the necessary environmental permits or file the necessary environmental and regulatory permit notices.

4.2.8.2 Copies of all permits and the associated notices must be provided to City prior to starting the permitted activity.

4.3 PRE-CONSTRUCTION CONFERENCE

4.3.1 Prior to the commencement of any Work, City will schedule a Pre-Construction Conference.

4.3.2 The purpose of this Conference is to establish a working relationship between Contractor, the utility firms, and various City agencies. The agenda will include critical elements of the Work schedule, submittal schedule, cost breakdown of major lump sum items, Payment Requests and processing, coordination with the involved utility firms, and emergency telephone numbers for all representatives involved in the course of construction.

4.3.3 Minimum attendance by Contractor at any mandatory meeting with City must be (1) Contractor's Representative, who is authorized to execute and sign documents on behalf of the firm, (2) Contractor's on-site Superintendent, and (3) Contractor's Safety Office, or other employee responsible for safety.

4.4 PERFORMANCE OF THE WORK (INCLUDING FIELD MEASUREMENTS, SUBCONTRACTORS, AND SUPPLIERS)

4.4.1 Unless otherwise provided in the Agreement Documents to be the responsibility of City or a separate Contractor, Contractor must provide through itself or Subcontractors the necessary supervision, labor, inspection, testing, start-up, material, equipment, machinery, temporary utilities and other temporary facilities to permit Contractor to complete the Work consistent with the Agreement Documents.

4.4.2 Contractor must perform all construction activities efficiently and with the requisite expertise, skill and competence to satisfy the requirements of the Agreement Documents. Contractor must at all times exercise complete and exclusive control over the means, methods, safety, sequences and techniques of construction.

4.4.3 Contractor's Superintendent must be present at the Site at all times that material Work

Docusign Envelope ID: 8BAB3782-3942-4079-A0AA-BE0EB9A8D601

under this Agreement is taking place. Contractor's Superintendent or designee must be present at the Site at all times any other Work under this Agreement is taking place. Superintendent must not be replaced without written notice to City. Whenever the Superintendent is not present at a particular part of the Work where the City or Design Professional may desire to inform the Contractor relative to interpretation of the Drawings and Specifications or to disapproval or rejection of materials or Work performed, the City or Design Professional may provide such information in writing to the foreman or other worker in charge of the particular part of the Work in reference to which the information is given. Information so given will be as binding as if given to the Superintendent.

4.4.4 All elements of the Work must be under the direct supervision of a foreman or his designated representative on the Site who must have the authority to take actions required to properly carry out that particular element of the Work.

4.4.5 Working Hours. Except in connection with the safety or protection of persons or the Work or property at the Site or adjacent thereto, and except as otherwise indicated, all Work at the Site must be performed during regular working hours, and Contractor will not permit overtime work or the performance of Work on Saturday, Sunday or any legal holiday without City's written consent given after prior written notice to City. If it will become absolutely necessary to perform Work at night or on Saturdays, Sundays or legal holidays, the City must be informed at least 24 hours in advance of the beginning of performance of such Work. Only such Work will be done at night as can be done satisfactorily as determined by the City. Good lighting and all other necessary facilities for carrying out and inspecting the Work must be provided and maintained at all points where such Work is being done. Further, unless such non-normal work hours are performed at City's request or required by the Agreement Documents, Contractor must pay to City all additional costs incurred by City by reason of such non-normal working hours. Expenses incurred by City for overtime compensation must be reimbursed by Contractor as follows: (i) City staff at the rate set forth in current City Fee Schedule as published on City website, (ii) Design Professional and staff at the standard hourly rates previously negotiated with City, and (iii) all others at actual cost plus ten percent administrative overhead. Such costs may be deducted by City from any payments due to Contractor. Provided, however, if overtime work or work during other than normal hours is at the request of City and not due to Contractor delay, City will pay the cost of City overtime expenses.

4.4.6 Where the Agreement Documents require that a particular product be installed or applied by an applicator approved by the manufacturer, it is Contractor's responsibility to ensure the Subcontractor employed for such work is approved by the manufacturer. All materials and equipment must be stored, applied, installed, connected, erected, used, cleaned and conditioned in accordance with the instructions of the applicable manufacturer, fabricator, supplier or distributor, except as otherwise provided in the Agreement Documents; but no provisions of any such instructions will be effective to impose on City of Design Professional responsibility for the means, methods, techniques, sequences or procedures of construction or for safety precautions incident thereto.

4.4.7 Before starting the Work, Contractor must carefully study and compare the various Plans, Drawings, other Agreement Documents, and Specifications relative to that portion of the Work, as well as the information furnished by City, must take field measurements of any existing conditions related to that portion of the Work and must observe any conditions at the Site affecting it. The exactness of grades, elevations, dimensions, or locations given on any Drawings, or the Work installed by other contractors, is not guaranteed by City.

Docusign Envelope ID: 8BAB3782-3942-4079-A0AA-BE0EB9A8D601

4.4.8 Before ordering materials or doing Work, Contractor and each Subcontractor must verify measurements at the Site and will be responsible for the correctness of such measurements. No extra charge or compensation will be allowed because of differences between actual dimensions and the dimensions indicated on the Agreement Documents, including the Drawings.

4.4.9 Ground Level Construction Photography.

4.4.9.1 The Contractor must furnish progress photographs of the project. The photographer selected by the Contractor must be approved by the City and must be either a commercial photographer or an individual experienced and equipped for such photography.

4.4.9.2 The Contractor must deliver to City all photographs taken during that period with each application for payment. If the current photographs do not accompany the application, the application will not be reviewed and will be returned to the Contractor as incomplete.

4.4.9.3 Photographs must be identified by use of typewritten labels affixed to the back of the photograph. The label must provide a description of the view, the direction from which the photograph was taken, the name of the project, City's project number, the name of Contractor and the date of the photography. The stationing must also be included for all pipeline installations.

4.4.9.4 Photographs must be taken during the construction period and must be of aesthetic composition and depict the progress of the Work from the beginning of construction through and including the finished product. City may vary the specified frequency so that significant progress or changes can be recorded on the photographs.

4.4.10 Underground Facilities.

4.4.10.1 The existence and number of facilities as shown on the Plans are estimated from information furnished by the particular utility. Contractor is responsible for field verification and location of all utilities prior to the start of construction. No field work will be allowed to start until Contractor has contacted Arizona 811 and all affected utilities have been located. In addition, Contractor must expose and physically locate all potentially conflicting utilities prior to construction. The actual locations of the utilities must be compared to locations shown on the Plans and any required changes in alignment and grade must be made at the time of construction in consultation with Project Manager. It is generally recognized and Contractor should anticipate that information from Arizona 811 or information from utility companies during project design, frequently fails to disclose all underground facilities. The fact that more utility lines or other underground facilities are located in the Project Site than shown on the Project Plans does not constitute an "unforeseen Condition" and such undisclosed underground facilities do not differ materially from the conditions which Contractor should expect. The provisions of Sections 105.4, 105.6, 107.11 and 109.8.1 of the MAG Uniform Standard Specifications for Public Works Construction apply and are incorporated herein by this reference.

4.4.10.2 Contractor is responsible for all coordination with utility companies. The provisions of Sections 105.4, 105.6, 107.11 and 109.8.1 of the MAG Uniform Standard Specifications for Public Works Construction strictly apply and no additional compensation will be paid to Contractor for delays due to utility work on the project.

4.4.11 Relocation of Existing Water Meters. When a service line has been extended and a line

Docusign Envelope ID: 8BAB3782-3942-4079-A0AA-BE0EB9A8D601

setter installed in a meter box, City forces will re-install meter. No compression fittings will be utilized.

4.4.12 Water Turn-On or Turn-Off.

4.4.12.1 Contractor must coordinate all water line turn-ons and turn-offs through the City. Application must be made to the Municipal Utility Division and Contractor must pay the established charges. The City will close existing valves, but will not guarantee a bone-dry Shutdown.

4.4.12.2 Contractor must notify all customers affected by the turn-off not less than 48 hours in advance. Notification must be in writing, must give the reason for the turn-off and must give the estimated time and duration that water service will be interrupted. Contractor is also notified that water turn-off will not be permitted on the Day before and after Thanksgiving Day and Christmas Day.

4.4.12.3 No direct payment will be made to Contractor for turn-ons or turn-offs. Costs associated therewith will be included in other items for which direct payment is made.

4.4.13 Tests and Inspections.

4.4.13.1 Contractor must give City timely (at a minimum, twenty-four hours) notice of readiness of the Work for all required inspections, tests or approvals. Contractor must give timely notice to City in advance of backfilling or otherwise covering any part of the Work so that city representative may, if desired, observe such part of the Work before it is concealed. Whenever Contractor varies the normal period during which Work or any portion of it is carried on each Day, Contractor must give timely notice to City so that city representative may, if desired, be present to observe the Work in progress. If Contractor fails to give such timely notice, any Work done in the absence of city representative will be subject to rejection. If Contractor gives such notice to City, but then is not ready for such inspections, tests, approvals or observations at the time so noticed, Contractor must reimburse City for all costs incurred by the attendance of city representatives.

4.4.13.2 If any law, ordinance, rule, regulation, code, or orders of any public body having jurisdiction requires any Work (or part thereof) to be inspected, tested or approved, Contractor (unless another party is specified in the Agreement Documents) must assume full responsibility therefor, pay all costs in connection therewith and furnish City the required certificates of inspection, testing, or approval. Contractor must also be responsible for and must pay all costs in connection with any inspection or testing required by the Specifications in connection with City's acceptance of a manufacturer, fabricator, supplier or distributor of materials or equipment proposed to be incorporated in the Work, or of materials or equipment submitted for approval prior to Contractor's purchase thereof for incorporation in the Work. The cost of all other inspections, tests and approvals required by the Agreement Documents will be paid by City (unless otherwise specified).

4.4.13.3 All inspections, tests or approvals other than those required by law, ordinance, rule, regulation, code or order of any public body having jurisdiction must be performed by organizations acceptable to City and by the Design Professional if so specified.

4.4.13.4 Neither observations by City, the Design Professional nor inspections, tests or approvals by others will relieve Contractor from their obligations to perform the Work in accordance with the Agreement Documents.

Docusign Envelope ID: 8BAB3782-3942-4079-A0AA-BE0EB9A8D601

4.4.14 Uncovering Work. If any Work that is to be observed, inspected, tested or approved is covered without written concurrence of City, it must, if requested by City be uncovered for observation. Unless Contractor has given City timely notice of Contractor's intention to cover such Work and City has not acted with reasonable promptness in response to such notice, Contractor must furnish all necessary labor, material and bear all the expenses of such uncovering, exposure, observation, inspection and testing and of satisfactory reconstruction, including compensation for additional professional services, and an appropriate deductive Change Order will be issued.

4.4.15 In all cases of interconnection of its Work with existing or other Work, Contractor must verify at the Site all dimensions relating to such existing or other Work. Any errors due to Contractor's failure to so verify all such grades, elevations, locations or dimensions must be promptly rectified by Contractor without any increase in the Agreement Price. Any design errors or omissions noted by Contractor during this review must be reported promptly to City.

4.4.16 Contractor must establish and maintain all construction grades, lines, levels, and benchmarks, and will be responsible for accuracy and protection of same. This Work must be performed or supervised by a licensed civil engineer or surveyor in the State of Arizona.

4.4.17 Contractor must photograph all buried piping of greater than four (4) inches in diameter prior to backfill.

4.4.18 Contractor is responsible for the proper performance of the work of Subcontractors and any acts and omissions in connection with such performance. Nothing in the Agreement Documents is intended or deemed to create any legal or contractual relationship between City and any Subcontractor or Sub-Subcontractor, including but not limited to any third-party beneficiary rights.

4.4.19 Contractor must coordinate the activities of all Subcontractors. Contractor must coordinate performance of the Work with City's Public Works & Utilities Department and other departments or agencies within City. The Design Professional and other contractors or parties involved in the Project. If City performs other work on the Project or at the Site with separate contractors under City's control, Contractor agrees to cooperate and coordinate its activities with those of such separate contractors so that the Project can be completed in an orderly and coordinated manner without unreasonable disruption.

4.4.20 Contractor will not substitute or change any Subcontractor or Supplier without the prior written approval of City. Any substitute or replacement Subcontractor or Supplier must be required to meet the same qualifications and selection criteria and process as the original Subcontractor or Supplier. If a Subcontract/Supplier selection plan has been approved by City, Contractor will follow that plan unless otherwise approved by City in writing.

4.4.21 Contractor must not change or replace any members of its Project team, including Contractor's Representative, Project Manager, or Superintendent, without an explanation for the change being given to City, and receiving prior written approval of the change from City, which approval will not be unreasonably withheld.

4.4.22 Subcontractors whose scope of work has a value greater than 15% of the total Agreement Price are required to furnish performance and payment bonds to Contractor, unless

Docusign Envelope ID: 8BAB3782-3942-4079-A0AA-BE0EB9A8D601

otherwise approved in writing by City.

4.4.23 Contractor must comply with MAG Specification § 108.2 (E) unless otherwise specified in Agreement Documents.

4.5 **CONTROL OF THE PROJECT SITE**

4.5.1 Throughout all phases of construction, including suspension of Work, Contractor must keep the Site reasonably free from debris, trash and construction wastes to permit Contractor to perform its construction services efficiently, safely and without interfering with the use of adjacent land areas. Prior to Final Acceptance of the Work, or a portion of the Work, Contractor must remove all debris, trash, construction wastes, materials, equipment, machinery and tools arising from the Work or applicable portions thereof to permit City to occupy the Project or a portion of the Project for its intended use.

4.5.2 Contractor must take whatever steps, procedures or means necessary to prevent dust nuisance due to construction operations. The dust control measures must be maintained at all times to the satisfaction of City and in accordance with the requirements of the Maricopa County Bureau of Air Pollution Control Rules and Regulations.

4.5.3 Contractor must maintain Americans with Disabilities Act (ADA) and American National Standards Institute (ANSI) accessibility requirements during construction activities, including without limitation compliance with the 2010 regulations governing implementation of the ADA to the extent applicable. ADA and ANSI accessibility requirements must include, but not be limited to, parking, building access, areas of refuge, and emergency exit paths of travel. Contractor is responsible for the coordination of all Work to minimize disruption to residents and the public.

4.5.4 Only materials and equipment used directly in the Work will be brought to and stored on the Site by Contractor. When equipment is no longer required for Work, it must be removed promptly from the Site. Protection of construction materials and equipment stored at the Site from weather, theft, damage and all other adversity is solely the responsibility of the Contractor.

4.5.5 Contractor agrees all persons working on the Site must act at all times in the best interest of the Project and will comply with all applicable rules and regulations reasonably set forth by City related to the Site. Notwithstanding the foregoing or anything in this Agreement to the contrary, City may remove from the Site any individual who City deems in their reasonable discretion to be creating a disturbance or causing any problem on the Site.

4.5.6 Contractor will be responsible to City for the acts and omissions of Contractor's employees, Subcontractors and their agents and employees, and any other person performing any of the Work under an Agreement with Contractor, or claiming by, through or under Contractor, for all damages, losses, costs and expenses resulting from such acts or omissions.

4.5.7 City may conduct criminal, drive history, and all other requested background checks of Contractor and Subcontractor personnel performing Work or who have access to City's information, data, or facilities in accordance with City's current background check policies, or the provisions of the Project Specific Conditions. Any officer, employee or agent that fails to background check must be replaced immediately.

4.5.8 City will have a final authority, based upon security reasons: (i) to determine when

Docusign Envelope ID: 8BAB3782-3942-4079-A0AA-BE0EB9A8D601

security clearance of Contractor's and Subcontractor's personnel is required; (ii) to determine the nature of the security clearance, up to and including fingerprinting personnel; and (iii) to determine whether or not any individual or entity may provide Services or perform Work under the Agreement.

4.5.9 If City objects to any personnel for any reasonable cause, then Contractor must, upon notice from City, remove such individual from the Project.

4.6 **PROJECT SAFETY**

4.6.1 The Project and all Work performed in relation thereto is governed by applicable provisions of the federal laws, including but not limited to, the latest amendments of the following:

a. Williams-Steiger Occupational Safety & Health Act of 1970, Public Law, 91-596.

b. Part 1910 and Part 1926 – Occupational Safety and Health Standards, Chapter XVII of Title 29, Code of Federal Regulations.

c. Part 1518 – Safety and Health Regulations for Construction, Chapter XIII of Title 29, Code of Federal Regulations.

4.6.2 Contractor is responsible for safety of the job Site for employees of Contractor as well as for members of the general public and others who may drive or walk through or be at the Site.

4.6.3 Contractor recognizes the importance of performing the Work in a safe manner so as to prevent damage, injury or loss to: (i) all individuals at the Site, whether working or visiting; (ii) the Work, including materials and equipment incorporated into the Work and stored On-Site or Off-Site; and (iii) all other property at the Site or adjacent thereto, including trees, shrubs, lawns, walks, pavements, roadways, structures and utilities not designated for removal, relocation or replacement in the course of construction; and (iv) the owners or tenants of adjacent property and their patrons, employees and invitees.

4.6.4 Contractor assumes responsibility for implementing and monitoring all safety precautions and programs related to the performance of the Work.

4.6.5 Contractor must provide a "competent person' as required by O.S.H.A regulations. The "competent person" must be identified at the Pre-Construction Conference with City advised in writing of any changes.

4.6.6 The "competent person" must make routine daily inspections of the Site and must hold weekly safety meetings with Contractor's personnel, Subcontractors and others as applicable.

4.6.7 Contractor and Subcontractors must comply with all legal and regulatory requirements relating to safety, as well as any City specific safety requirements set forth in the Agreement Documents, provided that such City-specific requirements do not violate any applicable legal and regulatory requirements.

4.6.8 Contractor will immediately report in writing any safety-related injury, loss, damage or accident arising from the Work to Project Manager and, to the extent mandated by Legal Requirements, to all government or quasi-government authorities having jurisdiction over safety-related matters involving the Project or the Work.

Docusign Envelope ID: 8BAB3782-3942-4079-A0AA-BE0EB9A8D601

4.6.9 Contractor's responsibility for safety under this Section is not intended in any way to relieve Subcontractors and Sub-Subcontractors of their own contractual and legal obligations and responsibility for (i) complying with all Legal Requirements, including those related to health and safety matters, and (ii) taking all necessary measures to implement and monitor all safety precautions and programs to guard against injury, losses, damages or accidents resulting from their performance of the Work.

4.6.10 As between City and Contractor, Contractor is responsible to City for any and all the safety issues relating to the Work on the Project. Contractor must administer and manage the safety program. This will include, but not necessarily be limited to review of the safety programs of each Subcontractor. Contractor must monitor the establishment and execution of compliance with all applicable regulatory and advisory agency construction safety standards. Contractor's responsibility for review, monitoring, and coordination of the Subcontractor's safety programs will not extend to direct control over execution of the Subcontractors' safety programs. Notwithstanding Contractor's safety obligations to City, it is agreed and understood that each individual Subcontractor will remain controlling employer responsible for the safety programs and precautions applicable to its own work and the activities of other's work in areas designated to be controlled by such Subcontractor for purposes of workers compensation insurance coverage.

4.6.11 Nothing in this agreement will relieve Contractor of his responsibility to maintain traffic, structures, etc., as noted on the Plans, Specifications, and Project Specific Conditions. Contractor is responsible to provide all necessary shoring, bracing and trench support as is necessary to maintain traffic structures, etc., as stipulated in the Plans, Specifications, and Special Provisions. If the stability of adjoining building, walls, roadways, etc., is endangered by Contractor's excavation, shoring, bracing, or under pinning must be provided as necessary to ensure project safety. Cost for shoring, bracing, underpinnings, and trench support will be included in the appropriate items listed in the Agreement Price, and no additional payment will be made for this work.

4.7 MATERIALS QUALITY, SUBSTITUTIONS, AND SHOP DRAWINGS

4.7.1 Quality Control and Quality Assurance Testing.

4.7.1.1 All construction materials to be used or incorporated in the Project are subject to inspection, Quality Control & Quality Assurance Testing, and approval or rejection by City. Any material rejected by City must be removed immediately and replaced in an acceptable manner to City at no additional cost to City. When QC/QA tests indicate noncompliance with the Agreement Documents, retesting must be performed by the same testing laboratory that performed the tests that indicated noncompliance.

4.7.1.2 The Contractor must establish, provide, and maintain an effective Quality Control Testing Program (QCTP). The Contractor must develop his own program or procure the services of a consultant. In either case, the party performing the tests must be currently certified by the National Bureau of Standards in the National Voluntary Laboratory Accreditation Program (NVLAP) for construction services or the AASHTO Accreditation Plan (AAP) for Soils, Asphalt and Concrete. The Contractor must provide all support necessary to perform QC and QA testing and sampling (i.e. shoring for testing trench backfill, backhoes, motor graders, loaders, etc. to facilitate testing and sampling). The City will perform the QA testing.

4.7.1.3 The Contractor must submit a written QCTP to the City as a required submittal. The Contractor must not begin Work until the Quality Control Program has been reviewed and

Docusign Envelope ID: 8BAB3782-3942-4079-A0AA-BE0EB9A8D601

accepted by the City. Resumes of all personnel that will be associated directly or indirectly with the QCTP must be included.

4.7.1.4 The QCTP must include, but not be limited to, on-site/field and laboratory testing of all material delivered to the Site and any existing materials or conditions pertinent to the project.

4.7.1.5 All testing must be under the direction of a Professional Engineer registered in the State of Arizona, knowledgeable in Materials Testing. All "Test Report" forms must be stamped by said Engineer.

4.7.1.6 The written QCTP will set forth the responsibilities of the engineer, project manager, supervisory personnel and each technician assigned to this project. Substitutions or replacement of personnel must require prior written approval by the City. All personnel must be proficient within their assigned duties and possess certification(s) commensurate with their position and responsibilities. The minimum certification(s) for each technician must be NICET Level II, Arizona Technical Testing Institute, American Concrete Institute, or other nationally recognized program applicable to the project and approved by the City of Chandler. The written QCTP must include a description of the required field and construction materials laboratory tests, including required frequencies that meet the minimums established herein.

4.7.1.7 The Contractor must establish a system to record and report all material test results. The daily test reports must include, but not be limited to:

a. Test designation;
b. Date of test;
c. Name of tester;
d. Location of test/sample (station and offset);
e. Product suppliers and product codes (as applicable);
f. Depth/elevation of test/sample;
g. Test result;
h. Control requirement(s);
i. Cause of rejection (if applicable);
j. Results of retests (if applicable); and
k. Remedial action (if applicable).

4.7.1.8 The Contractor must submit test results to the designated City representative.

4.7.1.9 The Contractor must also submit a weekly report to the City summarizing the testing and construction activities completed by emailing the report to the email addresses noted above. All weekly reports must be submitted simultaneously to the Contractor and the City of Chandler. The report must include individual summary sheets for each utility line, structure, and portion of the pavement section. Cores must be numbered sequentially throughout the Project. Re-cores must reference the original core by number and must contain the averaged values for thickness and density. Total pavement thickness must be reported. Vertical location of tests for underground utilities must indicate the depth of the

Docusign Envelope ID: 8BAB3782-3942-4079-A0AA-BE0EB9A8D601

excavation at the location of the test (i.e., cut to flow line [if applicable], depth to bottom or top of pipe, etc.). Density tests must be numbered sequentially. If the minimum number of tests has not been performed per the written QCTP, this must be stated in the weekly summary report with an explanation of the circumstances.

4.7.1.10 The City will maintain a copy of the Project test results and weekly reports in the Project file. In cases where quality control activities do not comply with the Agreement provisions, the City may:

a. Order the Contractor to replace ineffective or unqualified quality control personnel.

b. Order the Contractor to stop operations until appropriate corrective action is taken.

4.7.1.11 Although minimum testing requirements are specified herein, the Contractor bears full responsibility for the quality of the materials and their installation and may elect to perform additional testing beyond the requirements set forth herein to ensure compliance.

4.7.1.12 The Quality Control requirements contained in this Section are in addition to and separate from Quality Assurance Testing, which will be performed by the City of Chandler or its representative. If the Quality Assurance test results are not in agreement with the Quality Control test results, the Contractor will have the option to retain a third party consultant for referee tests. The third party consultant must meet the same requirements as the consultant performing the Quality Control Testing. The results of the third party will be binding. All cost incurred by the referee testing will be the Contractor's expense. If the Contractor elects not to retain a third party for referee testing, the City of Chandler test results will prevail.

4.7.1.13 Except as otherwise noted within this Section, Work or materials required by this Section are non- pay items. Per MAG Section 101, a non-pay item is an item of Work for which no separate payment will be made, the cost of which is to be included as an incidental cost for associated item(s) included on the Bid Schedule or Schedule of Values.

4.7.2 <u>Trade Names and Substitutions</u>.

4.7.2.1 Substitutions prior to bid will only be considered if in compliance with Arizona Revised Statute § 34-104.

4.7.2.2 Contractor, if requested by City, must submit Samples or any additional information that may be necessary to evaluate the acceptability of the substitution.

4.7.2.3 City will make the final decision and will notify Contractor in writing as to whether the substitution has been accepted or rejected.

4.7.2.4 If City does not respond within 15 working days, Contractor must continue to perform the Work in accordance with the Agreement Documents and the substitution will be considered rejected.

4.7.3 <u>Shop Drawings</u>.

4.7.3.1 Contractor must prepare and submit Shop Drawings which show details of all Work to insure proper installation of the Work using those materials and equipment specified under the approved Plans and Specifications.

Docusign Envelope ID: 8BAB3782-3942-4079-A0AA-BE0EB9A8D601

4.7.3.2 Contractor must submit a schedule of Shop Drawing submissions, which avoids bulk submissions to the extent reasonably possible, with the Project Schedule for City approval. The schedule of Shop Drawing submissions must include all of the items for which Shop Drawings are required by the Agreement Documents, including the Specifications. Unless otherwise noted, Shop Drawings will not be required for items specified or detailed in the Uniform Standard Specifications and Details or the Technical Specifications.

4.7.3.3 Shop Drawings must be numbered consecutively for each Specification section and must accurately and distinctly present the following:

a. All working and erection dimensions.

b. Arrangements and sectional views.

c. Necessary details, including complete information for making connections between work under this Agreement and work under other Agreements.

d. Kinds of materials and finishes.

e. Parts list and description thereof.

4.7.3.4 Each Drawing or page must include:

a. Project Name, City of Chandler Project Number and descriptions.

b. Submittal date and space for revision dates.

c. Identification of equipment, product or material.

d. Name of Contractor and Subcontractor.

e. Name of Supplier and Manufacturer.

f. Relation to adjacent structure of material.

g. Physical dimensions clearly identified.

h. ASTM and Federal Specifications references.

i. Identification of and justification for deviations from the Agreement Documents.

j. Contractor's stamp, initialed or signed, dated and certifying the review of submittal, certification of field measurements and compliance with Agreement.

k. Location at which the equipment or materials are to be installed.

4.7.3.5 Location will mean both physical location and location relative to other connected or attached material. City will return unchecked any submittal, which does not contain complete data on the Work and full information on related matters.

4.7.3.6 Stock or standard drawings will not be accepted for review unless full identification and supplementary information is shown thereon in ink or typewritten form.

4.7.3.7 Contractor must schedule, prepare and submit all Shop Drawings in accordance with a time-table that will allow its suppliers and manufacturers sufficient time to fabricate, manufacture, inspect, test and deliver their respective products to the project Site in a timely manner so as to not delay the complete performance of the Work.

Docusign Envelope ID: 8BAB3782-3942-4079-A0AA-BE0EB9A8D601

4.7.3.8 If the Shop Drawings show departures from the Agreement requirements, Contractor must make specific mention thereof in the Letter of Transmittal; otherwise review of such submittals by City will not constitute review of the departure. Review of the Drawings will constitute review of the specific subject matter for which the Drawings were submitted and not of any other structure, material, equipment, or apparatus shown on the Drawings.

4.7.3.9 The review of Shop Drawings will be general and will not relieve Contractor of responsibility for the accuracy of such Drawings, nor for the proper fitting and construction of the Work, nor for the furnishing of materials or Work required by the Agreement. No construction called for by Shop Drawings will be initiated until such Drawings have been reviewed and approved by City.

4.7.3.10 The procedure in seeking review of the Shop Drawings will be as follows:

a. Contractor must submit complete sets of Shop Drawings and other descriptive data as specified in this Section.

b. After Contractor's submittal or resubmittal of Shop Drawings, if Contractor has submitted Shop Drawings in accordance with the City-approved submittal schedule, or upon resubmission, City will be provided with three (3) calendar weeks for review. Should City require additional review time above and beyond the three (3) calendar weeks, Contractor may ask for a time extension or monetary compensation, if they can present valid, factual evidence that actual damages were incurred by Contractor. City will determine the amount of the time extension or the monetary compensation to be awarded Contractor, if any, in accordance with City's Policy Statement for Calculating Delays and Damages, Appendix 1.

4.7.3.11 Contractor will be responsible for all extra costs incurred by City caused by Contractor's failure to comply with the procedure outline above.

4.7.4 Long Lead Time Items. Contractor must submit Shop Drawings, as required by the Engineer, on all long lead items to be furnished and installed as part of the project within 10 Days after the date of the executed Agreement letter issued by City. In addition, Contractor must order all long lead items to be furnished and installed as part of this Project within 3 Days after receiving approved Shop Drawings. For all long lead times for which Shop Drawings are not required, Contractor must order said long lead items within 15 Days after the date of the executed Agreement letter issued by City. Within 2 Days after ordering long lead items, Contractor must supply copies of all purchase orders, along with an accurate delivery schedule from the supplier.

4.7.5 Construction Water. If Contractor uses water from City's water system for construction water, Contractor must obtain a fire hydrant meter from City of Chandler Utility Services (480-782-2280) and all construction water must be obtained through the hydrant meter. Contractor must pay all fees related to the hydrant meter and all water bills for construction water. All cost for meters and construction water will be included in the Agreement Price.

4.8 PROJECT RECORD DOCUMENTS

4.8.1 During the construction period, Contractor must maintain at the jobsite a full-size set of prints of the Construction Document Drawings and Shop Drawings for Project Record Document purposes.

Docusign Envelope ID: 8BAB3782-3942-4079-A0AA-BE0EB9A8D601

4.8.2 Contractor must mark these Drawings to indicate the actual installation where the installation varies from the original Construction Documents. Contractor must give particular attention to information on elements that will be concealed, which would be difficult to identify or measure and record later. Items required to be marked include but are not limited to:

a. Dimensional changes to the Drawings.

b. Revisions to details shown on Drawings.

c. Locations and depths of underground utilities.

d. Revisions to routing of piping and conduits.

e. Actual equipment locations.

f. Changes made by Change Order or Addendum.

g. Details not on original Agreement Drawings.

4.8.3 Contractor must mark completely and accurately Project Record Drawing sets of Construction Documents.

4.8.4 Contractor must mark Project Record Drawings sets with red erasable colored pencil.

4.8.5 Contractor must note Request for Information (RFI) Numbers and Change Order numbers, etc., as required to identify the source of the change to the Construction Documents.

4.8.6 Contractor must submit Project Record Drawing sets and Shop Drawings to City or its representative for review and comment.

4.8.7 Upon receipt of the reviewed Project Record Drawings from City, Contractor must correct any deficiencies and omissions to the Drawings and submit the final original of the Project Record Drawings to City prior to Final Payment.

4.8.8 Project Manager will review the Project Record Drawings monthly prior to the date established for the Payment Request and will be the sole judge of acceptance of these Drawings.

4.9 WARRANTY AND CORRECTION OF DEFECTIVE WORK

4.9.1 Contractor warrants to City that the construction, including all materials and equipment furnished as part of the Work, will be new unless otherwise specified in the Agreement Documents, of good quality, and free of defects in materials and workmanship. Contractor's warranty obligation excludes defects caused by abuse, alterations, or unreasonable failure to maintain the construction by persons other than Contractor, subcontractors, or others under Contractor's control. Nothing in this warranty will limit any manufacturer's warranty which provides City with greater warranty rights than set forth herein or in the Agreement. Contractor will provide City with all manufacturers' warranties and operation and maintenance manuals upon substantial completion of the Work. Contractor's warranty must be for one (1) year, in accordance with MAG Specification § 108.8, and will commence for all portions of the Work upon Final Acceptance of the entire Work as determined by City under the Agreement. All statutory or other warranties, express or implied, related to latent defects will remain in force and are not limited by this provision.

4.9.2 City May Stop the Work. If the Work is defective, or Contractor fails to supply sufficient skilled workmen or suitable materials or equipment, City may order Contractor to stop the

Docusign Envelope ID: 8BAB3782-3942-4079-A0AA-BE0EB9A8D601

Work without cost to City, or any portion thereof, until the cause for such order has been eliminated; however, this right of City to stop the Work will not give rise to any duty on the part of City to exercise this right for the benefit of Contractor or any other party.

4.9.3 Correction or Removal of Defective Work.

4.9.3.1 If required by City, Contractor must promptly, without cost to City and as specified by City, either correct any defective Work, whether or not fabricated, installed or completed, or, if the Work has been rejected by City, remove it from the Site and replace it with non-defective Work. Contractor must correct any Work which may be displaced in correcting, removing or replacing defective Work. No compensation will be allowed Contractor for such removal, replacement or remedial Work. Contractor must reimburse City for costs incurred by City due to such correction or removal including but not limited to additional expenses for inspection, testing or observation and for repeated reviews by the City or Design Professional.

4.9.3.2 Upon failure on the part of the Contractor to comply within a reasonably prompt time with any written order of City to correct or remove defective Work, City has authority to cause nonconforming materials or rejected Work to be remedied, removed, or replaced at the Contractor's expense and to deduct the costs from any moneys due or to become due the Contractor.

4.9.4 City May Correct Defective Work. If Contractor fails within a reasonable time after written notice of City to proceed to correct defective Work or to remove and replace rejected Work as required by City or if Contractor fails to perform the Work in accordance with the Agreement Documents (including any requirements of the progress schedule), City may, after 7 Days' written notice to Contractor, correct and remedy any such deficiency. To the extent necessary to complete corrective and remedial action, City may exclude Contractor from all or part of the Work, and suspend Contractor's services related thereto, take possession of Contractor's tools, appliances, construction equipment and machinery at the Site and incorporate in the Work all materials and equipment stored at the Site or for which City has paid Contractor, but which are stored elsewhere. Contractor must allow City, city representatives, agents and employees such access to the Site as may be necessary to enable City to exercise City’s rights under this Section. All direct and indirect costs of City in exercising such rights will be charged against Contractor in an amount verified by City representative, and a Change Order will be issued incorporating the necessary revisions in the Agreement Documents and a reduction in the Agreement Price. Such direct and indirect costs will include, in particular but without limitation, compensation for additional professional services required and all costs of repair and replacement of Work or others destroyed or damaged by correction, removal or replacement of Contractor's defective Work. Contractor will not be allowed an extension of the Agreement Time because of any delay in Contractor’s performance of the Work attributable to the exercise by City or City's rights hereunder.

4.9.5 Correction or Removal of Unauthorized Work.

4.9.5.1 Any Work done beyond the lines and grades shown on the Drawings or established by the Design Professional or any changes in, additions to, or deductions from the Work done without written authority will be considered as unauthorized and will not be paid for. Work so done may be ordered remedied, removed, or replaced at the Contractor's expense.

4.9.5.2 Upon failure on the part of the Contractor to comply promptly with any order of the City,

Docusign Envelope ID: 8BAB3782-3942-4079-A0AA-BE0EB9A8D601

City will have authority to cause unauthorized Work to be remedied, removed, or replaced at the Contractor's expense and to deduct the costs from any moneys due or to become due the Contractor.

4.9.6 Correction Period - One Year Guarantee.

4.9.6.1 If, within one year after the date of Final Acceptance, or such longer period of time as may be prescribed by law or by the terms of any applicable special guarantee required by the Agreement Documents, or by any specific provision of the Agreement Documents, any Work is found to be defective, Contractor must promptly, without cost to City and in accordance with City's written instructions, either correct such defective Work, or, if it has been rejected by City, remove it from the Site and replace it with non-defective Work. If Contractor does not promptly comply with the terms of such instructions, or in an emergency where delay would cause serious risk of loss or damage, City may have the defective Work corrected or the rejected Work removed and replaced, and all direct and indirect costs of such removal and replacement, including compensation for additional professional services, must be paid by Contractor. Such action by the City will not relieve the Contractor of the guarantees required by this Section or elsewhere in the Agreement Documents.

4.9.6.2 If, in the opinion of the City, defective Work creates a dangerous condition or requires immediate correction or attention to prevent further loss to the City or to prevent interruption of operation of the City, the City will attempt to give the notice required by this Section. If the Contractor cannot be contacted or does not comply with the City's request for correction within a reasonable time as determined by the City, the City may, notwithstanding the provisions of this Section, proceed to make such correction or provide such attention; and the costs of such correction or attention will be charged against the Contractor. Such action by the City will not relieve the Contractor of the guarantees required by this Section or elsewhere in the Agreement Documents.

4.9.6.3 This Section does not in any way limit the guarantee on any items for which a longer guarantee is specified or on any items for which a manufacturer or supplier gives a guarantee for a longer period. The Contractor agrees to act as co-guarantor with such manufacturer or supplier and must furnish the City all appropriate guarantee or warranty certificates upon completion of the Project. No guarantee period, whether provided for in this Section or elsewhere, will in any way limit the liability of Contractor or their sureties or insurers under the indemnity or insurance provisions of these General Conditions and the Project Specific Special Conditions.

4.9.7 Acceptance of Defective Work.

4.9.7.1 If, instead of requiring correction or removal and replacement of defective Work, City may accept Work when in the best interest of the City to do so with appropriate monetary credit from Contractor. If any such acceptance occurs prior to final payment, a Change Order will be issued incorporating the necessary revisions in the Agreement Documents, including appropriate reduction in the Agreement Price; or, if the acceptance occurs after final payment, an appropriate amount must be paid by Contractor to City.

4.9.7.2 Alternatively, City may require Contractor to furnish at Contractor's expense, a special performance guarantee or other surety prior to acceptance of defective work.

4.9.8 The Warranty period begins on the Final Acceptance date noted in the Certificate of Completion, irrespective of early completion by some Subcontractors of their work.

Docusign Envelope ID: 8BAB3782-3942-4079-A0AA-BE0EB9A8D601

4.9.9 Contractor's warranty obligation must be in accordance with MAG Specifications.

4.9.10 Nothing in the warranties contained in the Agreement Documents are intended to limit any manufacturer's warranty which provides City with greater warranty rights than set forth in this Section or the Agreement Documents. Contractor must provide City with all manufacturers' warranties prior to Substantial Completion, if applicable, or Final Acceptance.

4.9.11 Contractor agrees that it will be responsible to manage and administer the correction of any Work that is not in conformance with the Agreement Documents during the warranty periods set forth in this Section, or during any longer periods to the extent required by the Agreement Documents. A progress payment, or partial or entire use or occupancy of the Project by City, will not constitute acceptance of Work not in accordance with the Agreement Documents.

4.9.12 When notified of a warranty issue, Contractor must respond in writing within 48-hours and must perform warranty Work as soon as material for said repairs are available (as judged solely by City), and in any event Contractor must, take immediate steps to commence and complete correction of nonconforming Work no later than the time period set forth in City's written notification in accordance with the Agreement Documents. This includes the correction, removal or replacement of the nonconforming Work and any damage caused to other parts of the Work affected by the nonconforming Work. If defects develop which are determined by City to be an emergency, City will notify Contractor, via the most expeditious means regarding the nature and condition of the defects. In turn, Contractor must immediately dispatch necessary forces to correct the defect or the emergency condition in accordance with Agreement Documents.

4.9.13 The time periods referenced in this Section apply only to Contractor's obligation to correct nonconforming Work and is not intended to constitute a period of limitations for any other rights or remedies that City may have regarding Contractor's other obligations under the Agreement Documents.

4.9.14 Without limiting the foregoing or anything in these General Conditions or the Agreement to the contrary, Contractor must obtain and provide to City all warranties for any portion of the Project offered by the manufacturer, installer or provider thereof. City and the user of the facility will have the right to the full value and benefit of all such warranties. Contractor must ensure all such warranties are fully transferrable to facilitate the full value of this Section.

4.9.15 Contractor's warranty excludes damages or defects caused by abuse, alterations to the Work not executed by or through Contractor, improper or insufficient maintenance, improper operation, or normal wear and tear and normal usage.

4.9.16 In the event of any noncompliance with this entire Section 4, City may require Contractor to stop or suspend the Work in whole or in part.

SECTION 5 - CITY RESPONSIBILITIES

5.1 CITY PROJECT MANAGER AND INSPECTORS

5.1.1 Project Manager is responsible for providing City-supplied information and approvals in a timely manner to assist Contractor to fulfill its obligations under the Agreement Documents.

Docusign Envelope ID: 8BAB3782-3942-4079-A0AA-BE0EB9A8D601

5.1.2 Project Manager will also provide Contractor with prompt notice when it observes any failure on the part of Contractor to fulfill its contractual obligations, including any default or defect in the Project or non-conformance with the Drawings and Specifications.

5.1.3 City may utilize Field Inspectors to assist Project Manager during construction in observing performance of Contractor. City's use of Inspectors is for the purpose of assisting Project Manager.

5.1.4 The Inspectors are authorized to inspect all Work and materials furnished. Such inspections may extend to all or part of the Work and to preparation, fabrication or manufacture of the materials to be used. The Inspectors have the authority to issue instructions contrary to the Construction Documents if approved and coordinated with the directions of Project Manager.

5.1.5 The Inspectors have the authority to reject work or materials until any questions at issue can be decided by Project Manager.

5.1.6 The use of Inspectors by City will not make City responsible for or give City control over construction means, methods, techniques, sequences or procedures or for safety precautions or programs or responsibility for Contractor's failure to perform the Work in accordance with Agreement Documents. The Inspectors are not authorized to direct any of Contractor's activities, employees or Subcontractors.

5.2 **DESIGN PROFESSIONAL SERVICES**

City may contract separately with one or more Design Professionals to provide construction administration of the Project. The Design Professional's Agreement, as well as other firms hired by City may be furnished to Contractor. Contractor does not have the right to limit or restrict or reject any Agreement modifications that are mutually acceptable to City and Design Professional.

5.3 **CITY'S SEPARATE CONTRACTORS**

City is responsible for all work performed on the Project or at the Site by separate contractors retained by City. City will contractually require its separate contractors to reasonably cooperate with, and reasonably coordinate their activities so as not to interfere with Contractor in order to enable Contractor to timely complete the Work consistent with the Agreement Documents. Contractor must immediately notify the Project manager, and address the matter in the next monthly status report, if any activities of such separate contractors are expected to interfere, or are interfering, with Contractor and such interference will or could result in any delay in Contractor's performance of the Work.

5.4 **PERMIT REVIEW AND INSPECTIONS**

5.4.1 If requested by Contractor, Project Manager will provide assistance and guidance in obtaining necessary reviews, permits and inspections.

5.4.2 The regulating agencies of City, such as Development and Sustainability, Fire and Planning Departments, enforce legal requirements. The enforcement activities of City are independent and separate from this Agreement.

5.5 **PLANS AND SPECIFICATIONS TO THE CONTRACTOR**.

Contractor will be provided up to five copies of the Agreement Documents as are reasonably necessary for the execution of the Work. Additional copies will be furnished,

Docusign Envelope ID: 8BAB3782-3942-4079-A0AA-BE0EB9A8D601

upon request, at the cost of reproduction.

SECTION 6 - AGREEMENT TIME

6.1 AGREEMENT TIME

6.1.1 The Agreement Time will start with the Notice to Proceed ("NTP") and end with Final Acceptance.

6.1.2 Beginning on the date of the NTP, Contractor must begin to fulfill Contractor's obligations under the Agreement. Contractor's obligations include providing City and other agencies with any submittals required by the Project Specific Special Provisions, including but not limited to, an approved Project Schedule, Traffic Control Plans, and a Stormwater Pollution Prevention Plan. Contractor must submit all such required submittals before any physical construction work commences on the Site. NTP does not authorize construction work until all agreement insurance, bonds, and schedules are submitted to and accepted by the City.

6.1.3 The Agreement Time will be as set forth in the Project Schedule. Contractor agrees that it will commence performance of the Work and complete the Project through both Substantial Completion and Final Acceptance within the Agreement Time.

6.1.4 Time is of the essence of this Agreement, for the Project, for the Work, and for each phase and designated Milestone thereof.

6.1.5 Failure of Contractor to perform any covenant or condition contained in the Agreement Documents within the time periods specified herein, will constitute a material breach of this Agreement entitling City to terminate the Agreement unless Contractor applies for and receives an extension of time, in accordance with the procedures set forth in the Agreement Documents.

6.1.6 Failure of City to insist upon the performance of any covenant or condition within the time periods specified herein, will not constitute a waiver of Contractor's duty to perform every other covenant or condition within the designated periods, unless a specific waiver is granted in writing for each such covenant or condition.

6.1.7 City's agreement to waive a specific time provision or to extend the time for performance will not constitute a waiver of any other time provisions contained in the Agreement Documents. Failure of Contractor to complete performance promptly within the additional time authorized in the waiver or extension of time agreement constitutes a material breach of this Agreement entitling City to all the remedies set forth herein or provided by law.

6.2 PROJECT SCHEDULE

6.2.1 The Project Schedule must be in Microsoft Project standard file format, must be updated and maintained throughout the Agreement Time, and must contain the following:

6.2.1.1 Detailed representation of all activities for the project, both on-site construction and major procurement. All significant activities together with the resource loading requirements for each and all items appearing on the schedule of values or bid schedule for progress payments must be shown on the Project Schedule or in attached transmittal letter as described in Section 6.2.8.

Docusign Envelope ID: 8BAB3782-3942-4079-A0AA-BE0EB9A8D601

6.2.1.2 Dependencies between activities must be indicated so that it may establish as to the effect the progress of any one activity would have on other activities and on the Schedule.

6.2.1.3 Activities for submission, review, and approval of all required submittals.

6.2.1.4 An amount of time will be established prior to the final completion date for "punch list and cleanup". No other activities will be scheduled during this period. Punch list and cleanup must be shown on the Project Schedule and must be entirely completed prior to the expiration of the Agreement Time.

6.2.2 Within 10 Days of receipt of City's comments, Contractor must make all required corrections, adjustments, and additions to complete the Project Schedule and resubmit to City for review. City's review of and response to the Project Schedule is for the purpose of: (1) City planning and staffing for the Project as may be required from time to time; (2) ensuring Contractor's general conformance with the scheduling requirements of the Agreement Documents and completion of the Project within the Agreement Time; and (3) monitoring and evaluating the construction status for purposes of approving monthly progress payments. Acceptance of a submitted schedule by City should in no way be construed as an affirmation or admission that the schedule is reasonable or workable by Contractor. The responsibility for completing the Work on the Project within the Agreement Time remains the obligation of Contractor. City's review does not relieve Contractor from compliance with the requirements of the Agreement Documents or be construed as relieving Contractor of its complete and exclusive control over the means, methods, sequences and techniques for executing the work.

6.2.3 The Project Schedule must show milestones, including milestones for City-furnished information, and must include activities for City-furnished material and construction by other contractors when those activities are interrelated with Contractor activities.

6.2.4 The Project Schedule must be revised as required by conditions and progress of the Work, but such revisions do not relieve Contractor of its obligations to complete the Work within the Agreement Time, as adjusted in accordance with the Agreement Documents. No modification to the Agreement Documents or the Agreement Time will be effective unless approved in advance by City.

6.2.5 For all items of materials and equipment that are critical or may require long lead times to acquire, the Project Schedule must show dates for submission, review and approval of submittals, ordering, and delivery.

6.2.6 An updated Project Schedule must be submitted monthly to City as part of the Payment Request. The monthly submittal must include one full size plot of the entire schedule and one electronic copy containing the schedule in Microsoft Project standard file format. In addition, Contractor must, upon request by City, provide a copy of all submitted schedule data in electronic format which must be clearly labeled with the Project description, scheduling program name and version number, and schedule print/data date.

6.2.7 Contractor must provide City with a monthly status report with each Project Schedule detailing the progress of the Work, including: (i) if the Work is proceeding according to schedule, (ii) any discrepancies, conflicts, or ambiguities found to exist in the Agreement Documents that require resolution, and (iii) other information detailing items that require resolution so as not to jeopardize the ability to complete the Work in the Agreement Time.

Docusign Envelope ID: 8BAB3782-3942-4079-A0AA-BE0EB9A8D601

6.2.8 With each Project Schedule submittal, Contractor must include a transmittal letter including the following:

a. Description of problem tasks, referenced to field instructions or requests for information (RFI's), as appropriate.

b. Current and anticipated delays including:

(i) Cause of the delay.

(ii) Corrective action and schedule adjustments to correct the delay.

(iii) Known or potential impacts and their delay on other activities, milestones, and their impact on the Substantial Completion and Final Acceptance dates.

(iv) Changes in construction sequence.

c. Pending items and status thereof including but not limited to:

(i) Time Extension requests;

(ii) Substantial Completion date status;

(iii) Final Acceptance date status.

d. If ahead of schedule, the number of calendar Days ahead.

e. If behind schedule, the number of calendar Days behind.

f. Other Project or scheduling concerns.

6.2.9 Critical Path Method (CPM).

6.2.9.1 Unless otherwise specified in the Agreement, the Project Schedule must include a Critical Path Method (CPM) diagram schedule showing the sequence of activities, the interdependence of each activity and identifies the Critical Path.

6.2.9.2 The CPM diagram schedule must be in calendar Days and indicate duration, earliest and latest start and finish dates for all activities, and total Float Times for all activities except critical activities. The CPM diagram must be presented in a time scaled graphical format for the Project as a whole.

6.2.9.3 The CPM diagram schedule must indicate all relationships between activities.

6.2.9.4 The activities making the Project Schedule must contain sufficient detail to assure that adequate planning has been done for proper execution of the Work and such that it provides an appropriate basis for monitoring and evaluation the progress of the Work. Individual activities must not exceed 30 Days in length, in most cases.

6.2.9.5 The CPM diagram schedule must be based upon activities, which coincide with the Schedule of Values.

6.2.9.6 The CPM diagram schedule must show all submittals associated with each work activity and the review time for each submittal.

6.2.10 Float Time.

6.2.10.1 The total Float Time within the overall schedule is for the exclusive use of City, but City may approve Contractor's use of Float as needed to meet Agreement Milestones and

Docusign Envelope ID: 8BAB3782-3942-4079-A0AA-BE0EB9A8D601

the Project completion date.

6.2.10.2 Contractor will not be allowed to sequence, hide, or reallocate Float Time through such strategies, as extending activity duration estimates to consume available Float, using preferential logic, or using extensive crew/resource sequencing, tec. No time extensions will be granted nor delay damages paid until a delay occurs which extends the Work beyond the Agreement Time.

6.2.11 City-Caused Delays. City-caused delays on the Project, if any, may be offset by City-caused time savings (i.e., Critical Path submittals returned in less time than allowed by the Agreement, approval of substitution requests and credit changes which result in savings of time to Contractor, etc.) In such an event, Contractor will not be entitled to receive a time extension or delay damages until all City-caused time savings are exceeded and the Agreement Time is also exceeded.

6.2.12 Rain-Related Delays. Contractor is required, in preparing the Project Schedule to take into account all relevant weather conditions, including normal rainfall and distribution. No additional compensation will be given for any rain-related delays or impacts on the Work or the Project Schedule. No time extension will be granted in the Project Schedule unless the rainfall during the construction of Work is unusually severe, was not reasonably anticipated, and the total rainfall was significantly in excess of the normal rainfall for the Project Site location. Normal rainfall for the Project will be determined from the 10-year average rainfall for the Site as measured by the National Oceanic and Atmospheric Administration or comparable source of reliable information for rainfall in Chandler, Arizona. In addition, the excessive rainfall must have actually impacted Work activities on the Critical Path and caused delay beyond any remaining Float at the time of the rain- caused delay. The burden of documenting normal rainfall, the excessive rainfall and the impact on Critical Path activities is on Contractor. All other provisions in the Agreement Documents relating to claims, including without limitation notice requirements, apply to any claim by Contractor for a rain delay.

6.2.13 City's "Policy Statement for Calculating Delays and Damages," Appendix 1 to these General Conditions, will apply to all claims of delay and delay damages.

6.2.14 Force Majeure. If Contractor is delayed or prevented from the performance of any Work required under this Agreement by reason of acts of God or other causes beyond the control and without fault of Contractor (financial inability excepted), performance of that Work will be excused, but only for the period of the delay. The time for performance of the Work will be extended for a period equivalent to the period of delay. In addition, the parties agree if Contractor's delayed or suspended performance directly arises out of or directly results from the COVID-19 pandemic, Contractor's delayed or suspended performance may be excused as set forth in this clause. Provided, however; Contractor must give the City written notice within 30 days of the occurrence of the event giving rise to COVID-19 pandemic related delayed or suspended performance. For COVID-19 pandemic related delay or suspended performance, the parties must agree in writing to the length of the excused delay or suspended performance. Further, Contractor must obtain the City's written approval to use any allowance established as part of the project for delays and costs related to the COVID-19 pandemic.

6.3 SUBSTANTIAL COMPLETION

6.3.1 When Contractor considers that the Work, phase or a portion thereof, which City agrees in

Docusign Envelope ID: 8BAB3782-3942-4079-A0AA-BE0EB9A8D601

writing to accept separately, is substantially complete, City will prepare and submit to Contractor a comprehensive Punch List of items to be completed or corrected prior to Final Acceptance and Final Payment. Failure to include an item on such Punch List does not alter the responsibility of Contractor to complete all Work in accordance with the Agreement Documents.

6.3.2 Upon receipt of Contractor's Punch List, Project Manager will make an inspection to determine whether the Work or designated portion thereof is substantially complete. Project Manager may, at Project Manager's sole option, be assisted in such inspection by the Design Professional for the Project. If the inspection by the Project Manager discloses any item, whether or not included on Contractor's Punch List, which is not sufficiently completed in accordance with the Agreement Documents so that City can occupy or utilize the Work, phase or designated portion thereof for its intended use, Contractor must, before issuance of the Certificate of Substantial Completion, complete or correct such item upon notification by Project Manager. In such case, Contractor must then submit a request for another inspection by Project Manager to determine Substantial Completion.

6.3.3 Certificate of Substantial Completion.

6.3.3.1 The Project Manager will not issue a Certificate of Substantial Completion unless and until the Work (or separable units or Phases as provided in the Agreement Documents) is essentially and satisfactorily complete in accordance with the Agreement Documents, such that the Project is ready for use by City for its intended purpose, opening to the general public, full occupancy or use by City (including, without limitation, all separate units, or rooms, facilities, access, income-generating areas, and all areas serving the general public, as applicable, must be ready for full-operation without material inconvenience or discomfort), including, to the extent applicable to the Work, the following: all materials, equipment, systems, controls, features, facilities, accessories and similar elements are installed in the proper manner and in operating condition, inspected and approved; surfaces have been painted; masonry and concrete cleaned with any sealer or other finish applied; utilities and systems connected and functioning; site work complete; permanent heating, ventilation, air condition, vertical transportation and other systems properly operating with proper controls; lighting and electrical systems installed, operable and controlled; paving completed, signage installed, and other Work as applicable, has been performed to a similar state of essential and satisfactory completion. A minor amount of Work, as determined by and at the discretion of the Project Manager, such as installation of minor accessories or items, a minor amount of painting, minor replacement of defective work, minor adjustment of controls or sound systems, or completion or correction of minor exterior work that cannot be completed as a result of weather conditions, will not delay determination of Substantial Completion. If prior written approval is obtained from City for purposes of Substantial Completion, specified areas of the entire Work or Project may be individually certified as Substantially Complete. In no event will Substantial Completion be deemed to have occurred unless and until: (i) a temporary certificate of occupancy has been issued by the appropriate Governmental Authorities (as applicable) and (ii) all terms and Work required under this Agreement have been fulfilled by Contractor and same will have also been approved and accepted by City, subject only to the Punch List items.

6.3.3.2 If requested by City, Contractor must complete and turn-over to City the Project on a phased basis. Each phase will have a separate inspection by the Project Manager, a Punch List generated, and then an inspection by City with final approval and acceptance only after the

Docusign Envelope ID: 8BAB3782-3942-4079-A0AA-BE0EB9A8D601

Project Manager's Punch List.

6.4 **PARTIAL UTILIZATION**

6.4.1 City at City's option may use and occupy any substantially completed parts of the Work which has specifically been identified in the Agreement Documents, or which City, the Design Professional and Contractor agree constitutes a separately functioning and usable part of the Work that can be used by City for its intended purpose, without significant interference with Contractor's performance of the remainder of the Work, provided, however, if the portion of the Work to be used or occupied has not been found to be substantially complete, City must do so in accordance with Section 6.3 prior to such occupancy.

6.4.2 In lieu of the issuance of a Certificate of Substantial Completion as to part of the Work, City may take over operation of a facility constituting part of the Work whether or not it is substantially complete if such facility is functionally and separately usable; provided that prior to any such takeover, City and Contractor agree in writing as to the division of responsibilities between City and Contractor for security, operation, safety, maintenance, correction period, heat, utilities and insurance with respect to such facility.

6.4.3 Substantial Completion of or City's beneficial occupancy of a part of the Project will not alter the fact that the one-year warranty for the whole Project starts at the date of Final Completion of the whole Project.

6.5 **FINAL ACCEPTANCE**

6.5.1 Unless otherwise expressly agreed to in writing by City, Final Acceptance must be obtained by no later than 30 Days (60 Days for federally funded agreements) after the date of Substantial Completion. Failure to timely obtain Final Acceptance will be a material breach of the Agreement.

6.5.2 Upon receipt of written notice that the Work is ready for final inspection and acceptance, City and Contractor will jointly inspect to verify that the remaining items of Work have been completed. There will be no partial acceptance. Final Acceptance will not occur until all items of Work, including Punch List Items, have been completed to City's satisfaction as reflected in the written Final Acceptance.

6.5.3 Final Payment will not be due, owing, or paid by City until Final Acceptance is issued.

6.5.4 Landscape Establishment Period. Unless otherwise expressly agreed to in writing by City, the Landscape Establishment Period will begin on the date of Final Acceptance of the Project and will run 90 Calendar Days thereafter. Landscape Establishment Period requirements are detailed in General Conditions Appendices, attached herein.

6.6 **CONTINUATION OF WORK**

6.6.1 Permitting Contractor to continue and finish the Work or any part of it after the time fixed for its completion (whether milestone, phase, Substantial Completion or Final Acceptance) or after the date to which the time fixed for any completion may have been extended, does not operate as a waiver by City of any rights under the Agreement Documents, law or equity.

6.6.2 Furthermore, the timely completion of the Work being of the utmost importance under this Agreement, notwithstanding the existence of one or more disputes between the parties

Docusign Envelope ID: 8BAB3782-3942-4079-A0AA-BE0EB9A8D601

concerning the scope of the Work, the Project Schedule, Agreement Time, payments or any other matter, and further notwithstanding a party's invocation of the Dispute Resolution provisions specified in Appendix 6 of these General Conditions, unless City suspends the Agreement or Contractor's performance pursuant to Section 10 of these General Conditions, Contractor will continue to prosecute the Work, including any Change Order work or Extra Work Orders, in a diligent and timely manner and not stop, slow down or impede by action or inaction the progress of the Work, including commencing performance of and thereafter completing any additional work called out in any Change Order or Extra Work Order issued by Project Manager with the approval of City, so long as City makes payment to Contractor in accordance with Section 8 of these General Conditions.

SECTION 7 - AGREEMENT PRICE

7.1 UNIT PRICE AGREEMENTS

7.1.1 The Agreement Price for all Unit Price Agreements will be the amount set forth in the Agreement or Change Order multiplied by the verified quantity provided.

7.1.2 Measurements of quantities to determine the total Agreement Price must be in accordance with MAG Specification §§ 109.1 and 109.2.

7.1.3 The Unit Price may only be changed as set forth in Section 9 below.

7.2 CHANGE ORDERS

7.2.1 Unit Price Change Orders. The Change Order Price for all Unit Price Change Orders will be the amount set forth in the Change Order multiplied by the verified quantity provided.

7.2.2 Measurements of quantities to determine the total Change Order Price must be in accordance with MAG Specifications §§ 109.1 and 109.2.

7.2.3 The Unit Price may only be changed as set forth in Section 9 below.

7.2.4 MAG Specification § 109.4.1 is modified as follows: Before § 109.4.1, the following is added: Any deduction or increase in the Agreement Price must be supported by a signed, written Change Order fully executed by City, and supported by such backup as the Project Manager may require.

7.3 SALES TAX

Contractor is required to pay all applicable sales tax in accordance with the law of the state of Arizona and this cost must be included in all Agreement Prices. When equipment, materials or supplies generally taxable to Contractor are eligible for a tax exemption due to the nature of the Project, Contractor must assist City in applying for and obtaining such tax credits and exemptions which will be paid or credited to City.

SECTION 8 - PAYMENT

8.1 PAYMENT FOR CONSTRUCTION SERVICES

8.1.1 Payment for the Work will be made in accordance with MAG Standard Specification § 109 as amended below.

8.1.2 Contractor must submit to City for review a completed Contractor Payment Request signed

Docusign Envelope ID: 8BAB3782-3942-4079-A0AA-BE0EB9A8D601

by Contractor, covering the Work completed as of the date of the Request and accompanied by such supporting documentation as is required by the Agreement Documents and also as City may reasonably require. A Contractor Payment Request will not be considered complete unless it is accompanied by an updated Project Schedule and a certification that the on-site, red lined, as built Drawings are up to date. If payment is requested on the basis of materials and equipment not incorporated in the Work but delivered and suitably, securely stored at the Site or at another location (such as a bonded warehouse) agreed to in writing, the Contractor Payment Request must also be accompanied by such data, satisfactory to City, as will establish City's title to the material and equipment and protect City's interest therein, including applicable insurance. Each subsequent Contractor Payment Request must include an affidavit of Contractor stating that all previous progress payments received on account of the Work have been applied to discharge in full all of Contractor's obligations reflected in prior Contractor Payment Requests.

8.1.3 Except for Work performed under a JOC Agreement, the Contracting Agency will retain 10 percent of all estimates as a guarantee for complete performance of the Agreement in accordance with Arizona Revised Statutes Section 34-221 or 34-607. The Contractor may elect to deposit securities in lieu of retention in accordance with Arizona Revised Statutes Section 34-221, Paragraph C.5. or 34-607, Paragraph B.5.

8.1.4 The payment process functions as follows: Prior to the payment cycle date, Contractor must send a draft Contractor Payment Request to Project Manager. The Project Team will review the Request and agree upon any necessary adjustments. Contractor must certify the final Request by signing and returning to Project Manager.

8.1.5 When construction of the Project is fifty percent (50%) completed, Contractor may request payment of one-half of the retention pursuant to A.R.S. § 34-609(B)(3), subject to all of City's rights to withhold or offset payments, and other rights of City, under the Agreement.

8.1.6 City reserves the right under A.R.S. § 34-609(B)(3) to reinstate the ten percent (10%) retention if City determines that satisfactory progress is not being made.

8.1.7 <u>Contractor's Warranty of Title</u>.

8.1.7.1 Contractor warrants and guarantees that title to all Work, materials and equipment covered by any Contractor Payment Request, whether incorporated in the Project or not, will pass to City at the time of payment, free and clear of all liens, claims, security interests, and encumbrances, provided that this will not preclude the Contractor from installing metering devices or other equipment of utility companies or municipalities, the title of which is commonly retained by the utility company or municipality.

8.1.7.2 No materials, supplies, or equipment for the Work under this Agreement will be purchased subject to any chattel mortgage or under a conditional sale contract or other agreement by which an interest therein, or any part thereof, is retained by the seller or supplier.

8.1.7.3 Nothing contained in this Section will defeat or impair the right of such persons furnishing materials or labor under any bond given by the Contractor for their protection, or any right under any law permitting such persons to look to funds due the Contractor in the hands of the City. The provisions of this Section must be inserted in all subcontracts and material agreements, and notices of its provision must be given to all persons furnishing materials for the Work when no formal agreement is entered into for such materials.

Docusign Envelope ID: 8BAB3782-3942-4079-A0AA-BE0EB9A8D601

8.2 **PAYMENT UPON SUBSTANTIAL COMPLETION**

8.2.1 No payment will be made upon Substantial Completion, except for a regularly-scheduled monthly progress payment, as allowed by Section 8.2.2.

8.2.2 No further payments will be made to Contractor until Final Acceptance.

8.3 **FINAL PAYMENT**

8.3.1 Subject to all of City's rights to withhold or offset payment, and other rights under the Agreement, Final Payment including remaining retainage will be paid only after:

a. Work has been fully completed (including completion of all incorrect or incomplete work items) and the written Final Acceptance has been issued by City;

b. Necessary operating manuals, any excess materials and supplies necessary for matching materials and supplies incorporated into the Work, acceptable sewer video results (if applicable), and complete "as-built" Drawings (including the Building Information Model, if required by the Agreement Documents) have been delivered to City, as specified in this Section 8.3;

c. Full and unconditional lien waivers and releases by Contractor and any person performing labor or supplying material, machinery, fixtures, or tools for the Work have been delivered to Contractor;

d. All conditions and requirements imposed by City or any financing entity for the corresponding disbursement have been met; and

e. Contractor delivers to City a Contractor Payment Request requesting Final Payment.

8.3.2 Contractor must also submit a signed copy of Contractor's Affidavit Regarding Settlement of Claims, Appendix 3 to these General Conditions, and Certificate of Completion, Appendix 7 to these General Conditions, prior to Final Payment.

8.3.3 In addition, if required under the Project Specific Special Provisions, Contractor must compile a complete equipment list and maintenance manual to be submitted to City as a precondition to Final Payment. The list must include the following items for all equipment supplied under the Plumbing, Electrical, Air Conditioning, Elevator, and other Special Equipment Specifications:

a. Name, Model and Manufacturer.

b. Complete parts lists and Drawings.

c. Local source of supply for replacement parts along with suppliers' telephone numbers.

d. Local service organizations serving the equipment and their telephone numbers.

e. All tags, inspection slips, instruction packages, etc., removed from equipment must be properly identified as to pieces of equipment from which they were taken.

Docusign Envelope ID: 8BAB3782-3942-4079-A0AA-BE0EB9A8D601

8.3.4 Contractor must also deliver to City, prior to Final Payment, one (1) digital (in the format specified by City), and if requested by City, one (1) hard copy, of any applicable Maintenance manuals. Each manual must include all manufacturer's operation and maintenance instructions and "as-built" Drawings with the list herein specified. It must also include all other diagrams and instructions necessary to properly operate and maintain the equipment, the name, address and telephone number of Contractor and all Subcontractors involved.

8.4 **CITY'S RIGHT TO WITHHOLD PAYMENT**

City may withhold payment to such extent as may be necessary in City's opinion to protect City from loss for which Contractor is responsible, including, without limitation, if any of the following conditions exist:

a. Defective Work not remedied;

b. Third party claims filed or reasonable evidence indicating probable filing of such claims unless security acceptable to City is provided by Contractor;

c. Failure of Contractor to make payments properly to Subcontractors or for labor, materials or equipment;

d. Reasonable evidence that the Work cannot be completed for the unpaid balance of the Agreement Price;

e. Damage to City or another Contractor;

f. Reasonable evidence that the Work will not be completed within the Agreement Time, and that the unpaid balance would not be adequate to cover actual or liquidated damages for the anticipated delay;

g. Failure to carry out the Work in accordance with the Agreement Documents; or

h. Contractor is in default of any of its other obligations under the Agreement Documents.

8.5 **JOINT/DIRECT CHECKS**

To promote the timely completion and progress of the Work or when appropriate and necessary, payments to Contractor may be made jointly to Contractor and its employees, agents, Subcontractors and suppliers, or any of them. For federally funded agreements, see federal provisions for additional requirements for the joint check process.

8.6 **PAYMENT NOT A WAIVER**

No payment (nor use or occupancy of the Project by City) will be deemed acceptance or approval of the Work or as a waiver of any claims, rights, or remedies of City.

8.7 **LIENS AND BOND CLAIMS**

Contractor must make all payments, in the time required, of all labor and materials furnished to Contractor in the course of the Work and must promptly furnish evidence of such payments as City may require. Contractor must pay when due all claims arising out of performance of the Work covered by this Agreement for which a lien may be filed either against the real estate or leasehold interest of City, or against payments due from City to Contractor, or for which a claim may be made against any payment or performance bond or both. To the fullest extent permitted by law, Contractor agrees that no liens or other claims in the nature of a lien against the real estate, leasehold, or other interest of City,

Docusign Envelope ID: 8BAB3782-3942-4079-A0AA-BE0EB9A8D601

against payment due from City to Contractor, or against any payment or performance bond, must be filed or made in connection with the Work by any party who has supplied professional services, labor, materials, machinery, fixtures, tools, or equipment used in or in connection with the performance of this Agreement, and Contractor agrees to remove or to cause to be removed any such liens or claims in the nature of a lien or bond claim within 10 Days upon receiving notice or obtaining actual knowledge of the existence of such liens or claim. In addition, Contractor agrees to defend, indemnify, and hold harmless City from and against any and all such liens and claims. This paragraph does not apply to claims and liens of Contractor due to non-payment for work performed.

8.8 **FINANCIAL RECORDKEEPING AND CITY'S AUDIT RIGHT**

8.8.1 Records for all Agreements between City and Contractor must, upon reasonable notice, be open to inspection and subject to audit, scanning, and reproduction during normal business working hours. Such audits may be performed by any City's representative or any outside representative engaged by City for the purpose of examining such records. City or its designee may conduct such audits or inspections throughout the term of this Agreement and for a period of five years after Final Payment or longer if required by law. City's representatives may (without limitation) conduct verifications such as counting employees at the Site, witnessing the distribution of payroll, verifying information and amounts through interviews and written confirmations with Contractor employees, field and agency labor, Subcontractors, and vendors.

8.8.2 Contractor's "records" must include any and all information, materials and data of every kind and character, including without limitation, records, books, papers, documents, subscriptions, recordings, agreements, purchase orders, leases, contracts, commitments, arrangements, notes daily diaries, superintendent reports, drawings, receipts, vouchers and memoranda, and any and all other agreements, sources of information and matters that may in City's judgment have any bearing on or pertain to any matters, rights, duties or obligations under or covered by any Agreement Document. Such records must include (hard copy, as well as computer readable data if it can be made available), written policies and procedures; time sheets; payroll registers; payroll records; cancelled payroll checks; subcontract files (including proposals of successful and unsuccessful bidders, bid recaps, negotiation notes, etc.); original bid estimates; estimating work sheets; correspondence; Change Order files (including documentation covering negotiated settlements); back-charge logs and supporting documentation; invoices and related payment documentation; general ledger, information detailing cash and trade discounts earned, insurance rebates and dividends; and any other Contractor records which may have a bearing on matters of interest to City or the Project in connection with Contractor's dealings with City or the Project (all foregoing hereinafter referred to as "records") to the extent necessary to adequately permit evaluation and verification of any or all of the following:

a. Compliance with Agreement requirements for deliverables;

b. Compliance with approved Plans and Specifications;

c. Compliance with § 14.9 below;

d. Compliance with Agreement provisions regarding the pricing of Change Orders;

e. Accuracy of Contractor representations regarding the pricing of invoices; or

f. Accuracy of Contractor representations related to claims submitted by

Docusign Envelope ID: 8BAB3782-3942-4079-A0AA-BE0EB9A8D601

Contractor or any of their employees.

8.8.3 Contractor must require all payees (examples of payees include Subcontractors, Suppliers, Insurance Carriers, etc.) to comply with the provisions of this Section by including the requirements hereof in a written agreement between Contractor and payee. Contractor will ensure that all payees (including those entering into lump sum agreements) have the same right to audit provisions contained in this Agreement included in their agreements with Contractor.

8.8.4 City's authorized representative(s) (including, without limitation, Project Manager) must have reasonable access to Contractor's facilities, must be allowed to interview all current or former employees to discuss matters pertinent to the performance of this Agreement and must be provided adequate and appropriate work space, in order to conduct audits in compliance with this Section.

8.8.5 If an audit inspection or examination in accordance with this Section, discloses overpricing or overcharges to City (of any nature) by Contractor or Contractor's Subcontractors in excess of $100,000 in addition to making adjustments for the overcharges, the reasonable actual cost of City's audit must be reimbursed to City by Contractor. Any adjustments or payments which must be made as a result of any such audit or inspection of Contractor's invoices or records must be made within a reasonable amount of time (not to exceed 90 Days) from presentation of City's findings to Contractor.

8.8.6 In addition to the normal paperwork documentation Contractor typically furnishes to City, Contractor agrees to furnish, upon written request from City, any of the documentation necessary for City to exercise its audit rights under this Section 8.8 in computer readable file formats (Word, Excel, or .pdf), as City may designate.

8.8.7 City, its authorized representative, and the appropriate agency, reserve the right to audit Contractor's records in compliance with local, state or federal policies, statutes or at City's discretion, within three (3) years of Final Acceptance of the Work.

SECTION 9 - CHANGES TO THE AGREEMENT

9.1 **FIELD ORDERS**

City may authorize minor changes in the Work not involving an adjustment in the Agreement Price or the Agreement Times, which are consistent with the overall intent of the Agreement Documents. These may be accomplished by a written Field Order on the standard form approved and executed by City. Such Field Orders must be binding and Contractor must perform the change promptly. If Contractor believes that a Field Order justifies an increase in the Agreement Price or Agreement Time, Contractor may make a claim therefor as provided in Section 7.2.

9.2 **EXTRA WORK/CHANGES IN THE WORK**

9.2.1 City reserves the right to make such changes in the Plans and Specifications for the Work, as it may deem appropriate and any such change as set forth in a written Change Order must be deemed a part of this Agreement as if originally incorporated herein.

9.2.2 In the event City and Contractor cannot agree on the terms of a Change Order, or when circumstances otherwise require, the Project Manager has the authority to direct the Contractor to perform extra work, if the work in question is an item not provided for in the

Docusign Envelope ID: 8BAB3782-3942-4079-A0AA-BE0EB9A8D601

Agreement as awarded. The Project Manager will have the authority to determine, based upon factual evidence presented by the Contractor, whether the work in question is an item not provided for in the Agreement as awarded. If the Project Manager directs the Contractor to perform extra work, the Project Manager's instructions will include a price that the Contractor cannot exceed in charging the City for the extra work. Upon receipt of the Project Manager's directions to perform extra work, the Contractor must promptly proceed with the extra work and document the actual cost thereof. Contractor's right to payment for extra work will be determined under Subsection 9.2.4 below. The Contractor is responsible to manage the extra work to ensure that the price limits set by the Project Manager are not exceeded. Contractor must perform the extra work and submit documentation for the actual cost of the extra work to the City. A Change Order will be issued to cover this work.

9.2.3 Contractor will not be entitled to payment for extra work unless a written Change Order, in form and content prescribed by City, has been executed by City. On all requests for Change Orders, Contractor must specify the increased or decreased costs and whether it believes any extensions of time will be necessary to complete its Work as modified by the Change Order. If extra work is performed under Subsection 9.2.2 above, a corresponding Change Order will be prepared, approved and processed by City before payment can be made to Contractor.

9.2.4 In general, pricing for Change Orders will include the same mark-up percentages that were in effect when the Agreement was awarded. The cost or credit to the City resulting from a change in the Work is subject to Appendix 1 (Policy Statement for Calculating Delays and Damages) and will be determined, based on the type of pricing for the Agreement involved, as follows:

a. By mutual acceptance of a lump sum properly itemized in a form acceptable to City;

b. By unit prices stated in the Agreement Documents;

c. When the City determines that a Unit Price Book Job Order associated with a Job Order Agreement requires a Change Order, by using the same Total Cost Data and CCI that are in effect when the Change Order is anticipated to be issued; or

d. By actual cost and a percentage fee covering overhead and profit, as follows:

(i) Contractor will perform the extra work and be compensated for actual cost of labor, materials and equipment.

(ii) Contractor will have the right to add the fee percentage applicable to the Work under the Agreement, or if no such fee has been agreed to by the parties, not more than five percent (5%) to the Subcontractor's prices for authorized extra work performed solely by Subcontractors. Such percentage will include all of Contractor's charges for overhead, profit, administration and supervision.

(iii) Contractor or Subcontractor will have the right to add the fee percentage applicable to Work under the Agreement for self-performed extra work, or if no such fee has been agreed to by the parties, Contractor's or Subcontractor's maximum total allowable additions for overhead, profit, administration and supervision will

Docusign Envelope ID: 8BAB3782-3942-4079-A0AA-BE0EB9A8D601

not exceed ten percent (10%) of actual verifiable labor, materials and equipment for such self- performed extra work.

9.2.5 Any agreement which modifies the terms of the Agreement (including Change Orders) will be approved in writing by the Project Manager. Once properly executed by both parties, these modifications to the Agreement will have the same effect as if they had been included in the original Agreement.

9.3 **ACCURACY OF CHANGE ORDER PRICING INFORMATION**

9.3.1 Subject to Sections 9.3.2 through 9.3.4, signature by the contracting parties constitutes full accord and satisfaction between City and Contractor for all costs, damages, and expenses of whatever kind of nature, including delay, impact or acceleration damages, which may be occasioned by a Change Order of other modification of the Agreement agreed to in writing.

9.3.2 Accurate Change Order Pricing Information: Contractor agrees that it is responsible for submitting accurate cost and pricing data to City to support its Fixed Price, Unit Price, or Cost Plus Change Order Proposals or other Agreement Price adjustments under the Agreement. Contractor further agrees to submit Change Order proposals with cost and pricing data which is accurate, complete, current, and in accordance with the terms of the Agreement with respect to pricing of change orders. Contractor agrees that any "buy-out savings" on Change Orders will accrue 100% to Owner. "Buy-out savings" are defined as any savings negotiated by the Contractor with a Subcontractor or a Material Supplier after receiving approval of a Change Order amount that was designated to be paid to a specific Subcontractor or Supplier for the Approved Change Order work.

9.3.3 Right to Verify Change Order Pricing Information: Contractor agrees that City, through its designated representative, will have the right to examine, copy, and scan the records of the Contractor, Subcontractor or Sub-Subcontractor's records (during the Agreement period and up to three years after final payment is made on the Agreement) to verify the accuracy and appropriateness of the pricing data used to price all Change Order proposals or claims. Contractor agrees that if City determines the cost and pricing data submitted (whether approved or not) was inaccurate, incomplete, not current, or not in compliance with the terms of the Agreement regarding pricing of Change Orders, an appropriate Agreement Price adjustment will be made. Such post-approval Contact Price adjustments will apply to all levels of contractors and Subcontractors and to all types of Change Order proposals, specifically including Fixed Price, Unit Price, and Cost Plus Change Orders.

9.3.4 Requirements for Detailed Change Order Pricing Information: Contractor agrees to provide a detailed breakdown of allowable labor and labor burden cost (i.e., base wage rate of applicable classifications of workers, payroll taxes, and insurance and benefits costs). This information will be used to evaluate the potential cost of labor and labor burden related to Change Order work. It is intended that this information represent an accurate estimate of the Contractor's actual labor and labor burden cost components. Information is not intended to establish fixed billing or Change Order pricing labor rates. However, at the time Change Orders are priced, the submitted cost data for labor rates may be used to price Change Order work. The accuracy of any such agreed upon labor rate cost components used to price Change Orders will be subject to later audit. Approved Change Order amounts may be adjusted later to correct the impact of inaccurate labor cost components if the agreed upon labor cost components are determined to be inaccurate.

Docusign Envelope ID: 8BAB3782-3942-4079-A0AA-BE0EB9A8D601

9.4 **EMERGENCIES**

In any emergency affecting the safety of persons or property, Contractor will act, at its discretion, to prevent threatened damage, injury or loss. Any change in the Agreement Price or Agreement Time resulting from emergency work will be determined as provided in this Section.

9.5 **DIFFERING SITE CONDITIONS**

9.5.1 If Differing Site Conditions are encountered at the Project Site, then notice by the observing party must be given to the other party promptly before conditions are disturbed (to the extent practicable) and in no event later than 14 Days after first observance of the conditions. City will promptly investigate such conditions and, if City determines that Differing Site Conditions exist and they materially cause an increase in the cost of, or time required for, performance of any part of the Work, Contractor will be entitled to equitable adjustment in the Agreement Price or Construction Schedule (and other time requirements), or both. If it is determined by City that the conditions at the Project Site are not Differing Site Conditions and no change is justified, then City will so notify Contractor in writing, stating the reasons. Claims in opposition to such determination must be made within 14 Days after City has given notice of its decision. If City and Contractor cannot agree on an adjustment in the Agreement Price or Construction Schedule (and other time requirements), the adjustment may be submitted to dispute resolution as provided these General Conditions.

9.6 **CHANGES IN LAWS, REGULATIONS, OR LEGAL REQUIREMENTS OR TAXES**

In the event of a material change in applicable Laws, Regulations, or Legal Requirements, or taxes subsequent to the date of the Agreement by the parties, Contractor may be entitled to a Change Order, in City's discretion, to the extent Contractor can document to the satisfaction of City that such change significantly increases Contractor's actual cost of performance of the Work.

SECTION 10 -SUSPENSION AND TERMINATION

10.1 **SUSPENSION**

City may suspend the Agreement and Contractor's performance in accordance with MAG Specifications § 105.1 and 108.7.

10.2 **TERMINATION BY THE CITY FOR CAUSE**

10.2.1 MAG Specifications § 108.11 applies to the Agreement.

10.2.2 City may also terminate the Agreement if City determines, in its sole discretion that Contractor has:

a. After prior written notice, refused or failed to supply enough properly skilled workers or proper materials;

b. After prior written notice, failed to make payment to Subcontractors for materials or labor in accordance with the respective agreements between Contractor and the Subcontractors;

c. After prior written notice, disregards laws, ordinances, or rules, regulations or orders of a public authority having jurisdiction;

d. After prior written notice, repeatedly failed to comply with written directives from City;

Docusign Envelope ID: 8BAB3782-3942-4079-A0AA-BE0EB9A8D601

e. Is adjudged as bankrupt or insolvent;

f. Made a general assignment for the benefit of creditors;

g. Appointed a trustee or receiver for itself or any of its property;

h. Filed a petition to take advantage of any debtor's act, or to reorganize under the bankruptcy or similar laws; or

i. Otherwise breached a provision of the Agreement Documents or any other Agreement between City and Contractor.

10.2.3 When any of the above reasons exist, City may terminate the Agreement, without prejudice to any other rights or remedies of City, after giving Contractor and Contractors' surety, if any, 7 Days written notice of City's intent to terminate the Agreement and Contractor's failure to cure any such reasons. Upon such termination, City may: (1) take possession of the Site and of all materials thereon owned by Contractor; or (2) finish the Work by whatever reasonable method City may deem expedient. When City terminates the Agreement for one of the reasons state above, Contractor will not be entitled to receive further payment until the Work is finished. If the unpaid balance of the Agreement Price existing at the time of such termination exceeds the costs and expenses of finishing the Work and any other damages incurred by City, such excess will be paid to Contractor. If such costs, expenses and damages exceed such unpaid balance, Contractor must pay the difference to City. This obligation for payment will survive termination of the Agreement.

10.3 **TERMINATION BY CITY FOR CONVENIENCE**

City may also terminate the Agreement at any time for its convenience upon 7 Days written notice to Contractor specifying the termination date. In the event of termination which is not the fault, in whole or in part, of Contractor, City will pay to Contractor only such compensation, including reimbursable expenses, due for Work properly performed on the Project prior to the termination date. Upon any termination of the Agreement, no further payments will be due from City to Contractor.

10.4 **A.R.S. § 38-511**

The Agreement is subject to, and may be terminated by City in accordance with, the provisions of A.R.S. § 38-511.

SECTION 11 -INSURANCE AND BONDS

11.1 **INSURANCE REQUIREMENTS**

11.1.1 After Agreement award, the Contractor must furnish the City a certificate of insurance on a standard insurance industry ACORD form. The ACORD form must be issued by an insurance company authorized to transact business in the State of Arizona possessing a current A.M. Best, Inc. rating of A-7, or better and legally authorized to do business in the State of Arizona with policies and forms satisfactory to City. Provided, however, the A.M. Best rating requirement may not be deemed to apply to required Worker's Compensation coverage.

11.1.2 The Contractor and any of its Subcontractors must procure and maintain, until all of their obligations have been discharged, including any warranty periods under this Agreement are satisfied, the insurances set forth below.

11.1.3 The insurance requirements set forth below are minimum requirements for this Agreement and in no way limit the indemnity covenants contained in this Agreement.

Docusign Envelope ID: 8BAB3782-3942-4079-A0AA-BE0EB9A8D601

11.1.4 The City in no way warrants that the minimum insurance limits contained in this Agreement are sufficient to protect Contractor from liabilities that might arise out of the performance of the Agreement services under this Agreement by Contractor**,** its agents, representatives, employees, or Subcontractors and the Contractor is free to purchase any additional insurance as may be determined necessary.

11.1.5 Failure to demand evidence of full compliance with the insurance requirements in this Agreement or failure to identify any insurance deficiency will not relieve the Contractor from, nor will it be considered a waiver of its obligation to maintain the required insurance at all times during the performance of this Agreement.

11.1.6 Use of Subcontractors: If any Work is subcontracted in any way, the Contractor must execute a written agreement with Subcontractor containing the same Indemnification Clause and Insurance Requirements as the City requires of the Contractor in this Agreement. The Contractor is responsible for executing the Agreement with the Subcontractor and obtaining Certificates of Insurance and verifying the insurance requirements.

11.2 **MINIMUM SCOPE AND LIMITS OF INSURANCE**

11.2.1 The Contractor must provide coverage with limits of liability not less than those stated below.

11.2.1.1 Commercial General Liability-Occurrence Form. Contractor must maintain "occurrence" form Commercial General Liability insurance with a limit of not less than $2,000,000 for each occurrence, $4,000,000 aggregate. Said insurance must also include coverage for products and completed operations, independent contractors, personal injury and advertising injury. If any Excess insurance is utilized to fulfill the requirements of this paragraph, the Excess insurance must be "follow form" equal or broader in coverage scope than underlying insurance.

11.2.1.2 Automobile Liability-Any Automobile or Owned, Hired and Non-Owned Vehicles. Contractor must maintain Business/Automobile Liability insurance with a limit of $1,000,000 each accident on Contractor owned, hired, and non-owned vehicles assigned to or used in the performance under this Agreement. If any Excess or Umbrella insurance is utilized to fulfill the requirements of this paragraph, the Excess or Umbrella insurance must be "follow form" equal or broader in coverage scope than underlying insurance.

11.2.1.3 Workers Compensation and Employers Liability Insurance. Contractor must maintain Workers Compensation insurance to cover obligations imposed by federal and state statutes having jurisdiction of Contractor employees engaged in the performance of Work under this Agreement and must also maintain Employers' Liability insurance of not less than $1,000,000 for each accident and $1,000,000 disease for each employee.

11.2.1.4 Builders' Risk/Installation Floater Insurance. The Contractor bears all responsibility for loss to all equipment or Work under construction. Unless waived in writing by the City the Contractor will purchase and maintain in force Builders' Risk/Installation Floater insurance on the entire Work until completed and accepted by the City. This insurance will be Special Causes of Loss policy form, (minimally including perils of fire, flood, lightning, explosion, windstorm and hail, smoke, aircraft and vehicles, riot and civil commotion, theft, vandalism, malicious mischief, and collapse), completed value, replacement cost policy form equal to the Agreement Price and all subsequent modifications. The Contractor's Builders'

Docusign Envelope ID: 8BAB3782-3942-4079-A0AA-BE0EB9A8D601

Risk/Installation Floater insurance must be primary and not contributory.

a. Builders' Risk/Installation Floater insurance must cover the entire Work including reasonable compensation for architects and engineers' services and expenses and other "soft costs" made necessary by an insured loss. Builders' Risk/Installation Floater insurance must provide coverage from the time any covered property comes under the Contractor's control and or responsibility, and continue without interruption during course of construction, renovation and or installation, including any time during which any Project property or equipment is in transit, off Site, or while on Site for future use or installation. Insured property must include, but not be limited to, scaffolding, false work, and temporary buildings at the Site. This insurance must also cover the cost of removing debris, including demolition as may be legally required by operation of any law, ordinance, regulation or code.

b. The Contractor must also purchase and maintain Boiler and Machinery insurance with the same requirements as Builders' Risk/Installation Floater insurance cited above if the Work to be performed involves any exposures or insurable property normally covered under a Boiler and Machinery insurance policy or made necessary as required by law or testing requirements in the performance of this Agreement. The Contractor will be responsible for any and all deductibles under these policies and the Contractor waives all rights of recovery and subrogation against the City under the Contractor- Builders' Risk/Installation Floater insurance described herein.

c. Builders' Risk/Installation Floater Insurance must be maintained until whichever of the following first occurs: (i) final payment has been made; or, (ii) until no person or entity, other than the City, has an insurable interest in the property required to be covered.

d. The Builders' Risk/Installation Floater insurance must be endorsed so that the insurance will not be canceled or lapse because of any partial use or occupancy by the City.

e. The Builders Risk/Installation Floater insurance must include as named insureds, the City, the Contractor, and all tiers of Subcontractors and others with an insurable interest in the Work who will be named as additional insureds unless they are able to provide the same level of coverage with the City and Contractor named as additional insureds. Certificates must contain a provision that the insurance will not be canceled or materially altered without at least 30 Days advance notice to the City. The City must also be named as a Loss Payee under the Builders' Risk/Installation Floater coverage.

f. The Builders Risk/Installation Floater insurance must be written using the Special Causes of Loss policy form, replacement cost basis.

g. All rights of subrogation under the Builders Risk/Installation Floater insurance are, by this Agreement, waived against the City, its officers, officials, agents and employees.

h. The Contractor is responsible for payment of all deductibles under the Builders' Risk/Installation Floater insurance policy.

Docusign Envelope ID: 8BAB3782-3942-4079-A0AA-BE0EB9A8D601

11.2.1.5 Pollution Liability Insurance (Including Errors and Omissions). For Job Orders, Pollution Liability Insurance is only required if applicable and determined on a project specific basis. Contractor must maintain Pollution Liability Insurance with a limit of not less than $5,000,000 per loss, $5,000,000 aggregate for losses caused by pollution conditions including coverage for bodily injury, property damage, defense costs, clean-up costs, and completed operations that arise from the operations of Contractor as described in this Agreement.

a. The policy must provide for complete professional service coverage, including coverage for pollution liability that is a result of a breach of professional duties.

b. The policy must provide for protection again claims for third-party bodily injury, property damage, or environmental damage caused for pollution conditions resulting from general contracting activities for which Contractor is legally liable.

c. The policy must provide for cleanup costs when mandated by governmental entities, when required by law, or as a result of third-party claims.

d. Completed Operations Coverage must be kept in place for up to the statute of repose.

e. The policy must be endorsed to include the following additional insured language: "City, its elected officials, trustees, employees, agents, and volunteers must be named as additional insureds with respect to liability arising out of the activities performed by, or on behalf of Contractor".

f. If Work under this Agreement requires the transportation of any hazardous material or regulated substances, Contractor must carry Auto Liability with a CA 9948 endorsement or equivalent.

g. If Work under this Agreement requires the disposal of any hazardous materials from the job site, Contractor must obtain a certificate of insurance for Pollution Legal Liability from the disposal site operator with a limit of not less than $5,000,000 per loss, $5,000,000 aggregate.

11.3 **ADDITIONAL POLICY PROVISIONS REQUIRED**

11.3.1 Self-Insured Retentions or Deductibles. Any self-insured retentions and deductibles must be declared and approved by the City. If not approved, the City may require that the insurer reduce or eliminate any deductible or self-insured retentions with respect to the City, its officers, officials, agents, employees, and volunteers.

11.3.2 The Contractor's insurance must contain broad form contractual liability coverage.

11.3.3 The Contractor's insurance coverage must be primary insurance with respect to the City, its officers, officials, agents, and employees. Any insurance or self-insurance maintained by the City, its officers, officials, agents, and employees will be in excess of the coverage provided by the Contractor and must not contribute to it.

11.3.4 The Contractor's insurance must apply separately to each insured against whom claim is made or suit is brought, except with respect to the limits of the insurer's liability.

11.3.5 Coverage provided by the Contractor must not be limited to the liability assumed under the

Docusign Envelope ID: 8BAB3782-3942-4079-A0AA-BE0EB9A8D601

indemnification provisions of this Agreement.

11.3.6 The policies must contain a severability of interest clause and waiver of subrogation against the City, its officers, officials, agents, and employees, for losses arising from Work performed by the Contractor for the City.

11.3.7 The Contractor, its successors and or assigns, are required to maintain Commercial General Liability insurance as specified in this Agreement for a minimum period of 3 years following completion and acceptance of the Work. The Contractor must submit a Certificate of Insurance evidencing Commercial General Liability insurance during this 3 year period containing all the Agreement insurance requirements, including naming the required Additional Insureds set forth herein.

11.3.8 If a Certificate of Insurance is submitted as verification of coverage, the City will reasonably rely upon the Certificate of Insurance as evidence of coverage but this acceptance and reliance will not waive or alter in any way the insurance requirements or obligations of this Agreement.

11.3.9 Insurance Cancellation During Agreement Term.

11.3.9.1 If any of the required policies expire during the life of this Agreement, the Contractor must forward renewal or replacement Certificates to the City within 10 Days after the renewal date containing all the required insurance provisions.

11.3.9.2 Each insurance policy required by the insurance provisions of this Agreement must provide the required coverage and must not be suspended, voided or canceled except after 30 Days prior written notice has been given to the City, except when cancellation is for non-payment of premium, then 10 Days prior notice may be given. Such notice must be sent directly to Chandler Law-Risk Management Department, Post Office Box 4008, Mailstop 628, Chandler, Arizona 85225. If any insurance company refuses to provide the require notice, the Contractor or its insurance broker must notify the City of any cancellation, suspension, non-renewal of any insurance within 7 Days of receipt of insurers' notification to that effect.

11.3.10 City as Additional Insured. The above-referenced policies are to contain, or be endorsed to contain, the following provisions:

11.3.10.1 The Commercial General Liability and Automobile Liability policies are to contain, or be endorsed to contain, the following provisions: The City, its officers, officials, agents, and employees are additional insureds with respect to liability arising out of activities performed by, or on behalf of, the Contractor including the City's general supervision of the Contractor; Products and Completed Operations of the Contractor; and automobiles owned, leased, hired, or borrowed by the Contractor.

11.3.10.2 The City, its officers, officials, agents, and employees must be additional insureds to the full limits of liability purchased by the Contractor even if those limits of liability are in excess of those required by this Agreement.

11.4 BONDS AND OTHER PERFORMANCE SECURITY

11.4.1 After Agreement award, Contractor must provide a Performance Bond and a Payment Bond, each in an amount equal to the full amount of the Agreement Price.

11.4.2 Each such bond must be executed by a surety company or companies holding a Certificate

Docusign Envelope ID: 8BAB3782-3942-4079-A0AA-BE0EB9A8D601

of Authority to transact surety business in the State of Arizona, issued by the Director of the Arizona Department of Insurance and must be named in the current list of "Companies Holding Certificates of Authority as Acceptable Sureties on Federal Bonds and as Acceptable Reinsuring Companies" as published in Circular 570 (amended) by the Audit Staff Bureau of Accounts, U.S. Treasury Department. A copy of the Certificate of Authority must accompany the bonds. The Certificate must have been issued or updated within two (2) years prior to the execution of this Agreement. The bonds must be written or countersigned by an authorized representative of the surety who is either a resident of the state of Arizona or whose principal office is maintained in this state, as by law required.

11.4.3 The bonds must be made payable and be acceptable to City. The bond forms for the performance and payment bonds must be in the forms required under A.R.S. § 34-221, *et. Seq.,* as in Appendices 4 and 5 of these General Conditions.

11.4.4 Upon the request of any person or entity appearing to be a potential beneficiary of bonds covering payment of obligations arising under the Agreement Documents, Contractor must promptly furnish a copy of the bonds or must permit a copy to be made.

11.4.5 All bonds submitted for this Project must be provided by a company which has been rated AM Best rating of A- or better for the prior four quarters by the latest edition of the 'Results Best's Key Rating Guide (Property/Casualty)" published by the A.M. Best Company.

11.4.6 Personal or individual bonds are not acceptable.

11.4.7 If the surety on any Bond furnished by Contractor is declared a bankrupt or becomes insolvent, or Contractor's right to do business is terminated in any state where any part of the Project is located, or it ceases to meet the requirements of this Section 11.4, Contractor must within 5 Days thereafter substitute another Bond and surety, both of which must be acceptable to City.

SECTION 12 - INDEMNIFICATION

12.1 To the extent permitted by law, the Contractor and its owners, officers, directors, agents, employees, and subconsultants (collectively "lndemnitor") must indemnify, save, and hold harmless the City and its officers, officials, agents, and employees (collectively "lndemnitee") from any and all claims, actions, liabilities, damages, losses, or expenses (including court costs, attorneys' fees, and costs of claim processing, investigation, and litigation) (collectively "Claims") caused or alleged to be caused, in whole or in part, by the negligent, reckless, wrongful, or willful acts, errors, or omissions of Indemnitor in connection with this Agreement. This indemnity includes any Claim or amount arising out of or recovered under workers' compensation laws or on account of Indemnitor's failure to conform to any federal, state, or local law, statute, ordinance, rule, regulation, or court decree. Indemnitor must indemnify lndemnitee from and against any and all Claims, except those arising solely from lndemnitee's own negligent, reckless, wrongful, or willful acts, errors, or omissions. Indemnitor is responsible for primary loss investigation, defense, and judgment costs where this indemnification applies. In consideration of the award of this Agreement, Indemnitor agrees to waive all rights of subrogation against lndemnitee for losses arising from or related to this Agreement. Indemnitor's obligations under this provision survive the termination or expiration of this Agreement.

SECTION 13 -DISPUTE RESOLUTION

Docusign Envelope ID: 8BAB3782-3942-4079-A0AA-BE0EB9A8D601

13.1 All disputes arising out of or relating to the Agreement, the Work or the Project, other than termination under Section 10, will be resolved pursuant to the Dispute Resolution process set forth in Appendix 6 of these General Conditions, and not pursuant to MAG Specifications § 110.

13.2 Contractor agrees that during any dispute between the parties, Contractor will continue to perform its obligations under the Agreement until such dispute is resolved.

13.3 Notwithstanding any other provision in this Agreement, City has the right to immediately file in court and pursue an action for a temporary restraining order and injunctive relief against Contractor if City determines that such action is necessary to protect its interests under the Agreement, to obtain specific performance of any provision of the Agreement, to advance the completion of the Project, or to protect health, welfare and safety.

SECTION 14 - MISCELLANEOUS PROVISIONS

14.1 AGREEMENT DOCUMENTS

14.1.1 The Agreement Documents are intended to permit the parties to complete the Work and all obligations required by the Agreement Documents within the Agreement Times for the Agreement Price. The Agreement Documents are intended to be complementary and interpreted in harmony so as to avoid conflict, with words and phrases interpreted in a manner consistent with construction and design industry standards.

14.1.2 It is the intent of the Agreement Documents to describe a functionally complete Project (or part thereof) to be constructed in accordance with the Agreement Documents. Any labor, documentation, services, materials, or equipment that may reasonably be inferred from the Agreement Documents or from prevailing custom or trade usage as being required to produce the intended result must be provided by Contractor whether or not specifically called for at no additional cost to City.

14.1.3 The Agreement Documents establish the rights and obligations of the parties and include the Agreement, Addenda (which pertain to the Agreement Documents), Contractor's Bid or Proposal (including documentation accompanying the Bid and any post-Bid documentation submitted prior to Agreement award) when attached as an exhibit to the Agreement, the accepted Project Schedule, the Notice to Proceed, the Performance Bond, the Payment Bond, Project Design, Engineering and Specifications, these General Conditions, the Project Specific Special Provisions, Technical Specifications, Agreement Drawings, as the same may be more specifically identified in the Agreement, Change Orders, Work Change Directives, Field Orders and the written interpretations and clarifications of the Design Professional or City representative and Modifications issued after execution of the Agreement. Approved Shop Drawings and the reports and drawings of subsurface and physical conditions are not Agreement Documents.

14.1.4 In the event of any inconsistency, conflict, or ambiguity between or among the Agreement Documents, the Agreement Documents will take precedence as follows from highest to lowest: Change Orders, Addenda, Agreement, Project Specific Special Provisions, General Conditions, Technical Specifications, Drawings/Plans, Chandler Amendments to MAG Standard Specifications and Chandler Standard Details, and MAG Uniform Standard Specifications and Details for Public Works Construction. If applicable to this Agreement, Federal Provisions prevail.

Docusign Envelope ID: 8BAB3782-3942-4079-A0AA-BE0EB9A8D601

14.1.5 On the Drawings, given dimensions will take precedence over scaled measurements and large scale drawings over small-scale drawings.

14.1.6 Clarifications and interpretations of the Agreement Documents will be issued by the Design Professional through the City.

14.1.7 The headings used in this Agreement or any other Agreement Documents, are for ease of reference only and must not in any way be construed to limit or alter the meaning of any provision.

14.1.8 The Agreement Documents form the entire agreement between City and Contractor. No oral representations or other agreements have been made by the parties except as specifically stated in the Agreement Documents.

14.1.9 The Agreement Documents may not be changed, altered, or amended in any way except in writing signed by a duly authorized representative of each party in the form of a Change Order.

14.1.10 Re-Use of Documents. Neither Contractor nor any Subcontractor, manufacturer, fabricator, supplier or distributor will have or acquire any title to or ownership rights in any of the Drawings, Specifications or other documents (or copies of any thereof) prepared by or bearing the seal of the Design Professional; and they must not re-use any of them on extensions of the Project or any other project without written consent of City and the Design Professional and specific written verification or adaptation by the Design Professional.

14.2 REFERENCE STANDARDS

14.2.1 Reference to standards, specifications, manuals, or codes of any technical society, organization, or association, or to Laws or Regulations, whether such reference be specific or by implication, will mean the standard, specification, manual, code, or Laws or Regulations in effect at the time of opening of Bids (or on the Effective Date of the Agreement if there were no Bids), except as may be otherwise specifically stated in the Agreement Documents.

14.2.2 The provisions of any such standard, specification, manual or code, or any instruction of a Supplier will not change the duties or responsibilities of City, Contractor, Design Professional or Project Manager, or any of their Subcontractors, consultants, agents, or employees from those set forth in the Agreement Documents, nor will any such provision or instruction assign to City, Contractor, Design Professional, or any of their agents, or employees any duty or authority to supervise or direct the performance of the Work or any duty or authority to undertake responsibility inconsistent with the provisions of the Agreement Documents.

14.3 COMPLIANCE WITH ARIZONA LAW AND FEDERAL LAW

14.3.1 Compliance with A.R.S. § 41-4401. Pursuant to the provisions of A.R.S. § 41-4401, the Contractor hereby warrants to the City that the Contractor and each of its subcontractors ("Subcontractors") must comply with all Federal Immigration laws and regulations that relate to the immigration status of their employees and the requirement to use E-Verify set forth in A.R.S. §23-214(A).

14.3.2 A breach of the Contractor Immigration Warranty constitutes a material breach of this Agreement and subject to penalties up to and including termination of this Agreement.

Docusign Envelope ID: 8BAB3782-3942-4079-A0AA-BE0EB9A8D601

14.3.3 The City retains the legal right to inspect the papers of any Contractor or Subcontractor employee who works on this Agreement to ensure that the Contractor or Subcontractor is complying with the Contractor Immigration Warranty. The Contractor agrees to assist the City in the conduct of any such inspections.

14.3.4 The City may, at its sole discretion, conduct random verifications of the employment records of the Contractor and any Subcontractors to ensure compliance with Contractors Immigration Warranty. The Contractor agrees to assist the City in performing any such random verifications.

14.3.5 The provisions of this Article must be included in any agreement the Contractor enters into with any and all of its subcontractors who provide services under this Agreement or any subcontract. "Services" are defined as furnishing labor, time or effort in the State of Arizona by a contractor or subcontractor. Services include construction or maintenance of any structure, building or transportation facility or improvement to real property.

14.4 **HAZARDOUS ENVIRONMENTAL CONDITIONS**

14.4.1 Contractor will not be responsible for any Hazardous Environmental Condition uncovered or revealed at the Site which was not shown or indicated in Drawings or Specifications or identified in the Agreement Document to be within the scope of the Work. Contractor will be responsible for a Hazardous Environmental Condition created with any materials brought to the Site by Contractor, Subcontractors, Suppliers, or anyone else for whom Contractor is responsible.

14.4.2 If Contractor encounters a Hazardous Environmental Condition or if Contractor or anyone for whom Contractor is responsible creates a Hazardous Environmental Condition. Contractor must immediately:

a. Secure or otherwise isolate such condition;

b. Stop all Work in connection with such condition and in any area affected thereby; and

c. Notify City and promptly thereafter confirm such notice in writing.

14.4.3 City will promptly retain a qualified expert to evaluate such condition or take corrective action, if any.

14.4.4 Contractor will be responsible for any and all civil or criminal penalties, fines, damages, or other charges imposed by any regulatory agency or court for sewage discharges that are in violation of applicable statutes and laws and that are a result, direct or indirect, of work performed under this Agreement. Contractor will also be responsible for reimbursement to City for administration, reporting, and tracking expenses required as a result of any spill event. In the event the regulatory agency or court imposes a probationary period, Contractor must post bond for the probationary period to ensure that all such costs are reimbursed to City. This responsibility will apply whether penalties are imposed directly on Contractor or any of its Subcontractors, or the City of Chandler. Contractor must defend and indemnify City against such penalties. Regulatory agencies may include, but are not limited to, the Arizona Department of Environmental Quality (ADEQ) and the United States Environmental Protection Agency (USEPA).

14.5 **COOPERATION AND FURTHER DOCUMENTATION**

Docusign Envelope ID: 8BAB3782-3942-4079-A0AA-BE0EB9A8D601

Contractor agrees to provide City such other duly executed documents as may be reasonably requested by City to implement the intent of the Agreement Documents.

14.6 **ASSIGNMENT**

Neither Contractor nor City will, without the written consent of the other assign, transfer or sublet any portion of this Agreement or part of the Work or the obligations required by the Agreement Documents, any such assignment will be void, will transfer no rights to the purported assignee, and would be a material breach of the Agreement.

14.7 **SUCCESSORS**

Contractor and City intend that the provisions of the Agreement Documents are binding upon the parties, their employees, agents, heirs, successors and assigns.

14.8 **LAWFUL PRESENCE**

Pursuant to A.R.S. §§ 1-501 and 1-502, City is prohibited from awarding an agreement to any natural person who cannot establish that such person is lawfully present in the United States. To establish lawful presence, a person must produce qualifying identification and sign a City-provided affidavit affirming the identification provided is genuine. This requirement will be imposed at the time of agreement award. This requirement does not apply to business organizations such as corporations, partnerships, or limited liability companies.

14.9 **NO BOYCOTT OF ISRAEL CERTIFICATION**

By Contractor's signature on this Agreement, Contractor certifies under A.R.S. § 35-393.01 that Contractor is not currently engaged in and for the duration of this Agreement will not engage in a boycott of Israel.

14.10 **NO THIRD PARTY BENEFICIARY**

Nothing under the Agreement Documents will be construed to give any rights or benefits in the Agreement Documents to anyone other than City and Contractor, and all duties and responsibilities undertaken pursuant to the Agreement Documents will be for the sole and exclusive benefit of City and Contractor and not for the benefit of any other party, unless otherwise expressly set forth in the Agreement Documents.

14.11 **GOVERNING LAW AND VENUE**

The Agreement and all Agreement Documents will be deemed to be made under, and will be construed in accordance with and governed by the laws of the State of Arizona without regard to the conflicts or choice of law provisions thereof. Any court action to enforce any provision of the Agreement or to obtain any remedy with respect hereto must be brought in the Superior Court, Maricopa County, Arizona, and for this purpose, each party hereby expressly and irrevocably consents to the jurisdiction and venue of such Court.

14.12 **SEVERABILITY**

If any provision of the Agreement Documents or the application thereof to any person or circumstance will be invalid, illegal or unenforceable to any extent, the remainder of the affected provision, the remainder of the Agreement Documents, and the application thereof will not be affected and will be enforceable to the fullest extent permitted by law.

14.13 **LEGAL REQUIREMENTS**

At all times relevant to its entry into this Agreement and performance of the Services and the Work, Contractor must fully comply with all Laws, Regulations, or Legal Requirements applicable to City, the Project, and the Agreement, including, without limitation, those set

Docusign Envelope ID: 8BAB3782-3942-4079-A0AA-BE0EB9A8D601

forth on Exhibit C of the Agreement.

14.14 **PARTIAL INVALIDITY**

If any provision of the Agreement is held by a court of competent jurisdiction to be invalid, void or unenforceable, the remaining provisions will nevertheless continue in full force without being impaired or invalidated in any way.

14.15 **ATTORNEYS' FEES**

Should either party to the Agreement bring an action to enforce any provision of the Agreement, the prevailing party will be entitled to recover reasonable attorneys' fees and costs in connection therewith.

14.16 **CONFLICT OF INTEREST**

14.16.1 Contractor agrees to disclose any financial or economic interest with the Project property, or any property affected by the Project, existing prior to the execution of the Agreement. Further, Contractor agrees to disclose any financial or economic interest with the Project property, or any property affected by the Project, if Contractor gains such interest during the course of this Agreement. If Contractor gains financial or economic interest in the Project during the course of this Agreement, this may be grounds for terminating this Agreement. Any decision to terminate the Agreement must be at the sole discretion of City.

14.16.2 Contractor will not engage the services on this Agreement of any present City employee who was involved as a decision maker in the selection or approval processes, or who negotiated or approved billings or Agreement Modifications for this Agreement.

14.16.3 Contractor agrees that it will not perform services on this Project for a contractor, subcontractor, or any supplier, not covered under this Agreement.

14.17 **INDEPENDENT CONTRACTOR**

Contractor is and must be an independent contractor. Any provisions in the Agreement Documents that may appear to give City the right to direct Contractor as to the details of accomplishing the Work or to exercise a measure of control over the Work means that Contractor must follow the wishes of City as the results of the Work only. These results must comply with all applicable laws and ordinances.

14.18 **NOTICE OF INJURY**

Should City or Contractor suffer injury or damage to their person or property because of any error, omission or act of the other party or of any of the other party's employees or agents or others for whose acts the other party is legally liable, claim must be made in writing to the other party within 7 Days of the first observance of such injury or damage.

14.19 **CONFIDENTIALITY**

Contractor, for the benefit of City, hereby agrees it will not release or cause or permit to be released to the public any press notices, publicity (oral or written) or advertising promotion relating to, any statement regarding, or any other public announcement or disclosure or cause or permit to be publicly announced or disclosed, in any manner whatsoever, the specific terms and conditions of this Agreement or any comment relating to the Project or the Site. Notwithstanding the foregoing, Contractor will be entitled to disclose the terms of the Agreement to the extent required by law or in the course of enforcing or defending a claim or action hereunder. Contractor must give City reasonably prompt notice of any disclosure or statement made pursuant to this provision.

Docusign Envelope ID: 8BAB3782-3942-4079-A0AA-BE0EB9A8D601

14.20 **DATA CONFIDENTIALITY**

14.20.1 As used in the Agreement, "data" means all information, whether written or verbal, including plans, specifications, renderings, photographs, studies, investigations, audits, analyses, samples, reports, calculations, internal memos, meeting minutes, data field notes, work product, proposals, correspondence and any other similar documents or information prepared by, obtained by, or transmitted to the City in the performance of this Agreement.

14.20.2 Contractor agrees that all data, regardless of form, including originals, images, and reproductions, prepared by, obtained by, or transmitted to City in connection with the Contractor's performance of this Agreement is confidential and proprietary information belonging to City.

14.20.3 Except as specifically provided in this Agreement, Contractor or its Subcontractors must not divulge data to any third party without prior written consent of City. Contractor or its Subcontractors must not use data for any purposes except to perform Work required under this Agreement. These prohibitions will not apply to the following data provided Contractor has first given the required notice to City:

a. Data which was known to Contractor or its Subcontractors prior to its performance under this Agreement unless such data was acquired in connection with Work performed for City;

b. Data which was acquired by Contractor or its Subcontractors in its performance under this Agreement and which was disclosed to Contractor or its Subcontractors by a third party, who to the best of Contractor's or its Subcontractor's knowledge and belief, had the legal right to make such disclosure and Contractor or its Subcontractors are not otherwise required to hold such data in confidence; or

c. Data which is required to be disclosed by virtue of law, regulation, or court order, to which the Contractor or its Subcontractors are subject.

14.20.4 In the event the Contractor or its Subcontractors are required or requested to disclose data to a third party, or any other information to which the Contractor or its Subcontractors became privy as a result of any other agreement with City, the Contractor must first notify City as set forth in this Section of the request or demand for the data. The Contractor or its Subcontractors must give City sufficient facts so that City can be given an opportunity to first give its consent or take such action that City may deem appropriate to protect such data or other information from disclosure.

14.20.5 Unless prohibited by law, within 10 Days after completion of services for a third party on real or personal property owned or leased by City, the Contractor must promptly deliver, as set forth in this Section, a copy of all data to City. All data will continue to be subject to the confidentiality agreements of this Agreement.

14.20.6 Contractor or its Subcontractors assume all liability for maintaining the confidentiality of the data in its possession and agree to compensate City if any of the provisions of this Section are violated by Contractor, its employees, agents, or Subcontractors. Solely for the purposes of seeking injunctive relief, it is agreed that a breach of this Section will be deemed to cause irreparable harm that justified injunctive relief in court. Contractor agrees that the requirements of this Section will be incorporated into all subcontracts entered into by Contractor. A violation of this Section may result in immediate termination of this

Docusign Envelope ID: 8BAB3782-3942-4079-A0AA-BE0EB9A8D601

Agreement without notice.

14.21 **SURVIVAL**

All warranties, representations and indemnifications by Contractor must survive the completion or termination of this Agreement.

14.22 **COVENANTS AGAINST CONTINGENT FEES**

Contractor warrants that no person has been employed or retained to solicit or secure this Agreement upon an agreement or understanding for a commission, percentage, brokerage, or contingent fee, and that no member of City Council, or any employee of City has any interest, financially, or otherwise, in the firm. For breach or violation of this warrant, City will have the right to annul the Agreement without liability or at its discretion to deduct from the Agreement Price or consideration, the full amount of such commission, percentage, brokerage, or contingent fee.

14.23 **NO WAIVER**

The failure of either party to enforce any of the provisions of the Agreement Documents or to require performance of the other party of any of the provisions hereof must not be construed to be a waiver of such provisions, nor will it affect the validity of the Agreement Documents or any part thereof, or the right of either party to thereafter enforce each and every provision.

14.24 **NONEXCLUSIVE REMEDIES**

The remedies set forth in this Agreement are cumulative and not exclusive, and failure to exercise any remedy (including, without limitation, any right to terminate) will not preclude any party from exercising any other right in seeking any other remedy available to it at law or in equity.

14.25 **PROJECT COMMUNICATIONS**

14.25.1 All communications concerning the performance of the Work or the Project will be provided to the designated Project Manager and Contractor's Representative set forth in Article 1 of the Agreement. City may change the designated Project Manager and, subject to Section 4.4.20 of these General Conditions, Contractor may change Contractor Representative, by written notice to the other.

14.25.2 Project communications may be exchanged by e-mail, but email communications cannot change the terms of the Agreement or the Scope of Work, or effectuate any change that requires a written Change Order.

14.25.3 When any provisions of the Agreement Documents requires Contractor or the Design Professional to give written notice to City, it will be deemed to have been validly given if delivered in person or if delivered at or sent by registered or certified mail, postage prepaid, to the Parties indicated in Agreement Article 1, incorporated by reference.

14.25.4 When any provisions of the Agreement Documents requires City, Project Manager, or the Design Professional to give written notice to Contractor, it will be deemed to have been validly given if delivered in person to the person designated in the Agreement Documents as Contractor's Resident Superintendent, or if delivered at or sent by registered or certified mail, postage prepaid, to Contractor at the last address in the Agreement Documents or such substitute address which Contractor designates in writing, or to the business address known to the giver of notice.

Docusign Envelope ID: 8BAB3782-3942-4079-A0AA-BE0EB9A8D601

14.26 **DRUG FREE WORKPLACE PROGRAM**

14.26.1 City has adopted a policy establishing a drug free workplace for itself and as a requirement for Contractors doing business with City, to ensure the safety and health of employees working on City projects.

14.26.2 Contractor must require a drug free workplace for all employees working under the Agreement. Specifically, all employees of Contractor who are working under an agreement with City must be notified, in writing, by Contractor that they are prohibited from the manufacture, distribution, dispensation, possession or unlawful use of a controlled substance in the workplace.

14.27 Failure to require a drug free workplace in accordance with the City's policy may result in termination of the Agreement and possible debarment form bidding on future City projects.

SECTION 15 - PROVISIONS APPLICABLE SOLELY TO GMP AND COST-BASED AGREEMENTS, CHANGE ORDERS, AND JOB ORDERS

15.1 **ADDITIONAL DEFINITIONS**

The definitions set forth in Section 2 apply to GMP and Cost-Based Agreements, Change Orders, and Job Orders, together with the additional definitions set forth below.

Baseline Cost Model –
A breakdown and estimate of the scope of the Project developed by CM@Risk pursuant to Section 17.5 of these General Conditions.

CM@Risk or Construction Manager at Risk –
The person or firm selected by City to provide pre-construction and/or construction services as detailed in a Construction Manager at Risk Agreement with City. In these General Conditions, the term "Contractor" includes CM@Risk under both Pre-Construction and Construction Services Agreements.

CM@Risk Fee or Contractor's Fee –
An agreed to percentage in an accepted GMP that represents the Contractor's fee for performance of the Work.

Agreement Documents –
Where compensation under the Agreement is based upon a GMP accepted by City, the term "Agreement Documents" also includes the accepted GMP Proposal.

Agreement Price –
Where compensation under the Agreement based upon a GMP accepted by City, the term "Agreement Price" refers to the GMP.

Cost-Based Agreement, Change Order, or Job Order –
A Agreement, Change Order, or Job Order where the Agreement Price is based upon the actual cost of performing the Work, subject to the terms of the Agreement Documents, including this Section 15. These would include those generally referred to as "Cost of the Work plus a Fee with a GMP," "Time and Materials," or "Cost Plus a Fee."

Cost of the Work –
The direct costs necessarily incurred by Contractor in the proper, timely, and complete performance on the Work. The Cost of the Work will include only those costs set forth in Section 15.2 of these

Docusign Envelope ID: 8BAB3782-3942-4079-A0AA-BE0EB9A8D601

General Conditions.

Deliverables –
The work products prepared by Contractor in performing the scope of work described in the Agreement. Some of the major deliverables to be prepared and provided by Contractor during pre-construction may include but are not limited to: the Baseline Cost Model and Schedule that validate City's plan and budget, Construction Management Plan, Detailed Project Schedule, Schedule of Values, alternative system evaluations, procurement strategies and plans, Detailed Cost Estimates, construction market surveys, cash flow projections, GMP Proposals, Subcontractor procurement plan, Subcontractor agreements, Subcontractor bid packages, Supplier agreements, Constructability Review, Cost Control Log, Traffic control and phasing plans and others as indicated in this Agreement or required by the Project Team.

Pre-Construction Services Agreement –
The Agreement entered into between City and the CM@Risk for Pre-Construction Services to be provided by the CM@Risk, including, without limitation, the generation of a GMP Proposal. If the GMP Proposal is accepted by City and a Construction Agreement is entered into between City and CM@Risk, the duties, obligations and warranties of the CM@Risk under the Pre-Construction Services Agreement survive and are incorporated into the resulting Construction Agreement.

Pre-Construction Services –
The services to be provided under the Pre-Construction Services Agreement, including Section 17 of these General Conditions.

Detailed Project Schedule –
The Detailed Project Schedule developed by the CM@Risk for the review and approval of the Project Manager in accordance with Section 17.3 of these General Conditions, if applicable.

General Conditions Costs –
Those costs set forth in Section 4 of Appendix 9 to these General Conditions.

GMP Plans and Specifications –
The plan and specifications upon which the Guaranteed Maximum price Proposal is based.

GMP Proposal –
The proposal of Contractor submitted pursuant to Section 17.7 of these General Conditions for the entire Work and/or portion (phases) of the Work.

Guaranteed Maximum Price or GMP –
The Guaranteed Maximum Price set forth in the Agreement, Change Order, or Job Order if applicable.

15.2 **AGREEMENT PRICE**

15.2.1 The Agreement Price for all Agreements, Change Orders, and Job Orders based upon payment of the Cost of the Work plus a Fee with a GMP, time and materials, or cost-plus a fee will be the Cost of the Work incurred plus the Fee agreed to in writing by City, limited to the amount of the GMP, if agreed to. Unless otherwise expressly provided in the Agreement, Change Order, or Job Order, all Cost Based pricing will be subject to and limited to GMP.

15.2.2 The Agreement Price may only be changed as set forth in Section 9 above.

Docusign Envelope ID: 8BAB3782-3942-4079-A0AA-BE0EB9A8D601

15.2.3 Only costs specifically designated as reimbursable costs are eligible for payment by City or may be charged against the Agreement Price. All other costs will not be paid by City and will not be chargeable against the Agreement Price.

15.2.4 Cost-Based Agreements. For Agreements, Change Orders, or Job Orders, reimbursable costs must be determined pursuant to Appendix 9 to these General Conditions, Cost of the Work, and not by MAG Specifications §109.5.

15.3 **ALLOWANCES**

15.3.1 Contractor must include in the Agreement Price all Allowances stated in the Agreement Documents and agreed to in writing by City. Items covered by these Allowances must be supplied for such amounts and by such persons as City may direct, provided Contractor will not be required to employ persons against whom Contractor makes a reasonable objection. Materials, labor, and equipment under an Allowance will be selected by City in accordance with a schedule to be mutually agreed upon by City, Design Professional and Contractor or otherwise in reasonably sufficient time to avoid delay in the Work.

15.3.2 Unless otherwise provided in the Agreement Documents:

15.3.2.1 These Allowances must cover the cost to Contractor, less any applicable trade discount, of the materials, labor, and equipment required by the Allowances, delivered at the Site, and all applicable taxes;

15.3.2.2 Contractor's costs for unloading and handling on the Site, labor, installation costs, overhead, profit and other expenses relating to materials, labor, and equipment required by the Allowance must be included in the Agreement Sum and not in the Allowance; and

15.3.2.3 Whenever the cost is more or less than the Allowance, the Agreement Sum must be adjusted accordingly by Change Order, the amount of which will recognize the difference between actual costs for an Allowance item and the amount of the Allowance item and changes, if any, in handling costs on the Site, labor, installation costs, overhead, profit and other expenses.

15.4 **CONTINGENCY**

An agreed to amount in the GMP that may only be used in accordance with the terms set forth in these General Conditions and with prior written approval by the City.

15.4.1 Construction Contingency. This GMP includes a dollar amount listed as a Construction Contingency which will be readily available for increased costs for subcontractors, material, and equipment subject to prior approval of City, which approval will not be withheld unreasonably. The Construction Contingency may also be used, at the discretion of City, to reimburse CM@Risk for unexpected costs due to (a) scope gaps between trade subcontractors; (b) agreement default by trade subcontractors; (c) unforeseen field conditions, but only as defined in Section 9.5 above; (d) work completed to meet the intent of the design, but which was not indicated on the plans; (e) costs overruns not covered by allowances; (f) costs of corrective work not provided for elsewhere; and (g) implementation of any Recovery Plan. Cost for which CM@Risk desires to be paid from the Construction Contingency must be documented by CM@Risk on a time and materials basis and are subject to verification by City. If agreed to by City, a "Use of Contingency" form will be executed by both parties authorizing the actual cost of the work to be paid and included in the Work Item Direct Costs. The Construction Contingency is not allocated to any particular

Docusign Envelope ID: 8BAB3782-3942-4079-A0AA-BE0EB9A8D601

item of the Project but may be used for any portion of the work as determined above. Any amount not used in the Construction Contingency will belong to City and will reduce the GMP.

15.4.2 Owner's Contingency. This GMP also includes a dollar amount listed as an Owner's Contingency which may be used only by the City (owner department) for upgrades and changes in scope or other changes not already included within the intent of the Project Program. City will provide CM@Risk with a Work Change Directive authorizing CM@Risk to perform the additional work and to transfer funds from the Owner's Contingency to the Work Item Direct Costs category to be paid with such direct costs. These additional costs will be in an amount mutually agreed upon by CM@Risk and City or will be documented by CM@Risk on a time and materials basis and are subject to verification by City. Any amount not used in the Owner's Contingency will belong to the City and will reduce the GMP.

15.5 **REDUCTION IN RETENTION**

If the Agreement Price is based upon a GMP, in order to receive payment of one-half of the retention as set forth in Section 8.1.5 above, Contractor must also submit to the Project Manager a complete accounting of the Actual Reimbursable Cost of the Work to date, including all such documentation (including, without limitation, invoices, subcontract, subcontractor change orders, purchase orders, records of payment, etc.) as City may require, to establish whether the payments made to Contractor equal, exceed, or are less than the actual reimbursable Cost of the Work to date. Any excess payments by City, as determined by the Project Manager, will be deducted from the one-half retention payment to be made to Contractor, and any additional excess amounts paid to Contractor will be refunded by Contractor to City. The Project Manager's determinations as to Actual Reimbursable Cost of the Work will be the basis of payment until final Project Closeout and Final Payment under the Agreement.

15.6 **FINAL PAYMENT**

If the Agreement Price is based upon a GMP, as a further condition precedent to Final Payment by City, Contractor must submit to the Project Manager a complete final accounting of the Actual Reimbursable Cost of the Work, including all such documentation (including, without limitation, invoices, subcontracts, subcontractor change orders, purchase orders, records of payment, etc.) as City may require, to establish whether the payments made to Contractor equal, exceed, or are less than the Actual Reimbursable Cost of the Work to date. Any excess payments by City, as determined by the Project Manager, will be deducted from the one-half retention payment to be made to Contractor, and any additional excess amounts paid to Contractor will be refunded by Contractor to City. Disputes relating to the Final Cost of the Work will be subject to City's audit rights under Sections 8.8 above and 15.7 below, and the dispute resolution process under Section 13 above.

15.7 **OPEN BOOK**

On any GMP-based or Cost-Based Agreement, Job Order, or Change Order, City may attend any and all meetings or discussions pertaining to the Project, including bid openings, and must have access to all books, invoices, accounts, memoranda, correspondence, and written communications or records of any kind pertaining to the Project, including without limitation, those stored in electronic format.

15.8 **DIFFERING SITE CONDITIONS AND/OR CHANGE IN LAWS**

A Change Order for increased costs under Section 9.5 or 9.6 above will only be considered

Docusign Envelope ID: 8BAB3782-3942-4079-A0AA-BE0EB9A8D601

or granted by City to the extent such actual, documented costs are justified.

SECTION 16 - PROVISIONS APPLICABLE SOLELY TO JOB ORDER AGREEMENTS (JOC)

16.1 **ADDITIONAL DEFINITIONS**

The definitions set forth in Sections 2 and below will apply to all Job Order Agreements and Job Orders. In addition, the definitions set forth in Section 15.1 above will apply to all Cost-Based Job Orders.

Agreement –
Includes the Job Order Master Agreement and Job Order Project Agreements issued and agreed to by City and JOC Contractor.

JOC Contractor's Coefficient –
A numerical factor that represents JOC Contractor total costs (indirect and direct costs, sales tax, profit, etc.) and other adjustments for market conditions.

Job Order Request for Proposal (RFP) –
The Request for Proposals issued by City for each Job Order Project Agreement relating to a specific Project.

Job Order Cost Proposal –
The Proposal submitted by JOC Contractor in response to a Job Order Request for Proposal (RFP) issued by City to develop a Job Order Project Agreement for a specific Project.

Guaranteed Maximum Price (GMP) Job Order –
Job Order under which JOC Contractor is compensated for actual costs incurred.

Job Order Project Agreement (Job Order) –
The agreement for a specific project, as it may be modified by all Change Orders, executed by the Parties, which incorporates the terms and conditions of the Job Order Master Agreement.

16.2 **ORDERING AND PROCESSING PROCEDURES FOR JOB ORDERS**

16.2.1 The process for developing and issuing a Job Order for a particular Project consists of three (3) procedures: (1) issuance of a RFP by City; (2) JOC Contractor's response to the RFP in the form of JOC Contractor's Job Order Cost Proposal; and (3) Issuance of a Job Order by City, as set for below.

16.2.2 RFP's For Job Orders

16.2.2.1 City will provide to JOC Contractor RFP with a Scope of Work (SOW) describing the Work to be performed, which may include special instructions and conditions, material submittal requirements, and, if applicable, a complete set of sketches, construction drawings and specifications for the Job Order.

16.2.2.2 Some Job Order RFP's will be issued by City without detailed sketches, drawing and specifications and will rely on JOC Contractor to produce them for City review and approval and is considered to be Pre-Construction and incidental design services included in JOC Contractor's overhead for GMP Job Orders. In addition JOC Contractor will not be reimbursed for any Pre-Job Order costs, including proposal preparation, attendance during negotiations, or site visits.

Docusign Envelope ID: 8BAB3782-3942-4079-A0AA-BE0EB9A8D601

16.2.3 JOC Contractor's Job Order Cost Proposal

16.2.3.1 JOC Contractor must respond within ten (10) calendar days of the RFP date or site visit, whichever is later or as otherwise indicated on a case-by-case basis, by submitting JOC Contractor's Job Order Cost Proposal to the City representative.

16.2.3.2 Unless otherwise required under the terms of the RFP, JOC Contractor's Job Order Cost Proposal must include the following.

a. JOC Contractor's Job Order Cost Proposal in PDF and electronic format;

b. A Project Schedule and schedule of values that reflects the costs of each work element on the schedule. The schedule must show all milestones (e.g., permits, submittals, ordering materials, demolition, work phases, closeout and completion date); and

c. Necessary documentation will be required to indicate that adequate scoping, layout, setup and planning to accomplish the Work has been done. Examples of documentation that might reasonably be expected include sketches, drawings, calculations, catalog cuts and specifications produced to a level of detail and skill that could be expected of experienced, competent Project Managers with five or more periods experience in their respective trade.

16.2.3.3 JOC Contractor must select Subcontractors based on qualifications alone or on a combination of qualifications and price and must not select Subcontractors based on price alone. A qualifications and price selection may be a one-step selection based on a combination of qualifications and price or two-step selection. In a two-step selection, the first step must be based on qualifications alone and the second step may be based or a combination of qualifications and price or on price alone.

16.2.3.4 Upon request, JOC Contractor must provide City with copies of Subcontractor quotes and the basis for selection of each Subcontractor.

16.2.3.5 If City objects to a selected Subcontractor, City will make the objection and the reasons for the objection known to the JOC Contractor. JOC Contractor must then present an acceptable Subcontractor for the applicable discipline. City will not unreasonably object to or withhold approval of a Subcontractor.

16.2.3.6 For self-performed work, the City retains the right to have the JOC Contractor establish JOC Contractor's costs by bidding their costs against at least three (3) other interested trade Contractors. No self- performed work will be allowed to be performed on a lump sum basis.

16.2.4 Issuance of Job Order

16.2.4.1 City Representative will compare the JOC Contractor's Job Order Cost Proposal with the City's estimate, schedules and other requirements, and then, if the City Representative determines it is in the best interest of City, arrange a meeting with JOC Contractor, at which time the JOC Contractor's Job Order Cost Proposal will be discussed and negotiated.

16.2.4.2 If the City Representative determines that it is in the best interest of the City, City will then issue a Job Order to JOC Contractor for execution.

16.2.4.3 Specific Job Orders may vary, but unless agreed to by City in writing otherwise, the content

Docusign Envelope ID: 8BAB3782-3942-4079-A0AA-BE0EB9A8D601

of Job Orders under the Agreement will generally be as follow, all of which will be signed and/or initialed by JOC Contractor's designated representative:

a. The description of the Scope of the Work and Project Schedule (attached as Exhibit A to the Job Order);

b. The address or location of the Work;

c. The Agreement Price for Work (Construction) included in the Project (attached as Exhibit B to the Job Order);

d. The name of the JOC Contractor representative for the Project;

e. The Drawings and Specifications for the Project;

f. If any shop drawings, project date and/or samples are required for the Job Order, the date for delivery of each required item (included in the Project Schedule, Exhibit A to the Job order); and

g. Project Specific Provisions, if any, in Exhibit A to the Job Order, including, without limitation, whether any of the following are required: Pre-Construction Conference, weekly progress meetings, field office, storage enclosure, materials and equipment handling facility, submittals, shop drawings, product data, equipment list, samples, project manual, schedule of values, Construction progress schedule, narrative reports, progress report, progress charts, progress photographs, materials status report, Construction diagram, Construction status report, operation and maintenance data, operating maintenance instructions and parts list, and as-build drawings.

16.2.5 Job Order Intent. Each Job Order will be interpreted to include all items reasonably necessary to complete the Project under that Job Order as described in the scope of the Work in that Job Order. All Work must be performed in a professional manner and all materials used must be new and of the highest quality and of the type best adapted to their purpose, unless otherwise specified. The Notice to Proceed date, and the award date established therein, will be deemed an integral part of the Job Order the same as if set forth therein.

16.3 **INCIDENTAL DESIGN SERVICES**

16.3.1 This effort includes all "extensions of design" for systems that are typically specified in a performance oriented manner by consultants and designers. Examples include: fire sprinkler systems, fire alarm and sprinkler systems, DDC controls, control systems, prefabricated metal building and similar situations. These designs are normally provided under submittals as a shop drawing with engineering backup and as appropriate, seals of registered engineers specializing in the particular system.

16.3.2 Incidental design includes all documents, sketches, schematic diagrams, floor plan layouts, equipment schedules and other documents produced by the JOC Contractor to define the work required for projects that the City does not develop formal or abbreviated designs requiring a seal by a registered engineer. Incidental design does not include preparation of designs requiring an architect or engineer seal.

16.3.3 JOC Contractor represents, covenants, and agrees, and contractually assumes the obligation to furnish, all of the required Design Services through properly licensed and

Docusign Envelope ID: 8BAB3782-3942-4079-A0AA-BE0EB9A8D601

experienced Design Professionals in complete accordance with all of the duties imposed on a Design Professional under the Agreement Documents, Laws, Regulations, or Legal Requirements, and the common law.

16.3.4 All Design Documents (and all other Project-related documents, models, computer drawings and other electronic expression, photographs and other expressions CADD, and BIM files and images included) that JOC Contractor and/or JOC Contractor's Design Professional(s) prepare in connection with a Job Order and the copyrights therein (collectively, the "Instruments of Service") will be the property of City. JOC Contractor covenants and agrees to execute any additional document reasonably requested by City to confirm such assignment without any additional compensation.

16.4 **CONSTRUCTION SERVICES**

16.4.1 The following subsections of this Section 16.4 set forth requirements beyond those set forth in Section 4 above which apply to Construction Services performed under a Job Order.

16.4.2 JOC Contractor must perform the Work using only those firms, team members and individuals designated by JOC Contractor consistent with each Job Order or otherwise approved by City pursuant to the General Conditions. No other entities or individuals may be used without the prior written approval of the Project Manager.

16.4.3 Construction Phasing

16.4.3.1 City use of the facilities is anticipated while the Work is being performed. The Work must be planned and accomplished so that there will be a minimum of interference and inconvenience to occupants in the building and agencies in the vicinity and to other craftsmen who may have to do work in the affected facilities. Any blockage of building exits or driveways must be coordinated in advance.

16.4.3.2 If applicable, furniture, portable office equipment and wall appurtenances not rigidly fastened to the walls must be moved by JOC Contractor, protected from damage and replaced to the original position upon completion of the work. If the work required by the Job Order will not allow furniture and portable office equipment to be replaced to its original position, new locations will be designated by City. Incidental costs associated with moving one-piece furnishings up to approximately 150 pounds to perform such tasks as painting, carpet or tile replacement, etc., are considered a general cost of building renovation and must be included in the JOC Contractor's Coefficient. Costs for large scale or wholesale removal and replacement of large quantities of desks or modular workstations, copiers, multiple full file cabinets, etc. to another location or storage outside the work space, or disassembly and reassembly of modular furniture is not considered part of the JOC Contractor's Coefficient and will be priced separately.

16.4.3.3 The work must, so far as practicable, be done in definite sections or divisions and confined to limited areas which must be completed before work in other sections or divisions are begun.

16.4.4 Work Site Conflicts. In the event of a conflict between JOC Contractor and others in an occupied facility or where other Contractors are performing work on the same facility under other Agreements, City will decide to dispute and that decision will be final.

16.4.5 Ownership of Work Product. Work Product prepared or otherwise created in connection

Docusign Envelope ID: 8BAB3782-3942-4079-A0AA-BE0EB9A8D601

with the performance of this Agreement, including the Work, are to be and remain the property of City. For purposes of this provision, "Work Product" will include all designs, drawings, plans, specifications, ideas, renderings and other information or matter, in whatever form created (e.g., electronic or printed) and in all media now known or hereinafter created. All Work Product will be considered Work Made for Hire as defined in the United States Copyright Act 17 U.S.C. §101 (Copyright Act). If for any reason any such Work is found not to be a work for hire, JOC Contractor hereby transfers and assigns ownership of the copyright in such Work to City. The rights in this Section are exclusive to City in perpetuity.

16.5 **OPTIONAL LIQUIDATED DAMAGES**

16.5.1 Specific Job Orders. City will have the right to assess liquidated damages in relation to any specific JOC Project Agreement as set forth below.

16.5.2 Substantial Completion Liquidated Damages. JOC Contractor acknowledges and agrees that if JOC Contractor fails to obtain Substantial Completion of the Work within the Agreement Time, City will sustain extensive damages and serious loss as a result of such failure. The exact amount of such damages will be extremely difficult to ascertain. Therefore, City and JOC Contractor agree that if JOC Contractor fails to achieve Substantial Completion of the Work within the Agreement Time, City will be entitled to retain or recover from JOC Contractor, as liquidated damages and not as a penalty, the sum per calendar day as indicated in MAG § 108.9.

16.5.3 Final Acceptance Liquidated Damages. For the same reasons set forth in Section 16.5.2 above, City and JOC Contractor further agree that if JOC Contractor fails to achieve Final Acceptance of the Work within the Agreement Time, City will be entitled to retain or recover from JOC Contractor, as liquidated damages and not as a penalty, the sum per calendar day as indicated in MAG § 108.9 commencing from the actual date of Substantial Completion or Final Acceptance as required under any specific JOC Project Agreement.

16.5.4 MAG Liquidated Damages. Liquidated damages provisions in MAG § 108.9 may apply to any specific JOC Project Agreement.

16.5.5 City may deduct liquidated damages assessed pursuant to this Section 16.5 from any unpaid amounts then or thereafter due JOC Contractor under the Agreement or any specific JOC Project Agreement between JOC Contractor and City. Any liquidated damages not so deducted from any unpaid amounts due JOC Contractor must be payable to City at the demand of City, together with interest from the date of the demand at the highest lawful rate of interest payable to JOC Contractor.

16.6 **PERFORMANCE MEASUREMENT**

16.6.1 Performance Assessment. After the Final Acceptance of Work under each Job Order, City will complete a written evaluation of the performance of JOC Contractor on the Job Order.

16.6.2 Consideration in Assignment of Work. JOC Contractor's record of cost, schedule and quality performance and comparative assessments will be significant considerations in City's determination whether to award future Job Orders. JOC Contractor agrees that any determination by City not to not award future Job Orders or Option periods based on performance will be at the sole discretion of City.

Docusign Envelope ID: 8BAB3782-3942-4079-A0AA-BE0EB9A8D601

SECTION 17 - PROVISIONS APPLICABLE SOLELY TO PRE-CONSTRUCTION SERVICES FOR CONSTRUCTION MANAGER AT RISK

17.1 ADDITIONAL DEFINITIONS

The definitions set forth in Section 2 and 15.1 above will apply to all Pre-Construction Services Agreements.

17.2 GENERAL

17.2.1 CM@Risk must perform the Services required by, and in accordance with the Agreement Documents and as outlined in Exhibit A of the Agreement to the satisfaction of the Project Manager, exercising the degree of care, skill, diligence and judgment a professional construction manager experienced in the performance of such services for construction and/or facilities of similar scope, function, size, quality, complexity and detail to the Project in urban areas throughout the United States, would exercise at such time, under similar conditions. CM@Risk must, at all times, perform the required services consistent with sound and generally accepted engineering principles and construction management and construction contracting practices.

17.2.2 As a participating member of the Project Team, CM@Risk must provide to City and Design Professional a written evaluation of City's Project Program and budget, each in terms of the other, with recommendations as to the appropriateness of each. CM@Risk must prepare a Baseline Cost Model that validates City's budget. The Baseline Cost Model must include all assumptions and basis of estimates in enough detail so that the Project Team can compare future detail estimates to the Baseline Cost model for variances. City and Design Professional will provide all the reasonably required data that is available in order to reach agreement between the team members that the Baseline Cost Model is an accurate projection of the costs of the Project.

17.2.3 CM@Risk must attend Project Team meetings, which may include, but are not limited to, bi- weekly Project management meetings, Project workshops, special Project meetings, construction document rolling reviews, public meetings and partnering sessions. CM@Risk attendance at design or other meetings in which CM@Risk is provided the opportunity but does not actively participate and/or is not properly prepared is not acceptable. Repeated instances of non-participation and/or lack of preparedness will be grounds for termination of CM@Risk Agreement for default.

17.2.4 CM@Risk must provide Pre-Construction Services, described herein, in a timely manner and consistent with the intent of the most current Drawings and Specifications. CM@Risk must promptly notify City in writing whenever CM@Risk determines any Drawings or Specifications are inappropriate for the Project and/or cause changes in the scope of Work that deviates more than the allowed contingencies within the Baseline Cost Model or requires an adjustment in the Baseline Cost Model, Detailed Cost Estimate, Detailed Project Schedule, GMP Proposals and/or in the Agreement Time for the Work, to the extent such as established.

17.2.5 CM@Risk when requested by City, must attend, make presentations and participate as may be appropriate in public agency and or community meetings, relevant to the Project. CM@Risk must provide drawings, schedule diagrams, budget charges and other materials describing the Project when their use is required or appropriate in any such public agency meetings.

Docusign Envelope ID: 8BAB3782-3942-4079-A0AA-BE0EB9A8D601

17.2.6 Ownership of Work Product. All Work Product prepared or otherwise created in connection with the performance of this Agreement, including the Work, are to be and remain the property of City. For purposes of this provision, "Work Product" will include all designs, drawings, plans, specifications, ideas, renderings and other information or material, in whatever form created (e.g., electronic or printed) and in all media now know or hereinafter created. All Work Product will be considered Work Made for Hire as defined in the United States Copyright Act 17 U.S.C.
§101 (Copyright Act). If for any reason any such Work is found not to be a work for hire, Contractor hereby transfers and assigns ownership of the copyright in such Work to City. The rights in this Section are exclusive to City in perpetuity.

17.2.7 CM@Risk represents to City in completing Pre-Construction Services and providing the reports and analysis required thereunder, that Work can be properly and timely constructed within the GMP Proposal, if accepted. CM@Risk does not assume any design responsibilities unless specifically called for in the scope of work, but CM@Risk will be responsible for their errors, omissions or inconsistencies included in the Work.

17.3 **DETAILED PROJECT SCHEDULE**

17.3.1 The fundamental purpose of the Detailed Project Schedule is to identify, coordinate and record the tasks and activities to be performed by all of the Project Team members and then for the Project Team to utilize that Deliverable as a basis for managing and monitoring all member's compliance with the schedule requirements of the Project. Each Project Team member is responsible for its compliance with the Detailed Project Schedule requirements. CM@Risk must, however, develop and maintain the Detailed Project Schedule on behalf of and to be used by the Project Team based on input from the other Project Team members. The Baseline Project Schedule must be developed as part of the Baseline Cost Model. The Detailed Project Schedule must use the Critical Path method ("CPM") technique, unless required otherwise, in writing by City. CM@Risk must use scheduling software acceptable to City to develop the Detailed Project Schedule. The Detailed Project Schedule must be presented in graphical and tabular reports as agreed upon by the Project Team. If Project phasing as described below is required, the Detailed Project Schedule must indicate milestone dates for the phases once determined. As part of construction phase, City may require CM@Risk to prepare a "resource loaded" schedule for all work, including work performed by Subcontractors, detailing each of the project tasks and the required/anticipated number of personnel per day for each task. CM@Risk must also indicate on the schedule its ability to meet said required/anticipated personnel requirements.

17.3.2 CM@Risk must include and integrate in the Detailed Project Schedule the services and activities required of City, Design Professional and CM@Risk including all construction phase activities based on the input received from City and the Design Professional. The Detailed Project Schedule must define activities as determined by City to the extent required to show: (a) the coordination between preliminary design and various pre-construction documents, (b) any separate long-lead procurements, (c) any permitting issues, (d) any land, right-of-way, or easement acquisition, (e) bid packaging strategy and awards to Subcontractors and Suppliers, (f) major stages of construction, (g) start-up and commissioning, and (h) occupancy of the completed Work by City. The Detailed Project Schedule must include by example and not limitation, proposed activity sequences and durations for design, procurement, construction and testing activities, milestone dates for actions and decisions by the Project Team, preparation and processing of shop drawings

Docusign Envelope ID: 8BAB3782-3942-4079-A0AA-BE0EB9A8D601

and samples, delivery of materials or equipment requiring long-lead time procurement (if any), milestone dates for various construction phases, Total Float for all activities to the extent authorized by City, relationships between the activities, City's occupancy requirements showing portions of the Project having occupancy priority, and proposed dates for Final Acceptance.

17.3.3 A Baseline Project Schedule must be initiated with the project Baseline Cost Model and agreed to by the project team at the same time. CM@Risk must update and maintain a detailed Project Schedule throughout pre-construction such that it will not require major changes at the start of the construction phase to incorporate CM@Risk's plan for the performance of the construction phase Work. CM@Risk must provide updates and/or revisions to the Detailed Project Schedule for use by the Project Team, whenever required, but no less often than at the Project Team meetings. CM@Risk must include with such submittals a narrative describing its analysis of the progress achieved to-date vs. the Baseline Project Schedule, including any concerns regarding delays or potential delays, and any recommendations regarding mitigating actions.

17.3.4 If phased construction is deemed appropriate at the time of developing the Baseline Cost Model or during the development of the Detailed Project Schedule, and City approves, CM@Risk must review the design and make recommendations regarding the phased issuance of Construction Documents to facilitate phased construction of the Work, with the objective of reducing the Project Schedule and/or Cost of the Work. CM@Risk must take into consideration such factors as natural and practical lines of work severability, sequencing effectiveness, access and availability constraints, total time for completion, construction market conditions, labor and materials availability, and any other factors pertinent to saving time and cost.

17.3.5 Long Lead Time Items. As part of developing the Detailed Project Schedule, CM@Risk must identify all long lead time materials, fabrications, equipment, or other items which may impact the Project Schedule and may require early action on the part of the Project Team. Dates for selecting and ordering long lead time items will be included and highlighted in the Detailed Project Schedule

17.3.6 Equipment Plan. Contractor must develop an Equipment Plan that addresses all rental and owned equipment, regardless of whether such equipment will be provided by CM@Risk or subcontractor(s), that will be necessary to construct the Project and the cost of which will be included as a Cost of the Work in the GMP Proposal. The Equipment Plan will seek to minimize the cost of the equipment to City and maximize the efficient and coordinated use of the equipment for completion of the Project. The Equipment Plan will not only include the costs and allowable lease rates for the equipment, but will also include an equipment schedule that will be incorporated into the Detailed Project Schedule and the Schedule of Values submitted with the GMP Proposal.

17.4 DESIGN DOCUMENT REVIEWS

17.4.1 CM@Risk must evaluate periodically the availability of labor, materials/equipment, cost-sensitive aspects of the design; and other factors that may create an unacceptable variance to the Baseline Cost Model and/or Baseline Project Schedule.

17.4.2 CM@Risk must recommend, in conjunction with the Project Team, those additional surface and subsurface investigations that, in its professional opinion, are required to provide the necessary information for CM@Risk to construct the Project. These additional

Docusign Envelope ID: 8BAB3782-3942-4079-A0AA-BE0EB9A8D601

investigations, if agreed to be necessary by the Project Manager and the Design Professional, will be acquired by City and copies of the reports will be provided to CM@Risk.

17.4.3 CM@Risk must meet with the Project Team as required to review designs during their development. CM@Risk must familiarize itself with the evolving documents through pre- construction. CM@Risk must proactively advise the Project Team and make recommendations on factors related to construction costs, and concerns pertaining to the feasibility and practicality of any proposed means and methods, selected materials, equipment and building systems, and, labor and material availability. CM@Risk must furthermore advise the Project Team on proposed site improvements, excavation and foundation considerations, as well as, concerns that exist with respect to coordination of the Drawings and Specifications. CM@Risk must use established value analysis principles in recommending cost effective alternatives.

17.4.4 CM@Risk must routinely conduct constructability and bid-ability reviews of the Drawings and Specifications as necessary to satisfy the needs of the Project Team. The reviews must attempt to identify all discrepancies and inconsistencies in the Construction Documents especially those related to clarity, consistency, completeness and coordination of Work of Subcontractors and Suppliers.

17.4.4.1 CM@Risk must evaluate whether: (a) the Drawings and Specifications are configured to enable efficient construction; (b) design elements are standardized; (c) construction efficiency is properly considered in the Drawings and Specifications; (d) module/preassembly design is prepared to facilitate fabrication, transport and installation; (e) sequences of Work required by or inferable from the Drawings and Specifications are practicable; (f) the design has taken into consideration efficiency issues concerning access and entrance to the site, laydown and storage of materials, staging of site facilities, construction parking, and other similar pertinent issues; and (g) the design maintains continued operation of the existing City systems and maintains traffic on adjacent roadways. CM@Risk must also review the Drawings and Specifications to ensure that what is depicted therein can be constructed as designed and must promptly inform the Project Team of any issues.

17.4.4.2 CM@Risk must check cross-reference and complementary Drawings and sections within the Specifications and in general evaluate whether: (a) the Drawings and Specifications are sufficiently clear and detailed to minimize ambiguity and to reduce scope interpretation discrepancies; (b) named materials and equipment are commercially available and are performing well, or otherwise, in similar installations; (c) Specifications include alternatives in the event a requirement cannot be met in the field; and (d) in its professional opinion, the Project is likely to be subject to Differing Site Conditions.

17.4.4.3 The results of the reviews must be provided to Project Team in formal, written reports clearly identifying all reviewed documents and the discovered discrepancies and inconsistencies in the Drawings and Specifications with notations and recommendations made on the Drawings, Specifications and other documents. CM@Risk must meet with Project Team to discuss any findings and review reports.

17.4.4.4 CM@Risk's reviews must be from a Contractor's perspective, and though it will serve to eliminate/reduce the number of RFIs) and changes during the construction phase, responsibility for the Drawings and Specifications will remain with the Design Professional and not CM@Risk.

Docusign Envelope ID: 8BAB3782-3942-4079-A0AA-BE0EB9A8D601

17.4.5 It is CM@Risk's responsibility to assist the Design Professional in ascertaining that, in CM@Risk's professional opinion, the Construction Documents are in accordance with applicable Laws, Regulations, or Legal Requirements, building codes, sound engineering principle's rules and regulations. If CM@Risk recognizes that portions of the Construction Documents are at variance with applicable laws, statutes, ordinances, building codes, sound engineering principle's rules and regulations, it must promptly notify the Project Team in writing, describing the apparent variance of deficiency. However, the Design Professional is ultimately responsible for the compliance of the Drawings and Specifications with those laws, statutes, ordinances, building codes, rules and regulations.

17.4.6 The Project Team will routinely identify and evaluate using value analysis principles and alternate systems, approaches, design changes that have the potential to reduce Project costs while still delivering a high quality and fully functional Project consistent with the Project Program. If the Project Team agrees, CM@Risk in cooperation with the Design Professional, will perform a cost/benefit analysis of the alternatives and submit such in writing to the Project Team. City, through the Project Manager, will direct which alternatives will be incorporated into the Project. The Design Professional will have full design responsibility for the review and incorporation of CM@Risk suggested alternatives into the Drawings and Specifications. CM@Risk must analyze the costs and schedule impacts of the alternatives against the Baseline Cost Model and Schedule and provide a recommendation for the Project Team's consideration and City's approval prior to the establishment of the GMP.

17.5 **BASELINE COSTS MODEL, DETAILED COST ESTIMATES, AND SCHEDULE OF VALUES**

17.5.1 At the conclusion of the Master Planning and Programming, if required, CM@Risk will review all available information regarding the design and scope of the Project using CM@Risk's experience in performing similar work, knowledge of similar projects and current and projected construction costs and, based upon that review, must develop a Baseline Cost Model for review by the Project Team and approval by City. Once approved by City, the Baseline Cost Model will be continually referenced as detailed estimates are created as the design progresses throughout Pre-Construction until the final GMP for the entire Project is established. A final GMP for the entire Project must be established and approved by City prior to the start of construction. It is the responsibility of CM@Risk to ensure City has sufficient information to evaluate and approve a final GMP prior to the time necessary to start construction so construction can be completed within the Agreement Time. The Project Detailed Cost Estimate will be the best representation from CM@Risk of what the complete functional Project's construction costs will be as indicated by the most current available documents and will be constantly checked against the Baseline Cost Model. CM@Risk must communicate to the Project Team and assumptions made in preparing the Baseline Cost Model. The Baseline Cost Model must support CM@Risk's Detailed Cost Estimates and may be broken down initially as dictated by the available information, as required by City.

17.5.2 After receipt of the Design Professional's most current documents from certain specified pre- construction milestones, CM@Risk must provide a draft Detailed Cost Estimate including a detailed written report detailing any variances to the Baseline Cost Model and Baseline Project Schedule. The Design Professional and CM@Risk will reconcile any disagreements on the estimate to arrive at an agreed upon Detailed Cost Estimate for the construction costs based on the scope of the Project through that specified pre-construction milestone. Pre-Construction milestones applicable to this paragraph are:

Docusign Envelope ID: 8BAB3782-3942-4079-A0AA-BE0EB9A8D601

Master Planning and Programming, Schematic Design, 50% Design Development, 100% Design Development, and 50% Construction Drawings, If no consensus is reached, City will make the final determination. If the Project Team requires additional updates of the Detailed Cost Estimate beyond that specified in this paragraph, CM@Risk must provide the requested information in a timely manner.

17.5.3 If at any point the Detailed Cost Estimate submitted to City exceeds the previously accepted Baseline Cost Model or previously approved Detailed Cost Estimate agreed to as set forth in Section 17.5.2 above, CM@Risk must make appropriate recommendations to project Team on means/methods, materials, and or other design elements that it believes will reduce the estimated construction costs, such that it is equal to or less than the established Project Team's Baseline Cost Model.

17.5.4 Unless other levels of completion are agreed to in writing in the Construction Documents, at 50% Construction Drawings and included with the associated report, CM@Risk must also submit to the Project Team for review and approval a Schedule of Values that complies with the following requirements. The Schedule of Values must be based on City standard bid schedule and highlight significant variances from any previously submitted Schedule of Values. The Schedule of Values must be directly related to the breakdowns reflected in the Detailed Project Schedule and CM@Risk's Detailed Cost Estimate. In addition, the Schedule of Values must: (a) detail unit prices and quantity take-offs, (b) detail all other contingencies and unit price Work shown and specified in the detailed design documents.

17.5.5 CM@Risk is to track, estimate/price and address the Project Team's overall project cost issues that arise outside of the Baseline Cost Model and the latest approved Detailed Cost Estimate such as: City generated changes, Project Team proposed changes, alternate system analysis, constructability items and value engineering analysis. The system used to implement this process will be referred to as the Design Evolution Log. This is to be addressed between the Baseline Cost Model and the Master Planning and Programming Detailed Cost Estimate, and then (unless other levels of completion are agreed to in writing in the Construction Documents) between the Detailed Cost Estimates for each of the pre-construction milestones thereafter, Schematic Design, 50% Design Development, 100% Design Development, and 50% Construction Documents, and the bid packages for all Phases.

17.5.6 Upon request by City, CM@Risk must submit to City a cash flow projection for the Project based on the current updated/revised Detailed Project Schedule and the anticipated level of payments for CM@Risk during the design and construction phases. In addition, if requested by City and based on information provided by City, CM@Risk must prepare a cash flow projection for the entire Project based on historical records for similar types of projects to assist City in the financing process.

17.5.7 Construction Water. CM@Risk must estimate the quantity of water to be used and include the cost thereof in each Detailed Cost Estimate and GMP Proposal provided by City.

17.6 SUBCONTRACTOR AND MAJOR SUPPLIER SELECTIONS

17.6.1 There are two ways to select Subcontractors and major Suppliers prior to submission of a GMP Proposal: (1) qualifications-based selection; or (2) a combination of qualifications and price. Except as noted below, the selection of Subcontractors/Suppliers is the sole responsibility of CM@Risk. In any case, CM@Risk is solely responsible for the performance of the selected Subcontractors/Suppliers, and for compliance with the requirements of

Docusign Envelope ID: 8BAB3782-3942-4079-A0AA-BE0EB9A8D601

Title 34 of the Arizona Revised Statutes in the selection of a Subcontractors/Suppliers, to the extent applicable. CM@Risk must comply with its Subcontractor Selection Plan submitted with its Statement of Qualifications.

17.6.2 City may approve the selection of a Subcontractor(s) or Suppliers(s) based only on their qualifications when CM@Risk can demonstrate it is in the best interest of the Project. All Work that is performed, after such a qualifications-based selection, for a price that is negotiated by CM@Risk will be billed in accordance with the GMP for actual costs and may be subject to audit by City.

17.6.2.1 Qualifications based selection of a Subcontractor(s)/Supplier(s) should only occur prior to the submittal of the GMP Proposal.

17.6.2.2 If a Subcontractor/Supplier selection plan was submitted and agreed to by City, CM@Risk must apply the plan in the evaluation of the qualifications of a Subcontractor(s) or Supplier(s) and provide City with its review and recommendations.

17.6.2.3 CM@Risk must receive written City approval for each selected Subcontractor(s) and Supplier(s).

17.6.2.4 CM@Risk must negotiate costs for services/supplies from each Subcontractor/Supplier selected under this method.

17.6.3 All Work must be competitively bid unless a Subcontractor or Supplier was selected pursuant to Section 17.6.2 above.

17.6.3.1 CM@Risk must develop Subcontractor and Supplier interest, submit the names of a minimum of three qualified Subcontractors or Suppliers for each trade in the Project for approval by City and solicit bids for the various Work categories. If there are not three qualified Subcontractors/Suppliers available for a specific trade or there are extenuating circumstances warranting such, CM@Risk may request approval by City to submit less than three names. Without prior written notice to City, no change in the recommended Subcontractors/Supplies will be allowed.

17.6.3.2 If City objects to any nominated Subcontractor/Supplier or to any self-performed Work for good reason, CM@Risk must nominate a substitute Subcontractor/Supplier that is acceptable to City.

17.6.3.3 CM@Risk must distribute Drawings and Specifications, and when appropriate, conduct a Pre- Bid Conference with prospective Subcontractors and Suppliers.

17.6.3.4 If CM@Risk desires to self-perform certain portions of the Work, it must request to be one of the approved Subcontractor bidders for those specific bid packages. CM@Risk's bid will be evaluated in accordance with the process identified below. If events warrant and City concurs that it is necessary in order to ensure compliance with the Project Schedule and/or the most recent Detailed Cost Estimate, CM@Risk may be authorized to self-perform Work without bidding or rebidding the Work. When CM@Risk self-performs work without bidding, only the actual costs associated with performing the Work in accordance with the approved GMP will be billed and may be subject to audit by City.

17.6.3.5 CM@Risk must receive, open, record and evaluate the bids; provided, however, that if CM@Risk or one of its affiliates is bidding to self-perform the Work that is the subject of the bid, then the bids must be received, opened, recorded and evaluated by Project Manager

Docusign Envelope ID: 8BAB3782-3942-4079-A0AA-BE0EB9A8D601

instead of CM@Risk. Bids for each category of Work must be opened and recorded at a pre-determined time. The apparent low bidders must be interviewed to determine the responsiveness of their proposals. In evaluating the responsiveness of bid proposals CM@Risk, in addition to bid price, may consider the following factors: past performance on similar projects, qualifications and experience of personnel assigned, quality management plan, approach or understanding of the Work to be performed, and performance schedule to complete the Work. The final evaluation of Subcontractor/Supplier bids must be done with Project Manager in attendance to observe and witness the process. CM@Risk must resolve any Subcontractor/Supplier bid withdrawal, protest or disqualification in connection with the award at no increase in the Cost of Work.

17.6.4 CM@Risk will be required to prepare two different reports on the subcontracting process.

17.6.4.1 Within fifteen days after each major Subcontractor/Supplier bid opening process; CM@Risk must prepare a report for City's review and approval identifying the recommended Subcontractors/Supplier for each category of Work. The report must detail: (a) the name of the recommended Subcontractor/Supplier and the amount of the Subcontractor/Supplier bid for each sub-agreement; (b) the sum of all recommended Subcontractor/Supplier bids received; (c) and trade work and its cost that CM@Risk intends to self-perform, if any.

17.6.4.2 Upon completion of the Subcontractor/Supplier bidding process, CM@Risk must submit a summary report to City of the entire Subcontractor/Supplier selection process. The report must indicate, by bid process, all Subcontractors/Suppliers contacted to determine interest, the Subcontractors/Suppliers solicited, the bids received and costs negotiated, and the recommended Subcontractors/Suppliers for each category of Work.

17.6.5 The approved Subcontractors/Suppliers will provide a Schedule of Values with their bid proposals, which will be used to create the overall Project Schedule of Values.

17.6.6 If after receipt of sub-bids or after award to Subcontractors and Suppliers, City objects to any nominated Subcontractor/Supplier or to any self-performed Work without any reasonable basis, CM@Risk must nominate a substitute Subcontractor or Supplier, preferably if such option is still available, from those who submitted Subcontractor bids for the Work affected. Once such substitute Subcontractors and Suppliers are consented to by City, CM@Risk's proposed GMP for the Work or portion thereof must be correspondingly adjusted to reflect any higher or lower costs form any such substitution.

17.7 **GMP PROPOSAL**

17.7.1 When a GMP Proposal is submitted for a phase of the Work, the GMP will have a Detailed Cost Estimate of the Costs of the Work (as set forth in Section 15.2) in each phase of the Work that is being proposed plus the current estimate for all other Work. City will not approve the GMP for the phase of work without a total estimate for the complete Project. City may request a GMP Proposal for all or any portion of the Project and at any time during pre-construction. Any GMP Proposals submitted by CM@Risk must be based on and consistent with Baseline Cost Model and the current update/revised Detailed Cost Estimate at the time of the request and include any clarifications or assumptions upon which the GMP Proposal(s) are based.

17.7.2 A GMP Proposal for the entire Project will be the sum of the Cost of the Work, CM@Risk Fee, and General Conditions Cost. CM@Risk guarantees to complete the Project at or less than

Docusign Envelope ID: 8BAB3782-3942-4079-A0AA-BE0EB9A8D601

the final GMP Proposal amount plus approved Change Orders. CM@Risk will be responsible for any costs for expenses that would cause the Cost of the Work actually incurred, including the Construction Fee and General Conditions Costs, to exceed the GMP.

17.7.3 CM@Risk must prepare its GMP Proposal in accordance with City's request for GMP Proposal requirements based on the most current completed Drawings and Specifications at that time, which unless otherwise directed by City in writing, will be at 100% Construction Drawings. CM@Risk must mark the face of each document of each set upon which its GMP Proposal is based. These documents must be identified as the GMP Plans and Specifications. CM@Risk must send one set of those documents to the Project Manager, keep one set and return the third set to the Design Professional.

17.7.4 An updated/revised Detailed Project Schedule, Equipment Plan, and Schedule of Values must be included in any GMP Proposal(s), all of which must reflect the GMP Plans and Specifications the Detailed Project Schedule must be shown in relationship to the Project Schedule and identify any variance to the Baseline Project Schedule. Any such Detailed Project Schedule updates/revisions must continue to comply with the requirements of Section 17.3.1 through 17.3.5.

17.7.5 <u>GMP Proposals(s) Review and Approval</u>

17.7.5.1 CM@Risk must meet with the Project Team to review the GMP Proposal(s) and the written statement of its basis. In the event the Project Team discovers inconsistencies or inaccuracies in the information presented, CM@Risk must make adjustments as necessary to the GMP Proposal.

17.7.5.2 If during the review and negotiation of GMP Proposals design changes are required, City may authorize and cause the Design Professional to revise the GMP Plans and Specifications to the extent necessary to reflect the agreed-upon assumptions and clarifications contained in the final approved GMP Proposal. Such revised GMP Plans and Specification will be furnished to CM@Risk. CM@Risk must promptly notify the Project Team in writing if any such revised GMP Plans and Specifications are inconsistent with the agreed upon assumptions and clarifications.

17.7.6 All portions of or items comprising the GMP Proposal are subject to audit by City, as deemed appropriate by City, including, without limitation, any based upon unit prices or Work to be self- performed by CM@Risk, or its affiliates.

17.8 **<u>PAYMENT PROCEDURE FOR PRE-CONSTRUCTION SERVICES</u>**

17.8.1 Requests for monthly payments by CM@Risk for Pre-Construction Services must be submitted monthly and must be accompanied by a progress report, detailed invoices and receipts, if applicable. Any requests for payment must include, as a minimum, a narrative description of the tasks accomplished during the billing period, a listing of any Deliverables submitted, and copies of any Subconsultants' requests for payment, plus similar narrative and listings of Deliverables associated with their Work. Payment for services negotiated as a lump sum will be made in accordance with the percentage of work completed during the preceding month.

17.8.2 In no event will City pay more than seventy-five (75%) of the Agreement Price until acceptance of ALL Pre-Construction Services and award of the final approved Construction Services Agreement for the entire Project by City Council. If CM@Risk does not prepare a

Docusign Envelope ID: 8BAB3782-3942-4079-A0AA-BE0EB9A8D601

GMP Proposal that is acceptable to City, or the GMP Proposal exceeds the City's Construction Budget, then CM@Risk understands and acknowledges that it will forfeit any right to receive the 25% of the Agreement Price being retained by City.

17.8.3 CM@Risk agrees that no charges or claims for costs or damages of any type will be made by it for any delays or hindrances beyond the reasonable control of City during the progress of any portion of Pre-Construction Services specified in this Agreement. Such delays or hindrances, if any, will be solely compensated for by an extension of time for such reasonable period and may be mutually agreed between the parties. It is understood and agreed, however, that permitting CM@Risk to proceed to complete any such Services, in whole or in part after the date to which the time of completion may have been extended, will in no way act as a waiver on the part of City of any of their respective legal rights herein.

17.8.4 No compensation to CM@Risk will be allowed contrary to Article I, Chapter I, Title 34 of the Arizona Revised Statutes.

17.8.5 If any service(s) executed by CM@Risk is abandoned or suspended in whole or in part, for a period of more than 180 days through no fault of CM@Risk, CM@Risk is to be paid for the services performed prior to the abandonment or suspension.

17.9 **SURVIVAL OF THE DESIGN SERVICES AGREEMENT, DUTIES, OBLIGATIONS AND WARRANTIES**

If the GMP Proposal is accepted by City and a Construction Agreement is entered into between City and CM@Risk, the duties, obligations and warranties of CM@Risk under the Pre- Construction Services Agreement survive and are incorporated into the resulting Construction Agreement.

Docusign Envelope ID: 8BAB3782-3942-4079-A0AA-BE0EB9A8D601

SECTION 15 – APPENDICES

The following Appendices attached hereto are referenced in the General Conditions and are incorporated herein.

Appendix 1 – Policy Statement for Calculating Delays and Damages
Appendix 2 – Cost Reduction Incentive Proposals for Design Bid Build Agreements
Appendix 3 – Contractor's Affidavit Regarding Settlement of Claims
Appendix 4 – Forms of Performance Bond
Appendix 5 – Forms of Payment Bond
Appendix 6 – Dispute Resolution
Appendix 7 – Certificate of Completion
Appendix 8 – Construction Sign Detail
Appendix 9 – Cost of the Work (Applicable solely to Construction Manager at Risk and Job Order Contracting)
Appendix 10 Landscape Establishment Period

Docusign Envelope ID: 8BAB3782-3942-4079-A0AA-BE0EB9A8D601

CALCULATING DELAYS AND DAMAGES

The purpose of this policy statement is to establish guidelines and procedures for negotiation between the Contractor and City of Chandler relating to compensation for delays pursuant to Arizona Revised Statutes (A.R.S.) 34-221(F). This policy statement contains notice requirements in addition to those set forth in the Agreement Documents, and will be the Agreement Provision contemplated by that statute.

NOTE: As used herein, the term "Engineer" will refer to the City of Chandler City Engineer or his/her designated representative. Nothing in this Policy Statement will be construed to void any provision in the Agreement which requires timely notice of delays or provides for arbitration or any other procedure for settlement or provides for liquidated damages.

I. TYPES OF DELAYS:

For the purposes of this document, there are essentially four types of delays encountered by City of Chandler Construction Contractors; excusable/compensable, excusable/non-compensable, non- excusable, and concurrent. Only delays that extend Agreement Completion Time set forth in the Agreement Document will be considered for issues relating to Agreement extensions or additional compensation. All other delays are considered to be activity delays and do not entitle the Contractor to either time extensions or additional compensation. Agreement Completion Time will be defined as the date set forth in Maricopa Association of Governments (MAG) Uniform Standard Specification Section 101 and as may be modified by the Agreement Documents.

A. Excusable/Compensable:

These are delays caused solely by the City's actions or inactions, are unreasonable under the circumstances, and which were not within the contemplation of the parties to the Agreement at or prior to the time of execution of the Agreement. Since the Contractor presumably has no control over the events causing the delay, he may be entitled to both Agreement time extensions and additional compensation for delay damages. Further, he/she may be entitled to additional compensation from the impact of that delay on other work. Examples of excusable/compensable (E/C) delays include: failure to properly locate an underground City-owned utility within 2 feet of the actual location; failure to relocate City-owned utilities far enough in advance of construction in an area where the Contractor is scheduled to work that it delays start or completion of the Contractor's regularly scheduled work; failure to provide City-furnished equipment or materials in a timely manner if required by the Agreement; failure to acquire necessary Right-of-Way or Public Utility Easements prior to the Contractor beginning Work in the area; failure to timely return Shop Drawings or other Agreement Submittals in accordance with the Agreement; unreasonable delay by the City in making decisions which affect critical activities; surveying errors when the City is contractually responsible for providing Project Surveying. This list is not meant to be all inclusive, but is intended merely as examples of the type of City action or inaction which can result in a Contractor's claim for additional time and compensation.

Docusign Envelope ID: 8BAB3782-3942-4079-A0AA-BE0EB9A8D601

B. Excusable/Non-compensable:

These are delays over which neither the City nor the Contractor had control. Since both parties to the Agreement have been potentially damaged by the delay, but neither have caused it, only Time Extensions are warranted. Examples of excusable, non-compensable (E/N) delays include: unusually severe weather; fire; acts of God; failure of non-City owned utilities (SRP, CenturyLink, Cable TV, Southern Pacific Railroad, and Southwest Gas, etc.) to properly or timely locate accurately; failure of non-City owned utilities to relocate in advance of construction; the voluntary or involuntary filing for Bankruptcy protection by a Supplier or Subcontractor which causes the Supplier/Subcontractor to fail to meet a contractual deadline provided the Contractor can provide documentation that he/she executed the required Purchase Orders/Subcontract Agreements and received delivery schedules which, if met, would have eliminated the delay; delays as a result of an incomplete shutdown of a City or non-City owned utility main (the City does not guarantee a complete shutdown). This list also is not necessarily all inclusive but merely indicative of type and class of E/N delays.

C. Non-excusable/Non-compensable:

These are delays caused by the actions or inactions of Contractor or an officer, employee, agent, Subcontractor, Supplier or any other party for whom the Contractor is responsible. Since the Contractor has assumed responsibility for the risks associated with the events that caused the delay, he/she are not entitled to either time extensions or monetary delay damages. All non-excusable delays are also non-compensable. Examples of non- excusable, non-compensable (N/N) delays include: failure to perform by the Contractor, its Subcontractors and/or Suppliers (except as noted in section I.B above); failure to provide adequate labor, materials, and/or equipment on the Project; failure to perform contractually-required coordination with utilities, agencies and other Contractors; failure to notify the Engineer, in writing, of delay impacts within two working days, as required by MAG 104.2.3, or the next work day, as required by MAG 109.8.2; failure to timely submit Shop Drawings; failure to pothole or otherwise visually locate utilities sufficiently ahead of the Work to allow the Engineer to direct corrective action when necessary; delays due to retesting of previously failed work, re-inspection, and/or restaking resulting from faulty workmanship, poor quality control, or lack of compliance with Agreement Specifications. Again, this list is not necessarily all inclusive.

D. Concurrent:

When two or more delays occur simultaneously or overlap, each delay is analyzed separately to determine its impact on the overall project completion date based on when that delay started. Once again, only those delays which actually extend the Agreement completion time are considered as delays. The concurrent delay is considered an additional delay only to the extent it prolongs the delay to the Agreement Completion Time beyond the date that the one it is concurrent with had already delayed that date. For example, if two delays are concurrent, and one is five days long and the second is seven days long, the second concurrent delay will only extend the Agreement Completion Time by two days. The same method of analysis is

Docusign Envelope ID: 8BAB3782-3942-4079-A0AA-BE0EB9A8D601

used when there are multiple concurrent delays. Only those extending the Project Completion Date are considered to be delays for the purposes of this policy. The portion of each concurrent delay that delays the completion of the work is classified in the same manner as described previously for individual delays and being either E/C, E/N or N/N.

An example of a concurrent delay is where the City delays furnishing material, but the Contractor could not have installed it anyway due to unusually severe weather. The effect of the first delaying activity will extend for the full duration and will be considered controlling on the Contractor's schedule. A subsequent, concurrent delay will thereafter only be considered to effect the project completion (if at all) once the first delaying activity has ceased to impact the project completion. In this case, if the unusually severe weather continued and delayed the work after the material was delivered, the first portion of the delay would be classified E/C (delay for material) and the second as E/N (delay due to unusually severe weather). Using the procedure set forth above, the entire concurrent portion would be considered E/C as shown in the chart which follows.

Example of a Concurrent Delay:

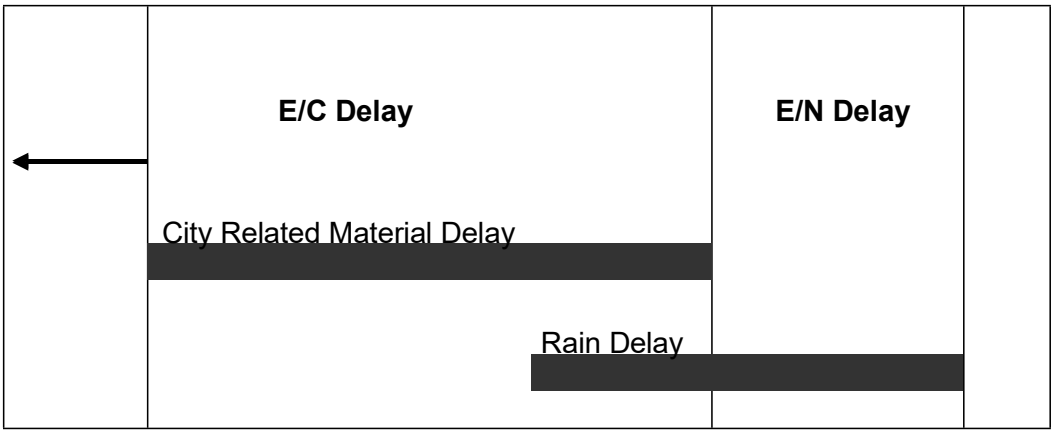

II. ANALYZING THE DELAY:

The Contractor must provide all documents required or requested by the Engineer to analyze the delay(s). It is important to understand that, prior to the delay analysis, delays and their impacts are alleged issues. The information the Contractor provides will be compared with the Inspector's Daily Log, Schedules and other available Project information and together they will support or refute that delays occurred and, if so, how they impact other work and the overall project completion. The Contractor's delay in providing these documents will be considered prima facie evidence that either the delay did not occur or it did not impact the Project Completion Date and any claim for time extension or damages will be denied.

The Engineer will accept delay analyses in CPM format, as these may demonstrate to his/her satisfaction whether or not Project Completion has been impacted by a specific event. If the Contractor chooses not to use CPM scheduling procedures, then the burden will be on the Contractor to prove to the Engineer's satisfaction that the Project Completion has been impacted. The procedures

Docusign Envelope ID: 8BAB3782-3942-4079-A0AA-BE0EB9A8D601

below assume that the Contractor is using CPM scheduling methods. As a minimum the Contractor must provide the following materials to the Engineer:

A. As-Planned Schedule. The initial construction schedule, required by the Agreement Documents, will be considered the baseline schedule. It is to the Contractor's advantage that the As-Planned (baseline) Schedule be as detailed as possible in order for delays, as they occur, to be incorporated into the schedule in representative locations. It is also to the Contractor's advantage to use a computer software program to generate the schedule since updated schedules are required monthly by the Agreement Documents and since updated schedules are required to support delays and requests for additional compensation for delays. The As-Planned (baseline) Schedule must be presented in network format which clearly shows the interrelationships of the activities. The Contractor must also provide a printout of the activities showing early start, early finish, late start, late finish, duration and float. The activity list printout must also indicate predecessor and successor activities.

B. As-Built Schedules. The as planned (baseline) schedule must be updated with complete progress-to-date information (actualized) up to the date of the start of the alleged delay. Each updated schedule will serve as the as-built schedule for analyzing the alleged delay and provide a new baseline as-planned schedule for the next delay. This process must be repeated for each alleged delay as it occurs. In updating the baseline schedule, the alleged delay must be treated as an activity and inserted into the schedule as a predecessor to the impacted activity (ies). When an activity that has already started is impacted, it is preferable to divide this activity into two parts and show the impact affecting the second part. For schedules which incorporate a time line (or data date), the delay activity must be inserted at the time it actually occurred. Some software scheduling programs have a PAUSE-RESUME feature that can be used to facilitate the requirements. The updated schedule must also be accompanied by a listing of activities as with the baseline schedule. This activities list must contain the alleged delay as an activity showing the duration and the activities which are predecessors and successors to it. When computer generated schedules are used, the Contractor must provide, in electronic media format, the complete data files for the updated schedule that included the delay activity, preferably either in Suretrak or in Microsoft Project. Each electronic media must contain a label identifying the Project name, Contractor's name, program name and version number, data date and project finish date.

C. Other Documents: In order to determine the amount of the alleged delay and if it is compensable, the Contractor must provide all backup documentation relevant to the issue and as required by the Engineer. This documentation must include copies of such items as: purchase orders; delivery schedules; correspondence; memoranda of telephone calls; force account daily worksheets (initialed by the Inspector); payroll data; estimating (bid) worksheets; and any other materials which may be requested by the Engineer.

D. Procedure: Only after receipt of sufficient documentation will the Engineer analyze each alleged delay and determine if it is supported or refuted. If supported, the Engineer will determine if it is excusable or non-excusable, compensable or non-

Docusign Envelope ID: 8BAB3782-3942-4079-A0AA-BE0EB9A8D601

compensable. If the Engineer determines that the delay did not affect the Project Completion, the as-planned schedule, which has been updated to the date of the alleged delay, must be revised to indicate this. If the Engineer determines the delay did occur but was N/N, then no time extension will be granted. It is imperative that an actualized schedule be submitted as soon as the occurrence of the alleged delay is known. In no event will the Contractor submit an actualized updated schedule later than 60 days after the occurrence of the alleged delay becomes known.

If the Engineer determines the delay did occur and was excusable but, due to a reason listed in section I.B. is non-compensable, he/she will determine the length of the E/N delay and prepare a Change Order to add that time to the Agreement. The Engineer's decision will be final.

If the Engineer determines the delay was excusable and compensable, he/she will determine the length of the E/C delay and proceed to review the Contractor's damage calculations in accordance with Section III. The Engineer will check the Contractor's calculations, review the backup documentation provided, and prepare a Change Order to cover both the additional compensation and the time extension. The Engineer's decision on both the time extension and additional compensation for the delay will be final.

If the issue involves a concurrent delay, the Engineer will analyze available data to determine the portions which are E/C, E/N, and/or N/N as described above. The Engineer will proceed to determine the length of E/C delay and verify the Contractor's delay damage calculations, if any are provided. Upon completion of this review, the Engineer will prepare a Change Order for the Contractor's review and signature. The Engineer's decision regarding excusable delay and additional compensation for the delay is final.

The amount of time the Engineer will require to analyze the alleged delay(s) will depend upon the Engineer's workload, the complexity of the delay analysis, availability of supporting data, extent of cooperation by the Contractor, and other factors beyond the Engineer's control. It is entirely possible other delay(s) may occur while the Engineer is analyzing particular claim for delay(s). The Engineer's failure to respond to the Contractor in a set period of time will not be used as the basis for a further delay claim or as justification for extending and existing delay claim. The time required for delay analysis by the Engineer will not be counted against the time allotted for processing Final Payment as required by (MAG Section 109.7(B)) or the release of retention and Final Payment as prescribed by A.R.S. Arizona Revised Statutes §34-221.

III. CALCULATING MONETARY DELAY DAMAGES:

Additional compensation for delay, when authorized by the Engineer, will be calculated in accordance with MAG Section 109.5 ACTUAL COST WORK with the following exceptions:

A. No additional compensation or other monetary damages will be awarded or paid for any loss of anticipated profits by the Contractor, Subcontractors or Suppliers.

Docusign Envelope ID: 8BAB3782-3942-4079-A0AA-BE0EB9A8D601

B. No additional compensation or other monetary damages will be awarded for home office overhead or non-project general conditions of the Contractor, Subcontractors or Suppliers.

C. Equipment:

1. Contractor-owned equipment rate calculations must be computed in accordance with Section 109.04(D)(3), Arizona Department of Transportation "Standard Specifications for Road and Bridge Construction," 2008 or latest edition and as modified herein. Year and regional adjustment factors must be based on the most recent publications of the Rental Rate Blue Book for Construction Equipment, published by the Equipment Guide-Book Company, San Jose, CA, same as provided by ADOT and in print as of the date of alleged delay. In no event will the compensation for Contractor-owned equipment exceed the purchase price, including tax, paid by the Contractor for the equipment. Compensation will not be allowed for small tools or equipment that show a daily equipment rental rate of less than $5.00 per day or for unlisted equipment that has a value of less than for hundred dollars ($400.00).
2. For leased and rented equipment or equipment not otherwise listed in the Blue Book, rental contracts, or other supporting data will be used to establish the hourly rate. No hourly operating expense will be allowed for delay on standby equipment. In no case will equipment be considered for rental which exceeds the hourly rate for the first eight hours and the daily rate divided by eight for all additional hours as compared with similar equipment listed in the Blue Book. The hourly standby rate must be computed as the lesser of:

    a. Dividing the monthly invoice or rental value by 176 hours per month when the equipment is utilized by the Contractor for more than three weeks;

    b. Dividing the monthly invoice or rental value by 40 hours per week when the equipment is utilized by the Contractor for more than three days.

    In no event will compensation be paid for delay at more than 8 hours per day or 40 hours per week.

3. Except for vehicles used by supervisory personnel, all equipment will be paid at the "standby" rate during the delay period.

4. Equipment brought solely to mitigate the delay (such as pumps, light plants, etc.) may be paid in accordance with ADOT section 109.04(D) (3).

5. The Blue Book regional adjustment will apply in determining rental rates.

D. Material:

Allowable material charges may include, in addition to material incorporated in the

Docusign Envelope ID: 8BAB3782-3942-4079-A0AA-BE0EB9A8D601

work material used to mitigate the delay such as barricades, plates, shoring, cold mix, etc. Except in emergencies the Contractor will not employ such material without the prior written approval of the Engineer.

E. Labor:

1. Except for Supervisory Personnel (Superintendent, Project Engineer, and Foremen), labor wages will not be paid after the first one-half day of claimed delay or impact. It is expected the Contractor will reassign or layoff unneeded employees.

2. For Foreman wages to be included, that Foreman must have been actively employed on the project prior to the commencement of the delay and be directly responsible for the activity being delayed.

3. Labor burden must be actual amounts incurred but must not exceed the ADOT approved rate.

F. All costs (equipment, material, and labor) must be substantiated by the City of Chandler's Daily Work Reports.

IV. DOCUMENT REQUIRED FOR CLAIM ANALYSIS:

For purposes of reviewing the Contractor's request for additional compensation, it will be required that the Contractor submit the following listed information. Information requested must be prepared on forms which are substantially similar to the City of Chandler's Daily Work Report form, a copy of which is attached as an exhibit.

A. Labor:

For each employee, laborer, and foreman, for which compensation is requested: Name, classification, dates of work performed, daily hours worked, total hours worked, labor rates, labor burden rates, overtime or premium time charges. Further, the Contractor must make available for inspection and copying to the Engineer the following listed documentation.

1. Certified payroll reports for the period of work claimed.
2. Accounting of Fringe Benefits – certified by a CPA.
3. Contractor's and Subcontractor's daily field reports and daily diaries.

B. Materials:

For all materials for which compensation is requested, if any, total quantities of materials, prices, extensions and transportation costs must be provided on a daily basis. Further, the Contractor must make available for inspection and copying to the Engineer the following listed documentation.

1. Invoices for all materials incorporated.
2. Weigh tickets.
3. Purchase orders.

Docusign Envelope ID: 8BAB3782-3942-4079-A0AA-BE0EB9A8D601

4. Delivery schedules.
5. Quotes or proposals from manufacturers or supplier.
6. Freight bills, Bills of Lading, or other documentation to show transportation costs.
7. Restocking charges-invoices from vendor.

C. Equipment:

For all equipment, the Contractor must provide the Engineer with the designation, dates and hours of usage, dates and hours of standby, if any, daily hours, total hours, rental rates and extension for each unit of equipment and machinery. Rental rates will be as established in Section III. Further, the Contractor must make available for inspection and copying to the Engineer the following listed documentation.

1. Owned:
   a. Purchase contracts(s).
   b. Depreciation schedule(s).
   c. Invoices for fuel, lube, repairs and other operating costs.

2. Leased:
   a. Lease agreement with hourly rate, overtime rate, double shift rate, etc.
   b. Invoices or other documentation showing hours worked on a daily basis.

D. Subcontractors/Owner-Operators:

In the event the Contractor submits a claim which includes requests for compensation for Subcontractors of Owner-Operators, the same information requested of the Contractor must be provided by the Subcontractor/Owner-Operator. Further, the Contractor must make available for inspection and copying to the Engineer the following listed documentation.

1. Bid/Estimate work sheets and/or spreadsheets.
2. Subcontract Agreements or Agreements with Owner-Operator.
3. All invoices and billing statements received from the Subcontractor/Owner-Operator which relates to the amount requested.

E. Miscellaneous:

Further, the Contractor must make available for inspection and copying to the Engineer the following listed documentation.

1. Evidence of payment for bonds and insurance premiums (MAG 109.5.6).
2. Taxes – unless the Contractor can show otherwise, taxes are reimbursable at 65% of the total cost (less bonds and insurance).

V. TIME LIMIT ON SUBMISSIONS OF CLAIM FOR DELAY OR IMPACT DAMAGES:

No claims for delay or impact damages will be considered or allowed more than 45 days after the event or occurrence which the Contractor claims gives rise to the delay or impact. In no event will a

Docusign Envelope ID: 8BAB3782-3942-4079-A0AA-BE0EB9A8D601

claim for delay or impact damages be considered after submission by the Contractor of the Final Payment Request.

Docusign Envelope ID: 8BAB3782-3942-4079-A0AA-BE0EB9A8D601

COST REDUCTION INCENTIVE PROPOSALS FOR DESIGN BID BUILD AGREEMENTS

The Contractor may submit to the Engineer proposals for modifying the Plans, Specifications, or other requirements of the Agreement for the sole purpose of reducing the total cost of Project construction. The proposals must not impair in any manner the essential functions or characteristics of the project; including but not limited to service life, economy of operations, ease of maintenance, desired appearance, compatibility with existing or planned equipment, standardization of systems, or design and safety standards.

It must not be inferred from this Policy that the Engineer is required to consider any proposal submitted.

Submissions that propose changes in the basic design of a bridge, propose changes in pipe line size, materials, bedding conditions, pipe specifications; or that propose any change in pavement design will not be considered.

Proposals submitted pursuant to this Policy will be identified as Cost Reduction Incentive Proposals. They must be submitted in writing and, at a minimum, contain the following.

1. Complete the attached or similar cost reduction incentive proposal form.

2. A description of both the existing Agreement Requirements for performing the work and the proposed changes.

3. All Engineering Drawings and computations necessary for the thorough and expeditious evaluation.

4. An itemization of the existing Agreement Requirements that must be changed if the Proposal is adopted and a recommendation as to the manner in which the change should be made.

5. A detailed estimate of the cost of performing the Work under the existing Agreement and under the proposed changes, including the cost of developing and implementing the changes.

6. The Agreement items affected by the proposed changes and any variations in quantities resulting from the changes.

7. An objective estimate of any effects the proposal will have on collateral cost to the City, costs of related items, and cost of maintenance and operation.

8. A statement as to the effect that the Proposal will have on the time for the completion of the Project.

9. A statement as to the time by which a Change Order adopting the Proposal must be executed or when the Engineer must have given verbal approval.

Docusign Envelope ID: 8BAB3782-3942-4079-A0AA-BE0EB9A8D601

Proposals will be processed expeditiously; however, the City will not be liable for any delay in acting upon any Proposal nor for any failure to accept any Proposal pursuant to this Special Provision.

The Engineer will be the sole judge of the acceptability of a Proposal and of the estimated net savings in construction costs from the adoption of all or any part of the Proposal. The Contractor will be notified in writing by the Engineer as to whether his/her Proposal has been accepted. The decision by the Engineer is final.

When the City deems such action to be appropriate, it reserves the right to require the Contractor to share equally in the cost to the City of investigating, evaluating, and processing the proposal as a condition for the consideration of such Proposal. Such cost must be shared whether the Proposal is accepted or rejected. When such a condition is imposed, the City will estimate these costs and the Contractor must indicate his acceptance thereof in writing. Such acceptance will authorize the City to deduct the Contractor's share of the costs from any monies due or that may become due to the Contractor under the Agreement.

If the Contractor's Proposal is accepted in whole or in part, the necessary Agreement Modifications and Agreement Price Adjustments will be affected by the execution of a Change Order which will specifically state that it is executed pursuant to this Special Provision.

The Contractor must continue to perform the work in accordance with the requirements of the Agreement until a Change Order incorporating the Proposal has been executed or until he/she has been given verbal approval by the Engineer that his/her Proposal has been accepted. If the Change Order has not been executed or he/she has not been given verbal approval on or before the date specified on the attached cost reduction incentive proposal form or on or before such other date as the Contractor may have subsequently specified in writing, the Proposal may be deemed to be rejected.

The executed Change Order will incorporate the changes in the Plans, Specifications, or other requirements of the Agreement which are necessary to permit the Proposal, or such part of it which has been accepted, to be put into effect, and will include any condition – upon which the City's approval thereof is based, if such approval is conditional. The executed Change Order may also extend the time for the completion of the Agreement if such an extension has been deemed to be warranted by the Engineer as a result of his evaluation of the Proposal.

The executed Change Order will also establish the estimated net savings in the cost of performing the Work attributable to the Proposal effectuated by the Change Order. In determining the net savings, the right is reserved to the Engineer to disregard the Agreement bid prices if, in his/her judgment, such prices do not represent a fair measure of the value of the Work to be performed or to be deleted. The net savings will be established by determining the Contractor's cost of performing the Work, taking into account his/her cost of developing the Proposal and implementing the change, and reducing this amount by any ascertainable collateral costs to the City. The executed Change Order may provide that the Contractor be paid 50 percent of the estimated net savings amount.

The executed Change Order may also provide for the adjustment in Agreement prices. Agreement prices may be adjusted by subtracting the City's share of the accrued net savings.

The amount specified to be paid to the Contractor in the executed Change Order which effectuates a Cost Reduction Proposal will constitute full compensation to the Contractor for the Cost Reduction

Docusign Envelope ID: 8BAB3782-3942-4079-A0AA-BE0EB9A8D601

Proposal and the performance of the work thereof pursuant to the said Change Order.

Upon acceptance of a Cost Reduction Incentive Proposal, any restrictions imposed by the Contractor on its use or on disclosure of the information will become void, and the City thereafter will have the right to use all or any part of the Proposal without obligation or compensation of any kind to the Contractor.

Docusign Envelope ID: 8BAB3782-3942-4079-A0AA-BE0EB9A8D601

COST REDUCTION INCENTIVE PROPOSAL FORM

TO: CIP City Engineer

FROM:

PROJECT NAME: **Mesquite Groves Park**

CITY PROJECT NUMBER: **PR2401.251**

DATE:

Summary of Change (Brief description of proposed change including advantages and disadvantages):

ESTIMATED COST SUMMARY (Attached detailed estimate):

A.	Original Cost:	$
B.	Proposed Cost:	$ _____
C.	Construction Savings (A-B):	$ _____
D.	Gross Savings (Included OH %, Bond %)	$ _____
E.	Contractor Implementing	$_____
F.	City Implementing Cost:	$_____
	Reduction in Agreement Price (C+D-E-F) x 50%:	$ _____

Date by which a Change Order must be issued so as to obtain maximum cost reduction:

Docusign Envelope ID: 8BAB3782-3942-4079-A0AA-BE0EB9A8D601

CITY OF CHANDLER, ARIZONA
PUBLIC WORKS & UTILITIES DEPARTMENT

CONTRACTOR'S AFFIDAVIT REGARDING SETTLEMENT OF CLAIMS

_____, Arizona
Date _____

Project Name: Mesquite Groves Park
City Project No.: PR2401.251

To the City of Chandler, Arizona

Gentlemen:

This is to certify that all lawful claims for materials, rental of equipment and labor used in connection with the construction of the above project, whether by subcontractor or claimant in person, have been duly discharged.

The undersigned, for the total compensation of $_____, as set out in the final pay application, as full and complete payment under the terms of the Agreement, hereby waives and relinquishes any and all further claims or right of lien under, in connection with, or as a result of the above described project. The undersigned further agrees to indemnify and save harmless the City of Chandler against any and all liens, claims or liens, suits, actions, damages, charges and expenses whatsoever, which said City may suffer arising out of the failure of the undersigned to pay for all labor performances and materials furnished for the performance of said installation.

Signed and dated at _____, this _____ day of _____ 20_____.

_____
CONTRACTOR

By _____

STATE OF ARIZONA)
) SS
COUNTY OF MARICOPA)

The foregoing instrument was subscribed and sworn to before me this _____ day of _____ 20 _____.

_____
Notary Public

_____
My Commission Expires

Docusign Envelope ID: 8BAB3782-3942-4079-A0AA-BE0EB9A8D601

PERFORMANCE BOND

ARIZONA STATUTORY PERFORMANCE BOND
PURSUANT TO TITLES 28, 34, AND 41, ARIZONA REVISED STATUTES
(Penalty of this bond must be 100% of the Agreement amount)

KNOW ALL MEN BY THESE PRESENTS THAT:_____

(hereinafter "Principal"), and _____ (hereinafter "Surety"), a corporation organized and existing under the laws of the State of _____ with its principal office in the City of _____, holding a certificate of authority to transact surety business in Arizona issued by the Director of Insurance pursuant to Title 20, Chapter 2, Article 1, as Surety, are held and firmly bound unto _____(hereinafter "Obligee") in the amount of _____ (Dollars) ($_____), for the payment whereof, Principal and Surety bind themselves, and their heirs, administrators, executors, successors and assigns, jointly and severally, firmly by these presents.

WHEREAS, the Principal has entered into a certain written Agreement with the Obligee, dated

the _____ day of _____, 20___ for construction of **Mesquite Groves Park, PR2401.251** which Agreement is hereby referred to and made a part hereof as fully and to the same extent as if copies at length herein.

NOW, THEREFORE, THE CONDITION OF THIS OBLIGATION IS SUCH, that if the Principal faithfully performs and fulfills all the undertakings, covenants, terms, and conditions of the Agreement during the original term of the Agreement and any extension of the Agreement, with or without notice of the Surety, and during the life of any guaranty required under the Agreement, and also performs and fulfills all the undertakings, covenants, terms, conditions, and agreements of all duly authorized modifications of the Agreement that may hereafter be made, notice of which modifications to the Surety being hereby waived, the above obligation is void. Otherwise it remains in full force and effect.

PROVIDED, HOWEVER that this bond is executed pursuant to the provisions of Title 34, Chapter 2, Article 2, Arizona Revised Statutes, and all liabilities on this bond will be determined in accordance with the provisions of Title 34, Chapter 2, Article 2, Arizona Revised Statutes, to the same extent as if it were copied at length in this Agreement.

The prevailing party in a suit on this bond may recover as part of the judgment reasonable attorney fees that may be fixed by a judge of the court.

Witness our hands this _____ day of _____, 20__.

_____
PRINCIPAL SEAL

_____
AGENT OF RECORD

By _____

_____
SURETY SEAL

_____
AGENT ADDRESS

Docusign Envelope ID: 8BAB3782-3942-4079-A0AA-BE0EB9A8D601

PAYMENT BOND

ARIZONA STATUTORY PAYMENT BOND
PURSUANT TO TITLES 28, 34, AND 41, OF THE ARIZONA REVISED STATUTES
(Penalty of this Bond must be 100% of the Agreement amount)

KNOW ALL MEN BY THESE PRESENTS THAT:_____

(hereinafter "Principal"), as Principal, and _____(hereinafter "Surety"), a corporation organized and existing under the laws of the State of _____ with its principal office in the City of _____, holding a certificate of authority to transact surety business in Arizona issued by the Director of the Department of Insurance pursuant to Title 20, Chapter 2, Article 1, as Surety, are held and firmly bound unto _____ (hereinafter "Obligee") in the amount of _____ (Dollars) ($_____), for the payment whereof, the Principal and Surety bind themselves, and their heirs, administrators, executors, successors and assigns, jointly and severally, firmly by these presents.

WHEREAS, the Principal has entered into a certain written Agreement with the Obligee, dated the _____ day of _____, 20___ for construction of **Mesquite Groves Park, PR2401.251** which Agreement is hereby referred to and made a part hereof as fully and to the same extent as if copied at length herein.

NOW, THEREFORE, THE CONDITION OF THIS OBLIGATION IS SUCH, that if the Principal promptly pays all moneys due to all persons supplying labor or materials to the Principal or the Principal's subcontractors in the prosecution of the work provided for in said Agreement, this obligation is void. Otherwise it remains in full force and effect.

PROVIDED, HOWEVER that this bond is executed pursuant to the provisions of Title 34, Chapter 2, Article 2 Arizona Revised Statutes, and all liabilities on this bond will be determined in accordance with the provisions, conditions and limitations of Title 34, Chapter 2, Article 2, Arizona Revised Statutes, to the same extent as if it were copied at length in this Agreement.

The prevailing party in a suit on this bond may recover as part of the judgment reasonable attorney fees that may be fixed by a judge of the court.

Witness our hands this _____ day of _____, 20__.

_____
PRINCIPAL SEAL

_____
AGENT OF RECORD

By _____

_____
SURETY SEAL

_____
AGENT ADDRESS

Docusign Envelope ID: 8BAB3782-3942-4079-A0AA-BE0EB9A8D601

DISPUTE RESOLUTION

A. INFORMAL DISPUTE RESOLUTION

The parties to the Agreement agree that time is of the essence in relation to performance of the Agreement and completion of the Project, therefore any and all disputes in relation to the Agreement will initially be referred to the Project Manager, the Design Professional Representative and/or the Contractor Representative as applicable to the dispute, for immediate resolution. If, after good faith efforts to reach a resolution, none is reached, any party to the dispute may submit the dispute to the Dispute Resolution Representative ("DRR") process set forth below, which is intended to be an expedited process.

B. DISPUTE RESOLUTION REPRESENTATIVE ("DRR") PROCESS

1. The Parties under the Agreement agree that all claims and disputes in relation to the Project which are not resolved in the ordinary course of the Project ("Claim" or "Claims") will, as a prerequisite to any mediation, or litigation of the Claim, first be submitted for resolution between the designated Dispute Resolution Representatives of the Parties as set forth herein (the "DRR Process").

2. The DRR Process will be initiated through service of a DRR Notice as set forth below:

   a. For claims by the Contractor or the Design Professional, the DRR Process will be initiated by the party asserting the claim serving written notice on the City setting forth in detail: (i) the basis for the claim; (ii) the effect of the Claim upon the construction of, and/or Project Schedule for, the Project;
   (iii) the specific relief requested, the amount thereof, and how such was calculated; (iv) the parties involved in the Claim, and how they are involved; (v) the specific Agreement provisions in the Agreement Documents (including, if applicable, drawings and specifications) which apply; and (vi) efforts made to date to resolve the Claim.

   b. For claims by the City, the DRR process will be initiated by the City providing written notice to the other parties of the basis and amount of its claim, the parties involved in the Claim, and how they are involved, the provisions in the Agreement Documents that apply, and the relief requested.

   c. The DRR Notice will be hand-delivered and e-mailed to the other parties' designated Dispute Resolution Representatives.

3. The other parties will respond in writing to the DRR Notice ("DRR Response") within ten (10) calendar days of receipt of the DRR Notice, setting forth those items set forth in the DRR Notice that they agree with, dispute, and/or have questions concerning. The DRR Response will be hand-delivered and e-mailed to the other parties' Dispute Resolution Representatives.

Docusign Envelope ID: 8BAB3782-3942-4079-A0AA-BE0EB9A8D601

4. The designated Dispute Resolution Representatives for the Parties to the claim will then meet as soon as possible and in any event within twenty (20) calendar days of submission of the DRR Notice (regardless of whether a DRR Response has been submitted by all parties involved in the dispute), at a mutually agreed upon time and place, to attempt to resolve the Claim based upon the DRR Notice and DRR Response.

5. At any time after the first meeting required above, either party may terminate the DRR Process by written notice to the other party.

6. The parties may agree, in writing, to extend or modify the time limits or other provisions of the DRR process in relation to a specific pending Claim.

7. Unless otherwise designated in a written notice to the other parties, the City and the representatives of the Contractor and of the Design Professional will act as the parties' designated Dispute Resolution Representatives.

8. If a resolution of the Claim is reached, that resolution must be set forth in writing and must be signed by the Parties' designated Dispute Resolution Representative. If the resolution involves a change in any Agreement Documents, the Agreement Price, the Project Schedule, or any other change requiring a written Change Order or Amendment, the parties must execute an appropriate written Change Order or Amendment pursuant to the terms of the Agreement Documents.

C. MEDIATION

1. Unless extended by written agreement of the parties involved in the dispute, any Claim not resolved through the DRR process set forth above within five (5) calendar days after the meeting required under B (4) above, or after the DRR is terminated pursuant to B (5) above, whichever is earlier, will be submitted to mediation as a condition precedent to litigation by either party.

2. The mediation will be commenced by written demand upon the other party for mediation. If the parties cannot agree upon a mediator within ten (10) calendar days of the written demand, either party may make a request to the Civil Presiding Judge of the Maricopa County Superior Court to appoint a mediator. The mediation will occur within forth (40) calendar days of the written demand for mediation, unless the parties agree, in writing, to a longer period of time.

3. The qualifications for the mediator will be that he/she be: (a) an experienced mediator, arbitrator or litigator of construction disputes; and (b) having engaged a significant portion of his/her time involving and/or resolving construction disputes for at least the past five (5) years.

4. Each party will provide to the other party and the mediator all of the information and documentation required under B(1) and (2) above, together with any additional information and documentation which the party believes relevant. In addition, the parties will exchange, and provide to the mediator such additional memoranda, information and/or documentation, as the

Docusign Envelope ID: 8BAB3782-3942-4079-A0AA-BE0EB9A8D601

mediator may request, and in the form and at such times, as the mediator may direct.

5. The parties will share the mediator's fee and any filing fees equally. The mediation will be held in Chandler, Arizona, unless another location is mutually agreed upon. Agreements reached in mediation will be specifically enforceable in any court having jurisdiction thereof.

D. LITIGATION

Any claim arising out of or related to the Agreement, except Claims relating to aesthetic effect and except those claims waived as provided for in the Agreement Documents, must be resolved through litigation in the Maricopa County, Arizona Superior Court.

Docusign Envelope ID: 8BAB3782-3942-4079-A0AA-BE0EB9A8D601

Chandler · Arizona

CITY OF CHANDLER, ARIZONA
PUBLIC WORKS & UTILITIES DEPARTMENT

CERTIFICATE OF COMPLETION

PROJECT NAME:	**Mesquite Groves Park**		
CITY PROJECT NO.:	**PR2401.251**		
If Federally Funded:			
FEDERAL NO.:		**ADOT NO:**	

(*This section to be completed by Prime*)
I HEREBY CERTIFY THAT ALL GOODS AND/OR SERVICES REQUIRED BY CITY OF CHANDLER FOR THIS PROJECT HAVE BEEN DELIVERED IN ACCORDANCE WITH THE AGREEMENT DOCUMENTS AND BID SPECIFICATIONS AND ALL ACTIVITIES REQUIRED BY THE AGREEMENTOR UNDER THE AGREEMENT HAVE BEEN COMPLETED AS OF THE COMPLETION DATE LISTED HERE:

FINAL ACCEPTANCE DATE:	

PRIME CONTRACTOR:

FIRM NAME:			
PRINCIPAL:			
TITLE:			
SIGNATURE:		DATE:	

CERTIFIED BY [*INSERT NAME AND TITLE OF PARTY THAT OVERSEES CONSTRUCTION*]:

FIRM NAME:			
SIGNATURE:		DATE:	

PROJECT ACCEPTED BY CITY OF CHANDLER:

NAME:			
SIGNATURE:		DATE:	

Docusign Envelope ID: 8BAB3782-3942-4079-A0AA-BE0EB9A8D601

CONSTRUCTION SIGN DETAIL

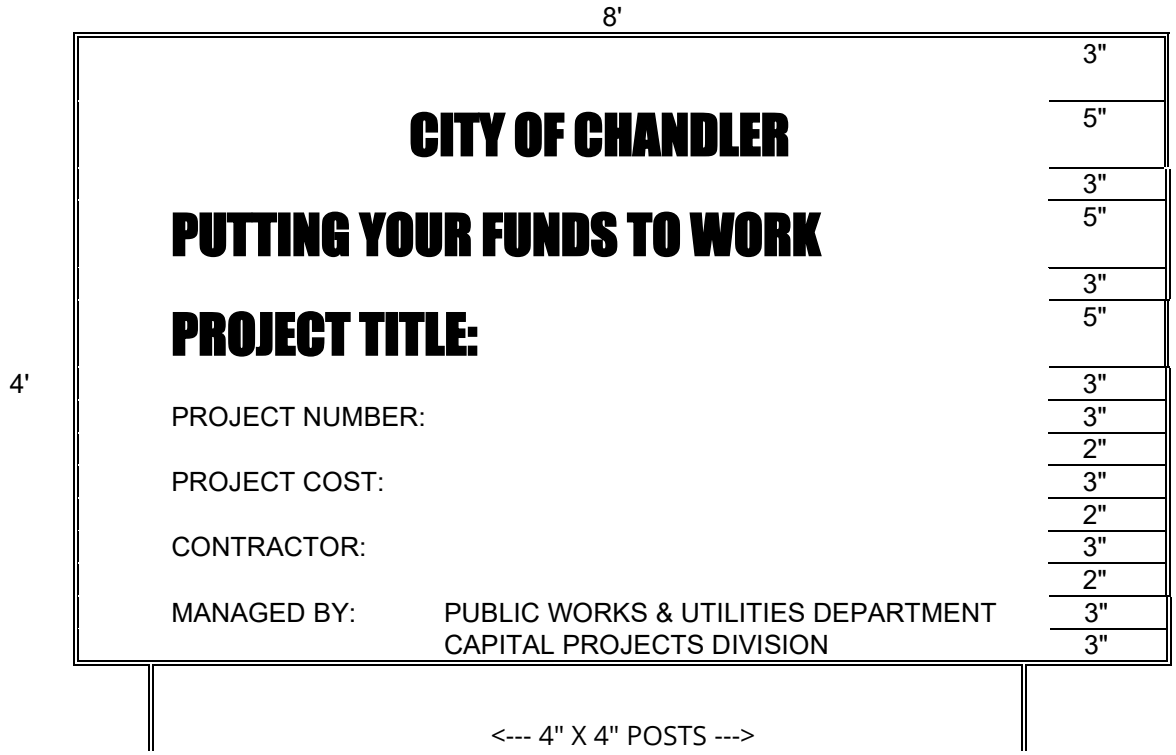

NOTES:

SIGN(S) MUST BE FURNISHED AND ERECTED PRIOR TO COMMENCEMENT OF CONSTRUCTION. POSTS MUST BE ANCHORED A MINIMUM OF TWO FEET INTO THE GROUND. BOTTOM OF SIGN MUST BE A MINIMUM OF FOUR FEET ABOVE THE GROUND.

TYPICAL PROJECT IDENTIFICATION SIGN FOR GENERAL PROJECTS MUST BE NON-REFLECTORIZED GREEN BACKGROUND, AND NON-REFLECTORIZED WHITE LETTERS AND NUMERALS.

ONE SIGN MUST BE ERECTED FOR BUILDINGS AND OTHER LIMITED AREA SINGLE SITES. FOR MULTIPLE SITES, ONE SIGN MUST BE ERECTED AT EACH SITE.

FOR LINEAR PROJECTS ONE HALF MILE OR LONGER, PLACE ONE SIGN AT EACH END OF THE PROJECT.

Docusign Envelope ID: 8BAB3782-3942-4079-A0AA-BE0EB9A8D601

COST OF THE WORK

(APPLICABLE SOLELY TO CONSTRUCTION MANAGER AT RISK AND JOB ORDER CONTRACTING)

SECTION 1 – COSTS TO BE REIMBURSED

1.1 Cost of the Work

The term Cost of the Work will mean costs necessarily incurred by Contractor in the proper performance of the Work. Such costs must be at rates not higher than the standard paid at the place of the Project except with prior consent of City. The Cost of the Work will include only the items set forth in this Section 1.

1.2 Labor Costs

1.2.1 Wages of construction workers directly employed by the Contractor to perform the construction of the Work at the site or, with City's approval, at off-site workshops. Cost to be reimbursed will be the actual wages paid to the individuals performing the work.

1.2.2 Wages or salaries of the Contractor's supervisory and administrative personnel when stationed at the site with City's approval. No Contractor personnel stationed at the Contractor's home or branch offices will be charged to the Cost of the Work. Non-field office based Contractor management and support personnel are expected to provide service and advice from time to time throughout the job and his/her time devoted to Project matters is considered to be covered by the Contractor's Fee.

1.2.3 Wages and salaries of Contractor's supervisory or administrative personnel who would normally be stationed at the field office in accordance with Section 1.2.2 but who become engaged, at factories, workshops or on the road, in expediting the production or transportation of materials or equipment required for the Work, but only for that portion of his/her time required for the Work. Employee bonuses and/or costs associated with Employee Stock Ownership Plans ("ESOP") will not be considered reimbursable labor or labor burden costs and will be considered non-reimbursable costs considered to be covered by the Contractor's Fee.

1.2.4 Costs paid or incurred by Contractor for taxes, insurance, contributions, assessments and benefits required by law or collective bargaining agreements and, for personnel not covered by such agreements, customary benefits such as sick leave, medical and health benefits, holiday, vacations and pensions, provided such costs are based on wages and salaries included in the Cost of the Work under Subparagraphs 1.2.1 through 1.2.3.

1.2.4.1 Cost of the Work will include the actual net cost to Contractor for worker's compensation insurance attributable to the wages chargeable to the Cost of Work per this Agreement. The actual net cost of worker's compensation must take into consideration all cost adjustments due to experience modifiers, premium discounts, policy dividends, retrospective rating plan premium adjustments, assigned risk pool rebates, any applicable weekly maximums, etc. Contractor may charge an estimated amount for worker's compensation insurance costs, but will make appropriate cost adjustments to actual costs within 45 days of receipt of actual cost adjustments from the insurance carrier.

Docusign Envelope ID: 8BAB3782-3942-4079-A0AA-BE0EB9A8D601

1.2.4.3 Overtime wages paid to salaried personnel (if approved in advance in writing by City) will be reimbursed at the actual rate of overtime pay paid to the individual. No time charges for overtime hours worked on the Project will be allowed if the individual is not paid for the overtime worked.

1.2.4.4 Any overtime premium or shift differential expense to be incurred by Contractor for hourly workers will require City's advance written approval before the incremental cost of the overtime premium or shift differential will be considered a reimbursable cost. If the Contractor is required to work overtime as a result of an inexcusable delay or other coordination problems caused by the Contractor or anyone he/she is responsible for, the overtime premium and/or shift differential expense portion of the payroll expense and related labor burden costs will be considered as cost not to be reimbursed.

1.2.4.5 Reimbursable labor burden costs will be limited to payroll taxes, worker's compensation insurance, the employer's portion of union benefit costs for union employees working on the Project, and the actual verifiable fringe benefit costs incurred by Contractor for non-union individuals working on the Project subject to the following maximum percentages for the following reimbursable non-union fringe benefit costs. The following maximums (as a percentage of reimbursable actual wages by individual) will apply for each of the following types of fringe benefit costs specifically attributable to each of the non-union personnel working on the Project:

- Medical Insurance, Dental, Life & AD&D Insurance: 12.00%
- Holiday, vacation and other paid time not worked: 10.00%
- Pension Plan Contributions to Vested Employee Account, Simplified Employee Pension Plans, or 401K matching plans (Note: ESOP related costs are covered by the Contractor Fee) 10.00%

For non-union personnel, no other fringe benefit costs (other than the three specific categories listed immediately above, will be considered reimbursable Cost of Work. Any labor burden costs that are in excess of the amounts considered reimbursable or are otherwise not considered reimbursable under the terms of this agreement are intended to be covered by the Contractor Fee.

1.3 Subcontract Costs

1.3.1 Payments made by Contractor to Subcontractors in accordance with the requirements of the subcontracts.

1.3.2 For Scope of Work Bid Packages typically performed by Subcontractors, Contractor may "self- perform" such work on an actual cost basis subject to an agreed upon Guaranteed Maximum Price for the "self-performed work". The Contractor must, unless agreed to by City in writing, bid his/her proposed guaranteed Maximum Price for the work to be "self-performed" against at least three other interested trade Contractors. All savings under any such Subcontract for "self-performed work" must be applied to reduce the Cost of Work under the Agreement and the Guaranteed Maximum Price. For purposes of defining "self-performed work" subject to this provision, any division of Contractor, or any separate Contractor or Subcontractor that is partially owned or wholly owned by the Contractor or any of his/her employees or employee's relatives will be considered a related party entity and will be subject to this provision regarding "self-performed work". No self-performed work will

Docusign Envelope ID: 8BAB3782-3942-4079-A0AA-BE0EB9A8D601

be allowed to be performed on a Fixed Price basis.

1.3.3 Contractor (with respect to its Suppliers, Subcontractors and all lower tier Subcontractors) must provide City advance written notice and must obtain City's approval for any proposed Subcontract Change Order, Material Purchase Order, or other financial commitment in an amount in excess of $5,000 prior to placing such order or entering into such agreement (regardless of whether or not any such commitment will affect the prime Agreement Guaranteed Maximum Cost). It is agreed that sums applicable to any Subcontract Change Order, Purchase Order or other financial commitment entered into in violation of the above notice and approval requirement will not be included in the amounts owning to Contractor, Subcontractors or Suppliers whether as Costs of the Work or as reasonable termination costs in the event of termination.

1.4 Costs of Material and Equipment Incorporated in the Completed Construction

1.4.1 Costs, including transportation and storage, of materials and equipment incorporated or to be incorporated in the completed construction.

1.4.2 Costs of materials described in the preceding Subparagraph 1.4.1 in excess of those actually installed to allow for reasonable waste and spoilage. Unused excess materials, in any, will become City's property at the completion of the Work or, at City's option, may be sold by the Contractor. Any amounts realized from such sales must be credited to City as a deduction from the Cost of Work.

1.4.3 Proceeds from the sale of recyclable materials, scrap, waste, etc. will be credited to job cost.

1.5 Costs of Other materials and Equipment, Temporary Facilities and Related Items

1.5.1 Costs, including transportation and storage, installation, maintenance, dismantling and removal of materials, supplies, temporary facilities, machinery, equipment and hand tools not customarily owned by construction workers, that are provided by the Contractor at the site and fully consumed in the performance of the Work; and cost (less salvage value) of such items if not fully consumed, whether sold to others or retained by Contractor. Cost for items previously used by Contractor will mean fair market value.

1.5.2 Rental charges for temporary facilities, machinery, equipment, and hand tools not customarily owned by construction workers that are provided by Contractor at the site, whether rented from Contractor or others, and costs of transportation, installation, minor repairs and replacements, dismantling and removal thereof. Rates and quantities of equipment rented will be subject to City's prior written approval.

1.5.2.1 The Projected usage for each piece of equipment to be rented for use on the Project and the estimated total rentals must be considered by Contractor before the piece of equipment is rented so that an appropriate rent versus buy decision can be made. Purchased equipment must be considered "job owned". At the completion of the Project, Contractor must transfer title and possession of all remaining job-owned equipment to City, or Contractor may keep any such equipment for an appropriate fair market value credit to job cost, which will be mutually agreed to by City and Contractor.

1.5.2.2 Each piece of equipment to be rented must have hourly, daily, weekly and monthly rates and

Docusign Envelope ID: 8BAB3782-3942-4079-A0AA-BE0EB9A8D601

the most economical rate available will be reimbursed based on the circumstances of actual need and usage of the piece of equipment while it is stationed at the jobsite. When the piece of equipment is no longer needed for the work, no rental charges will be reimbursed if the piece of equipment remains at the jobsite for the convenience of Contractor.

1.5.2.3 Equipment Rental Rates

1.5.2.3.1 Compensation for equipment used on the Project will be paid in accordance with the Equipment Plan submitted by Contractor in the accepted GMP Proposal and no payments will be made in excess of the rates set forth in the Equipment Plan, or actual documented costs, whichever is less.

1.5.2.3.2 All equipment rental rates and costs are subject to City's right to audit when submitted as part of Equipment Plan and/or at any time during the Project.

1.5.2.4 The aggregate rentals chargeable for each piece of Contractor owned tools or equipment must not exceed 50% of the fair market value of such equipment at the time of its commitment to the Work. The original purchase price and date of purchase of the equipment will be documented with a copy of the purchase invoice for the piece of equipment. Such aggregate limitations will apply and no further rentals will be charged even if a piece of equipment is taken off the job and is later replaced by a similar piece of equipment. For purposes of computing the aggregate rentals applicable to aggregate rental limitations, rental charges for similar pieces of equipment will be combined if the pieces of equipment were not used at the same time.

1.5.2.5 Fair market value for used material and equipment as referred to in the Agreement Documents will mean the estimated price a reasonable purchaser would pay to purchase the used material or equipment at the time it was initially needed for the job. Note: This is usually lower than the price a reasonable purchaser would pay for similar new construction material or construction equipment.

1.5.2.6 All losses resulting from lost, damaged or stolen tools and equipment will be the sole responsibility of Contractor, and not City, and the cost of such losses will not be reimbursable under the Agreement.

1.5.2.7 Contractor will be required to maintain a detailed equipment inventory of all job-owned equipment (either purchased and charged to job cost or job-owned through aggregate rentals) and such inventory must be submitted to City each month. For each piece of equipment, such inventory should contain at a minimum (1) original purchase price or acquisition cost (2) acquisition date (3) approved Fair Market Value at the time the piece of equipment was first used on the job and (4) final disposition.

1.5.2.8 All costs incurred for minor maintenance and repairs will be reimbursed at actual cost. Such costs include routine and preventative maintenance, minor repairs and other incidental costs. Repairs and/or replacement of a capital nature are considered to be covered by the rental rates. Major repairs and overhauls are not considered routine and ordinary; consequently such costs are not reimbursable and are intended to be covered by the rental rates.

1.5.3 Costs of removal of debris from the Site.

Docusign Envelope ID: 8BAB3782-3942-4079-A0AA-BE0EB9A8D601

1.5.4 Costs of document reproductions, facsimile transmissions and long-distance telephone calls, postage and parcel delivery charges, telephone service at the site and reasonable petty cash expenses of the site office.

1.5.5 That portion of the reasonable expenses of Contractor's personnel incurred while traveling in discharge of duties connected with the Work.

1.5.5.1 No travel expenses will be reimbursed to Contractor's representatives unless Project related travel required them to travel to a destination more than 100 miles from the Project location. Any travel involving airfare will require advance written approval by an authorized City's representative.

1.5.6 Costs of materials and equipment suitably stored off the site at a mutually acceptable location, if approved in advance by the City.

1.5.7 Reproduction costs will be the actual costs of reproduction subject to a maximum of five cents ($.05) per square foot for prints and a maximum of five cents ($.05) per 8 ½ by 11-inch page for offset print or photo copied agreement documents, specifications, etc. Telephone costs will be the actual costs paid to the third party telephone company for the field office telephone.

1.6 Miscellaneous Costs

1.6.1 That portion of insurance and bond premiums that can be directly attributed to the Agreement. The City will reimburse Contractor for contractually required bond at time of first pay application for GMP and Cost-Based Agreements upon receipt of proof of payment from the Contractor. If the Contractor completes Work for less than the Agreement Price, Contractor must credit the City a pro- rated amount for the unused portion of the bond payment

1.6.1.1 Contractor's actual cost for insurance will be considered to be included within the Maximum limit for General Conditions Costs. All premiums for any insurance and bonds required for the Project must reflect the net actual costs to Contractor after taking into consideration cost adjustments due to experience modifiers, premium discounts, policy dividends, retrospective rating plan premium adjustments, assigned risk pool rebates, refunds, etc.

1.6.1.2 The amount to be reimbursed to Contractor for all contractually required insurance will be actual costs not to exceed a total of 2% of the Agreement Value, unless Contractor establishes to City's satisfaction that the actual cost is higher and City agrees to such actual higher cost in writing. If Contractor's cost of contractually required insurance is greater than the amount agreed to be reimbursed per this Agreement Provision, the difference will be considered to be covered by the Contractor's Fee. The City will reimburse Contractor for contractually required insurance on a monthly basis for GMP and Cost-Based Agreements. If Contractor can demonstrate substantial savings by paying for all insurance in advance, the City may agree to reimburse all insurance costs at time of first pay application for GMP and Cost-Based Agreements with proof of payment from Contractor.

1.6.2 Sales, use or similar taxes imposed by a governmental authority that are related to the Work.

Docusign Envelope ID: 8BAB3782-3942-4079-A0AA-BE0EB9A8D601

1.6.3 Fees and assessments for the building permit and for other permits, licenses and inspections for which Contractor is required by the Agreement Documents to pay.

1.6.4 Fees of laboratories for tests required by the Agreement Documents, except those related to defective or nonconforming Work and which do not fall within the scope of ¶ 1.7.3 below.

1.6.5 Royalties and license fees paid for the use of a particular design, process or product required by the Agreement Documents; the cost of defending suites or claims for infringement of patent rights arising from such requirement of the Agreement Documents; and payments made in accordance with legal judgments against Contractor resulting from such suites or claims and payments of settlements made with City's consent. However, such costs of legal defenses, judgments and settlements must not be included in the calculation of the Contractor's Fee or subject to the Guaranteed Maximum Price.

1.6.6 Data processing costs related to the Work. However, any such data processing costs will be limited to the cost of personal computer hardware used at the field office in the normal day to day administration, management and control of the Project. The aggregate charges for any such hardware must not exceed the Fair Market Value of the hardware at the time it was brought to the field office. If the total charges for any particular piece of hardware reach an amount equal to the Fair Market Value, that particular piece of hardware must be turned over to City whenever it is no longer needed for the Project. If Contractor elects to keep the particular piece of hardware, the job costs must be credited with a mutually agreeable amount which will represent the Fair Market Value of the particular piece of hardware at the time it was no longer needed for the job. Software or other costs associated with the use of computer programs will not be considered to be a reimbursable cost and will be considered to be covered by the Contractor's Fee.

1.6.7 Deposits lost for causes other than Contractor's negligence or failure to fulfill a specific responsibility to City as set forth in the Agreement Documents.

1.6.8 Legal, mediation and arbitration costs, including attorneys' fees, other than those arising from disputes between City and Contractor, reasonably incurred by Contractor in the performance of the Work and with City's prior written approval; which approval will not be unreasonably withheld.

1.6.9 Expenses incurred in accordance with Contractor's standard personnel policy for relocation and temporary living allowances of personnel required for the Work, if pre-approved by City in writing. If City authorizes the reimbursement of relocation costs, the reimbursable relocation expenses will be limited to a maximum of $50,000 per person. Any relocation cost incurred by Contractor in excess of the amount reimbursed by City will be considered to be covered by the Contractor's Fee.

1.7 Other Costs and Emergencies

1.7.1 Other costs incurred in the performance of the Work if and to the extent approved in advance in writing by City.

1.7.2 Costs due to emergencies incurred in taking action to prevent threatened damage, injury or

Docusign Envelope ID: 8BAB3782-3942-4079-A0AA-BE0EB9A8D601

loss in case of an emergency affecting the safety of persons and property.

1.7.3 Costs of repairing or correcting damaged or nonconforming Work executed by Contractor, Subcontractors or Suppliers, provided that such damaged or nonconforming Work was not caused by negligence or failure to fulfill a specific responsibility of Contractor and only to the extent that the cost of repair or correction is not recoverable by Contractor from insurance, sureties, Subcontractors or Suppliers.

1.8 Related Party Transactions

1.8.1 The term "related party" will mean a parent, subsidiary, affiliate or other entity having common ownership or management with Contractor; any entity in which any stockholder in, or management employee of, Contractor owns any interest in excess of ten percent in the aggregate; or any person or entity which has the right to control the business or affairs of Contractor. The term "related party" includes any member of the immediate family of any person identified above.

1.8.2 If any of the costs to be reimbursed arise from a transaction between Contractor and a related party, Contractor must notify City in writing of the specific nature of the contemplated transaction, including the identity of the related party and the anticipated cost to be incurred, before any such transaction is consummated or cost incurred. If City, after such notification, authorizes in writing the proposed transaction, then the cost incurred will be included as a cost to be reimbursed, and Contractor must procure the Work, equipment, goods or service from the related party, as a Subcontractor. If City fails to authorize the transaction, Contractor must procure the Work, equipment, goods or service from some person or entity other than a related party.

SECTION 2 – COSTS NOT TO BE REIMBURSED

2.1 The Cost of Work must not include:

2.1.1 Salaries and other compensation of Contractor's personnel stationed at Contractor's principal office or offices other than the site office, except as specifically provided in Subparagraphs 1.2.2 and 1.2.3.

2.1.2 Expenses of Contractors' principal office and offices other than the site office.

2.1.3 Overhead and general expenses, except as may be expressly included in Section 1.

2.1.3.1 Costs of Contractor's home office computer services or other outside computer processing services will be considered overhead and general expense. Accordingly, Contractor should not plan to perform any such computer related services or alternatives at the field office when such services or functions can be performed at Contractor's home or branch offices, or other outside service locations.

2.1.4 Contractor's capital expenses, including interest on Contractor's capital employed for the Work.

2.1.5 Rental costs of machinery and equipment, except as specifically provided in subparagraph 1.5.2.

Docusign Envelope ID: 8BAB3782-3942-4079-A0AA-BE0EB9A8D601

2.1.6 Except as provided in Subparagraph 1.7.3 of the Agreement, costs due to the negligence or failure to fulfill a specific responsibility of Contractor, Subcontractors and Suppliers or anyone directly or indirectly employed by any of them or for whose acts of them may be liable.

2.1.7 Any cost not specifically and expressly described in Section 1.

2.1.8 Costs, other than costs included in Change Orders approved by City that would cause the GMP to be exceeded.

SECTION 3 – DISCOUNTS, REBATES, REFUNDS AND SAVINGS

3.1 Cash discounts obtained on payments made by Contractor will accrue to City if (1) before making the payment, Contractor included them in an Application for Payment and received payment therefore from City, or (2) City has deposited funds with Contractor with which to make payments; otherwise, cash discounts will accrue to Contractor. Trade discounts, rebates, refunds and amounts received from sales or surplus materials and equipment will accrue to City, and Contractor must make provisions so that they can be secured.

3.1.1 Cost of the Work will be credited with all insurance policy discounts, performance and payment bond rebates or refunds, refunds or return premiums from any Subcontractor default insurance, refunds or rebates from any Contractor controlled insurance programs applicable to the Project, merchandise rebates of any nature, refunds of any nature, insurance dividends; and a portion of any volume rebates or free material credits earned with purchase of material or other goods and services charged to the job.

3.1.2 "Cash" discounts which may accrue to Contractor will be limited to a maximum of 1.5% of invoice cost. Any portion of "Cash" discounts greater than 1.5% will automatically accrue to City if Contractor is eligible to take advantage of the discounts.

3.2 Amounts that accrue to City in accordance with the provisions of Paragraph 3.1 will be credited to City as a deduction from the Cost of the Work.

3.3 Any and all savings on the GMP, or any separately guaranteed items comprising the GMP, will belong to City, subject to any express right in the Agreement for Contractor to share in savings. Savings are subject to City's right to audit, and may be audited separately.

SECTION 4 – GENERAL CONDITIONS COSTS

4.1 General Conditions Costs may include, but are not limited to, the following types of costs incurred by Contractor during construction of the Work to the extent they are reimbursable Costs of the Work as delineated above: payroll costs for Work conducted at the site, payroll costs for the superintendent and full-time general foremen, payroll costs for management personnel resident and working on the site workers not included as direct labor costs engaged in support (e.g. loading/unloading, clean-up, etc.), administrative office personnel, costs of offices and temporary facilities including office materials, office supplies, office equipment, minor expenses, utilities, fuel, sanitary facilities and telephone services at the site, costs of liability insurance premiums not included in labor burdens for direct labor

Docusign Envelope ID: 8BAB3782-3942-4079-A0AA-BE0EB9A8D601

costs, costs of bond premiums, costs of consultants not in the direct employ of Contractor or Subcontractors, fees for permits and licenses.

4.2 General Conditions Costs may be paid on a percentage of the Agreement Price or on a lump/stipulate sum basis as set forth in the Agreement. All costs included in the General Conditions Costs will not be separately invoiced to or paid by City.

4.3 The total amount of General Conditions Costs for the Work may be divided by the number of days allowed for performance of the Work, to determine a fixed daily rate for General Conditions Costs that may be used in computing the General Conditions Costs allocated to any period of time, or for any adjustments in the General Conditions Costs agreed to in writing by City.

Docusign Envelope ID: 8BAB3782-3942-4079-A0AA-BE0EB9A8D601

LANDSCAPE ESTABLISHMENT PERIOD

Section 1 – Description and General

Contractor is in direct control of work performed under the Landscape Establishment Period. If work is subcontracted, a representative of the Contractor will be present at the site of the work for all hours that the subcontractor works. Subcontracting of Landscape Establishment work will be permitted for weed eradication with herbicides, because of special licensing. A licensed temporary service may be used to supply labor to Contractor if Contractor has received approval from City Representatives. Contractor will submit the required subcontract documentation.

Contractor must provide adequate personnel to accomplish the required maintenance of the plant materials at intervals acceptable to City Representatives.

If not healthy at the end of the maintenance period, the maintenance must be continued until the plant material is approved by City.

1.1 Time and Schedule

Unless otherwise expressly agreed to in writing by City, the Landscape Establishment Period will be per General Conditions Section 6.5.4.

1.2 Planted Stock and Seeding Establishment

1.2.1 Tree planting and staking must be per City of Chandler Standard Detail C-801.

1.2.2 All trees will stand erect on their own without stakes when brought to this site. If the tree cannot stand on its own when nursery stakes are removed, the tree will be removed and replaced.

1.3 Pre-Emergent Herbicide and Weed Control

1.3.1 Contractor will provide three applications of an approved pre-emergent herbicide on all unpaved areas of the project, as directed by City Representatives, to control weed growth in all areas of the project. The number of applications may be increased as directed by the City Representative, and at no additional cost to City, if the City Representative deems additional applications are required to control weed growth.

1.3.2 Application sequence will be approved in advance by City. The first application of pre-emergent will be completed prior to the application of Decomposed Granite and will be included with the cost of the Decomposed Granite as specified and part of the Construction Phase portion of work. The second application of pre-emergent will be completed after installation of the Decomposed Granit and no later than half-way through the Landscape Establishment Period. The third and final application of pre-emergent will be applied 15 days prior to completion of the Landscape Establishment portion of the project. The second and third pre-emergent applications will be included with the cost of Landscape Establishment. Watering will be completed in accordance with the manufacturer's recommendations, as included and as related to each application.

1.3.3 The pre-emergent herbicide will be applied in accordance with the Technical Specifications and the recommendations of the pre-emergent herbicide manufacturer, as approved by City Representatives.

Docusign Envelope ID: 8BAB3782-3942-4079-A0AA-BE0EB9A8D601

1.3.4 The control of weeds will be accomplished by the use of herbicides. Manual removal of weeds will be required, after herbicides have taken affect.

1.3.5 Contractor is responsible for the removal and disposal of all trash and debris that during the Landscape Establishment Period. Contractor will keep the project in a neat and orderly manner during the duration of the Landscape Establishment Period.

1.4 Water

The water used during Landscape Establishment to properly maintain the plant material will be furnished by City, at designated sources from within the project limits, at no charge to Contractor. Contractor will be responsible for all equipment, materials and labor necessary to load, transport and unload water for watering purposes.

1.5 Plant Material Replacements

The plant material replacement will be considered as included in the work for Landscape Establishment, and will be made at no charge to the City.

1.5.1 Shrub and Plant Replacement - During the second half of the Landscaping Establishment period, Contractor will provide, where required, plant replacements as follows:

Original Size	Replacement Size
1 gallon	5 gallon
5 gallon	15 gallon
15 gallon	24-inch box
36-inch box	48-inch box

1.5.2 Tree Replacement – During the second half of the Landscape Establishment Period, Contractor will provide plant material replacements for existing plants that die as follows:

Existing Plant Material Sizes	Replacement Size
Trees:	
2-inch Caliper	24-inch box
4-inch Caliper	36-inch box
6-inch Caliper and greater	54-inch box
Shrubs:	
All Existing Shrubs	15 gallon

1.6 Measurement and Payment

See Technical Specifications for Measurement Payment provisions.

Docusign Envelope ID: 8BAB3782-3942-4079-A0AA-BE0EB9A8D601

EXHIBIT F

SUBCONTRACTOR DOCUMENTS WITH CM@RISK

Any subcontractor assumptions, clarifications, exclusions, terms & conditions, signature blocks, etc. included are strictly between the CM@RISK and their subcontractors, and do not apply to the Agreement between the CM@RISK and the City.

N/A

City Council Memorandum Community Services Memo No. N/A

Date: September 15, 2025
To: Mayor and Council
Thru: John M. Pombier, Acting City Manager
Ryan Peters, Deputy City Manager
John Sefton, Community Services Director
From: Corey Povar, Assistant Director
Subject: Agreement No. CS2-595-4335, Amendment No. 4, with SiteOne Landscape Supply, LLC, for Rock, Granite, and Miscellaneous Supplies

---

Proposed Motion:

Move City Council approve Agreement No. CS2-595-4335, Amendment No. 4, with SiteOne Landscape Supply, LLC, for rock, granite, and miscellaneous supplies, in an amount not to exceed $845,000, for a one-year period, September 1, 2025, through August 31, 2026.

Background/Discussion:

The Community Services and Public Works and Utilities departments require ornamental rock, granite, topsoil, river rock, rip rap, in-field mix, and engineered wood fiber for a wide variety of applications. These materials are used throughout the city's park system to refresh rock areas, top dress fields, level ball fields, and fill in playground areas with engineered wood fiber. The Public Works and Utilities Department uses rock for basins, erosion repair, and regrading.

Evaluation:

On August 12, 2021, City Council approved an agreement with Pioneer Landscape Centers, Inc., for rock, granite, and miscellaneous supplies, for a one-year period, with the option of up to four additional one-year extensions. The contractor has agreed to extend for one additional year at the same terms and conditions, and with an overall price increase of 1% due to material cost increases. Staff recommends extension of this agreement for the term of September 1, 2025, through August 31, 2026. This is the fourth extension of the

original agreement.

Fiscal Impact

Account No.	Fund Name	Program Name	Dollar Amount	CIP Funded Y/N
401.4580.6515.6PR654	General Government Capital Projects	Aging Park Landscape Revitalization	$100,000	Y
625.3720.5420.0.0	Solid Waste Operating	N/A	$20,000	N
615.3960.5410.0.0	Wastewater Operating	N/A	$110,000	N
612.3960.5420.0.0	Reclaimed Water Operating Fund	N/A	$55,000	N
612.3980.5420.0.0	Reclaimed Water Operating Fund	N/A	$10,000	N
605.3860.5420.0.0	Water Operating	N/A	$50,000	N
605.3830.5420.0.0	Water Operating	N/A	$50,000	N
615.3900.5420.0.0	Wastewater Operating	N/A	$15,000	N
101.4530.5410.0.0	General Fund	N/A	$175,000	N
101.4530.5219.0.0	General Fund	N/A	$50,000	N
615.3970.5240.0.0	Wastewater Operating	N/A	$100,000	N
615.3940.5240.0.0	Wastewater Operating	N/A	$50,000	N
616.3930.5219.0.0	Wastewater Industrial Process	N/A	$60,000	N

Attachments

4335 Amendment Four

Docusign Envelope ID: 76BE126D-75AE-46C3-9488-DFAAC34AA0E6

City Clerk Document No. _____

City Council Meeting Date: _____

AMENDMENT TO CITY OF CHANDLER AGREEMENT
ROCK, GRANITE AND MISCELLANEOUS SUPPLIES
CITY OF CHANDLER AGREEMENT NO. CS2-595-4335

THIS AMENDMENT NO. 4 (Amendment No. 4) is made and entered into by and between the City of Chandler, an Arizona municipal corporation (City), and SiteOne Landscape Supply, LLC., (Contractor), (City and Contractor may individually be referred to as Party and collectively referred to as Parties) and made _____, 2025 (Effective Date).

RECITALS

WHEREAS, the Parties entered into an agreement for rock, granite and miscellaneous supplies (Agreement); and

WHEREAS, the term of the Agreement was September 1, 2021, through August 31, 2022, with the option of up to four one-year extensions; and

WHEREAS, the Parties wish to exercise the fourth option through this Amendment to extend the Agreement for one year.

AGREEMENT

NOW THEREFORE, the Parties agree as follows:

1. The recitals are accurate and are incorporated and made a part of the Agreement by this reference.

2. Section III is amended to read as follows: The Agreement is extended for a one-year period September 1, 2025, through August 31, 2026.

3. Section IV, Price is amended to read as follows: The City will pay the Contractor the per unit cost set forth in Revised Exhibit B of the original Agreement, attached to and made a part of this Amendment No. 4. Total payments made to the Contractor during the term of this Amendment No. 4 will not exceed $845,000.

Docusign Envelope ID: 76BE126D-75AE-46C3-9488-DFAAC34AA0E6

4. All other terms and conditions of the Agreement remain unchanged and in full force and effect. If a conflict or ambiguity arises between this Amendment No. 4 and the Agreement, the terms and conditions in this Amendment No. 4 prevail and control.

IN WITNESS WHEREOF, the Parties have entered into this Amendment on the Effective Date.

FOR THE CITY

By: _____

Its: _____Mayor_____

FOR THE CONTRACTOR

By: _____Monica DePriest_____

Its: _____Area Sales Manager_____

APPROVED AS TO FORM:

By: _____

City Attorney

JMB

ATTEST:

By: _____

City Clerk

Docusign Envelope ID: 76BE126D-75AE-46C3-9488-DFAAC34AA0E6

EXHIBIT B
REVISED PRICING

ITEM #	DESCRIPTION		EST. USAGE (tons)	UNIT PRICE
1a	Decomposed Granite, ¼" minus; Madison Gold or equal;	delivered	250	$40.50
1b		picked-up	250	$56.00
2a	Decomposed Granite, ¾" minus; Madison Gold or equal;	delivered	250	$47.00
2b		picked-up	250	NA
3a	Decomposed Granite, ¼" minus; Express Rose or equal;	delivered	250	$31.50
3b		picked-up	250	NA
4a	Decomposed Granite, ¾" minus; Express Rose or equal;	delivered	250	$41.00
4b		picked-up	250	NA
5a	¾" Screened Pioneer Gold (full load direct from quarry);	delivered	250	$56.25
5b		picked-up	250	$60.00
6a	4"-8" Pioneer Gold Rip Rap (full load direct from quarry);	delivered	250	$68.00
6b		picked-up	250	NA
7a	Decorative Rock; ¼" Madison Gold or equal;	delivered	250	$30.50
7b	Alternate: ¼"Washed Madison Gold	picked-up	250	$56.00
8a	Decorative Rock, ¾" Madison Gold or equal;	delivered	600	$49.75
8b	Alternate: ¾" Screened Madison Gold	picked-up	250	$65.00
9a	Decorative Rock, ½"; Express Rose or equal;	delivered	250	$48.00
9b	Alternate: ½" Screened Express Rose	picked-up	250	NA
10a	Decorative Rock, ¾"; Express Rose or equal;	delivered	250	$48.00
10b	Alternate: ¾" Screened Express Rose	picked-up	250	$64.00
11a	Decorative Rock, Sedona Red or equal;	delivered	250	NA
11b		picked-up	250	NA
12a	Decorative Rock, ¾", Pink Coral or equal;	delivered	250	$40.50
12b	¾" Screened Pink Coral	picked-up	250	$57.00
13a	Decorative Rock, ½" minus; Color:	delivered	250	NA
13b	Stagecoach brown	picked-up	250	NA
14a	Decorative Rock, ¾" minus; Color:	delivered	250	NA
14b	Stagecoach brown	picked-up	250	NA
15a	Decomposed Granite, ¼" minus or equal;	delivered	500	$40.50
15b	Stagecoach brown	picked-up	500	NA
16a	Decomposed Granite, ¾" minus or equal;	delivered	500	$39.00
16b	Alternate: Arizona Gold	picked-up	500	NA

Docusign Envelope ID: 76BE126D-75AE-46C3-9488-DFAAC34AA0E6

17a	Decomposed Granite; 1";	delivered	20	$57.25
17b	Stagecoach brown	picked up	20	$67.00
18a	Decomposed Granite; ¼" minus; Pioneer Gold	delivered	100	$38.25
18b		picked-up	100	NA
19a	Decomposed Granite; ¾" minus; Pioneer Gold	delivered	100	$45.75
19b		picked-up	100	NA
20a	Decomposed Granite, ¼" minus; Desert Gold,	delivered	100	NA
20b		picked up	100	NA
21a	Decomposed Granite, ¾" minus; Desert Gold	delivered	100	NA
21b		picked up	100	NA
22a	Decomposed Granite, ¼" minus; Arizona Gold	delivered	100	$28.75
22b		picked up	100	$43.00
23a	Decomposed Granite, ¾" minus; Arizona Gold	delivered	100	$39.00
23b		picked up	100	NA
24a	Decomposed Granite, ¾" minus, Autumn Gold	delivered	100	NA
24b		picked up	100	NA
25a	Decomposed Granite, ¾" minus; Cinnamon Brown	delivered	100	NA
25b		picked up	100	NA
26a	3"- 8" Salt River Rock (indigenous to metro Phoenix)	delivered	20	$50.00
26b		picked-up	20	$50.00
27a	Boulders; colors may vary	delivered	20	$250.00
27b		picked-up	20	$300.00
28a	Screened topsoil	delivered	100	$37.00
28b		picked-up	100	$37.00
29a	Sterilized manure	delivered	100 yards	$47.00
29b		picked-up	100 yards	$47.00
30a	Riprap granite for drains; 1 1'2" – 3"	delivered	100	$50.00
30b	Alternate: Arizona Gold 1" -3" Rip Rap	picked-up	100	$50.00
31a	Infield mix; Stabilizer "Pro Red"; infield mix	delivered	200	$157.50
31b	**(NO SUBSTITUTES)**	picked-up	200	NA
32a	Playground Engineered Wood Fiber chips per specs	delivered	1,000 cy	$45.00
32b	Playground Engineered Wood Fiber chips per specs	picked up	1,000 cy	$75.00
33a	washed mortar sand	delivered	200	$46.00
33b		picked-up	200	$46.00
34a	ABC crushed rock	delivered	100	$40.00
34b		Picked-up	100	$40.00

Docusign Envelope ID: 76BE126D-75AE-46C3-9488-DFAAC34AA0E6

Additional Delivery Charges for under truckload quantities (22-25 tons) based on a flat rate	
Delivery Charge for 1-5 ton load	$150
Delivery Charge for 6-12 ton load	$150
Delivery Charge for 13-22 ton load	$150

City Council Memorandum Cultural Development Memo No. CP26-023

Date: September 15, 2025
To: Mayor and Council
Thru: John Pombier, Acting City Manager
Leah Powell, Deputy City Manager
Kim Moyers, Cultural Development Director
Daniel Haskins, Capital Projects Division Manager

From: Hafiz Noor, Construction/Design Project Manager
Subject: Construction Agreement No. CA2202.501, Change Order No.1, with Arizona Public Service Company (APS), for Wall Street Overhead Power Conversion to Underground Design and Construction Services.

Proposed Motion:

Move City Council award Agreement No. CA2202.501, Change Order No.1, to Arizona Public Service Company (APS), in the amount of $330,433.71, for a revised agreement amount not to exceed $1,581,673.43. In addition, authorize an appropriation transfer of $228,467 from General Fund, Non-Departmental Contingency Account to the General Government Capital Fund, Cultural Development Capital Cost Center, Professional Services account, Wall Street Improvements Program.

Background/Discussion:

On June 12, 2023, the City Council awarded Construction Agreement No. CA2202.501 to Arizona Public Service Company (APS), for the Wall Street Overhead Power Conversion to Underground Design and Construction Services. This project was for undergrounding existing power lines to accommodate the Wall Street Improvements, located between Chicago Street and Frye Road in Downtown Chandler, otherwise known as Wall Street Phase 1. The above-ground dry utilities were placed underground in a joint trench and additional transformers were installed to allow for future redevelopment along Wall Street.

During construction, additional design and construction efforts were required by

APS due to unforeseen utility conflicts and additional work to accommodate future redevelopment. The city anticipates a portion of the completed dry utility work will be reimbursed.

Change Order No.1 is provided for additional design, project management and construction services by APS including joint trenches, potholes, communication conduit equipment, a Frye Road crossing trench for Lumen, and temporary curb stops. In addition, electrical labor and material cost increased due to the size of two 3 Phase transformers.

An additional 365 calendar days have been added for a revised total of 449 calendar days to final completion, following the Notice to Proceed.

Evaluation:

Staff reviewed the scope of work, billing rates, and total fee for Change Order No. 1 and determined them to be reasonable.

Financial Implications:

Original Contract - $1,251,239.72
Change Order No.1 - $330,433.71, 26% of original Staff Approved
Revised Agreement Amount - $1,581,673.43

With the change order increase, the appropriation transferred from General Fund Contingency to the Wall Street program will cover $228,467 with the remainder to be paid from the existing Wall Street program funding in the amount of $101,967.

Fiscal Impact

Account No.	Fund Name	Program Name	Dollar Amount	CIP Funded Y/N
411.4320.5219.0.6CA669	Street GO Bonds	Wall Street Improvements	$7,268	Y
401.4320.5219.0.6CA669	Gen'l Gov't Capital	Wall Street Improvements	$323,166	Y

Attachments

Change Order No. 1
Location Map

Docusign Envelope ID: D3FE6BC7-1C2A-445E-8A3E-BF8C8FCFBAFA

CHANDLER arizona
Community of Innovation

CHANGE ORDER NO.: 1
DATE: 7/30/2025

This Change Order No. 1 ("Change Order No. 1") to the construction services agreement is made by and between the City of Chandler, Arizona Public Service Company, an Arizona municipal corporation, ("City") and ("Contractor"), on this _____ day of _____, 2025 ("Effective Date" by Clerk).

Change Order not valid until signed by both the City and the Contractor. Contractor's signature indicates Agreement herewith, including any adjustments in the Agreement Price or Agreement Time.

Project Name:	**Wall Street Overhead Power Conversion to Underground Design and Construction Services**		
Project No.:	**CA2202.501**		
User Dept.:	**Cultural Development - Downtown**	NTP Date:	**7/10/2023**

TO:	**Arizona Public Service Company** (Contractor)	**P.O. Box 53933 Phoenix, AZ 85072 M.S. 3177** (Mailing Address)
	Ronnie Gandara (Contractor Representative)	**Ronnie.Gandara@aps.com** (Email Address)

Contractor must make the following changes to this Agreement:
(Detail scope change (Exh. A) / cost breakdown (Exh. B), if needed)

See Exhibit A and B.

Amendment authorized by Owner Name: **Lauren Koll** **Date:** **7/29/2025**

Original Agreement amount:	**$1,251,239.72**
Previous Change Order total:	**$0**
Last Agreement amount approved by Council:	**$1,251,239.72**
This Change Order:	**$330,433.71**
This Change Order + previous Change Order(s) not approved by Council total:	**$330,433.71**
Revised Agreement total:	**$1,581,673.43**

Council Approval Required (yes indicates approval required)	**YES**	**NO**
Change Order(s) total over $100,000:	☒	☐
Change Order(s) total causes Agreement to exceed $100,000:	☒	☐

Agreement Time	
Agreement time prior to this Change Order (including previous change order(s):	**84** Calendar Days
Net change resulting from this Change Order:	**365** Calendar Days
Revised Agreement time (including this Change Order):	**449** Calendar Days

Council Approval (if applicable)	
Council Approval Date:	**8/14/2025**

THE ABOVE IS AGREED TO BY:

"CITY"
CITY OF CHANDLER

Mayor

RECOMMENDED BY:

Daniel Haskins August 19, 2025
Daniel Haskins, P.E.

APPROVED AS TO FORM:

City Attorney

ATTEST:

City Clerk Seal

"CONTRACTOR"
ARIZONA PUBLIC SERVICE COMPANY

Ron Gandara August 19, 2025
Signature Date

Ron Gandara
Print Name

Customer Project Consultant
Title

ronnie.gandara@aps.com
Signer Email Address

Docusign Envelope ID: D3FE6BC7-1C2A-445E-8A3E-BF8C8FCFBAFA

EXHIBIT A and B

Sta. 3277
P.O. Box 53933
Phoenix, AZ 85072

Hafiz Noor
City of Chandler
215 E Buffalo St
Chandler, AZ 85225

PROJECT: City of Chandler #CA2202.501
LOCATION: Wall Street – Chicago St to Frye Rd

Dear Hafiz,

Enclosed is the sales invoice (AR048000XXX) for the above-mentioned project. This final billing, as agreed to by the May 11, 2023, Letter of Agreement (LOA), which authorized the cost for APS to convert existing overhead 12kV to underground at Wall Street from Chicago St to Frye Rd as part of City Project #CA2202.501. Construction work was completed October 29, 2024. Estimated project cost was $1,251,239.72. Actual project costs are $1,581,673.60. **Total cost to Chandler is $1,581,673.60.**

The additional $330,433.71 in costs are as follows:

• **City of Chandler change orders** (slot trenches, potholes, communication conduit material, Frye Rd crossing trench for Lumen, temporary curb stops, relocate sewer service, locate service for city contractor)	$203,336.02
• **APS Actuals increased as follows:**	
Engineering (design revisions and increased project management)	$46,557.13
Electrical Labor (actuals over estimated costs)	$ 9,189.91
Material (Increased size for two 3ph transformers at city request, actuals over estimated costs)	$ 71,350.65
Total cost additional work	$330,433.71

This represents APS actual costs and is the final billing for all APS work associated with this project. Please remit payment in the amount of **$1,581,673.60** to the address listed at the top of the attached sales invoice.

Should you have any questions concerning this project, please call me at 602-320-7069. Thank you for your cooperation and attention to this matter.

Sincerely,

Ron Gandara
Customer Project Consultant
Construction Project Management

Encl.

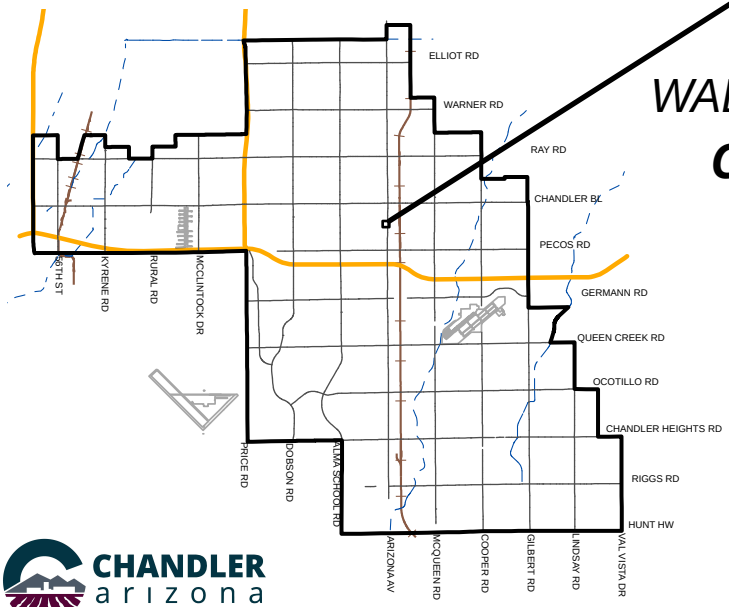

WALL STREET **OVERHEAD POWER LINES CONVERSION TO UNDERGROUND CHANGE ORDER NO. 1**

PROJECT NO. CA2202.**5**01

MEMO NO. CP2**6-0**2**3**

PROJECT SITE

CHANDLER arizona

NTS

ChanGIS

F:\ENGINEER\GENSERV_ArcGISPro_Shared\Map Requests\Capital Projects\2023\Capital_Projects_Map_Requests_2023\Capital_Projects_Map_Requests_2023.aprx 4/21/2023 maricelah

City Council Memorandum Development Services Memo No.

Date: September 15, 2025
To: Mayor and Council
Thru: John M. Pombier, Acting City Manager
Leah Powell, Deputy City Manager

From: Kevin Snyder, Development Services Director
Subject: Resolution No. 5939 - Pre-Annexation Development Agreement between City of Chandler and Chandler Acquisition I, LLC

Proposed Motion:

Move City Council pass and adopt Resolution No. 5939 approving the Pre-Annexation Development Agreement between the City of Chandler and Chandler Acquisition I, LLC.

Background/Discussion

Beginning in 2022, Dominium, an affordable housing development and management company, pursued the development of an affordable housing project on approximately 23.46 acres comprised of two parcels of land in unincorporated Maricopa County at the northwest corner of Pinelake Way and Ocotillo Road. The affected parcels are identified as Parcel Number 303-41-020L and Parcel Number 303-41-020M. This project was opposed by residents and the City of Chandler for being inconsistent with the City's General Plan and Airpark Area Plan. The currently adopted Chandler General Plan (adopted April 12, 2016) designates the subject parcels of land as “Employment”. The General Plan Future Land Use Plan Map describes the Employment land use designation as one that “focuses attention on strengthening the community’s economic base by expanding the growth areas and identifying a variety of employment areas for future growth. Major employers, knowledge-based industries, and industrial/business parks are allowed within Employment.” The currently adopted Airpark Area Plan (originally adopted November 5, 1998, and updated on October 14, 2021) designates the site as “Industrial District”. This designation contains a series of goals and

strategies. Goal 3 for this designation states “Encourage development in the Industrial District that is designed to be flexible in use & that can accommodate a mix of office, showroom, & potentially limited manufacturing within the same building.”

In 2024, Dominium representatives submitted a land use entitlement application for an affordable housing project to Maricopa County Planning and Zoning for the two parcels of land. Because these parcels are currently unincorporated, Maricopa County is the regulatory authority for the development of these parcels. Following receipt of a conditional approval recommendation from the Maricopa County Planning and Zoning Commission in November 2024, the Maricopa County Board of Supervisors held a public hearing on December 11, 2024 to consider the Commission's recommendation. At the conclusion of this public hearing, the Supervisors voted to table the matter to a date-uncertain and directed the applicant to work with the City of Chandler. Representatives for the City of Chandler and Dominium subsequently held several meetings but did not reach any consensus on revisions to the project development concept. Dominium submitted a revised land use entitlement application to Maricopa County Planning and Zoning in early 2025 that proposed an industrial-oriented project only with no residential component. On April 10, 2025, the Chandler Development Services Director submitted a letter to the attention of the Director of the Maricopa County Planning and Development Department responding to the revised application. The letter noted the following: a) annexation into the City of Chandler is required for the provision of public water and sanitary sewer service; b) a pre-annexation agreement is required and must be approved by the City Council and executed prior to any annexation application; c) land uses at the site must be consistent with the General Plan and Airpark Area Plan; d) the County should specify additional land uses identified in the letter as prohibited for consistency with the City's land use policies; warehouses should be specified as a prohibited land use by the County; e) data centers should be a prohibited land use by the County; and f) required water, sanitary sewer and transpotration improvements should be completed in conformance with City standards and regulations. After the City's transmittal of the April 10, 2025 letter, Dominium representatives requested a continuance of the scheduled public hearing before the Maricopa County Board of Supervisors. Following this continuance request, City staff and Dominium representatives met multiple times to discuss and negotiate the elements of a pre-annexation development agreement.

The pre-annexation development agreement has been prepared to ensure that the City's land use policies, building and safety standards, engineering regulations and transportation standards are or will be complied with. Dominium will be limited to obtaining County approval for zoning and site development, but only those uses that are allowed in the City's Planned Industrial-1 (I-1) zoning district, unless

prohibited by the pre-annexation development agreement, will be allowed. Per the annexation agreement, the City will have the ability to concurrently approve with the County during its review process all specified land uses, building design, site design, landscape design, parking area layouts and site access points. Further, this agreement requires that annexation occur prior to any construction at the project site.

At the direction of the Acting City Manager, city staff contacted property management representatives for Pinelake Place and Kerby Estates that are located south and southeast of the project site to notify them of the pre-annexation development agreement process and answer questions and provide information on the allowable types of future development. At present, city staff have not heard back from the representatives but will provide a summary of any discussions prior to or at the Council meeting on this matter.

Attachments

Resolution No. 5939

Vicinity Map

RESOLUTION NO. 5939

AUTHORIZING A PRE-ANNEXATION DEVELOPMENT AGREEMENT BETWEEN THE CITY OF CHANDLER AND CHANDLER ACQUISITION I, LLC ("DEVELOPER"), FOR THE DEVELOPMENT OF LIGHT INDUSTRIAL USES ON 23.4 ACRES OF PROPERTY LOCATED EAST OF THE NORTHEAST CORNER OF ARIZONA AVENUE AND OCOTILLO ROAD IN MARICOPA COUNTY, ARIZONA.

WHEREAS, Developer owns approximately 23.4 acres of property located east of the northeast comer of Arizona Avenue and Ocotillo Road in Maricopa County, Arizona as legally described in the pre-annexation development agreement that is the subject of this resolution (the "Property"); and

WHEREAS, the Property is currently zoned by Maricopa County as RU-43 for large-lot single-family residential, and Developer is processing a rezoning application in Maricopa County to have the property zoned for light industrial uses and has requested that the city provide water and sewer service to the Property; and

WHEREAS, the City Council has determined that it is in the best interests of the citizens of Chandler to require annexation of the Property under A.R.S. § 9-471 and Chandler City Code Section 52 in connection with providing city services to the Property; and

WHEREAS, Developer has agreed to comply with certain development requirements and conditions to ensure that the city's general plan and design standards are met for certain on- and off-site infrastructure; and

WHEREAS, A.R.S. § 9-500.05 authorizes City and Developer to enter into a pre-annexation development agreement for the purpose of facilitating annexation of the property for future development.

NOW, THEREFORE, BE IT RESOLVED that the City Council of the City of Chandler, Arizona, as follows:

<u>Section 1.</u> Approves the Pre-Annexation Development Agreement with Developer in substantially the form shown in Exhibit "A" (the "Agreement").

<u>Section 2.</u> Authorizes the Mayor to execute the Agreement and any related documents.

PASSED AND ADOPTED by the Mayor and City Council of the City of Chandler, Arizona, this _____ day of September, 2025.

ATTEST:

_____ _____
CITY CLERK MAYOR

CERTIFICATION

I HEREBY CERTIFY that the above and foregoing Resolution No. 5939 was duly passed and adopted by the Council of the City of Chandler, Arizona, at a regular meeting held on the _____ day of September, 2025 and that a quorum was present thereat.

_____
CITY CLERK

APPROVED AS TO FORM:

_____
CITY ATTORNEY TA

Exhibit “A”

After recording, return to:

CITY OF CHANDLER
City Clerk's Office
P. O. Box 4008, MS 606
Chandler, AZ 85244

PRE-ANNEXATION DEVELOPMENT AGREEMENT

This Pre-Annexation Development Agreement **("Agreement")** is entered into as of the "Effective Date" set forth below, by and between the **CITY OF CHANDLER,** an Arizona municipal corporation **("City"),** and **CHANDLER ACQUISTION I, LLC,** a Minnesota limited liability company **("Owner").** City and Owner may be referred to in this Agreement individually as a **"Party"** and collectively as the **"Parties."**

RECITALS:

A. Chandler Acquisition I LLC, a Minnesota limited liability company (the "Owner") owns approximately 24.59± acres of property located east of the northeast corner of South Arizona Avenue and East Ocotillo Road, at the northwest corner of Pinelake Way and Ocotillo Road, in Maricopa County, Arizona, which is legally described in the attached **Exhibit A** (the **"Property"**).

B. The Property is currently within an unincorporated area of Maricopa County and within City's municipal planning area.

C. The Property is currently zoned Rural-43 (RU-43) in Maricopa County.

D. Owner desires to rezone the Property from RU-43 to IND-2 (Light Industrial) with an Industrial Unit Plan of Development Overlay (IUPD) in Maricopa County. Owner has requested that City provide water and sewer service to the Property.

E. City has determined that it will require annexation of the property under A.R.S. § 9-471 and Chandler City Code Section 52.

F. The Parties are entering into this Agreement under A.R.S. § 9-500.05 to facilitate the annexation of the Property for development and to provide for certain terms, conditions, restrictions and requirements for the provision of municipal services, annexation of the Property, and future development of the Property.

AGREEMENT:

NOW, THEREFORE, in consideration of the above premises and mutual promises set forth in this Agreement, the Parties state, confirm and agree as follows:

1. **Incorporation of Recitals.** The Recitals are hereby incorporated into this Agreement as though fully restated.

2. **Annexation.** Prior to the commencement of construction on the Property, City agrees to initiate proceedings to annex the Property into the City and Owner agrees to sign and join in the annexation petition. City and Owner agree to use their respective best efforts to complete the annexation of the Property as close as reasonably possible to the minimum time periods established by A.R.S. § 9-471. Notwithstanding the foregoing, Owner agrees that City may annex the Property pursuant to A.R.S. § 9-471(T) without obtaining Owner's signature on a petition for annexation. However, the City shall not initiate the annexation until after the County has voted to approve the zoning designation sought by Owner as described in this Agreement. Notwithstanding the foregoing, annexation of the Property is subject to the review and approval of the Chandler City Council, and the Parties agree that if the council elects to not annex, this Agreement remains effective and such decision to not annex does not constitute a default under this Agreement.

3. **County Rezoning & City Equivalency Zoning.** Developer agrees to apply for IND-2 zoning with an IUPD overlay through Maricopa County consistent with the use restrictions listed in this Agreement. Developer may not apply for any other zoning designation. During the rezoning process with Maricopa County, Owner agrees that the County and City shall have concurrent review authority pertaining to the processing of all land use entitlement applications submitted directly to the County for its approval. Specifically, Owner agrees that the County and City shall concurrently approve all specified land uses, building design, site design, landscape design, parking area layouts and site access points. Owner agrees to provide City the opportunity to provide feedback and comments on all proposals submitted to County staff, and Owner agrees to incorporate City's requested changes on all submittals to the County. City agrees to provide comments within 60 business days following a submittal unless there are changes to the City's published review times. City agrees to review all design submittals pursuant to this paragraph without undue delay and within the timeframes that are customary for similar projects in the City of Chandler. Upon annexation, the City shall follow the legally-prescribed procedures under State statutes and City ordinances to place the City's zoning equivalent to County's then-current zoning and entitlements, on the Property, so that the Property can develop in substantial conformance with County and City approvals, subject to applicable City development standards. The Parties agree that if Owner receives County and City approvals necessary to proceed with the development, no further approvals or hearings before the City of Chandler Planning and Zoning Commission or Chandler City Council will be required, unless Owner proposes amendments or modifications to previously granted approvals. In the event that such amendments or modifications are requested, Owner shall demonstrate compliance to applicable City standards.

4. **Building Permit Review Through City after Annexation**. Owner may not seek to obtain building permits from the County and Owner will only submit building plans to the City, which submittal may not happen until after the annexation blank petition has been filed with the

Maricopa County Recorder, with no permits issued until the annexation is approved by the Chandler City Council. The City agrees to ensure that all permits are processed and approved efficiently. Developer agrees to provide submittals that are sufficiently complete and code compliant for City to provide meaningful review, and if Developer has done so, City agrees to provide first review comments within thirty (30) business days of the initial plan submittal, second review comments within fifteen (15) business days of resubmittal, and third and any subsequent review comments (if needed) within ten (10) business days of each respective resubmittal.

5. **Water and Sewer Service.** City agrees to provide water and sewer service to the Property. Owner shall be responsible for the installation of domestic water service, fire service, and sanitary sewer service lines from City's existing facilities in Ocotillo Road to the Property (the "Improvements"), including design, engineering, construction, inspection and testing of the Improvements in accordance with City standards in effect at the time permits for the Improvements are issued. Upon Owner's execution of this Agreement, City shall provide a water and sewer service "will-serve" letter to Owner for use in certifying to Maricopa County that such services will be provided to the Property. Owner understands and acknowledges that it is subject to the Sustainable Water Allocation Regulations of City Code Chapter 52, Article VI, and City's agreement to provide a "will serve" letter does not entitle Owner or any future developer to receive water in an amount that exceeds the Tier I water allocation for the specific use that occurs on the Property, or for any use that violates the terms and conditions of this Agreement. City agrees to waive its "out-of-city" fees and charges as outlined in City Code Section 50. Owner shall be subject to all applicable water and sewer system development fees, buy-in assessments, permit fees, plan review fees, inspection fees, and taxes per City Code. Installation of the Improvements shall be deemed complete when accepted by the City Engineer, and when so accepted, all lines, pipes, mains and other appurtenances that are a part of the Improvements and situated within rights-of-way or easements dedicated to or otherwise owned by City shall become the property of City.

6. **Transfer of Water Rights.** Within thirty business days after annexation, Owner shall transfer to the City all water rights to the City that are associated with or appurtenant to the Property, including, but not limited to, any grandfathered right to the pumping and use of groundwater on the Property and related infrastructure.

7. **Other City Services.** Upon annexation, City shall provide all municipal services to the Property to the same extent and upon the same terms and conditions as those services are provided to other real property within City's municipal limits.

8. **City Ordinances, Regulations, Codes, Policies and Procedures.** Except as expressly provided in this Agreement, upon annexation all City ordinances, regulations, codes, fees, policies and procedures in existence, now or in the future, shall apply to the Property.

9. **Civil Engineering.**

9.1 **Buy-in Assessment**. Pursuant to the Chandler Municipal Code, an area buy-in assessment shall be required for any development of the Property. The future developer(s) of the Property shall pay to the City a per acre buy-in assessment with prices

calculated at time of formal submittal and subject to yearly adjustments.

9.2 **Pinelake Way Waterline.** Pursuant to Subsections 52-24 through 52-29 of the Chandler Municipal Code, any developer of the Property shall be required to construct a twelve (12) inch public waterline within Pinelake Way from its intersection at Ocotillo Road to connect (unless such connection has already been completed) into the proposed public main adjacent to the Chandler Unified School District (CUSD) Bus Yard, unless such connection has already been completed, in which case a buy-in assessment may apply.

9.3 **Pinelake Way Sewer Main.** Pursuant to Subsections 51-11 through 51-21 of the Chandler Municipal Code, any developer of the Property shall be required to construct an eight (8) inch public sewer main within Pinelake Way along the project site's Pinelake Way frontage.

10. **Traffic Engineering**

Site Access. Owner agrees to design the Property's driveway access points to comply with City traffic design standards. In addition, the City is in the process of seeking approval for a railroad quiet zone from the Federal Railroad Administration pursuant to 49 C.F.R. § 222 for the railroad adjacent to the Property. Accordingly, Owner agrees to ensure that any access on Ocotillo Road is located at least 245 feet east of the Property's western boundary (150 feet east of the existing railroad crosshatches), unless otherwise approved by the City's Transportation Director or her designee. Additionally, access on Ocotillo Road must be located at least 250 feet west of the Pinelake Way alignment, unless otherwise approved by the City's Transportation Director or her designee

Notwithstanding the foregoing, if the Site is not yet developed and federal regulations governing quiet zones require alternative access locations, the Owner and the City shall work in good faith to identify and establish access points that comply with applicable federal standards for railroad quiet zones.

10.1 **North Side Street Improvements**. Pursuant to Subsections 47 and 48 of the Chandler Municipal Code, Owner shall construct permanent south half-street improvements across the north side of the property and (unless otherwise approved by City) a full, temporary cul-de-sac at the northwest corner of the project site to allow for vehicles to turn around within the public right-of-way until the final permanent cul-de-sac is constructed by Developer and the adjacent owner north of the Property. If cul-de-sac improvements have already been completed by the adjacent owner north of the Property, Developer will only be required to construct its permanent half cul-de-sac on the Property. Construction of a 24-foot minimum pavement section to allow for two-way traffic shall be required.

10.2 **Traffic Signal.** Pursuant to Chapters 47 and 48 and Subsection 47-15 of the Chandler Municipal Code, Owner shall construct a full intersection traffic signal at Pinelake Way and Ocotillo Road and if necessary shall obtain an easement from the adjacent

property at the northeast corner of this intersection, with assistance from the City (but at no monetary cost to City). Participation in an agreement with City for partial reimbursement of the cost of construction of the traffic signal may be available. All future access onto the project site via Pinelake Way shall demonstrate compliance to the City of Chandler Engineering Design Standards Manual, Figure 4-K.

10.3 **East Side Street Improvements**. Pursuant to Chapters 47 and 48 of the Chandler Municipal Code, Owner shall construct permanent west half-street improvements of Pinelake Way across the east side of the Property, including a 24-foot minimum pavement section to allow for two-way traffic and either additional permanent roadway improvements up to the property line or an appropriate shift in centerline to the property line north of Ocotillo Road (with appropriate distances and transitions). Further, construction of the full width pavement of Pinelake Way extending north from Ocotillo Road for 250 lineal feet and appropriate tapers to allow for lane alignment with the existing Pinelake Way south of Ocotillo Road shall be required.

11. **Prohibited Uses**. Notwithstanding any use being permitted pursuant to the County zoning, or the development plan, the uses permitted on the Property shall be those uses allowed in City's I-1 district that are not otherwise prohibited by this section. Owner shall request zoning in the County that permits only City of Chandler I-1 uses and incorporates the list of prohibited uses in this section. Developer agrees that the following uses are not allowed on the Property, and Developer will include the following list of prohibited uses in its development proposal submitted to the County with its request for re-zoning:

- Data Centers
- Automobile sales, service and rental
- Boat sales and rental; bowling alleys; equipment rentals and sales
- Hospitals, clinics and kennels for animals
- Mobile home, travel trailer and recreational vehicle sales and service
- Automobile laundries
- Automobile repair shops and garages
- New and used, automobile and golf cart sales, and rentals
- Health spas and public gyms
- Conservatories or studios
- Art, dancing or music; department stores
- Drive-in restaurants and refreshment stands
- Electrical fixtures and appliance sales
- Furniture stores; paint and wallpaper stores
- Pet shops; pool halls or billiard centers
- Rental services: household, lawn, garden, sickroom or office equipment
- Restaurants and cafes (including drive-throughs) including patios, cocktail lounges, and outside dining and drinking areas
- Retail stores; veterinary hospitals
- Clinics and kennels for dogs, cats and small animals
- Antique shops; arcades
- Art galleries
- Bakery shops; banks

- Barber and beauty shops
- Book, stationery and gift shops
- Business schools
- Candy shops
- Churches and houses of worship
- Cleaning agencies, laundry agencies, pressing establishments and self-service laundries, including self-service dry-cleaning machines
- Clock and watch repair shops
- Clothing and dry good shops, including clothing and costume rental
- Craft and hobby shops
- Day nurseries and nursery schools
- Delicatessen shops
- Dress shops
- Drugstores and soda fountains
- Florist shops
- Gasoline service stations
- Grocery stores and meat markets
- Hardware shops
- Household appliance shops
- Ice cream shops
- Jewelry shops
- Key, locksmith or gun shops
- Photographer's and artist's studios
- Private schools operated as a commercial enterprise
- Public facilities such as libraries, museums, parks, playgrounds, community buildings including police stations, post offices and other community service buildings
- Public schools; elementary, high school and college
- Radio and television shops
- Secretarial or answering services
- Shoe repair shops
- Tailor shops
- Variety or notion stores
- Video rental stores

12. **General Provisions.**

12.1 **Term.** This Agreement shall become effective as of the date of full execution by the Parties and shall automatically expire upon complete and full buildout of the Property, including all required on-site and off-site improvements, and issuance of one or more certificates of occupancy. Upon expiration pursuant to this paragraph, the Parties agree to record a notice of termination of this Agreement with the Maricopa County Recorder's Office upon request from either Party. In addition, the Parties at any time may mutually elect to terminate this Agreement by executing and recording a mutual termination and release with the Maricopa County Recorder's Office.

12.2 **Notices and Filings.** Unless otherwise specifically provided in this Agreement, or unless written notice of a change of address has been previously given under this Section I 0.2, all notices, demands or other communication given hereunder shall be in writing and shall be deemed to have been duly delivered upon (A) personal delivery, (B) delivery by a recognized overnight courier (e.g., Federal Express, United Parcel Service) for next business day delivery, or (C) as of the fifth business day after mailing by United States certified mail, postage prepaid, addressed as follows:

To City:	Development Services Director City of Chandler P. 0. Box 4008, Mail Stop 405 Chandler, AZ 85244-4008 Phone: (480) 782-3410 Email: kevin.snyder@chandleraz.gov
With a copy to:	Chandler City Attorney P. O. Box 4008, Mail Stop 602 Chandler, AZ 85244-4008 Phone: (480) 782-4640 Email: kelly.schwab@chandleraz.gov
To Owner:	Chandler Acquisition I, LLC Attn: Owen Metz 9000 E Pima Center Pkwy, Suite 350 Scottsdale, Arizona 85258 Phone: (623) 264-6828 Email: ometz@dominiuminc.com
With a copy to:	Burch & Cracchiolo, P.A., 1850 N. Central Ave., Suite 1700 Phoenix, AZ 85004 Attn: Ed Bull Phone: (602) 234-9913 Email: EBull@bcattorneys.com

Email and telephone numbers are provided above for convenience only: notice by email or telephone is not sufficient legal notice under this Section.

12.3 **Default.** Failure or unreasonable delay by any Party to perform or otherwise act in accordance with any term or provision hereof shall constitute a breach of this Agreement by such Party. Any failure to pay money not cured within ten (10) business days after written notice is received by the non-paying Pa1ty shall constitute a default under this Agreement by the non-paying Party. Any other breach not cured within thirty (30) calendar days after written notice is received, shall constitute a default by the breaching Party

calendar days after written notice is received, shall constitute a default by the breaching Party under this Agreement; provided, however, that if the failure is such that more than thirty (30) calendar days would reasonably be required to perform such action or to comply with any term or provision of this Agreement, then the breaching Party shall have such additional time as may be necessary to perform or comply so long as the breaching Party commences performance or compliance within said thirty (30) calendar day period and diligently proceeds to complete such performance or fulfill such obligation after written notice is received by the breaching Party. Any notice of a breach shall specify the nature of the alleged breach and the manner in which said breach may be satisfactorily cured, if possible. Each Party shall have all rights and remedies for any breach that is not cured within the applicable cure period, except that each Party waives any right to seek recovery of, or recover, any indirect, consequential (including lost profits), exemplary, punitive, or other monetary damages of any kind, other than actual damages.

12.4 **Dispute Resolution.** In the event that there is a dispute under this Agreement which the Parties cannot resolve between themselves, the Parties agree that there shall be a forty-five (45) day moratorium on litigation during which time the Parties agree to attempt to settle the dispute by nonbinding mediation before commencement of litigation. The mediation shall be held under the commercial mediation rules of the American Arbitration Association or other rules mutually agreed upon. The matter in dispute shall be submitted to a mediator mutually selected by the Parties. In the event that the Parties cannot agree upon the selection of a mediator within seven (7) days, then within three (3) days thereafter, the City and Owner shall request the presiding judge of the Superior Court in and for the County of Maricopa, State of Arizona, to appoint an independent mediator. The mediator selected shall have at least five (5) years' experience in mediating or arbitrating disputes relating to development. The cost of any such mediation shall be divided equally between the Parties. The results of the mediation shall be nonbinding on the Parties, and any Patty shall be free to initiate litigation subsequent to the moratorium.

12.5 **Choice of Law, Venue, and Attorney's Fees.** Any dispute, controversy, claim or cause of action arising out of or related to this Agreement shall be governed by Arizona law. The venue for any such dispute shall be Maricopa County, Arizona, and each Party waives the right to object to venue in Maricopa County for any reason. The prevailing Party in any litigation initiated under this Agreement shall be entitled to recover its reasonable attorneys' fees and costs incurred in connection with such litigation.

12.6 **Good Standing and Authority.** The Parties represent and warrant that each is duly formed, validly existing, and authorized to conduct business under the laws of Arizona and that the individuals executing this Agreement on behalf of their respective Party are authorized and empowered to bind the Party on whose behalf each such individual is signing.

12.7 **Assignment.** The provisions of this Agreement are binding upon and shall inure to the benefit of the Parties, and all of their successors in interest and assigns; provided, however, that Owner's rights and obligations hereunder may be assigned, in whole or in part only to a person or entity that has acquired title to all or a portion of the Property

and only by a written instrument recorded in the Official Records of Maricopa County, Arizona, expressly assigning such rights and obligations. In the event of a complete or partial assignment by Owner, all of Owner's rights and obligations hereunder shall terminate effective upon the assumption by Owner's assignee of such rights and obligations.

12.8 **Third Parties.** No term or provision of this Agreement is intended to, or shall be for the benefit of any person or entity not a party hereto, and no such other person or entity shall have any right or cause of action hereunder.

12.9 **Waiver.** No delay in exercising any right or remedy under this Agreement shall constitute a waiver of such right or remedy; and no waiver of any breach shall be construed as a waiver of any preceding or succeeding breach of the same or any other covenant or condition of this Agreement.

12.10 **Further Documentation.** The Parties agree in good faith to execute such further or additional instruments and documents and to take such further actions as may be necessary or appropriate to fully carry out the intent and purpose of this Agreement. Such additional instruments and documents may require the approval of the City's Council.

12.11 **Fair Interpretation.** The Parties have been represented by counsel in the negotiation and drafting of this Agreement and this Agreement shall be construed according to the fair meaning of its language.

12.12 **Headings.** The headings of this Agreement are for purposes of reference only and shall not limit or define the meaning of any provision of this Agreement.

12.13 **Computation of Time.** In computing any period of time under this Agreement, the date of the act or event from which the designated period of time begins to run shall not be included. The last day of the period shall be included unless it is a Saturday, Sunday or legal holiday of City, in which event the period shall run until the end of the next day that is not a Saturday, Sunday or legal holiday of City.

12.14 **Entire Agreement.** This Agreement, together with the Exhibits attached hereto and incorporated by reference, constitutes the entire agreement between the Parties. All prior and contemporaneous agreements, representations and understandings of the Parties, oral or written are superseded by and merged in this Agreement. This Agreement may be amended only by a written agreement signed by the Parties.

12.15 **Time.** Time is of the essence of this Agreement and with respect to the performance required by each Party.

12.16 **Recordation.** City shall record this Agreement in the Official Records of Maricopa County no later than ten (10) days after the Effective Date.

[SIGNATURES APPEAR ON THE FOLLLOWING PAGES]

IN WITNESS WHEREOF, the Parties have executed this Agreement as of the _____ day of _____, 2025 (the "Effective Date").

CITY:

CITY OF CHANDLER, an Arizona municipal corporation

By:_____

Its:_____

Date:_____

APPROVED AS TO FORM:

_____
City Attorney TA

ATTEST:

_____
City Clerk

STATE OF ARIZONA)
) ss.
County of Maricopa)

On this _____ day of_____, 2025, before me personally appeared_____ of the CITY OF CHANDLER, an Arizona municipal corporation, for and on behalf thereof, whose identity was proven to me on the basis of satisfactory evidence to be the person who he or she claims to be, and acknowledged that he or she signed the above/attached document.

_____
Notary Public

My Commission Expires:

OWNER:
CHANDLER ACQUISITION I, LLC

_____

Owen C. Metz, Vice President

Date:_____

STATE OF ARIZONA)
) ss.
County of Maricopa)

On this_____ day of_____, 2025, before me personally appeared_____ the Vice President of Chandler Acquisition I, LLC, an Arizona limited liability company, for and on behalf thereof, whose identity was proven to me on the basis of satisfactory evidence to be the person who he or she claims to be, and acknowledged that he or she signed the above/attached document.

_____

Notary Public

My Commission Expires:

Exhibit A
Legal Description

Legal Description
Ocotillo & Pinelake
Zoning

Job No. 21-1200 May 9, 2023

A portion of Southeast Quarter of the Southwest Quarter of Section 15, Township 2 South, Range 5 East, of the Gila and Salt River Meridian, Maricopa County, Arizona, and more particularly described as follows:

COMMENCING at a rebar at the south quarter corner of said Section 15, from which a rebar at the southwest corner of said Section 15, bears South 89 degrees 04 minutes 27 seconds West (basis of bearing) 2,640.83 feet;

Thence along the South line of said Southwest Quarter, South 89 degrees 04 minutes 27 seconds West, 407.70 feet;

Thence departing said South line, North 0 degrees 26 minutes 59 seconds West, 85.00 feet to the **POINT OF BEGINNING**;

Thence South 89 degrees 04 minutes 27 seconds West, 46.82 feet;

Thence South 44 degrees 04 minutes 14 seconds West, 28.28 feet;

Thence South 89 degrees 04 minutes 27 seconds West, 748.58 feet to a point on the Easterly right-of-way line of that certain railroad known as the Southern Pacific Railroad;

Thence along said right-of-way, North 0 degrees 18 minutes 02 seconds West, 1257.94 feet to a point on the Northerly line of said Southeast Quarter of the Southwest Quarter of Section 15 ;

Thence along said Northerly line, North 89 degrees 04 minutes 22 seconds East, 811.96 feet;

Thence South 0 degrees 26 minutes 59 seconds East, 1237.93 feet to the **POINT OF BEGINNING**.

Containing an area of 1,022,270 square feet or 23.4681 acres, more or less.

REGISTERED LAND SURVEYOR
CERTIFICATE NO.
59228
MATTHEW G.
BUCHANAN
Date Signed 5/9/2023
ARIZONA, U.S.A.

EPS Group, Inc. • 1130 N Alma School Road, Suite 120 • Mesa, AZ 85201
Tel (480) 503-2250 • Fax (480) 503-2258

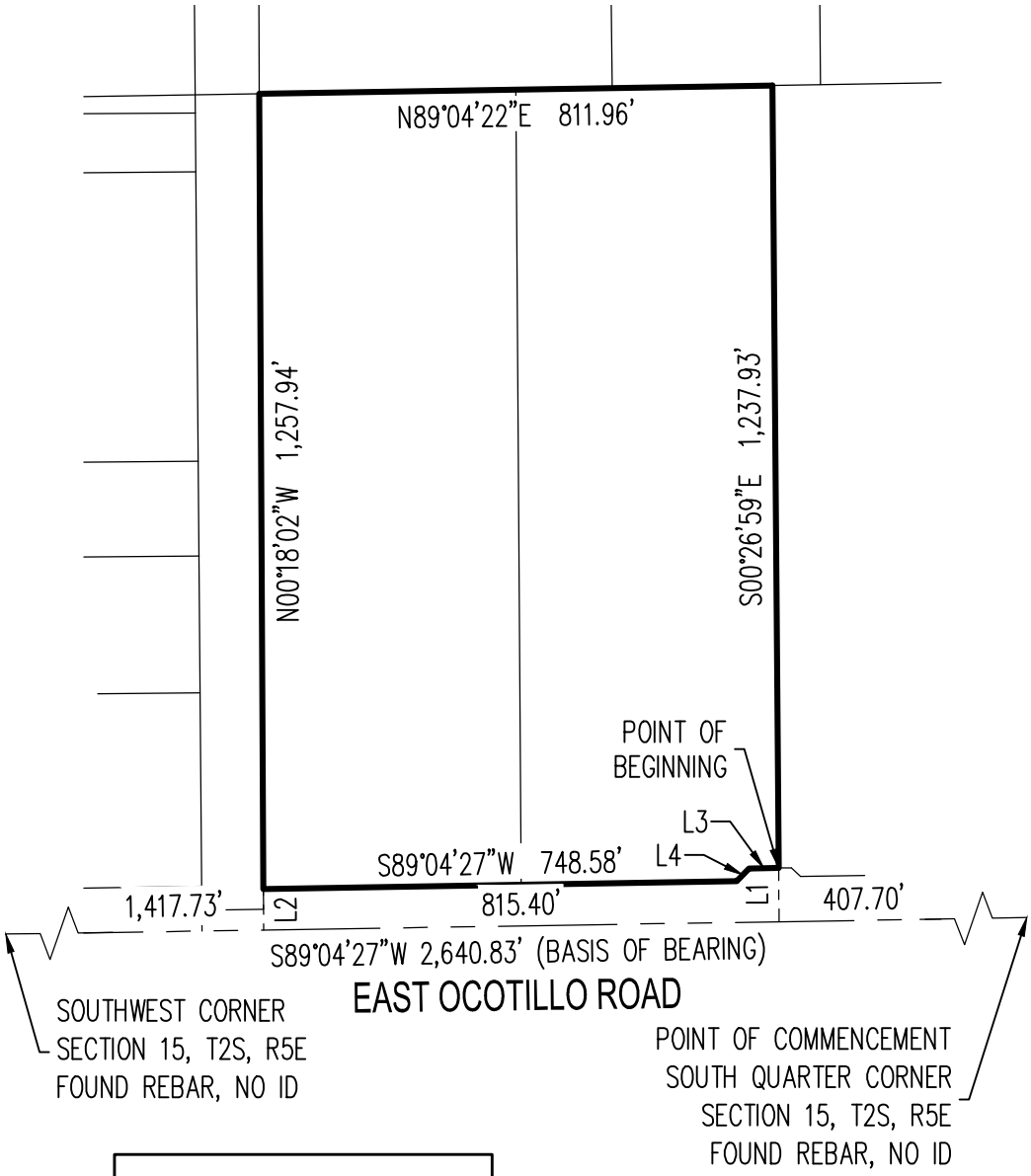

LINE TABLE		
LINE	BEARING	LENGTH
L1	S00°26'59"E	85.00'
L2	N00°18'02"W	65.00'
L3	S89°04'27"W	46.82'
L4	S44°04'14"W	28.28'

N.T.S.

21-1200

Ocotillo & Pinelake
Zoning

Exhibit

EPS GROUP
1130 N. Alma School Rd.
Ste. 120 Mesa, AZ 85201
T:480.503.2250 | F:480.503.2258
www.epsgroupinc.com

May 09, 2023 2:48pm S:\Projects\2021\21-1200\Land Survey\Legals\21-1200 LD01 - Zoning Legal.dwg

VICINITY MAP

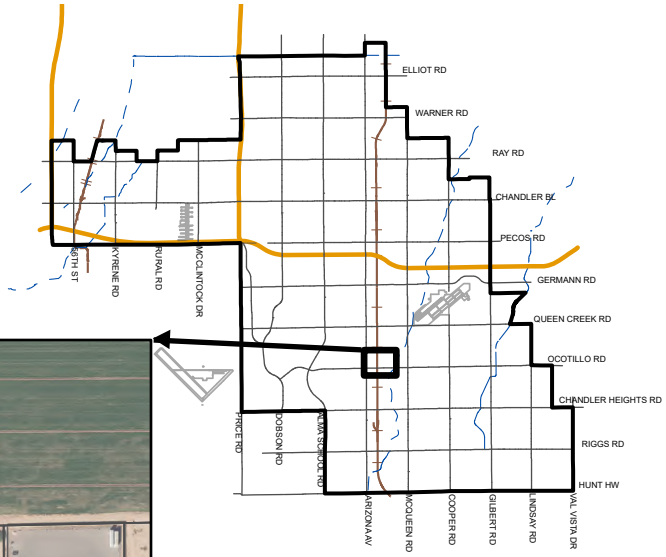

PROJECT AREA

NTS

ChanGIS

F:\ENGINEER\GENSERV_ArcGISPro_Shared\Map Requests\Development Services\2025\Parcel Vicinity Map\Parcel Vicinity Map\Parcel Vicinity Map.aprx 8/29/2025 CameronK

ITEM 9

City Council Memorandum Development Services Memo No.

Date: September 15, 2025
To: Mayor and Council
Thru: John M. Pombier, Acting City Manager
Leah Powell, Deputy City Manager
From: Kevin Snyder, Development Services Director
Subject: Temporary Construction Easement, Agreement for Temporary Construction Easement and Non-Exclusive Easements for Below-Grade Building Footings between the City of Chandler and S Arizona Avenue, LLC, an Arizona Based Limited Liability Company, for the Portion of the Building Located at 141 South Arizona Avenue

---

Proposed Motion:

Move City Council approve Temporary Construction Easement, Agreement Regarding Temporary Construction Easement and Non-Exclusive Easements for Below-Grade Building Footings between the City of Chandler and S Arizona Avenue, LLC, an Arizona Based Limited Liability Company, for the portion of the building located at 141 South Arizona Avenue provided that City execution of the two Non-Exclusive Easements shall be contingent upon the City's receipt of payment of the required one-time fees for these Easements.

Background/Discussion

On June 1, 2024, Serranos Mexican Restaurant at 141 S. Arizona Avenue in Downtown Chandler closed. The property was sold to S Arizona Avenue, LLC, managed by Joshua Martinez, who is redeveloping it into two spaces: Safe T Professionals, LLC, an environmental health and safety staffing firm currently at 25 S. Arizona Place, will move into new offices at 131 S. Arizona Avenue; and Tap N Taco, a sit-down restaurant, will occupy the remainder of the building at 141 S. Arizona Avenue.

Design review and necessary permits were obtained by March 2025, and construction began shortly after. During review, city staff required demolition and replacement of non-compliant walls along the southern and western property

lines, including installation of footings that extend into city-owned property and right-of-way. This triggered the need for temporary and permanent easements. City staff, in coordination with Legal, Development Services, and Public Works, prepared the necessary agreements. The non-exclusive easements for the installation of the below grade footings on city-owned property and right-of-way require payment of one-time fees for utilization of public space. These fees are $2,793 for the southern building wall easement and $1,862 for the western building wall easement, which total $4,655.

Mr. Martinez initially aimed to occupy the office by July 2025 and open the restaurant by December 2025. Due to delays, the office move is now expected by late September 2025, with the restaurant likely delayed until early to mid-2026. Temporary construction fencing was installed without prior city approval, making Martinez liable for any damage to city-owned assets.

In response to the declining health of nearby orchid trees, the City and Martinez's team coordinated irrigation improvements, fertilization, and plans for future pruning, tree protection, and landscape restoration post-construction.

Attachments

AgrmtRETempConstEas_SArizonaAvenueLLC

Non-Exclusive Easement for Below-Grade Bldg Footings - South Side

Non-Exclusive Easement for below-Grade Bldg Footings - West Side

TempConstEas_SArizonaAveLLC

Approved Plans - Excerpt

AGREEMENT REGARDING TEMPORARY CONSTRUCTION EASEMENT

THIS AGREEMENT REGARDING TEMPORARY CONSTRUCTION EASEMENT (this "Agreement") is executed as of the ____ day of _____, 2025 (the "Effective Date"), by and between CITY OF CHANDLER, an Arizona municipal corporation ("Grantor") and S Arizona Avenue, LLC, an Arizona limited liability company, ("Grantee," together with Grantor, the "Parties").

RECITALS

A. On the Effective Date, Grantor has granted to Grantee that certain Temporary Construction Easement of even date herewith (the "TCE") concerning construction of structural footings on the Parties' property. The TCE contains a description of those portions of Grantor's property that is governed by the TCE (the "TCE Property").

B. Under the TCE, Grantee will install structural concrete footings to support the façade of the structure that sits on Grantee's property (the "TCE Work"). Grantor agreed to grant the TCE upon the condition that Grantee perform the TCE Work in accordance with the terms and conditions of this Agreement.

C. The purpose of this Agreement is to set forth certain agreements between the Parties concerning the TCE Work, all as further set forth herein.

NOW, THEREFORE, for and in consideration of the mutual covenants and agreements contained herein and other good and valuable consideration, the receipt and sufficiency of which are hereby acknowledged, the Parties agree as follows:

1. Notice of Commencement. Grantee shall give Grantor not less than five (5) days advance written notice prior to Grantee's entry upon the TCE Property to the commencement of the TCE Work.

2. Preservation and Restoration of Landscaping. Grantee must exercise the highest degree of care in performing any work within the TCE Property to preserve all existing vegetation and landscaping facilities, including but not limited to trees, bushes, landscaping rock, and irrigation systems. Grantee shall not remove, damage, or disturb any trees present in the TCE Property. Upon completion of the construction, Grantee shall restore all disturbed landscaping to its original condition, including the reinstallation of landscaping features and irrigation systems. If any trees, bushes, or other plants are damaged or killed because of Grantee's activities, Grantee shall replace such vegetation with a plant of the same species, size, and height as the plant that was damaged or destroyed. Grantee shall be responsible for the maintenance and care of any replacement trees, bushes, or other landscaping facilities for a period of one (1) year following installation. All work under this clause shall be performed at Grantee's sole cost and expense.

3. Preservation and Restoration of Paving and Hardscape. Grantee shall exercise the highest degree of care in performing any work within the TCE Property to preserve all existing paving and hardscape features, including but not limited to concrete sidewalks, pavers, underground utilities, and any other paved surfaces. Grantee shall not remove, damage, or disturb any paving unless necessary for the completion of the authorized construction. If removal of any paving is required, Grantee shall replace such features with materials of the same type, color, pattern, and quality as those removed, ensuring that the restoration matches the original condition.

All restored paving shall meet applicable engineering and safety standards. Grantee shall not be responsible for pre-existing conditions or deterioration. Grantee may document conditions of the TCE Property via video or photography before beginning any work. Grantee shall repair and restore the TCE Property to a like or equivalent condition as existed prior to the commencement of the TCE Work and shall be responsible for any damages, claims, or losses occurring on the TCE Property during the term of the TCE caused by Grantee's use of the TCE Property or by the acts or conduct of Grantee's employees, agents, contractors, or assigns, including any damage to underground utilities or other subsurface facilities. All work under this clause shall be performed at Grantee's sole cost and expense.

4. Third Party Approvals. Grantee represents and warrants that it has obtained all required approvals from all applicable third parties, including without limitation any applicable utility companies, for the use of the TCE Property (including without limitation the areas thereof located within any utility easements encumbering the TCE Property, if any) and performance of the TCE Work, and that Grantee shall perform the TCE Work in strict compliance with all conditions and requirements of such third parties, for the granting of such approvals. Grantor shall reasonably cooperate with Grantee in obtaining any such approvals.

5. Insurance; Indemnity. Prior to entering the TCE Property, Grantee shall deliver to Grantor a certificate of insurance from Grantee's Contractor naming Grantor as an additional insured and evidencing not less than the following insurance coverage: (i) Commercial General Liability insurance with limits of liability not less than $1,000,000 per occurrence and $3,000,000 aggregate, which may be satisfied by Excess and/or Umbrella policies; (ii) Commercial Auto Liability insurance with combined single limits of liability not less than $1,000,000; and (iii) Workers' Compensation insurance in accordance with applicable statutory requirements. Grantee shall indemnify, hold harmless, pay, and reimburse Grantor, its agents, employees, and contractors, from, for, and against any and all suits, actions, claims, costs, fees, sums, amounts, losses, causes of action, damages, liabilities, and expenses (including reasonable attorneys' fees, court costs, and alternative dispute resolution expenses) caused by or arising out of Grantee or its agents, employees, and contractors entering upon the TCE Property and/or the performance of the TCE Work, or of any breach of this Agreement or the representations and warranties of Grantee contained herein.

6. Notices. All communications, notices, consents, approvals, and waivers required or permitted hereunder shall be given in writing and shall be effective upon personal delivery or direct facsimile transmission, or two (2) business days after being deposited with the U.S. Postal Service, registered or certified, return receipt requested, postage prepaid, or one (1) business day after being deposited with any commercial air courier or express service to the parties at their addresses set forth below:

Grantor:

City of Chandler, an Arizona municipal corporation
Mail Stop 407
P.O. Box 4008
Chandler, Arizona 85244-4008
Attn: Erich Kuntze, Real Estate Manager
Phone: (480) 782-3397
Fax: (480) 782-3365

Grantee:

Joshua Martinez
1846 E. Innovation Park Dr., Suite 100
Oro Valley, Arizona 85755
Phone: 602-820-3755

7. Litigation Expenses and Attorneys' Fees. In the event of litigation involving this Agreement, the prevailing party in any such action or proceeding shall be entitled to recover its costs and expenses incurred in such action from the other party, including reasonable attorneys' fees as determined by the judge of the court.

8. Miscellaneous. Time is of the essence with respect to this Agreement. Capitalized terms used but not defined herein shall have the meanings ascribed to them in the TCE. This Agreement may not be modified unless it is in writing and signed by all parties hereto. The provisions of this Agreement shall survive the expiration or earlier termination of the TCE. This Agreement and the TCE constitute the entire agreement between the parties written and verbal concerning the Temporary Construction Easement and the TCE Work. Whenever possible, each provision of this Agreement shall be interpreted in such a manner as to be valid under applicable law, but if any provision shall be deemed invalid or prohibited thereunder, such provision shall be deemed severed from this Agreement and this Agreement shall otherwise remain in full force and effect. This Agreement shall be governed by, construed and enforced in accordance with the laws of the State of Arizona. This Agreement may be executed by the signing in counterparts. The execution of this instrument by each of the parties signing a counterpart hereof shall constitute a valid execution, and this instrument and all its counterparts so executed shall be deemed for all purposes to be a single instrument. This Agreement is valid, binding, and enforceable against a party only when executed by an authorized individual on behalf of a party by means of (i) an electronic signature that complies with the federal Electronic Signatures in Global and National Commerce Act, state enactments of the Uniform Electronic Transactions Act, or any other relevant and applicable electronic signatures law; (ii) an original manual signature; or (iii) a faxed, scanned, or photocopied manual signature. Each electronic signature or faxed, scanned, or photocopied manual signature has for all purposes the same validity, legal effect, and admissibility in evidence as an original manual signature. This Agreement is effective upon delivery of one executed counterpart from each party to the other parties. In proving this Agreement, a party must produce or account only for the executed counterpart of the party to be charged.

The Parties have executed this Agreement as of the Effective Date above.

GRANTOR:

CITY OF CHANDLER, an Arizona municipal corporation

By:_____
Name:_____
Title:_____

Attest:

By: _____
City Clerk

Approved as to form:

By: _____
(Asst.) City Attorney TA

GRANTEE:

S ARIZONA AVENUE, LLC, an Arizona limited liability company

By:_____
Name: Joshua Martinez
Title: Manager

When recorded, mail to:
City Clerk
City of Chandler
Mail Stop 606
P.O. Box 4008
Chandler, AZ 85244-4008

APN # 303-10-109
Section 34, Township 1 South, Range 5 East

This document is exempt from Affidavit and Fee requirements pursuant to A.R.S. §11-1134.A.2.

NON-EXCLUSIVE EASEMENT FOR BELOW-GRADE BUILDING FOOTINGS

For and in consideration of the sum of Ten and no/100 dollars ($10.00) and other good and valuable consideration, the receipt of which is hereby acknowledged,

THE CITY OF CHANDLER, an Arizona municipal corporation

("Grantor"), hereby grants and conveys unto S ARIZONA AVENUE, LLC, an Arizona limited liability company ("Grantee"), a non-exclusive easement for construction of below-grade building footings ("Footings") with the right of ingress and egress for the purpose of installation and maintenance of the Footings as deemed necessary or appropriate by the Grantee under the Grantor's real property situated in Maricopa County, Arizona and described in **Exhibit A** (Legal Description) and depicted in **Exhibit B** (Drawing) attached hereto and made a part hereof (the "Property"). This easement does not permit Grantee to place any permanent facilities or materials on or above the surface of the Property where they are visible to pedestrians. Grantee must return the surface of the Property to its original condition upon completion of any construction or maintenance of Footings, excepting any pre-existing wear, deterioration, or conditions unrelated to Grantee's activities. Grantee may document pre-work conditions by photographs or video for reference. This obligation includes a full restoration of any hardscape, paving, or landscaping, including sidewalks, pavers, plants, rocks, utilities, or other materials that are present on the Property before Grantee performs work to install or maintain the Footings. Grantor retains the right to use the Property for any purposes that will not interfere with Footings constructed by Grantee pursuant to this non-exclusive easement. Grantor shall not construct, excavate, or otherwise alter the Easement Area in a manner that would impair the structural integrity or accessibility of the Footings without the prior written consent of the Grantee.

This easement is solely for the purpose of construction and future maintenance of the Footings described herein to provide structural support for the walls of the building present on Grantee's property at the time this easement is granted. If Grantee's property is redeveloped such that the building's walls are demolished, this easement will cease

unless otherwise agreed in writing by the parties, and Grantee must remove any Footings present within the Grantor's Property, and any new footings required for said redevelopment or other improvements made on Grantee's property will be contained within the Grantee's property. Grantor will have the right, at such time, to record an instrument to provide notice of termination of this easement. This Easement shall run with the land and shall be binding upon and inure to the benefit of the parties hereto and their respective successors and assigns.

Dated this _____ day of _____, 2025

GRANTOR: The City of Chandler, an Arizona municipal corporation

By: _____

Its: _____

STATE OF ARIZONA)
) ss
County of Maricopa)

The foregoing EASEMENT was personally acknowledged before me this ____ day of _____, 2025 by _____ as _____ for City of Chandler, who executed the foregoing instrument for the purposes therein contained.

_____
Notary Public

My Commission Expires:

Attest:

By: _____

Its: _____

EXHIBIT "A"
Legal Description

THE LAND REFERRED TO HEREIN BELOW IS SITUATED IN THE COUNTY OF MARICOPA, STATE OF ARIZONA AND IS DESCRIBED AS FOLLOWS:

Beginning at the southeast corner of Lot 487, TOWNSITE OF CHANDER, according to Book 5 of Maps, page 34, records of Maricopa County, Arizona.

Thence west along the south lot line of said Lot 487 a distance of 150.0 feet to the southwest corner of said Lot 487;

Thence continuing along the elongation of said south line of Lot 487 to a point that is 1.42 feet west of the east right-of-way line of Arizona Avenue;

Thence south 1.42 feet to a point that is 1.42 feet west of the east right-of-way line of Arizona Avenue;

Thence east along a line parallel to and 1.42 feet south of the south line of said Lot 487 a distance of 151.42 feet to a point 1.42 feet south of the southeast corner of said Lot 487;

Thence north a distance of 1.42 feet to the southeast corner of said Lot 487 also being the Point of Beginning.

Containing an area of 216.13 square feet or 0.005 acres more or less.

Note: The legal description above is based on county and municipal documents. It is not based on a boundary survey of the subject parcel.

EXHIBIT "B"
Depiction of Easement Area

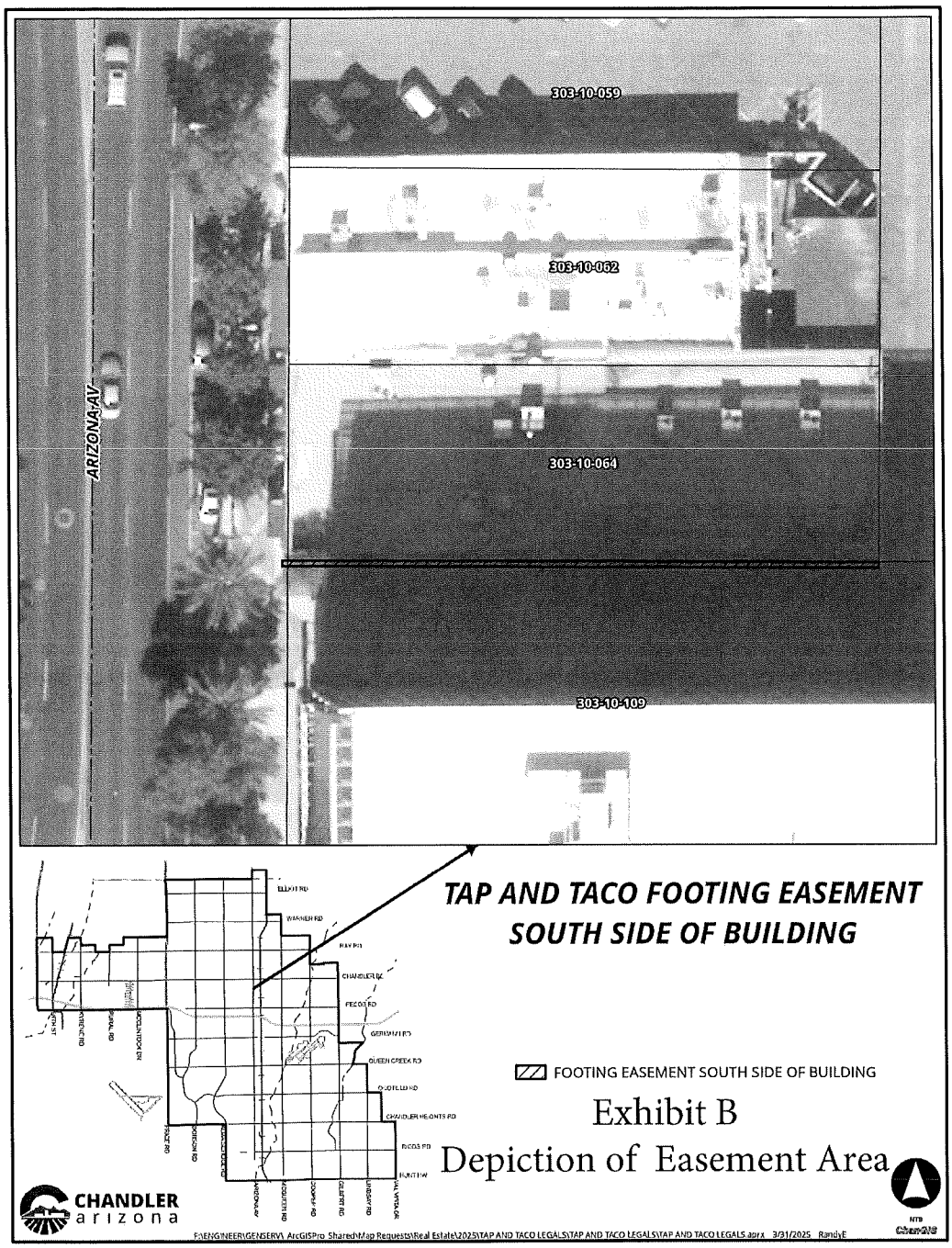

When recorded, mail to:
City Clerk
City of Chandler
Mail Stop 606
P.O. Box 4008
Chandler, AZ 85244-4008

APN # 303-10-109
Section 34, Township 1 South, Range 5 East

This document is exempt from Affidavit and Fee requirements pursuant to A.R.S. §11-1134.A.2.

NON-EXCLUSIVE EASEMENT FOR BELOW-GRADE BUILDING FOOTINGS

For and in consideration of the sum of Ten and no/100 dollars ($10.00) and other good and valuable consideration, the receipt of which is hereby acknowledged,

THE CITY OF CHANDLER, an Arizona municipal corporation

("Grantor"), hereby grants and conveys unto S ARIZONA AVENUE, LLC, an Arizona limited liability company ("Grantee"), a non-exclusive easement for construction of below-grade building footings ("Footings") with the right of ingress and egress for the purpose of installation and maintenance of the Footings as deemed necessary or appropriate by the Grantee under the Grantor's real property situated in Maricopa County, Arizona and described in **Exhibit A** (Legal Description) and depicted in **Exhibit B** (Drawing) attached hereto and made a part hereof (the "Property"). This easement does not permit Grantee to place any permanent facilities or materials on or above the surface of the Property where they are visible to pedestrians. Grantee must return the surface of the Property to its original condition upon completion of any construction or maintenance of Footings, excepting any pre-existing wear, deterioration, or conditions unrelated to Grantee's activities. Grantee may document pre-work conditions by photographs or video for reference. This obligation includes a full restoration of any hardscape, paving, or landscaping, including sidewalks, pavers, plants, rocks, utilities, or other materials that are present on the Property before Grantee performs work to install or maintain the Footings. Grantor retains the right to use the Property for any purposes that will not interfere with Footings constructed by Grantee pursuant to this non-exclusive easement. Grantor shall not construct, excavate, or otherwise alter the Easement Area in a manner that would impair the structural integrity or accessibility of the Footings without the prior written consent of the Grantee.

This easement is solely for the purpose of construction and future maintenance of the Footings described herein to provide structural support for the walls of the building present on Grantee's property at the time this easement is granted. If Grantee's property is redeveloped such that the building's walls are demolished, this easement will cease

unless otherwise agreed in writing by the parties, and Grantee must remove any Footings present within the Grantor's Property , and any new footings required for said redevelopment or other improvements made on Grantee's property will be contained within the Grantee's property. Grantor will have the right, at such time, to record an instrument to provide notice of termination of this easement. This Easement shall run with the land and shall be binding upon and inure to the benefit of the parties hereto and their respective successors and assigns.

Dated this _____ day of _____, 2025

GRANTOR: The City of Chandler, an Arizona municipal corporation

By: _____

Its: _____

STATE OF ARIZONA)
) ss
County of Maricopa)

The foregoing EASEMENT was personally acknowledged before me this ____ day of _____, 2025 by _____ as _____ for City of Chandler, who executed the foregoing instrument for the purposes therein contained.

_____
Notary Public

My Commission Expires:

Attest:

By: _____

Its: _____

EXHIBIT "A"
Legal Description

THE LAND REFERRED TO HEREIN BELOW IS SITUATED IN THE COUNTY OF MARICOPA, STATE OF ARIZONA AND IS DESCRIBED AS FOLLOWS:

Beginning at the southwest corner of Lot 487, TOWNSITE OF CHANDER, according to Book 5 of Maps, page 34, records of Maricopa County, Arizona.

Thence north along the west lot lines of said Lot 487 and Lot 485, TOWNSITE OF CHANDLER, according to Book 5 of Maps, page 34, records of Maricopa County, Arizona, a distance of 100.0 feet to the northwest corner of said Lot 485;

Thence west along a line that is the elongation of the north line of said Lot 485 a distance of 1.42 feet to a point;

Thence south along a line parallel to and 1.42 feet west of the west line of said Lots 485 and 487 a distance of 100.0 feet to a point;

Thence east a distance of 1.42 feet to the southwest corner of said Lot 487 also being the Point of Beginning.

Containing an area of 144.47 square feet or 0.003 acres more or less.

Note: The legal description above is based on county and municipal documents. It is not based on a boundary survey of the subject parcel.

EXHIBIT "B"
Depiction of Easement Area

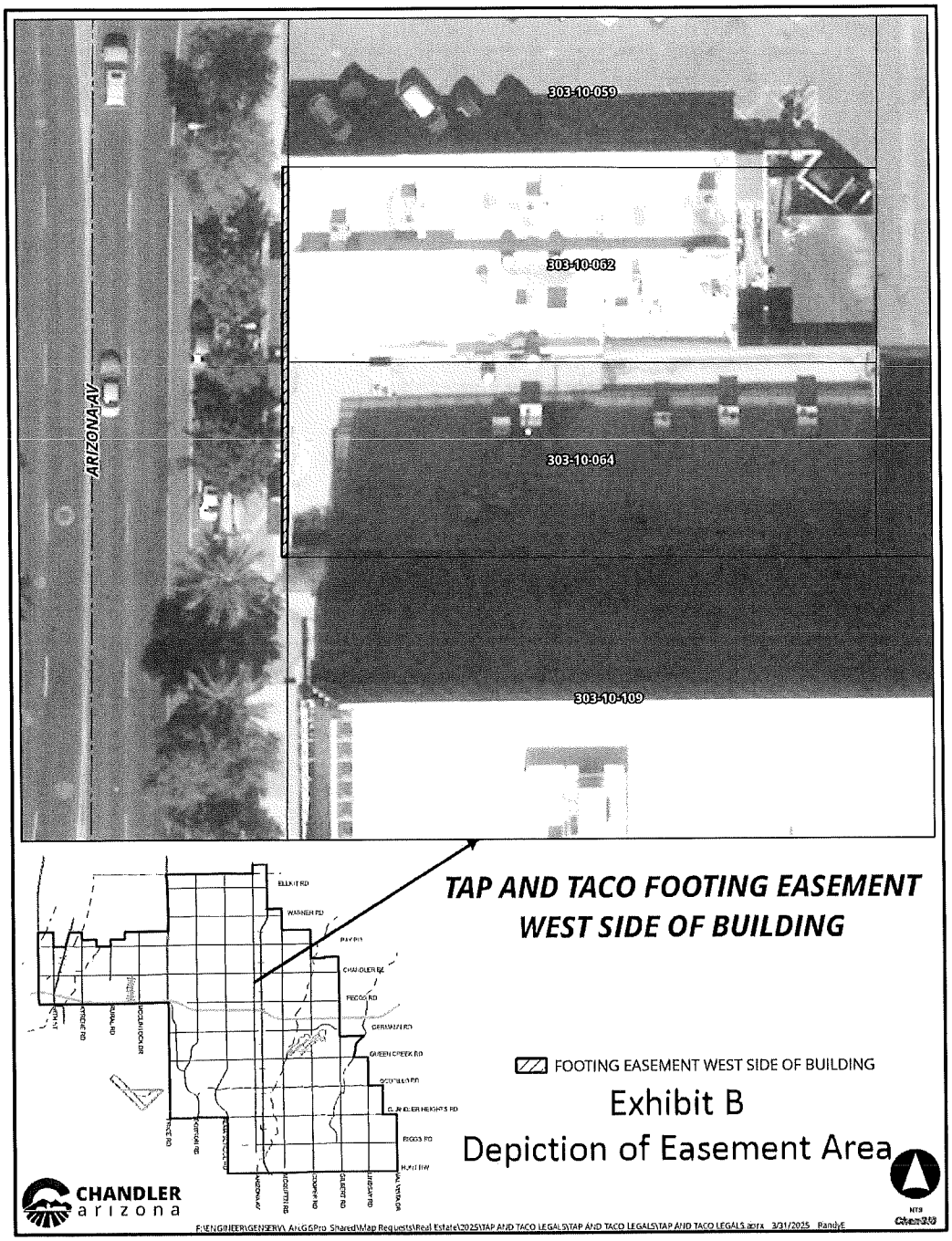

When recorded, mail to:
City of Chandler
City Clerk
P.O. Box 4008, Mail Stop 606
Chandler, AZ 85244-4008

APN: 303-10-109
Section 34, Township 1 South, Range 5 East

This document is exempt from Affidavit and Fee requirement pursuant to A.R.S. § 11-1134(A)(2).

TEMPORARY CONSTRUCTION EASEMENT

For and in consideration of the sum of TEN and No/100 Dollars ($10.00), and other good and valuable consideration, the receipt of which is hereby acknowledged,

CITY OF CHANDLER, an Arizona municipal corporation

("Grantor"), does hereby grant and convey to S ARIZONA AVENUE, LLC, an Arizona limited liability company ("Grantee"), a Temporary Construction Easement in connection with the construction of concrete structural footings on the structure located at 141 South Arizona Avenue (the "Project"). The purpose of this Temporary Construction Easement is to allow Grantee, its agents, contractors and assigns, to use the property, as described herein, for the construction of the Project. This Temporary Construction Easement shall be on, over, and across that certain real property situated in Maricopa County, Arizona, and more particularly described in Exhibit "A", attached hereto and made a part hereof by this reference (the "Easement Property"). A diagram depicting the Easement Property is attached as Exhibit B and made a part hereof by this reference.

The term of this easement shall be 365 days, commencing on June 9, 2025, and ending on June 8, 2026. In the event completion of the Project occurs earlier than the full term of this easement, Grantee may terminate the easement by written notice to Grantor. If additional time is needed for completion due to construction delays, Grantee shall have the right to request an extension not to exceed 90 days upon written notice.

Grantor covenants to and with Grantee and its assigns that he is lawfully seized and possessed of the Easement Property, that Grantor has good and lawful right to grant said easement interest, and that Grantor warrants and will defend the title to said easement interest against all claims and demands.

Grantee shall repair and restore the Easement Property to a like or equivalent condition as existed prior to the construction activity and shall be responsible for any damages, claims or losses occurring on the Easement Property during the term of this easement caused by Grantee's negligent use of the Easement Property or by the negligent acts or conduct of Grantee's employees, agents, contractors or assigns. Grantee shall not be responsible for correcting or

A.R.S. § 41-313(C) DISCLOSURES

Description of document this notarial certificate is being attached to:	
Type/Title	Temporary Construction Easement
Date of Document	
Number of Pages	Which includes Exhibits A
Add'l Signers (other than those named in the notarial certificate.)	None

EXHIBIT "A"

THE LAND REFERRED TO HEREIN BELOW IS SITUATED IN THE COUNTY OF MARICOPA, STATE OF ARIZONA AND IS DESCRIBED AS FOLLOWS:

Beginning at the southeast corner of Lot 487, TOWNSITE OF CHANDLER, according to Book 5 of Maps, page 34, records of Maricopa County, Arizona.

Thence west along the south lot line of said Lot 487 a distance of 150.0 feet to the southwest corner of said Lot 487;

Thence north along the west lot line of said Lot 487 a distance of 100.0 feet to the northwest corner of Lot 485 TOWNSITE OF CHANDLER, according to Book 5 of Maps, page 34, records of Maricopa County, Arizona;

Thence west along a line that is the elongation of the north line of said Lot 485 a distance of 8.0 feet to a point;

Thence south along a line parallel to and 8.0 feet west of the west line of said Lots 485 and 487 a distance of 110.0 feet to a point;

Thence east along a line parallel to and 10.0 feet south of the south line of said Lot 487 a distance of 166.5 feet a point;

Thence north a distance of 69.5 feet along a line parallel to and 8.5 feet east of the east property line of said Lots 485 and 487 to a point;

Thence west 8.5 feet to the east property line of said Lot 485;

Thence south along the east property line of said Lots 485 and 487 to the southeast corner of said Lot 487 also being the Point of Beginning.

Containing an area of 2,995.61 square feet or 0.07 acres more or less.

Note: The legal description above is based on county and municipal documents. It is not based on a boundary survey of the subject parcel.

EXHIBIT "B"
Depiction of Easement Area

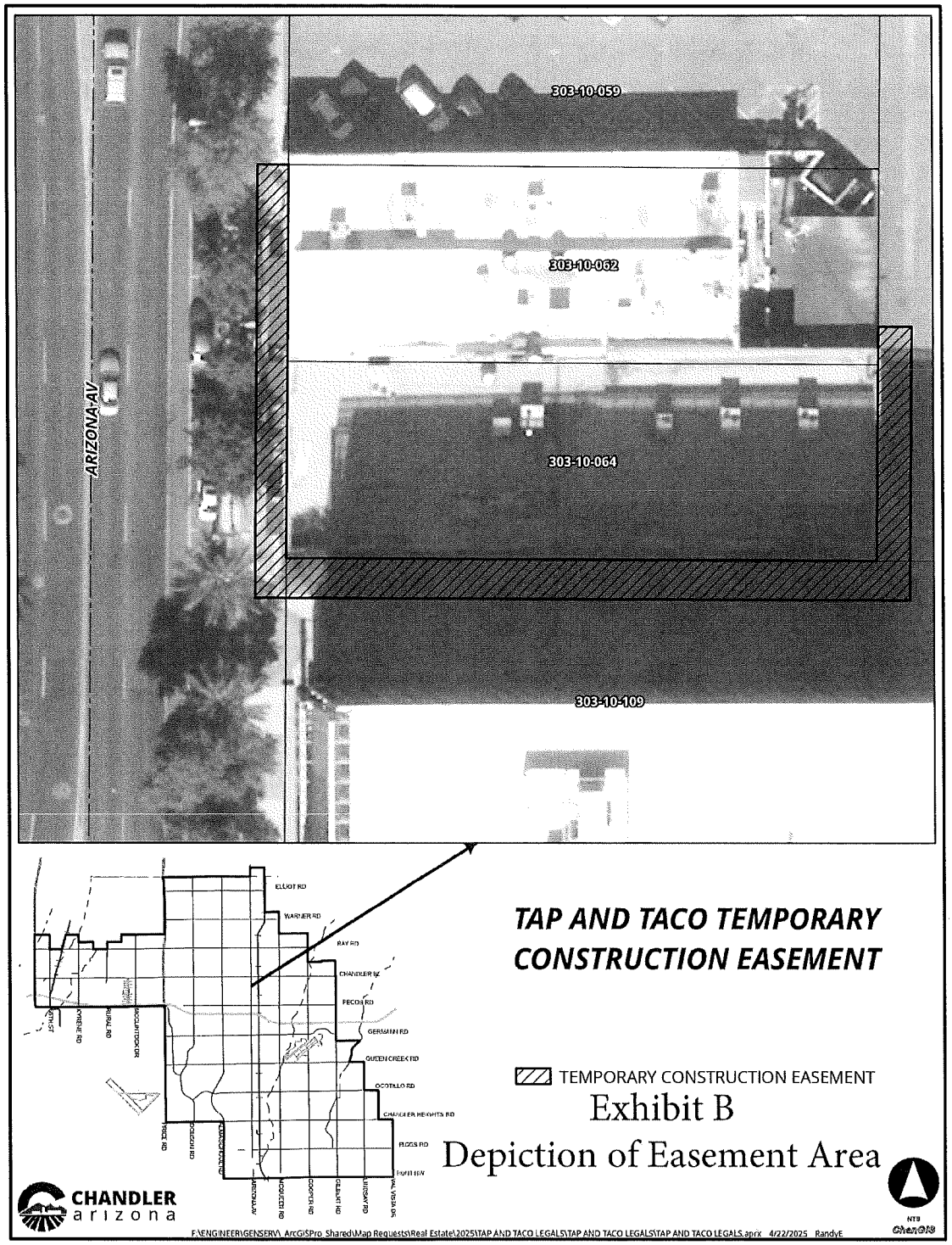

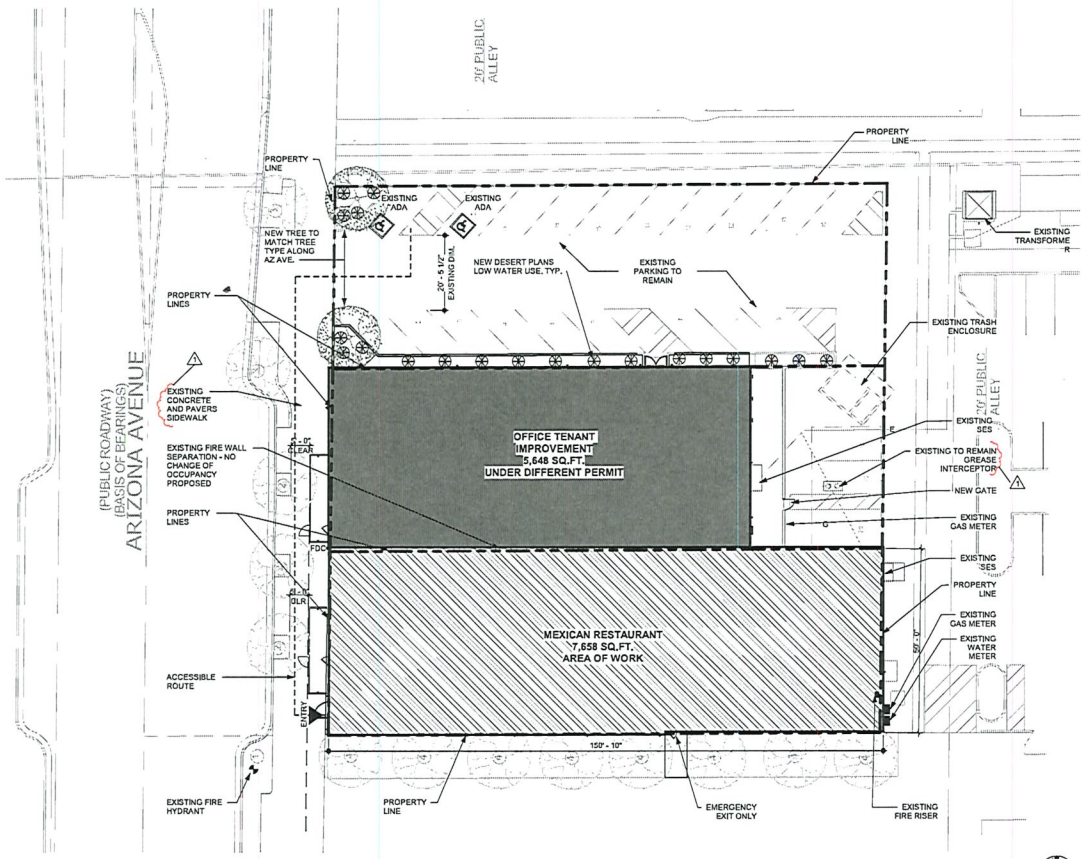

1 SITE PLAN
1/16" = 1'-0"

SITE PLAN GENERAL NOTES

1. CONTRACTOR SHALL VERIFY THE EXACT LOCATION OF ALL EXISTING UNDERGROUND UTILITIES PRIOR TO COMMENCING WITH THIS CONSTRUCTION.
2. CONTRACTOR SHALL VERIFY SITE CONDITIONS AS NECESSARY TO ASSURE CONFORMANCE WITH THE INTENT OF THESE DRAWINGS.
3. CONTRACTOR SHALL IMMEDIATELY INFORM THE ARCHITECT IN WRITING OF ANY DISCREPANCY BETWEEN THE SITE CONDITIONS AND THESE DOCUMENTS THAT WILL IMPACT COMPLIANCE WITH THESE DOCUMENTS.
4. LIGHT FIXTURES AT ALL EXTERIOR CANOPIES
5. G.C. TO PROVIDE BIRD ROOSTING AT EXTERIOR BUILDING AND CANOPIES.
6. BUILDING SIGNAGE TO BE PROVIDED BY G.C. ALL SIGN TO BE COORDINATED WITH OWNER.
7. ALL SIGNAGE SHALL BE A DEFERRED SUBMITTAL.
8. ADDRESS SIGNAGE TO COMPLY WITH IFC 2009 WITH LOCAL AMENDMENTS. COORDINATE WITH CITY OF CHANDLER AND FIRE

PARKING SPACE REQUIREMENT:

ACCORDING TO THE CODE OF THE CITY OF CHANDLER, ARIZONA
MINIMUM REQUIRED PARKING SPACES
ONE (1) SPACE/FIFTY (50) SQUARE FEET OF PUBLIC SERVING AREA
PLUS ONE (1) SPACE/TWO HUNDRED (200) SQUARE FEET OF PREPARATION AREA

PREPARATION AREA: TNT 3118 S.F. + STP976 S.F. = 4094 S.F.
SERVING AREA: TNT 5453 S.F. + STP 805 S.F. = 4802 S.F.
OFFICE: STP 3452 S.F.
(4094/200) + (4802/50) + (3452/250) = 21+ 98 + 14 = 133 SPACES

PARKING REQUIRED: 133 SPACES
EXISTING PARKING: 47 SPACES

PARKING WILL REMAIN UNCHANGED -NO OCCUPANCY CHANGE FROM PREVIOUS OWNER (NO SITE IMPROVEMENTS PROPOSED).

EXISTING STRIPED PARKING SPACES

REGULAR: 19
ACCESSIBLE: 2
TOTAL: 21

SITE INFORMATION

PARCEL #:	LOT SIZE:
303-10-058, LOT 483	7,500 SF, LOT 483
303-10-084, LOT 487	7,500 SF, LOT 487

ZONING:	SITE AREA:
LOT 483, D2	0.517 ACRES
LOT 487, C2	22,501 SQ. FEET

DEVELOPMENT NAME: TAB N TACO
AUTHORITY HAVING JURISDICTION (AHJ): CHANDLER, ARIZONA
EXISTING USE: RESTAURANT
PROPOSED USE: RESTAURANT
NUMBER OF STORIES: 1

LEGAL DESCRIPTION:
LOT 483: THIS IS A COMMERCIAL PARCEL LOCATED AT 121 S ARIZONA AVE CHANDLER, 85225, THE CURRENT OWNER IS S ARIZONA AVE LLC. IT IS LOCATED IN THE CHANDLER SUBDIVISION, AND MCR 534.

LOT 487: THIS IS A COMMERCIAL PARCEL LOCATED AT 121 S ARIZONA AVE CHANDLER, 85225, THE CURRENT OWNER IS S ARIZONA AVE LLC. IT IS LOCATED IN THE CHANDLER SUBDIVISION, AND MCR 534.

OWNER & MAILING ADDRESS:
S ARIZONA AVE LLC,
24621 S 122ND ST, CHANDLER, AZ 85249

EXISTING CONDITIONS

- BUILDING OVER WEST BOUNDARY LINE BY A MAXIMUM OF 0.85 FEET.
- BUILDING OVER EAST BOUNDARY LINE BY A MAXIMUM OF 0.91 FEET.

SCOPE OF WORK

THE INTERIOR RENOVATION OF THIS 7,658 SF TAP N TACO MEXICAN RESTAURANT AND BAR WILL FOCUS ON TRANSFORMING BOTH THE INTERIOR SUITE WORK AND EXTERIOR WORK OF THE ENTIRE BUILDING TO CREATE A CONTEMPORARY, DYNAMIC, AND INVITING DINING AND SOCIAL ENVIRONMENT. THE SPACE WILL BE RECREATED WITH A FRESH DESIGN THAT BALANCES STYLE, FUNCTIONALITY, AND OPERATIONAL EFFICIENCY. THE IMPROVEMENTS WILL CONSIST OF SIGNIFICANT UPDATES TO THE RESTAURANT'S DINING AREAS, BAR/LOUNGE, KITCHEN FACILITIES, AND RESTROOMS, AS WELL AS THE REPLACEMENT OF THE DETERIORATED SOUTH AND A SECTION OF THE WEST CMU WALL. ADDITIONALLY NEW OUTDOOR DINING SPACES ALONG ARIZONA AVE ARE PROPOSED.

VICINITY MAP

PROJECT SITE

Hue SERVICES

CHANDLER arizona

APPROVED
City of Chandler
Development Services
3/20/2025, 12:09 PM
BLD24-0544
Alan Ayers

3/21/2025, 9:32:54 PM
BLD24-0544
Corey Bush

TAP N TACO MEXICAN RESTAURANT
TENANT IMPROVEMENT

141 S Arizona Ave,
Chandler, AZ 85225

REGISTERED PROFESSIONAL ARCHITECT
28906
PHILIP A. CARHUFF
ARIZONA, U.S.A.
EXP. 3 / 31 / 2025

REVISIONS		
1	Date 1	Description 1

3/19/2025 9:55:48 PM

Phase: CONSTRUCTION DOCUMENT
Drawn By: AK
Reviewd By: Checker
HUE Project No: 1800
Date: 02/28/25
Sheet:

SP1.0
ARCHITECTURAL SITE PLAN

This drawing is the property of HUE Services, Chandler AZ, 85224, 480-510-2255. This drawing is limited to the original use for which it was prepared. Changes, reproductions, or assigning to any third party of this drawing for any other use is not permitted without written consent of HUE Services, LLC

TENANT IMPROVEMENT FOR: TAP N TACO MEXICAN RESTAURANT

CHANDLER, ARIZONA

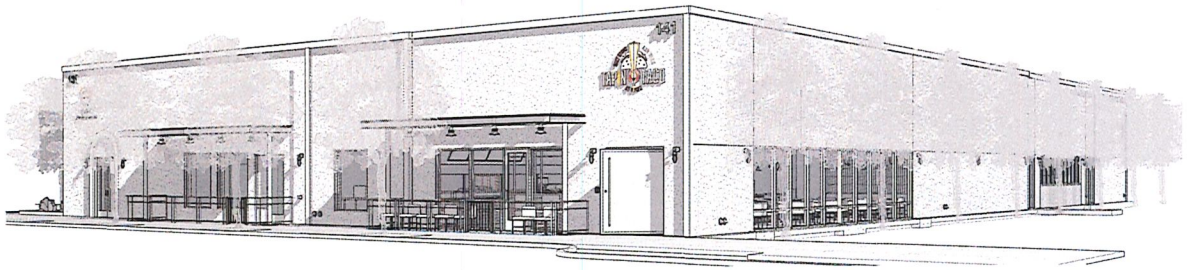

GOVERNING CODES

2021 INTERNATIONAL BUILDING CODE (WITH THE 2017 ICC A117.1 ACCESSIBILITY STANDARDS)
2021 INTERNATIONAL MECHANICAL CODE
2021 INTERNATIONAL PLUMBING CODE
2020 NATIONAL ELECTRICAL CODE
2021 INTERNATIONAL FIRE CODE
2021 INTERNATIONAL ENERGY CONSERVATION CODE
2021 INTERNATIONAL EXISTING BUILDING CODE

INCLUDING ALL CITY OF CHANDLER AMENDMENTS AND ORDINANCES

SPECIAL INSPECTIONS

POST INSTALLED ANCHORS (EPOXY ANCHORS/GROUTING).
MASONRY CONSTRUCTION
CONCRETE CONSTRUCTION

DEFERRED SUBMITTALS

STEEL OR WOOD JOISTS/GIRDERS
TRUSSES
SIGNAGE
FIRE PROTECTION
MANUFACTURED CANOPIES/AWNINGS
MANUFACTURED GUARDRAILS

PLANS AND SPECIFICATIONS FOR DEFERRED SUBMITTAL ITEMS SHALL BE SUBMITTED TO THE PLANNING & DEVELOPMENT DEPARTMENT AFTER BEING REVIEWED FOR CONFORMANCE WITH THE BUILDING OR STRUCTURE DESIGN BY THE REGISTERED DESIGN PROFESSIONAL IN RESPONSIBLE CHARGE AND SHALL HAVE PDD APPROVAL PRIOR TO ERECTION, CONSTRUCTION OR INSTALLATION IN THE FIELD. THE REGISTERED DESIGN PROFESSIONAL IN RESPONSIBLE CHARGE SHALL PROVIDE A NOTATION ON ALL DEFERRED DOCUMENTS THAT ACKNOWLEDGES REVIEW OF SUCH DOCUMENTS. A SEPARATE PERMIT FOR THE INSTALLATION OF A DEFERRED ITEM SHALL NOT BE REQUIRED UNLESS SPECIFIED IN THIS CODE.

PROJECT NARRATIVE

THE INTERIOR RENOVATION OF THIS 7,658 SF TAP N TACO MEXICAN RESTAURANT AND BAR WILL FOCUS ON TRANSFORMING BOTH THE INTERIOR SUITE WORK AND EXTERIOR WORK OF THE ENTIRE BUILDING TO CREATE A CONTEMPORARY, DYNAMIC, AND INVITING DINING AND SOCIAL ENVIRONMENT. THE SPACE WILL BE RECREATED WITH A FRESH DESIGN THAT BALANCES STYLE, FUNCTIONALITY, AND OPERATIONAL EFFICIENCY. THE IMPROVEMENTS WILL CONSIST OF SIGNIFICANT UPDATES TO THE RESTAURANT'S DINING AREAS, BAR/LOUNGE, KITCHEN FACILITIES, AND RESTROOMS, AS WELL AS THE REPLACEMENT OF THE DETERIORATED SOUTH AND A SECTION OF THE WEST CMU WALL. ADDITIONALLY NEW OUTDOOR DINING SPACES ALONG ARIZONA AVE ARE PROPOSED.

EXISTING PARKING FACILITIES

NOTE: TENANT SPACE IS SERVED BY EXISTING PARKING FACILITIES. THE PROPOSED TENANT IMPROVEMENT DOES NOT CONSTITUTE A CHANGE OF OCCUPANCY OR INTENSIFIED USE OF THE TENANT SPACE.

FIRE SPRINKLERS AND FIRE ALARMS

GENRAL CONTRACTOR PROCURE AND MANAGE FIRE PROTECTION ENGINEER

PROVIDE DESIGN, PERMITTED DOCUMENTS, AND SUBMITTALS

SPRINKLER HEADS TO BE CONCEALED TYPE. DESIGN LAYOUT TO ACCOUNT FOR AND BE WITHOUT CONFLICT OF FIXTURE LOCATIONS SHOWN ON MECHANICAL, PLUMBING, ELECTRICAL, AND INTERIOR DESIGN SHEETS

ONE SET OF STAMPED, APPROVED PLANS MUST BE MAINTAINED ON-SITE AND MADE AVAILABLE TO CITY INSPECTORS UPON DEMAND.CALCULATION BOOKLETS ARE TO BE KEPT WITH, AND MADE A PART OF THESE APPROVED PLANS. THESE ARE SUBJECT TO REVIEW BY THE FIRE INSPECTOR.
UNDERGROUND FIRE LINES MUST BE FLUSHED AND CLEANED. FLUSHING AND CLEANING OF THE LINES TO BE WITNESSED BY THE FIRE MARSHALL.

FIRE DEPARTMENT CONNECTION MUST HAVE CITY ADOPTED HOSE THREADS.

FIRE PROTECTION SYSTEMS SHALL BE INSTALLED OR MODIFIED BY A CONTRACTOR LICENSED TO PERFORM SUCH WORK BY THE STATE OF ARIZONA, AND WHO ALSO HOLDS A CURRENT VALID PERMIT FROM CITY OF PHOENIX FIRE DEPARTMENT TO CONDUCT SUCH WORK WITHIN CITY LIMITS.

AUTOMATIC SPRINKLER SYSTEMS SHALL BE SUPERVISED BY AN APPROVED CENTRAL, PROPRIETARY, OR REMOTE SIGNAL STATION SERVICE; OR AN AUDIBLE SIGNAL SHALL SOUND AT A CONSTANTLY ATTENDED LOCATION WHEN THE NUMBER OF SPRINKLER HEADS IS 100 OR MORE SPRINKLER HEADS.

FIRE DEPARTMENT VEHICLE ACCESS ROADWAYS SHALL BE PROVIDED AND MAINTAINED THROUGHOUT CONSTRUCTION.

REQUIRED WATER FIRE FLOW SHALL BE PROVIDED AND MAINTAINED THROUGHOUT CONSTRUCTION AND PRIOR TO ANY COMBUSTIBLES BEING

PROJECT DATA

BUILDING AND SITE BASICS:

PROJECT ADDRESS:	141 S. ARIZONA AVE, CHANDLER, AZ, 85225
ASSESSORS PARCEL #:	303-10-059, LOT 483 303-10-064, LOT 487
LOT AREA:	LOT 483 - 7,500 S.F., 0.172 ACRES LOT 487 - 7,500 S.F., 0.172 ACRES
BUILDING HEIGHT:	21' 6"
BUILDING AREA (FOOTPRINT):	9310 S.F.
BUILDING AREA UNDER-ROOF:	7735 S.F.

SITE INFORMATION:

ZONING:		LOT 483, D-2 LOT 487, C-2
LOT COVERAGE ALLOWED:		55%
SETBACKS:	FRONT	50'
	SIDE	0'
	REAR	0'
MAX HEIGHT:		30'
MAX DENSITY:		50/100

BUILDING CODE INFORMATION:

BUILDING OCCUPANCY(S):	A-2
OCCUPANT LOAD:	254
CONSTRUCTION TYPE:	V-B
STORIES:	1
MAXIMUM BUILDING AREA (TABULAR):	24,000 / ACTUAL 7,658
AREA SEPARATIONS REQUIRED:	EXISTING FIRE SEPARATION NO CHANGE OF OCCUPANCIES SEE SITE PLAN FOR LOCATION.
FIRE SPRINKLERS REQUIRED:	YES
FIRE SPRINKLERS PROVIDED:	YES
FIRE ALARM REQUIRED:	NO
FIRE ALARM PROVIDED:	NO
NUMBER OF EXITS REQUIRED:	2
NUMBER OF EXITS PROVIDED:	3

PROJECT TEAM

S ARIZONA AVE, LLC
4430 BEECHCRAFT PL
CHANDLER, AZ 85226
CONTACT: JOSHUA AND ANNA MARTINEZ
T: (602) 820-3755

DESIGN & MANAGEMENT:
HUE SERVICES
2900 W. MONTEREY PLACE
CHANDLER AZ 85224
CONTACT: TERE PORTILLO
T: 480.510.2255
E: tere@hue-services.com

MECHANICAL ENGINEER:COMPASS DESIGN GROUP
2038 N. GILBERT RD, STE 2-243
MESA, AZ 85203
CONTACT: RICHARD TOMS

PLUMBING ENGINEER: COMPASS DESIGN GROUP
2038 N. GILBERT RD. STE 2-243
MESA, AZ 85203
CONTACT: RICHARD TOMS

ELECTRICAL ENGINEER:COMPASS DESIGN GROUP
2038 N. GILBERT RD. STE 2-243
MESA, AZ 85203
CONTACT: RICHARD TOMS
T: 520-577-4560

ARCHITECT OF RECORD: CARHUFF + CUEVA ARCHITECTS, LLC
2930 N. SWAN ROAD, SUITE 210
TUCSON, ARIZONA 85712
CONTACT: PHILIP CARHUFF

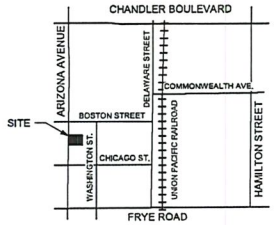

VICINITY MAP

SHEET INDEX

SHEET INDEX - ARCHITECTURAL	
G0.0	COVER SHEET
G1.0	LIFE SAFETY PLAN
G1.1	ARCHITECTURAL SPECIFICATIONS
G1.2	ARCHITECTURAL SPECIFICATIONS
G1.3	ARCHITECTURAL SPECIFICATIONS
G1.4	ARCHITECTURAL SPECIFICATIONS
G1.5	ARCHITECTURAL SPECIFICATIONS
G1.6	ARCHITECTURAL SPECIFICATIONS
G1.7	ARCHITECTURAL SPECIFICATIONS
G1.8	ARCHITECTURAL SPECIFICATIONS
G1.9	ARCHITECTURAL SPECIFICATIONS
G1.10	ARCHITECTURAL SPECIFICATIONS
G1.11	ARCHITECTURAL SPECIFICATIONS
G1.12	ARCHITECTURAL SPECIFICATIONS
G1.13	ARCHITECTURAL SPECIFICATIONS
G1.14	UL DETAILS
G1.15	UL DETAILS
D1.0	DEMOLITION PLANS
SP1.0	ARCHITECTURAL SITE PLAN
A0.0	ABBREVIATIONS, SYMBOLS & GENERAL NOTES
A1.0	WALL TYPES & COMCHECK
A1.1	PROPOSED FLOOR PLAN
A1.2	DIMENSION PLAN
A1.4	REFLECTED CEILING PLAN
A1.5	ROOF PLAN
A1.6	FINISH FLOOR PLAN
A2.0	EXTERIOR ELEVATIONS
A2.1	COLOR EXTERIOR ELEVATIONS
A3.0	BUILDING SECTIONS
A3.1	BUILDING SECTIONS
A3.2	BUILDING SECTIONS
A3.3	WALL SECTIONS
A3.4	WALL SECTIONS
A3.5	WALL SECTIONS
A4.1	ENLARGED RESTROOM PLANS & ELEVATIONS
A4.2	ENLARGED KITCHEN PLANS & ELEVATIONS
A4.3	ENLARGED KITCHEN PLANS & ELEVATIONS
A4.5	DOOR SCHEDULE & DETAILS
A4.6	DOOR DETAILS
A4.7	DOOR SPECS.
A4.8	WINDOW SCHEDULE AND DETAILS
A5.7	STOREFRONT ELEVATIONS & DETAILS
A7.0	ARCHITECTURAL DETAILS
A7.2	ACCESSIBILITY DETAILS
S0.1	GENERAL STRUCTURAL NOTES
S0.2	GENERAL STRUCTURAL NOTES
S0.3	TYPICAL DETAILS
S1.1	FOUNDATION PLAN
S2.1	ROOF FRAMING PLAN
S2.2	CMU LINTEL ELEVATIONS
S3.1	FOUNDATION PLAN
S4.1	FRAMING DETAILS
S4.2	FRAMING DETAILS
S4.3	FRAMING DETAILS
M0.0	MECHANICAL COVER SHEET
M0.1	MECHANICAL SPECIFICATIONS
M1.0	MECHANICAL PLANS
M1.1	MECHANICAL ROOF PLAN
M2.0	MECHANICAL DETAILS
M3.0	MECHANICAL SCHEDULE
P0.0	PLUMBING COVER SHEET
P0.1	PLUMBING SPECIFICATIONS
P1.0	PLUMBING PLAN
P1.0U	PLUMBING UNDERFLOOR PLAN
P2.0	PLUMBING RISER DIAGRAM
P3.0	PLUMBING DETAILS
P4.0	PLUMBING SCHEDULE & CALCULATIONS
E0.0	ELECTRICAL COVER SHEET
E0.1	ELECTRICAL NOTES
E0.2	ELECTRICAL NOTES
E1.1	ELECTRICAL SITE PLAN
E2.1	ELECTRICAL POWER PLAN
E2.2	ELECTRICAL LIGHTING PLAN
E2.3	ELECTRICAL ROOF PLAN
E2.4	ELECTRICAL ENLARGED PLANS
E3.0	ELECTRICAL DETAILS
E4.0	ELECTRICAL ONE-LINE DIAGRAM
E5.0	ELECTRICAL SCHEDULES
E5.1	ELECTRICAL SCHEDULES
E5.2	ELECTRICAL SCHEDULES
ED1.1	ELECTRICAL DEMOLITION PLAN

APPROVED
3/20/2025, 3:12:09 PM
BLD25-0544
Alan Ayers

3/31/2025, 4:32:54 PM
BLD25-0544
Corey Bush

TAP N TACO MEXICAN RESTAURANT
TENANT IMPROVEMENT
141 S Arizona Ave,
Chandler, AZ 85225

28908
PHILIP A. CARHUFF
EXP. 3 / 31 / 2025

REVISIONS

Project: CONSTRUCTI
DOCUME
Drawn By: TP -/
Reviewed By: P/
HUE Project No: 18
Date: 02/28/
Sh
G0.0
COVER SHEE

This drawing is the property of HUE Services, Chandler AZ, 85224, 480-510-2255. This drawing is limited to the original use for which it was prepared. Changes, reproductions, or assigning to any third party of this drawing for any other use is not permitted without written consent of HUE Servic

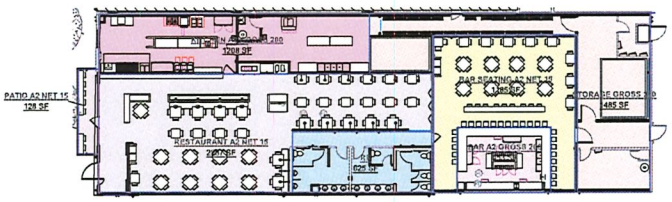

KITCHEN A2 GROSS200
STORAGE GROSS300
BAR SEATING A2 NET15
BAR A2 GROSS200
PATIO A2 NET15
RESTAURANT A2 NET15
RESTROOM - CORRIDORS
QUEUE LINE

② First Floor - Plumbing Occupancy
1/16" = 1'-0"

Area Schedule - (IBC Building Area - Plumbing Design Occupant)					
AREA CLASSIFICATION	AREA	LOAD FACTOR	OCCUPANCY	WC FACTOR M/W	REQ. WC M/F
KITCHEN A2 GROSS200	1208 SF	200 SF	6.038386	75	0.080525
STORAGE GROSS300	1485 SF	300 SF	4.94956	40	0.123739
BAR SEATING A2 NET15	1185 SF	15 SF	78.968264	40	1.974207
BAR A2 GROSS200	453 SF	200 SF	2.263125	40	0.056578
RESTAURANT A2 NET15	2287 SF	15 SF	152.455268	75	2.032737
PATIO A2 NET15	126 SF	15 SF	8.561545	75	0.114154
RESTROOM - CORRIDORS	625 SF				0
TOTAL			253.2 OCC.		4.38194

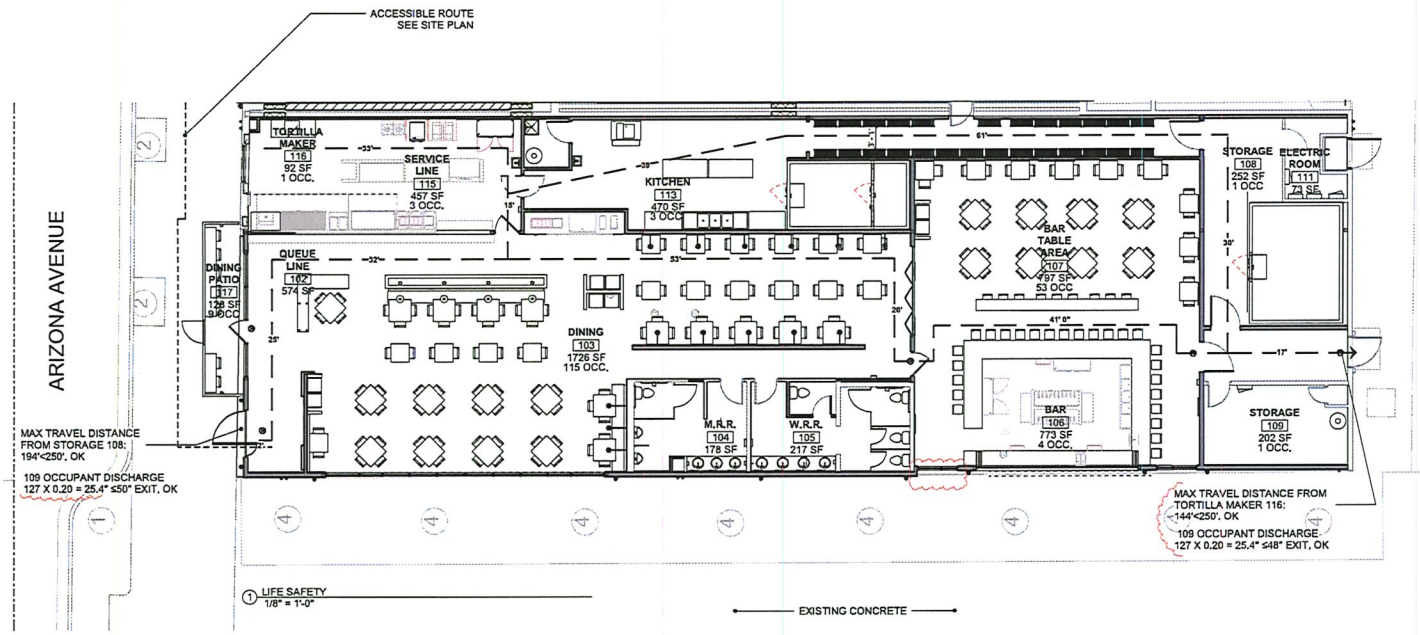

① LIFE SAFETY
1/8" = 1'-0"

LIFE SAFETY FLOOR PLAN GENERAL NOTES:

CONTRACTOR SHALL CONTACT AND COORDINATE WITH THE CITY FOR THE FOLLOWING: ALL NEW BUILDINGS SHALL HAVE APPROVED RADIO COVERAGE FOR EMERGENCY RESPONDERS WITHIN THE BUILDING BASED UPON THE EXISTING COVERAGE LEVELS OF THE PUBLIC SAFETY COMMUNICATION SYSTEMS OF THE JURISDICTION AT THE EXTERIOR OF THE BUILDING. A CONSTRUCTION PERMIT FOR THE INSTALLATION OF OR MODIFICATION TO EMERGENCY RESPONDER RADIO COVERAGE SYSTEMS AND RELATED EQUIPMENT IS REQUIRED AS SPECIFIED IN SECTION 105.7.12. PLEASE CONTACT FIRE PREVENTION AT 602-262-6771 FOR ADDITIONAL INFORMATION.

* DENOTES DOOR HAVING PANIC HARDWARE. SEE DOOR SCHEDULE ON SHEET A4.5.

EXCEPT AS SPECIFICALLY PERMITTED BY IBC SECTION 1010.2 DOOR OPERATIONS, EGRESS DOOR SHALL BE READILY OPERABLE FROM THE EGRESS SIDE WITHOUT THE USE OF A KEY OR SPECIAL KNOWLEDGE OR EFFORT.

EXIT REQUIREMENTS:

MAX. TRAVEL DISTANCE:	250'	(TABLE 1017.2)
MAX. DEAD END CORRIDOR LENGTH:	20'	(SECTION 1020.5)
EGRESS WIDTH (INCHES PER OCC.):	0.20"	(SECTION 1005.3.2 EXCEPTION #1)
MINIMUM CORRIDOR OR AISLE WIDTH:	44"	(SECTION 1020.3)
MINIMUM CLEAR OPENING EXIT DOOR:	32"	(SECTION 1010.1.1)
MINIMUM DOOR HEIGHT:	80"	(SECTION 1010.1.1)

REQUIRED NUMBER OF EXITS:

PER SECTION 1006.3.2
TOTAL OCCUPANTS: 254
REQUIRED NUMBER OF EXITS: 2
TOTAL NUMBER OF EXITS PROVIDED: 3

REQUIRED NUMBER OF ACCESSIBLE EXITS:

PER SECTION 1009.1
TOTAL OCCUPANTS: 254
REQUIRED NUMBER OF EXITS: 2
TOTAL NUMBER OF EXITS PROVIDED: 3

EXIT SIGNAGE NOTES:

ALL DOORS LEADING TO EGRESS STAIRWAYS, EXIT PASSAGEWAYS AND EXIT DISCHARGE POINTS, BOTH INTERIOR AND EXTERIOR, SHALL BE IDENTIFIED BY A SIGN COMPLYING WITH ICC/ANSI 117.1 2009, STATING: EXIT. TACTILE CHARACTERS ARE TO BE INCORPORATED. MOUNT SIGN AT 48" A.F.F. TO BASELINE OF LOWEST TACTILE CHARACTER.

⊗ ILLUMINATED EXIT SIGN
⊗ DIRECTIONAL ILLUMINATED EXIT SIGN

HUE SERVICES

APPROVED
3/20/2025 3:12:09 PM
BLD2-0944
Alan Ayers

CHANDLER arizona
3/21/2025 3:30:54 PM
BLD2-0944
Corey Bush

TAP N TACO MEXICAN RESTAURANT
TENANT IMPROVEMENT
141 S Arizona Ave.
Chandler, AZ 85225

REGISTERED PROFESSIONAL ENGINEER
28908
PHILIP A. CARHUFF
ELECTRICAL
ARIZONA U.S.A.
EXP. 3/31/2025

REVISIONS		
1	Date 1	Revision 1

3/21/2025 2:39:47 PM

Phase: CONSTRUCTION DOCUMENT
Drawn By: HS
Reviewed By: Checker
HUE Project No: 1800
Date: 02/28/25
Sheet:
G1.0
LIFE SAFETY PLAN

This drawing is the property of HUE Services, Chandler AZ, 85224, 480-510-2255. This drawing is limited to the original use for which it was prepared. Changes, reproductions, or assigning to any third party of this drawing for any other use is not permitted without written consent of HUE Services, LLC

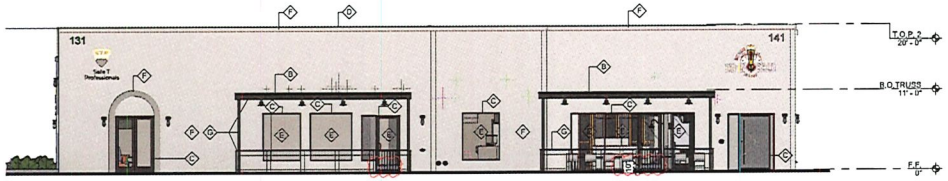

4 COLOR WEST ELEVATION
1/8" = 1'-0"

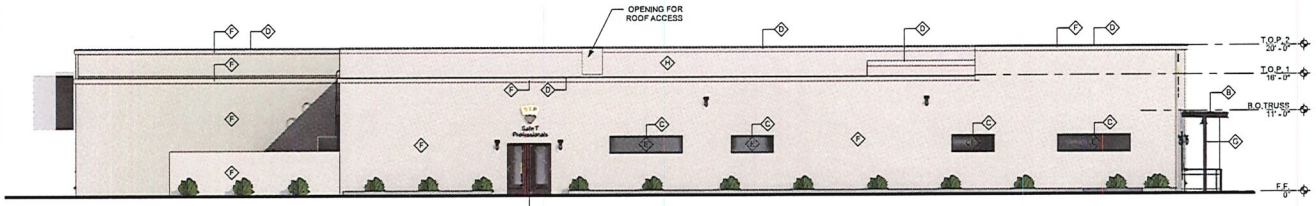

3 COLOR NORTH ELEVATION
1/8" = 1'-0"

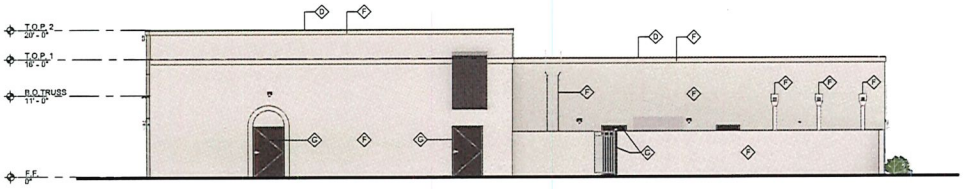

2 COLOR EAST ELEVATION
1/8" = 1'-0"

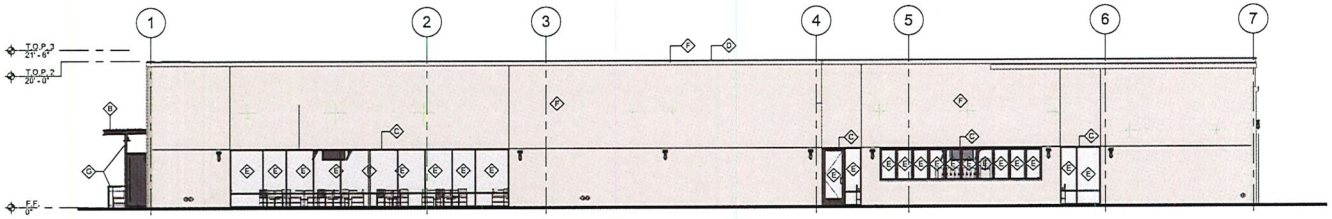

1 COLOR SOUTH ELEVATION
1/8" = 1'-0"

EXTERIOR FINISH LEGEND

A	DESCRIPTION MFR COLOR TYPE	BR1 - WHITE CLAY BRICK VENEER REMOVED
B	DESCRIPTION MFR COLOR TYPE	MT1 - CORRUGATED METAL PANEL WESTERN STATES METAL ROOFING BURNISHED SLATE 7/8" CORRUGATED METAL SHEETS
C	DESCRIPTION MFR COLOR	MT2 - ALUMINUM STOREFRONT ARCADIA DARK BRONZE
D	DESCRIPTION MFR COLOR	MT3 - METAL PARAPET CAP WESTERN STATES METAL ROOFING STONE WHITE - TO MATCH PLASTER WALL
E	DESCRIPTION MFR TYPE FINISH	GL1 - GLAZING VITRO SOLARBAN 70 CLEAR GLAS
F	DESCRIPTION MFR COLOR FINISH	PT1 - FIELD PAINT - PLASTER DUNN EDWARDS DE6372 - LACE VEIL MATTE/FLAT
G	DESCRIPTION MFR COLOR FINISH	PT2 - FIELD PAINT - FERROUS MATERIALS DUNN EDWARDS DEB006 - JAVA BRONZE SEMI-GLOSS
H	DESCRIPTION MFR COLOR	FM - FOAM ROOF SYSTEM HENRY ELASTOMETRIC TO MATCH EXTERIOR WALL COLOR

Hue SERVICES

CHANDLER ARIZONA

3/7/2025, 4:31:59 PM
BLD25-0944
Corey Bush

3/26/2025, 3:26:54 PM
BLD25-0944
Alan Ayers

TAP N TACO MEXICAN RESTAURANT
TENANT IMPROVEMENT

141 S Arizona Ave,
Chandler, AZ 85225

REGISTERED PROFESSIONAL ENGINEER
28968
PHILIP A. CARHUFF
ARIZONA U.S.A.
EXP. 3 / 31 / 2025

REVISIONS		
#	Date	Description

3/19/2025 9:57:37 PM

Phase: CONSTRUCTION DOCUMENT
Drawn By: Author
Reviewd By: Checker
HUE Project No: 1800
Date: 02/28/25
Sheet:
A2.1
COLOR EXTERIOR ELEVATIONS

This drawing is the property of HUE Services, Chandler AZ, 85224, 480-510-2255. This drawing is limited to the original use for which it was prepared. Changes, reproductions, or assigning to any third party of this drawing for any other use is not permited without written consent of HUE Services, LLC

City Council Memorandum **Economic Development** **Memo No.** ED26-006

Date: September 15, 2025

To: Mayor and Council

Thru: John M. Pombier, Acting City Manager
Micah Miranda, Economic Development Director

From: Chelsey Faggiano, Economic Development Project Manager

Subject: Resolution No. 5930 Approving an Intergovernmental Agreement Between the City of Chandler and the Chandler Unified School District No. 80, Kyrene School District No. 28, Mesa Unified School District No. 4 and Tempe Union School District No. 213, to Collaborate on a Young Families and Young Professionals Community Attraction Campaign; and Authorizing the Acceptance of Grant Funds from the Chandler Industrial Development Authority in the Amount of $150,000 as well as Grant Funds of $10,000 from Each of the Four School Districts to Pay for the Implementation and Launch of the Campaign; and Authorizing the City Manager to Sign and Execute all Documents, Contracts, or Agreements Necessary to Implement Campaign

---

Proposed Motion:

Move City Council pass and adopt Resolution No. 5930 approving an Intergovernmental Agreement between the City of Chandler and the Chandler Unified School District No. 80 (CUSD), Kyrene School District No. 28 (KSD), Mesa Unified School District No. 4 (MUSD) and Tempe Union School District No. 213 (TUHSD), to collaborate on a Young Families and Young Professionals Community Attraction Campaign; and authorizing the acceptance of grant funds from the Chandler Industrial Development Authority in the amount of $150,000 as well as one-time grant funds of $10,000 from each of the four school districts, totaling $40,000, to assist with creating and implementing this multi-year community attraction campaign;and authorizing the city manager to sign and execute all documents, contracts, or agreements necessary to implement campaign.

Background/Discussion:

Demographic concerns related to the City of Chandler were presented to the Council during the Study Session on August 12, 2024, which included a review of Chandler's population pyramid projections and a discussion of potential challenges. The discussion continued during a special retreat on April 29, 2025.

The Economic Development Division requests City Council approval to engage with the Chandler Unified School District No. 80 (CUSD), Kyrene School District No. 28 (KSD), Mesa Unified School District No. 4 (MUSD) and Tempe Union School District No. 213 (TUHSD), to launch a marketing campaign to attract young families and young professionals to Chandler. The goal is to proactively counteract demographic trends impacting our community, such as an aging population and low birth rate, which are not unique to Chandler but pose significant challenges for our city and schools. At a city level, slower growth and an aging population could affect future labor force availability, consumer spending, service expectations, and the sustainability of municipal revenue streams.

The campaign would promote the many benefits of living in Chandler, such as job growth/quality job opportunities, academic excellence, community safety, family-friendly recreation amenities, and the relative affordability of certain neighborhoods via short videos, social media posts, and digital/print paid media. The campaign strategy will align with key findings from the 20-year economic vitality report that is currently being developed in partnership with ASU's Seidman Research Institute and Thunderbird School of Global Management. It is expected that this campaign will span several years as it is focused on a challenge that cannot be fully addressed in the near term.

Financial Implications:

First year funding for the campaign will be provided by a $150,000 grant awarded by the Chandler Industrial Development Authority (CIDA). CIDA will pay the grant in Fiscal Year 2025-26 and will cover the expenses related to contracting a full-service marketing agency to plan and execute a multi-channel campaign targeting young families and young professionals. Invoices will be paid directly by CIDA upon transmittal from the Economic Development Division.

Additionally, each of the four school districts (CUSD, KSD, MUSD, TUHSD) have committed to contributing $10,000 each to this campaign effort. This is expected to be a multi-year campaign and future funding requests may be presented to the Mayor and Council for approval. If this agreement is approved, the city and partner school districts will begin working to review and issue a request for proposals to identify a qualified marketing agency to assist with the creation and

implementation of this campaign.

Attachments

Resolution 5930
Intergovernmental Agreement with Exhibit
CIDA Grant Approval Letter

RESOLUTION NO. 5930

A RESOLUTION OF THE CITY COUNCIL OF THE CITY OF CHANDLER, ARIZONA, APPROVING AN INTERGOVERNMENTAL AGREEMENT BETWEEN THE CITY OF CHANDLER AND THE CHANDLER UNIFIED SCHOOL DISTRICT NO. 80, KYRENE SCHOOL DISTRICT NO. 28, MESA UNIFIED SCHOOL DISTRICT NO. 4, AND TEMPE UNION SCHOOL DISTRICT NO. 213, TO COLLABORATE ON A YOUNG FAMILIES AND PROFESSIONALS COMMUNITY ATTRACTION CAMPAIGN.

WHEREAS, the City of Chandler wishes to partner with the Chandler Unified School District No. 80, Kyrene School District No. 28, Mesa Unified School District No. 4, and Tempe Union School District No. 213, to execute a young families and professionals community attraction campaign; and

WHEREAS, funding for the first year of the campaign has been secured through a $150,000 grant issued to the City of Chandler's Economic Development Division by the Chandler Industrial Development Authority; and

WHEREAS, the Districts have agreed to contribute $10,000 each toward this campaign; and

WHEREAS, the City shall select and contract with a marketing agency for the campaign, and the City and the Districts shall collaborate in planning the overall strategy and execution of the campaign.

NOW, THEREFORE, BE IT RESOLVED by the City Council of the City of Chandler, Arizona, as follows:

Section 1. Approving the intergovernmental agreement between the City of Chandler and the Districts in substantially the form attached as Exhibit "A".

Section 2. Authorizing the mayor to sign and execute the intergovernmental agreement on behalf of the City of Chandler.

Section 3. Authorizing the city manager to sign and execute all documents, contracts, or agreements necessary to implement the young families and professionals community attraction campaign under the terms of the intergovernmental agreement.

PASSED AND ADOPTED by the City Council of the City of Chandler, Arizona, this ____ day of _____, 2025.

ATTEST:

_____ _____

CITY CLERK MAYOR

CERTIFICATION

I HEREBY CERTIFY that the above and foregoing Resolution No. 5930 was duly passed and adopted by the City Council of the City of Chandler, Arizona, at a regular meeting held on the ____ day of _____, 2025 and that a quorum was present thereat.

_____
CITY CLERK

APPROVED AS TO FORM:

_____
CITY ATTORNEY gw

When recorded, return to:

City Clerk
City of Chandler
P. O. Box 4008, Mail Stop 606
Chandler, AZ 85244-4008

INTERGOVERNMENTAL AGREEMENT
BETWEEN THE CITY OF CHANDLER
AND
CHANDLER UNIFIED SCHOOL DISTRICT NO. 80, KYRENE SCHOOL DISTRICT NO. 28, MESA UNIFIED SCHOOL DISTRICT NO. 4, AND TEMPE UNION HIGH SCHOOL DISTRICT NO. 213

THIS INTERGOVERNMENTAL AGREEMENT ("Agreement") is entered into this _____ day of _____, 2025 ("**Effective Date**"), by and between the CITY OF CHANDLER, an Arizona municipal corporation ("**City**"), and CHANDLER UNIFIED SCHOOL DISTRICT NO. 80, a political subdivision of the State of Arizona located in Maricopa County ("**CUSD No. 80**"), KYRENE SCHOOL DISTRICT NO. 28, a political subdivision of the State of Arizona located in Maricopa County ("**KSD No. 28"**), MESA UNIFIED SCHOOL DISTRICT NO. 4, a political subdivision of the State of Arizona located in Maricopa County ("**MUSD No. 4**"), and TEMPE UNION HIGH SCHOOL DISTRICT NO. 213 ("**TUHSD No. 213**"), a political subdivision of the State of Arizona located in Maricopa County. City, CUSD No. 80, KSD No. 28, MUSD No. 4, and TUHSD No. 213 are referred to collectively in this Agreement as "Parties" and each may be referred to individually as a "Party." CUSD No. 80, KSD No. 28, MUSD No. 4 and TUHSD No. 213 also may be referred to collectively in this Agreement as "Districts."

RECITALS

A. Arizona Revised Statutes §§ 11-951 through 11-954 authorize City and Districts to enter into this Agreement.

B. The Chandler City Council has passed and adopted a resolution authorizing the Mayor of the City of Chandler to execute this Agreement on behalf of City.

C. Districts' governing boards have each authorized each District's Superintendent to execute this Agreement on behalf of their District.

D. Districts all border and serve residents of the City of Chandler.

E. Consistent with demographic trends such as an aging population and low birth rate, since 2010, City has seen the median age of its population increase and the percentage of residents under the age of 18 decrease. Districts have seen a corresponding decrease in student enrollment. These trends are not unique to Chandler but pose significant challenges for City and Districts.

F. City's Economic Development Division recently received a grant from the Industrial Development Authority for the City of Chandler, Arizona (the "**Chandler IDA**") to fund a multi-year marketing campaign designed to attract young families and professionals to Chandler (the "**Campaign**"). The Campaign will promote the many benefits of living, working, and raising a family in Chandler via short videos, social media posts, and digital/print paid media. The Campaign is described in more detail in the grant application attached to this Agreement as "**Exhibit A**". As part of the Campaign, City and Districts wish to collaborate to promote Districts' academic excellence and unique advantages.

NOW, THEREFORE, in consideration of the mutual promises and representations set forth in this Agreement, including without limitation the Recitals, City and Districts agree as follows.

AGREEMENT

1. To implement the Campaign, City shall issue a Request for Proposals for a creative, full-service marketing agency to develop and execute a comprehensive marketing plan that will aid in the attraction of young families and professionals to the community.

2. City shall select and contract with the marketing agency for the Campaign and shall direct the work of the marketing agency.

3. City shall collaborate with Districts and their leadership in planning overall strategy and execution of the Campaign.

4. Districts shall each contribute $10,000 toward the cost of implementing the Campaign. City shall fund the remainder of the total cost of the Campaign, estimated at $150,000.

5. On or after the Effective Date of this Agreement, City shall invoice each of the Districts in the amount of $10,000 immediately due and payable. Each District shall remit payment of its invoice within 30 days of issuance.

6. Term. This Agreement shall become effective upon its execution by all Parties. The term of this Agreement shall commence on the Effective Date and shall continue for the duration of the Campaign.

7. Notices. Unless otherwise specifically provided in this Agreement, or unless written notice of a change of address has been previously given under this Section 10, all notices, demands or other communication given hereunder shall be in writing and shall be deemed to have been duly delivered upon (A) personal delivery, (B) delivery by a recognized overnight courier (e.g., Federal Express, United Parcel Service) for next business day delivery, or (C) as of the fifth business day after mailing by United States certified mail, postage prepaid, addressed as follows:

To City:	Economic Development Director City of Chandler P. O. Box 4008 Mail Stop 416 Chandler, AZ 85244-4008 micah.miranda@chandleraz.gov
With a copy to:	Chandler City Attorney P.O. Box 4008 Mail Stop 602 Chandler, AZ 85244-4008 kelly.schwab@chandleraz.gov
To CUSD No. 80:	Chandler Unified School District #80 1525 West Frye Road Chandler, Arizona 85224 ATTN: Frank Narducci, Superintendent narducci.frank@cusd80.com Lana Berry, Chief Financial Officer berry.lana@cusd80.com
To KSD No. 28:	Kyrene School District #28 8700 S. Kyrene Rd. Tempe, AZ 85284 ATTN: Laura Toenjes, Superintendent ltoenjes@kyrene.org Chris Hermann, Chief Financial Officer chermann@kyrene.org
With a copy to:	Kyrene School District #28 8700 S. Kyrene Rd. Tempe, AZ 85284 ATTN: Jordan Ellel, Legal Counsel jellel@kyrene.org
To MUSD No. 4:	Mesa Unified School District No. 4 63 E. Main St. #101 Mesa, AZ 85201-7422 ATTN: Matthew Strom, Superintendent mdstrom@mpsaz.org
To TUHSD No. 213:	Tempe Union High School District No. 213 500 W. Guadalupe Rd. Tempe, AZ 85283 ATTN: Stacia Wilson, Superintendent swilson@tuhsd.k12.az.us Megan Sterling, Chief of Staff and

Strategic Partnerships
msterling@tuhsd.k12.az.us

With a copy to: Tempe Union High School District No. 213
500 W. Guadalupe Rd.
Tempe, AZ 85283
ATTN: Jordan Ellel, Legal Counsel
jellel@tuhsd.k12.az.us

Email addresses are provided for purposes of convenience only; delivery via electronic mail is not sufficient notice under this Agreement.

8. Disputes. Arizona law shall govern this Agreement and any dispute arising out of this Agreement.

8.1 City and Districts agree that they will attempt to resolve any dispute through nonbinding mediation before a mediator selected jointly by them. In the event that City and Districts cannot agree upon the selection of a mediator, they may request that the presiding judge of the Maricopa County Superior Court appoint a mediator. The cost of any such mediation shall be divided equally between the Parties. The mediator shall not have the right to award punitive damages. The results of the mediation shall be nonbinding, and any Party shall have the right to pursue all legal and equitable remedies available to it 30 days after conclusion of the mediation, subject to any extensions agreed to by the Parties in writing.

8.2 The Parties agree that the statute of limitations applicable to any litigation commenced under this Agreement shall be tolled during the period beginning with a request by either Party for mediation until 30 days after the conclusion of the mediation (or the Party's refusal to participate in mediation), subject to any extensions agreed to by the Parties in writing.

9. Assignment. The obligations under this Agreement are not assignable by any Party.

10. Additional Matters.

10.1 This Agreement shall be governed by and construed under the laws of the State of Arizona. This Agreement is subject to the provisions of A.R.S. § 38-511. This Agreement shall be deemed made and entered into in Maricopa County, Arizona.

10.2 City and Districts each believe that the execution, delivery and performance of this Agreement are in compliance with all applicable laws. However, in the unlikely event that any provision of this Agreement is declared void or unenforceable (or is construed as requiring City to do any act in violation of any applicable constitutional provision, law, regulation, code, or charter), such provision shall be deemed severed from this Agreement and this Agreement shall otherwise remain in full force and effect; provided that this Agreement shall retroactively be deemed reformed to the extent reasonably possible in such a manner so that the reformed Agreement (and any related agreements effective as of the same date) provide essentially the same rights and benefits (economic and otherwise) to the Parties as if such severance and reformation were not required. The Parties further agree, in such circumstances, to perform all such acts as

reasonably requested by the other Party from time to time and to execute all amendments, instruments, and consents necessary to accomplish and to give effect to the purposes of this Agreement, as reformed.

10.3 The failure of any Party to exercise any right, power, or remedy given to it under this Agreement, or to insist upon strict compliance with it, shall not constitute a waiver of the terms and conditions of this Agreement with respect to any other or subsequent breach, nor a waiver by either Party of its rights at any time to require exact and strict compliance with all of the terms of this Agreement.

10.4 This Agreement constitutes the entire Agreement between City and Districts with respect to its subject matter, and all agreements, oral or written, entered into prior to this Agreement are revoked and superseded by this Agreement. This Agreement may not be changed, modified, or amended, except in writing, signed by all Parties, and any attempt at oral modification of this Agreement shall be void and of no effect. This Agreement may be executed in any number of counterparts, each of which shall be deemed an original, and all of which, when taken together, shall constitute one and the same instrument.

10.5 In the event of any dispute between the Parties in connection with this Agreement, the Party prevailing in such action or proceeding (excluding mediation) shall be entitled to recover from the other Party all of its costs and fees, including reasonable attorneys' fees; provided, however, that no such awarded amount shall be payable until: (A) the court in question has made a finding that one or the other Party is the "prevailing party" in such proceeding, and (B) a final order of judgment is entered by a court of competent jurisdiction for which any time for appeal has expired without appeal, or where applicable, the mandate of an appellate court of competent jurisdiction shall issue.

10.6 Any action brought to interpret, enforce, or construe any provision of this Agreement shall be commenced and maintained in the Superior Court of the State of Arizona in and for the County of Maricopa (or, as may be appropriate, in the Justice Courts of Maricopa County, Arizona, or in the United States District Court for the District of Arizona, if, but only if, the Superior Court lacks or declines jurisdiction over such action). The Parties irrevocably consent to jurisdiction and venue in such courts for such purposes and agree not to seek transfer or removal of any action except in accordance with the terms of this Section 10.6.

10.7 It is not intended by this Agreement to, and nothing contained in this Agreement shall, create any partnership, joint venture or other arrangement between City and District. No term or provision of this Agreement is intended to, or shall, be for the benefit of any person, firm, organization, or corporation not a Party hereto, and no such other person, firm, organization, or corporation shall have any right or cause of action hereunder.

10.8 Attached to this Agreement and incorporated by reference is the written determination of each Party's legal counsel that each Party is authorized under the laws of the State of Arizona to enter into this Agreement and that the Agreement is in proper form.

IN WITNESS WHEREOF, the Parties have executed this Agreement on the date indicated.

DATED: _____, 2025.

CITY OF CHANDLER, an Arizona municipal corporation

_____
Kevin Hartke, Mayor

ATTEST:

_____
City Clerk

APPROVAL OF THE CHANDLER CITY ATTORNEY

Pursuant to Arizona Revised Statutes § 11-951 through § 11-954, I have reviewed the foregoing intergovernmental agreement between Chandler Unified School District No. 80 and the City of Chandler, and declare this Agreement to be in proper form and within the powers and authority granted to the City under the laws of the State of Arizona.

No opinion is expressed as to the authority of the Districts to enter into this Agreement.

DATED this _____ day of _____, 2025.

_____
Kelly Y. Schwab
Chandler City Attorney

DATED: _____, 2025.

CHANDLER UNIFIED SCHOOL DISTRICT NO. 80

_____
Frank Narducci, Superintendent

ATTEST:

_____
Clerk of the Board

APPROVAL OF CHANDLER UNIFIED SCHOOL DISTRICT COUNSEL

Pursuant to Arizona Revised Statutes § 11-951 through § 11-954, I have reviewed the foregoing intergovernmental agreement between Chandler Unified School District No. 80 and the City of Chandler, and declare this Agreement to be in proper form and within the powers and authority granted to the District under the laws of the State of Arizona.

No opinion is expressed as to the authority of the City or any other District to enter into this Agreement.

DATED this _____ day of _____, 2025.

_____
Print Name: _____
Counsel for the District

DATED: _____, 2025.

KYRENE SCHOOL DISTRICT NO. 28

_____
Laura Toenjes, Superintendent

ATTEST:

_____
Clerk of the Board

APPROVAL OF KYRENE SCHOOL DISTRICT COUNSEL

Pursuant to Arizona Revised Statutes § 11-951 through § 11-954, I have reviewed the foregoing intergovernmental agreement between Kyrene School District No. 28 and the City of Chandler, and declare this Agreement to be in proper form and within the powers and authority granted to the District under the laws of the State of Arizona.

No opinion is expressed as to the authority of the City or any other District to enter into this Agreement.

DATED this _____ day of _____, 2025.

_____
Print Name: _Jordan Ellel_____
Counsel for the District

DATED: _____, 2025.

MESA UNIFIED SCHOOL DISTRICT NO. 4

_____
Matthew Strom, Superintendent

ATTEST:

_____
Clerk of the Board

APPROVAL OF MESA UNIFIED SCHOOL DISTRICT COUNSEL

Pursuant to Arizona Revised Statutes § 11-951 through § 11-954, I have reviewed the foregoing intergovernmental agreement between Chandler Unified School District No. 80 and the City of Chandler, and declare this Agreement to be in proper form and within the powers and authority granted to the District under the laws of the State of Arizona.

No opinion is expressed as to the authority of the City or any other District to enter into this Agreement.

DATED this _____ day of _____, 2025.

_____
Print Name: _____
Counsel for the District

DATED: _____, 2025.

TEMPE UNION HIGH SCHOOL DISTRICT NO. 213

_____
Stacia Wilson, Superintendent

ATTEST:

_____
Clerk of the Board

APPROVAL OF TEMPE UNION HIGH SCHOOL DISTRICT COUNSEL

Pursuant to Arizona Revised Statutes § 11-951 through § 11-954, I have reviewed the foregoing intergovernmental agreement between Chandler Unified School District No. 80 and the City of Chandler, and declare this Agreement to be in proper form and within the powers and authority granted to the District under the laws of the State of Arizona.

No opinion is expressed as to the authority of the City or any other District to enter into this Agreement.

DATED this _____ day of _____, 2025.

_____
Print Name: _Jordan Ellel_____
Counsel for the District

EXHIBIT A

Chandler IDA Grant Application

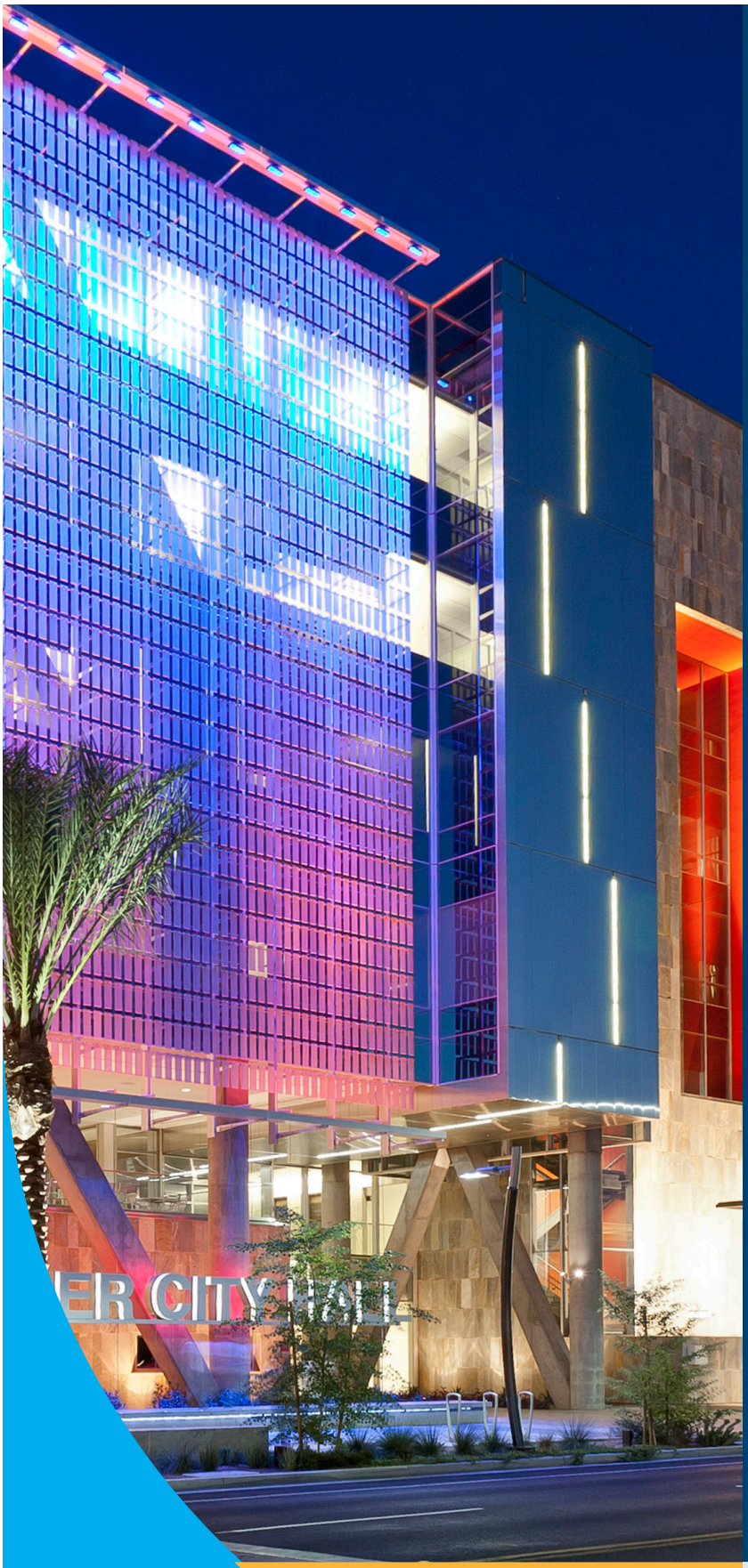

IDA Grant Application

Marketing Campaign to Attract Young Families and Professionals to Chandler

SUBMITTED TO:
CHANDLER IDA BOARD

APPLICANT:
CITY OF CHANDLER
ECONOMIC DEVELOPMENT

CHANDLER
arizona

Project
Community Attraction Campaign

The City of Chandler's Economic Development Division is requesting $150,000 in grant funding to launch a marketing campaign to attract young families and professionals to Chandler. The goal is to proactively counteract demographic trends impacting our community, such as an aging population and low birth rate. These trends are not unique to Chandler but pose significant challenges for our city and schools.

These trends in tandem with Chandler running out of land for additional residential development have already contributed to declining school enrollment and the need to discuss the possibility of school closures. On a city level, slower growth and an aging population could affect future labor force availability, consumer spending, service expectations, and sustainability of municipal revenue streams.

Chandler Unified School District Enrollment Projection

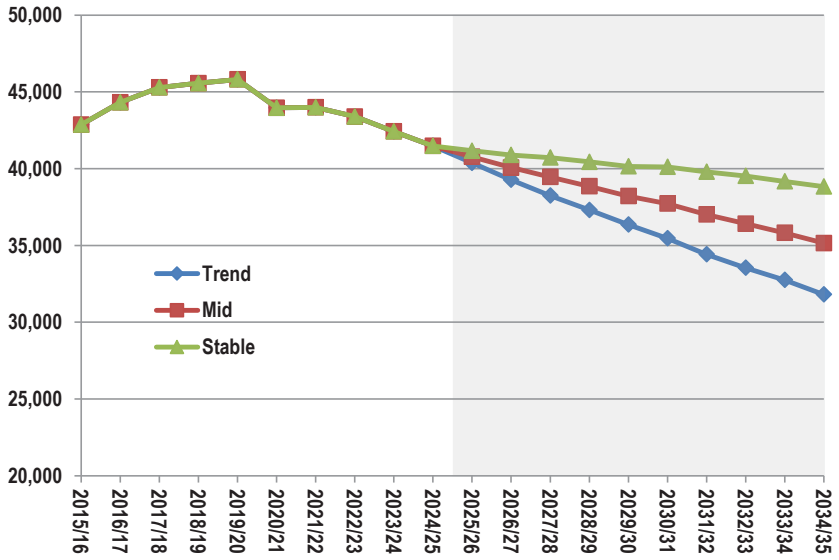

Source: Applied Economics, 2024. Presented at Oct. 23, 2024 CUSD Governing Board Meeting.

The Economic Development Division wishes to contract with a full-service marketing agency to plan and execute a multi-channel campaign that would target young families and professionals. The campaign would promote the many benefits of living in Chandler via short videos, social media posts, and digital/print paid media. This project would involve collaboration with school districts serving Chandler to promote their academic excellence and unique advantages. Other advantages of Chandler to be promoted include job growth/quality job opportunities, community safety, family-friendly recreation amenities, and the relative affordability of certain neighborhoods.

By approving this grant request, the Chandler IDA Board can play an important role in positioning our city and schools for continued success.

Project Team

The Economic Development Division will manage the project and work performed by the selected marketing agency. The chosen agency will serve as the lead in planning overall campaign strategy and execution, which will also be done in collaboration with Chandler Unified School District, Mesa Public Schools and Kyrene Elementary School District leadership.

The Economic Development Division views this project as an opportunity to further engage with our education stakeholders and strengthen partnerships with the schools that serve our city.

Project Timeline

Upon notification of Chandler IDA grant funding approval, the city will work to issue a request for proposal to identify a qualified marketing agency to help strategize and execute this campaign.

Once an agency is selected, we anticipate it will take two to three months to perform market research and develop a draft campaign strategy with supporting story board concepts for approval by city management and key project stakeholders. Once approved, initial asset production would begin. A tentative project timeline is provided below.

The success of this campaign would be evaluated throughout the year and the Economic Development Division would report on traction gained. It is expected the campaign would span several years as it is focused on a challenge that cannot be fully addressed in the near-term.

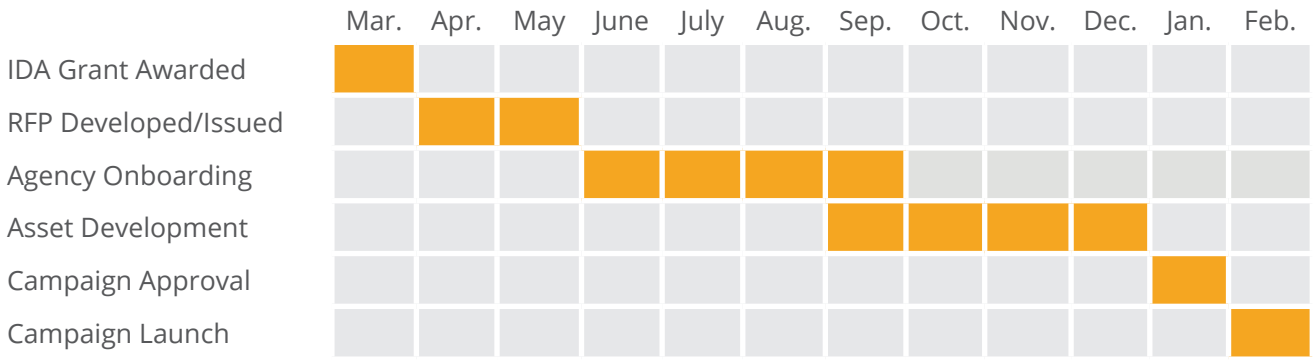

Funding Breakdown

The City of Chandler's Economic Development Division is requesting $150,000 in grant funding from the Chandler IDA Board, which would be used for video production and ad buys. Chandler Unified School District, Mesa Public Schools, and Kyrene Elementary School District have each committed to contributing $10,000 toward the marketing campaign.

IDA grant funding is only being sought for the initial year to kick off the project.

	Video and Campaign Asset Production	Digital Ad Buys	Total
Funding Requested	$100,000	$50,000	$150,000

Questions?

We appreciate the Chandler IDA Board's review and consideration of this grant application.

We believe this campaign will have a positive impact on our community's economic growth and efforts to ensure continued prosperity.

Micah Miranda
ECONOMIC DEVELOPMENT DIRECTOR

Chelsey Faggiano
ECONOMIC DEVELOPMENT PROJECT MANAGER

CHANDLER
arizona
Community of Innovation

April 8, 2025

Micah Miranda
Economic Development Director and
Chelsey Faggiano
Economic Development Project Manager
City of Chandler
175 S. Arizona Ave.
Chandler, Arizona 85225

Subject: 2025 Marketing Campaign to Attract Young Families and Professionals Grant

Dear Mr. Miranda and Ms. Faggiano:

Thank you for the submittal of the proposal and grant request presented at the March 11, 2025, Industrial Development Authority (IDA) meeting. The IDA approved the grant request in the amount of $150,000 that will fund video production and ad-buys as part of a marketing campaign that will target young families and professionals. This campaign will promote the many benefits of living in Chandler, with a focus on education, job growth and career opportunities, community safety, family-friendly recreation amenities and relative neighborhood affordability.

The IDA will pay the grant in Fiscal Year 2025-26 and will cover $100,000 to fund video and campaign asset production and $50,000 in funding for digital ad buys. Upon receipt of invoices, please forward them to the IDA for payment. Quarterly progress reports to the IDA will be used to monitor the program success and should begin no later than July 2025.

If you have any questions regarding this letter, please contact Dawn Lang, City of Chandler, Deputy City Manager|CFO at (480) 782-2255 or dawn.lang@chandleraz.gov.

Sincerely,

FOR Charles Ertl, President
Chandler Industrial Development Authority

City Council Memorandum Economic Development Memo No. N/A

Date: September 15, 2025
To: Mayor and Council
Thru: John M. Pombier, Acting City Manager
Micah Miranda, Economic Development Director
From: Kimberly Janes, Economic Development Senior Program Manager
Subject: Agreement No. ED3-920-4587, Amendment No. 3, for Search Engine Optimization and Pay Per Click Services.

Proposed Motion:

Move City Council approve Agreement No. ED3-920-4587, Amendment No. 3, with Granicus, Inc., for search engine optimization and pay per click services, in an amount not to exceed $112,830, for the period of one year, beginning July 1, 2025, through June 30, 2026.

Background/Discussion:

The Proposition 302 Maricopa County Grant program (Prop 302) is available to designated destination marketing organizations within Maricopa County and is administered by the Arizona Office of Tourism. This grant program provides funding for new and expanded tourism marketing activities, including advertising, website development, public relations, and travel industry marketing, that promote the community as a travel destination. The City of Chandler has utilized Prop 302 to fund the development, maintenance, and support of the city's tourism website, www.VisitChandler.com, since 2003.

The responsive website features essential Chandler tourism information, including, but not limited to, hotel accommodations, attractions, a calendar of events, and a dining guide. It is a key marketing tool for reaching potential visitors as well as meeting and event planners. VisitChandler.com is featured in all promotional materials and advertisements and is also used to measure the success of marketing campaigns and general promotions. For the Fiscal Year (FY) 2024-2025, the tourism website generated more than 494,000 sessions,

representing a 1.9% increase in traffic compared to the same period in FY 2023-2024.

Pay-per-click (PPC) ads are strategically placed website advertisements that appear at the top of natural search engine results for specific keywords and phrases. PPC is typically a strong marketing strategy for ranking highly competitive keywords and phrases with immediate results. Search Engine Optimization (SEO) is an organic method of increasing the likelihood of a website being found by a user when searching for a keyword or phrase through a search engine, thereby connecting the user with the content they are seeking. SEO is a strong, long-term strategy that requires a continual investment of time but provides lasting website growth.

In recent years, PPC advertising costs have consistently increased due to rising costs associated with the growing demand for coveted placement, as more advertisers compete for the same traffic. For FY 2025-2026, the PPC media spend will be paid directly to Google Inc. and will remain flat at last year's media spend of $57,600 for the fiscal year.

Evaluation:

On July 6, 2023, City Council approved an agreement with Simpleview Worldwide, Inc., for search engine optimization and pay per click services, for a one-year period, with the option of up to four one-year extensions. In September 2024, Granicus, Inc. purchased Simpleview Worldwide, Inc., and Amendment No. 2 assigning the agreement to Granicus, Inc. was executed administratively. Staff recommends this extension of the agreement.

Financial Implications:

Funding for this agreement was included as a planned expenditure in the FY 2025-2026 Proposition 302 Maricopa County Grant marketing plan.

Fiscal Impact

Account No.	Fund Name	Program Name	Dollar Amount	CIP Funded Y/N
217.1580.5219.0.3ED001.0	Grants	Prop 302 Tourism Grant	$112,830	N

Attachments

ED3-920-4587 Amendment 3

Docusign Envelope ID: 08DBB892-E88E-40AB-AB3E-B7004B1958A5

City Clerk Document No. _____

City Council Meeting Date: September 18, 2025

AMENDMENT TO CITY OF CHANDLER AGREEMENT
SEARCH ENGINE OPIMIZATION AND PAY PER CLICK SERVICES
CITY OF CHANDLER AGREEMENT NO. ED3-920-4587

THIS AMENDMENT NO. 3 (Amendment No. 3) is made and entered into by and between the City of Chandler, an Arizona municipal corporation (City), and Granicus, Inc. (Contractor), (City and Contractor may individually be referred to as Party and collectively referred to as Parties) and made _____ , 2025 (Effective Date).

RECITALS

WHEREAS, the Parties entered into an agreement for search engine optimization and pay per click services (Agreement); and

WHEREAS, the term of the Agreement was July 1, 2023, through June 30, 2024, with the option of up to four one-year extensions; and

WHEREAS, the Parties agreed to the assignment of the Agreement from Simpleview Worldwide, Inc. to Granicus, Inc. through Amendment No. 2; and

WHEREAS, the Parties wish to exercise the second option through this Amendment to extend the Agreement for one year.

AGREEMENT

NOW THEREFORE, the Parties agree as follows:

1. The recitals are accurate and are incorporated and made a part of the Agreement by this reference.

2. Section III is amended to read as follows: The Agreement is extended for a one-year period July 1, 2025, through June 30, 2026.

3. Section IV, Price is amended to read as follows: The City will pay the Contractor the per unit cost

Docusign Envelope ID: 08DBB892-E88E-40AB-AB3E-B7004B1958A5

set forth in Revised Exhibit B of the original Agreement, attached to and made a part of this Amendment No. 3. Total payments made to the Contractor during the term of this Amendment No. 3 will not exceed $112,830.

4. All other terms and conditions of the Agreement remain unchanged and in full force and effect. If a conflict or ambiguity arises between this Amendment No. 3 and the Agreement, the terms and conditions in this Amendment No. 3 prevail and control.

IN WITNESS WHEREOF, the Parties have entered into this Amendment on the Effective Date.

FOR THE CITY	**FOR THE CONTRACTOR**
By: _____	By: Jessica Yang _____
Its: Mayor	Its: _____

APPROVED AS TO FORM:

By: _____
City Attorney JMB

ATTEST:

By: _____
City Clerk

Docusign Envelope ID: 08DBB892-E88E-40AB-AB3E-B7004B1958A5

REVISED EXHIBIT B
COMPENSATION AND FEES

Fees are inclusive of all costs associated with the Scope of Services.

Section 1: Search Engine Optimization (SEO) Engagement	
Engagement Tier - Premium	$3,762.50 per month
Content Planning Consultation, Meta Tag Optimization, Duplicate Content Check, Enhanced Structured Data (SCHEMA), Quarterly Campaign-focused Keyword Research & Analysis, Annual Competitive Analysis Report, Quarterly CRO (up to two), CRO design work	Included
Content Creation: Up to (ONE) 1,000-Word Content (1 Image) Quarterly and (TWO) 500-Word Content (2 Images) Monthly	Included
Reporting: Monthly Standard Reporting, Annual Year-end Summary, and 1-Page Enhanced Monthly Analytics Reporting – Custom Report Pages	Included
Section 2: Pay Per Click	
PPC Media, paid directly to Google	$4,800 per month
PPC Management & Reporting	$900.00 per month
Section 3: Total Annual Cost	
	$112,830 per year
Section 4: Hourly Rates Staff roles and hourly rates for services in addition to the Scope.	
Majo Badilla, Paid Media Analyst	$125 per hour
Rachel Krause, SEO Analyst	$125 per hour

Certificate Of Completion

Envelope Id: 08DBB892-E88E-40AB-AB3E-B7004B1958A5
Status: Sent
Subject: Complete with Docusign: 4587 Amendment 3.pdf
EDMS Application: CC-AGRMTS
Source Envelope:
Document Pages: 3
Signatures: 1
Certificate Pages: 5
Initials: 0
AutoNav: Enabled
EnvelopeId Stamping: Enabled
Time Zone: (UTC-07:00) Arizona

Envelope Originator:
Christina Pryor
PO Box 4008
Chandler, 85244
Christina.Pryor@chandleraz.gov
IP Address: 198.241.2.1

Record Tracking

Status: Original
8/21/2025 | 10:25 AM
Security Appliance Status: Connected
Storage Appliance Status: Connected

Holder: Christina Pryor
Christina.Pryor@chandleraz.gov
Pool: StateLocal
Pool: City of Chandler

Location: DocuSign
Location: Docusign

Signer Events	Signature	Timestamp
Jessica Yang jessica.yang@granicus.com Manager of Business and Contracts Security Level: Email, Account Authentication (None) **Electronic Record and Signature Disclosure:** Accepted: 8/21/2025 | 10:33 AM ID: 42d9711f-cdce-4baa-ba5a-5f70c60fa5c6	Jessica Yang Signature Adoption: Pre-selected Style Using IP Address: 163.116.133.159	Sent: 8/21/2025 | 10:32 AM Viewed: 8/21/2025 | 10:33 AM Signed: 8/21/2025 | 10:33 AM
Records Division Signing Group: Records Division Security Level: Email, Account Authentication (None) **Electronic Record and Signature Disclosure:** Not Offered via Docusign		
Daniel Brown Daniel.Brown@chandleraz.gov Security Level: Email, Account Authentication (None) **Electronic Record and Signature Disclosure:** Accepted: 7/1/2021 | 08:17 AM ID: 563d172a-e614-4b9b-b2a1-61a0afc8280a		
Kevin Hartke kevin.hartke@chandleraz.gov Security Level: Email, Account Authentication (None) **Electronic Record and Signature Disclosure:** Accepted: 6/28/2021 | 11:17 AM ID: 2531f230-027c-41f7-9166-1189df6a8c8f		
Dana DeLong Dana.DeLong@chandleraz.gov Security Level: Email, Account Authentication (None) **Electronic Record and Signature Disclosure:**		

Signer Events	Signature	Timestamp
Accepted: 6/28/2021 | 01:03 PM ID: e796186e-c533-4a41-978c-34d69e29778a		

In Person Signer Events	Signature	Timestamp

Editor Delivery Events	Status	Timestamp
Records Division		Sent: 8/21/2025 | 10:33 AM

Signing Group: Records Division

Security Level: Email, Account Authentication (None)

Electronic Record and Signature Disclosure:
Not Offered via Docusign

Agent Delivery Events	Status	Timestamp

Intermediary Delivery Events	Status	Timestamp

Certified Delivery Events	Status	Timestamp

Carbon Copy Events	Status	Timestamp
Sherri Revis sherri.revis@chandleraz.gov Security Level: Email, Account Authentication (None) **Electronic Record and Signature Disclosure:** Not Offered via Docusign		

Witness Events	Signature	Timestamp

Notary Events	Signature	Timestamp

Envelope Summary Events	Status	Timestamps
Envelope Sent	Hashed/Encrypted	8/21/2025 | 10:32 AM

Payment Events	Status	Timestamps

Electronic Record and Signature Disclosure

ELECTRONIC RECORD AND SIGNATURE DISCLOSURE

From time to time, City of Chandler (we, us or Company) may be required by law to provide to you certain written notices or disclosures. Described below are the terms and conditions for providing to you such notices and disclosures electronically through the DocuSign system. Please read the information below carefully and thoroughly, and if you can access this information electronically to your satisfaction and agree to this Electronic Record and Signature Disclosure (ERSD), please confirm your agreement by selecting the check-box next to 'I agree to use electronic records and signatures' before clicking 'CONTINUE' within the DocuSign system.

Getting paper copies

At any time, you may request from us a paper copy of any record provided or made available electronically to you by us. You will have the ability to download and print documents we send to you through the DocuSign system during and immediately after the signing session and, if you elect to create a DocuSign account, you may access the documents for a limited period of time (usually 30 days) after such documents are first sent to you. After such time, if you wish for us to send you paper copies of any such documents from our office to you, you will be charged a $0.15 per-page fee. You may request delivery of such paper copies from us by following the procedure described below.

Withdrawing your consent

If you decide to receive notices and disclosures from us electronically, you may at any time change your mind and tell us that thereafter you want to receive required notices and disclosures only in paper format. How you must inform us of your decision to receive future notices and disclosure in paper format and withdraw your consent to receive notices and disclosures electronically is described below.

Consequences of changing your mind

If you elect to receive required notices and disclosures only in paper format, it will slow the speed at which we can complete certain steps in transactions with you and delivering services to you because we will need first to send the required notices or disclosures to you in paper format, and then wait until we receive back from you your acknowledgment of your receipt of such paper notices or disclosures. Further, you will no longer be able to use the DocuSign system to receive required notices and consents electronically from us or to sign electronically documents from us.

All notices and disclosures will be sent to you electronically

Unless you tell us otherwise in accordance with the procedures described herein, we will provide electronically to you through the DocuSign system all required notices, disclosures, authorizations, acknowledgements, and other documents that are required to be provided or made available to you during the course of our relationship with you. To reduce the chance of you inadvertently not receiving any notice or disclosure, we prefer to provide all of the required notices and disclosures to you by the same method and to the same address that you have given us. Thus, you can receive all the disclosures and notices electronically or in paper format through the paper mail delivery system. If you do not agree with this process, please let us know as described below. Please also see the paragraph immediately above that describes the consequences of your electing not to receive delivery of the notices and disclosures electronically from us.

How to contact City of Chandler:

You may contact us to let us know of your changes as to how we may contact you electronically, to request paper copies of certain information from us, and to withdraw your prior consent to receive notices and disclosures electronically as follows:
To contact us by email send messages to: esignature@chandleraz.gov

To advise City of Chandler of your new email address

To let us know of a change in your email address where we should send notices and disclosures electronically to you, you must send an email message to us at esignature@chandleraz.gov and in the body of such request you must state: your previous email address, your new email address. We do not require any other information from you to change your email address.

If you created a DocuSign account, you may update it with your new email address through your account preferences.

To request paper copies from City of Chandler

To request delivery from us of paper copies of the notices and disclosures previously provided by us to you electronically, you must send us an email to esignature@chandleraz.gov and in the body of such request you must state your email address, full name, mailing address, and telephone number. We will bill you for any fees at that time, if any.

To withdraw your consent with City of Chandler

To inform us that you no longer wish to receive future notices and disclosures in electronic format you may:

i. decline to sign a document from within your signing session, and on the subsequent page, select the check-box indicating you wish to withdraw your consent, or you may;

ii. send us an email to esignature@chandleraz.gov and in the body of such request you must state your email, full name, mailing address, and telephone number. We do not need any other information from you to withdraw consent.. The consequences of your withdrawing consent for online documents will be that transactions may take a longer time to process..

Required hardware and software

The minimum system requirements for using the DocuSign system may change over time. The current system requirements are found here: https://support.docusign.com/guides/signer-guide-signing-system-requirements.

Acknowledging your access and consent to receive and sign documents electronically

To confirm to us that you can access this information electronically, which will be similar to other electronic notices and disclosures that we will provide to you, please confirm that you have read this ERSD, and (i) that you are able to print on paper or electronically save this ERSD for your future reference and access; or (ii) that you are able to email this ERSD to an email address where you will be able to print on paper or save it for your future reference and access. Further, if you consent to receiving notices and disclosures exclusively in electronic format as described herein, then select the check-box next to 'I agree to use electronic records and signatures' before clicking 'CONTINUE' within the DocuSign system.

By selecting the check-box next to 'I agree to use electronic records and signatures', you confirm that:

- You can access and read this Electronic Record and Signature Disclosure; and
- You can print on paper this Electronic Record and Signature Disclosure, or save or send this Electronic Record and Disclosure to a location where you can print it, for future reference and access; and
- Until or unless you notify City of Chandler as described above, you consent to receive exclusively through electronic means all notices, disclosures, authorizations, acknowledgements, and other documents that are required to be provided or made available to you by City of Chandler during the course of your relationship with City of Chandler.

City Council Memorandum Facilities and Fleet Memo No. N/A

Date: September 15, 2025
To: Mayor and Council
Thru: John M. Pombier, Acting City Manager
Ryan Peters, Deputy City Manager
From: Mike Hollingsworth, Facility & Fleet Services Senior Manager
Subject: Purchase of HVAC Equipment, Installation, and Services from TD Industries, Johnson Controls, Inc., Daikin Applied Americas, Inc., and Trane U.S. Inc.

Proposed Motion:

Move City Council approve the purchase of heat, ventilation, and cooling (HVAC) equipment, installation, and services, utilizing multiple vendors available under the Omnia Partners Contract No. R200403, with TDI Industries, Inc., Contract No. R200402, with Johnson Controls, Inc., Contract No. R200401, with Daikin Applied Americas, Inc., and Contract No. 15-JLP-023, with Trane U.S., Inc., and the Mohave Educational Services Cooperative Contract No. 19F-SMC-0904, with Sun Mechanical Contracting, Inc., in a combined amount not to exceed $3,645,000.

Background/Discussion:

The Buildings and Facilities Division routinely engages outside vendors to perform replacement, repair, and maintenance of the City's Heating, Ventilation, and Air Conditioning (HVAC) systems. This agreement establishes a roster of qualified contractors to provide scheduled, preventative, and emergency HVAC services across City facilities. Under this agreement, the Division will address emergency repairs and/or replacement of packaged units, chillers, boilers, and other related HVAC equipment. By ensuring timely maintenance and rapid response to equipment issues, this program helps prevent premature failures during periods of high demand and supports optimal energy efficiency across the City's HVAC infrastructure.

Evaluation:

Omnia Partners and Mohave Educational Services Cooperative competitively solicited and awarded contracts for HVAC equipment, installation, and services to TD Industries, Inc., Johnson Controls, Inc., Daikin Applied Americas, Inc., Trane U.S., Inc., and Sun Mechanical Contracting, Inc. The city has agreements with both Omnia Partners and Mohave Educational Services Cooperative that allow for the cooperative use of these contracts. The utilization of both of these contracts, each of which has multiple vendors available, will allow more than one project to be completed at the same time.

Fiscal Impact

Account No.	Fund Name	Program Name	Dollar Amount	CIP Funded Y/N
615.3970.5419	Wastewater Operating	N/A	$500,000	N
616.3930.5410	Wast Industrial Process Treatment	N/A	$50,000	N
615.3900.5419	Wastewater Operating	N/A	$25,000	N
612.3960.5419	Reclaimed Water Operating	N/A	$50,000	N
612.3960.5410	Reclaimed Water Operating	N/A	$500,000	N
612.3980.5419	Reclaimed Water Operating	N/A	$10,000	N
605.3860.5410	Water Operating	N/A	$200,000	N
625.3700.5410	Solid Waste Operating	N/A	$10,000	N
401.3210.6210.6BF628	General Gov't Capital Projects	Existing City Building Renov/Repair	$500,000	Y
441.3210.6210.6BF628	Public Facility Bonds	Existing City Building Renov/Repair	$1,800,000	Y

City Council Memorandum Facilities and Fleet Memo No. N/A

Date: September 15, 2025
To: Mayor and Council
Thru: John M. Pombier, Acting City Manager
Ryan Peters, Deputy City Manager
From: Mike Hollingsworth, Facility & Fleet Services Senior Manager
Subject: Purchase of Maintenance, Repairs and Purchase of Doors, Locking Systems, Door Hardware, and Operable Walls

---

Proposed Motion:

Move City Council approve the utilization of the Mohave Educational Services Cooperative Contract No. 21H-DHP-0917, for maintenance, repairs, and purchase of bay doors, locking systems, door hardware, and operable walls, from DH Pace Company, Inc., in an amount not to exceed $550,000, for the period of one year, September 17, 2025, through September 16, 2026.

Background/Discussion:

The city is responsible for the upkeep of numerous doors, locking systems, gates, and operable walls throughout its facilities. Under this agreement, DH Pace will perform maintenance and repair services for overhead doors, locking systems, gates, door hardware, and operable walls. The agreement also allows for the purchase of related parts as needed to support these repairs and maintenance activities.

Evaluation:

Mohave Educational Services Cooperative, Inc., competitively solicited and awarded a contract to DH Pace Company, Inc., for doors, locking systems, door hardware and operable walls. The city has an agreement with Mohave Educational Services Cooperative that permits the cooperative use of its contracts. The term of the Mohave Educational Services Cooperative contract is valid through September 16, 2026.

Fiscal Impact

Account No.	Fund Name	Program Name	Dollar Amount	CIP Funded Y/N
615.3900.5419	Wastewater Operating	N/A	$15,000	N
605.3860.5410	Water Operating	N/A	$80,000	N
615.3970.5410	Wastewater Operating	N/A	$20,000	N
625.3720.5410	Solid Waste Operating	N/A	$5,000	N
401.3210.6210.0.6BF628	General Gov't Capital Projects	Existing City Building Renov/Repair	$150,000	Y
101.4520.5219	General Fund	N/A	$80,000	N
615.3960.5410	Wastewater Operating	N/A	$200,000	N

City Council Memorandum Fire Memo No.

Date: September 15, 2025
To: Mayor and Council
Thru: John M. Pombier, Acting City Manager
Tadd Wille, Assistant City Manager
Thomas Dwiggins, Fire Chief
From: Haley Bartosik, Senior Management Analyst
Subject: Resolution No. 5933 Authorizing the Acceptance of Gaming Revenue Sharing Grant Funds from the Gila River Indian Community for the Chandler Fire Department

---

Proposed Motion:

Move City Council pass and adopt Resolution No. 5933 authorizing the acceptance of gaming revenue-sharing grant funds from the Gila River Indian Community in the amount of $59,262, for the purpose of supporting the purchase of battery-operated fans for fire apparatus for the Chandler Fire Department.

Background:

The Gila River Indian Community allocates a portion of gaming revenue to provide grant opportunities for Arizona municipalities in support of government services in the areas of economic development, education, healthcare, public safety, and transportation. The Chandler Fire Department (CFD) has been awarded funds from this program and seeks to utilize them to purchase battery-operated fans for fire apparatus. These fans are an important tool in firefighting efforts, as they provide positive pressure ventilation to a structure, displacing smoke from the building and improving the speed and effectiveness of search and rescue operations.

Discussion:

Currently, Chandler Fire ladder trucks are equipped with battery-powered fans, but engines continue to rely on older, corded fans. Fans requiring an external power source are limited by the location and availability of accessible outlets, which slows deployment and reduces operational flexibility. The proposed battery-powered fans can be placed anywhere without the need for a dedicated power source, offering greater speed, mobility, and reliability.

The awarded grant of $59,262 will allow CFD to purchase seven fans at a cost of $8,466 per unit, which includes batteries, chargers, and tax. Each fan operates on a dual battery system capable of running for up to 60 minutes on a single charge while delivering maximum airflow. This technology enhances firefighter safety by reducing exposure to smoke-filled environments and improves response times and effectiveness in rescue situations. The expanded use of battery-powered fans across all fire apparatus units will also enhance public safety by allowing quicker and more efficient emergency response throughout the community.

Financial Implications:

This reimbursable grant does not require matching funds.

Attachments

Gila River Indian Community Grant Application

Resolution No. 5933

Gila River Indian Community Grant Application
Grant Cycle 2025

Cover Sheet

Click field or use up/down arrow keys to move among fields

Municipality Information		
1. Date of Application: 2/24/2025		
2. Name of City, Town or County: City of Chandler		
3. Mayor (City or Town) or Board of Supervisor's Chairman (County): Mayor Kevin Hartke		
4. Mailing Address: 175 S Arizona Ave		
5. City: Chandler	**State:** Arizona	**Zip Code:** 85225
6. Acknowledgement of Submission by Authorized Municipality Representative: **Typed Name/Title:** Dawn Lang/Deputy City Manager | CFO **Email Address:** dawn.lang@chandleraz.gov	**Signature:** Dawn Lang	
Applicant Information		
7. Department/Organization Name: Chandler Fire Department		
8. Select Organization Type: Municipality	**If Non-profit please attach IRS Determination Letter**	
9. Application Contact Person: Robert Steele **Title:** Sr Management Analyst		
10. Phone Number: 480-782-2126		
11. Mailing Address: 151 E Boston St		
12. City: Chandler	**State:** Arizona	**Zip Code:** 85224
13. Email Address: robert.steele@chandleraz.gov	**Website Address:** www.chandleraz.gov	
Project Information		
14. Project Title: Battery Powered Fans		
15. Purpose of Grant: Purchase of battery powered fans for use on fire engines		

16. Priority Funding Area	Public Safety
17. Annual amount requested	$126,990.00
18. Number of years that funding is requested	1 year requested – one-time funding grant cycle 2025
19. Total amount requested (annual amount x number of years)	$126,990.00
20. Has your organization received past funding from GRIC? If yes, list each year and amount	Yes, $222,114.00 was received in 2022 and $42,971.74 was received in 2021
21. Geographic area served	Chandler AZ, Maricopa County

For Office Use Only:		
Data Entry	Receipt	Evaluation
☐ Approval – Amount/Term		☐ Denial

Narrative

Please structure your proposal to provide the following information in the order indicated. Provide the narrative in paragraph form in the text field provided. Please be thorough but strive for brevity.

1. Briefly describe your organization's history, mission and goals.

The City of Chandler, incorporated on February 17, 1920, is located in the southeastern portion of Maricopa County, and encompasses approximately 65 square miles. Chandler has been an innovative community shaped by entrepreneurs and hometown traditions since being founded by Dr. A.J. Chandler as one of Arizona's first master-planned communities in 1912. A legacy of Chandler families and business enterprises has established a foundation for our community to build upon. Their commitment to the pursuit of opportunity and advancement of the community combined with decades of thoughtful, consistent planning and investments have transformed Chandler into the Community of Innovation we know today.

Chandler is the fourth largest city in Arizona and is one of several major cities comprising the greater Phoenix metropolitan area, which is the economic, political, and population center of the State of Arizona. Chandler's population has experienced remarkable growth over the past 25 years. The city's manufacturing sector and information technology industry has been a major driver of economic growth and attraction to Chandler. The city has stabilized its financial position by utilizing a mix of diversified revenue sources. Managing costs of services during a time of inflation and higher cost of personnel in the market is critical. Grants provide the city the opportunity to increase our reach and expand our services to our community.

The City of Chandler's continued goal is to provide the highest quality services to the community in the most cost-effective manner. These services include Public Safety: Police and Fire; Community Services: Park and Recreation and Libraries; Cultural Development: Center for the Arts and Museum; Public Works: Streets and Traffic; Utilities: Water, Wastewater, Reclaimed Water and Solid Waste; Neighborhood Resources; Development Services; Airport; Tax and Licensing and numerous internal services.

Our Mission is that we are committed to serve Chandler's citizens through teamwork, understanding and dedication in a professional and responsive manner. Our Vision, to make Chandler a world-class city by delivering outstanding public services, creating a unique community. Chandler's quality of life is consistently recognized nationally among the safest and most prosperous communities.

The Chandler Fire Department is a progressive, internationally accredited organization with an ISO Class 1 rating and a distinguished history of service to the community. On June 22, 1937, the first meeting of the Chandler Fire Department (CFD) was held. Initially staffed by volunteer, CFD's first paid Fire Chief was hired in 1953. In 1975, CFD added advanced emergency care by training three firefighters as paramedics.

Since that time CFD has evolved into an internationally accredited agency that operates 11 fire stations, a regional training facility, a fire administration building, and a mechanical maintenance facility.

Presently, CFD provides fire, emergency medical, hazardous material, and technical rescue services to its residents and those of neighboring cities (under automatic and mutual aid agreements). In total, CFD responded to 28,861emergency incidents in FY 23-24. Currently there are 256 sworn and civilian within the organization. All station personnel are EMT certified, and many are also paramedics. Additional certifications held by Chandler firefighters include Hazmat, technical rescue, child passenger safety technician and bilingual specializations.

The Department's mission statement reads as follows:

Chandler Fire is:

- Responsive to the Needs of the Community
- Committed to Community Involvement
- Dedicated to Customer Service
- Proud of our Professionalism

2. To determine eligibility for this grant please select one item in the drop-down below.

   Municipality

   If Municipal, please go to number 3 below.

   If Non-Municipal or Non-profit, please describe how the services provided by your organization align with a government service of the supporting municipality. Explain how this project will support that service and describe the municipality's role in the project if applicable (beyond serving as a pass-through).

   Click here to enter text.

3. Describe the proposed project, objectives, and your plan to implement.

   This grant would support the purchase of battery powered fans for all fire engines. Fans are used in firefighting operations to provide positive pressure to a structure, displacing smoke from the building. This tactic improves the speed and effectiveness of search and resuce efforts. Battery technology is used in a variety of firefighting equipment including vehicle extrication, thermal imaging cameras, and fans. Currently, Chandler Fire ladder trucks use these improved fans, but fire engines are still using older corded fans. Fans that require a power cord are limited by the location and availability of accessible power. The new battery

fans can be placed anywhere without locating a power source which will improve the speed of deployment and offer increased flexibility in usage.

4. Describe how the proposed project satisfies one or more of the priority funding areas identified by the Gila River Indian Community.

The proposed project addresses the public safety priority area by increasing the functionality of the firefighting process and ensuring that the best firefighting techniques are being used. By funding battery powered fans the safety of Chander firefighters is increased, as well as the ability to provde quicker assistance in rescur situations where every moment counts. Being able to use the fans any response call regardless of power source availability provides maximum increased safety to the public by improving response times of all Chandler Fire units and not being limited to just the ladder units.

5. Identify the needs/problems to be addressed, the target population and number of people to be served by the project.

Inconsistent availability of power sources when fighting fire and using fans is an issue. Not being able to use a fan in the firefighting operation can cause delay in rescues, and safety of those fighting the fire as smoke inhilation is known to cause issues in the lungs, including potentially cancer. This project would benefit not only the residents of the city, but also residents of neighbouring communities, including the Gila River Indian Community, when mutual aid is being provided.

6. Define the project as a new or continuing program. Has GRIC previously funded this project?

This is a new project that has not been funded previously.

7. Provide a brief timeline including start and finish dates. Indicate if the timeline is flexible.

The project would commence on July 1, 2025 and the purchases of the fans would be completed no later than June 30, 2026. The timeline is flexible depending on when funding notification is received, but would be completed within the noted timeframe.

8. Identify other organizations, partners or funders participating in the project and their roles.

There are no other partners in this project.

9. Would you be able to implement the proposed plan if your organization received partial funding for this project?

   We would be able to implement part of the proposed plan, but would not be able to fund fans for all engines. A determination would have to be made which engines and stations needed the battery fans the most and allocate the resources in that manner.

10. Describe your plan for project financial sustainability beyond the grant period. If this is a program/project previously funded by the Gila River Indian Community, describe efforts made towards the previously described sustainability plan.

    After the initial purchase of the fans, the objective of the department would be to create a replacement schedule for each of the new fans and try and purchase replacements over the ensuing years in smaller quantities, so there would be back-up fans in stock when the initial fans purchased break or need to be replaced.

11. Describe your plan to document progress and results.

    All required reports will be submitted according to the format and timetable specified by the Gila River Indian Community at the time of the award. CFD will keep physical and digital copies of all relevant grant documents through the grant period. All purchases made with grant funding will be tracked separately in the City of Chandler accounting system to ensure an accurate and complete recording of expenditures. Results would be captured through feedback from crews and training evolutions with the new tools. The Department expects these new fans to perform in a more consistent manner than the corded fans currently being used, which will increase the effectiveness and timely access to fire suppression activity.

12. Indicate any application to and/or awards made by a tribe other than the Gila River Indian Community for state shared revenues for this and any other project for the past five (5) years.

    Not applicable.

Project Budget

Budget Period: 7/1/2025 to 6/30/2026

For each budget item listed, please provide a narrative description on the following Project Budget Detail page.

Column 1	Column 2	Column 3	Column 4	Column 5
Proposed Budget Expense (list each budget item)	Amount requested from GRIC	Amount requested or secured from other sources	In Kind or matching contributions	Total Budget
1. Hurst 18" PPV for EWXT battery powered fan with (2) 25.2v batteries and 110-240v charger	$126,990	$0	$0	$126,990
2. Click here to enter text.	$0	$0	$0	$0
3. Click here to enter text.	$0	$0	$0	$0
4. Click here to enter text.	$0	$0	$0	$0
5. Click here to enter text.	$0	$0	$0	$0
6. Click here to enter text.	$0	$0	$0	$0
7. Click here to enter text.	$0	$0	$0	$0
8. Click here to enter text.	$0	$0	$0	$0
9. Click here to enter text.	$0	$0	$0	$0
10. Click here to enter text.	$0	$0	$0	$0
11. Click here to enter text.	$0	$0	$0	$0
12. Click here to enter text.	$0	$0	$0	$0
13. Click here to enter text.	$0	$0	$0	$0
14. Click here to enter text.	$0	$0	$0	$0
15. Click here to enter text.	$0	$0	$0	$0
Total Budget	$126,990	$0	$0	$126,990

Project Budget Detail

Please provide a narrative description for each of the project budget items listed on the previous page. Include the dollar figure and how it was attained.

1. Purchase of battery powered fans for all fire engines, plus 3 reserve fans. $126,990.00 is being requested based on research of the desired equipment item, 15 fans priced at $8,466 for the fan, two batteries and a battery charger. This is based on a quote received from LN Curtis, a common supplier of firefighting equipment.

2. Click here to enter text.

3. Click here to enter text.

4. Click here to enter text.

5. Click here to enter text.

6. Click here to enter text.

7. Click here to enter text.

8. Click here to enter text.

9. Click here to enter text.

10. Click here to enter text.

11. Click here to enter text.

12. Click here to enter text.

13. Click here to enter text.

14. Click here to enter text.

15. Click here to enter text.

Other explanation: Click here to enter text.

To ensure a complete application and proper submission please refer to the Grant Application Instructions.

RESOLUTION NO. 5933

A RESOLUTION OF THE CITY COUNCIL OF THE CITY OF CHANDLER, ARIZONA, AUTHORIZING THE SUBMITTAL OF AN APPLICATION FOR AN INDIAN GAMING REVENUE SHARING GRANT TO THE GILA RIVER INDIAN COMMUNITY ON BEHALF OF CHANDLER FIRE DEPARTMENT IN THE AMOUNT OF $59,262.

WHEREAS, pursuant to A.R.S. § 5-601.02, Indian tribes entering a tribal-state gaming compact shall contribute monies to "… cities, towns and counties … for government services that benefit the general public, including public safety, mitigation of impacts of gaming, and promotion of commerce and economic development"; and

WHEREAS, Indian tribes entering a tribal-state gaming compact have various grant application procedures for evaluating which cities, towns, and counties, and which government services, will receive gaming revenue sharing contributions pursuant to A.R.S. § 5-601.02; and

WHEREAS, Chandler Fire Department wishes to submit an application for such Indian gaming revenue sharing grant funding to the Gila River Indian Community in the amount of $59,262 and

WHEREAS, the funding sought is for the purpose of purchasing seven battery-powered fans, as further described in the application materials, which are incorporated by reference; and

WHEREAS, the City Manager's Office has reviewed the application materials and believes that the funding request described in the application materials qualifies as being for government-related services that benefit the public and is consistent with the City's Administrative Regulation regarding such grant applications.

NOW, THEREFORE, BE IT RESOLVED by the City Council of the City of Chandler, Arizona, as follows:

Section 1. Authorizing the city to submit this resolution and the grant application materials to the Gila River Indian Community.

Section 2. Authorizing the Mayor or his designee to execute the application form or letter in conjunction with the grant application to be submitted to the Gila River Indian Community on behalf of Chandler Fire Department.

Section 3. Authorizing acceptance of the grant on behalf of Chandler Fire Department in the amount of $59,262 or any other lesser or greater amount awarded.

PASSED AND ADOPTED by the City Council of the City of Chandler, Arizona, this _____ day of September, 2025.

ATTEST:

_____ _____
CITY CLERK MAYOR

CERTIFICATION

I HEREBY CERTIFY that the above and foregoing Resolution No. 5933 was duly passed and adopted by the City Council of the City of Chandler, Arizona, at a regular meeting held on the day of September, 2025, and that a quorum was present thereat.

_____
CITY CLERK

APPROVED AS TO FORM:

_____
CITY ATTORNEY

City Council Memorandum Fire Memo No. N/A

Date: September 15, 2025
To: Mayor and Council
Thru: John M. Pombier, Acting City Manager
Tadd Wille, Assistant City Manager
Thomas Dwiggins, Fire Chief
From: Keith Hargis, Assistant Fire Chief
Subject: Purchase of Chest Compression Systems and Accessories from Stryker Sales, LLC

Proposed Motion:

Move City Council approve the purchase of Chest Compression Systems and Accessories from Stryker Sales, LLC., utilizing the Sourcewell Contract No. 041823-STY, in the amount of $257,099, and authorize the Acting City Manager or designee to sign a linking agreement with Stryker Sales, LLC.

Background/Discussion:

Automated chest compression systems deliver consistent, high-quality compressions during CPR, which significantly improves outcomes for patients in cardiac arrest. These devices maintain continuous compressions during patient movement and transport, eliminating interruptions and enhancing survival rates. They also improve provider safety by reducing fatigue and allowing crew members to remain seated with seatbelts fastened. While the device performs compressions, on-scene providers can focus on other life-saving treatments.

The Chandler Fire Department (CFD) seeks approval to purchase chest compression systems and accessories from Stryker Sales, LLC. Stryker devices are currently in use by Maricopa Ambulance and at the hospitals most frequently receiving CFD patients, ensuring consistency and rapid handoffs with minimal disruption. Field testing showed this model outperformed other devices evaluated by CFD crews and committee members.

Evaluation:

Sourcewell has competitively solicited and awarded contracts for emergency medical services equipment. The City of Chandler maintains an agreement with Sourcewell allowing cooperative use of these contracts. The contract is valid through June 30, 2027.

Financial Implications:

CFD proposes purchasing eight chest compression systems—one for each ambulance—plus one spare unit, for a total cost of $257,099. The price includes the devices, batteries, battery chargers, ProCare service, shipping, and tax. The purchase will be funded through the Ambulance Service Fund under the cooperative Sourcewell contract.

- Unit cost: $32,137.34 per device.
- Price timing: Purchase prior to October 1, 2025, to avoid a scheduled 4% price increase.

This acquisition will standardize equipment across CFD units, enhance patient outcomes, and improve provider safety while ensuring rapid ambulance turnaround to serve the community.

Fiscal Impact

Account No.	Fund Name	Program Name	Dollar Amount	CIP Funded Y/N
626.2250.6318.6FI662	Ambulance Service Fund	Ambulance Emergency Vehicles	$257,099	Y

City Council Memorandum Human Resources Memo No. N/A

Date: September 15, 2025
To: Mayor and Council
Thru: John M. Pombier, Acting City Manager
Tadd Wille, Assistant City Manager
Kristin Maier, Acting Human Resources Director
From: Fernanda Acurio, Benefits & Compensation Manager
Subject: Agreement No. 4802, Amendment No. 1, Employee Benefits Consulting Services

---

Proposed Motion:

Move City Council approve Agreement No. 4802, Amendment No. 1, with The Segal Company (Western States), Inc., for employee benefits consulting services, in an amount not to exceed $120,000, for the period of one year, beginning January 1, 2026, through December 31, 2026.

Background/Discussion:

The city has historically employed the services of a benefits consultant to assist with the administrative provider management of all group and voluntary insurance plans including health and pharmacy, life, dental, vision, flexible spending, and employee assistance. The consultant assists the city in defining and continuously validating long-term benefit strategies that align its needs with those of the plan participants. The consultant is involved in claims and utilization analysis, actuarial analysis of the self-insured plans, plan performance reviews, compliance adherence, competitive solicitation analysis, and negotiations. Additionally, the consultant advises staff of legislative and regulatory changes that impact the city's benefits programs and works with the Health Benefits Trust Board and the city's Employee Healthcare Taskforce to review plan design strategies to reduce healthcare costs while still providing a competitive benefits package.

Evaluation:

On October 17, 2024, City Council approved an agreement with The Segal Company (Western States), Inc., for employee benefits consulting services, for a one-year period, with the option of up to four one-year extensions. The Contractor has agreed to extend for one additional year at the same terms, conditions and pricing. Staff recommends the extension of the agreement for the term of January 1, 2026, through December 31, 2026.

Financial Implications:

Account No.	Fund Name	Program Name	Dollar Amount	CIP Funded Y/N
741.1290.5219	Medical Self-Insured	N/A	$120,000	N

Fiscal Impact

Account No.	**Fund Name**	**Program Name**	**Dollar Amount**	**CIP Funded Y/N**
741.1290.5219.0.0.0	Medical Self Insurance	N/A	$120,000	N

Attachments

Amendment

Docusign Envelope ID: D928AAEE-F830-412C-AB0B-E1BD6FD44E5C

City Clerk Document No. _____

City Council Meeting Date: September 18, 2025

AMENDMENT TO CITY OF CHANDLER AGREEMENT
EMPLOYEE BENEFITS CONSULTING SERVICES
CITY OF CHANDLER AGREEMENT NO. 4802

THIS AMENDMENT NO. 1 (Amendment No. 1) is made and entered into by and between the City of Chandler, an Arizona municipal corporation (City), and The Segal Company (Western States), Inc. (Contractor), (City and Contractor may individually be referred to as Party and collectively referred to as Parties) and made _____ , 2025 (Effective Date).

RECITALS

WHEREAS, the Parties entered into an agreement for employee benefits consulting services (Agreement); and

WHEREAS, the term of the Agreement was January 1, 2025, through December 31, 2025, with the option of up to four one-year extensions; and

WHEREAS, the Parties wish to exercise the first option through this Amendment to extend the Agreement for one year.

AGREEMENT

NOW THEREFORE, the Parties agree as follows:

1. The recitals are accurate and are incorporated and made a part of the Agreement by this reference.

2. Section III is amended to read as follows: The Agreement is extended for a one-year period January 1, 2026, through December 31, 2026, unless sooner terminated in accordance with the provisions of this Agreement.

3. Section IV is amended to read as follows: The City will pay the Contractor the per unit cost set forth in Exhibit B of the original Agreement, which is incorporated into and made a part of this

Docusign Envelope ID: D928AAEE-F830-412C-AB0B-E1BD6FD44E5C

Amendment No. 1 by this reference. Total payments made to the Contractor during the term of this Amendment No. 1 will not exceed $120,000.

4. All other terms and conditions of the Agreement remain unchanged and in full force and effect. If a conflict or ambiguity arises between this Amendment No. 1 and the Agreement, the terms and conditions in this Amendment No. 1 prevail and control.

IN WITNESS WHEREOF, the Parties have entered into this Amendment on the Effective Date.

FOR THE CITY

By: _____

Its: Mayor

FOR THE CONTRACTOR

By: Richard Ward

Its: Sr. Vice President

APPROVED AS TO FORM:

By: _____

City Attorney RSL

ATTEST:

By: _____

City Clerk

Certificate Of Completion

Envelope Id: D928AAEE-F830-412C-AB0B-E1BD6FD44E5C
Status: Sent
Subject: Complete with Docusign: 4802 Segal CY 2026 Amendment .pdf
EDMS Application: CC-AGRMTS
Source Envelope:
Document Pages: 2
Signatures: 1
Envelope Originator:
Certificate Pages: 5
Initials: 0
Christina Pryor
AutoNav: Enabled
PO Box 4008
EnvelopeId Stamping: Enabled
Chandler, 85244
Time Zone: (UTC-07:00) Arizona
Christina.Pryor@chandleraz.gov
IP Address: 198.241.2.1

Record Tracking

Status: Original
8/14/2025 | 12:05 PM
Holder: Christina Pryor
Christina.Pryor@chandleraz.gov
Location: DocuSign
Security Appliance Status: Connected
Pool: StateLocal
Storage Appliance Status: Connected
Pool: City of Chandler
Location: Docusign

Signer Events	Signature	Timestamp
Richard Ward rward@segalco.com Sr. Vice President Security Level: Email, Account Authentication (None) **Electronic Record and Signature Disclosure:** Accepted: 8/14/2025 | 12:26 PM ID: cca662d2-0df2-4d2b-b84f-5fd24758eed1	Richard Ward Signature Adoption: Pre-selected Style Using IP Address: 208.87.236.180	Sent: 8/14/2025 | 12:10 PM Viewed: 8/14/2025 | 12:26 PM Signed: 8/14/2025 | 12:27 PM
Records Division Signing Group: Records Division Security Level: Email, Account Authentication (None) **Electronic Record and Signature Disclosure:** Not Offered via Docusign		
Roni Laxa Rowena.Laxa@chandleraz.gov Security Level: Email, Account Authentication (None) **Electronic Record and Signature Disclosure:** Accepted: 9/22/2021 | 09:44 AM ID: 840f9ca9-78aa-4caa-99bc-c4c879b2dd53		
Kevin Hartke kevin.hartke@chandleraz.gov Security Level: Email, Account Authentication (None) **Electronic Record and Signature Disclosure:** Accepted: 6/28/2021 | 11:17 AM ID: 2531f230-027c-41f7-9166-1189df6a8c8f		
Dana DeLong Dana.DeLong@chandleraz.gov Security Level: Email, Account Authentication (None) **Electronic Record and Signature Disclosure:**		

Signer Events	Signature	Timestamp
Accepted: 6/28/2021 | 01:03 PM ID: e796186e-c533-4a41-978c-34d69e29778a		

In Person Signer Events	Signature	Timestamp

Editor Delivery Events	Status	Timestamp
Records Division		Sent: 8/14/2025 | 12:27 PM

Signing Group: Records Division

Security Level: Email, Account Authentication (None)

Electronic Record and Signature Disclosure:
Not Offered via Docusign

Agent Delivery Events	Status	Timestamp

Intermediary Delivery Events	Status	Timestamp

Certified Delivery Events	Status	Timestamp

Carbon Copy Events	Status	Timestamp
Sherri Revis Sherri.Revis@chandleraz.gov Security Level: Email, Account Authentication (None) **Electronic Record and Signature Disclosure:** Not Offered via Docusign		

Witness Events	Signature	Timestamp

Notary Events	Signature	Timestamp

Envelope Summary Events	Status	Timestamps
Envelope Sent	Hashed/Encrypted	8/14/2025 | 12:10 PM

Payment Events	Status	Timestamps

Electronic Record and Signature Disclosure

ELECTRONIC RECORD AND SIGNATURE DISCLOSURE

From time to time, City of Chandler (we, us or Company) may be required by law to provide to you certain written notices or disclosures. Described below are the terms and conditions for providing to you such notices and disclosures electronically through the DocuSign system. Please read the information below carefully and thoroughly, and if you can access this information electronically to your satisfaction and agree to this Electronic Record and Signature Disclosure (ERSD), please confirm your agreement by selecting the check-box next to 'I agree to use electronic records and signatures' before clicking 'CONTINUE' within the DocuSign system.

Getting paper copies

At any time, you may request from us a paper copy of any record provided or made available electronically to you by us. You will have the ability to download and print documents we send to you through the DocuSign system during and immediately after the signing session and, if you elect to create a DocuSign account, you may access the documents for a limited period of time (usually 30 days) after such documents are first sent to you. After such time, if you wish for us to send you paper copies of any such documents from our office to you, you will be charged a $0.15 per-page fee. You may request delivery of such paper copies from us by following the procedure described below.

Withdrawing your consent

If you decide to receive notices and disclosures from us electronically, you may at any time change your mind and tell us that thereafter you want to receive required notices and disclosures only in paper format. How you must inform us of your decision to receive future notices and disclosure in paper format and withdraw your consent to receive notices and disclosures electronically is described below.

Consequences of changing your mind

If you elect to receive required notices and disclosures only in paper format, it will slow the speed at which we can complete certain steps in transactions with you and delivering services to you because we will need first to send the required notices or disclosures to you in paper format, and then wait until we receive back from you your acknowledgment of your receipt of such paper notices or disclosures. Further, you will no longer be able to use the DocuSign system to receive required notices and consents electronically from us or to sign electronically documents from us.

All notices and disclosures will be sent to you electronically

Unless you tell us otherwise in accordance with the procedures described herein, we will provide electronically to you through the DocuSign system all required notices, disclosures, authorizations, acknowledgements, and other documents that are required to be provided or made available to you during the course of our relationship with you. To reduce the chance of you inadvertently not receiving any notice or disclosure, we prefer to provide all of the required notices and disclosures to you by the same method and to the same address that you have given us. Thus, you can receive all the disclosures and notices electronically or in paper format through the paper mail delivery system. If you do not agree with this process, please let us know as described below. Please also see the paragraph immediately above that describes the consequences of your electing not to receive delivery of the notices and disclosures electronically from us.

How to contact City of Chandler:

You may contact us to let us know of your changes as to how we may contact you electronically, to request paper copies of certain information from us, and to withdraw your prior consent to receive notices and disclosures electronically as follows:
To contact us by email send messages to: esignature@chandleraz.gov

To advise City of Chandler of your new email address

To let us know of a change in your email address where we should send notices and disclosures electronically to you, you must send an email message to us at esignature@chandleraz.gov and in the body of such request you must state: your previous email address, your new email address. We do not require any other information from you to change your email address.

If you created a DocuSign account, you may update it with your new email address through your account preferences.

To request paper copies from City of Chandler

To request delivery from us of paper copies of the notices and disclosures previously provided by us to you electronically, you must send us an email to esignature@chandleraz.gov and in the body of such request you must state your email address, full name, mailing address, and telephone number. We will bill you for any fees at that time, if any.

To withdraw your consent with City of Chandler

To inform us that you no longer wish to receive future notices and disclosures in electronic format you may:

i. decline to sign a document from within your signing session, and on the subsequent page, select the check-box indicating you wish to withdraw your consent, or you may;

ii. send us an email to esignature@chandleraz.gov and in the body of such request you must state your email, full name, mailing address, and telephone number. We do not need any other information from you to withdraw consent.. The consequences of your withdrawing consent for online documents will be that transactions may take a longer time to process..

Required hardware and software

The minimum system requirements for using the DocuSign system may change over time. The current system requirements are found here: https://support.docusign.com/guides/signer-guide-signing-system-requirements.

Acknowledging your access and consent to receive and sign documents electronically

To confirm to us that you can access this information electronically, which will be similar to other electronic notices and disclosures that we will provide to you, please confirm that you have read this ERSD, and (i) that you are able to print on paper or electronically save this ERSD for your future reference and access; or (ii) that you are able to email this ERSD to an email address where you will be able to print on paper or save it for your future reference and access. Further, if you consent to receiving notices and disclosures exclusively in electronic format as described herein, then select the check-box next to 'I agree to use electronic records and signatures' before clicking 'CONTINUE' within the DocuSign system.

By selecting the check-box next to 'I agree to use electronic records and signatures', you confirm that:

- You can access and read this Electronic Record and Signature Disclosure; and
- You can print on paper this Electronic Record and Signature Disclosure, or save or send this Electronic Record and Disclosure to a location where you can print it, for future reference and access; and
- Until or unless you notify City of Chandler as described above, you consent to receive exclusively through electronic means all notices, disclosures, authorizations, acknowledgements, and other documents that are required to be provided or made available to you by City of Chandler during the course of your relationship with City of Chandler.

City Council Memorandum Human Resources Memo No. N/A

Date: September 15, 2025
To: Mayor and Council
Thru: John M. Pombier, Acting City Manager
Tadd Wille, Assistant City Manager
Kristin Maier, Acting Human Resources Director
From: Fernanda Acurio, Benefits & Compensation Manager
Subject: Agreement No. 1193, Calendar Year 2026 Amendment, with Delta Dental Plan of Arizona, Inc., for Dental Insurance Benefit

---

Proposed Motion:

Move City Council approve Agreement No. 1193, Calendar Year 2026 Amendment, with Delta Dental Plan of Arizona, Inc., for dental insurance benefit, for the period of one year, beginning January 1, 2026, through December 31, 2026.

Background/Discussion:

The city's dental benefit is reviewed throughout the year by staff and the city's benefits consultant. The dental plan offers services ranging from general teeth cleanings to orthodontia. Premiums are paid by both the city and employees. There are no premium increases for the 2026 plan year.

The administrative rate remains unchanged at $4.89 per month, per member. The administrative rate is paid by the city's self-funded dental plan.

Evaluation:

City staff review the employee benefits package each year with the assistance of the city's employee benefits consultant. Delta Dental Plan of Arizona, Inc., has provided dental services to employees since 2002. Staff recommends extension of the agreement.

Financial Implications:

Account No.	Fund Name	Program Name	Dollar Amount	CIP Funded Y/N
740.1290.5219	Dental Self Insurance	N/A	$135,500	N

Fiscal Impact

Account No.	Fund Name	Program Name	Dollar Amount	CIP Funded Y/N
740.1290.5219	Dental Self Insurance	N/A	$135,500	N

Attachments

Amendment

City Clerk Document No. _____

City Council Meeting Date: September 18, 2025

AMENDMENT TO CITY OF CHANDLER AGREEMENT
DENTAL SERVICE PLAN
CITY OF CHANDLER AGREEMENT NO. 1193

THIS CALENDAR YEAR 2026 AMENDMENT (CY 2026 Amendment) to Agreement No. 1193 for a dental service plan (the Agreement), is made and entered by and between the City of Chandler, an Arizona municipal corporation (City), and Delta Dental Plan of Arizona, Inc. (Contractor), (City and Contractor may individually be referred to as Party and collectively referred to as Parties) and made _____, 2025 (Effective Date).

RECITALS

WHEREAS, the Parties entered into an Agreement to provide Employer Group Dental benefits effective January 1, 2002; and

WHEREAS, the Agreement has been annually amended to adjust plan terms and rates and extend the term of the Agreement through December 31, 2025; and

WHEREAS, Contractor offered guaranteed rates for the period from January 1, 2024, through December 31, 2026; and

WHEREAS, the Parties wish to extend the Agreement subject to the same terms and conditions for an additional year through December 31, 2026.

AGREEMENT

NOW THEREFORE, the Parties agree as follows:

1. The recitals are accurate and are incorporated and made a part of the Agreement by this reference.

2. The term of the Agreement is extended for one year from January 1, 2026, through December 31, 2026, subject to the same terms and conditions.

3. All other terms and conditions of the Agreement remain unchanged and in full force and effect. If a conflict or ambiguity arises between this CY 2026 Amendment and the Agreement, the terms and conditions in this CY 2026 Amendment prevail and control.

IN WITNESS WHEREOF, the Parties have entered into this Amendment on the Effective Date.

FOR THE CITY	**FOR THE CONTRACTOR**
By: _____	By: _____
Its: Mayor	Its: Senior Vice President Commercial Growth

APPROVED AS TO FORM:

By: _____
City Attorney

ATTEST:

By: _____
City Clerk

City Council Memorandum Human Resources Memo No. N/A

Date: September 15, 2025
To: Mayor and Council
Thru: John M. Pombier, Acting City Manager
Tadd Wille, Assistant City Manager
Kristin Maier, Acting Human Resources Director
From: Fernanda Acurio, Benefits & Compensation Manager
Subject: Agreement No. HR-948-4496, Amendment No. 2, Basic and Voluntary Life and Accidental Death and Dismemberment Insurance

---

Proposed Motion:

Move City Council approve Agreement No. HR2-948-4496, Amendment No. 2, with ReliaStar Life Insurance Company, for basic and voluntary life and accidental death and dismemberment insurance, in an amount not to exceed $960,000 per year, for the period of two years, beginning January 1, 2026, through December 31, 2027.

Background/Discussion:

The City provides a life insurance benefit as a piece of the employee benefits package. The basic life and accidental death and dismemberment (AD&D) insurance is funded by the City and all supplemental coverage is funded by the employee based on the benefit selected. City staff reviews the employee benefits package each year with the assistance of an employee benefits consulting firm. This benefit provides basic life and accidental death and dismemberment insurance and supplemental life insurance for spouses and dependent children to benefit-eligible classes. There is a small rate increase for both basic life and supplemental life insurance, no changes for AD&D for CY2026 and CY2027.

Evaluation:

On November 7, 2022, City Council approved an agreement with ReliaStar Life Insurance Company for basic and voluntary life and accidental death and dismemberment insurance, for a two-year period, with the option of up to three two-year extensions. Staff recommends the two-year extension of the Agreement.

Financial Implications:

Each type of life insurance is funded differently depending on whether it is a City-provided benefit or the supplemental, employee-paid benefit. The city-funded Basic and AD&D benefits are paid from all cost centers across all funds where employees work. The Supplemental Voluntary Term and AD&D benefit is paid from the earnings of employees who opt for this coverage. In both cases, the funds are collected in a payroll clearing liability account to pay the total amount due to the insurance company. Retirees may opt for this coverage as well, and this amount is collected in a separate General Fund liability account and paid to the insurance company.

Fiscal Impact

Account No.	Fund Name	Program Name	Dollar Amount	CIP Funded Y/N
XXX.XXXX.5161	Various Funds	N/A	$960,000	N

Attachments

Amendment

Docusign Envelope ID: BFFADD1E-1B71-44D1-BD2D-B384C6014DA5

City Clerk Document No. _____

City Council Meeting Date: September 18, 2025

AMENDMENT TO CITY OF CHANDLER AGREEMENT
BASIC AND VOLUNTARY LIFE AND ACCIDENTAL DEATH AND DISMEMBERMENT INSURANCE
CITY OF CHANDLER AGREEMENT NO. HR2-948-4496

THIS AMENDMENT NO. 2 (Amendment No. 2) is made and entered into by and between the City of Chandler, an Arizona municipal corporation (City), and ReliaStar Life Insurance Company, a Minnesota corporation (Contractor), (City and Contractor may individually be referred to as Party and collectively referred to as Parties) and made _____ , 2025 (Effective Date).

RECITALS

WHEREAS, the Parties entered into an agreement for basic and voluntary life and accidental death and dismemberment insurance (Agreement); and

WHEREAS, the term of the Agreement was January 1, 2023, through December 31, 2024, with the option of up to three two-year extensions; and

WHEREAS, the Agreement was amended to extend its term for one year from January 1, 2025, through December 31, 2025, at rates guaranteed under the Agreement through December 31, 2025.

WHEREAS, Contractor offered new guaranteed rates for the period of January 1, 2026, through December 31, 2027; and

WHEREAS, the Parties wish to exercise the option through this Amendment to extend the Agreement for two years from January 1, 2026, through December 31, 2027, at the proposed guaranteed rates.

AGREEMENT

NOW THEREFORE, the Parties agree as follows:

1. The recitals are accurate and are incorporated and made a part of the Agreement by this reference.

Docusign Envelope ID: BFFADD1E-1B71-44D1-BD2D-B384C6014DA5

2. Section I.D., Term of Agreement, is amended to extend the Agreement for a two-year period from January 1, 2026, through December 31, 2027.

3. Section IV, Payment, is amended to state: The City will pay the Contractor the per unit costs set forth in Exhibit 1 hereto, which replace and supersede the corresponding rates in Contract Document 3, City of Chandler Services Agreement No. HR2-948-4465, Exhibit B, Compensation and Fees.

4. All other terms and conditions of the Agreement remain unchanged and in full force and effect. If a conflict or ambiguity arises between this Amendment No. 2 and the Agreement, the terms and conditions in this Amendment No. 2 prevail and control.

IN WITNESS WHEREOF, the Parties have entered into this Amendment on the Effective Date.

FOR THE CITY

By: _____

Its: Mayor

FOR THE CONTRACTOR

By: Dan Soderberg

Its: Vice President

APPROVED AS TO FORM:

By: _____

City Attorney RGL

ATTEST:

By: _____

City Clerk

EXHIBIT 1

Life Insurance Renewal Offer
City of Chandler
Group Benefit Plan: 674753
Class Name: All Employees

New Premium Rate Effective Date: **01/01/2026**

COVERAGE	Current Premium Rates	Renewal Premium Rates
Life Basic Employee, per $1,000	$0.070	$0.086
Life Basic Retiree, per $1,000	$0.070	$0.086
AD&D Basic Employee, per $1,000	$0.020	$0.020
Life Supplemental Employee, Non-Tobacco, per $1,000		
<20	$0.050	$0.053
20-24	$0.050	$0.053
25-29	$0.060	$0.063
30-34	$0.080	$0.084
35-39	$0.090	$0.095
40-44	$0.138	$0.145
45-49	$0.216	$0.227
50-54	$0.400	$0.420
55-59	$0.795	$0.835
60-64	$1.305	$1.370
65-69	$2.060	$2.163
70+	$2.060	$2.163
Life Supplemental Employee, Tobacco, per $1,000		
<20	$0.050	$0.053
20-24	$0.050	$0.053
25-29	$0.082	$0.086
30-34	$0.106	$0.111
35-39	$0.144	$0.151
40-44	$0.234	$0.246
45-49	$0.374	$0.393
50-54	$0.676	$0.710
55-59	$1.030	$1.082
60-64	$1.550	$1.628
65-69	$2.220	$2.331
70+	$2.220	$2.331
Life Supplemental Spouse, Non-Tobacco, per $1,000		
<20	$0.050	$0.053
20-24	$0.050	$0.053
25-29	$0.060	$0.063
30-34	$0.080	$0.084
35-39	$0.090	$0.095
40-44	$0.138	$0.145
45-49	$0.216	$0.227
50-54	$0.400	$0.420
55-59	$0.795	$0.835
60-64	$1.305	$1.370
65-69	$2.060	$2.163
70+	$2.060	$2.163
Life Supplemental Spouse, Tobacco, per $1,000		
<20	$0.050	$0.053
20-24	$0.050	$0.053

Docusign Envelope ID: BFFADD1E-1B71-44D1-BD2D-B384C6014DA5

Life Insurance Renewal Offer
City of Chandler
Group Benefit Plan: 674753
Class Name: All Employees (continued)

New Premium Rate Effective Date: **01/01/2026**

COVERAGE	Current Premium Rates	Renewal Premium Rates
25-29	$0.082	$0.086
30-34	$0.106	$0.111
35-39	$0.144	$0.151
40-44	$0.234	$0.246
45-49	$0.374	$0.393
50-54	$0.676	$0.710
55-59	$1.030	$1.082
60-64	$1.550	$1.628
65-69	$2.220	$2.331
70+	$2.220	$2.331
Life Supplemental Child, Option 1, Per $1,000	$0.123	$0.123
AD&D Supplemental Employee, per $1,000	$0.035	$0.035
AD&D Supplemental Spouse, per $1,000	$0.035	$0.035
AD&D Supplemental Children, per $1,000	$0.035	$0.035

Certificate Of Completion

Envelope Id: BFFADD1E-1B71-44D1-BD2D-B384C6014DA5
Status: Sent
Subject: Complete with Docusign: 4496 Voya CY2026 Amendment .pdf
EDMS Application: CC-AGRMTS
Source Envelope:

Document Pages: 4
Signatures: 1
Certificate Pages: 5
Initials: 0
AutoNav: Enabled
EnvelopeId Stamping: Enabled
Time Zone: (UTC-07:00) Arizona

Envelope Originator:
Christina Pryor
PO Box 4008
Chandler, 85244
Christina.Pryor@chandleraz.gov
IP Address: 198.241.2.1

Record Tracking

Status: Original
8/21/2025 | 10:35 AM
Security Appliance Status: Connected
Storage Appliance Status: Connected

Holder: Christina Pryor
Christina.Pryor@chandleraz.gov
Pool: StateLocal
Pool: City of Chandler

Location: DocuSign
Location: Docusign

Signer Events	Signature	Timestamp
Dan Soderberg Dan.Soderberg@voya.com Vice President Security Level: Email, Account Authentication (None) **Electronic Record and Signature Disclosure:** Accepted: 8/21/2025 | 10:41 AM ID: 787f36d2-d7db-4408-8177-992c2aef4733	Dan Soderberg Signature Adoption: Pre-selected Style Using IP Address: 165.225.62.38	Sent: 8/21/2025 | 10:40 AM Resent: 8/25/2025 | 09:06 AM Viewed: 8/25/2025 | 09:19 AM Signed: 8/25/2025 | 09:33 AM
Records Division		
Signing Group: Records Division Security Level: Email, Account Authentication (None) **Electronic Record and Signature Disclosure:** Not Offered via Docusign		
Roni Laxa Rowena.Laxa@chandleraz.gov Security Level: Email, Account Authentication (None) **Electronic Record and Signature Disclosure:** Accepted: 9/22/2021 | 09:44 AM ID: 840f9ca9-78aa-4caa-99bc-c4c879b2dd53		
Kevin Hartke kevin.hartke@chandleraz.gov Security Level: Email, Account Authentication (None) **Electronic Record and Signature Disclosure:** Accepted: 6/28/2021 | 11:17 AM ID: 2531f230-027c-41f7-9166-1189df6a8c8f		
Dana DeLong Dana.DeLong@chandleraz.gov Security Level: Email, Account Authentication (None) **Electronic Record and Signature Disclosure:**		

Signer Events	Signature	Timestamp
Accepted: 6/28/2021 | 01:03 PM ID: e796186e-c533-4a41-978c-34d69e29778a		

In Person Signer Events	Signature	Timestamp

Editor Delivery Events	Status	Timestamp
Records Division		Sent: 8/25/2025 | 09:33 AM

Signing Group: Records Division

Security Level: Email, Account Authentication (None)

Electronic Record and Signature Disclosure:
Not Offered via Docusign

Agent Delivery Events	Status	Timestamp

Intermediary Delivery Events	Status	Timestamp

Certified Delivery Events	Status	Timestamp

Carbon Copy Events	Status	Timestamp
Sherri Revis sherri.revis@chandleraz.gov Security Level: Email, Account Authentication (None) **Electronic Record and Signature Disclosure:** Not Offered via Docusign		

Witness Events	Signature	Timestamp

Notary Events	Signature	Timestamp

Envelope Summary Events	Status	Timestamps
Envelope Sent	Hashed/Encrypted	8/21/2025 | 10:40 AM
Envelope Updated	Security Checked	8/22/2025 | 11:14 AM
Envelope Updated	Security Checked	8/22/2025 | 11:14 AM
Envelope Updated	Security Checked	8/22/2025 | 11:14 AM
Envelope Updated	Security Checked	8/22/2025 | 11:14 AM
Envelope Updated	Security Checked	8/22/2025 | 11:14 AM
Envelope Updated	Security Checked	8/22/2025 | 11:14 AM

Payment Events	Status	Timestamps

Electronic Record and Signature Disclosure

ELECTRONIC RECORD AND SIGNATURE DISCLOSURE

From time to time, City of Chandler (we, us or Company) may be required by law to provide to you certain written notices or disclosures. Described below are the terms and conditions for providing to you such notices and disclosures electronically through the DocuSign system. Please read the information below carefully and thoroughly, and if you can access this information electronically to your satisfaction and agree to this Electronic Record and Signature Disclosure (ERSD), please confirm your agreement by selecting the check-box next to 'I agree to use electronic records and signatures' before clicking 'CONTINUE' within the DocuSign system.

Getting paper copies

At any time, you may request from us a paper copy of any record provided or made available electronically to you by us. You will have the ability to download and print documents we send to you through the DocuSign system during and immediately after the signing session and, if you elect to create a DocuSign account, you may access the documents for a limited period of time (usually 30 days) after such documents are first sent to you. After such time, if you wish for us to send you paper copies of any such documents from our office to you, you will be charged a $0.15 per-page fee. You may request delivery of such paper copies from us by following the procedure described below.

Withdrawing your consent

If you decide to receive notices and disclosures from us electronically, you may at any time change your mind and tell us that thereafter you want to receive required notices and disclosures only in paper format. How you must inform us of your decision to receive future notices and disclosure in paper format and withdraw your consent to receive notices and disclosures electronically is described below.

Consequences of changing your mind

If you elect to receive required notices and disclosures only in paper format, it will slow the speed at which we can complete certain steps in transactions with you and delivering services to you because we will need first to send the required notices or disclosures to you in paper format, and then wait until we receive back from you your acknowledgment of your receipt of such paper notices or disclosures. Further, you will no longer be able to use the DocuSign system to receive required notices and consents electronically from us or to sign electronically documents from us.

All notices and disclosures will be sent to you electronically

Unless you tell us otherwise in accordance with the procedures described herein, we will provide electronically to you through the DocuSign system all required notices, disclosures, authorizations, acknowledgements, and other documents that are required to be provided or made available to you during the course of our relationship with you. To reduce the chance of you inadvertently not receiving any notice or disclosure, we prefer to provide all of the required notices and disclosures to you by the same method and to the same address that you have given us. Thus, you can receive all the disclosures and notices electronically or in paper format through the paper mail delivery system. If you do not agree with this process, please let us know as described below. Please also see the paragraph immediately above that describes the consequences of your electing not to receive delivery of the notices and disclosures electronically from us.

How to contact City of Chandler:

You may contact us to let us know of your changes as to how we may contact you electronically, to request paper copies of certain information from us, and to withdraw your prior consent to receive notices and disclosures electronically as follows:
To contact us by email send messages to: esignature@chandleraz.gov

To advise City of Chandler of your new email address

To let us know of a change in your email address where we should send notices and disclosures electronically to you, you must send an email message to us at esignature@chandleraz.gov and in the body of such request you must state: your previous email address, your new email address. We do not require any other information from you to change your email address.

If you created a DocuSign account, you may update it with your new email address through your account preferences.

To request paper copies from City of Chandler

To request delivery from us of paper copies of the notices and disclosures previously provided by us to you electronically, you must send us an email to esignature@chandleraz.gov and in the body of such request you must state your email address, full name, mailing address, and telephone number. We will bill you for any fees at that time, if any.

To withdraw your consent with City of Chandler

To inform us that you no longer wish to receive future notices and disclosures in electronic format you may:

i. decline to sign a document from within your signing session, and on the subsequent page, select the check-box indicating you wish to withdraw your consent, or you may;

ii. send us an email to esignature@chandleraz.gov and in the body of such request you must state your email, full name, mailing address, and telephone number. We do not need any other information from you to withdraw consent.. The consequences of your withdrawing consent for online documents will be that transactions may take a longer time to process..

Required hardware and software

The minimum system requirements for using the DocuSign system may change over time. The current system requirements are found here: https://support.docusign.com/guides/signer-guide-signing-system-requirements.

Acknowledging your access and consent to receive and sign documents electronically

To confirm to us that you can access this information electronically, which will be similar to other electronic notices and disclosures that we will provide to you, please confirm that you have read this ERSD, and (i) that you are able to print on paper or electronically save this ERSD for your future reference and access; or (ii) that you are able to email this ERSD to an email address where you will be able to print on paper or save it for your future reference and access. Further, if you consent to receiving notices and disclosures exclusively in electronic format as described herein, then select the check-box next to 'I agree to use electronic records and signatures' before clicking 'CONTINUE' within the DocuSign system.

By selecting the check-box next to 'I agree to use electronic records and signatures', you confirm that:

- You can access and read this Electronic Record and Signature Disclosure; and
- You can print on paper this Electronic Record and Signature Disclosure, or save or send this Electronic Record and Disclosure to a location where you can print it, for future reference and access; and
- Until or unless you notify City of Chandler as described above, you consent to receive exclusively through electronic means all notices, disclosures, authorizations, acknowledgements, and other documents that are required to be provided or made available to you by City of Chandler during the course of your relationship with City of Chandler.

City Council Memorandum Human Resources Memo No. N/A

Date: September 15, 2025
To: Mayor and Council
Thru: John M. Pombier, Acting City Manager
Tadd Wille, Assistant City Manager
Kristin Maier, Acting Human Resources Director
From: Fernanda Acurio, Benefits & Compensation Manager
Subject: Agreement No. HR2-948-4453, Amendment No. 2, Group Medical and Pharmacy Program Administration

---

Proposed Motion:

Move City Council approve Agreement No. HR2-948-4453, Amendment No. 2, with Blue Cross Blue Shield of Arizona, for the administrative services agreement amendment for group medical and pharmacy program administration, for the period of one year, beginning January 1, 2026, through December 31, 2026.

Background/Discussion:

The city's medical benefit is reviewed throughout the year by staff in collaboration with the city-wide Healthcare Task Force, along with assistance from a benefits consulting firm. Since 2015, the city has offered three different plan options for employees to choose from: the Red, White, and Blue plans. The Red and Blue benefit plans include well-established benefit designs of co-insurance, deductibles, and out-of-pocket maximums. The White plan is a high-deductible health plan, which currently enrolls over 55% of city employees. No benefit plan designs will be made to the plans in 2026. All plans will continue to provide preventative services at 100% coverage, such as well woman, well man, and well baby visits. The contracted network and network discounts apply to all plans.

The pharmacy benefit will continue to operate with a co-pay feature immediately in the Red and Blue plans. The same co-pay structure is established in the White plan, but is not applicable until the employee has reached their deductible based on the legal requirements of the high-deductible plan.

There are no changes to medical premium contribution strategy in 2026.

Evaluation:

On October 27, 2022, City Council approved Agreement No. HR2-948-4453, with Blue Cross Blue Shield of Arizona, for group medical and pharmacy program administration, for a two-year period, with the option of up to three two-year extensions. On November 4, 2024, City Council approved Amendment No. 1, extending the agreement for a two-year period, January 1, 2026, through December 31, 2027. This amendment adopts the administrative services agreement amendment for the 2026 calendar year.

Financial Implications:

Account No.	Fund Name	Program Name	Dollar Amount	CIP Funded Y/N
741.1290.5219	Medical Self Insured	N/A	appx. 2,190,000	N

Fiscal Impact

Account No.	**Fund Name**	**Program Name**	**Dollar Amount**	**CIP Funded Y/N**
741.1290.5219.0.0.0	Medical Self Insurance	N/A	$2,190,000	N

Attachments

Amendment

Docusign Envelope ID: 271A5091-9365-4CBF-B4B4-F9BD9650AC8C

City Clerk Document No. _____

City Council Meeting Date: September 18, 2025

AMENDMENT TO CITY OF CHANDLER AGREEMENT
GROUP MEDICAL AND PHARMACY PROGRAM ADMINISTRATION
CITY OF CHANDLER AGREEMENT NO. HR2-948-4453

THIS AMENDMENT NO. 2 (Amendment No. 2) is made and entered into by and between the City of Chandler, an Arizona municipal corporation (City), and Blue Cross Blue Shield of Arizona, an Arizona non-profit corporation and an independent licensee of the Blue Cross Blue Shield Association (Contractor), (City and Contractor may individually be referred to as Party and collectively referred to as Parties) and made _____ , 2025 (Effective Date).

RECITALS

WHEREAS, the Parties entered into an agreement for group medical and pharmacy program administration (Agreement); and

WHEREAS, the term of the Agreement was January 1, 2023, through December 31, 2024, with the option of up to three two-year extensions; and

WHEREAS, the Parties through Amendment No. 1 exercised the first option to extend the Agreement for two years through December 31, 2026.

WHEREAS, the Parties wish to amend the Agreement to replace the 2025 Administrative Services Agreement Amendment with the Administrative Services Agreement Amendment for January 1, 2026, through December 31, 2026.

AGREEMENT

NOW THEREFORE, the Parties agree as follows:

1. The recitals are accurate and are incorporated and made a part of the Agreement by this reference.

Docusign Envelope ID: 271A5091-9365-4CBF-B4B4-F9BD9650AC8C

2. Exhibit F of the Agreement is replaced by the Administrative Services Agreement Amendment (ASA Amendment) effective January 1, 2026, through December 31, 2026, and associated documents which are attached as Exhibit A and made a part of this Amendment No. 2.

3. Section IV, Payment of Compensation and Fees, is amended to state: Contractor's compensation and fees as more fully described in Exhibit B of the Agreement and Exhibit A of this Amendment No. 2 for performance of the services approved and accepted by the City under this Agreement must not exceed $2,190,000 per year for the fixed cost of administrative and stop loss fees for the term of this Amendment No. 2.

5. All other terms and conditions of the Agreement remain unchanged and in full force and effect. If a conflict or ambiguity arises between this Amendment No. 2 and the Agreement, the terms and conditions in this Amendment No. 2 prevail and control.

IN WITNESS WHEREOF, the Parties have entered into this Amendment on the Effective Date.

FOR THE CITY

By: _____

Its: Mayor

FOR THE CONTRACTOR

By: Michael Groeger

Its: Vice President, Commercial Sales

APPROVED AS TO FORM:

By: _____

City Attorney RGL

ATTEST:

By: _____

City Clerk

EXHIBIT A
ASA AMENDMENT

Exhibit A

Legal Name of Group: CITY OF CHANDLER

Effective Date: 01/01/2026 - 12/31/2026	Group Number(s): 028399	Current Date: 8/13/2025
Strategic Rel. Executive: Christie Thomas	Funding: 12/24 Incurred ASC with Medical and Pharmacy	Days Notice: 240
Underwriter: Brian Cohen	Total Enrollment: 1,891	Specific Stop Loss Limit: $350,000
Broker: SEGAL COMPANY ARIZONA INC: RACHEL MARIE CALISI	Commission (% of Billed Rate): 0.000%	Aggregate Stop Loss Limit: 125%
Commission: 0.000%	Dental Coverage: No	

SOLD BENEFITS	Benefit Descriptions	Grandfathered Status
PPO 500 85 Red	INET: Ded $500/$1,000; 85%; OOP $2,500/$5,000; OV $25/$40; ER $100 Ded+85%; UC $50; Rx $10/$30/$50/$100 2x MOD; ONET: Ded $1,000/$2,000; 60%; OOP $5,000/$10,000	N: Non-Grandfathered
PPO 750 80 Blue	INET: Ded $750/$1,500; 80%; OOP $2,750/$5,500; OV/UC Ded+80%; ER $100 Ded+80%; Rx $10/$30/$50/$100 2x MOD; ONET: Ded $1,750/$3,500; 50%; OOP $6,500/$13,000	N: Non-Grandfathered
HSA 1750 85 White	INET: Ded $1,750/$3,500; 85%; OOP $3,500/$7,000; OV/ER/UC Ded+85%; Rx $10/$30/$50/$100 2x MOD; ONET: Ded $5,000/$10,000; 60%; OOP $10,000/$20,000	N: Non-Grandfathered

Sold Rates Effective 01/01/2026

PPO 500 85 Red	Enrollment	Admin	SSL $350K	ASL 125%	Commission	Other	Fixed Cost	ICAP	Exp Liab	Max Liab
Employee	214	$33.79	$97.47	$2.57	$0.00	$0.00	$133.83	$1,175.64	$1,074.34	$1,309.47
Employee + Spouse	171	$33.79	$97.47	$2.57	$0.00	$0.00	$133.83	$2,027.50	$1,755.83	$2,161.33
Employee + Child(ren)	95	$33.79	$97.47	$2.57	$0.00	$0.00	$133.83	$1,785.94	$1,562.58	$1,919.77
Employee + Family	222	$33.79	$97.47	$2.57	$0.00	$0.00	$133.83	$2,969.14	$2,509.14	$3,102.97
Total Plan 1	**702**	**$23,721**	**$68,424**	**$1,804**	**$0**	**$0**	**$93,949**	**$1,427,103**	**$1,235,630**	**$1,521,052**

PPO 750 80 Blue	Enrollment	Admin	SSL $350K	ASL 125%	Commission	Other	Fixed Cost	ICAP	Exp Liab	Max Liab
Employee	51	$33.79	$97.47	$2.57	$0.00	$0.00	$133.83	$1,151.05	$1,054.67	$1,284.88
Employee + Spouse	16	$33.79	$97.47	$2.57	$0.00	$0.00	$133.83	$1,985.13	$1,721.93	$2,118.96
Employee + Child(ren)	12	$33.79	$97.47	$2.57	$0.00	$0.00	$133.83	$1,748.64	$1,532.74	$1,882.47
Employee + Family	18	$33.79	$97.47	$2.57	$0.00	$0.00	$133.83	$2,907.13	$2,459.53	$3,040.96
Total Plan 2	**97**	**$3,278**	**$9,455**	**$249**	**$0**	**$0**	**$12,982**	**$163,778**	**$144,003**	**$176,759**

HSA 1750 85 White	Enrollment	Admin	SSL $350K	ASL 125%	Commission	Other	Fixed Cost	ICAP	Exp Liab	Max Liab
Employee	396	$33.79	$97.47	$2.57	$0.00	$0.00	$133.83	$913.08	$864.29	$1,046.91
Employee + Spouse	145	$33.79	$97.47	$2.57	$0.00	$0.00	$133.83	$1,574.72	$1,393.61	$1,708.55
Employee + Child(ren)	108	$33.79	$97.47	$2.57	$0.00	$0.00	$133.83	$1,387.09	$1,243.50	$1,520.92
Employee + Family	443	$33.79	$97.47	$2.57	$0.00	$0.00	$133.83	$2,306.06	$1,978.68	$2,439.89
Total Plan 3	**1,092**	**$36,899**	**$106,437**	**$2,806**	**$0**	**$0**	**$146,142**	**$1,761,304**	**$1,555,186**	**$1,907,447**

Sold CDH Account Pricing PEPM (Not Included Above)		PEPM Account Fee
HSA 1750 85 White	Health Savings Account	$2.70

CDH Annual Account Setup Fee (Not Included Above)	# of Accounts	Annual Fee
Annual account setup fee is billed by CDH and is based on the total number of HRA and FSA plans.	0 - 499	$250
	500 - 2,999	$500
	3,000 +	$1,500

Employers selecting Consumer-Directed Healthcare (CDH) Account Administration (including integration), for account types; HSA, HRA, FSA, DCFSA & LPFSA, hereby direct BCBSAZ to collect the administration fees and forward the proportional fees to HealthEquity for services, along with the required personal health information. BCBSAZ collects CDH Account administration fees and is not responsible for any reconciliation, recoupment or adjustments to payments received and forwarded to on behalf of Employer.

Employer agrees to pay for charges for CDH administration services. For HSA and HRAs, these charges apply to all employees enrolled in a health plan the group has paired with a CDH account. For FSAs, those charges apply to any employee for whom an FSA election has been sent to BCBSAZ by the employer.

			Monthly PEPM Fees				One-Time Fee /
Sharecare Account Summary	**Effective Date**	**Non-Enrollees**	**Employee**	**EE + Spouse**	**EE + Child(ren)**	**EE + Family**	**Non-Enrollees**
Basic	1/1/2026	No	$0.00	$0.00	$0.00	$0.00	$0

Proposed administration assumes BCBSAZ will retain Rx Rebates. In exchange for retaining Rx Rebates, BCBSAZ has adjusted the Admin PEPM by the Rx Rebate Credit. Rx Rebate Credit (PEPM) = $31.90. In addition to the Rx Rebate Credit (PEPM), BCBSAZ is also providing a rebate share agreement based on utilization of brand name drugs eligible for rebates. Please see the assumptions for details.

Premium tax is NOT included in the specific and aggregate charges.

Minimum Monthly Attachment Level: $3,016,966.

Fixed Expenses = Admin Charges + Stop Loss Premium + Commission (if applicable). Exp Liab = Fixed Expenses + ICAP/Aggregate Corridor. Max Liab = Fixed Expenses + ICAP.

$80,000 Wellness allowance, $100,000 Wellness allowance, $25,000 General Fund allowance, and $5,000 Other allowance are included. See Assumptions for details.

Administrative rate guarantee is included. Performance Guarantee is included. See Assumptions for details.

Mayo is not included as an in-network provider.

Consumer-Directed Healthcare (CDH) services were purchased and will be billed as an additional charge to the above premium rates. See the CDH rate exhibit for details.

Chiropractic Capitation: $2.93 PMPM. UM Services: excluded. Value Based Services: included.

Out-of-Network Shared Savings: 15% with $10,000 cap per claim.

Sharecare (Basic): included. See Assumptions for details.

Rx coverage through BCBSAZ: Yes. Rx applies to stop loss products: Yes.

Subrogation: Included.

Rx Formulary: Open.

BCBSAZ standard hourly rate for requests for information: $250/hour (no charge for first 5 hours).

All information from the exhibit Assumptions IASC-2026-028399-4, Administrative Summary, Guarantees and Disclosure of "Eligible Indirect Compensation" (Exhibit 1) incorporated herein by reference.Employer acknowledges electronic receipt of the Uniform Summaries of Benefits and Coverage (SBCs) for plans selected and the SBCs are incorporated herein by reference.

BCBSAZ reserves the right to adjust these premium rates retroactive to the first day of any billing month in which enrollment varies by more than fifteen percent (15%) from that listed above.

The ACA prohibits waiting periods in excess of 90 days. By signing below you represent that you do not impose a waiting period which is longer than 90 days and that you have made all necessary changes to bring all waiting periods for your plan into compliance with the ACA requirements. You agree to promptly advise BCBSAZ of any change which may impact the accuracy of this representation. You agree to provide BCBSAZ with timely and accurate information regarding enrollee effective dates and shall ensure such effective dates comply with applicable laws.

This Rate Acceptance Form must be signed and returned prior to BCBSAZ issuing ID Cards. If any information on this Form is inaccurate, please provide the correct information on this Form.

	8/13/2025		MAYOR	
BCBSAZ Representative	Date	Group Representative Signature	Group Representative Title	Date

APPROVED AS TO FORM:

By: _____
City Attorney

ATTEST:

By: _____
City Clerk

Certificate Of Completion

Envelope Id: 271A5091-9365-4CBF-B4B4-F9BD9650AC8C
Status: Sent
Subject: Complete with Docusign: 4453 CY2026 BCBS Amendment.pdf
EDMS Application: CC-AGRMTS
Source Envelope:
Document Pages: 4
Signatures: 1
Envelope Originator:
Certificate Pages: 5
Initials: 0
Christina Pryor
AutoNav: Enabled
PO Box 4008
EnvelopeId Stamping: Enabled
Chandler, 85244
Time Zone: (UTC-07:00) Arizona
Christina.Pryor@chandleraz.gov
IP Address: 198.241.2.1

Record Tracking

Status: Original
8/19/2025 | 04:25 PM
Holder: Christina Pryor
Christina.Pryor@chandleraz.gov
Location: DocuSign
Security Appliance Status: Connected
Pool: StateLocal
Storage Appliance Status: Connected
Pool: City of Chandler
Location: Docusign

Signer Events	Signature	Timestamp
Michael Groeger Michael.Groeger@azblue.com Vice President, Commercial Sales Security Level: Email, Account Authentication (None)	Michael Groeger Signature Adoption: Pre-selected Style Using IP Address: 204.153.155.151	Sent: 8/19/2025 | 04:40 PM Viewed: 8/19/2025 | 04:52 PM Signed: 8/19/2025 | 04:53 PM
Electronic Record and Signature Disclosure: Accepted: 8/19/2025 | 04:52 PM ID: cd0478ef-d655-4d6b-bf4b-fb5e503c2ea7		
Records Division		
Signing Group: Records Division Security Level: Email, Account Authentication (None) **Electronic Record and Signature Disclosure:** Not Offered via Docusign		
Roni Laxa Rowena.Laxa@chandleraz.gov Security Level: Email, Account Authentication (None) **Electronic Record and Signature Disclosure:** Accepted: 9/22/2021 | 09:44 AM ID: 840f9ca9-78aa-4caa-99bc-c4c879b2dd53		
Kevin Hartke kevin.hartke@chandleraz.gov Security Level: Email, Account Authentication (None) **Electronic Record and Signature Disclosure:** Accepted: 6/28/2021 | 11:17 AM ID: 2531f230-027c-41f7-9166-1189df6a8c8f		
Dana DeLong Dana.DeLong@chandleraz.gov Security Level: Email, Account Authentication (None) **Electronic Record and Signature Disclosure:**		

Signer Events	Signature	Timestamp
Accepted: 6/28/2021 | 01:03 PM ID: e796186e-c533-4a41-978c-34d69e29778a		

In Person Signer Events	Signature	Timestamp

Editor Delivery Events	Status	Timestamp
Records Division		Sent: 8/19/2025 | 04:53 PM

Signing Group: Records Division

Security Level: Email, Account Authentication (None)

Electronic Record and Signature Disclosure:
Not Offered via Docusign

Agent Delivery Events	Status	Timestamp

Intermediary Delivery Events	Status	Timestamp

Certified Delivery Events	Status	Timestamp

Carbon Copy Events	Status	Timestamp
Sherri Revis sherri.revis@chandleraz.gov Security Level: Email, Account Authentication (None) **Electronic Record and Signature Disclosure:** Not Offered via Docusign		

Witness Events	Signature	Timestamp

Notary Events	Signature	Timestamp

Envelope Summary Events	Status	Timestamps
Envelope Sent	Hashed/Encrypted	8/19/2025 | 04:40 PM

Payment Events	Status	Timestamps

Electronic Record and Signature Disclosure

ELECTRONIC RECORD AND SIGNATURE DISCLOSURE

From time to time, City of Chandler (we, us or Company) may be required by law to provide to you certain written notices or disclosures. Described below are the terms and conditions for providing to you such notices and disclosures electronically through the DocuSign system. Please read the information below carefully and thoroughly, and if you can access this information electronically to your satisfaction and agree to this Electronic Record and Signature Disclosure (ERSD), please confirm your agreement by selecting the check-box next to 'I agree to use electronic records and signatures' before clicking 'CONTINUE' within the DocuSign system.

Getting paper copies

At any time, you may request from us a paper copy of any record provided or made available electronically to you by us. You will have the ability to download and print documents we send to you through the DocuSign system during and immediately after the signing session and, if you elect to create a DocuSign account, you may access the documents for a limited period of time (usually 30 days) after such documents are first sent to you. After such time, if you wish for us to send you paper copies of any such documents from our office to you, you will be charged a $0.15 per-page fee. You may request delivery of such paper copies from us by following the procedure described below.

Withdrawing your consent

If you decide to receive notices and disclosures from us electronically, you may at any time change your mind and tell us that thereafter you want to receive required notices and disclosures only in paper format. How you must inform us of your decision to receive future notices and disclosure in paper format and withdraw your consent to receive notices and disclosures electronically is described below.

Consequences of changing your mind

If you elect to receive required notices and disclosures only in paper format, it will slow the speed at which we can complete certain steps in transactions with you and delivering services to you because we will need first to send the required notices or disclosures to you in paper format, and then wait until we receive back from you your acknowledgment of your receipt of such paper notices or disclosures. Further, you will no longer be able to use the DocuSign system to receive required notices and consents electronically from us or to sign electronically documents from us.

All notices and disclosures will be sent to you electronically

Unless you tell us otherwise in accordance with the procedures described herein, we will provide electronically to you through the DocuSign system all required notices, disclosures, authorizations, acknowledgements, and other documents that are required to be provided or made available to you during the course of our relationship with you. To reduce the chance of you inadvertently not receiving any notice or disclosure, we prefer to provide all of the required notices and disclosures to you by the same method and to the same address that you have given us. Thus, you can receive all the disclosures and notices electronically or in paper format through the paper mail delivery system. If you do not agree with this process, please let us know as described below. Please also see the paragraph immediately above that describes the consequences of your electing not to receive delivery of the notices and disclosures electronically from us.

How to contact City of Chandler:

You may contact us to let us know of your changes as to how we may contact you electronically, to request paper copies of certain information from us, and to withdraw your prior consent to receive notices and disclosures electronically as follows:
To contact us by email send messages to: esignature@chandleraz.gov

To advise City of Chandler of your new email address

To let us know of a change in your email address where we should send notices and disclosures electronically to you, you must send an email message to us at esignature@chandleraz.gov and in the body of such request you must state: your previous email address, your new email address. We do not require any other information from you to change your email address.

If you created a DocuSign account, you may update it with your new email address through your account preferences.

To request paper copies from City of Chandler

To request delivery from us of paper copies of the notices and disclosures previously provided by us to you electronically, you must send us an email to esignature@chandleraz.gov and in the body of such request you must state your email address, full name, mailing address, and telephone number. We will bill you for any fees at that time, if any.

To withdraw your consent with City of Chandler

To inform us that you no longer wish to receive future notices and disclosures in electronic format you may:

i. decline to sign a document from within your signing session, and on the subsequent page, select the check-box indicating you wish to withdraw your consent, or you may;

ii. send us an email to esignature@chandleraz.gov and in the body of such request you must state your email, full name, mailing address, and telephone number. We do not need any other information from you to withdraw consent.. The consequences of your withdrawing consent for online documents will be that transactions may take a longer time to process..

Required hardware and software

The minimum system requirements for using the DocuSign system may change over time. The current system requirements are found here: https://support.docusign.com/guides/signer-guide-signing-system-requirements.

Acknowledging your access and consent to receive and sign documents electronically

To confirm to us that you can access this information electronically, which will be similar to other electronic notices and disclosures that we will provide to you, please confirm that you have read this ERSD, and (i) that you are able to print on paper or electronically save this ERSD for your future reference and access; or (ii) that you are able to email this ERSD to an email address where you will be able to print on paper or save it for your future reference and access. Further, if you consent to receiving notices and disclosures exclusively in electronic format as described herein, then select the check-box next to 'I agree to use electronic records and signatures' before clicking 'CONTINUE' within the DocuSign system.

By selecting the check-box next to 'I agree to use electronic records and signatures', you confirm that:

- You can access and read this Electronic Record and Signature Disclosure; and
- You can print on paper this Electronic Record and Signature Disclosure, or save or send this Electronic Record and Disclosure to a location where you can print it, for future reference and access; and
- Until or unless you notify City of Chandler as described above, you consent to receive exclusively through electronic means all notices, disclosures, authorizations, acknowledgements, and other documents that are required to be provided or made available to you by City of Chandler during the course of your relationship with City of Chandler.

City Council Memorandum Law Memo No.

Date:	September 15, 2025
To:	Mayor and Council
From:	Kelly Schwab, City Attorney
Subject:	Opioid Settlements

Proposed Motion:

Move City Council authorize the City of Chandler's participation in any settlements with pharmaceutical companies related to the opioid epidemic and authorize the City Attorney or City Manager or his designee, after consultation with the City Attorney's Office, to complete all documentation, verify claims, and execute all releases and agreements on behalf of the city that are necessary to participate in opioid-related settlements.

Background/Discussion

For a number of years, there has been litigation on the national level regarding the harm incurred by governmental entities due to the distribution and use of opioids. As these lawsuits have progressed, various settlements have been and will be proposed involving multiple pharmaceutical companies. Cities are generally required to opt into settlements and submit documentation that often involves a release of claims in exchange for participating in the settlement and receiving settlement funds. Approval of this motion authorizes the city's participation in these settlements, including executing all releases and agreements on behalf of the City of Chandler. Settlement funds are generally distributed pursuant to the terms of One Arizona Opioid Settlement Memorandum of Understanding that was previously authorized and are to be used for opioid response and remediation of harmful impacts. Authorization for expenditure of the funds will be proposed to City Council via separate actions.

Staff recommends City Council authorize the City of Chandler's participation in settlements with pharmaceutical companies related to the opioid epidemic and authorize the City Attorney or City Manager or his designee, after consultation with

the City Attorney’s Office, to complete all documentation, verify claims, and execute all releases and agreements on behalf of the city that are necessary to participate in opioid-related settlements.

City Council Memorandum Law Memo No.

Date: September 15, 2025
To: Mayor and Council
From: Kelly Schwab, City Attorney
Subject: Settlement in Wakefield vs. City of Chandler, et al.

Proposed Motion:

Move City Council approve the settlement in the matter of Wakefield vs. City of Chandler, et al., in the amount of $45,000, in full and final settlement of all claims asserted without admitting liability, and to authorize the City Attorney to sign any necessary documents in such forms as are approved by the City Attorney to effectuate the terms and conditions of the settlement in this matter.

City Council Memorandum Law Memo No.

Date: September 15, 2025
To: Mayor and Council
From: Kelly Schwab, City Attorney
Subject: Settlement in Andres Ramirez, Jr., et al. vs. City of Chandler, et al.

Proposed Motion:

Move City Council approve the payment of the balance of its self-insured retention, in an amount up to $1,100,000 toward the full and final settlement of all claims against the city defendants in the matter of Andres Ramirez, Jr., et al. vs. City of Chandler, et al., CV2022-008776, without admitting liability, and to authorize the City Attorney to sign any necessary documents in such forms as are approved by the City Attorney to effectuate the terms and conditions of the settlement in this matter.

City Council Memorandum Management Services Memo No. 26-010

Date: September 15, 2025
To: Mayor and Council
Thru: John M. Pombier, Acting City Manager
Dawn Lang, Deputy City Manager - CFO
Kristi Smith, Management Services Director
From: Danielle Wells, Revenue and Tax Senior Manager
Subject: New License Series 10, Beer and Wine Store Liquor License Application for Andrea Dahlman Lewkowitz, Agent, Fortune Foods Arizona, Inc, DBA Seafood City Supermarket

---

Proposed Motion:

Move for recommendation to the State Department of Liquor Licenses and Control for approval of the State Liquor Job No. 354035, a Series 10, Beer and Wine Store Liquor License, for Andrea Dahlman Lewkowitz, Agent, Fortune Foods Arizona, Inc, DBA Seafood City Supermarket, located at 3177 W. Chandler Boulevard, Suite 200, and approval of the City of Chandler, Series 10, Beer and Wine Store Liquor License No. 310190.

Discussion:

This application for a liquor license was posted for hearing on September 18, 2025.

Staff requests a recommendation for this liquor license as the establishment does not have an interim liquor license permit with the Department of Liquor Licenses and Control (DLLC) and desires to begin serving alcohol. The DLLC allows 60 days for the City to provide a recommendation for a liquor license application. This recommendation for approval by the Local Governing Body will be within 60 days allowing the applicant to proceed with their new liquor license application process.

The Police Department reports no objections to the issuance of this license. With a Series 10, Beer and Wine Store Liquor License, the business may sell beer and wine only for off-premise consumption.

Attachments

A-Floor Plan

SEAFOOD CITY SUPERMARKET
3111 W CHANDLER BLVD #ANC04A
CHANDLER, AZ 85226
APPROX. 66,000 SF

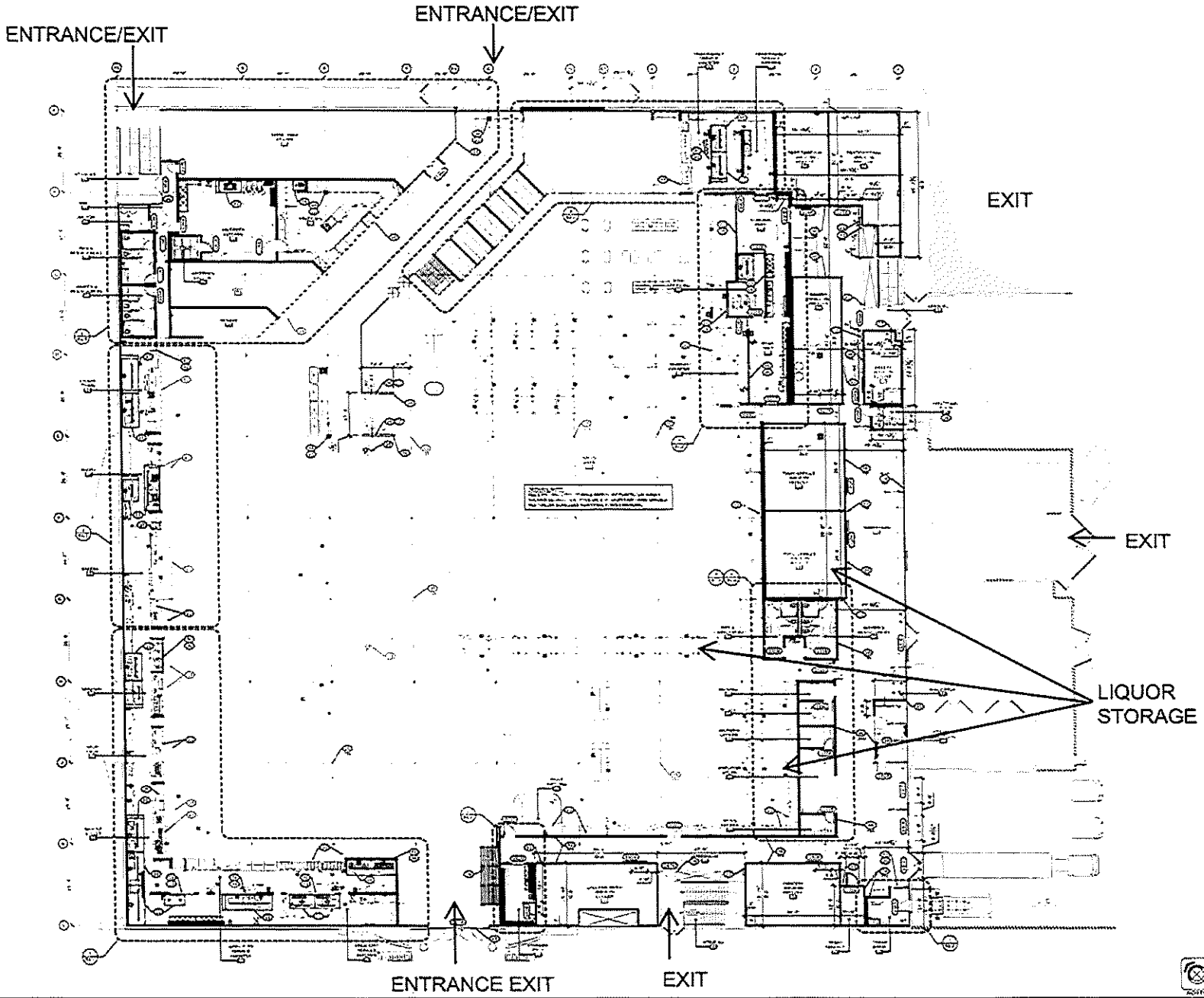

1 OVERALL FLOOR PLAN

KEYED NOTES

GENERAL NOTES

WALL TYPES

STUD WALL LIMITING HEIGHTS

HORIZONTAL STUD BRACING

WALL LEGEND

CT

CAMBURAS & THEODORE, LTD

SEAFOOD CITY

3111 CHANDLER VILLAGE DR.
CHANDLER, AZ 85226

24-82024

03-27-2025

FLOOR PLAN

A1.0

City Council Memorandum Management Services Memo No. 26-011

Date: September 15, 2025
To: Mayor and Council
Thru: John M. Pombier, Acting City Manager
Dawn Lang, Deputy City Manager - CFO
Kristi Smith, Management Services Director
From: Danielle Wells, Revenue and Tax Senior Manager
Subject: License Series 12, Restaurant Liquor License Application for Theresa June Morse, Agent, Best Pizza and Brew Chandler, LLC, DBA Best Pizza and Brew

---

Proposed Motion:

Move for recommendation to the State Department of Liquor Licenses and Control for approval of the State Liquor Job No. 355787, a Series 12, Restaurant Liquor License, for Theresa June Morse, Agent, Best Pizza and Brew Chandler, LLC, DBA Best Pizza and Brew, located at 290 S. Arizona Avenue, Suite B, and approval of the City of Chandler, Series 12, Restaurant Liquor License No. 310254.

Discussion:

This application for a liquor license was posted for hearing on September 18, 2025.

Staff requests a recommendation for this liquor license as the establishment does not have an interim liquor license permit with the Department of Liquor Licenses and Control (DLLC) and desires to begin serving alcohol. The DLLC allows 60 days for the City to provide a recommendation for a liquor license application. This recommendation for approval by the Local Governing Body will be within 60 days allowing the applicant to proceed with their new liquor license application process.

The Police Department reports no objections to the issuance of this license. With a Series 12, Restaurant Liquor License, the business may sell all liquors for on-premise consumption only, with a minimum of 40% of the gross receipts from the sale of food.

Attachments

A-Floor Plan

25HG 4 AM11:25 RZDLLC

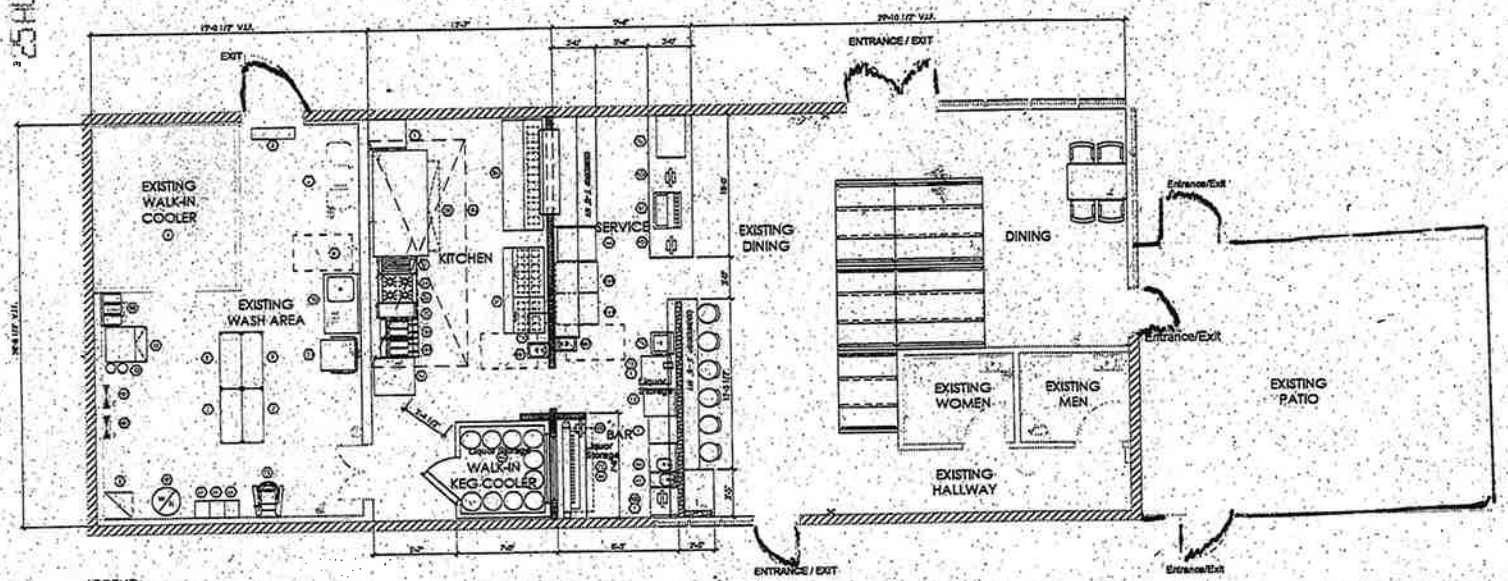

LEGEND:

- NEW 6" MIN. STUD WALL UP TO ROOF DECK
- NEW 6" MIN. STUD PLUMBING WALL
- NEW 3 1/2" WALL UP TO 6" ABOVE ADJACENT CEILING
- EXISTING MASONRY WALL
- EXISTING WALL
- EXISTING REMOVED
- NEW LOW WALL

- D EXISTING REMOVED
- E EXISTING
- NONE NEW
- R EXISTING RELOCATED
- NIC NOT IN CONTRACT
- VF VERIFY IN FIELD

- 110V RECEPTACLE
- DUPLEX RECEPTACLE
- DUPLEX RECEPTACLE 220V
- QUADPLEX RECEPTACLE
- TEL/DATA
- RECEPTACLE @ 44"
- COORDINATE RECEPTACLE HEIGHT
- J-BOX AT CEILING
- POWER POLE
- GROUND FAULT CIRCUIT INTERRUPTER (WET LOCATIONS)
- FLOOR SINK
- FLOOR DRAIN
- FIRE EXTINGUISHER
- ELEC PANEL
- EQUIPMENT SCHEDULE/NN
- DOOR SCHEDULE/NN

FLOOR PLAN

2,400 SQFT

EQUIPMENT SCHEDULE

	ITEM NAME	MFR.	MODEL #
1	STAINLESS STEEL TABLE	-	-
2	STORAGE SHELF	-	-
3	AIR CURTAIN	CURTRON	ABF-910
4	EXISTING WALK-IN COOLER	-	-
5	WALK-IN EZO COOLER	-	-
6	EXISTING MOP SINK	-	-
7	EXISTING 3 COMP SINK	-	-
8	PREP SINK	-	-
9	EXISTING HAND SINK	-	-
10	HAND SINK	GSW	HS-131-TSS
11	LOW-TEMP DISH WASHER	ECOLAB	ELT DISHMACHINE
12	WAVE WASHER	ECOLAB	SHLT-1
13	ELECTRIC PIZZA OVEN	PIZZAMASTER	PM SERIES
14	CHARBROILER	GSW	AESB-13
15	FRYER	FRYMASTER	GF14
16	RANGE	ROYAL	RMP-3-H
17	GRIDDLE	ROYAL	RMG-12
18	CHEF BASE	EVEREST	ECB32U
19	FOOD PREP TABLE	TRUE	TPP-44-SD-HC
20	FOOD PREP TABLE	TRUE	TSSU-72-30M-B-SHC
21	W/C FREEZER	CONTINENTAL	DF33SM-UC
22	BACKBAR COOLER	TRUE	TBB-24-72G-HC-LD
23	ICE MACHINE	MANITOWOC	IYT0330A/RIY0330A-261
24	UNDERBAR STORAGE CABINET	KEYSTONE	KB18-24SC
25	UNDERBAR HAND SINK	KEYSTONE	KB-18-1SDSF
26	WARMING CABINET	ALTO-SHAAM	1200-S
27	U/C REFRIGERATOR	EVEREST	ESR1
28	SODA DISPENSER	COCA-COLA	LIKEOP IN DISPENSER BV
29	BEER TAP	-	-
30	ICE BIN	KEYSTONE	KB18-18
31	LETTUCE CRISPER	SILVERKING	SK255
32	DOUGH MIXER	LINCOLN/MAO	-
33	PIZZA DISPLAY CASE	-	-
34	SODA GUN	-	-
35	BAG-IN-BOX	-	-
36	CO2	-	-
37	LOCKER	-	-
38	EXISTING ELECTRICAL PANEL	-	-
39	WATER HEATER	-	-
40	TYPE I HOOD	-	-

THIS DRAWING IS FOR THE PURPOSE OF DESIGN REVIEW ONLY AND IS NOT TO BE USED FOR CONSTRUCTION.

Esquire
ARCHITECTURE & PLANNING
SCOTTSDALE, AZ
602.818.1706

SCALE: 1/4"=1'-0"

BEST PIZZA
290 S. ARIZONA AVE. CHANDLER, AZ 85225
06.30.25

City Council Memorandum Management Services Memo No. 26-012

Date: September 15, 2025
To: Mayor and Council
Thru: John M. Pombier, Acting City Manager
Dawn Lang, Deputy City Manager - CFO
Kristi Smith, Management Services Director
From: Danielle Wells, Revenue and Tax Senior Manager
Subject: New License Series 12, Restaurant Liquor License Application for Edgar Eduardo Cortez Gonzalez, Agent, Sol Azteca Mexican Kitchen, LLC, DBA Sol Azteca Mexican Kitchen

---

Proposed Motion:

Move for recommendation to the State Department of Liquor Licenses and Control for approval of the State Liquor Job No. 334281, a Series 12, Restaurant Liquor License, for Edgar Eduardo Cortez Gonzalez, Agent, Sol Azteca Mexican Kitchen, LLC, DBA Sol Azteca Mexican Kitchen, located at 70 E. Riggs Road, Suite 3, and approval of the City of Chandler, Series 12, Restaurant Liquor License No. 310284.

Discussion:

This application for a liquor license was posted for hearing on September 18, 2025.

Staff requests a recommendation for this liquor license as the establishment does not have an interim liquor license permit with the Department of Liquor Licenses and Control (DLLC) and desires to begin serving alcohol. The DLLC allows 60 days for the City to provide a recommendation for a liquor license application. This recommendation for approval by the Local Governing Body will be within 60 days allowing the applicant to proceed with their new liquor license application process.

The Police Department reports no objections to the issuance of this license. With a Series 12, Restaurant Liquor License, the business may sell all liquors for on-premise consumption only, with a minimum of 40% of the gross receipts from

the sale of food.

Attachments

A-Floor Plan

'25 7 22 Liq. Dept AM 10:49

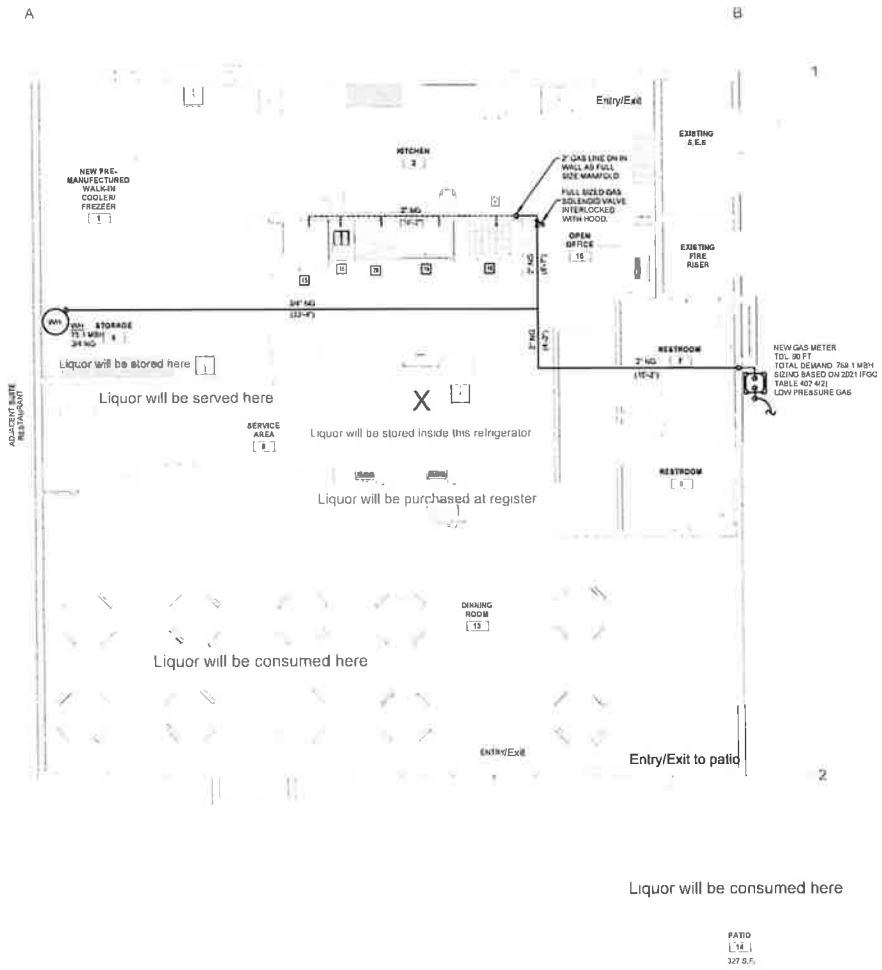

GAS PIPING NOTES

1. GAS PIPING ABOVE GRADE SHALL BE SCHEDULE 40 BLACK STEEL PIPE WITH MALLEABLE FITTINGS
2. GAS PIPING JOINTS MAY BE SCREWED FOR PIPE SIZES UP THROUGH TWO INCHES. LARGER PIPE SHALL BE WELDED
3. WHERE GAS PIPE CONNECTS TO EQUIPMENT IT SHALL BE PROVIDED WITH A DIRT LEG THE FULL SIZE OF THE RUNOUT A 100% SHUT-OFF VALVE AND A UNION.
4. ALL GAS LINE FLEXIBLE PIPE CONNECTORS SHALL BE CONSTRUCTED OF A ONE PIECE DESIGN AND SHALL BE UL AND CR AHJ APPROVED AS REQUIRED BY LOCAL AUTHORITIES.
5. ALL GAS PIPING ROUTED EXPOSED ACROSS OR ON EXTERIOR OR INTERIOR SURFACES OF BUILDING SHALL BE PRIMED AND PAINTED AFTER FINAL INSPECTIONS PER ARCHITECTURAL SPECIFICATIONS AND DIRECTIONS
6. PIPE SUPPORTS SHALL BE SPACED ACCORDING TO IFGC TABLE 415.1

*ALL GAS PIPING SHALL COMPLY WITH IPC AND IFGC FOR MATERIAL INSTALLATION AND TESTING

PIPING SUPPORT PER IFGC TABLE 415.1

STEEL PIPE NOMINAL SIZE OF PIPE (INCHES)	SPACING OF SUPPORTS (FEET)
1/2	6
3/4 OR 1	8
1-1/4 OR LARGER (HORIZONTAL)	10
1-1/4 OR LARGER (VERTICAL)	EVERY FLOOR LEVEL

NOMINAL SIZE OF TUBING (SMOOTH WALL) NOMINAL SIZE OF PIPE (INCHES OD.)	SPACING OF SUPPORTS (FEET)
1/2	4
5/8 OR 3/4	4
7/8 OR 1 (HORIZONTAL)	8
1 OR LARGER (VERTICAL)	EVERY FLOOR LEVEL

GAS CALCULATIONS

MARK	DESCRIPTION	QUANTITY	CFH INPUT EACH	CFH INPUT TOTAL
15	GAS CONV. OVEN	1	54	54
16	GAS FRYER	1	150	150
18	36" GAS RANGE	1	210	210
19	GAS GRIDDLE	1	120	120
20	CHARBROILER	1	160	160
WH	WATER HEATER	1	75.1	75.1
			TOTAL CFH	768.1
	PIPING TOTAL DEVELOPED LENGTH (FT)			85
	MINIMUM REQUIRED SUPPLY PRESSURE (IN-WC)			7

Joseph Osborn
Architect
C 408.686.6981
E josborn@jsquared-az.com
www.jsquared-az.com
JSQUARED ARCHITECTURE

CHANDLER ARIZONA

SOL AZTECA MEXICAN KITCHEN

70 E RIGGS RD, UNIT 3,
CHANDLER, AZ 85248.

SCALE: 1/8" = 1'

PLUMBING PLAN - NATURAL GAS
SCALE: 1/4" = 1'
1
P4

NORTH

11 25 24 - 1st CITY COMMENTS

JGGM ENGINEERING, LLC

Project Number	24018
Drawn By	MS
Date	11/12/2024
Sheet Name	PLUMBING PLAN - NATURAL GAS
Sheet Number	P4

City Council Memorandum City Clerk's Office Memo No. N/A

Date: September 15, 2025
To: Vice Mayor and City Council
From: Mayor Kevin Hartke
Subject: Resolution No. 5937, Setting the 2026 City Council Regular Meeting Schedule

---

Proposed Motion:

Move City Council pass and adopt Resolution No. 5937, approving the 2026 City Council Regular Meeting Schedule.

Background/Discussion

Section 2.12 of the City Charter requires the council to meet regularly at least twice in every month. In addition, Section 2-1 of the City Code requires the council to establish its regular meeting schedule by resolution.

Resolution No. 5937 proposes the City Council meeting schedule for the 2026 calendar year. The proposed schedule has been developed to minimize conflicts with holidays, major observances, and conferences. Meetings are scheduled to begin at 6:00 p.m. Special meetings may be called as necessary.

Attachments

Resolution No. 5937 - 2026 City Council Meeting Schedule

RESOLUTION NO. 5937

A RESOLUTION OF THE CITY COUNCIL OF THE CITY OF CHANDLER, ARIZONA SETTING FORTH THE DATES OF THE REGULAR MEETINGS OF THE CHANDLER CITY COUNCIL FOR THE 2026 CALENDAR YEAR.

WHEREAS, Section 2.12 of the City Charter and Section 2-1 of the City Code require the Chandler City Council to meet regularly at least twice each month; and

WHEREAS, due to conferences, vacation schedules and holidays, it is necessary to change the dates of certain regularly scheduled City Council meetings.

NOW, THEREFORE, BE IT RESOLVED that the City Council of the City of Chandler, Arizona, as follows:

Section 1. Sets the regular meeting dates of the Chandler City Council for the 2026 calendar year as listed in Exhibit A. Meetings will be scheduled to begin at 6:00 p.m. unless otherwise noted. Special meetings will be called as needed.

PASSED AND ADOPTED by the City Council of the City of Chandler, Arizona, this _____ day of September 2025.

ATTEST:

_____ _____

CITY CLERK MAYOR

CERTIFICATION

I HEREBY CERTIFY that the above and foregoing Resolution No. 5937 was duly passed and adopted by the City Council of the City of Chandler, Arizona, at a regular meeting held on the ____ day of September 2025, and that a quorum was present thereat.

_____

CITY CLERK

APPROVED AS TO FORM:

_____

CITY ATTORNEY

Resolution No. 5937, Exhibit A
2026 City Council Meeting Dates

Study Session	Regular Meeting
January 5, 2026	January 8, 2026
No Study Session - MLK Jr. Holiday	January 22, 2026
February 2, 2026	February 5, 2026
February 23, 2026	February 26, 2026
	*March 23, 2026 Regular & Study Session
	March 26, 2026
April 6, 2026	April 9, 2026
April 20, 2026	April 23, 2026
May 4, 2026	May 7, 2026
May 18, 2026	May 21, 2026
June 8, 2026	June 11, 2026
June 22, 2026	June 25, 2026
	*July 13, 2026 Regular & Study Session
	July 16, 2026
	*August 10, 2026 Regular & Study Session
	August 13, 2026
	*September 14, 2026 Regular & Study Session
	September 17, 2026
	*October 12, 2026 Regular & Study Session
	October 15, 2026
	*November 9, 2026 Regular & Study Session
	November 12, 2026
	*December 7, 2026 Regular & Study Session
	December 10, 2026

*During the weeks identified, when two regular meetings are scheduled, a Study Session will be held following Monday's Regular meeting to review items that will be presented and acted upon at Thursday's Regular meeting

City Council Memorandum Neighborhood Resources Memo No. N/A

Date: September 15, 2025
To: Mayor and Council
Thru: John M. Pombier, Acting City Manager
Tadd Wille, Assistant City Manager
Riann Balch, Acting Neighborhood Resources Director
From: Riann Balch, Community Resources Manager
Subject: Approval of Hotel Agreements for Operation Open Door Non-Congregate Shelter Program - Extensions with GAJANAN, LLC ($450,000) and Metro Zona Hospitality, LLC ($525,000)

Proposed Motion:

Move City Council approve Agreement No. 4638, Amendment No. 2, with GAJANAN, LLC, in an amount not to exceed $450,000, for the term beginning October 1, 2025, through June 30, 2026, and Agreement No. 4758, Amendment No. 3, with Metro Zona Hospitality, LLC, in an amount not to exceed $525,000, for the term beginning July 1, 2025, through June 30, 2026.

Background/Discussion:

Operation Open Door provides non-congregate emergency shelter and bridge housing via hotel/motel rooms to Chandler residents experiencing homelessness who are unable to utilize congregate shelter due to capacity limits, mobility limitations, sobriety requirements, behavioral expectations, or household composition. Vulnerable populations include families with children, older adults and persons with disabilities. Program participants receive intensive case management services and essential resources such as food and clothing through Chandler's Community Navigation Team. The goal for each participant household is to exit directly to permanent housing or a longer-term program that provides a transition to permanency.

Non-congregate shelter is recognized nationally and internationally as a best practice in ending homelessness. The non-congregate model allows providers to serve high-barrier populations that are not well served in congregate settings.

Persons with multiple barriers utilize the highest percentage of public resources when living without shelter. Other essential elements of non-congregate programs include the ability to accommodate partners and pets, a safe place to store belongings, and a place to refrigerate food and medications.

Operation Open Door operates 15 one-bedroom units and 10 two-bedroom units each night. Requests for services, particularly from families with minor children and older adults, continue to increase with the rising number of evictions. Contracts allow the program to ensure room availability without being subject to market rates which fluctuate significantly based on consumer demand, seasonal attractions and large commercial events. Contracts have alos allowed the City to build positive relationships with partnering vendors and neighboring communities.

The agreement with GAJANAN, LLC will continue to provide a block of 15 rooms of various sizes and configurations for a flat fee of $48,000 per month, or $105.21 per night. The rate is paid regardless of whether the rooms are utilized, but the vacancy rate is extremely low. The program also makes two rooms in the community available each night to the Police and Fire departments for persons they may encounter responding to calls for service. Additional funds are available in the agreement to reimburse the property owner for excessive damages.In the previous one-year contract period, the not-to-exceed amount was $600,000; actual expenditures was $583,543.83.

The agreement with Metro Zona Hospitality, LLC secures an additional 10 two-bedroom units at a flat fee of $42,580, or $139.99 per night. These units are equipped with small kitchenettes to allow families to store and prepare food. In the previous one-year contract period, the not-to-exceed amount was $525,000; actual expenditures was $511,175.

Evaluation:

On October 19, 2023, City Council approved Agreement No. 4638, GAJANAN, LLC, for temporary accommodations, for a one-year period, with the option of up to four one-year extensions. The contractor has agreed to extend the agreement for the term of October 1, 2025, through June 30, 2026, under the same terms, conditions, and pricing. This time period aligns the contract with a fiscal year cycle.

On April 4, 2024, City Council approved Agreement No. 4758, with Metro Zona Hospitality, LLC, dba Aligned Hospitality Management, LLC, for temporary accommodations, for a one-year period, with the option of up to four one-year extensions. As of May, 2025, Aligned Hospitality Management, LLC no longer manages the property and the agreement was assigned through Amendment No.

2 to Metro Zona Hospitality, LLC. The contractor has agreed to extend the agreement for the term of July 1, 2025, through June 30, 2026, under the same terms, conditions, and pricing.

Staff recommends the extension of these agreements.

Financial Implications:

Operation Open Door was initiated with American Rescue Plan Act (ARPA) and CARES Act funds made available to address the negative socioeconomic impacts of the COVID-19 pandemic. Since FY 2022-2023, the city has supported the program through General Funds at varying levels. In Fiscal Year 2025-2026, $1,295,000 of one-time General Funds was allocated for the program.

Fiscal Impact

Account No.	Fund Name	Program Name	Dollar Amount	CIP Funded Y/N
101.4700.5514.0.0	General Fund	n/a	975,000	N

Attachments

4758 Amendment

4638 Amendment

Docusign Envelope ID: 30D9CB75-E6BB-4F76-808C-FAC24D93EEF3

City Clerk Document No. _____

City Council Meeting Date: September 18, 2025

AMENDMENT TO CITY OF CHANDLER AGREEMENT
TEMPORARY ACCOMMODATIONS
CITY OF CHANDLER AGREEMENT NO. 4758

THIS AMENDMENT NO. 3 (Amendment No. 3) is made and entered into by and between the City of Chandler, an Arizona municipal corporation (City), and Metro Zona Hospitality LLC (Contractor), (City and Contractor may individually be referred to as Party and collectively referred to as Parties) and made _____ , 2025 (Effective Date).

RECITALS

WHEREAS, the Parties entered into an agreement for temporary accommodations (Agreement); and

WHEREAS, the term of the Agreement was April 15, 2024, through April 14, 2025, with the option of up to four one-year extensions; and

WHEREAS, the Parties extended the Agreement for the period of April 15, 2025, through June 30, 2025, through Amendment No. 1; and

WHEREAS, the Parties wish to extend the Agreement for the period of July 1, 2025, through June 30, 2026, through this Amendment.

AGREEMENT

NOW THEREFORE, the Parties agree as follows:

1. The recitals are accurate and are incorporated and made a part of the Agreement by this reference.

2. Section III is amended to read as follows: The Agreement is extended for the period of July 1, 2025, through June 30, 2026.

3. Section IV is amended to read as follows: The City will pay the Contractor the per unit cost set

forth in Exhibit B of the original Agreement, which is incorporated into and made a part of this Amendment No. 3 by reference. Total payments made to the Contractor during the term of this Amendment No. 3 will not exceed $525,000.

4. All other terms and conditions of the Agreement remain unchanged and in full force and effect. If a conflict or ambiguity arises between this Amendment No. 3 and the Agreement, the terms and conditions in this Amendment No. 3 prevail and control.

IN WITNESS WHEREOF, the Parties have entered into this Amendment on the Effective Date.

FOR THE CITY

By: _____

Its: Mayor

FOR THE CONTRACTOR

By: Serge Shukat

Its: Owner

APPROVED AS TO FORM:

By: _____

City Attorney DMB

ATTEST:

By: _____

City Clerk

Certificate Of Completion

Envelope Id: 30D9CB75-E6BB-4F76-808C-FAC24D93EEF3
Status: Sent
Subject: Complete with Docusign: 4758 Amendment 3.pdf
EDMS Application: CC-AGRMTS
Source Envelope:
Document Pages: 2
Signatures: 1
Certificate Pages: 5
Initials: 0
AutoNav: Enabled
EnvelopeId Stamping: Enabled
Time Zone: (UTC-07:00) Arizona

Envelope Originator:
Christina Pryor
PO Box 4008
Chandler, 85244
Christina.Pryor@chandleraz.gov
IP Address: 198.241.2.1

Record Tracking

Status: Original
8/18/2025 | 02:33 PM
Security Appliance Status: Connected
Storage Appliance Status: Connected

Holder: Christina Pryor
Christina.Pryor@chandleraz.gov
Pool: StateLocal
Pool: City of Chandler

Location: DocuSign

Location: Docusign

Signer Events	Signature	Timestamp
Serge Shukat sfcgee@gmail.com Owner Zona Multifamily Security Level: Email, Account Authentication (None)	Serge Shukat Signature Adoption: Pre-selected Style Using IP Address: 2600:8800:6201:2df0:2400:2a0:8abd:8da4	Sent: 8/18/2025 | 02:37 PM Viewed: 8/19/2025 | 12:58 PM Signed: 8/19/2025 | 12:59 PM
Electronic Record and Signature Disclosure: Accepted: 8/19/2025 | 12:58 PM ID: 7d6ba3e8-79a2-46c9-83b6-efb24a957757		
Records Division Signing Group: Records Division Security Level: Email, Account Authentication (None) **Electronic Record and Signature Disclosure:** Not Offered via Docusign		
Daniel Brown Daniel.Brown@chandleraz.gov Security Level: Email, Account Authentication (None) **Electronic Record and Signature Disclosure:** Accepted: 7/1/2021 | 08:17 AM ID: 563d172a-e614-4b9b-b2a1-61a0afc8280a		
Kevin Hartke kevin.hartke@chandleraz.gov Security Level: Email, Account Authentication (None) **Electronic Record and Signature Disclosure:** Accepted: 6/28/2021 | 11:17 AM ID: 2531f230-027c-41f7-9166-1189df6a8c8f		
Dana DeLong Dana.DeLong@chandleraz.gov Security Level: Email, Account Authentication (None) **Electronic Record and Signature Disclosure:**		

Signer Events	Signature	Timestamp
Accepted: 6/28/2021 | 01:03 PM ID: e796186e-c533-4a41-978c-34d69e29778a		

In Person Signer Events	Signature	Timestamp

Editor Delivery Events	Status	Timestamp
Records Division		Sent: 8/19/2025 | 12:59 PM

Signing Group: Records Division

Security Level: Email, Account Authentication (None)

Electronic Record and Signature Disclosure:
Not Offered via Docusign

Agent Delivery Events	Status	Timestamp

Intermediary Delivery Events	Status	Timestamp

Certified Delivery Events	Status	Timestamp

Carbon Copy Events	Status	Timestamp

Security Level: Email, Account Authentication (None)

Electronic Record and Signature Disclosure:
Not Offered via Docusign

Witness Events	Signature	Timestamp

Notary Events	Signature	Timestamp

Envelope Summary Events	Status	Timestamps
Envelope Sent	Hashed/Encrypted	8/18/2025 | 02:37 PM

Payment Events	Status	Timestamps

Electronic Record and Signature Disclosure

ELECTRONIC RECORD AND SIGNATURE DISCLOSURE

From time to time, City of Chandler (we, us or Company) may be required by law to provide to you certain written notices or disclosures. Described below are the terms and conditions for providing to you such notices and disclosures electronically through the DocuSign system. Please read the information below carefully and thoroughly, and if you can access this information electronically to your satisfaction and agree to this Electronic Record and Signature Disclosure (ERSD), please confirm your agreement by selecting the check-box next to 'I agree to use electronic records and signatures' before clicking 'CONTINUE' within the DocuSign system.

Getting paper copies

At any time, you may request from us a paper copy of any record provided or made available electronically to you by us. You will have the ability to download and print documents we send to you through the DocuSign system during and immediately after the signing session and, if you elect to create a DocuSign account, you may access the documents for a limited period of time (usually 30 days) after such documents are first sent to you. After such time, if you wish for us to send you paper copies of any such documents from our office to you, you will be charged a $0.15 per-page fee. You may request delivery of such paper copies from us by following the procedure described below.

Withdrawing your consent

If you decide to receive notices and disclosures from us electronically, you may at any time change your mind and tell us that thereafter you want to receive required notices and disclosures only in paper format. How you must inform us of your decision to receive future notices and disclosure in paper format and withdraw your consent to receive notices and disclosures electronically is described below.

Consequences of changing your mind

If you elect to receive required notices and disclosures only in paper format, it will slow the speed at which we can complete certain steps in transactions with you and delivering services to you because we will need first to send the required notices or disclosures to you in paper format, and then wait until we receive back from you your acknowledgment of your receipt of such paper notices or disclosures. Further, you will no longer be able to use the DocuSign system to receive required notices and consents electronically from us or to sign electronically documents from us.

All notices and disclosures will be sent to you electronically

Unless you tell us otherwise in accordance with the procedures described herein, we will provide electronically to you through the DocuSign system all required notices, disclosures, authorizations, acknowledgements, and other documents that are required to be provided or made available to you during the course of our relationship with you. To reduce the chance of you inadvertently not receiving any notice or disclosure, we prefer to provide all of the required notices and disclosures to you by the same method and to the same address that you have given us. Thus, you can receive all the disclosures and notices electronically or in paper format through the paper mail delivery system. If you do not agree with this process, please let us know as described below. Please also see the paragraph immediately above that describes the consequences of your electing not to receive delivery of the notices and disclosures electronically from us.

How to contact City of Chandler:

You may contact us to let us know of your changes as to how we may contact you electronically, to request paper copies of certain information from us, and to withdraw your prior consent to receive notices and disclosures electronically as follows:
To contact us by email send messages to: esignature@chandleraz.gov

To advise City of Chandler of your new email address

To let us know of a change in your email address where we should send notices and disclosures electronically to you, you must send an email message to us at esignature@chandleraz.gov and in the body of such request you must state: your previous email address, your new email address. We do not require any other information from you to change your email address.

If you created a DocuSign account, you may update it with your new email address through your account preferences.

To request paper copies from City of Chandler

To request delivery from us of paper copies of the notices and disclosures previously provided by us to you electronically, you must send us an email to esignature@chandleraz.gov and in the body of such request you must state your email address, full name, mailing address, and telephone number. We will bill you for any fees at that time, if any.

To withdraw your consent with City of Chandler

To inform us that you no longer wish to receive future notices and disclosures in electronic format you may:

i. decline to sign a document from within your signing session, and on the subsequent page, select the check-box indicating you wish to withdraw your consent, or you may;

ii. send us an email to esignature@chandleraz.gov and in the body of such request you must state your email, full name, mailing address, and telephone number. We do not need any other information from you to withdraw consent.. The consequences of your withdrawing consent for online documents will be that transactions may take a longer time to process..

Required hardware and software

The minimum system requirements for using the DocuSign system may change over time. The current system requirements are found here: https://support.docusign.com/guides/signer-guide-signing-system-requirements.

Acknowledging your access and consent to receive and sign documents electronically

To confirm to us that you can access this information electronically, which will be similar to other electronic notices and disclosures that we will provide to you, please confirm that you have read this ERSD, and (i) that you are able to print on paper or electronically save this ERSD for your future reference and access; or (ii) that you are able to email this ERSD to an email address where you will be able to print on paper or save it for your future reference and access. Further, if you consent to receiving notices and disclosures exclusively in electronic format as described herein, then select the check-box next to 'I agree to use electronic records and signatures' before clicking 'CONTINUE' within the DocuSign system.

By selecting the check-box next to 'I agree to use electronic records and signatures', you confirm that:

- You can access and read this Electronic Record and Signature Disclosure; and
- You can print on paper this Electronic Record and Signature Disclosure, or save or send this Electronic Record and Disclosure to a location where you can print it, for future reference and access; and
- Until or unless you notify City of Chandler as described above, you consent to receive exclusively through electronic means all notices, disclosures, authorizations, acknowledgements, and other documents that are required to be provided or made available to you by City of Chandler during the course of your relationship with City of Chandler.

City Clerk Document No. _____

City Council Meeting Date: September 18, 2025

AMENDMENT TO CITY OF CHANDLER AGREEMENT
TEMPORARY ACCOMMODATION SERVICES
CITY OF CHANDLER AGREEMENT NO. 4638

THIS AMENDMENT NO. 2 (Amendment No. 2) is made and entered into by and between the City of Chandler, an Arizona municipal corporation (City), and GAJANAN LLC (Contractor), (City and Contractor may individually be referred to as Party and collectively referred to as Parties) and made _____, 2025 (Effective Date).

RECITALS

WHEREAS, the Parties entered into an agreement for temporary accommodation services (Agreement); and

WHEREAS, the term of the Agreement was October 1, 2023, through September 30, 2024, with the option of up to four one-year extensions; and

WHEREAS, the Parties wish to exercise the second option through this Amendment to extend the Agreement.

AGREEMENT

NOW THEREFORE, the Parties agree as follows:

1. The recitals are accurate and are incorporated and made a part of the Agreement by this reference.

2. Section III is amended to read as follows: The Agreement is extended for the period of October 1, 2025, through June 30, 2026.

3. Section IV is amended to read as follows: The City will pay the Contractor the per unit cost set forth in Exhibit B of the original Agreement, which is incorporated into and made a part of this Amendment No. 2 by reference. Total payments made to the Contractor during the term of this Amendment No. 2 will not exceed $450,000.

4. All other terms and conditions of the Agreement remain unchanged and in full force and effect. If a conflict or ambiguity arises between this Amendment No. 2 and the Agreement, the terms and conditions in this Amendment No. 2 prevail and control.

IN WITNESS WHEREOF, the Parties have entered into this Amendment on the Effective Date.

FOR THE CITY	**FOR THE CONTRACTOR**
By: _____	By: _____
Its: Mayor	Its: NAIMESH PATEL

APPROVED AS TO FORM:

By: _____
City Attorney

ATTEST:

By: _____
City Clerk

City Council Memorandum **Police Memo No.** 25-078

Date: September 15, 2025
To: Mayor and Council
Thru: John Pombier, Acting City Manager
Tadd Willie, Assistant City Manager
Bryan Chapman, Chief of Police
From: Jason Sieczkowski, Assistant Police Chief
Subject: Intergovernmental Agreement Between Chandler PD and Maricopa County Regarding Sworn Officer and Detention Officer Training Academy

---

Proposed Motion:

Move City Council pass and adopt Resolution No. 5931 authorizing an Intergovernmental Agreement (IGA) with Maricopa County by and through the Maricopa County Sheriff's Office; authorizing the Mayor to sign the IGA; and authorizing the Chief of Police to administer, execute, and submit the Agreement and all documents and other necessary instruments in connection with such Agreement

Background/Discussion:

The Chandler Police Department (CPD) is requesting approval to enter into an Intergovernmental Agreement (IGA) with Maricopa County, by and through the Maricopa County Sheriff's Office (MCSO), for participation in Sworn Officer and Detention Officer Training Academies as needed.

To expand recruitment efforts and broaden the applicant pool, CPD seeks to maintain the option to hire uncertified police officers and detention officers who would then attend and become certified through MCSO's academies. MCSO conducts these academies on a regular basis and typically has capacity for additional participants.

This partnership provides several benefits: it strengthens CPD's working relationship with MCSO, increases the applicant pool for both sworn and detention positions, and ensures access to quality training at a reasonable cost. The current

staff allotment for the Detention Unit is 14 Detention Officers and 3 Sergeants, for a total of 17 positions. The academy is 12 weeks in length.

Financial Implications:

The registration fee is $750 per participant in the Sworn Academy and $250 per participant in the Detention Academy. The department has ongoing operating budget designated for academy costs.

Attachments

Resolution 5931 - MCSO Officer and Detention Academy

MSCO Officer and Detention Officer Training IGA

RESOLUTION NO. 5931

A RESOLUTION OF THE CITY COUNCIL OF THE CITY OF CHANDLER, ARIZONA AUTHORIZING AND APPROVING AN INTERGOVERNMENTAL AGREEMENT BETWEEN THE CITY OF CHANDLER AND MARICOPA COUNTY, ON BEHALF OF THE MARICOPA COUNTY SHERIFF'S OFFICE, AUTHORIZING CHANDLER POLICE DEPARTMENT'S PARTICIPATION IN MARICOPA COUNTY SHERIFF'S OFFICE'S SWORN AND DETENTION BASIC TRAINING ACADEMY.

WHEREAS, Maricopa County, on behalf of the Maricopa County Sheriff's Office ("MCSO") conducts sworn Arizona Peace Officers Standard Training and Detention Officer Training Academies on an as-needed basis; and

WHEREAS, the Chandler Police Department's sworn and detention recruits are required to be formally trained in an acceptable training program, and MCSO has sufficient space for additional participants to provide said training; and

WHEREAS, the City of Chandler, through its Police Department, wishes to participate in MCSO's Sworn and Detention Officer Training Academies for the initial term of July 1, 2025 through June 30, 2027.

NOW, THEREFORE, BE IT RESOLVED by the City Council of the City of Chandler, Arizona, as follows:

Section 1. Approving the Intergovernmental Agreement between the City of Chandler and Maricopa County, on behalf of the Maricopa County Sheriff's Office, for an initial term of July 1, 2025 through June 30, 2027.

Section 2. Authorizing the Mayor to execute the Intergovernmental Agreement on behalf of the City of Chandler.

Section 3. Authoring City staff to perform all acts necessary to give effect to this Resolution and comply with the terms of the Intergovernmental Agreement.

PASSED AND ADOPTED by the City Council of the City of Chandler, Arizona, this _____ day of September 2025.

ATTEST:

_____ _____

CITY CLERK MAYOR

CERTIFICATION

I HEREBY CERTIFY that the above and foregoing Resolution No. 5931 was duly passed and adopted by the City Council of Chandler, Arizona, at a regular meeting held on the _____ day of _____ 2025.

_____
CITY CLERK

APPROVED AS TO FORM:

_____
CITY ATTORNEY EPW

INTERGOVERNMENTAL AGREEMENT BETWEEN
CHANDLER PD
AND MARICOPA COUNTY
REGARDING SWORN AND DETENTION
BASIC TRAINING ACADEMY
C-50-26-_____-x-00

This INTERGOVERNMENTAL AGREEMENT (IGA) is entered into by and between MARICOPA COUNTY, a political subdivision of the State of Arizona on behalf of the SHERIFF'S OFFICE, "MCSO," and the CITY OF CHANDLER, on behalf of the POLICE DEPARTMENT, "Chandler PD," collectively referred to as the Parties. Under A.R.S. § 11-952, which authorizes public agencies to enter into Intergovernmental Agreements, the Parties enter into this IGA regarding CHANDLER PD's participation in MCSO's Sworn and Detention Basic Training Academy.

RECITALS

Whereas MCSO conducts Sworn (Arizona Peace Officers Standard Training) and Detention Officer Training Academies on an as-needed basis and regularly has sufficient space for additional participants, and whereas the Chandler PD law enforcement and detention recruits are required to be formally trained in an acceptable training program, the Parties enter into this IGA.

AGREEMENT

This IGA shall have a term beginning July 1, 2025 through June 30, 2027, the Initial Term, upon the Parties' approval.

MCSO will:

1. Provide training space as available for CHANDLER PD recruit officers to attend scheduled Sworn Basic Training Academies or Detention Academies.

2. Reserve the right in its sole discretion to decide whether the CHANDLER PD recruits maintain the academic standings necessary to continue in the Academy class.

3. Retain the right, in its sole discretion, to dismiss any recruit for training, academic, ethical or disciplinary standards applicable to all sworn officer training academy participants or detention academy participants.

4. Provide CHANDLER PD original individual training records for each CHANDLER PD recruit upon completion of the MCSO Academy or termination of the recruit's attendance at the MCSO Academy; and maintain records of lesson plans, class rosters, and other documentation common to the class as a whole consistent with the requirements of State law.

5. Treat CHANDLER PD recruits in the same manner as MCSO recruits for purposes of training, academics, ethics and discipline.

6. Require CHANDLER PD to investigate CHANDLER PD recruits should a situation arise for an Internal Affairs Investigation concerning the actions of an CHANDLER PD recruit.

7. Bill/Invoice CHANDLER PD Department a non-refundable registration fee per participant as follows:

   Sworn Academy: $750

   Detention Academy: $250

   Amounts are payable to Maricopa County, per CHANDLER PD registrant after the first full day of the academy.

8. Review its costs annually and as needed process amendments to this Agreement for future increases not later than April of each fiscal year, to be effective with the new fiscal year.

Chandler PD will:

1. Accept that there is no guarantee that any minimum number of candidates from the CHANDLER PD PD will be accepted to attend the academy, because enrollment is based MCSO's determination of appropriate space/resource availability and because MCSO candidates have enrollment priority.

2. Understand and agree that the curriculum will consist of the standard MCSO training program for MCSO, including MCSO's policies and procedures.

3. Agree to pay amounts per registrant cited in 7., above to MCSO within 30 days of receipt of invoice and make amounts payable to Maricopa County, referencing "MCSO Training Academy" in the transaction detail/memo line.

4. Provide worker's compensation insurance, salary, benefits, for CHANDLER PD recruits.

5. Provide applicable items including weapons, ammunition and uniforms for CHANDLER PD recruits depending on the requirements for the designated academy, sworn basic training or detention basic training.

6. Pay for all employer related costs for its employees as acknowledged in Section 3. below.

7. Review its costs annually and as needed process amendments to this Agreement for future increases not later than April of each fiscal year, to be effective with the new fiscal year.

The Parties agree:

1. Each Party (as "indemnitor") agrees to indemnify, defend, and hold harmless the other Party (as "indemnitee") from and against any and all claims, losses, liability, costs, or expenses (including reasonable attorney's fees) (hereinafter collectively referred to as "claims") arising out of the negligent performance of this IGA, but only to the extent that such claims which result in vicarious/derivative liability to the indemnitee are caused by the act, omission, negligence, misconduct, or other fault of the indemnitor, its officers, officials, agents, employees, or volunteers.

2. This Agreement is not intended to constitute, create, give rise to, or otherwise recognize a joint venture agreement, partnership or other formal business association or organization of any kind, and the right and obligations of the Parties shall be only those expressly set forth in this Agreement.

3. Parties acknowledge that under this IGA no employee or participant of the Chandler PD PD is to be considered a County employee, and that no rights of County merit, County retirement, or County personnel rules shall accrue to such individual. Chandler PD PD shall have total responsibility for all salaries, wages, bonuses, retirement, withholdings, workman's compensation, occupational disease compensation, unemployment compensation, other employee benefits, and all taxes and premiums appurtenant thereto concerning such individuals and shall save and hold MCSO harmless with respect thereto.

4. Each Party to this Agreement warrants compliance with the Immigration and Nationality Act (INA using E-verify) and all other federal immigration laws and regulations related to the immigration status of its employees and A.R.S. §23-214(A). Each Party shall obtain statements from its subcontractors certifying compliance and shall furnish the statements to the other party upon request. These warranties shall remain in effect through the term of this Agreement. Each party and its subcontractors shall also maintain Employment Eligibility Verification forms (I-9) as required by the Immigration Reform and Control Act of 1986, as amended from time to time, for all employees performing work under this Agreement and verify employee compliance using the E-verify system and shall keep a record of the verification for the duration of the employee's employment or at least three years, whichever is longer. I-9 forms are available for download at USCIS.GOV. Each Party retains the legal right to inspect contractor and subcontractor employee documents performing work under this Agreement to verify compliance with this Agreement. Each Party and its subcontractors shall be given reasonable notice of the other party's intent to inspect and shall make the documents available at the time and date specified. Should either Party find that the other Party or any of its subcontractors are not in compliance; such non-compliance may be considered a material breach of this Agreement and may pursue any and all remedies allowed by law. Nothing set out herein shall make any subcontractor an agent or employee of either Party.

5. Each Party shall comply with all applicable laws, ordinances, executive orders, rules, regulations, standards, and codes of the federal, state, and local government's whether or not specifically referenced herein. The Parties agree that there will be no discrimination as to race, sex, religion, color, age, creed, or national origin in regard to obligations, work, and services performed under the terms of any contract ensuing from this engagement. The Parties will comply with the Executive Order No. 11246, entitled "Equal Employment Opportunity" and as amended by Executive Order No. 11375, as supplemented by the Department of Labor Regulations (41 CFR, Part 60).

6. In accordance with A.R.S. § 35-214, all books, accounts, reports, files, electronic data, and other records relating to this Agreement shall be retained and subject at all reasonable times to inspection and audit by the State of Arizona for six (6) years after completion of this Agreement. Upon request, each Party shall produce original of any and all such records.

7. The laws of the State of Arizona shall govern this IGA. The parties to this Agreement agree to resolve all disputes arising out of or relating to this Agreement through arbitration, after exhausting applicable administrative review, to the extent

required by A.R.S. § 12-1518 except as may be required by other applicable statutes.

a. Any dispute between the parties hereto regarding the interpretation, performance, breach, or enforcement of this Agreement shall be submitted to and resolved by arbitration in accordance with procedures mutually agreed to by the parties hereto or, when the parties cannot agree, in accordance with procedures prescribed by ARS Title 12, Chapter 21 regardless of amount involved. No arbitration award shall include punitive, incidental, or consequential damages.

b. COMMUNITY'S LIMITED WAIVER OF SOVEREIGN IMMUNITY. Notwithstanding any other provision of this Agreement to the contrary, and subject to the limitations set forth in this Paragraph, the Community expressly waives its immunity from suit only as to binding arbitration proceedings as described herein, and to actions to enforce such arbitration decisions brought in a court of competent jurisdiction. This waiver is specifically limited to the following actions and judicial remedies:

   i. Damages: The enforcement of an award of money damages by arbitration; provided the arbitrator(s) and/or the court shall have no authority or jurisdiction to order execution against any assets or revenues of the COMMUNITY except (1) the funds budgeted for this Agreement, and (2) any proceeds of applicable insurance policies. In no instance shall any enforcement of any kind whatsoever be allowed against any assets of the Community other than the limited assets of the Community specified in this Paragraph.

   ii. Action to Compel Arbitration: An action to compel arbitration or enforce arbitration awards or orders pursuant to this Paragraph.

8. This IGA may be amended only by the mutual written consent of authorized representatives for all Parties and require Board and Community approval.

9. This IGA may be terminated at any time by either Party by mailing the other Party written notice of termination by certified mail two (2) months in advance of the requested date of termination. In the event that a Party decides to terminate this IGA, the Parties shall consult prior to the date of termination to ensure termination on the most economical and equitable terms. The Parties agree that any such termination shall not become effective with respect to the current recruits then enrolled in a training rotation until the recruits' training is completed, provided that MCSO continues to have sufficient staffing and other resources to continue the training until that date.

10. Notice is given that pursuant to A.R.S. § 38-511 the Parties may cancel any contract without penalty or further obligation within three years after execution of the contract, if any person significantly involved in initiating, negotiating, securing, drafting or creating the contract on behalf of the Parties is at any time while the contract or any extension of the contract is in effect, an employee or agent of any other party to the contract in any capacity or consultant to any other party of the contract with respect to the subject matter of the contract. Additionally, pursuant to A.R.S § 38-511 the Parties may recoup any fee or commission paid or due to any person significantly involved in initiating, negotiating, securing, drafting or creating the contract on behalf of the Parties from any other Party to the contract arising as the result of the contract.

11. This IGA is effective when signed by the Parties. This Agreement may be executed in two or more counterparts, each of which shall be deemed an original but all of which together shall constitute the same instrument. Faxed, copied, electronic and scanned signatures are acceptable as original signatures.

12. This document is the complete and exclusive statement of understanding between the Parties, and it supersedes all proposals, oral or written, and other documents or communications between the Parties relative to the subject matter herein covered, unless such documents or communications are specifically included by reference.

13. If any term, covenant, condition or provision of this IGA is held by a court of competent jurisdiction to be invalid, void or unenforceable, the remainder of the provisions hereof shall remain in full force and effect and shall in no way be affected, impaired or invalidated.

14. Waiver of any breach of any term, conditions or covenant herein contained shall not be deemed to be a waiver of any subsequent breach of any term, covenant or condition herein.

15. This Agreement will automatically renew for up to two, one-year terms following the Initial Term, unless either Party provides notice to terminate, per Section 9., above.

17. Any notice to be given under this IGA shall be sent to the Parties listed below.

MCSO:

Chief, Administration
Maricopa County Sheriff's Office
550 W Jackson 5th Floor
Phoenix, AZ 850003

Chandler PD

Chief of Police, Bryan Chapman
City of Chandler Police Department
250 E. Chicago Street.
Chandler, AZ 85225

IN WITNESS WHEREOF, the Parties hereto have entered into this IGA as of the date of the last signature set forth below.

CITY OF CHANDLER, an Arizona municipality

_____ _____
Mayor Date

ATTEST:

_____ _____
City Clerk Date

Maricopa County, a political subdivision of the State of Arizona

_____ _____
Thomas Galvin Date
Chairman, Board of Supervisors

ATTEST:

_____ _____
Juanita Garza Date
Clerk of the Board

Chandler PD Police Department

_____ _____
Bryan Chapman Date
Chief of Police

Approved as to form:

_____ _____
Attorney EPW Date

Maricopa County Sheriff's Office

_____ _____
Jerry Sheridan Date
Sheriff

Approved as to form:

_____ _____
Deputy County Attorney Date

City Council Memorandum Police Memo No. CP26-024

Date: September 15, 2025
To: Mayor and Council
Thru: John Pombier, Acting City Manager
Tadd Wille, Assistant City Manager
Bryan Chapman, Chief of Police
Daniel Haskins, Capital Projects Division Manager
From: Ivan Magana, Engineer
Subject: Construction Manager at Risk (CMAR) Pre-Construction Services Agreement No. PD2301.251 with Willmeng Construction, Inc., for the Forensic Services Facility

---

Proposed Motion:

Move City Council award CMAR Pre-Construction Services Agreement No. PD2301.251 to Willmeng Construction, Inc., for the Forensic Services Facility, in an amount not to exceed $430,547.93.

Background/Discussion:

The Forensic Services Section ("the Lab") is currently located within the Downtown Precinct at 250 East Chicago Street. Space limitations have significantly restricted the Lab's capacity to provide forensic analysis, preventing it from meeting the full needs of the Police Department. Since 2005, the Lab has been at capacity, requiring reliance on the Arizona Department of Public Safety (DPS) crime laboratory for certain services. DPS provides additional analysis, including DUI/toxicology and DNA testing, but only under established protocols that limit both the types and quantities of evidence that may be submitted.

The 2014 Chandler Police Department Facilities Master Plan identified the need for a new forensic laboratory. The plan recommended locating the facility on vacant City-owned land adjacent to the Police Property and Evidence Facility at 576 West Pecos Road. This location would improve efficiency in transferring evidence between the Lab and Property and Evidence. Funding for the project was approved by voters as part of the 2021 bond election.

The new one-story Forensic Services Facility is planned at just under 30,000 square feet and will connect directly to the existing Police Property and Evidence Building. The facility will provide specialized laboratory and work areas by discipline, as well as office spaces, a front lobby, conference and multipurpose rooms, a break room, and secure parking.

This Construction Manager at Risk (CMAR) Agreement is for pre-construction services, including cost modeling, value engineering, participation in workshops and meetings, construction schedule development, long-lead analysis, constructability review, utility investigations, cash flow projections, Guaranteed Maximum Price (GMP) preparation (including early GMPs, as applicable), subcontractor selection planning and evaluations, and monthly progress reporting. The Agreement completion time is 600 calendar days from Notice to Proceed.

Evaluation:

The selection process was followed in accordance with city policy and procedure and state law. Staff recommends agreement award to Willmeng Construction, Inc., based on qualifications, relevant firm experience, team experience, project understanding, and project approach.

Fiscal Impact

Account No.	Fund Name	Program Name	Dollar Amount	CIP Funded Y/N
460.2100.6210.0000.6PD652	Public Safety Bonds-Police	Forensic Services Facility	$430,547.93	Y

Attachments

Agreement

Council Map

Docusign Envelope ID: E6C32D3C-1F2C-430A-AE31-0184A77678E5

CITY OF CHANDLER, ARIZONA

FORENSIC SERVICES FACILITY
CITY PROJECT NO. PD2301.251

PRE-CONSTRUCTION SERVICES AGREEMENT

(CONSTRUCTION MANAGER AT RISK)

Daniel Haskins

Daniel Haskins, P.E.
CIP City Engineer

Docusign Envelope ID: E6C32D3C-1F2C-430A-AE31-0184A77678E5

CITY OF CHANDLER, ARIZONA

FORENSIC SERVICES FACILITY
CITY PROJECT NO.: PD2301.251

TABLE OF CONTENTS

ARTICLE 1 - PARTICIPANTS AND PROJECT 1

ARTICLE 2 - AGREEMENT DOCUMENTS 3

ARTICLE 3 - PRE-CONSTRUCTION SERVICES 3

ARTICLE 4 - CONSTRUCTION SERVICES 5

ARTICLE 5 - CITY FURNISHED INFORMATION 5

ARTICLE 6 - AGREEMENT TIME 6

ARTICLE 7 - AGREEMENT PRICE 6

ARTICLE 8 – FORCED LABOR OF ETHNIC UYGHURS PROHIBITED 6

EXHIBIT A – PRE-CONSTRUCTION SCOPE OF WORK AND SCHEDULE A-1
EXHIBIT B – COMPENSATION AND FEE SCHEDULE B-1
EXHIBIT C – INSURANCE REQUIREMENTS C-1
EXHIBIT D – SUBMITTAL REQUIREMENTS FOR GMP/PRICE PROPOSAL D-1
EXHIBIT E – GENERAL CONDITIONS E-1

CONSTRUCTION MANAGER AT RISK
PRE-CONSTRUCTION SERVICES AGREEMENT
PROJECT NO.: PD2301.251

This Agreement (the "AGREEMENT") is made and entered into on the _____ day of _____, 2025, ("Effective Date") by and between City of Chandler, an Arizona municipal corporation, hereinafter called "City" and Willmeng Construction, Inc. the "Construction Manager at Risk" or "CM@Risk" designated below (City and CM@Risk may individually be referred to as "Party" and collectively referred to as "Parties").

City and CM@Risk agree as follows:

ARTICLE 1 - PARTICIPANTS AND PROJECT

CITY: **CIP City Engineer: Daniel Haskins, P.E.**
Public Works & Utilities Department
P.O. Box 4008, Mail Stop 407 Chandler, AZ 85244-4008
Phone: 480-782-3335 Email: Daniel.haskins@chandleraz.gov

CITY: **Construction Project Manager: Raymond Potts**
Public Works & Utilities Department
P.O. Box 4008, Mail Stop 407, Chandler, AZ 85244-4008
Phone: 480-782-3326 Email: Raymond.Potts@chandleraz.gov

CM@RISK:

Legal Company Name:	Willmeng Construction, Inc.
Mailing Address:	1702 East Highland Avenue, Suite 450 Phoenix, AZ 85016
Physical Address:	1702 East Highland Avenue, Suite 450 Phoenix, AZ 85016
Arizona Roc No.:	082904 Class B-1
Federal Tax Id No.:	86-0410806
State Where Organized:	Arizona
Business Organization:	C-Corp
Statutory Agent Name:	Brian Michael Flaherty
Statutory Agent Mailing Address:	1702 East Highland Avenue, Suite 450 Phoenix, AZ 85016
Statutory Agent Physical Address:	1702 East Highland Avenue, Suite 450 Phoenix, AZ 85016

CM@Risk's Authorized Project Representative:

Name:	Cody Phelan
Title:	Chief Operations Officer
Phone:	480-968-4755
Email:	cphelan@willmeng.com

Docusign Envelope ID: E6C32D3C-1F2C-430A-AE31-0184A77678E5

PROJECT DESCRIPTION:

This project entails the construction of a new Forensic Services Facility, situated adjacent to and connected with the existing City of Chandler Property and Evidence Building. The facility will include specialized laboratories for various forensic disciplines, along with office spaces, meeting rooms, a break room, a locker room, and other functional work areas. The scope of work also encompasses site improvements, including landscaping, front parking, and secured parking at the rear of the building.

PROJECT LOCATION:

576 W Pecos Rd # 915, Chandler, AZ 85225

ARTICLE 2 - AGREEMENT DOCUMENTS

2.1 AGREEMENT DOCUMENTS

The Agreement between City and CM@Risk will consist of the following Agreement Documents:

1. This Pre-Construction Services Agreement and all of its Exhibits, incorporated by reference;
2. **Exhibit A** – Pre-Construction Scope of Work and Schedule;
3. **Exhibit B** – Compensation and Fee Schedule;
4. **Exhibit C** – Insurance Requirements;
5. **Exhibit D** – Submittal Requirements for GMP/Price Proposal;
6. **Exhibit E** - General Conditions and General Conditions Appendices.

2.2 DEFINITIONS

The definitions in Sections 2 and 15.1 of the General Conditions apply to all the Agreement Documents, including this Agreement.

ARTICLE 3 - PRE-CONSTRUCTION SERVICES

3.1 SERVICES

CM@Risk must provide all of the services and perform in accordance with Section 17 of the General Conditions. The major components of Pre-Construction Services and the corresponding subsections of Section 17 of the General Conditions are set forth below.

3.2 GENERAL REQUIREMENTS

3.2.1 CM@Risk must perform the services required by, and in accordance with this Agreement and as outlines in the attached **Exhibit A** to the satisfaction of the Project Manager, in full compliance with Section 17.2.1 of the General Conditions.

3.2.2 In performance of the Services under this Agreement, the CM@Risk must fully comply with all applicable Laws, Regulations, or Legal Requirements applicable to City, the Project, and the Agreement.

3.2.3 CM@Risk must perform the Services under this Agreement using only those firms, team members, and individuals designated by CM@Risk consistent with the Statement of Qualifications or as otherwise approved by City in accordance with the General Conditions. No other entities or individuals may be used without the prior written approval of City.

3.2.4 CM@Risk will comply with all terms and conditions of the General Conditions.

3.2.5 In the event of a conflict between this Agreement and the General Conditions or any exhibit hereto or appendix thereto, the terms of this Agreement will control.

3.2.6 **Ownership of Work Product**. Notwithstanding anything to the contrary in this Agreement, all Work Product prepared or otherwise created in connection with the performance of this Agreement, including the Work, are to be and remain the property of City, as set forth in Section 17.2.6 of the General Conditions.

3.3 **DESIGN PROJECT SCHEDULE**

CM@Risk must prepare and present to City a Detailed Project Schedule that is acceptable to the City and in accordance with Section 17.3 of the General Conditions.

3.4 **DESIGN DOCUMENT REVIEW**

CM@Risk must conduct the evaluations, perform the design document reviews, make the recommendations, and provide the other Services referenced in accordance with Section 17.4 of the General Conditions.

3.5 **BASELINE COST MODEL, DETAILED COST ESTIMATES, AND SCHEDULE OF VALUES**

3.5.1 CM@Risk must prepare and submit the Baseline Cost Model, Detailed Cost Estimates, and Schedule of Values in accordance with Section 17.5 of the General Conditions.

3.5.2 The submitted Baseline Cost Model, Detailed Cost Estimates, and Schedule of Values must not exceed the City's Construction Budget, which is **$37,000,000** or a higher amount as revised by the City ("Construction Budget"). If CM@Risk submits a Baseline Cost Model, Detailed Cost Estimates, and Schedule of Values that exceeds the Construction Budget, negotiations could lead to termination or suspension of the Agreement.

3.6 **SUBCONTRACTOR AND MAJOR SUPPLIER SELECTIONS**

CM@Risk must select and obtain approval of Subcontractors and Suppliers in accordance with Section 17.6 of the General Conditions.

3.7 **GUARANTEED MAXIMUM PRICE (GMP) PROPOSAL**

3.7.1 CM@Risk must submit a GMP Proposal for the entire Work, and for each phase (if required) of the Work, at the times set forth in the Pre-Construction Schedule included in attached. The GMP Proposal must be presented in a format acceptable to City based upon the attached **Exhibit D**. City may change the schedule, format, and/or requirements for the GMP Proposal as it deems necessary during Pre-Construction, and may request resubmittal of the GMP Proposal to reflect such changes.

3.7.2 Preparation, submittal, review, and approval (or disapproval, if applicable) of the GMP Proposal will be done in accordance with Section 17.7 of the General Conditions.

3.7.3 For the purposes of the GMP Proposal, the Parties agree that:

a. The CM@Risk Fee will be equal to **8.75%** (percent) of the Cost of Work;

b. General Conditions costs will be a fixed amount or percentage agreed to as part of the Baseline Cost Model.

3.7.4 The GMP Proposal must not exceed the City's Construction Budget.

3.8 **ADDITIONAL PRE-CONSTRUCTION SERVICES**

3.8.1 Additional services which are outside the scope of the services required under the Agreement Documents will not be performed by CM@Risk without prior written authorization from City. Additional services, when authorized by an executed written Change Order under Section 9 of the General Conditions, will be compensated for by a fee mutually agreed upon in such written Change Order between City and CM@Risk.

3.8.2 No claim for additional services, extra work done or materials furnished by CM@Risk will be allowed by City except as provided herein, nor will CM@Risk provide any additional services, do any work, or furnish any materials(s) not covered by this Agreement unless such work or material is first authorized in writing by City. Work or material(s) furnished by CM@Risk without such prior written authorization will be CM@Risk's sole jeopardy, cost, and expense, and CM@Risk hereby agrees that without prior written authorization no claim for compensation for such services, work or materials furnished will be made, and City will not be responsible for such costs.

3.8.3 No Work (as defined by Section 1 of the General Conditions) may be performed under this Pre-Construction Services Agreement, without prior written approval by City. As an example, all procurement of long lead time items that must be procured to support the construction schedule or site investigative Work necessary to complete Pre-Construction Services, if done by the CM@Risk, will be performed only after a GMP Proposal for the Work has been approved and accepted in writing by City and all such Work will be done only under an executed Agreement for Construction Services, or pursuant to a prior written direction from City to engage in such procurement.

ARTICLE 4 - CONSTRUCTION SERVICES

If City accepts CM@Risk's GMP Proposal, CM@Risk and City will enter a Construction Services Agreement for Construction of the Project based upon CM@Risk's Pre-Construction Services performed and GMP Proposal submitted pursuant to this Agreement. The terms of the Construction Services Agreement are being negotiated contemporaneously with this Agreement and CM@Risk agrees to execute the Construction Services Agreement, without further modification, upon acceptance by City of the GMP Proposal. All of CM@Risk's obligations, duties and warranties in relation to Pre-Construction Services and Deliverables (including specifically the GMP Proposal) survive the completion of this Agreement and will be incorporated into the Construction Services Agreement.

ARTICLE 5 - CITY FURNISHED INFORMATION

5.1 City, at no cost to CM@Risk, will furnish the following to CM@Risk:

5.1.1 One copy of data in City's possession or control which City determines in its discretion to be pertinent to the Work. However, CM@Risk will be responsible for searching the records and requesting information it deems reasonably required for the Project.

5.1.2 Electronic copies of programs, reports, drawings, and specifications reasonably required by CM@Risk, to the extent in possession of City.

ARTICLE 6 - AGREEMENT TIME

Agreement Duration is **600** Calendar Days. The Pre-Construction Services described in this Agreement must be performed by CM@Risk in accordance with the Pre-Construction Schedule set forth in attached **Exhibit A**, as updated and expanded in the most current updated/revised and approved Detailed Project Schedule. Failure on the part of CM@Risk to adhere to the Pre-Construction Schedule requirements for activities for which it is responsible and in control will be deemed a material breach and sufficient ground for termination for cause of this Agreement by City.

ARTICLE 7 - AGREEMENT PRICE

7.1 In exchange for CM@Risk's full, timely, and acceptable performance of the Services under this Agreement, and subject to all of the terms of this Agreement, City will pay CM@Risk a fee of **$430,547.93** (the "Agreement Price"). The method of payment for this Agreement is Hourly, Not-to-Exceed. The amount paid will not exceed the Agreement Price for actual costs incurred, based on the negotiated hourly rates and reimbursement schedule as defined in **Exhibit B**, Compensation and Fee Schedule.

7.2 The Agreement Price is all-inclusive, and City will not pay any additional amounts, costs or expense, except for only those specifically designated reimbursable costs, without markup, as set forth in **Exhibit B**.

ARTICLE 8 - FORCED LABOR OF ETHNIC UYGHURS PROHIBITED

8.1 By entering into this Agreement, Contractor certifies and agrees Contractor does not currently use and will not use for the term of this Agreement: (i) the forced labor of ethnic Uyghurs in the People's Republic of China; or (ii) any goods or services produced by the forced labor of ethnic Uyghurs in the People's Republic of China; or (iii) any contractors, subcontractors or suppliers that use the forced labor or any goods or services produced by the forced labor of ethnic Uyghurs in the People's Republic of China.

ARTICLE 9 - BACKGROUND SCREENING/BADGE REQUIREMENTS

9.1 CM@Risk and Subcontractor Worker Background Screening. CM@Risk agrees that all contract workers and subcontractors (collectively "Contract Worker(s)") that CM@Risk furnishes to City under this Agreement will be subject to background and security checks and screening as set forth in this Section (collectively "Background Screening") at CM@Risk's sole cost and expense. As part of the Background Screening, CM@Risk must

provide to a person designated by the City the name(s), address(es), and phone number(s) of all Contract Workers who will provide any services under this Agreement. All Contract Workers must comply with these Background Screening requirements. All Contract Workers must be able to provide proof of the legal right to work in the United States. The Background Screening provided by CM@Risk must comply with all applicable laws, rules, and regulations. CM@Risk further agrees that the Background Screening required in this Section is necessary to preserve and protect public health, safety, and welfare. The Background Screening requirements set forth in this Section are the minimum requirements for this Agreement. City in no way warrants that these minimum requirements are sufficient to protect CM@Risk from any liabilities that may arise out of CM@Risk's services under this Agreement or CM@Risk's failure to comply with this Section. Therefore, in addition to the specific measures set forth below, CM@Risk and its Contract Workers must take such other reasonable, prudent, and necessary measures to further preserve and protect public health, safety, and welfare when providing services under this Agreement.

9.2 Background Screening Requirements and Criteria. Before offering or scheduling any services under this Agreement, CM@Risk agrees that all Contract Workers, including the CM@Risk, if the CM@Risk is an individual or sole proprietorship, must have successfully passed a Background Screening in accordance with this Section. CM@Risk warrants that no person will be permitted to substitute for a Contract Worker who has satisfied the Background Screening requirements until the proposed substitute has also satisfied the Background Screening requirements in this Section. For review and approval, CM@Risk must submit to a person designated by the City proof of a completed Background Screening for each Contract Worker over the age of 18 performing services under this Agreement no fewer than two (2) weeks before the proposed start date of such Contract Worker's services. The Background Screening must have been completed within the 12-month period preceding the Contract Worker's start date under this Agreement and must include the results of a social security (SSN) trace, a national criminal databased check with source verification, and a sex offender database search.

9.3 Additional City Rights Regarding Security Inquiries. In addition to the foregoing, City reserves the rights but not the obligations to: (1) have a Contract Worker be required to provide fingerprints and execute such other documentation as may be necessary to obtain criminal justice information pursuant to A.R.S. § 41-1750(G) (4) or Chandler City Code § 4-22; (2) act on newly acquired information whether or not such information should have been previously discovered; (3) unilaterally change its standards and criteria relative to the acceptability of Contract Workers; and (4) object, at any time and for any reason, to a Contract Worker performing work (including supervision and oversight) under this Agreement.

9.4 CM@Risk Certification. By executing this Agreement, CM@Risk certifies that CM@Risk has read and understands the Background Screening requirements and criteria in this Section and will fully comply with such requirements. CM@Risk further certifies that any Background Screening information to be furnished to City related to CM@Risk or its

Docusign Envelope ID: E6C32D3C-1F2C-430A-AE31-0184A77678E5

Contract Workers will be complete, current, and accurate. A Contract Worker rejected for work under this Agreement will not be proposed to perform work under other City contracts or engagements without City's prior written approval.

9.5 Terms of This Section Applicable to all of CM@Risk's Contracts and Subcontracts. CM@Risk must include the terms of this Section for Contract Worker Background Screening in all contracts and subcontracts for services furnished under this Agreement including, but not limited to, supervision and oversight services.

9.6 Materiality of Background Screening Requirements: Indemnity. The Background Screening requirements of this Section are material to City's entry into this Agreement and any breach of this Section by CM@Risk will be deemed a material breach of this Agreement. In addition to the indemnity provisions set forth in this Agreement, CM@Risk must defend, indemnify, and hold harmless City for any and all Claims arising out of this Background Screening Section including, but not limited to, the disqualification of a Contract Worker by CM@Risk or City for failure to satisfy this Section.

9.7 Continuing Duty, Audit. CM@Risk's obligations and requirements that Contract Workers satisfy this Background Screening Section will continue throughout the entire term of this Agreement. CM@Risk must notify City immediately of any change to a Background Screening of a Contract Worker previously accepted by City. CM@Risk must maintain all records and documents related to all Background Screenings and City reserves the right to audit CM@Risk's compliance with this Section under the terms of this Agreement.

SIGNATURE PAGE TO FOLLOW

Docusign Envelope ID: E6C32D3C-1F2C-430A-AE31-0184A77678E5

IN WITNESS WHEREOF, the parties hereto have executed this Agreement through their duly authorized representatives and bind their respective entitles as of the Effective Date.

"CITY" CITY OF CHANDLER

Mayor

RECOMMENDED BY:

Daniel Haskins August 20, 2025

Daniel Haskins, P.E.
CIP City Engineer

APPROVED AS TO FORM:

City Attorney

ATTEST:

City Clerk Seal

"CM@Risk"
WILLMENG CONSTRUCTION, INC.

Cody Phelan August 20, 2025

Signature Date

Cody Phelan

Print Name

Chief Operations Officer

Title

cphelan@willmeng.com

Signer Email Address

Docusign Envelope ID: E6C32D3C-1F2C-430A-AE31-0184A77678E5

EXHIBIT A

PRE-CONSTRUCTION SERVICES
SCOPE OF WORK AND SCHEDULE

Docusign Envelope ID: E6C32D3C-1F2C-430A-AE31-0184A77678E5

Exhibit A
CM@RISK PRE-CONSTRUCTION SERVICES
SCOPE OF WORK
FORENSIC SERVICES FACILITY
PD2301.251
(Not to Exceed)

Note: The sections below are numbered to correspond with General Conditions, Section 17 – Provisions Applicable Solely to Pre-Construction Services for Construction Manager at Risk.

17.2 – GENERAL

Project Kick-off Meeting

Attend and participate in Project Kick-off meeting. CM@Risk will provide drawings, schedule diagrams, budget charts, and other materials describing the Project, when their use is required for the meeting.

Stakeholders and Public Agencies Meetings

Attend and participate, as may be appropriate, in meetings related to the Project with Stakeholders and Public Agencies.

Partnering Sessions

Attend and participate, as may be appropriate, in Partnering Sessions.

Project/Design Meetings

Participate in bi-weekly or monthly Project/Design meetings.

Project Workshops/Design Workshops

Participate in Project Workshops and Design Workshops and/or other miscellaneous meetings and partnering sessions as required by City. CM@Risk will provide input consistent with sound and generally accepted construction management and contracting practices related to the procurement, cost impact, schedule, quality, and operations/maintenance.

Construction Document Rolling Reviews

Participate in Construction Document Rolling Review meetings. Review of documents as received from Project Designer; feedback consistent with sound and generally accepted construction management and contracting practices related to procurement, cost impact, schedule, quality, and operation/maintenance.

Value Engineering Review Meetings

Participate in Value Engineering Review meetings or Value Engineering workshops. Project Team will routinely assist to identify and evaluate, using engineering principles, any alternate systems, approaches, and design changes that have the potential to reduce Project costs while still delivering a quality and functional product that meets the design intent.

Docusign Envelope ID: E6C32D3C-1F2C-430A-AE31-0184A77678E5

Utility Coordination Meetings

Participate in Utility Coordination meetings. CM@Risk will attend, make presentations, and participate as may be appropriate, in Utility Coordination meetings related to the Project. CM@Risk will provide drawings, schedule diagrams, budget charts, and other materials describing the Project, when their use is required for the meeting.

Comment Resolution Meetings

Participate in meetings with the Consultants and City to review constructability/bid-ability comments after design submission for 30% (SD), 60% (DD), 98% (CD) design and/or 100% (Final CD).

GMP Review/Negotiation Meetings

Participate in meetings with City to review the GMP after submission.

17.3 – DETAILED PROJECT SCHEDULE

Develop Preliminary Construction Schedule & Phasing Plans

Transition design phase schedule to overall project schedule in association with the baseline cost model and proposed phasing plans for early equipment procurement and/or construction activities and the remainder of the construction phase.

Long Lead Analysis and Recommendations

Identify all long lead time materials, fabrications, equipment or other items which may impact the Project Schedule and may require early action on the part of the Project Team including dates required for selecting and procuring such items.

Equipment Plan

Prepare and present to City an Equipment Plan that addresses all rental and owned equipment that is necessary to construct the Project as outlined in General Conditions Section 17.3.6.

17.4 – DESIGN DOCUMENT REVIEWS

Value Analysis/Efficiency Analysis

Evaluate periodically the availability of labor, materials/equipment, cost-sensitive aspects of the design; and other factors that may create an unacceptable variance to the Baseline Cost Model and/or Baseline Project Schedule; use established value analysis principles in recommending cost effective alternatives

Utility Design Review and Comment

Perform reviews and provide written comments on the utility relocation and design submittals and for coordination with the design development for construction of the Project.

Constructability and Bid-ability Reviews

Perform reviews and provide written comments on the project design submittals and

Docusign Envelope ID: E6C32D3C-1F2C-430A-AE31-0184A77678E5

for construction drawings, construction documents, various analyses, and studies and investigations conducted for the design of the Project. Includes, but is not limited to, review and evaluate Design Development documents for clarity, consistency, completeness, and ease of construction in order to achieve the overall objective of the Project. Review prior project as-built plans. Evaluate construction safety issues and proposals of construction safety improvements, as may be applicable. CM@Risk will evaluate whether: (a) the Drawings and Specifications are configured to enable efficient construction; (b) design elements are standardized; (c) construction efficiency is properly considered in the Drawings and Specifications; (d) the design promotes accessibility of personnel, material and equipment, and facilitates construction under adverse weather conditions; (e) sequences of Work required by or inferable from the Drawings and Specifications are practicable; and (f) the design has taken into consideration, efficiency issues concerning access and entrance to the site, lay down and storage of materials, staging of site facilities, construction parking, and other similar pertinent issues. Review comments will be compiled at each of the following design phase milestones: 60% (DD) and 98% (CD).

Document Complementary Review and Cross Checks

Perform reviews and provide written comments regarding the bid-ability of the Project. CM@Risk will check cross-references and complementary Drawings and sections within the Specifications, and in general evaluate whether (a) the Drawings and Specifications are sufficiently clear and detailed to minimize ambiguity and to reduce scope interpretation discrepancies; (b) named materials and equipment are commercially available and are performing well or otherwise in similar installations; (c) Specifications include alternatives in the event a requirement cannot be met in the field; and (d) in its professional opinion, the Project is likely to be subject to differing site conditions. Review comments will be complied at each of the following design phase milestones: 60% (DD) and 98% (CD).

Maintenance of Plant Operations (MOPOs)

Evaluate scope and design for tasks that have the potential to effect plant operations; lead development of planning to minimize or eliminate disruption to Owner's facilities.

Utility/Site Investigations

Participate in site investigation and utility potholing as deemed necessary to pothole, identify, and record existing utilities to avoid conflicts during design planning.

17.5 – BASELINE COSTS MODEL, DETAIL COST ESTIMATE, SCHEDULE OF VALUES

30% Cost Model (Rough Order of Magnitude)

Upon receipt of acceptable 30% drawings, CM@Risk will review all available information regarding design and scope of the Project using the CM@Risk's experience in performing similar work, knowledge of similar projects, and current and projected construction costs and, based upon that review, must develop a Baseline

Docusign Envelope ID: E6C32D3C-1F2C-430A-AE31-0184A77678E5

Cost Model for review by the Project Team and approval by City.

60% Cost Model (Baseline Cost Model)

Upon receipt of acceptable 60% drawings and specifications, CM@Risk will review all available information regarding the design and scope of the Project using CM@Risk's experience in performing similar work, knowledge of similar projects and current and projected construction costs and, based upon that review, must update the Cost Model for review by the Project Team and approval by City.

90% Cost Model (Include between 60% & Continuous)

Upon receipt of acceptable 90% drawings and specifications, CM@Risk will review all available information regarding the design and scope of the Project using CM@Risk's experience in performing similar work, knowledge of similar projects and current and projected construction costs and, based upon that review, must update the Cost Model for review by the Project Team and approval by City.

Continuous Cost Model/Estimate Updates (Design Evolution Log)

Track, estimate/price, and address the Project Team's overall project cost issues that arise outside of the Baseline Cost Model and the latest approved Detailed Cost Estimate such as: City generated changes, Project Team proposed changes, alternate system analysis, constructability items and value engineering analysis.

Schedule of Values

Prepare and submit Schedule of Values for review by the Project Team and approval by City.

Cash Flow Projections

Prepare and submit cash flow projections upon request by City.

17.6 – SUBCONTRACTOR AND MAJOR SUPPLIER SELECTIONS

Procurement Prequalification's & Subcontractor Prequalification

Evaluate potential suppliers and subcontractors with respect to safety, financial capacity, ability to meet/exceed schedule, and quality in order to obtain adequate pool of acceptable bidders.

Subcontractor Selection Plan

Develop and submit written subcontractor selection plan per General Conditions Section 17.6 with justification for any qualifications based selections proposed.

Subcontractor Bid Evaluation/Reports

Prepare and submit detailed list of recommended subcontractors and summary report of the entire selection process.

Pre-bid Conference

Plan, communicate, and conduct pre-bid conferences with prospective major subcontractors and suppliers (e.g., MEP, security/access control, casework, etc.).

Docusign Envelope ID: E6C32D3C-1F2C-430A-AE31-0184A77678E5

17.7 – GMP PROPOSAL

Early Equipment/Early GMP Preparation

Identify long-lead equipment that will greatly improve schedule if procured in an early GMP; work with Owner and Project Designer in developing required Agreement Documents to facilitate this procurement.

GMP Preparation and Submission

Prepare and submit the GMP Proposal in accordance with City's request for GMP Proposal requirements based on the most current completed Drawings and Specifications at that time, which unless otherwise directed by City in writing, will be at 100% Construction Drawings. Preparation and submission of phased GMP Proposals submitted for the Project (such as a separate GMP for long lead equipment or phased construction) are also included in this item.

17.8 – PAYMENT PROCEDURE FOR PRE-CONSTRUCTION SERVICES

Monthly Progress Reports/Request for Payment

Prepare and submit monthly request for payment accompanied by a progress report, detailed invoices and receipts, if applicable.

ALLOWANCE ITEMS

Site Utility Investigations (Potholing) – Allowance

An allowance to supply a potholing subcontractor to continue investigating unknown utilities and locations (if required or not performed by the Project Designer).

Owner's Allowance

An allowance to be used as directed by City.

Exterior Building Envelope Consultant

An allowance to be used to support design review, material compatibility, and moisture and thermal protection strategies. Their input will help ensure long-term durability, energy efficiency, and constructability of the envelope system.

Docusign Envelope ID: E6C32D3C-1F2C-430A-AE31-0184A77678E5

EXHIBIT B

COMPENSATION AND FEE SCHEDULE

Docusign Envelope ID: E6C32D3C-1F2C-430A-AE31-0184A77678E5

EXHIBIT B
CM@RISK PRE-CONSTRUCTION SERVICES
FEE PROPOSAL
FORENSIC SERVICES FACILITY
PD2301.251
8/8/2025
(Not to Exceed)

	Hours	Cost
17.2 - GENERAL		**$86,401.67**
Project Kick-off Meeting	10	$1,559.42
Stakeholders and Public Agencies Meetings	Included	$0.00
Partnering Sessions	Included	$0.00
Project/Design Meetings	192	$28,770.59
Project Workshops/Design Workshops	Included	$0.00
Construction Document Rolling Reviews	144	$21,638.63
Value Engineering Review Meetings	108	$16,110.99
Utility Coordination Meetings	40	$6,008.48
Comment Resolution Meetings	34	$5,078.22
GMP Review/Negotiation Meetings	46	$7,235.34
17.3 - DETAILED PROJECT SCHEDULE		**$21,762.20**
Develop Preliminary Construction Schedule & Phasing Plans	92	$14,099.93
Long Lead Analysis and Recommendations	50	$7,662.27
Equipment Plan	Included	$0.00
17.4 - DESIGN DOCUMENT REVIEWS		**$74,369.03**
Value Analysis/Efficiency Analysis	176	$26,442.70
Utility Design Review and Comment	76	$11,610.25
Constructability and Bid-ability Reviews	228	$33,947.75
Document Complementary Review and Cross Checks	Included	$0.00
Maintenance of Plant Operations (MOPOs)	Included	$0.00
Utility/Site Investigations	16	$2,368.34
17.5 - BASELINE COSTS MODEL, DETAIL COST EST, SCHEDULE OF VALUES		**$148,275.04**
30% Cost Model (Rough Order of Magnitude)	184	$26,721.32
60% Cost Model (Baseline Cost Model)	284	$40,517.90
90% Cost Estimate	284	$40,517.90
100% Cost Estimate	284	$40,517.90
Schedule of Values	Included	$0.00
Cash Flow Projections	Included	$0.00
17.6 - SUBCONTRACTOR AND MAJOR SUPPLIER SELECTIONS		**$13,464.02**
Procurement Prequalifications & Subcontractor Prequalification	48	$6,732.01
Subcontractor Selection Plan	48	$6,732.01
Subcontractor Bid Evaluation/Reports	Included	$0.00
Pre-bid Conference	Included	$0.00
17.7 - GMP PROPOSALS		**$25,921.39**
Early Equipment/Early GMP Preparation	68	$9,113.83
GMP Preparation and Submission	120	$16,807.56
17.8 - PAYMENT PROCEDURE FOR PRE-CONSTRUCTION SERVICES		**$5,554.58**
Monthly Progress Reports/Request for Payment	40	$5,554.58
SUBTOTAL:		**$375,747.93**

	Hours	Cost
REIMBURSABLES & ALLOWANCES		**$54,800.00**
Site Utility Investigations (Potholing)	1	$10,000.00
Owner's Allowance	1	$40,000.00
Exterior Building Envelope Consultant	24	$4,800.00
TOTAL:		**$430,547.93**

Docusign Envelope ID: E6C32D3C-1F2C-430A-AE31-0184A77678E5

FORENSIC SERVICES FACILITY

Supporting Cost Sheet to Exhibit B .1

		Hours (by Design Stage)				Cost (by Design Stage)				Total Cost
17.2 - GENERAL	**Rate**	**30%**	**60%**	**90%**	**100%**	**30%**	**60%**	**90%**	**100%**	**$86,401.67**
Project Kick-off Meeting										**$1,559.42**
Market Leader / Team Principal	$ 174.14	2				$ 348.29	$ -	$ -	$ -	$348.29
Project Executive	$ 164.03	2				$ 328.06	$ -	$ -	$ -	$328.06
Project Manager	$ 150.55	2				$ 301.10	$ -	$ -	$ -	$301.10
Pre-Con Director	$ 150.55	2				$ 301.10	$ -	$ -	$ -	$301.10
Estimator 1	$ 140.44	2				$ 280.88	$ -	$ -	$ -	$280.88
Estimator 2	$ 140.44					$ -	$ -	$ -	$ -	$0.00
Superintendent	$ 140.44					$ -	$ -	$ -	$ -	$0.00
Contract Admin	$ 78.65					$ -	$ -	$ -	$ -	$0.00
Stakeholders and Public Agencies Meetings - Cost are Included										**$0.00**
Market Leader / Team Principal	$ 174.14					$ -	$ -	$ -	$ -	$0.00
Project Executive	$ 164.03					$ -	$ -	$ -	$ -	$0.00
Project Manager	$ 150.55					$ -	$ -	$ -	$ -	$0.00
Pre-Con Director	$ 150.55					$ -	$ -	$ -	$ -	$0.00
Estimator 1	$ 140.44					$ -	$ -	$ -	$ -	$0.00
Estimator 2	$ 140.44					$ -	$ -	$ -	$ -	$0.00
Superintendent	$ 140.44					$ -	$ -	$ -	$ -	$0.00
Contract Admin	$ 78.65					$ -	$ -	$ -	$ -	$0.00
Partnering Sessions - Cost are Included										**$0.00**
Market Leader / Team Principal	$ 174.14					$ -	$ -	$ -	$ -	$0.00
Project Executive	$ 164.03					$ -	$ -	$ -	$ -	$0.00
Project Manager	$ 150.55					$ -	$ -	$ -	$ -	$0.00
Pre-Con Director	$ 150.55					$ -	$ -	$ -	$ -	$0.00
Estimator 1	$ 140.44					$ -	$ -	$ -	$ -	$0.00
Estimator 2	$ 140.44					$ -	$ -	$ -	$ -	$0.00
Superintendent	$ 140.44					$ -	$ -	$ -	$ -	$0.00
Contract Admin	$ 78.65					$ -	$ -	$ -	$ -	$0.00
Project/Design Meetings										**$28,770.59**
Market Leader / Team Principal	$ 174.14	4	4	4	4	$ 696.57	$ 696.57	$ 696.57	$ 696.57	$2,786.28
Project Executive	$ 164.03	4	4	4	4	$ 656.12	$ 656.12	$ 656.12	$ 656.12	$2,624.50
Project Manager	$ 150.55	12	12	12	8	$ 1,806.59	$ 1,806.59	$ 1,806.59	$ 1,204.39	$6,624.16
Pre-Con Director	$ 150.55	12	12	12	8	$ 1,806.59	$ 1,806.59	$ 1,806.59	$ 1,204.39	$6,624.16
Estimator 1	$ 140.44	12	12	12	8	$ 1,685.25	$ 1,685.25	$ 1,685.25	$ 1,123.50	$6,179.25
Estimator 2	$ 140.44	4	4	4	4	$ 561.75	$ 561.75	$ 561.75	$ 561.75	$2,247.00
Superintendent	$ 140.44	0	4	4	4	$ -	$ 561.75	$ 561.75	$ 561.75	$1,685.25
Contract Admin	$ 78.65					$ -	$ -	$ -	$ -	$0.00
Project Workshops/Design Workshops - Cost are Included										**$0.00**
Market Leader / Team Principal	$ 174.14					$ -	$ -	$ -	$ -	$0.00
Project Executive	$ 164.03					$ -	$ -	$ -	$ -	$0.00
Project Manager	$ 150.55					$ -	$ -	$ -	$ -	$0.00
Pre-Con Director	$ 150.55					$ -	$ -	$ -	$ -	$0.00
Estimator 1	$ 140.44					$ -	$ -	$ -	$ -	$0.00
Estimator 2	$ 140.44					$ -	$ -	$ -	$ -	$0.00
Superintendent	$ 140.44					$ -	$ -	$ -	$ -	$0.00
Contract Admin	$ 78.65					$ -	$ -	$ -	$ -	$0.00
Construction Document Rolling Reviews										**$21,638.63**
Market Leader / Team Principal	$ 174.14	2	4	4	2	$ 348.29	$ 696.57	$ 696.57	$ 348.29	$2,089.71
Project Executive	$ 164.03	2	4	4	2	$ 328.06	$ 656.12	$ 656.12	$ 328.06	$1,968.37
Project Manager	$ 150.55	4	8	8	4	$ 602.20	$ 1,204.39	$ 1,204.39	$ 602.20	$3,613.18
Pre-Con Director	$ 150.55	4	8	8	4	$ 602.20	$ 1,204.39	$ 1,204.39	$ 602.20	$3,613.18
Estimator 1	$ 140.44	4	8	8	4	$ 561.75	$ 1,123.50	$ 1,123.50	$ 561.75	$3,370.50
Estimator 2	$ 140.44	2	4	4	2	$ 280.88	$ 561.75	$ 561.75	$ 280.88	$1,685.25
Superintendent	$ 140.44	0	4	4	4	$ -	$ 561.75	$ 561.75	$ 561.75	$1,685.25
Contract Admin	$ 78.65					$ -	$ -	$ -	$ -	$0.00
MEP Specialist	$ 150.55		8	8	8	$ -	$ 1,204.40	$ 1,204.40	$ 1,204.40	$3,613.20
Value Engineering Review Meetings										**$16,110.99**
Market Leader / Team Principal	$ 174.14		4	4		$ -	$ 696.57	$ 696.57	$ -	$1,393.14
Project Executive	$ 164.03		4	4		$ -	$ 656.12	$ 656.12	$ -	$1,312.25
Project Manager	$ 150.55		16	8		$ -	$ 2,408.78	$ 1,204.39	$ -	$3,613.18
Pre-Con Director	$ 150.55		16	8		$ -	$ 2,408.78	$ 1,204.39	$ -	$3,613.18
Estimator 1	$ 140.44		16	8		$ -	$ 2,247.00	$ 1,123.50	$ -	$3,370.50
Estimator 2	$ 140.44		8	4		$ -	$ 1,123.50	$ 561.75	$ -	$1,685.25
Superintendent	$ 140.44		4	4		$ -	$ 561.75	$ 561.75	$ -	$1,123.50
Contract Admin	$ 78.65					$ -	$ -	$ -	$ -	$0.00
Utility Coordination Meetings										**$6,008.48**
Market Leader	$ 174.14		2	2		$ -	$ 348.29	$ 348.29	$ -	$696.57
Project Executive	$ 164.03		2	2		$ -	$ 328.06	$ 328.06	$ -	$656.12
Project Manager	$ 150.55		4	4		$ -	$ 602.20	$ 602.20	$ -	$1,204.39
Pre-Con Director	$ 150.55		4	4		$ -	$ 602.20	$ 602.20	$ -	$1,204.39
Estimator 1	$ 140.44		4	4		$ -	$ 561.75	$ 561.75	$ -	$1,123.50
Estimator 2	$ 140.44		2	2		$ -	$ 280.88	$ 280.88	$ -	$561.75
Superintendent	$ 140.44		2	2		$ -	$ 280.88	$ 280.88	$ -	$561.75
Contract Admin	$ 78.65					$ -	$ -	$ -	$ -	$0.00
Comment Resolution Meetings										**$5,078.22**
Market Leader / Team Principal	$ 174.14					$ -	$ -	$ -	$ -	$0.00
Project Executive	$ 164.03	2	2	2		$ 328.06	$ 328.06	$ 328.06	$ -	$984.19
Project Manager	$ 150.55	2	4	2		$ 301.10	$ 602.20	$ 301.10	$ -	$1,204.39
Pre-Con Director	$ 150.55	2	4	2		$ 301.10	$ 602.20	$ 301.10	$ -	$1,204.39

Estimator 1	$ 140.44	2	2	2		$ 280.88	$ 280.88	$ 280.88	$ -	$842.63
Estimator 2	$ 140.44	2	2	2		$ 280.88	$ 280.88	$ 280.88	$ -	$842.63
Superintendent	$ 140.44					$ -	$ -	$ -	$ -	$0.00
Contract Admin	$ 78.65					$ -	$ -	$ -	$ -	$0.00
GMP Review/Negotiation Meetings										**$7,235.34**
Market Leader / Team Principal	$ 174.14	2	4	4		$ 348.29	$ 696.57	$ 696.57	$ -	$1,741.43
Project Executive	$ 164.03	2	4	4		$ 328.06	$ 656.12	$ 656.12	$ -	$1,640.31
Project Manager	$ 150.55	2	4	4		$ 301.10	$ 602.20	$ 602.20	$ -	$1,505.49
Pre-Con Director	$ 150.55	2	4	4		$ 301.10	$ 602.20	$ 602.20	$ -	$1,505.49
Estimator 1	$ 140.44	2	2	2		$ 280.88	$ 280.88	$ 280.88	$ -	$842.63
Estimator 2	$ 140.44					$ -	$ -	$ -	$ -	$0.00
Superintendent	$ 140.44					$ -	$ -	$ -	$ -	$0.00
Contract Admin	$ 78.65					$ -	$ -	$ -	$ -	$0.00
17.3 - DETAILED PROJECT SCHEDULE										**$21,762.20**
Develop Design Phase Schedule										**$0.00**
Market Leader / Team Principal	$ 174.14					$ -	$ -	$ -	$ -	$0.00
Project Executive	$ 164.03					$ -	$ -	$ -	$ -	$0.00
Project Manager	$ 150.55					$ -	$ -	$ -	$ -	$0.00
Pre-Con Director	$ 150.55					$ -	$ -	$ -	$ -	$0.00
Estimator 1	$ 140.44					$ -	$ -	$ -	$ -	$0.00
Estimator 2	$ 140.44					$ -	$ -	$ -	$ -	$0.00
Superintendent	$ 140.44					$ -	$ -	$ -	$ -	$0.00
Contract Admin	$ 78.65					$ -	$ -	$ -	$ -	$0.00
Design Phase Schedule - Monthly Updates										**$0.00**
Market Leader / Team Principal	$ 174.14					$ -	$ -	$ -	$ -	$0.00
Project Executive	$ 164.03					$ -	$ -	$ -	$ -	$0.00
Project Manager	$ 150.55					$ -	$ -	$ -	$ -	$0.00
Pre-Con Director	$ 150.55					$ -	$ -	$ -	$ -	$0.00
Estimator 1	$ 140.44					$ -	$ -	$ -	$ -	$0.00
Estimator 2	$ 140.44					$ -	$ -	$ -	$ -	$0.00
Superintendent	$ 140.44					$ -	$ -	$ -	$ -	$0.00
Contract Admin	$ 78.65					$ -	$ -	$ -	$ -	$0.00
Develop Preliminary Construction Schedule & Phasing Plans										**$14,099.93**
Market Leader / Team Principal	$ 174.14	2	4	4		$ 348.29	$ 696.57	$ 696.57	$ -	$1,741.43
Project Executive	$ 164.03	2	4	4		$ 328.06	$ 656.12	$ 656.12	$ -	$1,640.31
Project Manager	$ 150.55	8	16	16		$ 1,204.39	$ 2,408.78	$ 2,408.78	$ -	$6,021.96
Pre-Con Director	$ 150.55	4	8	8		$ 602.20	$ 1,204.39	$ 1,204.39	$ -	$3,010.98
Estimator 1	$ 140.44					$ -	$ -	$ -	$ -	$0.00
Estimator 2	$ 140.44					$ -	$ -	$ -	$ -	$0.00
Superintendent	$ 140.44		4	8		$ -	$ 561.75	$ 1,123.50	$ -	$1,685.25
Contract Admin	$ 78.65					$ -	$ -	$ -	$ -	$0.00
Long Lead Analysis and Recommendations										**$7,662.27**
Market Leader / Team Principal	$ 174.14	2	2	2		$ 348.29	$ 348.29	$ 348.29	$ -	$1,044.86
Project Executive	$ 164.03	2	4	4		$ 328.06	$ 656.12	$ 656.12	$ -	$1,640.31
Project Manager	$ 150.55	2	4	4		$ 301.10	$ 602.20	$ 602.20	$ -	$1,505.49
Pre-Con Director	$ 150.55	2	4	4		$ 301.10	$ 602.20	$ 602.20	$ -	$1,505.49
Estimator 1	$ 140.44	2	4	4		$ 280.88	$ 561.75	$ 561.75	$ -	$1,404.38
Estimator 2	$ 140.44					$ -	$ -	$ -	$ -	$0.00
Superintendent	$ 140.44		2	2		$ -	$ 280.88	$ 280.88	$ -	$561.75
Contract Admin	$ 78.65					$ -	$ -	$ -	$ -	$0.00
Equipment Plan - Cost are Included										**$0.00**
Market Leader / Team Principal	$ 174.14					$ -	$ -	$ -	$ -	$0.00
Project Executive	$ 164.03					$ -	$ -	$ -	$ -	$0.00
Project Manager	$ 150.55					$ -	$ -	$ -	$ -	$0.00
Pre-Con Director	$ 150.55					$ -	$ -	$ -	$ -	$0.00
Estimator 1	$ 140.44					$ -	$ -	$ -	$ -	$0.00
Estimator 2	$ 140.44					$ -	$ -	$ -	$ -	$0.00
Superintendent	$ 140.44					$ -	$ -	$ -	$ -	$0.00
Contract Admin	$ 78.65					$ -	$ -	$ -	$ -	$0.00
17.4 - DESIGN DOCUMENT REVIEWS										**$74,369.03**
Value Analysis/Efficiency Analysis										**$26,442.70**
Market Leader / Team Principal	$ 174.14		8	8		$ -	$ 1,393.14	$ 1,393.14	$ -	$2,786.28
Project Executive	$ 164.03		8	8		$ -	$ 1,312.25	$ 1,312.25	$ -	$2,624.50
Project Manager	$ 150.55		24	16		$ -	$ 3,613.18	$ 2,408.78	$ -	$6,021.96
Pre-Con Director	$ 150.55		24	16		$ -	$ 3,613.18	$ 2,408.78	$ -	$6,021.96
Estimator 1	$ 140.44		24	16		$ -	$ 3,370.50	$ 2,247.00	$ -	$5,617.50
Estimator 2	$ 140.44		8	8		$ -	$ 1,123.50	$ 1,123.50	$ -	$2,247.00
Superintendent	$ 140.44		4	4		$ -	$ 561.75	$ 561.75	$ -	$1,123.50
Contract Admin	$ 78.65					$ -	$ -	$ -	$ -	$0.00
Utility Design Review and Comment										**$11,610.25**
Market Leader / Team Principal	$ 174.14	2	4	4		$ 348.29	$ 696.57	$ 696.57	$ -	$1,741.43
Project Executive	$ 164.03	2	4	4		$ 328.06	$ 656.12	$ 656.12	$ -	$1,640.31
Project Manager	$ 150.55	2	8	8		$ 301.10	$ 1,204.39	$ 1,204.39	$ -	$2,709.88
Pre-Con Director	$ 150.55	2	8	8		$ 301.10	$ 1,204.39	$ 1,204.39	$ -	$2,709.88
Estimator 1	$ 140.44	2	4	4		$ 280.88	$ 561.75	$ 561.75	$ -	$1,404.38
Estimator 2	$ 140.44					$ -	$ -	$ -	$ -	$0.00
Superintendent	$ 140.44	2	4	4		$ 280.88	$ 561.75	$ 561.75	$ -	$1,404.38
Contract Admin	$ 78.65					$ -	$ -	$ -	$ -	$0.00
Constructability and Bid-ability Reviews										**$33,947.75**
Market Leader / Team Principal	$ 174.14		2	2		$ -	$ 348.29	$ 348.29	$ -	$696.57
Project Executive	$ 164.03		2	2		$ -	$ 328.06	$ 328.06	$ -	$656.12
Project Manager	$ 150.55		24	24		$ -	$ 3,613.18	$ 3,613.18	$ -	$7,226.35
Pre-Con Director	$ 150.55		24	24		$ -	$ 3,613.18	$ 3,613.18	$ -	$7,226.35
Estimator 1	$ 140.44		16	8		$ -	$ 2,247.00	$ 1,123.50	$ -	$3,370.50
Estimator 2	$ 140.44		4	4		$ -	$ 561.75	$ 561.75	$ -	$1,123.50

Docusign Envelope ID: E6C32D3C-1F2C-430A-AE31-0184A77678E5

Superintendent	$ 140.44		16	4		$ -	$ 2,247.00	$ 561.75	$ -	$2,808.75
Contract Admin	$ 78.65					$ -	$ -	$ -	$ -	$0.00
MEP Specialist	$ 150.55		24	24	24	$ -	$ 3,613.20	$ 3,613.20	$ 3,613.20	$10,839.60
Document Complementary Review and Cross Checks - Cost are Included										**$0.00**
Market Leader / Team Principal	$ 174.14					$ -	$ -	$ -	$ -	$0.00
Project Executive	$ 164.03					$ -	$ -	$ -	$ -	$0.00
Project Manager	$ 150.55					$ -	$ -	$ -	$ -	$0.00
Pre-Con Director	$ 150.55					$ -	$ -	$ -	$ -	$0.00
Estimator 1	$ 140.44					$ -	$ -	$ -	$ -	$0.00
Estimator 2	$ 140.44					$ -	$ -	$ -	$ -	$0.00
Superintendent	$ 140.44					$ -	$ -	$ -	$ -	$0.00
Contract Admin	$ 78.65					$ -	$ -	$ -	$ -	$0.00
Maintenance of Plant Operations (MOPOs) - Cost are Included										**$0.00**
Market Leader / Team Principal	$ 174.14					$ -	$ -	$ -	$ -	$0.00
Project Executive	$ 164.03					$ -	$ -	$ -	$ -	$0.00
Project Manager	$ 150.55					$ -	$ -	$ -	$ -	$0.00
Pre-Con Director	$ 150.55					$ -	$ -	$ -	$ -	$0.00
Estimator 1	$ 140.44					$ -	$ -	$ -	$ -	$0.00
Estimator 2	$ 140.44					$ -	$ -	$ -	$ -	$0.00
Superintendent	$ 140.44					$ -	$ -	$ -	$ -	$0.00
Contract Admin	$ 78.65					$ -	$ -	$ -	$ -	$0.00
Utility/Site Investigations										**$2,368.34**
Market Leader / Team Principal	$ 174.14					$ -	$ -	$ -	$ -	$0.00
Project Executive	$ 164.03					$ -	$ -	$ -	$ -	$0.00
Project Manager	$ 150.55		8			$ -	$ 1,204.39	$ -	$ -	$1,204.39
Pre-Con Director	$ 150.55		4			$ -	$ 602.20	$ -	$ -	$602.20
Estimator 1	$ 140.44					$ -	$ -	$ -	$ -	$0.00
Estimator 2	$ 140.44					$ -	$ -	$ -	$ -	$0.00
Superintendent	$ 140.44		4			$ -	$ 561.75	$ -	$ -	$561.75
Contract Admin	$ 78.65					$ -	$ -	$ -	$ -	$0.00
17.5 - BASELINE COSTS MODEL, DETAIL COST EST, SCHEDULE OF VALUES										**$148,275.04**
30% Cost Model (Rough Order of Magnitude)										**$26,721.32**
Market Leader / Team Principal	$ 174.14	8				$ 1,393.14	$ -	$ -	$ -	$1,393.14
Project Executive	$ 164.03	16				$ 2,624.50	$ -	$ -	$ -	$2,624.50
Project Manager	$ 150.55	24				$ 3,613.18	$ -	$ -	$ -	$3,613.18
Pre-Con Director	$ 150.55	48				$ 7,226.35	$ -	$ -	$ -	$7,226.35
Estimator 1	$ 140.44	40				$ 5,617.50	$ -	$ -	$ -	$5,617.50
Estimator 2	$ 140.44	40				$ 5,617.50	$ -	$ -	$ -	$5,617.50
Superintendent	$ 140.44					$ -	$ -	$ -	$ -	$0.00
Contract Admin	$ 78.65	8				$ 629.16	$ -	$ -	$ -	$629.16
60% Cost Model (Baseline Cost Model)										**$40,517.90**
Market Leader / Team Principal	$ 174.14		16			$ -	$ 2,786.28	$ -	$ -	$2,786.28
Project Executive	$ 164.03		24			$ -	$ 3,936.74	$ -	$ -	$3,936.74
Project Manager	$ 150.55		40			$ -	$ 6,021.96	$ -	$ -	$6,021.96
Pre-Con Director	$ 150.55		60			$ -	$ 9,032.94	$ -	$ -	$9,032.94
Estimator 1	$ 140.44		60			$ -	$ 8,426.25	$ -	$ -	$8,426.25
Estimator 2	$ 140.44		60			$ -	$ 8,426.25	$ -	$ -	$8,426.25
Superintendent	$ 140.44					$ -	$ -	$ -	$ -	$0.00
Contract Admin	$ 78.65		24			$ -	$ 1,887.48	$ -	$ -	$1,887.48
90% Cost Estimate										**$40,517.90**
Market Leader / Team Principal	$ 174.14			16		$ -	$ -	$ 2,786.28	$ -	$2,786.28
Project Executive	$ 164.03			24		$ -	$ -	$ 3,936.74	$ -	$3,936.74
Project Manager	$ 150.55			40		$ -	$ -	$ 6,021.96	$ -	$6,021.96
Pre-Con Director	$ 150.55			60		$ -	$ -	$ 9,032.94	$ -	$9,032.94
Estimator 1	$ 140.44			60		$ -	$ -	$ 8,426.25	$ -	$8,426.25
Estimator 2	$ 140.44			60		$ -	$ -	$ 8,426.25	$ -	$8,426.25
Superintendent	$ 140.44					$ -	$ -	$ -	$ -	$0.00
Contract Admin	$ 78.65			24		$ -	$ -	$ 1,887.48	$ -	$1,887.48
100% Cost Estimate										**$40,517.90**
Market Leader / Team Principal	$ 174.14				16	$ -	$ -	$ -	$ 2,786.28	$2,786.28
Project Executive	$ 164.03				24	$ -	$ -	$ -	$ 3,936.74	$3,936.74
Project Manager	$ 150.55				40	$ -	$ -	$ -	$ 6,021.96	$6,021.96
Pre-Con Director	$ 150.55				60	$ -	$ -	$ -	$ 9,032.94	$9,032.94
Estimator 1	$ 140.44				60	$ -	$ -	$ -	$ 8,426.25	$8,426.25
Estimator 2	$ 140.44				60	$ -	$ -	$ -	$ 8,426.25	$8,426.25
Superintendent	$ 140.44					$ -	$ -	$ -	$ -	$0.00
Contract Admin	$ 78.65				24	$ -	$ -	$ -	$ 1,887.48	$1,887.48
Schedule of Values - Cost are Included										**$0.00**
Market Leader / Team Principal	$ 174.14					$ -	$ -	$ -	$ -	$0.00
Project Executive	$ 164.03					$ -	$ -	$ -	$ -	$0.00
Project Manager	$ 150.55					$ -	$ -	$ -	$ -	$0.00
Pre-Con Director	$ 150.55					$ -	$ -	$ -	$ -	$0.00
Estimator 1	$ 140.44					$ -	$ -	$ -	$ -	$0.00
Estimator 2	$ 140.44					$ -	$ -	$ -	$ -	$0.00
Superintendent	$ 140.44					$ -	$ -	$ -	$ -	$0.00
Contract Admin	$ 78.65					$ -	$ -	$ -	$ -	$0.00
Cash Flow Projections - Cost are Included										**$0.00**
Market Leader / Team Principal	$ 174.14					$ -	$ -	$ -	$ -	$0.00
Project Executive	$ 164.03					$ -	$ -	$ -	$ -	$0.00
Project Manager	$ 150.55					$ -	$ -	$ -	$ -	$0.00
Pre-Con Director	$ 150.55					$ -	$ -	$ -	$ -	$0.00
Estimator 1	$ 140.44					$ -	$ -	$ -	$ -	$0.00
Estimator 2	$ 140.44					$ -	$ -	$ -	$ -	$0.00
Superintendent	$ 140.44					$ -	$ -	$ -	$ -	$0.00
Contract Admin	$ 78.65					$ -	$ -	$ -	$ -	$0.00

17.6 - SUBCONTRACTOR AND MAJOR SUPPLIER SELECTIONS											**$13,464.02**
Procurement Prequalifications & Subcontractor Prequalification											**$6,732.01**
Market Leader / Team Principal	$	174.14		2	2		$ -	$ 348.29	$ 348.29	$ -	$696.57
Project Executive	$	164.03		4	4		$ -	$ 656.12	$ 656.12	$ -	$1,312.25
Project Manager	$	150.55		4	4		$ -	$ 602.20	$ 602.20	$ -	$1,204.39
Pre-Con Director	$	150.55		4	4		$ -	$ 602.20	$ 602.20	$ -	$1,204.39
Estimator 1	$	140.44		4	4		$ -	$ 561.75	$ 561.75	$ -	$1,123.50
Estimator 2	$	140.44		2	2		$ -	$ 280.88	$ 280.88	$ -	$561.75
Superintendent	$	140.44					$ -	$ -	$ -	$ -	$0.00
Contract Admin	$	78.65		4	4		$ -	$ 314.58	$ 314.58	$ -	$629.16
Subcontractor Selection Plan											**$6,732.01**
Market Leader / Team Principal	$	174.14			2	2	$ -	$ -	$ 348.29	$ 348.29	$696.57
Project Executive	$	164.03			4	4	$ -	$ -	$ 656.12	$ 656.12	$1,312.25
Project Manager	$	150.55			4	4	$ -	$ -	$ 602.20	$ 602.20	$1,204.39
Pre-Con Director	$	150.55			4	4	$ -	$ -	$ 602.20	$ 602.20	$1,204.39
Estimator 1	$	140.44			4	4	$ -	$ -	$ 561.75	$ 561.75	$1,123.50
Estimator 2	$	140.44			2	2	$ -	$ -	$ 280.88	$ 280.88	$561.75
Superintendent	$	140.44					$ -	$ -	$ -	$ -	$0.00
Contract Admin	$	78.65			4	4	$ -	$ -	$ 314.58	$ 314.58	$629.16
Subcontractor Bid Evaluation/Reports - Cost are Included											**$0.00**
Market Leader / Team Principal	$	174.14					$ -	$ -	$ -	$ -	$0.00
Project Executive	$	164.03					$ -	$ -	$ -	$ -	$0.00
Project Manager	$	150.55					$ -	$ -	$ -	$ -	$0.00
Pre-Con Director	$	150.55					$ -	$ -	$ -	$ -	$0.00
Estimator 1	$	140.44					$ -	$ -	$ -	$ -	$0.00
Estimator 2	$	140.44					$ -	$ -	$ -	$ -	$0.00
Superintendent	$	140.44					$ -	$ -	$ -	$ -	$0.00
Contract Admin	$	78.65					$ -	$ -	$ -	$ -	$0.00
Pre-bid Conference - Cost are Included											**$0.00**
Market Leader / Team Principal	$	174.14					$ -	$ -	$ -	$ -	$0.00
Project Executive	$	164.03					$ -	$ -	$ -	$ -	$0.00
Project Manager	$	150.55					$ -	$ -	$ -	$ -	$0.00
Pre-Con Director	$	150.55					$ -	$ -	$ -	$ -	$0.00
Estimator 1	$	140.44					$ -	$ -	$ -	$ -	$0.00
Estimator 2	$	140.44					$ -	$ -	$ -	$ -	$0.00
Superintendent	$	140.44					$ -	$ -	$ -	$ -	$0.00
Contract Admin	$	78.65					$ -	$ -	$ -	$ -	$0.00
17.7 - GMP PROPOSALS											**$25,921.39**
Early Equipment/Early GMP Preparation											**$9,113.83**
Market Leader / Team Principal	$	174.14		4			$ -	$ 696.57	$ -	$ -	$696.57
Project Executive	$	164.03		4			$ -	$ 656.12	$ -	$ -	$656.12
Project Manager	$	150.55		16			$ -	$ 2,408.78	$ -	$ -	$2,408.78
Pre-Con Director	$	150.55		16			$ -	$ 2,408.78	$ -	$ -	$2,408.78
Estimator 1	$	140.44		8			$ -	$ 1,123.50	$ -	$ -	$1,123.50
Estimator 2	$	140.44		4			$ -	$ 561.75	$ -	$ -	$561.75
Superintendent	$	140.44					$ -	$ -	$ -	$ -	$0.00
Contract Admin	$	78.65		16			$ -	$ 1,258.32	$ -	$ -	$1,258.32
GMP Preparation and Submission											**$16,807.56**
Market Leader / Team Principal	$	174.14			8		$ -	$ -	$ 1,393.14	$ -	$1,393.14
Project Executive	$	164.03			8		$ -	$ -	$ 1,312.25	$ -	$1,312.25
Project Manager	$	150.55			24		$ -	$ -	$ 3,613.18	$ -	$3,613.18
Pre-Con Director	$	150.55			24		$ -	$ -	$ 3,613.18	$ -	$3,613.18
Estimator 1	$	140.44			24		$ -	$ -	$ 3,370.50	$ -	$3,370.50
Estimator 2	$	140.44			16		$ -	$ -	$ 2,247.00	$ -	$2,247.00
Superintendent	$	140.44					$ -	$ -	$ -	$ -	$0.00
Contract Admin	$	78.65			16		$ -	$ -	$ 1,258.32	$ -	$1,258.32
17.8 - PAYMENT PROCEDURE FOR PRE-CONSTRUCTION SERVICES											**$5,554.58**
Monthly Progress Reports/Request for Payment											**$5,554.58**
Market Leader / Team Principal	$	174.14					$ -	$ -	$ -	$ -	$0.00
Project Executive	$	164.03	2	2	2	2	$ 328.06	$ 328.06	$ 328.06	$ 328.06	$1,312.25
Project Manager	$	150.55	4	4	4	4	$ 602.20	$ 602.20	$ 602.20	$ 602.20	$2,408.78
Pre-Con Director	$	150.55	2	2	2	2	$ 301.10	$ 301.10	$ 301.10	$ 301.10	$1,204.39
Estimator 1	$	140.44					$ -	$ -	$ -	$ -	$0.00
Estimator 2	$	140.44					$ -	$ -	$ -	$ -	$0.00
Superintendent	$	140.44					$ -	$ -	$ -	$ -	$0.00
Contract Admin	$	78.65	2	2	2	2	$ 157.29	$ 157.29	$ 157.29	$ 157.29	$629.16
SUBTOTAL:							**$48,539.69**	**$134,804.30**	**$133,020.19**	**$59,383.75**	**$375,747.93**

		Hours (by Design Stage)				Cost (by Design Stage)				Total Cost
	Rate	30%	60%	90%	100%	30%	60%	90%	100%	$54,800.00
REIMBURSABLES & ALLOWANCES										**$54,800.00**
Site Utility Investigations (Potholing)	*$ 10,000.00*	0.5	0.5			$ 5,000.00	$ 5,000.00	$ -	$ -	$10,000.00
Owner's Allowance	*$ 40,000.00*	0.25	0.25	0.25	0.25	$ 10,000.00	$ 10,000.00	$ 10,000.00	$ 10,000.00	$40,000.00
Exterior Building Envelope Consultant	*$ 200.00*	8	8	8		$ 1,600.00	$ 1,600.00	$ 1,600.00	$ -	$4,800.00
TOTAL:										**$430,547.93**

Docusign Envelope ID: E6C32D3C-1F2C-430A-AE31-0184A77678E5

EXHIBIT C

INSURANCE REQUIREMENTS

1. General.

1.1 At the same time as execution of this Agreement, CM@Risk must furnish City a certificate of insurance on a standard insurance industry ACORD form. The ACORD form must be issued by an insurance company authorized to transact business in the State of Arizona possessing a current A.M. Best, Inc. rating of A-7, or better and legally authorized to do business in the State of Arizona with policies and forms satisfactory to City. Provided, however, the A.M. Best rating requirement will not be deemed to apply to required Workers' Compensation coverage.

1.2 CM@Risk and any of its subconsultants must procure and maintain, until all of their obligations have been discharged, including any warranty periods under this Agreement are satisfied, the insurances set forth below.

1.3 The insurance requirements set forth below are minimum requirements for this Agreement and in no way limit the indemnity covenants contained in this Agreement.

1.4 City in no way warrants that the minimum insurance limits contained in this Agreement are sufficient to protect CM@Risk from liabilities that might arise out of the performance of the Agreement services under this Agreement by CM@Risk, its agents, representatives, employees, subconsultants, and CM@Risk is free to purchase any additional insurance as may be determined necessary.

1.5 Failure to demand evidence of full compliance with the insurance requirements in this Agreement or failure to identify any insurance deficiency will not relieve CM@Risk from, nor will it be considered a waiver of its obligation to maintain the required insurance at all times during the performance of this Agreement.

1.6 Use of subconsultants: If any work is subcontracted in any way, CM@Risk must execute a written Agreement with subconsultant containing the same Indemnification Clause and Insurance Requirements as City requires of CM@Risk in this Agreement. CM@Risk is responsible for executing the Agreement with the subconsultant and obtaining Certificates of Insurance and verifying the insurance requirements.

2. Minimum Scope and Limits of Insurance. CM@Risk must provide coverage with limits of liability not less than those stated below.

2.1 *Commercial General Liability-Occurrence Form*. CM@Risk must maintain "occurrence" form Commercial General Liability insurance with a limit of not less than $2,000,000 for each occurrence, $4,000,000 aggregate. Said insurance must also include coverage for products and completed operations, independent contractors, personal

injury and advertising injury. If any Excess insurance is utilized to fulfill the requirements of this paragraph, the Excess insurance must be "follow form" equal or broader in coverage scope than underlying insurance.

2.2 *Automobile Liability-Any Auto or Owned, Hired and Non-Owned Vehicles*
Vehicle Liability: CM@Risk must maintain Business/Automobile Liability insurance with a limit of $1,000,000 each accident on CM@Risk owned, hired, and non-owned vehicles assigned to or used in the performance of CM@Risk's work or services under this Agreement. If any Excess or Umbrella insurance is utilized to fulfill the requirements of this paragraph, the Excess or Umbrella insurance must be "follow form" equal or broader in coverage scope than underlying insurance.

2.3 *Workers Compensation and Employers Liability Insurance*: CM@Risk must maintain Workers Compensation insurance to cover obligations imposed by federal and state statutes having jurisdiction of CM@Risk employees engaged in the performance of work or services under this Agreement and must also maintain Employers' Liability insurance of not less than $1,000,000 for each accident and $1,000,000 disease for each employee.

2.4 *Builders' Risk/Installation Floater Insurance.* The Contractor bears all responsibility for loss to all equipment or Work under construction. Unless waived in writing by the City the Contractor will purchase and maintain in force Builders' Risk/Installation Floater insurance on the entire Work until completed and accepted by the City. This insurance will be Special Causes of Loss policy form, (minimally including perils of fire, flood, lightning, explosion, windstorm and hail, smoke, aircraft and vehicles, riot and civil commotion, theft, vandalism, malicious mischief, and collapse), completed value, replacement cost policy form equal to the Agreement price and all subsequent modifications. The Contractor's Builders' Risk/Installation Floater insurance must be primary and not contributory.

Builders' Risk/Installation Floater insurance must cover the entire Work including reasonable compensation for architects and engineers' services and expenses and other "soft costs" made necessary by an insured loss. Builders' Risk/Installation Floater insurance must provide coverage from the time any covered property comes under the Contractor's control and or responsibility, and continue without interruption during course of construction, renovation and or installation, including any time during which any Project property or equipment is in transit, off Site, or while on Site for future use or installation. Insured property must include, but not be limited to, scaffolding, false work, and temporary buildings at the Site. This insurance must also cover the cost of removing debris, including demolition as may be legally required by operation of any law, ordinance, regulation or code.

The Contractor must also purchase and maintain Boiler and Machinery insurance with the same requirements as Builders' Risk/Installation Floater insurance cited above if the Work to be performed involves any exposures or insurable property normally covered under a Boiler and Machinery insurance policy or made necessary as required by law or testing requirements in the performance of this Agreement. The Contractor

Docusign Envelope ID: E6C32D3C-1F2C-430A-AE31-0184A77678E5

will be responsible for any and all deductibles under these policies and the Contractor waives all rights of recovery and subrogation against the City under the Contractor-Builders' Risk/Installation Floater insurance described herein.

Builders' Risk/Installation Floater Insurance must be maintained until whichever of the following first occurs: (i) final payment has been made; or, (ii) until no person or entity, other than the City, has an insurable interest in the property required to be covered. The Builders' Risk/Installation Floater insurance must be endorsed so that the insurance will not be canceled or lapse because of any partial use or occupancy by the City.

The Builders Risk/Installation Floater insurance must include as named insureds, the City, the Contractor, and all tiers of Subcontractors and others with an insurable interest in the Work who will be named as additional insureds unless they are able to provide the same level of coverage with the City and Contractor named as additional insureds. Certificates must contain a provision that the insurance will not be canceled or materially altered without at least 30 Days advance notice to the City. The City must also be named as a Loss Payee under the Builders' Risk/Installation Floater coverage. The Builders Risk/Installation Floater insurance must be written using the Special Causes of Loss policy form, replacement cost basis.

All rights of subrogation under the Builders Risk/Installation Floater insurance are, by this Agreement, waived against the City, its officers, officials, agents and employees.

The Contractor is responsible for payment of all deductibles under the Builders' Risk/Installation Floater insurance policy.

3. <u>Additional Policy Provisions Required</u>.

3.1 *Self-Insured Retentions or Deductibles.* Any self-insured retentions and deductibles must be declared and approved by City. If not approved, City may require that the insurer reduce or eliminate any deductible or self-insured retentions with respect to City, its officers, officials, agents, employees, and volunteers.

3.1.1. CM@Risk's insurance must contain broad form contractual liability coverage.

3.1.2. CM@Risk's insurance coverage must be primary insurance with respect to City, its officers, officials, agents, and employees. Any insurance or self-insurance maintained by City, its officers, officials, agents, and employees will be in excess of the coverage provided by CM@Risk and must not contribute to it.

3.1.3. CM@Risk's insurance must apply separately to each insured against whom claim is made or suit is brought, except with respect to the limits of the insurer's liability.

3.1.4. Coverage provided by CM@Risk must not be limited to the liability assumed under the indemnification provisions of this Agreement.

EXHIBIT C

3.1.5. The policies must contain a severability of interest clause and waiver of subrogation against City, its officers, officials, agents, and employees, for losses arising from Work performed by CM@Risk for City.

3.1.6. CM@Risk, its successors and or assigns, are required to maintain Commercial General Liability insurance as specified in this Agreement for a minimum period of 3 years following completion and acceptance of the Work. CM@Risk must submit a Certificate of Insurance evidencing Commercial General Liability insurance during this 3 year period containing all the Agreement insurance requirements, including naming City of Chandler, its agents, representatives, officers, directors, officials and employees as Additional Insured as required.

3.1.7. If a Certificate of Insurance is submitted as verification of coverage, City will reasonably rely upon the Certificate of Insurance as evidence of coverage but this acceptance and reliance will not waive or alter in any way the insurance requirements or obligations of this Agreement.

3.2. *Insurance Cancellation During Term of Agreement.*

3.2.1. If any of the required policies expire during the life of this Agreement, CM@Risk must forward renewal or replacement Certificates to City within 10 days after the renewal date containing all the required insurance provisions.

3.2.2. Each insurance policy required by the insurance provisions of this Agreement must provide the required coverage and must not be suspended, voided or canceled except after thirty (30) days prior written notice has been given to City, except when cancellation is for non-payment of premium, then ten (10) days prior notice may be given. Such notice must be sent directly to Chandler Law-Risk Management Department, Post Office Box 4008, Mailstop 628, Chandler, Arizona 85225. If any insurance company refuses to provide the required notice, CM@Risk or its insurance broker must notify City of any cancellation, suspension, non-renewal of any insurance within seven (7) days of receipt of insurers' notification to that effect.

3.3 *City as Additional Insured*. The policies are to contain, or be endorsed to contain, the following provisions:

3.3.1. The Commercial General Liability and Automobile Liability policies are to contain, or be endorsed to contain, the following provisions: City, its officers, officials, agents, and employees are additional insureds with respect to liability arising out of activities performed by, or on behalf of, CM@Risk including City's general supervision of CM@Risk; Products and Completed operations of CM@Risk; and automobiles owned, leased, hired, or borrowed by CM@Risk.

Docusign Envelope ID: E6C32D3C-1F2C-430A-AE31-0184A77678E5

3.3.2. City, its officers, officials, agents, and employees must be additional insureds to the full limits of liability purchased by CM@Risk even if those limits of liability are in excess of those required by this Agreement.

Docusign Envelope ID: E6C32D3C-1F2C-430A-AE31-0184A77678E5

EXHIBIT D

SUBMITTAL REQUIREMENTS FOR GMP/PRICE PROPOSAL
(Page 1 of 2)

1. Unless otherwise instructed, CM@Risk must submit 3 bound copies of any GMP Proposal(s) that includes the following documents, complies with the requirements specified in this Agreement and the following instructions. The GMP Proposal(s) must be organized as follows:

   A. Table of Contents
   B. Project Description
   C. GMP Proposal and the following attachments:
      i. Detailed Cost Estimate upon which the GMP is based and if for phased work, a total project Detailed Cost Estimate as of the time of the phased GMP Proposal.
      ii. List of Subcontractors
      iii. Schedule of Manufacturers and Suppliers
   D. Schedule of Values ("SOV")
   E. Project Schedule and a variance report to the Baseline Project Schedule
   F. Construction phasing/traffic control (if applicable)
   G. List of GMP Plans and Specifications

2. A summary breakdown of the GMP Proposal is shown on page 2 of this Exhibit, along with instructions regarding certain line items. The definitions included in Section 1 of the General Conditions apply to the line items, as appropriate, and set-forth the criteria to be used by CM@Risk in providing the required breakdown.

3. The most current version of CM@Risk's SOV must be submitted with the GMP Proposal. Supporting documents for the SOV, including the request for bids, copies of bids received, and clarification assumptions used for the particular bid item listed must be provided in an organized matter that correlates with the SOV.

4. The final accepted GMP must not include any clarifications/assumptions made by CM@Risk in the preparation of the GMP Proposal, unless any such clarification or assumption is agreed to in writing by City.

5. The most current version of CM@Risk's Detailed Project Schedule must be submitted with the GMP Proposal with a variance report from the project's Baseline Schedule. The Detailed Project Schedule must be prepared as specified in this Agreement.

6. A table listing all drawing sheets included in the GMP Plans and Specifications must be included with the GMP package. The table must include the following information: Sheet Number, Sheet Name, Sheet Version, and Date of Issuance. The GMP Proposal and Specifications, as defined, must be transmitted as specified in this Agreement.

NOTE: The submittal package must be kept as simple as possible all on 8 ½ x 11 sheets. Color or shading must be kept to a minimum. If used, make sure the color or shading will not affect the reproduction of the submittal in black and white.

Docusign Envelope ID: E6C32D3C-1F2C-430A-AE31-0184A77678E5

EXHIBIT D
CM@RISK GMP SUMMARY (PAGE 2 of 2)

Project Name: _____ Date: _____
Project Location: _____
City of Chandler Project No.: _____

	Amount
A. Cost of Work	
A1 Cost of Work (self perform, no mark-up)	$0.00
A2 Cost of Work (subcontractors, suppliers, materialmen)	$0.00
TOTAL COST OF WORK:	**$0.00**
B. General Conditions	**$0.00**
SUBTOTAL 1 (Cost of Work) (A + B):	**$0.00**
C. CM@Risk's Fee	**$0.00**
SUBTOTAL 2 (A + B + C):	**$0.00**
D. Bonds and Insurance (on Subtotal 1)	
D1 Bonds (Payment and Performance)	$0.00
D2 Insurance	$0.00
TOTAL BONDS & INSURANCE:	**$0.00**
SUBTOTAL 3 (SUBTOTAL 2 + BONDS & INS):	**$0.00**
E. Sales Tax	
E1 Sales Tax	$0.00
E2 Tax Credits	$0.00
TOTAL SALES TAX:	**$0.00**
F. Approved Allowances	
F1 Owner's Allowance	$0.00
F2 Owner's Allowance for Water and Wastewater	$0.00
TOTAL ALLOWANCES:	**$0.00**
G. Contingencies	
G1	$0.00
G2	$0.00
TOTAL CONTINGENCIES:	**$0.00**
TOTAL GMP PROPOSAL:	**$0.00**

Establishment of Values:

a. Cost of Work (A) and Allowances (F) to be submitted with GMP Proposal.
b. General Conditions Cost (B) to be established in Baseline Cost Model.
c. CM@Risk Fee as set forth in Section 3.7.3 of this Contract

Docusign Envelope ID: E6C32D3C-1F2C-430A-AE31-0184A77678E5

EXHIBIT E
GENERAL CONDITIONS
AND
GENERAL CONDITIONS APPENDICES

Docusign Envelope ID: E6C32D3C-1F2C-430A-AE31-0184A77678E5

GENERAL CONDITIONS

Approved date: July 20, 2022

Docusign Envelope ID: E6C32D3C-1F2C-430A-AE31-0184A77678E5

TABLE OF CONTENTS

SECTION 1 - SCOPE OF THESE GENERAL CONDITIONS 3
SECTION 2 - GENERAL DEFINITIONS 3
SECTION 3 - STANDARD SPECIFICATIONS AND DETAILS 7
SECTION 4 - CONTRACTOR'S RESPONSIBILITIES FOR CONSTRUCTION SERVICES 8
SECTION 5 - CITY RESPONSIBILITIES 27
SECTION 6 - AGREEMENT TIME 29
SECTION 7 - AGREEMENT PRICE 35
SECTION 8 - PAYMENT 35
SECTION 9 - CHANGES TO THE AGREEMENT 40
SECTION 10 - SUSPENSION AND TERMINATION 43
SECTION 11 - INSURANCE AND BONDS 44
SECTION 12 - INDEMNIFICATION 49
SECTION 13 - DISPUTE RESOLUTION 49
SECTION 14 - MISCELLANEOUS PROVISIONS 50
SECTION 15 - PROVISIONS APPLICABLE SOLELY TO GMP AND COST-BASED AGREEMENTS, CHANGE ORDERS, AND JOB ORDERS 57
SECTION 16 - PROVISIONS APPLICABLE SOLELY TO JOB ORDER AGREEMENTS (JOC) 61
SECTION 17 - PROVISIONS APPLICABLE SOLELY TO PRE-CONSTRUCTION SERVICES FOR CONSTRUCTION MANAGER AT RISK 66
SECTION 18 - APPENDICES ..... APP-1 of 30

Appendix 1 – Policy Statement for Calculating Delays and Damages
Appendix 2 – Cost Reduction Incentive Proposals for Design Bid Build Agreements
Appendix 3 – Contractor's Affidavit Regarding Settlement of Claims
Appendix 4 – Forms of Performance Bond
Appendix 5 – Forms of Payment Bond
Appendix 6 – Dispute Resolution
Appendix 7 – Certificate of Completion
Appendix 8 – Construction Sign Detail
Appendix 9 – Cost of the Work (Applicable solely to Construction Manager at Risk and Job Order Contracting)
Appendix 10 Landscape Establishment Period

Docusign Envelope ID: E6C32D3C-1F2C-430A-AE31-0184A77678E5

SECTION 1 - SCOPE OF THESE GENERAL CONDITIONS

These General Conditions encompass provisions that apply, and are incorporated into all construction Agreements entered into by the City of Chandler, unless otherwise specifically excluded in the executed Agreement.

SECTION 2 - GENERAL DEFINITIONS

Allowance : A specific amount for a specific item of Work, if any, that City agrees has not been sufficiently designed, detailed, or selected (including design changes from 90% to 100% as authorized by and at the discretion of the City) at the time the Agreement Price is agreed to for Contractor to provide a definitive price.

Alternate Systems Evaluations or Alternative Analysis: Alternatives for design, means and methods or other scope considerations that are evaluated using value analysis principles and have the potential to reduce construction costs while still delivering a quality and functional Project that meets City requirements.

Change Order: A written instrument issued after execution of the Agreement Documents signed by City and Contractor, stating their agreement upon all of the following: the addition, deletion or revision in the scope of services or deliverables; the amount of the adjustment to the Agreement Price, the extent of the adjustment to the Agreement Time, or modifications of other agreement terms. The Agreement Price and the Agreement Time may be changed only by Change Order.

Consultant: Person or firm that provides professional services.

City (Owner or OWNER): City of Chandler, a municipal corporation, with whom Contractor has entered into the Agreement and for whom the Work or Services are to be provided pursuant to the Agreement(s).

Contingent Bid Items: This is a minor bid item which is likely, but not certain, to occur during the course of work. If the Engineer determines that this work is required, the Contractor will accomplish the work and payment will be made based on the contingent unit bid price included in the proposal. Since the quantity listed in the proposal is primarily for bid comparison, the amount of work required by the Engineer may vary materially from this.

Agreement: The written agreement executed between City and Contractor, including all of the Agreement Documents.

Agreement Documents: The documents which together form the Agreement between City and Contractor, as identified in Article 2 of the Agreement, or are otherwise incorporated into the Agreement, including the Agreement, the exhibits thereto, these General Conditions, any Notice to Proceed, and any Job Order (if applicable), the Plans and Specifications, Project Schedule, written and properly executed Change Orders, MAG Specifications and City's amendments thereto, and any other documents so designated in the Agreement.

Agreement Price: The agreed-upon price to be paid to Contractor for full, timely, and acceptable completion of the Work or Services under the terms of the Agreement.

Agreement Time(s): The number of calendar days or the dates related to the applicable phase, Substantial Completion, or Final Acceptance as stated in Agreement Documents. Agreement Time starts

Docusign Envelope ID: E6C32D3C-1F2C-430A-AE31-0184A77678E5

with the Notice to Proceed (NTP) and ends with Final Acceptance. The Agreement Time is set forth in the Agreement and is based upon the Project Schedule agreed to by City in writing.

Contractor: The person or business association with whom City has entered into an agreement for construction related Work or Services in relation to the Project at issue.

Contractor Payment Request: The form that is accepted by City and used by Contractor in requesting progress payments or final payment and which must include such supporting documentation as is required by the Agreement Documents or City.

Construction Budget: The City's budget for construction of the Project.

Construction Documents: The Plans, Specifications, and Drawings prepared and issued by the Design Professional and approved by City for construction, meaning the documents are sealed by the Design Professional (as required), acceptable for permitting and incorporated into the Agreement by this reference. All amendments and modifications to the Construction Documents must be approved in writing by City prior to incorporation into the Agreement.

Cost of the Work: The term Cost of the Work will mean costs necessarily incurred by Contractor in the proper performance of the Work. Such costs will be at rates not higher than the standard paid at the place of the Project except with prior consent of City.

Critical Path Method (CPM): A scheduling technique which identifies the logical sequence of the activities occurring in a Construction Project, the anticipated time required to complete each activity in the Project, and the activities that must be completed on schedule to finish the Project within the anticipated time. Typically, activities are arranged in a network that shows both activities and their dependencies. CPM is also used as a management technique which enables contracting parties to predict when activities may occur so that resources can be effectively used and limitations can be identified.

Critical Path: Critical Path is the sequence of project network activities which add up to the longest overall duration. Once established in the Project Schedule, the Critical Path for the Project must not be changed without prior written approval of City.

Day: Calendar day(s) unless otherwise specifically stated in the Agreement Documents.

Design Professional: The qualified, licensed person, firm or corporation who furnishes design and construction administration services required under the Agreement Documents. These services may include, but are not limited to: development of Construction Drawings and Documents, review of Contractor Submittal(s), review of and response to Requests for Information, approval and certification of progress payment applications, construction administration, and construction agreement close out.

Differing Site Conditions: Concealed or latent physical conditions or subsurface conditions at the Site that, (i) materially differ from the conditions indicated in the Agreement Documents, or (ii) are of an unusual nature, differing materially from the conditions ordinarily encountered and generally recognized as inherent in the Work at the general area of the Site. Caliche, rock, hard-digging or sandy/silty soil encountered on a project is not considered a "Differing Site Condition."

Drawings (Plans): Documents, which visually represent the scope, extent and character of the Work to be furnished and performed by Contractor during the construction phase and which have been prepared

Docusign Envelope ID: E6C32D3C-1F2C-430A-AE31-0184A77678E5

or approved by the Design Professional and City. These documents include Drawings that have reached a sufficient state of completion and released by Design Professional solely for the purposes of review and use in performing constructability or bid-ability reviews by Contractor and in preparing cost estimates (e.g. Master Planning and Programming, Schematic Design, Design Development, and Construction Drawings), but *"not for construction*." Shop Drawings are not Drawings as so defined.

Final Acceptance: The City's acceptance of the facility or project from the Contractor after all Work is completed, tested, and inspected in accordance with the Agreement requirements. Final Acceptance results in a Letter of Acceptance (LOA).

Fixed Price: A fixed price or amount for an Agreement Price, Scope of Work, materials, or other item under an Agreement, Change Order, or other agreement, which City agrees, in writing, to pay instead of the actual cost.

Float: The number of Days by which an activity can be delayed without lengthening the Critical Path and extending the Agreement Time. Unless otherwise expressly agreed in writing, all Float belongs to City.

Laws, Regulations, or Legal Requirements: Any and all applicable laws, rules, regulations, ordinances, codes and orders applicable to the Project of any and all governmental bodies, agencies, authorities and courts having jurisdiction and any applicable provisions of the Development Agreement for the Project (if any), including, without limitation, those provisions relating to the design and construction of the Project.

Line Item: The individual elements of Work identified on a bid or other schedule and associated with a price or a unit price and quantity particular to that individual element of the Work. Also refers to individual items of work within the Schedule of Values.

Liquidated Damages: Designated damages for the City to collect as compensation upon a specific breach (example: late delivery).

Long-Lead Item: Long-lead item refers to the equipment, product, or system that is identified at the earliest stage of a project to have a delivery time long enough to affect directly the Critical Path/the overall lead time of the project.

MAG: The Maricopa Association of Governments.

MAG Specifications: The most current version of the Uniform Standard Specifications for Public Works Construction published by MAG.

MAG Standard Details: The most current version of the Uniform Standard Details as published by MAG.

Minor change: A change in the Work having no impact on cost or time or the City-approved design intent, as determined by City.

Notice to Proceed (NTP): A written notice given by City to Contractor fixing the date on which Contractor will start to perform Contractor's obligations under the Agreement.

Project: The Project specified in the Agreement (including a Job Order).

Project Manager: The Project Manager designated in Article 1 of the Agreement, or any successor thereto

Docusign Envelope ID: E6C32D3C-1F2C-430A-AE31-0184A77678E5

designated by City. The Project Manager has the authority to act on behalf of City, as delineated and limited by the Agreement Documents and applicable law. And City will communicate with Contractor through the Project Manager. However, the Project Manager has no authority to bind City or City Council in contravention of any City code, State or Federal statute or regulation, or these General Conditions.

Project Schedule: The schedule for the completion of the Project agreed to and required by City.

Project Specific Conditions: Additional conditions which apply to the specific Project and Scope of Work which are set forth in Exhibit D of the Agreement.

Project Team: The Project Team consisting of the Design Professional, Contractor, Project Manager, and such others as City may designate.

Punch List: The list initially prepared by Contractor pursuant to the Agreement Documents, reviewed and supplemented by the Project Manager (and at the sole option of the Project Manager, the Design Professional) and approved by City containing items of incomplete work not impacting Substantial Completion, if allowed for under the Agreement, and to be completed or corrected by Contractor after Substantial Completion and before Final Acceptance in accordance with the Agreement Documents.

Quality Assurance (QA) Testing: Testing performed to verify the accuracy and applicability of the QC testing results and to ascertain that the materials installed meet the specified levels of quality in accordance with the Agreement Documents.

Quality Control (QC) Testing: Testing performed to assure that the materials installed comply with the requirements in the Agreement Documents.

Requests for Information (RFIs): Formal written request from Contractor to City or Design Professional for the Project seeking clarification or additional information needed for Contractor to properly complete the Work or Services under the Agreement. City may require RFI's to be submitted on a specific form or in a specified format.

Schedule of Values (SOV): The specified document prepared by Contractor, and approved and accepted by City, which divides the Agreement Price into pay items, such that the sum of all pay items equals the Agreement Price for the construction phase Work, or for any portion of the Work having a separate specified Agreement Price.

Scope of Work: The scope of work agreed to or required by City and incorporated into the Agreement as Exhibit A.

Shop Drawings: All drawings, diagrams, schedules and other data specifically prepared for the Work by Contractor or a Subcontractor, Sub-subcontractor, manufacturer, supplier or distributor to illustrate some portion of the Work.

Site: The land or premises on which the Project is located.

Specifications: The part(s) of the Agreement Documents for the construction phase consisting of written technical descriptions of materials, equipment, construction systems, standards and workmanship as applied to the Work and certain administrative details applicable thereto. Where specified, the Project must be constructed using the current Uniform Standard Specifications and Details for Public Works

Docusign Envelope ID: E6C32D3C-1F2C-430A-AE31-0184A77678E5

Construction as furnished by the Maricopa Association of Governments, as amended by City.

Subconsultant: A person, firm or corporation having an Agreement with Consultant/Contractor to furnish services required as its independent professional associate or consultant with respect to the Project.

Subcontractor: An individual or firm having a direct Agreement with Contractor or any other individual or firm having an Agreement with the aforesaid contractors at any tier, who undertakes to perform a part of pre-construction services or construction phase Work at the Site for which Contractor is responsible. Subcontractors must be selected through the Subcontractor selection process described in the Agreement Documents, if any.

Substantial Completion: The date when the City determines that the Work (or separable units of Phases as provided in the Agreement Documents) is essentially and satisfactorily complete in accordance with the Agreement Documents such that the Project is ready for use by the City for its intended purpose, opening to the general public, full occupancy or use by City (including, without limitation, all separate units, or rooms, facilities, access, income-generating areas, and all areas serving the general public, as applicable, must be ready for full operation without material inconvenience or discomfort), including, to the extent applicable to the Work, the following: all materials, equipment, systems, controls, features, facilities, accessories, and similar elements are installed in the proper manner and in operating condition, inspected, and approved; surfaces have been painted; masonry and concrete cleaned with any sealer or other finish applied; utilities and systems connected and functioning; site work complete; permanent heating, ventilation, air conditioning, vertical transportation, and other systems properly operating with proper controls; lighting and electrical systems installed, operable and controlled; paving completed, signage installed, and other work as applicable, has been performed to a similar state of essential and satisfactory completion.

Supplier: A manufacturer, fabricator, distributor, or vendor having a direct Agreement with Contractor or with any Subcontractor to furnish materials or equipment to be incorporated in the construction phase Work by Contractor or any Subcontractor.

Total Float: Number of Days by which pre-construction services or construction phase Work or any part of the same may be delayed without necessarily extending a pertinent Agreement Time or schedule milestone in the Project Schedule.

Work: The entire completion of construction or the various separately identifiable parts thereof, required to be furnished during the construction phase. Work includes and is the result of performing or furnishing labor and furnishing and incorporating materials, resources and equipment into the construction, and performing or furnishing services and documents as required by the Agreement Documents for the construction phase.

Writing: Typing, printing, photography and other modes of representing or reproducing words in a visible form, including email, and expressions.

SECTION 3 - STANDARD SPECIFICATIONS AND DETAILS

3.1 City operates under the latest revision of the MAG Specifications and MAG Standard Details as amended by City. City's current amendment to the MAG Specifications, part of the City's Unified Development Manual, may be found and downloaded from City's website at http://www.chandleraz.gov.

Docusign Envelope ID: E6C32D3C-1F2C-430A-AE31-0184A77678E5

3.2 Copies of the MAG Specifications and MAG Standard Details are available at the Maricopa Association of Governments office, 302 N. 1st Avenue, Suite 300, Phoenix, Arizona. They may also be downloaded from their website at: http://www.azmag.gov/Newsroom/Publications

3.3 The MAG Specifications and Standard Details and City's amendments thereto are incorporated into the Agreement by this reference.

SECTION 4 - CONTRACTOR'S RESPONSIBILITIES FOR CONSTRUCTION SERVICES

4.1 GENERAL

4.1.1 Contractor must construct the Work in accordance with the Agreement Documents and as outlined in Exhibit A of the Agreement to the satisfaction of City, exercising the degree of professional care, skill, diligence, quality and judgment that a professional construction manager engaged, experienced and specializing in the construction management of construction and facilities of similar scope, function, size, quality, complexity and detail in urban areas throughout the United States comparable to Chandler, Arizona would exercise at such time, under similar conditions. Contractor must, at all times, perform the Work in conformance with sound and generally accepted engineering principles and construction management and construction contracting practices.

4.1.2 If Contractor observes errors, discrepancies or omissions in the Agreement Documents, Contractor must promptly notify the Design Professional and City and request clarification. If Contractor, with the exercise of reasonable care, should have recognized such error, inconsistency, omission, or difference and fails to report it to City, and if Contractor proceeds with the Work affected by such observed errors, discrepancies or omissions, without receiving such clarifications, Contractor does so at its own risk and will be liable to City for damages resulting from proceeding without clarification.

4.1.3 Project Team and agents of each of them, testing agencies and governmental agencies with jurisdictional interests will be provided access to the Work at reasonable times for their observation, inspection, and testing. Contractor must provide proper and safe conditions for such access.

4.1.4 Contractor must comply with, and require all Subcontractors to comply with, the Arizona Contractors' license laws, including all requirements with respect to being duly registered and licensed.

4.1.5 Contractor must ensure that all employees performing any Work for which Contractor is responsible have a legal right to live and work in the United States. In addition, all compensation of any such employee must meet all applicable requirements of the Fair Labor Standards Act (FLSA) and Federal Minimum Wage laws.

4.1.6 Contractor must comply with the Immigration Reform and Control Act of 1986 (IRCA). Contractor understands and acknowledges the applicability of the IRCA activities. Contractor agrees to comply with the IRCA while performing their work and to permit City inspection of Contractor personnel records to verify such compliance.

4.1.7 Pursuant to MAG Specifications §§ 107.4, Contractor must report immediately any discovery of archeological ruins or artifacts. Excavation must stop immediately so that City can decide on the pertinent steps to follow such discovery.

Docusign Envelope ID: E6C32D3C-1F2C-430A-AE31-0184A77678E5

4.1.8 All property owners that may be affected by the proposed construction activities must be notified of the scope, duration of the construction activities and possible interference with their day-to-day activities by Contractor prior to start of construction. In addition, individual residential or commercial interferences, such as driveway restrictions, water outages, and all other Work adjacent to residence/business, require 48-hour notification in advance of specific adjoining Work. Notification may be through door hangers or other procedures approved by the City.

4.1.9 Access must be maintained to adjacent properties at all times during construction. Where property has more than one point of access, no more than one access will be restricted or closed at any one time. Access to adjacent private driveways will be maintained during all non-working hours.

4.1.10 Contractor must furnish and erect construction signs in accordance with Project Specifications. The signs must be professionally prepared and subject to approval by City, must be maintained by Contractor for the duration of the project, and must be removed by Contractor during the final project clean up.

4.1.11 The number of signs required, the size, shape, installation requirements and information to be included for construction signs is established on the detail sheet, provided, however, signs must be a minimum of 4 foot by 8 foot and must be installed so that the bottom of the sign is at least 4 foot above grade. No direct payment will be made for furnishing and erecting construction signs. The cost thereof must be included in other items for which direct payment is made. Sign locations will be determined by City.

4.1.12 All required construction signs must be installed by Contractor within 7 Days of Notice to Proceed.

4.1.13 The Work to be accomplished under these Agreement Documents has been designed for City by a Design Professional retained by City for this purpose. It is understood that normal construction Administration for the purpose of interpretation of the Agreement Documents is provided by City. Should any services of the Design Professional be required to assist in the corrections of errors or omissions by Contractor, or services of the Design Professional be required because of changes in structure or equipment where Contractor has requested approval of substitute methods or material, or any other items detailed herein below, those services will be provided by the Design Professional at the standard hourly rates previously negotiated with City and must be paid for by the Contractor.

4.1.14 Contractor must reimburse City for costs incurred by the Design Professional for additional services to the Project through no fault of City or the Design Professional including, but not limited to, the following conditions:

a. Additional Site visits, investigations, inspections, design work or reports by the Design Professional which are required due to damages to existing facilities or completed Work caused by the Contractor in his performance, Contractor's negligence, or Contractor's Work which is rejected as defective or as failing to conform to the Agreement Documents;

b. Design Professional construction phase services rendered on the project during the time the project remains incomplete after the Agreement date of final completion will be charged to Contractor at a rate previously negotiated City; and

Docusign Envelope ID: E6C32D3C-1F2C-430A-AE31-0184A77678E5

c. All retesting required due to the failure of Contractor's Work to meet the requirements of the Agreement Documents will be at Contractor's expense. All standby and travel time by the City's testing lab, the Design Professional or City due to Contractor's inability to be prepared for testing at the agreed upon time will be at the Contractor's expense.

4.1.15 City may withhold from any payment otherwise due to Contractor any amounts necessary to pay the Design Professional for such additional services as provided herein above.

4.1.16 Contractor will not be required to bear additional costs incurred by City due to errors by the Design Professional.

4.2 **CONTRACTOR'S PRE-AGREEMENT AND PRE-WORK DELIVERABLES**

4.2.1 Prior to award of the Agreement, Contractor must execute Agreement and deliver to City. Failure to do so may delay Agreement award. Contractor must also provide to City its Contractor's License classification and number and its Federal Tax I.D. number.

4.2.2 Before beginning any Work under the Agreement, Agreement must be fully executed by City.

4.2.3 After Agreement award, City will issue to Contractor an award letter. At that time Contractor must deliver to City such bonds and certificates of insurance with endorsements in such amounts (and other evidence of insurance requested by City) required under Section 11 of these General Conditions, and as the Agreement requires.

4.2.4 As evidence of Workmen's Compensation Insurance, Contractor must, upon request, provide a letter of certification from the Industrial Commission of Arizona that Contractor is insured by the State Compensation Fund or is an authorized self-insurer or a certificate of insurance issued by an insurance company authorized by the Insurance Department of Arizona to write Workmen's Compensation and Occupational Disease Insurance in the State of Arizona.

4.2.5 Within 10 Days of the date of the executed Agreement letter issued by City, Contractor must submit to City for review and acceptance the following items:

4.2.5.1 Comprehensive construction Project Schedule including a Critical Path Method (CPM) diagram schedule as described in Section 6.2. Project Schedule must be in Microsoft Project standard file format. Within 10 Days of receipt of City's comments, Contractor must make all required corrections, adjustments, and additions to complete the Project Schedule and resubmit to City for review.

4.2.5.2 Preliminary schedule of submittals and Shop Drawings. Within 10 Days of receipt of City's comments, Contractor must submit the corrected and completed schedule of Shop Drawings submissions for approval. Contractor's schedule of Shop Drawings and sample submittals will be acceptable to City if it provides a workable arrangement for reviewing and processing the required submittals.

4.2.5.3 Schedule of Values in a form specified by City reflecting the subcontracts and other categories that will be used to submit Pay Applications for the Work. The total amount of the Schedule of Values must not be greater than the Agreement Price. The Schedule of Values will be reviewed at the Pre-Construction Conference and revised by Contractor within 10 Days after Pre-Construction Conference in response to comments and questions from

Docusign Envelope ID: E6C32D3C-1F2C-430A-AE31-0184A77678E5

City. Once accepted by City in writing, the Schedule of Values for the Project must not be changed without the prior written approval of City.

4.2.6 Video Recording Requirement. Prior to performing any Work, Contractor must document the existing conditions of the Site, all other areas where Work will occur and all adjacent areas that may be impacted by the Work via digital video format. Contractor must video record and index all areas, features, buildings and other public and private improvements that could potentially be impacted by the Work. Video recording must be coordinated with City. When video recording private property, Contractor must also coordinate the video recording with the private property owner, if possible. Contractor must provide City with a copy of said digital video format prior to performing any Work.

4.2.7 Aerial Drone Construction Photography.

4.2.7.1 If Agreement duration is greater than 90 calendar days, Contractor must engage a professional unmanned aerial vehicle (UAV) aerial pilot to photograph the Site prior to construction mobilization, at three-month intervals during construction, and following final inspection. Drone camera specifications must meet the following minimum requirements:

a. 1-inch CMOS
b. Pixels: 20M
c. FOV 84 8.8 mm/24 mm (35 mm format equivalent) f/2.8-f/11 auto focus at 1 m-
d. For photographing: 16.9 Aspect Ratio: 5472x3078
e. For video shooting: MP4/MOV/H.264
f. FHD: 1920x1080 120p @100Mbps
g. File format: High Definition (HD) JPEG for digital photos and HD MPEG 4 for digital video.
h. All metadata to be recorded including GPS data and preserved with photographs provided.

Interval	**JPEG**
3 month intervals	At an altitude (AGL) between 70-90 ft.
3 month intervals	Images to be taken every 50-100 ft. to be determined based on project scope.

4.2.7.2 Drone photos to be taken in sequential geographical order and then organized and provided in the same manner unless otherwise specified.

4.2.7.3 Photos to be provided digitally via an online file share service and/or by a USB drive to contractor.

4.2.7.4 Drone pilots to obey ALL local (city, county, state) UAV regulations as well as FAA UAV guidelines including, but not limited to, conducting all flights during daylight hours, not exceeding maximum altitude ceilings (depending on area), not flying over people, yielding to other aircraft.

4.2.7.5 Drone pilots must fly drone within visual line of sight (VSOL) and have visual spotter when needed. Drone pilots only to operate in favorable weather conditions when minimum visibility is 3 miles or greater.

4.2.7.6 Drone pilots to conduct a preflight checklist and visually inspect the entire flight path prior to flying to ensure a safe flight.

Docusign Envelope ID: E6C32D3C-1F2C-430A-AE31-0184A77678E5

4.2.7.7 Airspace Authorizations. Operations in Class G airspace are allowed without air traffic control (ATC) permission. Operations in Class B, C, D and E airspace need ATC authorization. Drone pilots to schedule each flight in advance and based on airspace if required will notify nearby airports/control towers, etc.

4.2.8 Government Approvals and Permits.

4.2.8.1 Contractor must obtain all necessary permits for the Work and pay all applicable fees, unless otherwise noted on the Plans and in the Specifications. City permit fees will be paid internally by City. For bidding purposes, an allowance for all permit fees is included in the bid schedule under the item "allowance for permit fees." The Contractor will be paid for the actual cost of the permit fees upon submitting a receipt showing the fee Contractor has paid. Excluded from the above allowance are items such as all costs incurred by the Contractor in securing the permit except for the actual permit fee established by the agency, cost for all shutdowns or outages, cost for pole bracing, cost of permits for construction water, cost of construction water, cost for any additional insurance requirements, cost for any licenses, and other similar type costs. Contractor is specifically notified of the need to obtain the necessary environmental permits or file the necessary environmental and regulatory permit notices.

4.2.8.2 Copies of all permits and the associated notices must be provided to City prior to starting the permitted activity.

4.3 PRE-CONSTRUCTION CONFERENCE

4.3.1 Prior to the commencement of any Work, City will schedule a Pre-Construction Conference.

4.3.2 The purpose of this Conference is to establish a working relationship between Contractor, the utility firms, and various City agencies. The agenda will include critical elements of the Work schedule, submittal schedule, cost breakdown of major lump sum items, Payment Requests and processing, coordination with the involved utility firms, and emergency telephone numbers for all representatives involved in the course of construction.

4.3.3 Minimum attendance by Contractor at any mandatory meeting with City must be (1) Contractor's Representative, who is authorized to execute and sign documents on behalf of the firm, (2) Contractor's on-site Superintendent, and (3) Contractor's Safety Office, or other employee responsible for safety.

4.4 PERFORMANCE OF THE WORK (INCLUDING FIELD MEASUREMENTS, SUBCONTRACTORS, AND SUPPLIERS)

4.4.1 Unless otherwise provided in the Agreement Documents to be the responsibility of City or a separate Contractor, Contractor must provide through itself or Subcontractors the necessary supervision, labor, inspection, testing, start-up, material, equipment, machinery, temporary utilities and other temporary facilities to permit Contractor to complete the Work consistent with the Agreement Documents.

4.4.2 Contractor must perform all construction activities efficiently and with the requisite expertise, skill and competence to satisfy the requirements of the Agreement Documents. Contractor must at all times exercise complete and exclusive control over the means, methods, safety, sequences and techniques of construction.

4.4.3 Contractor's Superintendent must be present at the Site at all times that material Work

Docusign Envelope ID: E6C32D3C-1F2C-430A-AE31-0184A77678E5

under this Agreement is taking place. Contractor's Superintendent or designee must be present at the Site at all times any other Work under this Agreement is taking place. Superintendent must not be replaced without written notice to City. Whenever the Superintendent is not present at a particular part of the Work where the City or Design Professional may desire to inform the Contractor relative to interpretation of the Drawings and Specifications or to disapproval or rejection of materials or Work performed, the City or Design Professional may provide such information in writing to the foreman or other worker in charge of the particular part of the Work in reference to which the information is given. Information so given will be as binding as if given to the Superintendent.

4.4.4 All elements of the Work must be under the direct supervision of a foreman or his designated representative on the Site who must have the authority to take actions required to properly carry out that particular element of the Work.

4.4.5 Working Hours. Except in connection with the safety or protection of persons or the Work or property at the Site or adjacent thereto, and except as otherwise indicated, all Work at the Site must be performed during regular working hours, and Contractor will not permit overtime work or the performance of Work on Saturday, Sunday or any legal holiday without City's written consent given after prior written notice to City. If it will become absolutely necessary to perform Work at night or on Saturdays, Sundays or legal holidays, the City must be informed at least 24 hours in advance of the beginning of performance of such Work. Only such Work will be done at night as can be done satisfactorily as determined by the City. Good lighting and all other necessary facilities for carrying out and inspecting the Work must be provided and maintained at all points where such Work is being done. Further, unless such non-normal work hours are performed at City's request or required by the Agreement Documents, Contractor must pay to City all additional costs incurred by City by reason of such non-normal working hours. Expenses incurred by City for overtime compensation must be reimbursed by Contractor as follows: (i) City staff at the rate set forth in current City Fee Schedule as published on City website, (ii) Design Professional and staff at the standard hourly rates previously negotiated with City, and (iii) all others at actual cost plus ten percent administrative overhead. Such costs may be deducted by City from any payments due to Contractor. Provided, however, if overtime work or work during other than normal hours is at the request of City and not due to Contractor delay, City will pay the cost of City overtime expenses.

4.4.6 Where the Agreement Documents require that a particular product be installed or applied by an applicator approved by the manufacturer, it is Contractor's responsibility to ensure the Subcontractor employed for such work is approved by the manufacturer. All materials and equipment must be stored, applied, installed, connected, erected, used, cleaned and conditioned in accordance with the instructions of the applicable manufacturer, fabricator, supplier or distributor, except as otherwise provided in the Agreement Documents; but no provisions of any such instructions will be effective to impose on City of Design Professional responsibility for the means, methods, techniques, sequences or procedures of construction or for safety precautions incident thereto.

4.4.7 Before starting the Work, Contractor must carefully study and compare the various Plans, Drawings, other Agreement Documents, and Specifications relative to that portion of the Work, as well as the information furnished by City, must take field measurements of any existing conditions related to that portion of the Work and must observe any conditions at the Site affecting it. The exactness of grades, elevations, dimensions, or locations given on any Drawings, or the Work installed by other contractors, is not guaranteed by City.

Docusign Envelope ID: E6C32D3C-1F2C-430A-AE31-0184A77678E5

4.4.8 Before ordering materials or doing Work, Contractor and each Subcontractor must verify measurements at the Site and will be responsible for the correctness of such measurements. No extra charge or compensation will be allowed because of differences between actual dimensions and the dimensions indicated on the Agreement Documents, including the Drawings.

4.4.9 Ground Level Construction Photography.

4.4.9.1 The Contractor must furnish progress photographs of the project. The photographer selected by the Contractor must be approved by the City and must be either a commercial photographer or an individual experienced and equipped for such photography.

4.4.9.2 The Contractor must deliver to City all photographs taken during that period with each application for payment. If the current photographs do not accompany the application, the application will not be reviewed and will be returned to the Contractor as incomplete.

4.4.9.3 Photographs must be identified by use of typewritten labels affixed to the back of the photograph. The label must provide a description of the view, the direction from which the photograph was taken, the name of the project, City's project number, the name of Contractor and the date of the photography. The stationing must also be included for all pipeline installations.

4.4.9.4 Photographs must be taken during the construction period and must be of aesthetic composition and depict the progress of the Work from the beginning of construction through and including the finished product. City may vary the specified frequency so that significant progress or changes can be recorded on the photographs.

4.4.10 Underground Facilities.

4.4.10.1 The existence and number of facilities as shown on the Plans are estimated from information furnished by the particular utility. Contractor is responsible for field verification and location of all utilities prior to the start of construction. No field work will be allowed to start until Contractor has contacted Arizona 811 and all affected utilities have been located. In addition, Contractor must expose and physically locate all potentially conflicting utilities prior to construction. The actual locations of the utilities must be compared to locations shown on the Plans and any required changes in alignment and grade must be made at the time of construction in consultation with Project Manager. It is generally recognized and Contractor should anticipate that information from Arizona 811 or information from utility companies during project design, frequently fails to disclose all underground facilities. The fact that more utility lines or other underground facilities are located in the Project Site than shown on the Project Plans does not constitute an "unforeseen Condition" and such undisclosed underground facilities do not differ materially from the conditions which Contractor should expect. The provisions of Sections 105.4, 105.6, 107.11 and 109.8.1 of the MAG Uniform Standard Specifications for Public Works Construction apply and are incorporated herein by this reference.

4.4.10.2 Contractor is responsible for all coordination with utility companies. The provisions of Sections 105.4, 105.6, 107.11 and 109.8.1 of the MAG Uniform Standard Specifications for Public Works Construction strictly apply and no additional compensation will be paid to Contractor for delays due to utility work on the project.

4.4.11 Relocation of Existing Water Meters. When a service line has been extended and a line

Docusign Envelope ID: E6C32D3C-1F2C-430A-AE31-0184A77678E5

setter installed in a meter box, City forces will re-install meter. No compression fittings will be utilized.

4.4.12 Water Turn-On or Turn-Off.

4.4.12.1 Contractor must coordinate all water line turn-ons and turn-offs through the City. Application must be made to the Municipal Utility Division and Contractor must pay the established charges. The City will close existing valves, but will not guarantee a bone-dry Shutdown.

4.4.12.2 Contractor must notify all customers affected by the turn-off not less than 48 hours in advance. Notification must be in writing, must give the reason for the turn-off and must give the estimated time and duration that water service will be interrupted. Contractor is also notified that water turn-off will not be permitted on the Day before and after Thanksgiving Day and Christmas Day.

4.4.12.3 No direct payment will be made to Contractor for turn-ons or turn-offs. Costs associated therewith will be included in other items for which direct payment is made.

4.4.13 Tests and Inspections.

4.4.13.1 Contractor must give City timely (at a minimum, twenty-four hours) notice of readiness of the Work for all required inspections, tests or approvals. Contractor must give timely notice to City in advance of backfilling or otherwise covering any part of the Work so that city representative may, if desired, observe such part of the Work before it is concealed. Whenever Contractor varies the normal period during which Work or any portion of it is carried on each Day, Contractor must give timely notice to City so that city representative may, if desired, be present to observe the Work in progress. If Contractor fails to give such timely notice, any Work done in the absence of city representative will be subject to rejection. If Contractor gives such notice to City, but then is not ready for such inspections, tests, approvals or observations at the time so noticed, Contractor must reimburse City for all costs incurred by the attendance of city representatives.

4.4.13.2 If any law, ordinance, rule, regulation, code, or orders of any public body having jurisdiction requires any Work (or part thereof) to be inspected, tested or approved, Contractor (unless another party is specified in the Agreement Documents) must assume full responsibility therefor, pay all costs in connection therewith and furnish City the required certificates of inspection, testing, or approval. Contractor must also be responsible for and must pay all costs in connection with any inspection or testing required by the Specifications in connection with City's acceptance of a manufacturer, fabricator, supplier or distributor of materials or equipment proposed to be incorporated in the Work, or of materials or equipment submitted for approval prior to Contractor's purchase thereof for incorporation in the Work. The cost of all other inspections, tests and approvals required by the Agreement Documents will be paid by City (unless otherwise specified).

4.4.13.3 All inspections, tests or approvals other than those required by law, ordinance, rule, regulation, code or order of any public body having jurisdiction must be performed by organizations acceptable to City and by the Design Professional if so specified.

4.4.13.4 Neither observations by City, the Design Professional nor inspections, tests or approvals by others will relieve Contractor from their obligations to perform the Work in accordance with the Agreement Documents.

Docusign Envelope ID: E6C32D3C-1F2C-430A-AE31-0184A77678E5

4.4.14 Uncovering Work. If any Work that is to be observed, inspected, tested or approved is covered without written concurrence of City, it must, if requested by City be uncovered for observation. Unless Contractor has given City timely notice of Contractor's intention to cover such Work and City has not acted with reasonable promptness in response to such notice, Contractor must furnish all necessary labor, material and bear all the expenses of such uncovering, exposure, observation, inspection and testing and of satisfactory reconstruction, including compensation for additional professional services, and an appropriate deductive Change Order will be issued.

4.4.15 In all cases of interconnection of its Work with existing or other Work, Contractor must verify at the Site all dimensions relating to such existing or other Work. Any errors due to Contractor's failure to so verify all such grades, elevations, locations or dimensions must be promptly rectified by Contractor without any increase in the Agreement Price. Any design errors or omissions noted by Contractor during this review must be reported promptly to City.

4.4.16 Contractor must establish and maintain all construction grades, lines, levels, and benchmarks, and will be responsible for accuracy and protection of same. This Work must be performed or supervised by a licensed civil engineer or surveyor in the State of Arizona.

4.4.17 Contractor must photograph all buried piping of greater than four (4) inches in diameter prior to backfill.

4.4.18 Contractor is responsible for the proper performance of the work of Subcontractors and any acts and omissions in connection with such performance. Nothing in the Agreement Documents is intended or deemed to create any legal or contractual relationship between City and any Subcontractor or Sub-Subcontractor, including but not limited to any third-party beneficiary rights.

4.4.19 Contractor must coordinate the activities of all Subcontractors. Contractor must coordinate performance of the Work with City's Public Works & Utilities Department and other departments or agencies within City. The Design Professional and other contractors or parties involved in the Project. If City performs other work on the Project or at the Site with separate contractors under City's control, Contractor agrees to cooperate and coordinate its activities with those of such separate contractors so that the Project can be completed in an orderly and coordinated manner without unreasonable disruption.

4.4.20 Contractor will not substitute or change any Subcontractor or Supplier without the prior written approval of City. Any substitute or replacement Subcontractor or Supplier must be required to meet the same qualifications and selection criteria and process as the original Subcontractor or Supplier. If a Subcontract/Supplier selection plan has been approved by City, Contractor will follow that plan unless otherwise approved by City in writing.

4.4.21 Contractor must not change or replace any members of its Project team, including Contractor's Representative, Project Manager, or Superintendent, without an explanation for the change being given to City, and receiving prior written approval of the change from City, which approval will not be unreasonably withheld.

4.4.22 Subcontractors whose scope of work has a value greater than 15% of the total Agreement Price are required to furnish performance and payment bonds to Contractor, unless

Docusign Envelope ID: E6C32D3C-1F2C-430A-AE31-0184A77678E5

otherwise approved in writing by City.

4.4.23 Contractor must comply with MAG Specification § 108.2 (E) unless otherwise specified in Agreement Documents.

4.5 **CONTROL OF THE PROJECT SITE**

4.5.1 Throughout all phases of construction, including suspension of Work, Contractor must keep the Site reasonably free from debris, trash and construction wastes to permit Contractor to perform its construction services efficiently, safely and without interfering with the use of adjacent land areas. Prior to Final Acceptance of the Work, or a portion of the Work, Contractor must remove all debris, trash, construction wastes, materials, equipment, machinery and tools arising from the Work or applicable portions thereof to permit City to occupy the Project or a portion of the Project for its intended use.

4.5.2 Contractor must take whatever steps, procedures or means necessary to prevent dust nuisance due to construction operations. The dust control measures must be maintained at all times to the satisfaction of City and in accordance with the requirements of the Maricopa County Bureau of Air Pollution Control Rules and Regulations.

4.5.3 Contractor must maintain Americans with Disabilities Act (ADA) and American National Standards Institute (ANSI) accessibility requirements during construction activities, including without limitation compliance with the 2010 regulations governing implementation of the ADA to the extent applicable. ADA and ANSI accessibility requirements must include, but not be limited to, parking, building access, areas of refuge, and emergency exit paths of travel. Contractor is responsible for the coordination of all Work to minimize disruption to residents and the public.

4.5.4 Only materials and equipment used directly in the Work will be brought to and stored on the Site by Contractor. When equipment is no longer required for Work, it must be removed promptly from the Site. Protection of construction materials and equipment stored at the Site from weather, theft, damage and all other adversity is solely the responsibility of the Contractor.

4.5.5 Contractor agrees all persons working on the Site must act at all times in the best interest of the Project and will comply with all applicable rules and regulations reasonably set forth by City related to the Site. Notwithstanding the foregoing or anything in this Agreement to the contrary, City may remove from the Site any individual who City deems in their reasonable discretion to be creating a disturbance or causing any problem on the Site.

4.5.6 Contractor will be responsible to City for the acts and omissions of Contractor's employees, Subcontractors and their agents and employees, and any other person performing any of the Work under an Agreement with Contractor, or claiming by, through or under Contractor, for all damages, losses, costs and expenses resulting from such acts or omissions.

4.5.7 City may conduct criminal, drive history, and all other requested background checks of Contractor and Subcontractor personnel performing Work or who have access to City's information, data, or facilities in accordance with City's current background check policies, or the provisions of the Project Specific Conditions. Any officer, employee or agent that fails to background check must be replaced immediately.

4.5.8 City will have a final authority, based upon security reasons: (i) to determine when

Docusign Envelope ID: E6C32D3C-1F2C-430A-AE31-0184A77678E5

security clearance of Contractor's and Subcontractor's personnel is required; (ii) to determine the nature of the security clearance, up to and including fingerprinting personnel; and (iii) to determine whether or not any individual or entity may provide Services or perform Work under the Agreement.

4.5.9 If City objects to any personnel for any reasonable cause, then Contractor must, upon notice from City, remove such individual from the Project.

4.6 **PROJECT SAFETY**

4.6.1 The Project and all Work performed in relation thereto is governed by applicable provisions of the federal laws, including but not limited to, the latest amendments of the following:

a. Williams-Steiger Occupational Safety & Health Act of 1970, Public Law, 91-596.

b. Part 1910 and Part 1926 – Occupational Safety and Health Standards, Chapter XVII of Title 29, Code of Federal Regulations.

c. Part 1518 – Safety and Health Regulations for Construction, Chapter XIII of Title 29, Code of Federal Regulations.

4.6.2 Contractor is responsible for safety of the job Site for employees of Contractor as well as for members of the general public and others who may drive or walk through or be at the Site.

4.6.3 Contractor recognizes the importance of performing the Work in a safe manner so as to prevent damage, injury or loss to: (i) all individuals at the Site, whether working or visiting; (ii) the Work, including materials and equipment incorporated into the Work and stored On-Site or Off-Site; and (iii) all other property at the Site or adjacent thereto, including trees, shrubs, lawns, walks, pavements, roadways, structures and utilities not designated for removal, relocation or replacement in the course of construction; and (iv) the owners or tenants of adjacent property and their patrons, employees and invitees.

4.6.4 Contractor assumes responsibility for implementing and monitoring all safety precautions and programs related to the performance of the Work.

4.6.5 Contractor must provide a "competent person' as required by O.S.H.A regulations. The "competent person" must be identified at the Pre-Construction Conference with City advised in writing of any changes.

4.6.6 The "competent person" must make routine daily inspections of the Site and must hold weekly safety meetings with Contractor's personnel, Subcontractors and others as applicable.

4.6.7 Contractor and Subcontractors must comply with all legal and regulatory requirements relating to safety, as well as any City specific safety requirements set forth in the Agreement Documents, provided that such City-specific requirements do not violate any applicable legal and regulatory requirements.

4.6.8 Contractor will immediately report in writing any safety-related injury, loss, damage or accident arising from the Work to Project Manager and, to the extent mandated by Legal Requirements, to all government or quasi-government authorities having jurisdiction over safety-related matters involving the Project or the Work.

Docusign Envelope ID: E6C32D3C-1F2C-430A-AE31-0184A77678E5

4.6.9 Contractor's responsibility for safety under this Section is not intended in any way to relieve Subcontractors and Sub-Subcontractors of their own contractual and legal obligations and responsibility for (i) complying with all Legal Requirements, including those related to health and safety matters, and (ii) taking all necessary measures to implement and monitor all safety precautions and programs to guard against injury, losses, damages or accidents resulting from their performance of the Work.

4.6.10 As between City and Contractor, Contractor is responsible to City for any and all the safety issues relating to the Work on the Project. Contractor must administer and manage the safety program. This will include, but not necessarily be limited to review of the safety programs of each Subcontractor. Contractor must monitor the establishment and execution of compliance with all applicable regulatory and advisory agency construction safety standards. Contractor's responsibility for review, monitoring, and coordination of the Subcontractor's safety programs will not extend to direct control over execution of the Subcontractors' safety programs. Notwithstanding Contractor's safety obligations to City, it is agreed and understood that each individual Subcontractor will remain controlling employer responsible for the safety programs and precautions applicable to its own work and the activities of other's work in areas designated to be controlled by such Subcontractor for purposes of workers compensation insurance coverage.

4.6.11 Nothing in this agreement will relieve Contractor of his responsibility to maintain traffic, structures, etc., as noted on the Plans, Specifications, and Project Specific Conditions. Contractor is responsible to provide all necessary shoring, bracing and trench support as is necessary to maintain traffic structures, etc., as stipulated in the Plans, Specifications, and Special Provisions. If the stability of adjoining building, walls, roadways, etc., is endangered by Contractor's excavation, shoring, bracing, or under pinning must be provided as necessary to ensure project safety. Cost for shoring, bracing, underpinnings, and trench support will be included in the appropriate items listed in the Agreement Price, and no additional payment will be made for this work.

4.7 MATERIALS QUALITY, SUBSTITUTIONS, AND SHOP DRAWINGS

4.7.1 Quality Control and Quality Assurance Testing.

4.7.1.1 All construction materials to be used or incorporated in the Project are subject to inspection, Quality Control & Quality Assurance Testing, and approval or rejection by City. Any material rejected by City must be removed immediately and replaced in an acceptable manner to City at no additional cost to City. When QC/QA tests indicate noncompliance with the Agreement Documents, retesting must be performed by the same testing laboratory that performed the tests that indicated noncompliance.

4.7.1.2 The Contractor must establish, provide, and maintain an effective Quality Control Testing Program (QCTP). The Contractor must develop his own program or procure the services of a consultant. In either case, the party performing the tests must be currently certified by the National Bureau of Standards in the National Voluntary Laboratory Accreditation Program (NVLAP) for construction services or the AASHTO Accreditation Plan (AAP) for Soils, Asphalt and Concrete. The Contractor must provide all support necessary to perform QC and QA testing and sampling (i.e. shoring for testing trench backfill, backhoes, motor graders, loaders, etc. to facilitate testing and sampling). The City will perform the QA testing.

4.7.1.3 The Contractor must submit a written QCTP to the City as a required submittal. The Contractor must not begin Work until the Quality Control Program has been reviewed and

Docusign Envelope ID: E6C32D3C-1F2C-430A-AE31-0184A77678E5

accepted by the City. Resumes of all personnel that will be associated directly or indirectly with the QCTP must be included.

4.7.1.4 The QCTP must include, but not be limited to, on-site/field and laboratory testing of all material delivered to the Site and any existing materials or conditions pertinent to the project.

4.7.1.5 All testing must be under the direction of a Professional Engineer registered in the State of Arizona, knowledgeable in Materials Testing. All "Test Report" forms must be stamped by said Engineer.

4.7.1.6 The written QCTP will set forth the responsibilities of the engineer, project manager, supervisory personnel and each technician assigned to this project. Substitutions or replacement of personnel must require prior written approval by the City. All personnel must be proficient within their assigned duties and possess certification(s) commensurate with their position and responsibilities. The minimum certification(s) for each technician must be NICET Level II, Arizona Technical Testing Institute, American Concrete Institute, or other nationally recognized program applicable to the project and approved by the City of Chandler. The written QCTP must include a description of the required field and construction materials laboratory tests, including required frequencies that meet the minimums established herein.

4.7.1.7 The Contractor must establish a system to record and report all material test results. The daily test reports must include, but not be limited to:

a. Test designation;
b. Date of test;
c. Name of tester;
d. Location of test/sample (station and offset);
e. Product suppliers and product codes (as applicable);
f. Depth/elevation of test/sample;
g. Test result;
h. Control requirement(s);
i. Cause of rejection (if applicable);
j. Results of retests (if applicable); and
k. Remedial action (if applicable).

4.7.1.8 The Contractor must submit test results to the designated City representative.

4.7.1.9 The Contractor must also submit a weekly report to the City summarizing the testing and construction activities completed by emailing the report to the email addresses noted above. All weekly reports must be submitted simultaneously to the Contractor and the City of Chandler. The report must include individual summary sheets for each utility line, structure, and portion of the pavement section. Cores must be numbered sequentially throughout the Project. Re-cores must reference the original core by number and must contain the averaged values for thickness and density. Total pavement thickness must be reported. Vertical location of tests for underground utilities must indicate the depth of the

Docusign Envelope ID: E6C32D3C-1F2C-430A-AE31-0184A77678E5

excavation at the location of the test (i.e., cut to flow line [if applicable], depth to bottom or top of pipe, etc.). Density tests must be numbered sequentially. If the minimum number of tests has not been performed per the written QCTP, this must be stated in the weekly summary report with an explanation of the circumstances.

4.7.1.10 The City will maintain a copy of the Project test results and weekly reports in the Project file. In cases where quality control activities do not comply with the Agreement provisions, the City may:

a. Order the Contractor to replace ineffective or unqualified quality control personnel.

b. Order the Contractor to stop operations until appropriate corrective action is taken.

4.7.1.11 Although minimum testing requirements are specified herein, the Contractor bears full responsibility for the quality of the materials and their installation and may elect to perform additional testing beyond the requirements set forth herein to ensure compliance.

4.7.1.12 The Quality Control requirements contained in this Section are in addition to and separate from Quality Assurance Testing, which will be performed by the City of Chandler or its representative. If the Quality Assurance test results are not in agreement with the Quality Control test results, the Contractor will have the option to retain a third party consultant for referee tests. The third party consultant must meet the same requirements as the consultant performing the Quality Control Testing. The results of the third party will be binding. All cost incurred by the referee testing will be the Contractor's expense. If the Contractor elects not to retain a third party for referee testing, the City of Chandler test results will prevail.

4.7.1.13 Except as otherwise noted within this Section, Work or materials required by this Section are non- pay items. Per MAG Section 101, a non-pay item is an item of Work for which no separate payment will be made, the cost of which is to be included as an incidental cost for associated item(s) included on the Bid Schedule or Schedule of Values.

4.7.2 <u>Trade Names and Substitutions</u>.

4.7.2.1 Substitutions prior to bid will only be considered if in compliance with Arizona Revised Statute § 34-104.

4.7.2.2 Contractor, if requested by City, must submit Samples or any additional information that may be necessary to evaluate the acceptability of the substitution.

4.7.2.3 City will make the final decision and will notify Contractor in writing as to whether the substitution has been accepted or rejected.

4.7.2.4 If City does not respond within 15 working days, Contractor must continue to perform the Work in accordance with the Agreement Documents and the substitution will be considered rejected.

4.7.3 <u>Shop Drawings</u>.

4.7.3.1 Contractor must prepare and submit Shop Drawings which show details of all Work to insure proper installation of the Work using those materials and equipment specified under the approved Plans and Specifications.

Docusign Envelope ID: E6C32D3C-1F2C-430A-AE31-0184A77678E5

4.7.3.2 Contractor must submit a schedule of Shop Drawing submissions, which avoids bulk submissions to the extent reasonably possible, with the Project Schedule for City approval. The schedule of Shop Drawing submissions must include all of the items for which Shop Drawings are required by the Agreement Documents, including the Specifications. Unless otherwise noted, Shop Drawings will not be required for items specified or detailed in the Uniform Standard Specifications and Details or the Technical Specifications.

4.7.3.3 Shop Drawings must be numbered consecutively for each Specification section and must accurately and distinctly present the following:

a. All working and erection dimensions.

b. Arrangements and sectional views.

c. Necessary details, including complete information for making connections between work under this Agreement and work under other Agreements.

d. Kinds of materials and finishes.

e. Parts list and description thereof.

4.7.3.4 Each Drawing or page must include:

a. Project Name, City of Chandler Project Number and descriptions.

b. Submittal date and space for revision dates.

c. Identification of equipment, product or material.

d. Name of Contractor and Subcontractor.

e. Name of Supplier and Manufacturer.

f. Relation to adjacent structure of material.

g. Physical dimensions clearly identified.

h. ASTM and Federal Specifications references.

i. Identification of and justification for deviations from the Agreement Documents.

j. Contractor's stamp, initialed or signed, dated and certifying the review of submittal, certification of field measurements and compliance with Agreement.

k. Location at which the equipment or materials are to be installed.

4.7.3.5 Location will mean both physical location and location relative to other connected or attached material. City will return unchecked any submittal, which does not contain complete data on the Work and full information on related matters.

4.7.3.6 Stock or standard drawings will not be accepted for review unless full identification and supplementary information is shown thereon in ink or typewritten form.

4.7.3.7 Contractor must schedule, prepare and submit all Shop Drawings in accordance with a time-table that will allow its suppliers and manufacturers sufficient time to fabricate, manufacture, inspect, test and deliver their respective products to the project Site in a timely manner so as to not delay the complete performance of the Work.

Docusign Envelope ID: E6C32D3C-1F2C-430A-AE31-0184A77678E5

4.7.3.8 If the Shop Drawings show departures from the Agreement requirements, Contractor must make specific mention thereof in the Letter of Transmittal; otherwise review of such submittals by City will not constitute review of the departure. Review of the Drawings will constitute review of the specific subject matter for which the Drawings were submitted and not of any other structure, material, equipment, or apparatus shown on the Drawings.

4.7.3.9 The review of Shop Drawings will be general and will not relieve Contractor of responsibility for the accuracy of such Drawings, nor for the proper fitting and construction of the Work, nor for the furnishing of materials or Work required by the Agreement. No construction called for by Shop Drawings will be initiated until such Drawings have been reviewed and approved by City.

4.7.3.10 The procedure in seeking review of the Shop Drawings will be as follows:

a. Contractor must submit complete sets of Shop Drawings and other descriptive data as specified in this Section.

b. After Contractor's submittal or resubmittal of Shop Drawings, if Contractor has submitted Shop Drawings in accordance with the City-approved submittal schedule, or upon resubmission, City will be provided with three (3) calendar weeks for review. Should City require additional review time above and beyond the three (3) calendar weeks, Contractor may ask for a time extension or monetary compensation, if they can present valid, factual evidence that actual damages were incurred by Contractor. City will determine the amount of the time extension or the monetary compensation to be awarded Contractor, if any, in accordance with City's Policy Statement for Calculating Delays and Damages, Appendix 1.

4.7.3.11 Contractor will be responsible for all extra costs incurred by City caused by Contractor's failure to comply with the procedure outline above.

4.7.4 Long Lead Time Items. Contractor must submit Shop Drawings, as required by the Engineer, on all long lead items to be furnished and installed as part of the project within 10 Days after the date of the executed Agreement letter issued by City. In addition, Contractor must order all long lead items to be furnished and installed as part of this Project within 3 Days after receiving approved Shop Drawings. For all long lead times for which Shop Drawings are not required, Contractor must order said long lead items within 15 Days after the date of the executed Agreement letter issued by City. Within 2 Days after ordering long lead items, Contractor must supply copies of all purchase orders, along with an accurate delivery schedule from the supplier.

4.7.5 Construction Water. If Contractor uses water from City's water system for construction water, Contractor must obtain a fire hydrant meter from City of Chandler Utility Services (480-782-2280) and all construction water must be obtained through the hydrant meter. Contractor must pay all fees related to the hydrant meter and all water bills for construction water. All cost for meters and construction water will be included in the Agreement Price.

4.8 PROJECT RECORD DOCUMENTS

4.8.1 During the construction period, Contractor must maintain at the jobsite a full-size set of prints of the Construction Document Drawings and Shop Drawings for Project Record Document purposes.

Docusign Envelope ID: E6C32D3C-1F2C-430A-AE31-0184A77678E5

4.8.2 Contractor must mark these Drawings to indicate the actual installation where the installation varies from the original Construction Documents. Contractor must give particular attention to information on elements that will be concealed, which would be difficult to identify or measure and record later. Items required to be marked include but are not limited to:

a. Dimensional changes to the Drawings.

b. Revisions to details shown on Drawings.

c. Locations and depths of underground utilities.

d. Revisions to routing of piping and conduits.

e. Actual equipment locations.

f. Changes made by Change Order or Addendum.

g. Details not on original Agreement Drawings.

4.8.3 Contractor must mark completely and accurately Project Record Drawing sets of Construction Documents.

4.8.4 Contractor must mark Project Record Drawings sets with red erasable colored pencil.

4.8.5 Contractor must note Request for Information (RFI) Numbers and Change Order numbers, etc., as required to identify the source of the change to the Construction Documents.

4.8.6 Contractor must submit Project Record Drawing sets and Shop Drawings to City or its representative for review and comment.

4.8.7 Upon receipt of the reviewed Project Record Drawings from City, Contractor must correct any deficiencies and omissions to the Drawings and submit the final original of the Project Record Drawings to City prior to Final Payment.

4.8.8 Project Manager will review the Project Record Drawings monthly prior to the date established for the Payment Request and will be the sole judge of acceptance of these Drawings.

4.9 WARRANTY AND CORRECTION OF DEFECTIVE WORK

4.9.1 Contractor warrants to City that the construction, including all materials and equipment furnished as part of the Work, will be new unless otherwise specified in the Agreement Documents, of good quality, and free of defects in materials and workmanship. Contractor's warranty obligation excludes defects caused by abuse, alterations, or unreasonable failure to maintain the construction by persons other than Contractor, subcontractors, or others under Contractor's control. Nothing in this warranty will limit any manufacturer's warranty which provides City with greater warranty rights than set forth herein or in the Agreement. Contractor will provide City with all manufacturers' warranties and operation and maintenance manuals upon substantial completion of the Work. Contractor's warranty must be for one (1) year, in accordance with MAG Specification § 108.8, and will commence for all portions of the Work upon Final Acceptance of the entire Work as determined by City under the Agreement. All statutory or other warranties, express or implied, related to latent defects will remain in force and are not limited by this provision.

4.9.2 City May Stop the Work. If the Work is defective, or Contractor fails to supply sufficient skilled workmen or suitable materials or equipment, City may order Contractor to stop the

Docusign Envelope ID: E6C32D3C-1F2C-430A-AE31-0184A77678E5

Work without cost to City, or any portion thereof, until the cause for such order has been eliminated; however, this right of City to stop the Work will not give rise to any duty on the part of City to exercise this right for the benefit of Contractor or any other party.

4.9.3 Correction or Removal of Defective Work.

4.9.3.1 If required by City, Contractor must promptly, without cost to City and as specified by City, either correct any defective Work, whether or not fabricated, installed or completed, or, if the Work has been rejected by City, remove it from the Site and replace it with non-defective Work. Contractor must correct any Work which may be displaced in correcting, removing or replacing defective Work. No compensation will be allowed Contractor for such removal, replacement or remedial Work. Contractor must reimburse City for costs incurred by City due to such correction or removal including but not limited to additional expenses for inspection, testing or observation and for repeated reviews by the City or Design Professional.

4.9.3.2 Upon failure on the part of the Contractor to comply within a reasonably prompt time with any written order of City to correct or remove defective Work, City has authority to cause nonconforming materials or rejected Work to be remedied, removed, or replaced at the Contractor's expense and to deduct the costs from any moneys due or to become due the Contractor.

4.9.4 City May Correct Defective Work. If Contractor fails within a reasonable time after written notice of City to proceed to correct defective Work or to remove and replace rejected Work as required by City or if Contractor fails to perform the Work in accordance with the Agreement Documents (including any requirements of the progress schedule), City may, after 7 Days' written notice to Contractor, correct and remedy any such deficiency. To the extent necessary to complete corrective and remedial action, City may exclude Contractor from all or part of the Work, and suspend Contractor's services related thereto, take possession of Contractor's tools, appliances, construction equipment and machinery at the Site and incorporate in the Work all materials and equipment stored at the Site or for which City has paid Contractor, but which are stored elsewhere. Contractor must allow City, city representatives, agents and employees such access to the Site as may be necessary to enable City to exercise City’s rights under this Section. All direct and indirect costs of City in exercising such rights will be charged against Contractor in an amount verified by City representative, and a Change Order will be issued incorporating the necessary revisions in the Agreement Documents and a reduction in the Agreement Price. Such direct and indirect costs will include, in particular but without limitation, compensation for additional professional services required and all costs of repair and replacement of Work or others destroyed or damaged by correction, removal or replacement of Contractor's defective Work. Contractor will not be allowed an extension of the Agreement Time because of any delay in Contractor’s performance of the Work attributable to the exercise by City or City's rights hereunder.

4.9.5 Correction or Removal of Unauthorized Work.

4.9.5.1 Any Work done beyond the lines and grades shown on the Drawings or established by the Design Professional or any changes in, additions to, or deductions from the Work done without written authority will be considered as unauthorized and will not be paid for. Work so done may be ordered remedied, removed, or replaced at the Contractor's expense.

4.9.5.2 Upon failure on the part of the Contractor to comply promptly with any order of the City,

Docusign Envelope ID: E6C32D3C-1F2C-430A-AE31-0184A77678E5

City will have authority to cause unauthorized Work to be remedied, removed, or replaced at the Contractor's expense and to deduct the costs from any moneys due or to become due the Contractor.

4.9.6 Correction Period - One Year Guarantee.

4.9.6.1 If, within one year after the date of Final Acceptance, or such longer period of time as may be prescribed by law or by the terms of any applicable special guarantee required by the Agreement Documents, or by any specific provision of the Agreement Documents, any Work is found to be defective, Contractor must promptly, without cost to City and in accordance with City's written instructions, either correct such defective Work, or, if it has been rejected by City, remove it from the Site and replace it with non-defective Work. If Contractor does not promptly comply with the terms of such instructions, or in an emergency where delay would cause serious risk of loss or damage, City may have the defective Work corrected or the rejected Work removed and replaced, and all direct and indirect costs of such removal and replacement, including compensation for additional professional services, must be paid by Contractor. Such action by the City will not relieve the Contractor of the guarantees required by this Section or elsewhere in the Agreement Documents.

4.9.6.2 If, in the opinion of the City, defective Work creates a dangerous condition or requires immediate correction or attention to prevent further loss to the City or to prevent interruption of operation of the City, the City will attempt to give the notice required by this Section. If the Contractor cannot be contacted or does not comply with the City's request for correction within a reasonable time as determined by the City, the City may, notwithstanding the provisions of this Section, proceed to make such correction or provide such attention; and the costs of such correction or attention will be charged against the Contractor. Such action by the City will not relieve the Contractor of the guarantees required by this Section or elsewhere in the Agreement Documents.

4.9.6.3 This Section does not in any way limit the guarantee on any items for which a longer guarantee is specified or on any items for which a manufacturer or supplier gives a guarantee for a longer period. The Contractor agrees to act as co-guarantor with such manufacturer or supplier and must furnish the City all appropriate guarantee or warranty certificates upon completion of the Project. No guarantee period, whether provided for in this Section or elsewhere, will in any way limit the liability of Contractor or their sureties or insurers under the indemnity or insurance provisions of these General Conditions and the Project Specific Special Conditions.

4.9.7 Acceptance of Defective Work.

4.9.7.1 If, instead of requiring correction or removal and replacement of defective Work, City may accept Work when in the best interest of the City to do so with appropriate monetary credit from Contractor. If any such acceptance occurs prior to final payment, a Change Order will be issued incorporating the necessary revisions in the Agreement Documents, including appropriate reduction in the Agreement Price; or, if the acceptance occurs after final payment, an appropriate amount must be paid by Contractor to City.

4.9.7.2 Alternatively, City may require Contractor to furnish at Contractor's expense, a special performance guarantee or other surety prior to acceptance of defective work.

4.9.8 The Warranty period begins on the Final Acceptance date noted in the Certificate of Completion, irrespective of early completion by some Subcontractors of their work.

Docusign Envelope ID: E6C32D3C-1F2C-430A-AE31-0184A77678E5

4.9.9 Contractor's warranty obligation must be in accordance with MAG Specifications.

4.9.10 Nothing in the warranties contained in the Agreement Documents are intended to limit any manufacturer's warranty which provides City with greater warranty rights than set forth in this Section or the Agreement Documents. Contractor must provide City with all manufacturers' warranties prior to Substantial Completion, if applicable, or Final Acceptance.

4.9.11 Contractor agrees that it will be responsible to manage and administer the correction of any Work that is not in conformance with the Agreement Documents during the warranty periods set forth in this Section, or during any longer periods to the extent required by the Agreement Documents. A progress payment, or partial or entire use or occupancy of the Project by City, will not constitute acceptance of Work not in accordance with the Agreement Documents.

4.9.12 When notified of a warranty issue, Contractor must respond in writing within 48-hours and must perform warranty Work as soon as material for said repairs are available (as judged solely by City), and in any event Contractor must, take immediate steps to commence and complete correction of nonconforming Work no later than the time period set forth in City's written notification in accordance with the Agreement Documents. This includes the correction, removal or replacement of the nonconforming Work and any damage caused to other parts of the Work affected by the nonconforming Work. If defects develop which are determined by City to be an emergency, City will notify Contractor, via the most expeditious means regarding the nature and condition of the defects. In turn, Contractor must immediately dispatch necessary forces to correct the defect or the emergency condition in accordance with Agreement Documents.

4.9.13 The time periods referenced in this Section apply only to Contractor's obligation to correct nonconforming Work and is not intended to constitute a period of limitations for any other rights or remedies that City may have regarding Contractor's other obligations under the Agreement Documents.

4.9.14 Without limiting the foregoing or anything in these General Conditions or the Agreement to the contrary, Contractor must obtain and provide to City all warranties for any portion of the Project offered by the manufacturer, installer or provider thereof. City and the user of the facility will have the right to the full value and benefit of all such warranties. Contractor must ensure all such warranties are fully transferrable to facilitate the full value of this Section.

4.9.15 Contractor's warranty excludes damages or defects caused by abuse, alterations to the Work not executed by or through Contractor, improper or insufficient maintenance, improper operation, or normal wear and tear and normal usage.

4.9.16 In the event of any noncompliance with this entire Section 4, City may require Contractor to stop or suspend the Work in whole or in part.

SECTION 5 - CITY RESPONSIBILITIES

5.1 CITY PROJECT MANAGER AND INSPECTORS

5.1.1 Project Manager is responsible for providing City-supplied information and approvals in a timely manner to assist Contractor to fulfill its obligations under the Agreement Documents.

Docusign Envelope ID: E6C32D3C-1F2C-430A-AE31-0184A77678E5

5.1.2 Project Manager will also provide Contractor with prompt notice when it observes any failure on the part of Contractor to fulfill its contractual obligations, including any default or defect in the Project or non-conformance with the Drawings and Specifications.

5.1.3 City may utilize Field Inspectors to assist Project Manager during construction in observing performance of Contractor. City's use of Inspectors is for the purpose of assisting Project Manager.

5.1.4 The Inspectors are authorized to inspect all Work and materials furnished. Such inspections may extend to all or part of the Work and to preparation, fabrication or manufacture of the materials to be used. The Inspectors have the authority to issue instructions contrary to the Construction Documents if approved and coordinated with the directions of Project Manager.

5.1.5 The Inspectors have the authority to reject work or materials until any questions at issue can be decided by Project Manager.

5.1.6 The use of Inspectors by City will not make City responsible for or give City control over construction means, methods, techniques, sequences or procedures or for safety precautions or programs or responsibility for Contractor's failure to perform the Work in accordance with Agreement Documents. The Inspectors are not authorized to direct any of Contractor's activities, employees or Subcontractors.

5.2 **DESIGN PROFESSIONAL SERVICES**

City may contract separately with one or more Design Professionals to provide construction administration of the Project. The Design Professional's Agreement, as well as other firms hired by City may be furnished to Contractor. Contractor does not have the right to limit or restrict or reject any Agreement modifications that are mutually acceptable to City and Design Professional.

5.3 **CITY'S SEPARATE CONTRACTORS**

City is responsible for all work performed on the Project or at the Site by separate contractors retained by City. City will contractually require its separate contractors to reasonably cooperate with, and reasonably coordinate their activities so as not to interfere with Contractor in order to enable Contractor to timely complete the Work consistent with the Agreement Documents. Contractor must immediately notify the Project manager, and address the matter in the next monthly status report, if any activities of such separate contractors are expected to interfere, or are interfering, with Contractor and such interference will or could result in any delay in Contractor's performance of the Work.

5.4 **PERMIT REVIEW AND INSPECTIONS**

5.4.1 If requested by Contractor, Project Manager will provide assistance and guidance in obtaining necessary reviews, permits and inspections.

5.4.2 The regulating agencies of City, such as Development and Sustainability, Fire and Planning Departments, enforce legal requirements. The enforcement activities of City are independent and separate from this Agreement.

5.5 **PLANS AND SPECIFICATIONS TO THE CONTRACTOR**.

Contractor will be provided up to five copies of the Agreement Documents as are reasonably necessary for the execution of the Work. Additional copies will be furnished,

Docusign Envelope ID: E6C32D3C-1F2C-430A-AE31-0184A77678E5

upon request, at the cost of reproduction.

SECTION 6 - AGREEMENT TIME

6.1 AGREEMENT TIME

6.1.1 The Agreement Time will start with the Notice to Proceed ("NTP") and end with Final Acceptance.

6.1.2 Beginning on the date of the NTP, Contractor must begin to fulfill Contractor's obligations under the Agreement. Contractor's obligations include providing City and other agencies with any submittals required by the Project Specific Special Provisions, including but not limited to, an approved Project Schedule, Traffic Control Plans, and a Stormwater Pollution Prevention Plan. Contractor must submit all such required submittals before any physical construction work commences on the Site. NTP does not authorize construction work until all agreement insurance, bonds, and schedules are submitted to and accepted by the City.

6.1.3 The Agreement Time will be as set forth in the Project Schedule. Contractor agrees that it will commence performance of the Work and complete the Project through both Substantial Completion and Final Acceptance within the Agreement Time.

6.1.4 Time is of the essence of this Agreement, for the Project, for the Work, and for each phase and designated Milestone thereof.

6.1.5 Failure of Contractor to perform any covenant or condition contained in the Agreement Documents within the time periods specified herein, will constitute a material breach of this Agreement entitling City to terminate the Agreement unless Contractor applies for and receives an extension of time, in accordance with the procedures set forth in the Agreement Documents.

6.1.6 Failure of City to insist upon the performance of any covenant or condition within the time periods specified herein, will not constitute a waiver of Contractor's duty to perform every other covenant or condition within the designated periods, unless a specific waiver is granted in writing for each such covenant or condition.

6.1.7 City's agreement to waive a specific time provision or to extend the time for performance will not constitute a waiver of any other time provisions contained in the Agreement Documents. Failure of Contractor to complete performance promptly within the additional time authorized in the waiver or extension of time agreement constitutes a material breach of this Agreement entitling City to all the remedies set forth herein or provided by law.

6.2 PROJECT SCHEDULE

6.2.1 The Project Schedule must be in Microsoft Project standard file format, must be updated and maintained throughout the Agreement Time, and must contain the following:

6.2.1.1 Detailed representation of all activities for the project, both on-site construction and major procurement. All significant activities together with the resource loading requirements for each and all items appearing on the schedule of values or bid schedule for progress payments must be shown on the Project Schedule or in attached transmittal letter as described in Section 6.2.8.

Docusign Envelope ID: E6C32D3C-1F2C-430A-AE31-0184A77678E5

6.2.1.2 Dependencies between activities must be indicated so that it may establish as to the effect the progress of any one activity would have on other activities and on the Schedule.

6.2.1.3 Activities for submission, review, and approval of all required submittals.

6.2.1.4 An amount of time will be established prior to the final completion date for "punch list and cleanup". No other activities will be scheduled during this period. Punch list and cleanup must be shown on the Project Schedule and must be entirely completed prior to the expiration of the Agreement Time.

6.2.2 Within 10 Days of receipt of City's comments, Contractor must make all required corrections, adjustments, and additions to complete the Project Schedule and resubmit to City for review. City's review of and response to the Project Schedule is for the purpose of: (1) City planning and staffing for the Project as may be required from time to time; (2) ensuring Contractor's general conformance with the scheduling requirements of the Agreement Documents and completion of the Project within the Agreement Time; and (3) monitoring and evaluating the construction status for purposes of approving monthly progress payments. Acceptance of a submitted schedule by City should in no way be construed as an affirmation or admission that the schedule is reasonable or workable by Contractor. The responsibility for completing the Work on the Project within the Agreement Time remains the obligation of Contractor. City's review does not relieve Contractor from compliance with the requirements of the Agreement Documents or be construed as relieving Contractor of its complete and exclusive control over the means, methods, sequences and techniques for executing the work.

6.2.3 The Project Schedule must show milestones, including milestones for City-furnished information, and must include activities for City-furnished material and construction by other contractors when those activities are interrelated with Contractor activities.

6.2.4 The Project Schedule must be revised as required by conditions and progress of the Work, but such revisions do not relieve Contractor of its obligations to complete the Work within the Agreement Time, as adjusted in accordance with the Agreement Documents. No modification to the Agreement Documents or the Agreement Time will be effective unless approved in advance by City.

6.2.5 For all items of materials and equipment that are critical or may require long lead times to acquire, the Project Schedule must show dates for submission, review and approval of submittals, ordering, and delivery.

6.2.6 An updated Project Schedule must be submitted monthly to City as part of the Payment Request. The monthly submittal must include one full size plot of the entire schedule and one electronic copy containing the schedule in Microsoft Project standard file format. In addition, Contractor must, upon request by City, provide a copy of all submitted schedule data in electronic format which must be clearly labeled with the Project description, scheduling program name and version number, and schedule print/data date.

6.2.7 Contractor must provide City with a monthly status report with each Project Schedule detailing the progress of the Work, including: (i) if the Work is proceeding according to schedule, (ii) any discrepancies, conflicts, or ambiguities found to exist in the Agreement Documents that require resolution, and (iii) other information detailing items that require resolution so as not to jeopardize the ability to complete the Work in the Agreement Time.

Docusign Envelope ID: E6C32D3C-1F2C-430A-AE31-0184A77678E5

6.2.8 With each Project Schedule submittal, Contractor must include a transmittal letter including the following:

a. Description of problem tasks, referenced to field instructions or requests for information (RFI's), as appropriate.

b. Current and anticipated delays including:

(i) Cause of the delay.

(ii) Corrective action and schedule adjustments to correct the delay.

(iii) Known or potential impacts and their delay on other activities, milestones, and their impact on the Substantial Completion and Final Acceptance dates.

(iv) Changes in construction sequence.

c. Pending items and status thereof including but not limited to:

(i) Time Extension requests;

(ii) Substantial Completion date status;

(iii) Final Acceptance date status.

d. If ahead of schedule, the number of calendar Days ahead.

e. If behind schedule, the number of calendar Days behind.

f. Other Project or scheduling concerns.

6.2.9 Critical Path Method (CPM).

6.2.9.1 Unless otherwise specified in the Agreement, the Project Schedule must include a Critical Path Method (CPM) diagram schedule showing the sequence of activities, the interdependence of each activity and identifies the Critical Path.

6.2.9.2 The CPM diagram schedule must be in calendar Days and indicate duration, earliest and latest start and finish dates for all activities, and total Float Times for all activities except critical activities. The CPM diagram must be presented in a time scaled graphical format for the Project as a whole.

6.2.9.3 The CPM diagram schedule must indicate all relationships between activities.

6.2.9.4 The activities making the Project Schedule must contain sufficient detail to assure that adequate planning has been done for proper execution of the Work and such that it provides an appropriate basis for monitoring and evaluation the progress of the Work. Individual activities must not exceed 30 Days in length, in most cases.

6.2.9.5 The CPM diagram schedule must be based upon activities, which coincide with the Schedule of Values.

6.2.9.6 The CPM diagram schedule must show all submittals associated with each work activity and the review time for each submittal.

6.2.10 Float Time.

6.2.10.1 The total Float Time within the overall schedule is for the exclusive use of City, but City may approve Contractor's use of Float as needed to meet Agreement Milestones and

Docusign Envelope ID: E6C32D3C-1F2C-430A-AE31-0184A77678E5

the Project completion date.

6.2.10.2 Contractor will not be allowed to sequence, hide, or reallocate Float Time through such strategies, as extending activity duration estimates to consume available Float, using preferential logic, or using extensive crew/resource sequencing, tec. No time extensions will be granted nor delay damages paid until a delay occurs which extends the Work beyond the Agreement Time.

6.2.11 City-Caused Delays. City-caused delays on the Project, if any, may be offset by City-caused time savings (i.e., Critical Path submittals returned in less time than allowed by the Agreement, approval of substitution requests and credit changes which result in savings of time to Contractor, etc.) In such an event, Contractor will not be entitled to receive a time extension or delay damages until all City-caused time savings are exceeded and the Agreement Time is also exceeded.

6.2.12 Rain-Related Delays. Contractor is required, in preparing the Project Schedule to take into account all relevant weather conditions, including normal rainfall and distribution. No additional compensation will be given for any rain-related delays or impacts on the Work or the Project Schedule. No time extension will be granted in the Project Schedule unless the rainfall during the construction of Work is unusually severe, was not reasonably anticipated, and the total rainfall was significantly in excess of the normal rainfall for the Project Site location. Normal rainfall for the Project will be determined from the 10-year average rainfall for the Site as measured by the National Oceanic and Atmospheric Administration or comparable source of reliable information for rainfall in Chandler, Arizona. In addition, the excessive rainfall must have actually impacted Work activities on the Critical Path and caused delay beyond any remaining Float at the time of the rain- caused delay. The burden of documenting normal rainfall, the excessive rainfall and the impact on Critical Path activities is on Contractor. All other provisions in the Agreement Documents relating to claims, including without limitation notice requirements, apply to any claim by Contractor for a rain delay.

6.2.13 City's "Policy Statement for Calculating Delays and Damages," Appendix 1 to these General Conditions, will apply to all claims of delay and delay damages.

6.2.14 Force Majeure. If Contractor is delayed or prevented from the performance of any Work required under this Agreement by reason of acts of God or other causes beyond the control and without fault of Contractor (financial inability excepted), performance of that Work will be excused, but only for the period of the delay. The time for performance of the Work will be extended for a period equivalent to the period of delay. In addition, the parties agree if Contractor's delayed or suspended performance directly arises out of or directly results from the COVID-19 pandemic, Contractor's delayed or suspended performance may be excused as set forth in this clause. Provided, however; Contractor must give the City written notice within 30 days of the occurrence of the event giving rise to COVID-19 pandemic related delayed or suspended performance. For COVID-19 pandemic related delay or suspended performance, the parties must agree in writing to the length of the excused delay or suspended performance. Further, Contractor must obtain the City's written approval to use any allowance established as part of the project for delays and costs related to the COVID-19 pandemic.

6.3 SUBSTANTIAL COMPLETION

6.3.1 When Contractor considers that the Work, phase or a portion thereof, which City agrees in

Docusign Envelope ID: E6C32D3C-1F2C-430A-AE31-0184A77678E5

writing to accept separately, is substantially complete, City will prepare and submit to Contractor a comprehensive Punch List of items to be completed or corrected prior to Final Acceptance and Final Payment. Failure to include an item on such Punch List does not alter the responsibility of Contractor to complete all Work in accordance with the Agreement Documents.

6.3.2 Upon receipt of Contractor's Punch List, Project Manager will make an inspection to determine whether the Work or designated portion thereof is substantially complete. Project Manager may, at Project Manager's sole option, be assisted in such inspection by the Design Professional for the Project. If the inspection by the Project Manager discloses any item, whether or not included on Contractor's Punch List, which is not sufficiently completed in accordance with the Agreement Documents so that City can occupy or utilize the Work, phase or designated portion thereof for its intended use, Contractor must, before issuance of the Certificate of Substantial Completion, complete or correct such item upon notification by Project Manager. In such case, Contractor must then submit a request for another inspection by Project Manager to determine Substantial Completion.

6.3.3 Certificate of Substantial Completion.

6.3.3.1 The Project Manager will not issue a Certificate of Substantial Completion unless and until the Work (or separable units or Phases as provided in the Agreement Documents) is essentially and satisfactorily complete in accordance with the Agreement Documents, such that the Project is ready for use by City for its intended purpose, opening to the general public, full occupancy or use by City (including, without limitation, all separate units, or rooms, facilities, access, income-generating areas, and all areas serving the general public, as applicable, must be ready for full-operation without material inconvenience or discomfort), including, to the extent applicable to the Work, the following: all materials, equipment, systems, controls, features, facilities, accessories and similar elements are installed in the proper manner and in operating condition, inspected and approved; surfaces have been painted; masonry and concrete cleaned with any sealer or other finish applied; utilities and systems connected and functioning; site work complete; permanent heating, ventilation, air condition, vertical transportation and other systems properly operating with proper controls; lighting and electrical systems installed, operable and controlled; paving completed, signage installed, and other Work as applicable, has been performed to a similar state of essential and satisfactory completion. A minor amount of Work, as determined by and at the discretion of the Project Manager, such as installation of minor accessories or items, a minor amount of painting, minor replacement of defective work, minor adjustment of controls or sound systems, or completion or correction of minor exterior work that cannot be completed as a result of weather conditions, will not delay determination of Substantial Completion. If prior written approval is obtained from City for purposes of Substantial Completion, specified areas of the entire Work or Project may be individually certified as Substantially Complete. In no event will Substantial Completion be deemed to have occurred unless and until: (i) a temporary certificate of occupancy has been issued by the appropriate Governmental Authorities (as applicable) and (ii) all terms and Work required under this Agreement have been fulfilled by Contractor and same will have also been approved and accepted by City, subject only to the Punch List items.

6.3.3.2 If requested by City, Contractor must complete and turn-over to City the Project on a phased basis. Each phase will have a separate inspection by the Project Manager, a Punch List generated, and then an inspection by City with final approval and acceptance only after the

Docusign Envelope ID: E6C32D3C-1F2C-430A-AE31-0184A77678E5

Project Manager's Punch List.

6.4 **PARTIAL UTILIZATION**

6.4.1 City at City's option may use and occupy any substantially completed parts of the Work which has specifically been identified in the Agreement Documents, or which City, the Design Professional and Contractor agree constitutes a separately functioning and usable part of the Work that can be used by City for its intended purpose, without significant interference with Contractor's performance of the remainder of the Work, provided, however, if the portion of the Work to be used or occupied has not been found to be substantially complete, City must do so in accordance with Section 6.3 prior to such occupancy.

6.4.2 In lieu of the issuance of a Certificate of Substantial Completion as to part of the Work, City may take over operation of a facility constituting part of the Work whether or not it is substantially complete if such facility is functionally and separately usable; provided that prior to any such takeover, City and Contractor agree in writing as to the division of responsibilities between City and Contractor for security, operation, safety, maintenance, correction period, heat, utilities and insurance with respect to such facility.

6.4.3 Substantial Completion of or City's beneficial occupancy of a part of the Project will not alter the fact that the one-year warranty for the whole Project starts at the date of Final Completion of the whole Project.

6.5 **FINAL ACCEPTANCE**

6.5.1 Unless otherwise expressly agreed to in writing by City, Final Acceptance must be obtained by no later than 30 Days (60 Days for federally funded agreements) after the date of Substantial Completion. Failure to timely obtain Final Acceptance will be a material breach of the Agreement.

6.5.2 Upon receipt of written notice that the Work is ready for final inspection and acceptance, City and Contractor will jointly inspect to verify that the remaining items of Work have been completed. There will be no partial acceptance. Final Acceptance will not occur until all items of Work, including Punch List Items, have been completed to City's satisfaction as reflected in the written Final Acceptance.

6.5.3 Final Payment will not be due, owing, or paid by City until Final Acceptance is issued.

6.5.4 Landscape Establishment Period. Unless otherwise expressly agreed to in writing by City, the Landscape Establishment Period will begin on the date of Final Acceptance of the Project and will run 90 Calendar Days thereafter. Landscape Establishment Period requirements are detailed in General Conditions Appendices, attached herein.

6.6 **CONTINUATION OF WORK**

6.6.1 Permitting Contractor to continue and finish the Work or any part of it after the time fixed for its completion (whether milestone, phase, Substantial Completion or Final Acceptance) or after the date to which the time fixed for any completion may have been extended, does not operate as a waiver by City of any rights under the Agreement Documents, law or equity.

6.6.2 Furthermore, the timely completion of the Work being of the utmost importance under this Agreement, notwithstanding the existence of one or more disputes between the parties

Docusign Envelope ID: E6C32D3C-1F2C-430A-AE31-0184A77678E5

concerning the scope of the Work, the Project Schedule, Agreement Time, payments or any other matter, and further notwithstanding a party's invocation of the Dispute Resolution provisions specified in Appendix 6 of these General Conditions, unless City suspends the Agreement or Contractor's performance pursuant to Section 10 of these General Conditions, Contractor will continue to prosecute the Work, including any Change Order work or Extra Work Orders, in a diligent and timely manner and not stop, slow down or impede by action or inaction the progress of the Work, including commencing performance of and thereafter completing any additional work called out in any Change Order or Extra Work Order issued by Project Manager with the approval of City, so long as City makes payment to Contractor in accordance with Section 8 of these General Conditions.

SECTION 7 - AGREEMENT PRICE

7.1 UNIT PRICE AGREEMENTS

7.1.1 The Agreement Price for all Unit Price Agreements will be the amount set forth in the Agreement or Change Order multiplied by the verified quantity provided.

7.1.2 Measurements of quantities to determine the total Agreement Price must be in accordance with MAG Specification §§ 109.1 and 109.2.

7.1.3 The Unit Price may only be changed as set forth in Section 9 below.

7.2 CHANGE ORDERS

7.2.1 Unit Price Change Orders. The Change Order Price for all Unit Price Change Orders will be the amount set forth in the Change Order multiplied by the verified quantity provided.

7.2.2 Measurements of quantities to determine the total Change Order Price must be in accordance with MAG Specifications §§ 109.1 and 109.2.

7.2.3 The Unit Price may only be changed as set forth in Section 9 below.

7.2.4 MAG Specification § 109.4.1 is modified as follows: Before § 109.4.1, the following is added: Any deduction or increase in the Agreement Price must be supported by a signed, written Change Order fully executed by City, and supported by such backup as the Project Manager may require.

7.3 SALES TAX

Contractor is required to pay all applicable sales tax in accordance with the law of the state of Arizona and this cost must be included in all Agreement Prices. When equipment, materials or supplies generally taxable to Contractor are eligible for a tax exemption due to the nature of the Project, Contractor must assist City in applying for and obtaining such tax credits and exemptions which will be paid or credited to City.

SECTION 8 - PAYMENT

8.1 PAYMENT FOR CONSTRUCTION SERVICES

8.1.1 Payment for the Work will be made in accordance with MAG Standard Specification § 109 as amended below.

8.1.2 Contractor must submit to City for review a completed Contractor Payment Request signed

Docusign Envelope ID: E6C32D3C-1F2C-430A-AE31-0184A77678E5

by Contractor, covering the Work completed as of the date of the Request and accompanied by such supporting documentation as is required by the Agreement Documents and also as City may reasonably require. A Contractor Payment Request will not be considered complete unless it is accompanied by an updated Project Schedule and a certification that the on-site, red lined, as built Drawings are up to date. If payment is requested on the basis of materials and equipment not incorporated in the Work but delivered and suitably, securely stored at the Site or at another location (such as a bonded warehouse) agreed to in writing, the Contractor Payment Request must also be accompanied by such data, satisfactory to City, as will establish City's title to the material and equipment and protect City's interest therein, including applicable insurance. Each subsequent Contractor Payment Request must include an affidavit of Contractor stating that all previous progress payments received on account of the Work have been applied to discharge in full all of Contractor's obligations reflected in prior Contractor Payment Requests.

8.1.3 Except for Work performed under a JOC Agreement, the Contracting Agency will retain 10 percent of all estimates as a guarantee for complete performance of the Agreement in accordance with Arizona Revised Statutes Section 34-221 or 34-607. The Contractor may elect to deposit securities in lieu of retention in accordance with Arizona Revised Statutes Section 34-221, Paragraph C.5. or 34-607, Paragraph B.5.

8.1.4 The payment process functions as follows: Prior to the payment cycle date, Contractor must send a draft Contractor Payment Request to Project Manager. The Project Team will review the Request and agree upon any necessary adjustments. Contractor must certify the final Request by signing and returning to Project Manager.

8.1.5 When construction of the Project is fifty percent (50%) completed, Contractor may request payment of one-half of the retention pursuant to A.R.S. § 34-609(B)(3), subject to all of City's rights to withhold or offset payments, and other rights of City, under the Agreement.

8.1.6 City reserves the right under A.R.S. § 34-609(B)(3) to reinstate the ten percent (10%) retention if City determines that satisfactory progress is not being made.

8.1.7 <u>Contractor's Warranty of Title</u>.

8.1.7.1 Contractor warrants and guarantees that title to all Work, materials and equipment covered by any Contractor Payment Request, whether incorporated in the Project or not, will pass to City at the time of payment, free and clear of all liens, claims, security interests, and encumbrances, provided that this will not preclude the Contractor from installing metering devices or other equipment of utility companies or municipalities, the title of which is commonly retained by the utility company or municipality.

8.1.7.2 No materials, supplies, or equipment for the Work under this Agreement will be purchased subject to any chattel mortgage or under a conditional sale contract or other agreement by which an interest therein, or any part thereof, is retained by the seller or supplier.

8.1.7.3 Nothing contained in this Section will defeat or impair the right of such persons furnishing materials or labor under any bond given by the Contractor for their protection, or any right under any law permitting such persons to look to funds due the Contractor in the hands of the City. The provisions of this Section must be inserted in all subcontracts and material agreements, and notices of its provision must be given to all persons furnishing materials for the Work when no formal agreement is entered into for such materials.

Docusign Envelope ID: E6C32D3C-1F2C-430A-AE31-0184A77678E5

8.2 **PAYMENT UPON SUBSTANTIAL COMPLETION**

8.2.1 No payment will be made upon Substantial Completion, except for a regularly-scheduled monthly progress payment, as allowed by Section 8.2.2.

8.2.2 No further payments will be made to Contractor until Final Acceptance.

8.3 **FINAL PAYMENT**

8.3.1 Subject to all of City's rights to withhold or offset payment, and other rights under the Agreement, Final Payment including remaining retainage will be paid only after:

a. Work has been fully completed (including completion of all incorrect or incomplete work items) and the written Final Acceptance has been issued by City;

b. Necessary operating manuals, any excess materials and supplies necessary for matching materials and supplies incorporated into the Work, acceptable sewer video results (if applicable), and complete "as-built" Drawings (including the Building Information Model, if required by the Agreement Documents) have been delivered to City, as specified in this Section 8.3;

c. Full and unconditional lien waivers and releases by Contractor and any person performing labor or supplying material, machinery, fixtures, or tools for the Work have been delivered to Contractor;

d. All conditions and requirements imposed by City or any financing entity for the corresponding disbursement have been met; and

e. Contractor delivers to City a Contractor Payment Request requesting Final Payment.

8.3.2 Contractor must also submit a signed copy of Contractor's Affidavit Regarding Settlement of Claims, Appendix 3 to these General Conditions, and Certificate of Completion, Appendix 7 to these General Conditions, prior to Final Payment.

8.3.3 In addition, if required under the Project Specific Special Provisions, Contractor must compile a complete equipment list and maintenance manual to be submitted to City as a precondition to Final Payment. The list must include the following items for all equipment supplied under the Plumbing, Electrical, Air Conditioning, Elevator, and other Special Equipment Specifications:

a. Name, Model and Manufacturer.

b. Complete parts lists and Drawings.

c. Local source of supply for replacement parts along with suppliers' telephone numbers.

d. Local service organizations serving the equipment and their telephone numbers.

e. All tags, inspection slips, instruction packages, etc., removed from equipment must be properly identified as to pieces of equipment from which they were taken.

Docusign Envelope ID: E6C32D3C-1F2C-430A-AE31-0184A77678E5

8.3.4 Contractor must also deliver to City, prior to Final Payment, one (1) digital (in the format specified by City), and if requested by City, one (1) hard copy, of any applicable Maintenance manuals. Each manual must include all manufacturer's operation and maintenance instructions and "as-built" Drawings with the list herein specified. It must also include all other diagrams and instructions necessary to properly operate and maintain the equipment, the name, address and telephone number of Contractor and all Subcontractors involved.

8.4 **CITY'S RIGHT TO WITHHOLD PAYMENT**

City may withhold payment to such extent as may be necessary in City's opinion to protect City from loss for which Contractor is responsible, including, without limitation, if any of the following conditions exist:

a. Defective Work not remedied;

b. Third party claims filed or reasonable evidence indicating probable filing of such claims unless security acceptable to City is provided by Contractor;

c. Failure of Contractor to make payments properly to Subcontractors or for labor, materials or equipment;

d. Reasonable evidence that the Work cannot be completed for the unpaid balance of the Agreement Price;

e. Damage to City or another Contractor;

f. Reasonable evidence that the Work will not be completed within the Agreement Time, and that the unpaid balance would not be adequate to cover actual or liquidated damages for the anticipated delay;

g. Failure to carry out the Work in accordance with the Agreement Documents; or

h. Contractor is in default of any of its other obligations under the Agreement Documents.

8.5 **JOINT/DIRECT CHECKS**

To promote the timely completion and progress of the Work or when appropriate and necessary, payments to Contractor may be made jointly to Contractor and its employees, agents, Subcontractors and suppliers, or any of them. For federally funded agreements, see federal provisions for additional requirements for the joint check process.

8.6 **PAYMENT NOT A WAIVER**

No payment (nor use or occupancy of the Project by City) will be deemed acceptance or approval of the Work or as a waiver of any claims, rights, or remedies of City.

8.7 **LIENS AND BOND CLAIMS**

Contractor must make all payments, in the time required, of all labor and materials furnished to Contractor in the course of the Work and must promptly furnish evidence of such payments as City may require. Contractor must pay when due all claims arising out of performance of the Work covered by this Agreement for which a lien may be filed either against the real estate or leasehold interest of City, or against payments due from City to Contractor, or for which a claim may be made against any payment or performance bond or both. To the fullest extent permitted by law, Contractor agrees that no liens or other claims in the nature of a lien against the real estate, leasehold, or other interest of City,

Docusign Envelope ID: E6C32D3C-1F2C-430A-AE31-0184A77678E5

against payment due from City to Contractor, or against any payment or performance bond, must be filed or made in connection with the Work by any party who has supplied professional services, labor, materials, machinery, fixtures, tools, or equipment used in or in connection with the performance of this Agreement, and Contractor agrees to remove or to cause to be removed any such liens or claims in the nature of a lien or bond claim within 10 Days upon receiving notice or obtaining actual knowledge of the existence of such liens or claim. In addition, Contractor agrees to defend, indemnify, and hold harmless City from and against any and all such liens and claims. This paragraph does not apply to claims and liens of Contractor due to non-payment for work performed.

8.8 **FINANCIAL RECORDKEEPING AND CITY'S AUDIT RIGHT**

8.8.1 Records for all Agreements between City and Contractor must, upon reasonable notice, be open to inspection and subject to audit, scanning, and reproduction during normal business working hours. Such audits may be performed by any City's representative or any outside representative engaged by City for the purpose of examining such records. City or its designee may conduct such audits or inspections throughout the term of this Agreement and for a period of five years after Final Payment or longer if required by law. City's representatives may (without limitation) conduct verifications such as counting employees at the Site, witnessing the distribution of payroll, verifying information and amounts through interviews and written confirmations with Contractor employees, field and agency labor, Subcontractors, and vendors.

8.8.2 Contractor's "records" must include any and all information, materials and data of every kind and character, including without limitation, records, books, papers, documents, subscriptions, recordings, agreements, purchase orders, leases, contracts, commitments, arrangements, notes daily diaries, superintendent reports, drawings, receipts, vouchers and memoranda, and any and all other agreements, sources of information and matters that may in City's judgment have any bearing on or pertain to any matters, rights, duties or obligations under or covered by any Agreement Document. Such records must include (hard copy, as well as computer readable data if it can be made available), written policies and procedures; time sheets; payroll registers; payroll records; cancelled payroll checks; subcontract files (including proposals of successful and unsuccessful bidders, bid recaps, negotiation notes, etc.); original bid estimates; estimating work sheets; correspondence; Change Order files (including documentation covering negotiated settlements); back-charge logs and supporting documentation; invoices and related payment documentation; general ledger, information detailing cash and trade discounts earned, insurance rebates and dividends; and any other Contractor records which may have a bearing on matters of interest to City or the Project in connection with Contractor's dealings with City or the Project (all foregoing hereinafter referred to as "records") to the extent necessary to adequately permit evaluation and verification of any or all of the following:

a. Compliance with Agreement requirements for deliverables;

b. Compliance with approved Plans and Specifications;

c. Compliance with § 14.9 below;

d. Compliance with Agreement provisions regarding the pricing of Change Orders;

e. Accuracy of Contractor representations regarding the pricing of invoices; or

f. Accuracy of Contractor representations related to claims submitted by

Docusign Envelope ID: E6C32D3C-1F2C-430A-AE31-0184A77678E5

Contractor or any of their employees.

8.8.3 Contractor must require all payees (examples of payees include Subcontractors, Suppliers, Insurance Carriers, etc.) to comply with the provisions of this Section by including the requirements hereof in a written agreement between Contractor and payee. Contractor will ensure that all payees (including those entering into lump sum agreements) have the same right to audit provisions contained in this Agreement included in their agreements with Contractor.

8.8.4 City's authorized representative(s) (including, without limitation, Project Manager) must have reasonable access to Contractor's facilities, must be allowed to interview all current or former employees to discuss matters pertinent to the performance of this Agreement and must be provided adequate and appropriate work space, in order to conduct audits in compliance with this Section.

8.8.5 If an audit inspection or examination in accordance with this Section, discloses overpricing or overcharges to City (of any nature) by Contractor or Contractor's Subcontractors in excess of $100,000 in addition to making adjustments for the overcharges, the reasonable actual cost of City's audit must be reimbursed to City by Contractor. Any adjustments or payments which must be made as a result of any such audit or inspection of Contractor's invoices or records must be made within a reasonable amount of time (not to exceed 90 Days) from presentation of City's findings to Contractor.

8.8.6 In addition to the normal paperwork documentation Contractor typically furnishes to City, Contractor agrees to furnish, upon written request from City, any of the documentation necessary for City to exercise its audit rights under this Section 8.8 in computer readable file formats (Word, Excel, or .pdf), as City may designate.

8.8.7 City, its authorized representative, and the appropriate agency, reserve the right to audit Contractor's records in compliance with local, state or federal policies, statutes or at City's discretion, within three (3) years of Final Acceptance of the Work.

SECTION 9 - CHANGES TO THE AGREEMENT

9.1 **FIELD ORDERS**

City may authorize minor changes in the Work not involving an adjustment in the Agreement Price or the Agreement Times, which are consistent with the overall intent of the Agreement Documents. These may be accomplished by a written Field Order on the standard form approved and executed by City. Such Field Orders must be binding and Contractor must perform the change promptly. If Contractor believes that a Field Order justifies an increase in the Agreement Price or Agreement Time, Contractor may make a claim therefor as provided in Section 7.2.

9.2 **EXTRA WORK/CHANGES IN THE WORK**

9.2.1 City reserves the right to make such changes in the Plans and Specifications for the Work, as it may deem appropriate and any such change as set forth in a written Change Order must be deemed a part of this Agreement as if originally incorporated herein.

9.2.2 In the event City and Contractor cannot agree on the terms of a Change Order, or when circumstances otherwise require, the Project Manager has the authority to direct the Contractor to perform extra work, if the work in question is an item not provided for in the

Docusign Envelope ID: E6C32D3C-1F2C-430A-AE31-0184A77678E5

Agreement as awarded. The Project Manager will have the authority to determine, based upon factual evidence presented by the Contractor, whether the work in question is an item not provided for in the Agreement as awarded. If the Project Manager directs the Contractor to perform extra work, the Project Manager's instructions will include a price that the Contractor cannot exceed in charging the City for the extra work. Upon receipt of the Project Manager's directions to perform extra work, the Contractor must promptly proceed with the extra work and document the actual cost thereof. Contractor's right to payment for extra work will be determined under Subsection 9.2.4 below. The Contractor is responsible to manage the extra work to ensure that the price limits set by the Project Manager are not exceeded. Contractor must perform the extra work and submit documentation for the actual cost of the extra work to the City. A Change Order will be issued to cover this work.

9.2.3 Contractor will not be entitled to payment for extra work unless a written Change Order, in form and content prescribed by City, has been executed by City. On all requests for Change Orders, Contractor must specify the increased or decreased costs and whether it believes any extensions of time will be necessary to complete its Work as modified by the Change Order. If extra work is performed under Subsection 9.2.2 above, a corresponding Change Order will be prepared, approved and processed by City before payment can be made to Contractor.

9.2.4 In general, pricing for Change Orders will include the same mark-up percentages that were in effect when the Agreement was awarded. The cost or credit to the City resulting from a change in the Work is subject to Appendix 1 (Policy Statement for Calculating Delays and Damages) and will be determined, based on the type of pricing for the Agreement involved, as follows:

a. By mutual acceptance of a lump sum properly itemized in a form acceptable to City;

b. By unit prices stated in the Agreement Documents;

c. When the City determines that a Unit Price Book Job Order associated with a Job Order Agreement requires a Change Order, by using the same Total Cost Data and CCI that are in effect when the Change Order is anticipated to be issued; or

d. By actual cost and a percentage fee covering overhead and profit, as follows:

(i) Contractor will perform the extra work and be compensated for actual cost of labor, materials and equipment.

(ii) Contractor will have the right to add the fee percentage applicable to the Work under the Agreement, or if no such fee has been agreed to by the parties, not more than five percent (5%) to the Subcontractor's prices for authorized extra work performed solely by Subcontractors. Such percentage will include all of Contractor's charges for overhead, profit, administration and supervision.

(iii) Contractor or Subcontractor will have the right to add the fee percentage applicable to Work under the Agreement for self-performed extra work, or if no such fee has been agreed to by the parties, Contractor's or Subcontractor's maximum total allowable additions for overhead, profit, administration and supervision will

Docusign Envelope ID: E6C32D3C-1F2C-430A-AE31-0184A77678E5

not exceed ten percent (10%) of actual verifiable labor, materials and equipment for such self- performed extra work.

9.2.5 Any agreement which modifies the terms of the Agreement (including Change Orders) will be approved in writing by the Project Manager. Once properly executed by both parties, these modifications to the Agreement will have the same effect as if they had been included in the original Agreement.

9.3 **ACCURACY OF CHANGE ORDER PRICING INFORMATION**

9.3.1 Subject to Sections 9.3.2 through 9.3.4, signature by the contracting parties constitutes full accord and satisfaction between City and Contractor for all costs, damages, and expenses of whatever kind of nature, including delay, impact or acceleration damages, which may be occasioned by a Change Order of other modification of the Agreement agreed to in writing.

9.3.2 Accurate Change Order Pricing Information: Contractor agrees that it is responsible for submitting accurate cost and pricing data to City to support its Fixed Price, Unit Price, or Cost Plus Change Order Proposals or other Agreement Price adjustments under the Agreement. Contractor further agrees to submit Change Order proposals with cost and pricing data which is accurate, complete, current, and in accordance with the terms of the Agreement with respect to pricing of change orders. Contractor agrees that any "buy-out savings" on Change Orders will accrue 100% to Owner. "Buy-out savings" are defined as any savings negotiated by the Contractor with a Subcontractor or a Material Supplier after receiving approval of a Change Order amount that was designated to be paid to a specific Subcontractor or Supplier for the Approved Change Order work.

9.3.3 Right to Verify Change Order Pricing Information: Contractor agrees that City, through its designated representative, will have the right to examine, copy, and scan the records of the Contractor, Subcontractor or Sub-Subcontractor's records (during the Agreement period and up to three years after final payment is made on the Agreement) to verify the accuracy and appropriateness of the pricing data used to price all Change Order proposals or claims. Contractor agrees that if City determines the cost and pricing data submitted (whether approved or not) was inaccurate, incomplete, not current, or not in compliance with the terms of the Agreement regarding pricing of Change Orders, an appropriate Agreement Price adjustment will be made. Such post-approval Contact Price adjustments will apply to all levels of contractors and Subcontractors and to all types of Change Order proposals, specifically including Fixed Price, Unit Price, and Cost Plus Change Orders.

9.3.4 Requirements for Detailed Change Order Pricing Information: Contractor agrees to provide a detailed breakdown of allowable labor and labor burden cost (i.e., base wage rate of applicable classifications of workers, payroll taxes, and insurance and benefits costs). This information will be used to evaluate the potential cost of labor and labor burden related to Change Order work. It is intended that this information represent an accurate estimate of the Contractor's actual labor and labor burden cost components. Information is not intended to establish fixed billing or Change Order pricing labor rates. However, at the time Change Orders are priced, the submitted cost data for labor rates may be used to price Change Order work. The accuracy of any such agreed upon labor rate cost components used to price Change Orders will be subject to later audit. Approved Change Order amounts may be adjusted later to correct the impact of inaccurate labor cost components if the agreed upon labor cost components are determined to be inaccurate.

Docusign Envelope ID: E6C32D3C-1F2C-430A-AE31-0184A77678E5

9.4 **EMERGENCIES**

In any emergency affecting the safety of persons or property, Contractor will act, at its discretion, to prevent threatened damage, injury or loss. Any change in the Agreement Price or Agreement Time resulting from emergency work will be determined as provided in this Section.

9.5 **DIFFERING SITE CONDITIONS**

9.5.1 If Differing Site Conditions are encountered at the Project Site, then notice by the observing party must be given to the other party promptly before conditions are disturbed (to the extent practicable) and in no event later than 14 Days after first observance of the conditions. City will promptly investigate such conditions and, if City determines that Differing Site Conditions exist and they materially cause an increase in the cost of, or time required for, performance of any part of the Work, Contractor will be entitled to equitable adjustment in the Agreement Price or Construction Schedule (and other time requirements), or both. If it is determined by City that the conditions at the Project Site are not Differing Site Conditions and no change is justified, then City will so notify Contractor in writing, stating the reasons. Claims in opposition to such determination must be made within 14 Days after City has given notice of its decision. If City and Contractor cannot agree on an adjustment in the Agreement Price or Construction Schedule (and other time requirements), the adjustment may be submitted to dispute resolution as provided these General Conditions.

9.6 **CHANGES IN LAWS, REGULATIONS, OR LEGAL REQUIREMENTS OR TAXES**

In the event of a material change in applicable Laws, Regulations, or Legal Requirements, or taxes subsequent to the date of the Agreement by the parties, Contractor may be entitled to a Change Order, in City's discretion, to the extent Contractor can document to the satisfaction of City that such change significantly increases Contractor's actual cost of performance of the Work.

SECTION 10 -SUSPENSION AND TERMINATION

10.1 **SUSPENSION**

City may suspend the Agreement and Contractor's performance in accordance with MAG Specifications § 105.1 and 108.7.

10.2 **TERMINATION BY THE CITY FOR CAUSE**

10.2.1 MAG Specifications § 108.11 applies to the Agreement.

10.2.2 City may also terminate the Agreement if City determines, in its sole discretion that Contractor has:

a. After prior written notice, refused or failed to supply enough properly skilled workers or proper materials;

b. After prior written notice, failed to make payment to Subcontractors for materials or labor in accordance with the respective agreements between Contractor and the Subcontractors;

c. After prior written notice, disregards laws, ordinances, or rules, regulations or orders of a public authority having jurisdiction;

d. After prior written notice, repeatedly failed to comply with written directives from City;

Docusign Envelope ID: E6C32D3C-1F2C-430A-AE31-0184A77678E5

e. Is adjudged as bankrupt or insolvent;

f. Made a general assignment for the benefit of creditors;

g. Appointed a trustee or receiver for itself or any of its property;

h. Filed a petition to take advantage of any debtor's act, or to reorganize under the bankruptcy or similar laws; or

i. Otherwise breached a provision of the Agreement Documents or any other Agreement between City and Contractor.

10.2.3 When any of the above reasons exist, City may terminate the Agreement, without prejudice to any other rights or remedies of City, after giving Contractor and Contractors' surety, if any, 7 Days written notice of City's intent to terminate the Agreement and Contractor's failure to cure any such reasons. Upon such termination, City may: (1) take possession of the Site and of all materials thereon owned by Contractor; or (2) finish the Work by whatever reasonable method City may deem expedient. When City terminates the Agreement for one of the reasons state above, Contractor will not be entitled to receive further payment until the Work is finished. If the unpaid balance of the Agreement Price existing at the time of such termination exceeds the costs and expenses of finishing the Work and any other damages incurred by City, such excess will be paid to Contractor. If such costs, expenses and damages exceed such unpaid balance, Contractor must pay the difference to City. This obligation for payment will survive termination of the Agreement.

10.3 **TERMINATION BY CITY FOR CONVENIENCE**

City may also terminate the Agreement at any time for its convenience upon 7 Days written notice to Contractor specifying the termination date. In the event of termination which is not the fault, in whole or in part, of Contractor, City will pay to Contractor only such compensation, including reimbursable expenses, due for Work properly performed on the Project prior to the termination date. Upon any termination of the Agreement, no further payments will be due from City to Contractor.

10.4 **A.R.S. § 38-511**

The Agreement is subject to, and may be terminated by City in accordance with, the provisions of A.R.S. § 38-511.

SECTION 11 -INSURANCE AND BONDS

11.1 **INSURANCE REQUIREMENTS**

11.1.1 After Agreement award, the Contractor must furnish the City a certificate of insurance on a standard insurance industry ACORD form. The ACORD form must be issued by an insurance company authorized to transact business in the State of Arizona possessing a current A.M. Best, Inc. rating of A-7, or better and legally authorized to do business in the State of Arizona with policies and forms satisfactory to City. Provided, however, the A.M. Best rating requirement may not be deemed to apply to required Worker's Compensation coverage.

11.1.2 The Contractor and any of its Subcontractors must procure and maintain, until all of their obligations have been discharged, including any warranty periods under this Agreement are satisfied, the insurances set forth below.

11.1.3 The insurance requirements set forth below are minimum requirements for this Agreement and in no way limit the indemnity covenants contained in this Agreement.

Docusign Envelope ID: E6C32D3C-1F2C-430A-AE31-0184A77678E5

11.1.4 The City in no way warrants that the minimum insurance limits contained in this Agreement are sufficient to protect Contractor from liabilities that might arise out of the performance of the Agreement services under this Agreement by Contractor**,** its agents, representatives, employees, or Subcontractors and the Contractor is free to purchase any additional insurance as may be determined necessary.

11.1.5 Failure to demand evidence of full compliance with the insurance requirements in this Agreement or failure to identify any insurance deficiency will not relieve the Contractor from, nor will it be considered a waiver of its obligation to maintain the required insurance at all times during the performance of this Agreement.

11.1.6 Use of Subcontractors: If any Work is subcontracted in any way, the Contractor must execute a written agreement with Subcontractor containing the same Indemnification Clause and Insurance Requirements as the City requires of the Contractor in this Agreement. The Contractor is responsible for executing the Agreement with the Subcontractor and obtaining Certificates of Insurance and verifying the insurance requirements.

11.2 **MINIMUM SCOPE AND LIMITS OF INSURANCE**

11.2.1 The Contractor must provide coverage with limits of liability not less than those stated below.

11.2.1.1 Commercial General Liability-Occurrence Form. Contractor must maintain "occurrence" form Commercial General Liability insurance with a limit of not less than $2,000,000 for each occurrence, $4,000,000 aggregate. Said insurance must also include coverage for products and completed operations, independent contractors, personal injury and advertising injury. If any Excess insurance is utilized to fulfill the requirements of this paragraph, the Excess insurance must be "follow form" equal or broader in coverage scope than underlying insurance.

11.2.1.2 Automobile Liability-Any Automobile or Owned, Hired and Non-Owned Vehicles. Contractor must maintain Business/Automobile Liability insurance with a limit of $1,000,000 each accident on Contractor owned, hired, and non-owned vehicles assigned to or used in the performance under this Agreement. If any Excess or Umbrella insurance is utilized to fulfill the requirements of this paragraph, the Excess or Umbrella insurance must be "follow form" equal or broader in coverage scope than underlying insurance.

11.2.1.3 Workers Compensation and Employers Liability Insurance. Contractor must maintain Workers Compensation insurance to cover obligations imposed by federal and state statutes having jurisdiction of Contractor employees engaged in the performance of Work under this Agreement and must also maintain Employers' Liability insurance of not less than $1,000,000 for each accident and $1,000,000 disease for each employee.

11.2.1.4 Builders' Risk/Installation Floater Insurance. The Contractor bears all responsibility for loss to all equipment or Work under construction. Unless waived in writing by the City the Contractor will purchase and maintain in force Builders' Risk/Installation Floater insurance on the entire Work until completed and accepted by the City. This insurance will be Special Causes of Loss policy form, (minimally including perils of fire, flood, lightning, explosion, windstorm and hail, smoke, aircraft and vehicles, riot and civil commotion, theft, vandalism, malicious mischief, and collapse), completed value, replacement cost policy form equal to the Agreement Price and all subsequent modifications. The Contractor's Builders'

Docusign Envelope ID: E6C32D3C-1F2C-430A-AE31-0184A77678E5

Risk/Installation Floater insurance must be primary and not contributory.

a. Builders' Risk/Installation Floater insurance must cover the entire Work including reasonable compensation for architects and engineers' services and expenses and other "soft costs" made necessary by an insured loss. Builders' Risk/Installation Floater insurance must provide coverage from the time any covered property comes under the Contractor's control and or responsibility, and continue without interruption during course of construction, renovation and or installation, including any time during which any Project property or equipment is in transit, off Site, or while on Site for future use or installation. Insured property must include, but not be limited to, scaffolding, false work, and temporary buildings at the Site. This insurance must also cover the cost of removing debris, including demolition as may be legally required by operation of any law, ordinance, regulation or code.

b. The Contractor must also purchase and maintain Boiler and Machinery insurance with the same requirements as Builders' Risk/Installation Floater insurance cited above if the Work to be performed involves any exposures or insurable property normally covered under a Boiler and Machinery insurance policy or made necessary as required by law or testing requirements in the performance of this Agreement. The Contractor will be responsible for any and all deductibles under these policies and the Contractor waives all rights of recovery and subrogation against the City under the Contractor- Builders' Risk/Installation Floater insurance described herein.

c. Builders' Risk/Installation Floater Insurance must be maintained until whichever of the following first occurs: (i) final payment has been made; or, (ii) until no person or entity, other than the City, has an insurable interest in the property required to be covered.

d. The Builders' Risk/Installation Floater insurance must be endorsed so that the insurance will not be canceled or lapse because of any partial use or occupancy by the City.

e. The Builders Risk/Installation Floater insurance must include as named insureds, the City, the Contractor, and all tiers of Subcontractors and others with an insurable interest in the Work who will be named as additional insureds unless they are able to provide the same level of coverage with the City and Contractor named as additional insureds. Certificates must contain a provision that the insurance will not be canceled or materially altered without at least 30 Days advance notice to the City. The City must also be named as a Loss Payee under the Builders' Risk/Installation Floater coverage.

f. The Builders Risk/Installation Floater insurance must be written using the Special Causes of Loss policy form, replacement cost basis.

g. All rights of subrogation under the Builders Risk/Installation Floater insurance are, by this Agreement, waived against the City, its officers, officials, agents and employees.

h. The Contractor is responsible for payment of all deductibles under the Builders' Risk/Installation Floater insurance policy.

Docusign Envelope ID: E6C32D3C-1F2C-430A-AE31-0184A77678E5

11.2.1.5 Pollution Liability Insurance (Including Errors and Omissions). For Job Orders, Pollution Liability Insurance is only required if applicable and determined on a project specific basis. Contractor must maintain Pollution Liability Insurance with a limit of not less than $5,000,000 per loss, $5,000,000 aggregate for losses caused by pollution conditions including coverage for bodily injury, property damage, defense costs, clean-up costs, and completed operations that arise from the operations of Contractor as described in this Agreement.

a. The policy must provide for complete professional service coverage, including coverage for pollution liability that is a result of a breach of professional duties.

b. The policy must provide for protection again claims for third-party bodily injury, property damage, or environmental damage caused for pollution conditions resulting from general contracting activities for which Contractor is legally liable.

c. The policy must provide for cleanup costs when mandated by governmental entities, when required by law, or as a result of third-party claims.

d. Completed Operations Coverage must be kept in place for up to the statute of repose.

e. The policy must be endorsed to include the following additional insured language: "City, its elected officials, trustees, employees, agents, and volunteers must be named as additional insureds with respect to liability arising out of the activities performed by, or on behalf of Contractor".

f. If Work under this Agreement requires the transportation of any hazardous material or regulated substances, Contractor must carry Auto Liability with a CA 9948 endorsement or equivalent.

g. If Work under this Agreement requires the disposal of any hazardous materials from the job site, Contractor must obtain a certificate of insurance for Pollution Legal Liability from the disposal site operator with a limit of not less than $5,000,000 per loss, $5,000,000 aggregate.

11.3 **ADDITIONAL POLICY PROVISIONS REQUIRED**

11.3.1 Self-Insured Retentions or Deductibles. Any self-insured retentions and deductibles must be declared and approved by the City. If not approved, the City may require that the insurer reduce or eliminate any deductible or self-insured retentions with respect to the City, its officers, officials, agents, employees, and volunteers.

11.3.2 The Contractor's insurance must contain broad form contractual liability coverage.

11.3.3 The Contractor's insurance coverage must be primary insurance with respect to the City, its officers, officials, agents, and employees. Any insurance or self-insurance maintained by the City, its officers, officials, agents, and employees will be in excess of the coverage provided by the Contractor and must not contribute to it.

11.3.4 The Contractor's insurance must apply separately to each insured against whom claim is made or suit is brought, except with respect to the limits of the insurer's liability.

11.3.5 Coverage provided by the Contractor must not be limited to the liability assumed under the

Docusign Envelope ID: E6C32D3C-1F2C-430A-AE31-0184A77678E5

indemnification provisions of this Agreement.

11.3.6 The policies must contain a severability of interest clause and waiver of subrogation against the City, its officers, officials, agents, and employees, for losses arising from Work performed by the Contractor for the City.

11.3.7 The Contractor, its successors and or assigns, are required to maintain Commercial General Liability insurance as specified in this Agreement for a minimum period of 3 years following completion and acceptance of the Work. The Contractor must submit a Certificate of Insurance evidencing Commercial General Liability insurance during this 3 year period containing all the Agreement insurance requirements, including naming the required Additional Insureds set forth herein.

11.3.8 If a Certificate of Insurance is submitted as verification of coverage, the City will reasonably rely upon the Certificate of Insurance as evidence of coverage but this acceptance and reliance will not waive or alter in any way the insurance requirements or obligations of this Agreement.

11.3.9 Insurance Cancellation During Agreement Term.

11.3.9.1 If any of the required policies expire during the life of this Agreement, the Contractor must forward renewal or replacement Certificates to the City within 10 Days after the renewal date containing all the required insurance provisions.

11.3.9.2 Each insurance policy required by the insurance provisions of this Agreement must provide the required coverage and must not be suspended, voided or canceled except after 30 Days prior written notice has been given to the City, except when cancellation is for non-payment of premium, then 10 Days prior notice may be given. Such notice must be sent directly to Chandler Law-Risk Management Department, Post Office Box 4008, Mailstop 628, Chandler, Arizona 85225. If any insurance company refuses to provide the require notice, the Contractor or its insurance broker must notify the City of any cancellation, suspension, non-renewal of any insurance within 7 Days of receipt of insurers' notification to that effect.

11.3.10 City as Additional Insured. The above-referenced policies are to contain, or be endorsed to contain, the following provisions:

11.3.10.1 The Commercial General Liability and Automobile Liability policies are to contain, or be endorsed to contain, the following provisions: The City, its officers, officials, agents, and employees are additional insureds with respect to liability arising out of activities performed by, or on behalf of, the Contractor including the City's general supervision of the Contractor; Products and Completed Operations of the Contractor; and automobiles owned, leased, hired, or borrowed by the Contractor.

11.3.10.2 The City, its officers, officials, agents, and employees must be additional insureds to the full limits of liability purchased by the Contractor even if those limits of liability are in excess of those required by this Agreement.

11.4 BONDS AND OTHER PERFORMANCE SECURITY

11.4.1 After Agreement award, Contractor must provide a Performance Bond and a Payment Bond, each in an amount equal to the full amount of the Agreement Price.

11.4.2 Each such bond must be executed by a surety company or companies holding a Certificate

Docusign Envelope ID: E6C32D3C-1F2C-430A-AE31-0184A77678E5

of Authority to transact surety business in the State of Arizona, issued by the Director of the Arizona Department of Insurance and must be named in the current list of "Companies Holding Certificates of Authority as Acceptable Sureties on Federal Bonds and as Acceptable Reinsuring Companies" as published in Circular 570 (amended) by the Audit Staff Bureau of Accounts, U.S. Treasury Department. A copy of the Certificate of Authority must accompany the bonds. The Certificate must have been issued or updated within two (2) years prior to the execution of this Agreement. The bonds must be written or countersigned by an authorized representative of the surety who is either a resident of the state of Arizona or whose principal office is maintained in this state, as by law required.

11.4.3 The bonds must be made payable and be acceptable to City. The bond forms for the performance and payment bonds must be in the forms required under A.R.S. § 34-221, *et. Seq.,* as in Appendices 4 and 5 of these General Conditions.

11.4.4 Upon the request of any person or entity appearing to be a potential beneficiary of bonds covering payment of obligations arising under the Agreement Documents, Contractor must promptly furnish a copy of the bonds or must permit a copy to be made.

11.4.5 All bonds submitted for this Project must be provided by a company which has been rated AM Best rating of A- or better for the prior four quarters by the latest edition of the 'Results Best's Key Rating Guide (Property/Casualty)" published by the A.M. Best Company.

11.4.6 Personal or individual bonds are not acceptable.

11.4.7 If the surety on any Bond furnished by Contractor is declared a bankrupt or becomes insolvent, or Contractor's right to do business is terminated in any state where any part of the Project is located, or it ceases to meet the requirements of this Section 11.4, Contractor must within 5 Days thereafter substitute another Bond and surety, both of which must be acceptable to City.

SECTION 12 - INDEMNIFICATION

12.1 To the extent permitted by law, the Contractor and its owners, officers, directors, agents, employees, and subconsultants (collectively "Indemnitor") must indemnify, save, and hold harmless the City and its officers, officials, agents, and employees (collectively "Indemnitee") from any and all claims, actions, liabilities, damages, losses, or expenses (including court costs, attorneys' fees, and costs of claim processing, investigation, and litigation) (collectively "Claims") caused or alleged to be caused, in whole or in part, by the negligent, reckless, wrongful, or willful acts, errors, or omissions of Indemnitor in connection with this Agreement. This indemnity includes any Claim or amount arising out of or recovered under workers' compensation laws or on account of Indemnitor's failure to conform to any federal, state, or local law, statute, ordinance, rule, regulation, or court decree. Indemnitor must indemnify Indemnitee from and against any and all Claims, except those arising solely from Indemnitee's own negligent, reckless, wrongful, or willful acts, errors, or omissions. Indemnitor is responsible for primary loss investigation, defense, and judgment costs where this indemnification applies. In consideration of the award of this Agreement, Indemnitor agrees to waive all rights of subrogation against Indemnitee for losses arising from or related to this Agreement. Indemnitor's obligations under this provision survive the termination or expiration of this Agreement.

SECTION 13 -DISPUTE RESOLUTION

Docusign Envelope ID: E6C32D3C-1F2C-430A-AE31-0184A77678E5

13.1 All disputes arising out of or relating to the Agreement, the Work or the Project, other than termination under Section 10, will be resolved pursuant to the Dispute Resolution process set forth in Appendix 6 of these General Conditions, and not pursuant to MAG Specifications § 110.

13.2 Contractor agrees that during any dispute between the parties, Contractor will continue to perform its obligations under the Agreement until such dispute is resolved.

13.3 Notwithstanding any other provision in this Agreement, City has the right to immediately file in court and pursue an action for a temporary restraining order and injunctive relief against Contractor if City determines that such action is necessary to protect its interests under the Agreement, to obtain specific performance of any provision of the Agreement, to advance the completion of the Project, or to protect health, welfare and safety.

SECTION 14 - MISCELLANEOUS PROVISIONS

14.1 AGREEMENT DOCUMENTS

14.1.1 The Agreement Documents are intended to permit the parties to complete the Work and all obligations required by the Agreement Documents within the Agreement Times for the Agreement Price. The Agreement Documents are intended to be complementary and interpreted in harmony so as to avoid conflict, with words and phrases interpreted in a manner consistent with construction and design industry standards.

14.1.2 It is the intent of the Agreement Documents to describe a functionally complete Project (or part thereof) to be constructed in accordance with the Agreement Documents. Any labor, documentation, services, materials, or equipment that may reasonably be inferred from the Agreement Documents or from prevailing custom or trade usage as being required to produce the intended result must be provided by Contractor whether or not specifically called for at no additional cost to City.

14.1.3 The Agreement Documents establish the rights and obligations of the parties and include the Agreement, Addenda (which pertain to the Agreement Documents), Contractor's Bid or Proposal (including documentation accompanying the Bid and any post-Bid documentation submitted prior to Agreement award) when attached as an exhibit to the Agreement, the accepted Project Schedule, the Notice to Proceed, the Performance Bond, the Payment Bond, Project Design, Engineering and Specifications, these General Conditions, the Project Specific Special Provisions, Technical Specifications, Agreement Drawings, as the same may be more specifically identified in the Agreement, Change Orders, Work Change Directives, Field Orders and the written interpretations and clarifications of the Design Professional or City representative and Modifications issued after execution of the Agreement. Approved Shop Drawings and the reports and drawings of subsurface and physical conditions are not Agreement Documents.

14.1.4 In the event of any inconsistency, conflict, or ambiguity between or among the Agreement Documents, the Agreement Documents will take precedence as follows from highest to lowest: Change Orders, Addenda, Agreement, Project Specific Special Provisions, General Conditions, Technical Specifications, Drawings/Plans, Chandler Amendments to MAG Standard Specifications and Chandler Standard Details, and MAG Uniform Standard Specifications and Details for Public Works Construction. If applicable to this Agreement, Federal Provisions prevail.

Docusign Envelope ID: E6C32D3C-1F2C-430A-AE31-0184A77678E5

14.1.5 On the Drawings, given dimensions will take precedence over scaled measurements and large scale drawings over small-scale drawings.

14.1.6 Clarifications and interpretations of the Agreement Documents will be issued by the Design Professional through the City.

14.1.7 The headings used in this Agreement or any other Agreement Documents, are for ease of reference only and must not in any way be construed to limit or alter the meaning of any provision.

14.1.8 The Agreement Documents form the entire agreement between City and Contractor. No oral representations or other agreements have been made by the parties except as specifically stated in the Agreement Documents.

14.1.9 The Agreement Documents may not be changed, altered, or amended in any way except in writing signed by a duly authorized representative of each party in the form of a Change Order.

14.1.10 Re-Use of Documents. Neither Contractor nor any Subcontractor, manufacturer, fabricator, supplier or distributor will have or acquire any title to or ownership rights in any of the Drawings, Specifications or other documents (or copies of any thereof) prepared by or bearing the seal of the Design Professional; and they must not re-use any of them on extensions of the Project or any other project without written consent of City and the Design Professional and specific written verification or adaptation by the Design Professional.

14.2 REFERENCE STANDARDS

14.2.1 Reference to standards, specifications, manuals, or codes of any technical society, organization, or association, or to Laws or Regulations, whether such reference be specific or by implication, will mean the standard, specification, manual, code, or Laws or Regulations in effect at the time of opening of Bids (or on the Effective Date of the Agreement if there were no Bids), except as may be otherwise specifically stated in the Agreement Documents.

14.2.2 The provisions of any such standard, specification, manual or code, or any instruction of a Supplier will not change the duties or responsibilities of City, Contractor, Design Professional or Project Manager, or any of their Subcontractors, consultants, agents, or employees from those set forth in the Agreement Documents, nor will any such provision or instruction assign to City, Contractor, Design Professional, or any of their agents, or employees any duty or authority to supervise or direct the performance of the Work or any duty or authority to undertake responsibility inconsistent with the provisions of the Agreement Documents.

14.3 COMPLIANCE WITH ARIZONA LAW AND FEDERAL LAW

14.3.1 Compliance with A.R.S. § 41-4401. Pursuant to the provisions of A.R.S. § 41-4401, the Contractor hereby warrants to the City that the Contractor and each of its subcontractors ("Subcontractors") must comply with all Federal Immigration laws and regulations that relate to the immigration status of their employees and the requirement to use E-Verify set forth in A.R.S. §23-214(A).

14.3.2 A breach of the Contractor Immigration Warranty constitutes a material breach of this Agreement and subject to penalties up to and including termination of this Agreement.

Docusign Envelope ID: E6C32D3C-1F2C-430A-AE31-0184A77678E5

14.3.3 The City retains the legal right to inspect the papers of any Contractor or Subcontractor employee who works on this Agreement to ensure that the Contractor or Subcontractor is complying with the Contractor Immigration Warranty. The Contractor agrees to assist the City in the conduct of any such inspections.

14.3.4 The City may, at its sole discretion, conduct random verifications of the employment records of the Contractor and any Subcontractors to ensure compliance with Contractors Immigration Warranty. The Contractor agrees to assist the City in performing any such random verifications.

14.3.5 The provisions of this Article must be included in any agreement the Contractor enters into with any and all of its subcontractors who provide services under this Agreement or any subcontract. "Services" are defined as furnishing labor, time or effort in the State of Arizona by a contractor or subcontractor. Services include construction or maintenance of any structure, building or transportation facility or improvement to real property.

14.4 **HAZARDOUS ENVIRONMENTAL CONDITIONS**

14.4.1 Contractor will not be responsible for any Hazardous Environmental Condition uncovered or revealed at the Site which was not shown or indicated in Drawings or Specifications or identified in the Agreement Document to be within the scope of the Work. Contractor will be responsible for a Hazardous Environmental Condition created with any materials brought to the Site by Contractor, Subcontractors, Suppliers, or anyone else for whom Contractor is responsible.

14.4.2 If Contractor encounters a Hazardous Environmental Condition or if Contractor or anyone for whom Contractor is responsible creates a Hazardous Environmental Condition. Contractor must immediately:

a. Secure or otherwise isolate such condition;

b. Stop all Work in connection with such condition and in any area affected thereby; and

c. Notify City and promptly thereafter confirm such notice in writing.

14.4.3 City will promptly retain a qualified expert to evaluate such condition or take corrective action, if any.

14.4.4 Contractor will be responsible for any and all civil or criminal penalties, fines, damages, or other charges imposed by any regulatory agency or court for sewage discharges that are in violation of applicable statutes and laws and that are a result, direct or indirect, of work performed under this Agreement. Contractor will also be responsible for reimbursement to City for administration, reporting, and tracking expenses required as a result of any spill event. In the event the regulatory agency or court imposes a probationary period, Contractor must post bond for the probationary period to ensure that all such costs are reimbursed to City. This responsibility will apply whether penalties are imposed directly on Contractor or any of its Subcontractors, or the City of Chandler. Contractor must defend and indemnify City against such penalties. Regulatory agencies may include, but are not limited to, the Arizona Department of Environmental Quality (ADEQ) and the United States Environmental Protection Agency (USEPA).

14.5 **COOPERATION AND FURTHER DOCUMENTATION**

Docusign Envelope ID: E6C32D3C-1F2C-430A-AE31-0184A77678E5

Contractor agrees to provide City such other duly executed documents as may be reasonably requested by City to implement the intent of the Agreement Documents.

14.6 **ASSIGNMENT**

Neither Contractor nor City will, without the written consent of the other assign, transfer or sublet any portion of this Agreement or part of the Work or the obligations required by the Agreement Documents, any such assignment will be void, will transfer no rights to the purported assignee, and would be a material breach of the Agreement.

14.7 **SUCCESSORS**

Contractor and City intend that the provisions of the Agreement Documents are binding upon the parties, their employees, agents, heirs, successors and assigns.

14.8 **LAWFUL PRESENCE**

Pursuant to A.R.S. §§ 1-501 and 1-502, City is prohibited from awarding an agreement to any natural person who cannot establish that such person is lawfully present in the United States. To establish lawful presence, a person must produce qualifying identification and sign a City-provided affidavit affirming the identification provided is genuine. This requirement will be imposed at the time of agreement award. This requirement does not apply to business organizations such as corporations, partnerships, or limited liability companies.

14.9 **NO BOYCOTT OF ISRAEL CERTIFICATION**

By Contractor's signature on this Agreement, Contractor certifies under A.R.S. § 35-393.01 that Contractor is not currently engaged in and for the duration of this Agreement will not engage in a boycott of Israel.

14.10 **NO THIRD PARTY BENEFICIARY**

Nothing under the Agreement Documents will be construed to give any rights or benefits in the Agreement Documents to anyone other than City and Contractor, and all duties and responsibilities undertaken pursuant to the Agreement Documents will be for the sole and exclusive benefit of City and Contractor and not for the benefit of any other party, unless otherwise expressly set forth in the Agreement Documents.

14.11 **GOVERNING LAW AND VENUE**

The Agreement and all Agreement Documents will be deemed to be made under, and will be construed in accordance with and governed by the laws of the State of Arizona without regard to the conflicts or choice of law provisions thereof. Any court action to enforce any provision of the Agreement or to obtain any remedy with respect hereto must be brought in the Superior Court, Maricopa County, Arizona, and for this purpose, each party hereby expressly and irrevocably consents to the jurisdiction and venue of such Court.

14.12 **SEVERABILITY**

If any provision of the Agreement Documents or the application thereof to any person or circumstance will be invalid, illegal or unenforceable to any extent, the remainder of the affected provision, the remainder of the Agreement Documents, and the application thereof will not be affected and will be enforceable to the fullest extent permitted by law.

14.13 **LEGAL REQUIREMENTS**

At all times relevant to its entry into this Agreement and performance of the Services and the Work, Contractor must fully comply with all Laws, Regulations, or Legal Requirements applicable to City, the Project, and the Agreement, including, without limitation, those set

Docusign Envelope ID: E6C32D3C-1F2C-430A-AE31-0184A77678E5

forth on Exhibit C of the Agreement.

14.14 **PARTIAL INVALIDITY**

If any provision of the Agreement is held by a court of competent jurisdiction to be invalid, void or unenforceable, the remaining provisions will nevertheless continue in full force without being impaired or invalidated in any way.

14.15 **ATTORNEYS' FEES**

Should either party to the Agreement bring an action to enforce any provision of the Agreement, the prevailing party will be entitled to recover reasonable attorneys' fees and costs in connection therewith.

14.16 **CONFLICT OF INTEREST**

14.16.1 Contractor agrees to disclose any financial or economic interest with the Project property, or any property affected by the Project, existing prior to the execution of the Agreement. Further, Contractor agrees to disclose any financial or economic interest with the Project property, or any property affected by the Project, if Contractor gains such interest during the course of this Agreement. If Contractor gains financial or economic interest in the Project during the course of this Agreement, this may be grounds for terminating this Agreement. Any decision to terminate the Agreement must be at the sole discretion of City.

14.16.2 Contractor will not engage the services on this Agreement of any present City employee who was involved as a decision maker in the selection or approval processes, or who negotiated or approved billings or Agreement Modifications for this Agreement.

14.16.3 Contractor agrees that it will not perform services on this Project for a contractor, subcontractor, or any supplier, not covered under this Agreement.

14.17 **INDEPENDENT CONTRACTOR**

Contractor is and must be an independent contractor. Any provisions in the Agreement Documents that may appear to give City the right to direct Contractor as to the details of accomplishing the Work or to exercise a measure of control over the Work means that Contractor must follow the wishes of City as the results of the Work only. These results must comply with all applicable laws and ordinances.

14.18 **NOTICE OF INJURY**

Should City or Contractor suffer injury or damage to their person or property because of any error, omission or act of the other party or of any of the other party's employees or agents or others for whose acts the other party is legally liable, claim must be made in writing to the other party within 7 Days of the first observance of such injury or damage.

14.19 **CONFIDENTIALITY**

Contractor, for the benefit of City, hereby agrees it will not release or cause or permit to be released to the public any press notices, publicity (oral or written) or advertising promotion relating to, any statement regarding, or any other public announcement or disclosure or cause or permit to be publicly announced or disclosed, in any manner whatsoever, the specific terms and conditions of this Agreement or any comment relating to the Project or the Site. Notwithstanding the foregoing, Contractor will be entitled to disclose the terms of the Agreement to the extent required by law or in the course of enforcing or defending a claim or action hereunder. Contractor must give City reasonably prompt notice of any disclosure or statement made pursuant to this provision.

Docusign Envelope ID: E6C32D3C-1F2C-430A-AE31-0184A77678E5

14.20 **DATA CONFIDENTIALITY**

14.20.1 As used in the Agreement, "data" means all information, whether written or verbal, including plans, specifications, renderings, photographs, studies, investigations, audits, analyses, samples, reports, calculations, internal memos, meeting minutes, data field notes, work product, proposals, correspondence and any other similar documents or information prepared by, obtained by, or transmitted to the City in the performance of this Agreement.

14.20.2 Contractor agrees that all data, regardless of form, including originals, images, and reproductions, prepared by, obtained by, or transmitted to City in connection with the Contractor's performance of this Agreement is confidential and proprietary information belonging to City.

14.20.3 Except as specifically provided in this Agreement, Contractor or its Subcontractors must not divulge data to any third party without prior written consent of City. Contractor or its Subcontractors must not use data for any purposes except to perform Work required under this Agreement. These prohibitions will not apply to the following data provided Contractor has first given the required notice to City:

a. Data which was known to Contractor or its Subcontractors prior to its performance under this Agreement unless such data was acquired in connection with Work performed for City;

b. Data which was acquired by Contractor or its Subcontractors in its performance under this Agreement and which was disclosed to Contractor or its Subcontractors by a third party, who to the best of Contractor's or its Subcontractor's knowledge and belief, had the legal right to make such disclosure and Contractor or its Subcontractors are not otherwise required to hold such data in confidence; or

c. Data which is required to be disclosed by virtue of law, regulation, or court order, to which the Contractor or its Subcontractors are subject.

14.20.4 In the event the Contractor or its Subcontractors are required or requested to disclose data to a third party, or any other information to which the Contractor or its Subcontractors became privy as a result of any other agreement with City, the Contractor must first notify City as set forth in this Section of the request or demand for the data. The Contractor or its Subcontractors must give City sufficient facts so that City can be given an opportunity to first give its consent or take such action that City may deem appropriate to protect such data or other information from disclosure.

14.20.5 Unless prohibited by law, within 10 Days after completion of services for a third party on real or personal property owned or leased by City, the Contractor must promptly deliver, as set forth in this Section, a copy of all data to City. All data will continue to be subject to the confidentiality agreements of this Agreement.

14.20.6 Contractor or its Subcontractors assume all liability for maintaining the confidentiality of the data in its possession and agree to compensate City if any of the provisions of this Section are violated by Contractor, its employees, agents, or Subcontractors. Solely for the purposes of seeking injunctive relief, it is agreed that a breach of this Section will be deemed to cause irreparable harm that justified injunctive relief in court. Contractor agrees that the requirements of this Section will be incorporated into all subcontracts entered into by Contractor. A violation of this Section may result in immediate termination of this

Docusign Envelope ID: E6C32D3C-1F2C-430A-AE31-0184A77678E5

Agreement without notice.

14.21 **SURVIVAL**

All warranties, representations and indemnifications by Contractor must survive the completion or termination of this Agreement.

14.22 **COVENANTS AGAINST CONTINGENT FEES**

Contractor warrants that no person has been employed or retained to solicit or secure this Agreement upon an agreement or understanding for a commission, percentage, brokerage, or contingent fee, and that no member of City Council, or any employee of City has any interest, financially, or otherwise, in the firm. For breach or violation of this warrant, City will have the right to annul the Agreement without liability or at its discretion to deduct from the Agreement Price or consideration, the full amount of such commission, percentage, brokerage, or contingent fee.

14.23 **NO WAIVER**

The failure of either party to enforce any of the provisions of the Agreement Documents or to require performance of the other party of any of the provisions hereof must not be construed to be a waiver of such provisions, nor will it affect the validity of the Agreement Documents or any part thereof, or the right of either party to thereafter enforce each and every provision.

14.24 **NONEXCLUSIVE REMEDIES**

The remedies set forth in this Agreement are cumulative and not exclusive, and failure to exercise any remedy (including, without limitation, any right to terminate) will not preclude any party from exercising any other right in seeking any other remedy available to it at law or in equity.

14.25 **PROJECT COMMUNICATIONS**

14.25.1 All communications concerning the performance of the Work or the Project will be provided to the designated Project Manager and Contractor's Representative set forth in Article 1 of the Agreement. City may change the designated Project Manager and, subject to Section 4.4.20 of these General Conditions, Contractor may change Contractor Representative, by written notice to the other.

14.25.2 Project communications may be exchanged by e-mail, but email communications cannot change the terms of the Agreement or the Scope of Work, or effectuate any change that requires a written Change Order.

14.25.3 When any provisions of the Agreement Documents requires Contractor or the Design Professional to give written notice to City, it will be deemed to have been validly given if delivered in person or if delivered at or sent by registered or certified mail, postage prepaid, to the Parties indicated in Agreement Article 1, incorporated by reference.

14.25.4 When any provisions of the Agreement Documents requires City, Project Manager, or the Design Professional to give written notice to Contractor, it will be deemed to have been validly given if delivered in person to the person designated in the Agreement Documents as Contractor's Resident Superintendent, or if delivered at or sent by registered or certified mail, postage prepaid, to Contractor at the last address in the Agreement Documents or such substitute address which Contractor designates in writing, or to the business address known to the giver of notice.

Docusign Envelope ID: E6C32D3C-1F2C-430A-AE31-0184A77678E5

14.26 **DRUG FREE WORKPLACE PROGRAM**

14.26.1 City has adopted a policy establishing a drug free workplace for itself and as a requirement for Contractors doing business with City, to ensure the safety and health of employees working on City projects.

14.26.2 Contractor must require a drug free workplace for all employees working under the Agreement. Specifically, all employees of Contractor who are working under an agreement with City must be notified, in writing, by Contractor that they are prohibited from the manufacture, distribution, dispensation, possession or unlawful use of a controlled substance in the workplace.

14.27 Failure to require a drug free workplace in accordance with the City's policy may result in termination of the Agreement and possible debarment form bidding on future City projects.

SECTION 15 - PROVISIONS APPLICABLE SOLELY TO GMP AND COST-BASED AGREEMENTS, CHANGE ORDERS, AND JOB ORDERS

15.1 **ADDITIONAL DEFINITIONS**

The definitions set forth in Section 2 apply to GMP and Cost-Based Agreements, Change Orders, and Job Orders, together with the additional definitions set forth below.

Baseline Cost Model –
A breakdown and estimate of the scope of the Project developed by CM@Risk pursuant to Section 17.5 of these General Conditions.

CM@Risk or Construction Manager at Risk –
The person or firm selected by City to provide pre-construction and/or construction services as detailed in a Construction Manager at Risk Agreement with City. In these General Conditions, the term "Contractor" includes CM@Risk under both Pre-Construction and Construction Services Agreements.

CM@Risk Fee or Contractor's Fee –
An agreed to percentage in an accepted GMP that represents the Contractor's fee for performance of the Work.

Agreement Documents –
Where compensation under the Agreement is based upon a GMP accepted by City, the term "Agreement Documents" also includes the accepted GMP Proposal.

Agreement Price –
Where compensation under the Agreement based upon a GMP accepted by City, the term "Agreement Price" refers to the GMP.

Cost-Based Agreement, Change Order, or Job Order –
A Agreement, Change Order, or Job Order where the Agreement Price is based upon the actual cost of performing the Work, subject to the terms of the Agreement Documents, including this Section 15. These would include those generally referred to as "Cost of the Work plus a Fee with a GMP," "Time and Materials," or "Cost Plus a Fee."

Cost of the Work –
The direct costs necessarily incurred by Contractor in the proper, timely, and complete performance on the Work. The Cost of the Work will include only those costs set forth in Section 15.2 of these

Docusign Envelope ID: E6C32D3C-1F2C-430A-AE31-0184A77678E5

General Conditions.

Deliverables –
The work products prepared by Contractor in performing the scope of work described in the Agreement. Some of the major deliverables to be prepared and provided by Contractor during pre-construction may include but are not limited to: the Baseline Cost Model and Schedule that validate City's plan and budget, Construction Management Plan, Detailed Project Schedule, Schedule of Values, alternative system evaluations, procurement strategies and plans, Detailed Cost Estimates, construction market surveys, cash flow projections, GMP Proposals, Subcontractor procurement plan, Subcontractor agreements, Subcontractor bid packages, Supplier agreements, Constructability Review, Cost Control Log, Traffic control and phasing plans and others as indicated in this Agreement or required by the Project Team.

Pre-Construction Services Agreement –
The Agreement entered into between City and the CM@Risk for Pre-Construction Services to be provided by the CM@Risk, including, without limitation, the generation of a GMP Proposal. If the GMP Proposal is accepted by City and a Construction Agreement is entered into between City and CM@Risk, the duties, obligations and warranties of the CM@Risk under the Pre-Construction Services Agreement survive and are incorporated into the resulting Construction Agreement.

Pre-Construction Services –
The services to be provided under the Pre-Construction Services Agreement, including Section 17 of these General Conditions.

Detailed Project Schedule –
The Detailed Project Schedule developed by the CM@Risk for the review and approval of the Project Manager in accordance with Section 17.3 of these General Conditions, if applicable.

General Conditions Costs –
Those costs set forth in Section 4 of Appendix 9 to these General Conditions.

GMP Plans and Specifications –
The plan and specifications upon which the Guaranteed Maximum price Proposal is based.

GMP Proposal –
The proposal of Contractor submitted pursuant to Section 17.7 of these General Conditions for the entire Work and/or portion (phases) of the Work.

Guaranteed Maximum Price or GMP –
The Guaranteed Maximum Price set forth in the Agreement, Change Order, or Job Order if applicable.

15.2 **AGREEMENT PRICE**

15.2.1 The Agreement Price for all Agreements, Change Orders, and Job Orders based upon payment of the Cost of the Work plus a Fee with a GMP, time and materials, or cost-plus a fee will be the Cost of the Work incurred plus the Fee agreed to in writing by City, limited to the amount of the GMP, if agreed to. Unless otherwise expressly provided in the Agreement, Change Order, or Job Order, all Cost Based pricing will be subject to and limited to GMP.

15.2.2 The Agreement Price may only be changed as set forth in Section 9 above.

Docusign Envelope ID: E6C32D3C-1F2C-430A-AE31-0184A77678E5

15.2.3 Only costs specifically designated as reimbursable costs are eligible for payment by City or may be charged against the Agreement Price. All other costs will not be paid by City and will not be chargeable against the Agreement Price.

15.2.4 Cost-Based Agreements. For Agreements, Change Orders, or Job Orders, reimbursable costs must be determined pursuant to Appendix 9 to these General Conditions, Cost of the Work, and not by MAG Specifications §109.5.

15.3 **ALLOWANCES**

15.3.1 Contractor must include in the Agreement Price all Allowances stated in the Agreement Documents and agreed to in writing by City. Items covered by these Allowances must be supplied for such amounts and by such persons as City may direct, provided Contractor will not be required to employ persons against whom Contractor makes a reasonable objection. Materials, labor, and equipment under an Allowance will be selected by City in accordance with a schedule to be mutually agreed upon by City, Design Professional and Contractor or otherwise in reasonably sufficient time to avoid delay in the Work.

15.3.2 Unless otherwise provided in the Agreement Documents:

15.3.2.1 These Allowances must cover the cost to Contractor, less any applicable trade discount, of the materials, labor, and equipment required by the Allowances, delivered at the Site, and all applicable taxes;

15.3.2.2 Contractor's costs for unloading and handling on the Site, labor, installation costs, overhead, profit and other expenses relating to materials, labor, and equipment required by the Allowance must be included in the Agreement Sum and not in the Allowance; and

15.3.2.3 Whenever the cost is more or less than the Allowance, the Agreement Sum must be adjusted accordingly by Change Order, the amount of which will recognize the difference between actual costs for an Allowance item and the amount of the Allowance item and changes, if any, in handling costs on the Site, labor, installation costs, overhead, profit and other expenses.

15.4 **CONTINGENCY**

An agreed to amount in the GMP that may only be used in accordance with the terms set forth in these General Conditions and with prior written approval by the City.

15.4.1 Construction Contingency. This GMP includes a dollar amount listed as a Construction Contingency which will be readily available for increased costs for subcontractors, material, and equipment subject to prior approval of City, which approval will not be withheld unreasonably. The Construction Contingency may also be used, at the discretion of City, to reimburse CM@Risk for unexpected costs due to (a) scope gaps between trade subcontractors; (b) agreement default by trade subcontractors; (c) unforeseen field conditions, but only as defined in Section 9.5 above; (d) work completed to meet the intent of the design, but which was not indicated on the plans; (e) costs overruns not covered by allowances; (f) costs of corrective work not provided for elsewhere; and (g) implementation of any Recovery Plan. Cost for which CM@Risk desires to be paid from the Construction Contingency must be documented by CM@Risk on a time and materials basis and are subject to verification by City. If agreed to by City, a "Use of Contingency" form will be executed by both parties authorizing the actual cost of the work to be paid and included in the Work Item Direct Costs. The Construction Contingency is not allocated to any particular

Docusign Envelope ID: E6C32D3C-1F2C-430A-AE31-0184A77678E5

item of the Project but may be used for any portion of the work as determined above. Any amount not used in the Construction Contingency will belong to City and will reduce the GMP.

15.4.2 Owner's Contingency. This GMP also includes a dollar amount listed as an Owner's Contingency which may be used only by the City (owner department) for upgrades and changes in scope or other changes not already included within the intent of the Project Program. City will provide CM@Risk with a Work Change Directive authorizing CM@Risk to perform the additional work and to transfer funds from the Owner's Contingency to the Work Item Direct Costs category to be paid with such direct costs. These additional costs will be in an amount mutually agreed upon by CM@Risk and City or will be documented by CM@Risk on a time and materials basis and are subject to verification by City. Any amount not used in the Owner's Contingency will belong to the City and will reduce the GMP.

15.5 **REDUCTION IN RETENTION**

If the Agreement Price is based upon a GMP, in order to receive payment of one-half of the retention as set forth in Section 8.1.5 above, Contractor must also submit to the Project Manager a complete accounting of the Actual Reimbursable Cost of the Work to date, including all such documentation (including, without limitation, invoices, subcontract, subcontractor change orders, purchase orders, records of payment, etc.) as City may require, to establish whether the payments made to Contractor equal, exceed, or are less than the actual reimbursable Cost of the Work to date. Any excess payments by City, as determined by the Project Manager, will be deducted from the one-half retention payment to be made to Contractor, and any additional excess amounts paid to Contractor will be refunded by Contractor to City. The Project Manager's determinations as to Actual Reimbursable Cost of the Work will be the basis of payment until final Project Closeout and Final Payment under the Agreement.

15.6 **FINAL PAYMENT**

If the Agreement Price is based upon a GMP, as a further condition precedent to Final Payment by City, Contractor must submit to the Project Manager a complete final accounting of the Actual Reimbursable Cost of the Work, including all such documentation (including, without limitation, invoices, subcontracts, subcontractor change orders, purchase orders, records of payment, etc.) as City may require, to establish whether the payments made to Contractor equal, exceed, or are less than the Actual Reimbursable Cost of the Work to date. Any excess payments by City, as determined by the Project Manager, will be deducted from the one-half retention payment to be made to Contractor, and any additional excess amounts paid to Contractor will be refunded by Contractor to City. Disputes relating to the Final Cost of the Work will be subject to City's audit rights under Sections 8.8 above and 15.7 below, and the dispute resolution process under Section 13 above.

15.7 **OPEN BOOK**

On any GMP-based or Cost-Based Agreement, Job Order, or Change Order, City may attend any and all meetings or discussions pertaining to the Project, including bid openings, and must have access to all books, invoices, accounts, memoranda, correspondence, and written communications or records of any kind pertaining to the Project, including without limitation, those stored in electronic format.

15.8 **DIFFERING SITE CONDITIONS AND/OR CHANGE IN LAWS**

A Change Order for increased costs under Section 9.5 or 9.6 above will only be considered

Docusign Envelope ID: E6C32D3C-1F2C-430A-AE31-0184A77678E5

or granted by City to the extent such actual, documented costs are justified.

SECTION 16 - PROVISIONS APPLICABLE SOLELY TO JOB ORDER AGREEMENTS (JOC)

16.1 **ADDITIONAL DEFINITIONS**

The definitions set forth in Sections 2 and below will apply to all Job Order Agreements and Job Orders. In addition, the definitions set forth in Section 15.1 above will apply to all Cost-Based Job Orders.

Agreement –
Includes the Job Order Master Agreement and Job Order Project Agreements issued and agreed to by City and JOC Contractor.

JOC Contractor's Coefficient –
A numerical factor that represents JOC Contractor total costs (indirect and direct costs, sales tax, profit, etc.) and other adjustments for market conditions.

Job Order Request for Proposal (RFP) –
The Request for Proposals issued by City for each Job Order Project Agreement relating to a specific Project.

Job Order Cost Proposal –
The Proposal submitted by JOC Contractor in response to a Job Order Request for Proposal (RFP) issued by City to develop a Job Order Project Agreement for a specific Project.

Guaranteed Maximum Price (GMP) Job Order –
Job Order under which JOC Contractor is compensated for actual costs incurred.

Job Order Project Agreement (Job Order) –
The agreement for a specific project, as it may be modified by all Change Orders, executed by the Parties, which incorporates the terms and conditions of the Job Order Master Agreement.

16.2 **ORDERING AND PROCESSING PROCEDURES FOR JOB ORDERS**

16.2.1 The process for developing and issuing a Job Order for a particular Project consists of three (3) procedures: (1) issuance of a RFP by City; (2) JOC Contractor's response to the RFP in the form of JOC Contractor's Job Order Cost Proposal; and (3) Issuance of a Job Order by City, as set for below.

16.2.2 RFP's For Job Orders

16.2.2.1 City will provide to JOC Contractor RFP with a Scope of Work (SOW) describing the Work to be performed, which may include special instructions and conditions, material submittal requirements, and, if applicable, a complete set of sketches, construction drawings and specifications for the Job Order.

16.2.2.2 Some Job Order RFP's will be issued by City without detailed sketches, drawing and specifications and will rely on JOC Contractor to produce them for City review and approval and is considered to be Pre-Construction and incidental design services included in JOC Contractor's overhead for GMP Job Orders. In addition JOC Contractor will not be reimbursed for any Pre-Job Order costs, including proposal preparation, attendance during negotiations, or site visits.

Docusign Envelope ID: E6C32D3C-1F2C-430A-AE31-0184A77678E5

16.2.3 JOC Contractor's Job Order Cost Proposal

16.2.3.1 JOC Contractor must respond within ten (10) calendar days of the RFP date or site visit, whichever is later or as otherwise indicated on a case-by-case basis, by submitting JOC Contractor's Job Order Cost Proposal to the City representative.

16.2.3.2 Unless otherwise required under the terms of the RFP, JOC Contractor's Job Order Cost Proposal must include the following.

a. JOC Contractor's Job Order Cost Proposal in PDF and electronic format;

b. A Project Schedule and schedule of values that reflects the costs of each work element on the schedule. The schedule must show all milestones (e.g., permits, submittals, ordering materials, demolition, work phases, closeout and completion date); and

c. Necessary documentation will be required to indicate that adequate scoping, layout, setup and planning to accomplish the Work has been done. Examples of documentation that might reasonably be expected include sketches, drawings, calculations, catalog cuts and specifications produced to a level of detail and skill that could be expected of experienced, competent Project Managers with five or more periods experience in their respective trade.

16.2.3.3 JOC Contractor must select Subcontractors based on qualifications alone or on a combination of qualifications and price and must not select Subcontractors based on price alone. A qualifications and price selection may be a one-step selection based on a combination of qualifications and price or two-step selection. In a two-step selection, the first step must be based on qualifications alone and the second step may be based or a combination of qualifications and price or on price alone.

16.2.3.4 Upon request, JOC Contractor must provide City with copies of Subcontractor quotes and the basis for selection of each Subcontractor.

16.2.3.5 If City objects to a selected Subcontractor, City will make the objection and the reasons for the objection known to the JOC Contractor. JOC Contractor must then present an acceptable Subcontractor for the applicable discipline. City will not unreasonably object to or withhold approval of a Subcontractor.

16.2.3.6 For self-performed work, the City retains the right to have the JOC Contractor establish JOC Contractor's costs by bidding their costs against at least three (3) other interested trade Contractors. No self- performed work will be allowed to be performed on a lump sum basis.

16.2.4 Issuance of Job Order

16.2.4.1 City Representative will compare the JOC Contractor's Job Order Cost Proposal with the City's estimate, schedules and other requirements, and then, if the City Representative determines it is in the best interest of City, arrange a meeting with JOC Contractor, at which time the JOC Contractor's Job Order Cost Proposal will be discussed and negotiated.

16.2.4.2 If the City Representative determines that it is in the best interest of the City, City will then issue a Job Order to JOC Contractor for execution.

16.2.4.3 Specific Job Orders may vary, but unless agreed to by City in writing otherwise, the content

Docusign Envelope ID: E6C32D3C-1F2C-430A-AE31-0184A77678E5

of Job Orders under the Agreement will generally be as follow, all of which will be signed and/or initialed by JOC Contractor's designated representative:

a. The description of the Scope of the Work and Project Schedule (attached as Exhibit A to the Job Order);

b. The address or location of the Work;

c. The Agreement Price for Work (Construction) included in the Project (attached as Exhibit B to the Job Order);

d. The name of the JOC Contractor representative for the Project;

e. The Drawings and Specifications for the Project;

f. If any shop drawings, project date and/or samples are required for the Job Order, the date for delivery of each required item (included in the Project Schedule, Exhibit A to the Job order); and

g. Project Specific Provisions, if any, in Exhibit A to the Job Order, including, without limitation, whether any of the following are required: Pre-Construction Conference, weekly progress meetings, field office, storage enclosure, materials and equipment handling facility, submittals, shop drawings, product data, equipment list, samples, project manual, schedule of values, Construction progress schedule, narrative reports, progress report, progress charts, progress photographs, materials status report, Construction diagram, Construction status report, operation and maintenance data, operating maintenance instructions and parts list, and as-build drawings.

16.2.5 Job Order Intent. Each Job Order will be interpreted to include all items reasonably necessary to complete the Project under that Job Order as described in the scope of the Work in that Job Order. All Work must be performed in a professional manner and all materials used must be new and of the highest quality and of the type best adapted to their purpose, unless otherwise specified. The Notice to Proceed date, and the award date established therein, will be deemed an integral part of the Job Order the same as if set forth therein.

16.3 **INCIDENTAL DESIGN SERVICES**

16.3.1 This effort includes all "extensions of design" for systems that are typically specified in a performance oriented manner by consultants and designers. Examples include: fire sprinkler systems, fire alarm and sprinkler systems, DDC controls, control systems, prefabricated metal building and similar situations. These designs are normally provided under submittals as a shop drawing with engineering backup and as appropriate, seals of registered engineers specializing in the particular system.

16.3.2 Incidental design includes all documents, sketches, schematic diagrams, floor plan layouts, equipment schedules and other documents produced by the JOC Contractor to define the work required for projects that the City does not develop formal or abbreviated designs requiring a seal by a registered engineer. Incidental design does not include preparation of designs requiring an architect or engineer seal.

16.3.3 JOC Contractor represents, covenants, and agrees, and contractually assumes the obligation to furnish, all of the required Design Services through properly licensed and

Docusign Envelope ID: E6C32D3C-1F2C-430A-AE31-0184A77678E5

experienced Design Professionals in complete accordance with all of the duties imposed on a Design Professional under the Agreement Documents, Laws, Regulations, or Legal Requirements, and the common law.

16.3.4 All Design Documents (and all other Project-related documents, models, computer drawings and other electronic expression, photographs and other expressions CADD, and BIM files and images included) that JOC Contractor and/or JOC Contractor's Design Professional(s) prepare in connection with a Job Order and the copyrights therein (collectively, the "Instruments of Service") will be the property of City. JOC Contractor covenants and agrees to execute any additional document reasonably requested by City to confirm such assignment without any additional compensation.

16.4 **CONSTRUCTION SERVICES**

16.4.1 The following subsections of this Section 16.4 set forth requirements beyond those set forth in Section 4 above which apply to Construction Services performed under a Job Order.

16.4.2 JOC Contractor must perform the Work using only those firms, team members and individuals designated by JOC Contractor consistent with each Job Order or otherwise approved by City pursuant to the General Conditions. No other entities or individuals may be used without the prior written approval of the Project Manager.

16.4.3 Construction Phasing

16.4.3.1 City use of the facilities is anticipated while the Work is being performed. The Work must be planned and accomplished so that there will be a minimum of interference and inconvenience to occupants in the building and agencies in the vicinity and to other craftsmen who may have to do work in the affected facilities. Any blockage of building exits or driveways must be coordinated in advance.

16.4.3.2 If applicable, furniture, portable office equipment and wall appurtenances not rigidly fastened to the walls must be moved by JOC Contractor, protected from damage and replaced to the original position upon completion of the work. If the work required by the Job Order will not allow furniture and portable office equipment to be replaced to its original position, new locations will be designated by City. Incidental costs associated with moving one-piece furnishings up to approximately 150 pounds to perform such tasks as painting, carpet or tile replacement, etc., are considered a general cost of building renovation and must be included in the JOC Contractor's Coefficient. Costs for large scale or wholesale removal and replacement of large quantities of desks or modular workstations, copiers, multiple full file cabinets, etc. to another location or storage outside the work space, or disassembly and reassembly of modular furniture is not considered part of the JOC Contractor's Coefficient and will be priced separately.

16.4.3.3 The work must, so far as practicable, be done in definite sections or divisions and confined to limited areas which must be completed before work in other sections or divisions are begun.

16.4.4 Work Site Conflicts. In the event of a conflict between JOC Contractor and others in an occupied facility or where other Contractors are performing work on the same facility under other Agreements, City will decide to dispute and that decision will be final.

16.4.5 Ownership of Work Product. Work Product prepared or otherwise created in connection

Docusign Envelope ID: E6C32D3C-1F2C-430A-AE31-0184A77678E5

with the performance of this Agreement, including the Work, are to be and remain the property of City. For purposes of this provision, "Work Product" will include all designs, drawings, plans, specifications, ideas, renderings and other information or matter, in whatever form created (e.g., electronic or printed) and in all media now known or hereinafter created. All Work Product will be considered Work Made for Hire as defined in the United States Copyright Act 17 U.S.C. §101 (Copyright Act). If for any reason any such Work is found not to be a work for hire, JOC Contractor hereby transfers and assigns ownership of the copyright in such Work to City. The rights in this Section are exclusive to City in perpetuity.

16.5 **OPTIONAL LIQUIDATED DAMAGES**

16.5.1 Specific Job Orders. City will have the right to assess liquidated damages in relation to any specific JOC Project Agreement as set forth below.

16.5.2 Substantial Completion Liquidated Damages. JOC Contractor acknowledges and agrees that if JOC Contractor fails to obtain Substantial Completion of the Work within the Agreement Time, City will sustain extensive damages and serious loss as a result of such failure. The exact amount of such damages will be extremely difficult to ascertain. Therefore, City and JOC Contractor agree that if JOC Contractor fails to achieve Substantial Completion of the Work within the Agreement Time, City will be entitled to retain or recover from JOC Contractor, as liquidated damages and not as a penalty, the sum per calendar day as indicated in MAG § 108.9.

16.5.3 Final Acceptance Liquidated Damages. For the same reasons set forth in Section 16.5.2 above, City and JOC Contractor further agree that if JOC Contractor fails to achieve Final Acceptance of the Work within the Agreement Time, City will be entitled to retain or recover from JOC Contractor, as liquidated damages and not as a penalty, the sum per calendar day as indicated in MAG § 108.9 commencing from the actual date of Substantial Completion or Final Acceptance as required under any specific JOC Project Agreement.

16.5.4 MAG Liquidated Damages. Liquidated damages provisions in MAG § 108.9 may apply to any specific JOC Project Agreement.

16.5.5 City may deduct liquidated damages assessed pursuant to this Section 16.5 from any unpaid amounts then or thereafter due JOC Contractor under the Agreement or any specific JOC Project Agreement between JOC Contractor and City. Any liquidated damages not so deducted from any unpaid amounts due JOC Contractor must be payable to City at the demand of City, together with interest from the date of the demand at the highest lawful rate of interest payable to JOC Contractor.

16.6 **PERFORMANCE MEASUREMENT**

16.6.1 Performance Assessment. After the Final Acceptance of Work under each Job Order, City will complete a written evaluation of the performance of JOC Contractor on the Job Order.

16.6.2 Consideration in Assignment of Work. JOC Contractor's record of cost, schedule and quality performance and comparative assessments will be significant considerations in City's determination whether to award future Job Orders. JOC Contractor agrees that any determination by City not to not award future Job Orders or Option periods based on performance will be at the sole discretion of City.

Docusign Envelope ID: E6C32D3C-1F2C-430A-AE31-0184A77678E5

SECTION 17 - PROVISIONS APPLICABLE SOLELY TO PRE-CONSTRUCTION SERVICES FOR CONSTRUCTION MANAGER AT RISK

17.1 ADDITIONAL DEFINITIONS

The definitions set forth in Section 2 and 15.1 above will apply to all Pre-Construction Services Agreements.

17.2 GENERAL

17.2.1 CM@Risk must perform the Services required by, and in accordance with the Agreement Documents and as outlined in Exhibit A of the Agreement to the satisfaction of the Project Manager, exercising the degree of care, skill, diligence and judgment a professional construction manager experienced in the performance of such services for construction and/or facilities of similar scope, function, size, quality, complexity and detail to the Project in urban areas throughout the United States, would exercise at such time, under similar conditions. CM@Risk must, at all times, perform the required services consistent with sound and generally accepted engineering principles and construction management and construction contracting practices.

17.2.2 As a participating member of the Project Team, CM@Risk must provide to City and Design Professional a written evaluation of City's Project Program and budget, each in terms of the other, with recommendations as to the appropriateness of each. CM@Risk must prepare a Baseline Cost Model that validates City's budget. The Baseline Cost Model must include all assumptions and basis of estimates in enough detail so that the Project Team can compare future detail estimates to the Baseline Cost model for variances. City and Design Professional will provide all the reasonably required data that is available in order to reach agreement between the team members that the Baseline Cost Model is an accurate projection of the costs of the Project.

17.2.3 CM@Risk must attend Project Team meetings, which may include, but are not limited to, bi- weekly Project management meetings, Project workshops, special Project meetings, construction document rolling reviews, public meetings and partnering sessions. CM@Risk attendance at design or other meetings in which CM@Risk is provided the opportunity but does not actively participate and/or is not properly prepared is not acceptable. Repeated instances of non-participation and/or lack of preparedness will be grounds for termination of CM@Risk Agreement for default.

17.2.4 CM@Risk must provide Pre-Construction Services, described herein, in a timely manner and consistent with the intent of the most current Drawings and Specifications. CM@Risk must promptly notify City in writing whenever CM@Risk determines any Drawings or Specifications are inappropriate for the Project and/or cause changes in the scope of Work that deviates more than the allowed contingencies within the Baseline Cost Model or requires an adjustment in the Baseline Cost Model, Detailed Cost Estimate, Detailed Project Schedule, GMP Proposals and/or in the Agreement Time for the Work, to the extent such as established.

17.2.5 CM@Risk when requested by City, must attend, make presentations and participate as may be appropriate in public agency and or community meetings, relevant to the Project. CM@Risk must provide drawings, schedule diagrams, budget charges and other materials describing the Project when their use is required or appropriate in any such public agency meetings.

Docusign Envelope ID: E6C32D3C-1F2C-430A-AE31-0184A77678E5

17.2.6 Ownership of Work Product. All Work Product prepared or otherwise created in connection with the performance of this Agreement, including the Work, are to be and remain the property of City. For purposes of this provision, "Work Product" will include all designs, drawings, plans, specifications, ideas, renderings and other information or material, in whatever form created (e.g., electronic or printed) and in all media now know or hereinafter created. All Work Product will be considered Work Made for Hire as defined in the United States Copyright Act 17 U.S.C.
§101 (Copyright Act). If for any reason any such Work is found not to be a work for hire, Contractor hereby transfers and assigns ownership of the copyright in such Work to City. The rights in this Section are exclusive to City in perpetuity.

17.2.7 CM@Risk represents to City in completing Pre-Construction Services and providing the reports and analysis required thereunder, that Work can be properly and timely constructed within the GMP Proposal, if accepted. CM@Risk does not assume any design responsibilities unless specifically called for in the scope of work, but CM@Risk will be responsible for their errors, omissions or inconsistencies included in the Work.

17.3 **DETAILED PROJECT SCHEDULE**

17.3.1 The fundamental purpose of the Detailed Project Schedule is to identify, coordinate and record the tasks and activities to be performed by all of the Project Team members and then for the Project Team to utilize that Deliverable as a basis for managing and monitoring all member's compliance with the schedule requirements of the Project. Each Project Team member is responsible for its compliance with the Detailed Project Schedule requirements. CM@Risk must, however, develop and maintain the Detailed Project Schedule on behalf of and to be used by the Project Team based on input from the other Project Team members. The Baseline Project Schedule must be developed as part of the Baseline Cost Model. The Detailed Project Schedule must use the Critical Path method ("CPM") technique, unless required otherwise, in writing by City. CM@Risk must use scheduling software acceptable to City to develop the Detailed Project Schedule. The Detailed Project Schedule must be presented in graphical and tabular reports as agreed upon by the Project Team. If Project phasing as described below is required, the Detailed Project Schedule must indicate milestone dates for the phases once determined. As part of construction phase, City may require CM@Risk to prepare a "resource loaded" schedule for all work, including work performed by Subcontractors, detailing each of the project tasks and the required/anticipated number of personnel per day for each task. CM@Risk must also indicate on the schedule its ability to meet said required/anticipated personnel requirements.

17.3.2 CM@Risk must include and integrate in the Detailed Project Schedule the services and activities required of City, Design Professional and CM@Risk including all construction phase activities based on the input received from City and the Design Professional. The Detailed Project Schedule must define activities as determined by City to the extent required to show: (a) the coordination between preliminary design and various pre-construction documents, (b) any separate long-lead procurements, (c) any permitting issues, (d) any land, right-of-way, or easement acquisition, (e) bid packaging strategy and awards to Subcontractors and Suppliers, (f) major stages of construction, (g) start-up and commissioning, and (h) occupancy of the completed Work by City. The Detailed Project Schedule must include by example and not limitation, proposed activity sequences and durations for design, procurement, construction and testing activities, milestone dates for actions and decisions by the Project Team, preparation and processing of shop drawings

Docusign Envelope ID: E6C32D3C-1F2C-430A-AE31-0184A77678E5

and samples, delivery of materials or equipment requiring long-lead time procurement (if any), milestone dates for various construction phases, Total Float for all activities to the extent authorized by City, relationships between the activities, City's occupancy requirements showing portions of the Project having occupancy priority, and proposed dates for Final Acceptance.

17.3.3 A Baseline Project Schedule must be initiated with the project Baseline Cost Model and agreed to by the project team at the same time. CM@Risk must update and maintain a detailed Project Schedule throughout pre-construction such that it will not require major changes at the start of the construction phase to incorporate CM@Risk's plan for the performance of the construction phase Work. CM@Risk must provide updates and/or revisions to the Detailed Project Schedule for use by the Project Team, whenever required, but no less often than at the Project Team meetings. CM@Risk must include with such submittals a narrative describing its analysis of the progress achieved to-date vs. the Baseline Project Schedule, including any concerns regarding delays or potential delays, and any recommendations regarding mitigating actions.

17.3.4 If phased construction is deemed appropriate at the time of developing the Baseline Cost Model or during the development of the Detailed Project Schedule, and City approves, CM@Risk must review the design and make recommendations regarding the phased issuance of Construction Documents to facilitate phased construction of the Work, with the objective of reducing the Project Schedule and/or Cost of the Work. CM@Risk must take into consideration such factors as natural and practical lines of work severability, sequencing effectiveness, access and availability constraints, total time for completion, construction market conditions, labor and materials availability, and any other factors pertinent to saving time and cost.

17.3.5 Long Lead Time Items. As part of developing the Detailed Project Schedule, CM@Risk must identify all long lead time materials, fabrications, equipment, or other items which may impact the Project Schedule and may require early action on the part of the Project Team. Dates for selecting and ordering long lead time items will be included and highlighted in the Detailed Project Schedule

17.3.6 Equipment Plan. Contractor must develop an Equipment Plan that addresses all rental and owned equipment, regardless of whether such equipment will be provided by CM@Risk or subcontractor(s), that will be necessary to construct the Project and the cost of which will be included as a Cost of the Work in the GMP Proposal. The Equipment Plan will seek to minimize the cost of the equipment to City and maximize the efficient and coordinated use of the equipment for completion of the Project. The Equipment Plan will not only include the costs and allowable lease rates for the equipment, but will also include an equipment schedule that will be incorporated into the Detailed Project Schedule and the Schedule of Values submitted with the GMP Proposal.

17.4 DESIGN DOCUMENT REVIEWS

17.4.1 CM@Risk must evaluate periodically the availability of labor, materials/equipment, cost-sensitive aspects of the design; and other factors that may create an unacceptable variance to the Baseline Cost Model and/or Baseline Project Schedule.

17.4.2 CM@Risk must recommend, in conjunction with the Project Team, those additional surface and subsurface investigations that, in its professional opinion, are required to provide the necessary information for CM@Risk to construct the Project. These additional

Docusign Envelope ID: E6C32D3C-1F2C-430A-AE31-0184A77678E5

investigations, if agreed to be necessary by the Project Manager and the Design Professional, will be acquired by City and copies of the reports will be provided to CM@Risk.

17.4.3 CM@Risk must meet with the Project Team as required to review designs during their development. CM@Risk must familiarize itself with the evolving documents through pre- construction. CM@Risk must proactively advise the Project Team and make recommendations on factors related to construction costs, and concerns pertaining to the feasibility and practicality of any proposed means and methods, selected materials, equipment and building systems, and, labor and material availability. CM@Risk must furthermore advise the Project Team on proposed site improvements, excavation and foundation considerations, as well as, concerns that exist with respect to coordination of the Drawings and Specifications. CM@Risk must use established value analysis principles in recommending cost effective alternatives.

17.4.4 CM@Risk must routinely conduct constructability and bid-ability reviews of the Drawings and Specifications as necessary to satisfy the needs of the Project Team. The reviews must attempt to identify all discrepancies and inconsistencies in the Construction Documents especially those related to clarity, consistency, completeness and coordination of Work of Subcontractors and Suppliers.

17.4.4.1 CM@Risk must evaluate whether: (a) the Drawings and Specifications are configured to enable efficient construction; (b) design elements are standardized; (c) construction efficiency is properly considered in the Drawings and Specifications; (d) module/preassembly design is prepared to facilitate fabrication, transport and installation; (e) sequences of Work required by or inferable from the Drawings and Specifications are practicable; (f) the design has taken into consideration efficiency issues concerning access and entrance to the site, laydown and storage of materials, staging of site facilities, construction parking, and other similar pertinent issues; and (g) the design maintains continued operation of the existing City systems and maintains traffic on adjacent roadways. CM@Risk must also review the Drawings and Specifications to ensure that what is depicted therein can be constructed as designed and must promptly inform the Project Team of any issues.

17.4.4.2 CM@Risk must check cross-reference and complementary Drawings and sections within the Specifications and in general evaluate whether: (a) the Drawings and Specifications are sufficiently clear and detailed to minimize ambiguity and to reduce scope interpretation discrepancies; (b) named materials and equipment are commercially available and are performing well, or otherwise, in similar installations; (c) Specifications include alternatives in the event a requirement cannot be met in the field; and (d) in its professional opinion, the Project is likely to be subject to Differing Site Conditions.

17.4.4.3 The results of the reviews must be provided to Project Team in formal, written reports clearly identifying all reviewed documents and the discovered discrepancies and inconsistencies in the Drawings and Specifications with notations and recommendations made on the Drawings, Specifications and other documents. CM@Risk must meet with Project Team to discuss any findings and review reports.

17.4.4.4 CM@Risk's reviews must be from a Contractor's perspective, and though it will serve to eliminate/reduce the number of RFIs) and changes during the construction phase, responsibility for the Drawings and Specifications will remain with the Design Professional and not CM@Risk.

Docusign Envelope ID: E6C32D3C-1F2C-430A-AE31-0184A77678E5

17.4.5 It is CM@Risk's responsibility to assist the Design Professional in ascertaining that, in CM@Risk's professional opinion, the Construction Documents are in accordance with applicable Laws, Regulations, or Legal Requirements, building codes, sound engineering principle's rules and regulations. If CM@Risk recognizes that portions of the Construction Documents are at variance with applicable laws, statutes, ordinances, building codes, sound engineering principle's rules and regulations, it must promptly notify the Project Team in writing, describing the apparent variance of deficiency. However, the Design Professional is ultimately responsible for the compliance of the Drawings and Specifications with those laws, statutes, ordinances, building codes, rules and regulations.

17.4.6 The Project Team will routinely identify and evaluate using value analysis principles and alternate systems, approaches, design changes that have the potential to reduce Project costs while still delivering a high quality and fully functional Project consistent with the Project Program. If the Project Team agrees, CM@Risk in cooperation with the Design Professional, will perform a cost/benefit analysis of the alternatives and submit such in writing to the Project Team. City, through the Project Manager, will direct which alternatives will be incorporated into the Project. The Design Professional will have full design responsibility for the review and incorporation of CM@Risk suggested alternatives into the Drawings and Specifications. CM@Risk must analyze the costs and schedule impacts of the alternatives against the Baseline Cost Model and Schedule and provide a recommendation for the Project Team's consideration and City's approval prior to the establishment of the GMP.

17.5 **BASELINE COSTS MODEL, DETAILED COST ESTIMATES, AND SCHEDULE OF VALUES**

17.5.1 At the conclusion of the Master Planning and Programming, if required, CM@Risk will review all available information regarding the design and scope of the Project using CM@Risk's experience in performing similar work, knowledge of similar projects and current and projected construction costs and, based upon that review, must develop a Baseline Cost Model for review by the Project Team and approval by City. Once approved by City, the Baseline Cost Model will be continually referenced as detailed estimates are created as the design progresses throughout Pre-Construction until the final GMP for the entire Project is established. A final GMP for the entire Project must be established and approved by City prior to the start of construction. It is the responsibility of CM@Risk to ensure City has sufficient information to evaluate and approve a final GMP prior to the time necessary to start construction so construction can be completed within the Agreement Time. The Project Detailed Cost Estimate will be the best representation from CM@Risk of what the complete functional Project's construction costs will be as indicated by the most current available documents and will be constantly checked against the Baseline Cost Model. CM@Risk must communicate to the Project Team and assumptions made in preparing the Baseline Cost Model. The Baseline Cost Model must support CM@Risk's Detailed Cost Estimates and may be broken down initially as dictated by the available information, as required by City.

17.5.2 After receipt of the Design Professional's most current documents from certain specified pre- construction milestones, CM@Risk must provide a draft Detailed Cost Estimate including a detailed written report detailing any variances to the Baseline Cost Model and Baseline Project Schedule. The Design Professional and CM@Risk will reconcile any disagreements on the estimate to arrive at an agreed upon Detailed Cost Estimate for the construction costs based on the scope of the Project through that specified pre-construction milestone. Pre-Construction milestones applicable to this paragraph are:

Docusign Envelope ID: E6C32D3C-1F2C-430A-AE31-0184A77678E5

Master Planning and Programming, Schematic Design, 50% Design Development, 100% Design Development, and 50% Construction Drawings, If no consensus is reached, City will make the final determination. If the Project Team requires additional updates of the Detailed Cost Estimate beyond that specified in this paragraph, CM@Risk must provide the requested information in a timely manner.

17.5.3 If at any point the Detailed Cost Estimate submitted to City exceeds the previously accepted Baseline Cost Model or previously approved Detailed Cost Estimate agreed to as set forth in Section 17.5.2 above, CM@Risk must make appropriate recommendations to project Team on means/methods, materials, and or other design elements that it believes will reduce the estimated construction costs, such that it is equal to or less than the established Project Team's Baseline Cost Model.

17.5.4 Unless other levels of completion are agreed to in writing in the Construction Documents, at 50% Construction Drawings and included with the associated report, CM@Risk must also submit to the Project Team for review and approval a Schedule of Values that complies with the following requirements. The Schedule of Values must be based on City standard bid schedule and highlight significant variances from any previously submitted Schedule of Values. The Schedule of Values must be directly related to the breakdowns reflected in the Detailed Project Schedule and CM@Risk's Detailed Cost Estimate. In addition, the Schedule of Values must: (a) detail unit prices and quantity take-offs, (b) detail all other contingencies and unit price Work shown and specified in the detailed design documents.

17.5.5 CM@Risk is to track, estimate/price and address the Project Team's overall project cost issues that arise outside of the Baseline Cost Model and the latest approved Detailed Cost Estimate such as: City generated changes, Project Team proposed changes, alternate system analysis, constructability items and value engineering analysis. The system used to implement this process will be referred to as the Design Evolution Log. This is to be addressed between the Baseline Cost Model and the Master Planning and Programming Detailed Cost Estimate, and then (unless other levels of completion are agreed to in writing in the Construction Documents) between the Detailed Cost Estimates for each of the pre-construction milestones thereafter, Schematic Design, 50% Design Development, 100% Design Development, and 50% Construction Documents, and the bid packages for all Phases.

17.5.6 Upon request by City, CM@Risk must submit to City a cash flow projection for the Project based on the current updated/revised Detailed Project Schedule and the anticipated level of payments for CM@Risk during the design and construction phases. In addition, if requested by City and based on information provided by City, CM@Risk must prepare a cash flow projection for the entire Project based on historical records for similar types of projects to assist City in the financing process.

17.5.7 Construction Water. CM@Risk must estimate the quantity of water to be used and include the cost thereof in each Detailed Cost Estimate and GMP Proposal provided by City.

17.6 **SUBCONTRACTOR AND MAJOR SUPPLIER SELECTIONS**

17.6.1 There are two ways to select Subcontractors and major Suppliers prior to submission of a GMP Proposal: (1) qualifications-based selection; or (2) a combination of qualifications and price. Except as noted below, the selection of Subcontractors/Suppliers is the sole responsibility of CM@Risk. In any case, CM@Risk is solely responsible for the performance of the selected Subcontractors/Suppliers, and for compliance with the requirements of

Docusign Envelope ID: E6C32D3C-1F2C-430A-AE31-0184A77678E5

Title 34 of the Arizona Revised Statutes in the selection of a Subcontractors/Suppliers, to the extent applicable. CM@Risk must comply with its Subcontractor Selection Plan submitted with its Statement of Qualifications.

17.6.2 City may approve the selection of a Subcontractor(s) or Suppliers(s) based only on their qualifications when CM@Risk can demonstrate it is in the best interest of the Project. All Work that is performed, after such a qualifications-based selection, for a price that is negotiated by CM@Risk will be billed in accordance with the GMP for actual costs and may be subject to audit by City.

17.6.2.1 Qualifications based selection of a Subcontractor(s)/Supplier(s) should only occur prior to the submittal of the GMP Proposal.

17.6.2.2 If a Subcontractor/Supplier selection plan was submitted and agreed to by City, CM@Risk must apply the plan in the evaluation of the qualifications of a Subcontractor(s) or Supplier(s) and provide City with its review and recommendations.

17.6.2.3 CM@Risk must receive written City approval for each selected Subcontractor(s) and Supplier(s).

17.6.2.4 CM@Risk must negotiate costs for services/supplies from each Subcontractor/Supplier selected under this method.

17.6.3 All Work must be competitively bid unless a Subcontractor or Supplier was selected pursuant to Section 17.6.2 above.

17.6.3.1 CM@Risk must develop Subcontractor and Supplier interest, submit the names of a minimum of three qualified Subcontractors or Suppliers for each trade in the Project for approval by City and solicit bids for the various Work categories. If there are not three qualified Subcontractors/Suppliers available for a specific trade or there are extenuating circumstances warranting such, CM@Risk may request approval by City to submit less than three names. Without prior written notice to City, no change in the recommended Subcontractors/Supplies will be allowed.

17.6.3.2 If City objects to any nominated Subcontractor/Supplier or to any self-performed Work for good reason, CM@Risk must nominate a substitute Subcontractor/Supplier that is acceptable to City.

17.6.3.3 CM@Risk must distribute Drawings and Specifications, and when appropriate, conduct a Pre- Bid Conference with prospective Subcontractors and Suppliers.

17.6.3.4 If CM@Risk desires to self-perform certain portions of the Work, it must request to be one of the approved Subcontractor bidders for those specific bid packages. CM@Risk's bid will be evaluated in accordance with the process identified below. If events warrant and City concurs that it is necessary in order to ensure compliance with the Project Schedule and/or the most recent Detailed Cost Estimate, CM@Risk may be authorized to self-perform Work without bidding or rebidding the Work. When CM@Risk self-performs work without bidding, only the actual costs associated with performing the Work in accordance with the approved GMP will be billed and may be subject to audit by City.

17.6.3.5 CM@Risk must receive, open, record and evaluate the bids; provided, however, that if CM@Risk or one of its affiliates is bidding to self-perform the Work that is the subject of the bid, then the bids must be received, opened, recorded and evaluated by Project Manager

Docusign Envelope ID: E6C32D3C-1F2C-430A-AE31-0184A77678E5

instead of CM@Risk. Bids for each category of Work must be opened and recorded at a pre-determined time. The apparent low bidders must be interviewed to determine the responsiveness of their proposals. In evaluating the responsiveness of bid proposals CM@Risk, in addition to bid price, may consider the following factors: past performance on similar projects, qualifications and experience of personnel assigned, quality management plan, approach or understanding of the Work to be performed, and performance schedule to complete the Work. The final evaluation of Subcontractor/Supplier bids must be done with Project Manager in attendance to observe and witness the process. CM@Risk must resolve any Subcontractor/Supplier bid withdrawal, protest or disqualification in connection with the award at no increase in the Cost of Work.

17.6.4 CM@Risk will be required to prepare two different reports on the subcontracting process.

17.6.4.1 Within fifteen days after each major Subcontractor/Supplier bid opening process; CM@Risk must prepare a report for City's review and approval identifying the recommended Subcontractors/Supplier for each category of Work. The report must detail: (a) the name of the recommended Subcontractor/Supplier and the amount of the Subcontractor/Supplier bid for each sub-agreement; (b) the sum of all recommended Subcontractor/Supplier bids received; (c) and trade work and its cost that CM@Risk intends to self-perform, if any.

17.6.4.2 Upon completion of the Subcontractor/Supplier bidding process, CM@Risk must submit a summary report to City of the entire Subcontractor/Supplier selection process. The report must indicate, by bid process, all Subcontractors/Suppliers contacted to determine interest, the Subcontractors/Suppliers solicited, the bids received and costs negotiated, and the recommended Subcontractors/Suppliers for each category of Work.

17.6.5 The approved Subcontractors/Suppliers will provide a Schedule of Values with their bid proposals, which will be used to create the overall Project Schedule of Values.

17.6.6 If after receipt of sub-bids or after award to Subcontractors and Suppliers, City objects to any nominated Subcontractor/Supplier or to any self-performed Work without any reasonable basis, CM@Risk must nominate a substitute Subcontractor or Supplier, preferably if such option is still available, from those who submitted Subcontractor bids for the Work affected. Once such substitute Subcontractors and Suppliers are consented to by City, CM@Risk's proposed GMP for the Work or portion thereof must be correspondingly adjusted to reflect any higher or lower costs form any such substitution.

17.7 **GMP PROPOSAL**

17.7.1 When a GMP Proposal is submitted for a phase of the Work, the GMP will have a Detailed Cost Estimate of the Costs of the Work (as set forth in Section 15.2) in each phase of the Work that is being proposed plus the current estimate for all other Work. City will not approve the GMP for the phase of work without a total estimate for the complete Project. City may request a GMP Proposal for all or any portion of the Project and at any time during pre-construction. Any GMP Proposals submitted by CM@Risk must be based on and consistent with Baseline Cost Model and the current update/revised Detailed Cost Estimate at the time of the request and include any clarifications or assumptions upon which the GMP Proposal(s) are based.

17.7.2 A GMP Proposal for the entire Project will be the sum of the Cost of the Work, CM@Risk Fee, and General Conditions Cost. CM@Risk guarantees to complete the Project at or less than

Docusign Envelope ID: E6C32D3C-1F2C-430A-AE31-0184A77678E5

the final GMP Proposal amount plus approved Change Orders. CM@Risk will be responsible for any costs for expenses that would cause the Cost of the Work actually incurred, including the Construction Fee and General Conditions Costs, to exceed the GMP.

17.7.3 CM@Risk must prepare its GMP Proposal in accordance with City's request for GMP Proposal requirements based on the most current completed Drawings and Specifications at that time, which unless otherwise directed by City in writing, will be at 100% Construction Drawings. CM@Risk must mark the face of each document of each set upon which its GMP Proposal is based. These documents must be identified as the GMP Plans and Specifications. CM@Risk must send one set of those documents to the Project Manager, keep one set and return the third set to the Design Professional.

17.7.4 An updated/revised Detailed Project Schedule, Equipment Plan, and Schedule of Values must be included in any GMP Proposal(s), all of which must reflect the GMP Plans and Specifications the Detailed Project Schedule must be shown in relationship to the Project Schedule and identify any variance to the Baseline Project Schedule. Any such Detailed Project Schedule updates/revisions must continue to comply with the requirements of Section 17.3.1 through 17.3.5.

17.7.5 <u>GMP Proposals(s) Review and Approval</u>

17.7.5.1 CM@Risk must meet with the Project Team to review the GMP Proposal(s) and the written statement of its basis. In the event the Project Team discovers inconsistencies or inaccuracies in the information presented, CM@Risk must make adjustments as necessary to the GMP Proposal.

17.7.5.2 If during the review and negotiation of GMP Proposals design changes are required, City may authorize and cause the Design Professional to revise the GMP Plans and Specifications to the extent necessary to reflect the agreed-upon assumptions and clarifications contained in the final approved GMP Proposal. Such revised GMP Plans and Specification will be furnished to CM@Risk. CM@Risk must promptly notify the Project Team in writing if any such revised GMP Plans and Specifications are inconsistent with the agreed upon assumptions and clarifications.

17.7.6 All portions of or items comprising the GMP Proposal are subject to audit by City, as deemed appropriate by City, including, without limitation, any based upon unit prices or Work to be self- performed by CM@Risk, or its affiliates.

17.8 **<u>PAYMENT PROCEDURE FOR PRE-CONSTRUCTION SERVICES</u>**

17.8.1 Requests for monthly payments by CM@Risk for Pre-Construction Services must be submitted monthly and must be accompanied by a progress report, detailed invoices and receipts, if applicable. Any requests for payment must include, as a minimum, a narrative description of the tasks accomplished during the billing period, a listing of any Deliverables submitted, and copies of any Subconsultants' requests for payment, plus similar narrative and listings of Deliverables associated with their Work. Payment for services negotiated as a lump sum will be made in accordance with the percentage of work completed during the preceding month.

17.8.2 In no event will City pay more than seventy-five (75%) of the Agreement Price until acceptance of ALL Pre-Construction Services and award of the final approved Construction Services Agreement for the entire Project by City Council. If CM@Risk does not prepare a

Docusign Envelope ID: E6C32D3C-1F2C-430A-AE31-0184A77678E5

GMP Proposal that is acceptable to City, or the GMP Proposal exceeds the City's Construction Budget, then CM@Risk understands and acknowledges that it will forfeit any right to receive the 25% of the Agreement Price being retained by City.

17.8.3 CM@Risk agrees that no charges or claims for costs or damages of any type will be made by it for any delays or hindrances beyond the reasonable control of City during the progress of any portion of Pre-Construction Services specified in this Agreement. Such delays or hindrances, if any, will be solely compensated for by an extension of time for such reasonable period and may be mutually agreed between the parties. It is understood and agreed, however, that permitting CM@Risk to proceed to complete any such Services, in whole or in part after the date to which the time of completion may have been extended, will in no way act as a waiver on the part of City of any of their respective legal rights herein.

17.8.4 No compensation to CM@Risk will be allowed contrary to Article I, Chapter I, Title 34 of the Arizona Revised Statutes.

17.8.5 If any service(s) executed by CM@Risk is abandoned or suspended in whole or in part, for a period of more than 180 days through no fault of CM@Risk, CM@Risk is to be paid for the services performed prior to the abandonment or suspension.

17.9 **SURVIVAL OF THE DESIGN SERVICES AGREEMENT, DUTIES, OBLIGATIONS AND WARRANTIES**

If the GMP Proposal is accepted by City and a Construction Agreement is entered into between City and CM@Risk, the duties, obligations and warranties of CM@Risk under the Pre- Construction Services Agreement survive and are incorporated into the resulting Construction Agreement.

Docusign Envelope ID: E6C32D3C-1F2C-430A-AE31-0184A77678E5

SECTION 15 – APPENDICES

The following Appendices attached hereto are referenced in the General Conditions and are incorporated herein.

Appendix 1 – Policy Statement for Calculating Delays and Damages
Appendix 2 – Cost Reduction Incentive Proposals for Design Bid Build Agreements
Appendix 3 – Contractor's Affidavit Regarding Settlement of Claims
Appendix 4 – Forms of Performance Bond
Appendix 5 – Forms of Payment Bond
Appendix 6 – Dispute Resolution
Appendix 7 – Certificate of Completion
Appendix 8 – Construction Sign Detail
Appendix 9 – Cost of the Work (Applicable solely to Construction Manager at Risk and Job Order Contracting)
Appendix 10 Landscape Establishment Period

Docusign Envelope ID: E6C32D3C-1F2C-430A-AE31-0184A77678E5

CALCULATING DELAYS AND DAMAGES

The purpose of this policy statement is to establish guidelines and procedures for negotiation between the Contractor and City of Chandler relating to compensation for delays pursuant to Arizona Revised Statutes (A.R.S.) 34-221(F). This policy statement contains notice requirements in addition to those set forth in the Agreement Documents, and will be the Agreement Provision contemplated by that statute.

NOTE: As used herein, the term "Engineer" will refer to the City of Chandler City Engineer or his/her designated representative. Nothing in this Policy Statement will be construed to void any provision in the Agreement which requires timely notice of delays or provides for arbitration or any other procedure for settlement or provides for liquidated damages.

I. TYPES OF DELAYS:

For the purposes of this document, there are essentially four types of delays encountered by City of Chandler Construction Contractors; excusable/compensable, excusable/non-compensable, non- excusable, and concurrent. Only delays that extend Agreement Completion Time set forth in the Agreement Document will be considered for issues relating to Agreement extensions or additional compensation. All other delays are considered to be activity delays and do not entitle the Contractor to either time extensions or additional compensation. Agreement Completion Time will be defined as the date set forth in Maricopa Association of Governments (MAG) Uniform Standard Specification Section 101 and as may be modified by the Agreement Documents.

A. Excusable/Compensable:

These are delays caused solely by the City's actions or inactions, are unreasonable under the circumstances, and which were not within the contemplation of the parties to the Agreement at or prior to the time of execution of the Agreement. Since the Contractor presumably has no control over the events causing the delay, he may be entitled to both Agreement time extensions and additional compensation for delay damages. Further, he/she may be entitled to additional compensation from the impact of that delay on other work. Examples of excusable/compensable (E/C) delays include: failure to properly locate an underground City-owned utility within 2 feet of the actual location; failure to relocate City-owned utilities far enough in advance of construction in an area where the Contractor is scheduled to work that it delays start or completion of the Contractor's regularly scheduled work; failure to provide City-furnished equipment or materials in a timely manner if required by the Agreement; failure to acquire necessary Right-of-Way or Public Utility Easements prior to the Contractor beginning Work in the area; failure to timely return Shop Drawings or other Agreement Submittals in accordance with the Agreement; unreasonable delay by the City in making decisions which affect critical activities; surveying errors when the City is contractually responsible for providing Project Surveying. This list is not meant to be all inclusive, but is intended merely as examples of the type of City action or inaction which can result in a Contractor's claim for additional time and compensation.

Docusign Envelope ID: E6C32D3C-1F2C-430A-AE31-0184A77678E5

B. Excusable/Non-compensable:

These are delays over which neither the City nor the Contractor had control. Since both parties to the Agreement have been potentially damaged by the delay, but neither have caused it, only Time Extensions are warranted. Examples of excusable, non-compensable (E/N) delays include: unusually severe weather; fire; acts of God; failure of non-City owned utilities (SRP, CenturyLink, Cable TV, Southern Pacific Railroad, and Southwest Gas, etc.) to properly or timely locate accurately; failure of non-City owned utilities to relocate in advance of construction; the voluntary or involuntary filing for Bankruptcy protection by a Supplier or Subcontractor which causes the Supplier/Subcontractor to fail to meet a contractual deadline provided the Contractor can provide documentation that he/she executed the required Purchase Orders/Subcontract Agreements and received delivery schedules which, if met, would have eliminated the delay; delays as a result of an incomplete shutdown of a City or non-City owned utility main (the City does not guarantee a complete shutdown). This list also is not necessarily all inclusive but merely indicative of type and class of E/N delays.

C. Non-excusable/Non-compensable:

These are delays caused by the actions or inactions of Contractor or an officer, employee, agent, Subcontractor, Supplier or any other party for whom the Contractor is responsible. Since the Contractor has assumed responsibility for the risks associated with the events that caused the delay, he/she are not entitled to either time extensions or monetary delay damages. All non-excusable delays are also non-compensable. Examples of non- excusable, non-compensable (N/N) delays include: failure to perform by the Contractor, its Subcontractors and/or Suppliers (except as noted in section I.B above); failure to provide adequate labor, materials, and/or equipment on the Project; failure to perform contractually-required coordination with utilities, agencies and other Contractors; failure to notify the Engineer, in writing, of delay impacts within two working days, as required by MAG 104.2.3, or the next work day, as required by MAG 109.8.2; failure to timely submit Shop Drawings; failure to pothole or otherwise visually locate utilities sufficiently ahead of the Work to allow the Engineer to direct corrective action when necessary; delays due to retesting of previously failed work, re-inspection, and/or restaking resulting from faulty workmanship, poor quality control, or lack of compliance with Agreement Specifications. Again, this list is not necessarily all inclusive.

D. Concurrent:

When two or more delays occur simultaneously or overlap, each delay is analyzed separately to determine its impact on the overall project completion date based on when that delay started. Once again, only those delays which actually extend the Agreement completion time are considered as delays. The concurrent delay is considered an additional delay only to the extent it prolongs the delay to the Agreement Completion Time beyond the date that the one it is concurrent with had already delayed that date. For example, if two delays are concurrent, and one is five days long and the second is seven days long, the second concurrent delay will only extend the Agreement Completion Time by two days. The same method of analysis is

Docusign Envelope ID: E6C32D3C-1F2C-430A-AE31-0184A77678E5

used when there are multiple concurrent delays. Only those extending the Project Completion Date are considered to be delays for the purposes of this policy. The portion of each concurrent delay that delays the completion of the work is classified in the same manner as described previously for individual delays and being either E/C, E/N or N/N.

An example of a concurrent delay is where the City delays furnishing material, but the Contractor could not have installed it anyway due to unusually severe weather. The effect of the first delaying activity will extend for the full duration and will be considered controlling on the Contractor's schedule. A subsequent, concurrent delay will thereafter only be considered to effect the project completion (if at all) once the first delaying activity has ceased to impact the project completion. In this case, if the unusually severe weather continued and delayed the work after the material was delivered, the first portion of the delay would be classified E/C (delay for material) and the second as E/N (delay due to unusually severe weather). Using the procedure set forth above, the entire concurrent portion would be considered E/C as shown in the chart which follows.

Example of a Concurrent Delay:

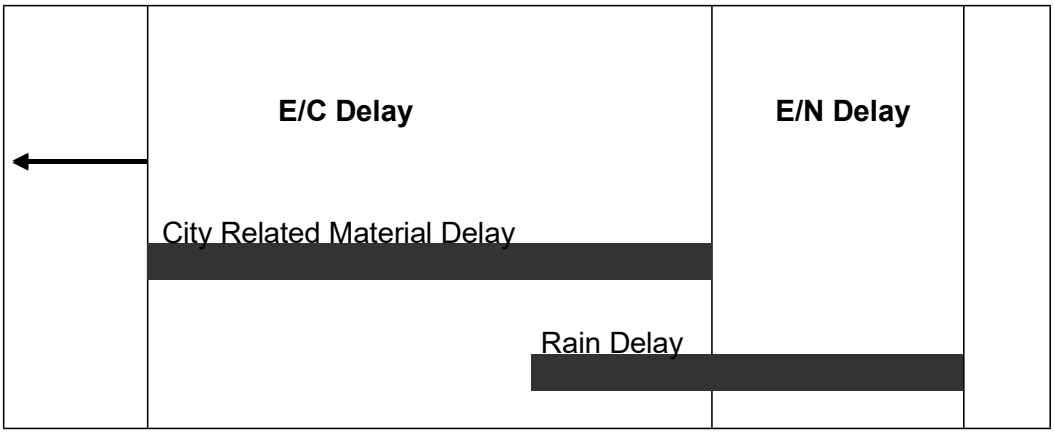

II. ANALYZING THE DELAY:

The Contractor must provide all documents required or requested by the Engineer to analyze the delay(s). It is important to understand that, prior to the delay analysis, delays and their impacts are alleged issues. The information the Contractor provides will be compared with the Inspector's Daily Log, Schedules and other available Project information and together they will support or refute that delays occurred and, if so, how they impact other work and the overall project completion. The Contractor's delay in providing these documents will be considered prima facie evidence that either the delay did not occur or it did not impact the Project Completion Date and any claim for time extension or damages will be denied.

The Engineer will accept delay analyses in CPM format, as these may demonstrate to his/her satisfaction whether or not Project Completion has been impacted by a specific event. If the Contractor chooses not to use CPM scheduling procedures, then the burden will be on the Contractor to prove to the Engineer's satisfaction that the Project Completion has been impacted. The procedures

Docusign Envelope ID: E6C32D3C-1F2C-430A-AE31-0184A77678E5

below assume that the Contractor is using CPM scheduling methods. As a minimum the Contractor must provide the following materials to the Engineer:

A. As-Planned Schedule. The initial construction schedule, required by the Agreement Documents, will be considered the baseline schedule. It is to the Contractor's advantage that the As-Planned (baseline) Schedule be as detailed as possible in order for delays, as they occur, to be incorporated into the schedule in representative locations. It is also to the Contractor's advantage to use a computer software program to generate the schedule since updated schedules are required monthly by the Agreement Documents and since updated schedules are required to support delays and requests for additional compensation for delays. The As-Planned (baseline) Schedule must be presented in network format which clearly shows the interrelationships of the activities. The Contractor must also provide a printout of the activities showing early start, early finish, late start, late finish, duration and float. The activity list printout must also indicate predecessor and successor activities.

B. As-Built Schedules. The as planned (baseline) schedule must be updated with complete progress-to-date information (actualized) up to the date of the start of the alleged delay. Each updated schedule will serve as the as-built schedule for analyzing the alleged delay and provide a new baseline as-planned schedule for the next delay. This process must be repeated for each alleged delay as it occurs. In updating the baseline schedule, the alleged delay must be treated as an activity and inserted into the schedule as a predecessor to the impacted activity (ies). When an activity that has already started is impacted, it is preferable to divide this activity into two parts and show the impact affecting the second part. For schedules which incorporate a time line (or data date), the delay activity must be inserted at the time it actually occurred. Some software scheduling programs have a PAUSE-RESUME feature that can be used to facilitate the requirements. The updated schedule must also be accompanied by a listing of activities as with the baseline schedule. This activities list must contain the alleged delay as an activity showing the duration and the activities which are predecessors and successors to it. When computer generated schedules are used, the Contractor must provide, in electronic media format, the complete data files for the updated schedule that included the delay activity, preferably either in Suretrak or in Microsoft Project. Each electronic media must contain a label identifying the Project name, Contractor's name, program name and version number, data date and project finish date.

C. Other Documents: In order to determine the amount of the alleged delay and if it is compensable, the Contractor must provide all backup documentation relevant to the issue and as required by the Engineer. This documentation must include copies of such items as: purchase orders; delivery schedules; correspondence; memoranda of telephone calls; force account daily worksheets (initialed by the Inspector); payroll data; estimating (bid) worksheets; and any other materials which may be requested by the Engineer.

D. Procedure: Only after receipt of sufficient documentation will the Engineer analyze each alleged delay and determine if it is supported or refuted. If supported, the Engineer will determine if it is excusable or non-excusable, compensable or non-

Docusign Envelope ID: E6C32D3C-1F2C-430A-AE31-0184A77678E5

compensable. If the Engineer determines that the delay did not affect the Project Completion, the as-planned schedule, which has been updated to the date of the alleged delay, must be revised to indicate this. If the Engineer determines the delay did occur but was N/N, then no time extension will be granted. It is imperative that an actualized schedule be submitted as soon as the occurrence of the alleged delay is known. In no event will the Contractor submit an actualized updated schedule later than 60 days after the occurrence of the alleged delay becomes known.

If the Engineer determines the delay did occur and was excusable but, due to a reason listed in section I.B. is non-compensable, he/she will determine the length of the E/N delay and prepare a Change Order to add that time to the Agreement. The Engineer's decision will be final.

If the Engineer determines the delay was excusable and compensable, he/she will determine the length of the E/C delay and proceed to review the Contractor's damage calculations in accordance with Section III. The Engineer will check the Contractor's calculations, review the backup documentation provided, and prepare a Change Order to cover both the additional compensation and the time extension. The Engineer's decision on both the time extension and additional compensation for the delay will be final.

If the issue involves a concurrent delay, the Engineer will analyze available data to determine the portions which are E/C, E/N, and/or N/N as described above. The Engineer will proceed to determine the length of E/C delay and verify the Contractor's delay damage calculations, if any are provided. Upon completion of this review, the Engineer will prepare a Change Order for the Contractor's review and signature. The Engineer's decision regarding excusable delay and additional compensation for the delay is final.

The amount of time the Engineer will require to analyze the alleged delay(s) will depend upon the Engineer's workload, the complexity of the delay analysis, availability of supporting data, extent of cooperation by the Contractor, and other factors beyond the Engineer's control. It is entirely possible other delay(s) may occur while the Engineer is analyzing particular claim for delay(s). The Engineer's failure to respond to the Contractor in a set period of time will not be used as the basis for a further delay claim or as justification for extending and existing delay claim. The time required for delay analysis by the Engineer will not be counted against the time allotted for processing Final Payment as required by (MAG Section 109.7(B)) or the release of retention and Final Payment as prescribed by A.R.S. Arizona Revised Statutes §34-221.

III. CALCULATING MONETARY DELAY DAMAGES:

Additional compensation for delay, when authorized by the Engineer, will be calculated in accordance with MAG Section 109.5 ACTUAL COST WORK with the following exceptions:

A. No additional compensation or other monetary damages will be awarded or paid for any loss of anticipated profits by the Contractor, Subcontractors or Suppliers.

Docusign Envelope ID: E6C32D3C-1F2C-430A-AE31-0184A77678E5

B. No additional compensation or other monetary damages will be awarded for home office overhead or non-project general conditions of the Contractor, Subcontractors or Suppliers.

C. Equipment:

1. Contractor-owned equipment rate calculations must be computed in accordance with Section 109.04(D)(3), Arizona Department of Transportation "Standard Specifications for Road and Bridge Construction," 2008 or latest edition and as modified herein. Year and regional adjustment factors must be based on the most recent publications of the Rental Rate Blue Book for Construction Equipment, published by the Equipment Guide-Book Company, San Jose, CA, same as provided by ADOT and in print as of the date of alleged delay. In no event will the compensation for Contractor-owned equipment exceed the purchase price, including tax, paid by the Contractor for the equipment. Compensation will not be allowed for small tools or equipment that show a daily equipment rental rate of less than $5.00 per day or for unlisted equipment that has a value of less than for hundred dollars ($400.00).
2. For leased and rented equipment or equipment not otherwise listed in the Blue Book, rental contracts, or other supporting data will be used to establish the hourly rate. No hourly operating expense will be allowed for delay on standby equipment. In no case will equipment be considered for rental which exceeds the hourly rate for the first eight hours and the daily rate divided by eight for all additional hours as compared with similar equipment listed in the Blue Book. The hourly standby rate must be computed as the lesser of:

    a. Dividing the monthly invoice or rental value by 176 hours per month when the equipment is utilized by the Contractor for more than three weeks;

    b. Dividing the monthly invoice or rental value by 40 hours per week when the equipment is utilized by the Contractor for more than three days.

    In no event will compensation be paid for delay at more than 8 hours per day or 40 hours per week.

3. Except for vehicles used by supervisory personnel, all equipment will be paid at the "standby" rate during the delay period.

4. Equipment brought solely to mitigate the delay (such as pumps, light plants, etc.) may be paid in accordance with ADOT section 109.04(D) (3).

5. The Blue Book regional adjustment will apply in determining rental rates.

D. Material:

Allowable material charges may include, in addition to material incorporated in the

Docusign Envelope ID: E6C32D3C-1F2C-430A-AE31-0184A77678E5

work material used to mitigate the delay such as barricades, plates, shoring, cold mix, etc. Except in emergencies the Contractor will not employ such material without the prior written approval of the Engineer.

E. Labor:

1. Except for Supervisory Personnel (Superintendent, Project Engineer, and Foremen), labor wages will not be paid after the first one-half day of claimed delay or impact. It is expected the Contractor will reassign or layoff unneeded employees.

2. For Foreman wages to be included, that Foreman must have been actively employed on the project prior to the commencement of the delay and be directly responsible for the activity being delayed.

3. Labor burden must be actual amounts incurred but must not exceed the ADOT approved rate.

F. All costs (equipment, material, and labor) must be substantiated by the City of Chandler's Daily Work Reports.

IV. DOCUMENT REQUIRED FOR CLAIM ANALYSIS:

For purposes of reviewing the Contractor's request for additional compensation, it will be required that the Contractor submit the following listed information. Information requested must be prepared on forms which are substantially similar to the City of Chandler's Daily Work Report form, a copy of which is attached as an exhibit.

A. Labor:

For each employee, laborer, and foreman, for which compensation is requested: Name, classification, dates of work performed, daily hours worked, total hours worked, labor rates, labor burden rates, overtime or premium time charges. Further, the Contractor must make available for inspection and copying to the Engineer the following listed documentation.

1. Certified payroll reports for the period of work claimed.
2. Accounting of Fringe Benefits – certified by a CPA.
3. Contractor's and Subcontractor's daily field reports and daily diaries.

B. Materials:

For all materials for which compensation is requested, if any, total quantities of materials, prices, extensions and transportation costs must be provided on a daily basis. Further, the Contractor must make available for inspection and copying to the Engineer the following listed documentation.

1. Invoices for all materials incorporated.
2. Weigh tickets.
3. Purchase orders.

Docusign Envelope ID: E6C32D3C-1F2C-430A-AE31-0184A77678E5

4. Delivery schedules.
5. Quotes or proposals from manufacturers or supplier.
6. Freight bills, Bills of Lading, or other documentation to show transportation costs.
7. Restocking charges-invoices from vendor.

C. Equipment:

For all equipment, the Contractor must provide the Engineer with the designation, dates and hours of usage, dates and hours of standby, if any, daily hours, total hours, rental rates and extension for each unit of equipment and machinery. Rental rates will be as established in Section III. Further, the Contractor must make available for inspection and copying to the Engineer the following listed documentation.

1. Owned:
   a. Purchase contracts(s).
   b. Depreciation schedule(s).
   c. Invoices for fuel, lube, repairs and other operating costs.

2. Leased:
   a. Lease agreement with hourly rate, overtime rate, double shift rate, etc.
   b. Invoices or other documentation showing hours worked on a daily basis.

D. Subcontractors/Owner-Operators:

In the event the Contractor submits a claim which includes requests for compensation for Subcontractors of Owner-Operators, the same information requested of the Contractor must be provided by the Subcontractor/Owner-Operator. Further, the Contractor must make available for inspection and copying to the Engineer the following listed documentation.

1. Bid/Estimate work sheets and/or spreadsheets.
2. Subcontract Agreements or Agreements with Owner-Operator.
3. All invoices and billing statements received from the Subcontractor/Owner-Operator which relates to the amount requested.

E. Miscellaneous:

Further, the Contractor must make available for inspection and copying to the Engineer the following listed documentation.

1. Evidence of payment for bonds and insurance premiums (MAG 109.5.6).
2. Taxes – unless the Contractor can show otherwise, taxes are reimbursable at 65% of the total cost (less bonds and insurance).

V. TIME LIMIT ON SUBMISSIONS OF CLAIM FOR DELAY OR IMPACT DAMAGES:

No claims for delay or impact damages will be considered or allowed more than 45 days after the event or occurrence which the Contractor claims gives rise to the delay or impact. In no event will a

Docusign Envelope ID: E6C32D3C-1F2C-430A-AE31-0184A77678E5

claim for delay or impact damages be considered after submission by the Contractor of the Final Payment Request.

Docusign Envelope ID: E6C32D3C-1F2C-430A-AE31-0184A77678E5

COST REDUCTION INCENTIVE PROPOSALS FOR DESIGN BID BUILD AGREEMENTS

The Contractor may submit to the Engineer proposals for modifying the Plans, Specifications, or other requirements of the Agreement for the sole purpose of reducing the total cost of Project construction. The proposals must not impair in any manner the essential functions or characteristics of the project; including but not limited to service life, economy of operations, ease of maintenance, desired appearance, compatibility with existing or planned equipment, standardization of systems, or design and safety standards.

It must not be inferred from this Policy that the Engineer is required to consider any proposal submitted.

Submissions that propose changes in the basic design of a bridge, propose changes in pipe line size, materials, bedding conditions, pipe specifications; or that propose any change in pavement design will not be considered.

Proposals submitted pursuant to this Policy will be identified as Cost Reduction Incentive Proposals. They must be submitted in writing and, at a minimum, contain the following.

1. Complete the attached or similar cost reduction incentive proposal form.

2. A description of both the existing Agreement Requirements for performing the work and the proposed changes.

3. All Engineering Drawings and computations necessary for the thorough and expeditious evaluation.

4. An itemization of the existing Agreement Requirements that must be changed if the Proposal is adopted and a recommendation as to the manner in which the change should be made.

5. A detailed estimate of the cost of performing the Work under the existing Agreement and under the proposed changes, including the cost of developing and implementing the changes.

6. The Agreement items affected by the proposed changes and any variations in quantities resulting from the changes.

7. An objective estimate of any effects the proposal will have on collateral cost to the City, costs of related items, and cost of maintenance and operation.

8. A statement as to the effect that the Proposal will have on the time for the completion of the Project.

9. A statement as to the time by which a Change Order adopting the Proposal must be executed or when the Engineer must have given verbal approval.

Docusign Envelope ID: E6C32D3C-1F2C-430A-AE31-0184A77678E5

Proposals will be processed expeditiously; however, the City will not be liable for any delay in acting upon any Proposal nor for any failure to accept any Proposal pursuant to this Special Provision.

The Engineer will be the sole judge of the acceptability of a Proposal and of the estimated net savings in construction costs from the adoption of all or any part of the Proposal. The Contractor will be notified in writing by the Engineer as to whether his/her Proposal has been accepted. The decision by the Engineer is final.

When the City deems such action to be appropriate, it reserves the right to require the Contractor to share equally in the cost to the City of investigating, evaluating, and processing the proposal as a condition for the consideration of such Proposal. Such cost must be shared whether the Proposal is accepted or rejected. When such a condition is imposed, the City will estimate these costs and the Contractor must indicate his acceptance thereof in writing. Such acceptance will authorize the City to deduct the Contractor's share of the costs from any monies due or that may become due to the Contractor under the Agreement.

If the Contractor's Proposal is accepted in whole or in part, the necessary Agreement Modifications and Agreement Price Adjustments will be affected by the execution of a Change Order which will specifically state that it is executed pursuant to this Special Provision.

The Contractor must continue to perform the work in accordance with the requirements of the Agreement until a Change Order incorporating the Proposal has been executed or until he/she has been given verbal approval by the Engineer that his/her Proposal has been accepted. If the Change Order has not been executed or he/she has not been given verbal approval on or before the date specified on the attached cost reduction incentive proposal form or on or before such other date as the Contractor may have subsequently specified in writing, the Proposal may be deemed to be rejected.

The executed Change Order will incorporate the changes in the Plans, Specifications, or other requirements of the Agreement which are necessary to permit the Proposal, or such part of it which has been accepted, to be put into effect, and will include any condition – upon which the City's approval thereof is based, if such approval is conditional. The executed Change Order may also extend the time for the completion of the Agreement if such an extension has been deemed to be warranted by the Engineer as a result of his evaluation of the Proposal.

The executed Change Order will also establish the estimated net savings in the cost of performing the Work attributable to the Proposal effectuated by the Change Order. In determining the net savings, the right is reserved to the Engineer to disregard the Agreement bid prices if, in his/her judgment, such prices do not represent a fair measure of the value of the Work to be performed or to be deleted. The net savings will be established by determining the Contractor's cost of performing the Work, taking into account his/her cost of developing the Proposal and implementing the change, and reducing this amount by any ascertainable collateral costs to the City. The executed Change Order may provide that the Contractor be paid 50 percent of the estimated net savings amount.

The executed Change Order may also provide for the adjustment in Agreement prices. Agreement prices may be adjusted by subtracting the City's share of the accrued net savings.

The amount specified to be paid to the Contractor in the executed Change Order which effectuates a Cost Reduction Proposal will constitute full compensation to the Contractor for the Cost Reduction

Docusign Envelope ID: E6C32D3C-1F2C-430A-AE31-0184A77678E5

Proposal and the performance of the work thereof pursuant to the said Change Order.

Upon acceptance of a Cost Reduction Incentive Proposal, any restrictions imposed by the Contractor on its use or on disclosure of the information will become void, and the City thereafter will have the right to use all or any part of the Proposal without obligation or compensation of any kind to the Contractor.

Docusign Envelope ID: E6C32D3C-1F2C-430A-AE31-0184A77678E5

COST REDUCTION INCENTIVE PROPOSAL FORM

TO: CIP City Engineer

FROM:

PROJECT NAME: **Forensic Services Facility**

CITY PROJECT NUMBER: **PD2301.251**

DATE:

Summary of Change (Brief description of proposed change including advantages and disadvantages):

ESTIMATED COST SUMMARY (Attached detailed estimate):

A.	Original Cost:	$
B.	Proposed Cost:	$ _____
C.	Construction Savings (A-B):	$ _____
D.	Gross Savings (Included OH %, Bond %)	$ _____
E.	Contractor Implementing	$_____
F.	City Implementing Cost:	$_____
	Reduction in Agreement Price (C+D-E-F) x 50%:	$ _____

Date by which a Change Order must be issued so as to obtain maximum cost reduction:

Docusign Envelope ID: E6C32D3C-1F2C-430A-AE31-0184A77678E5

CITY OF CHANDLER, ARIZONA
PUBLIC WORKS & UTILITIES DEPARTMENT

CONTRACTOR'S AFFIDAVIT REGARDING SETTLEMENT OF CLAIMS

_____, Arizona
Date _____

Project Name: Forensic Services Facility
City Project No.: PD2301.251

To the City of Chandler, Arizona

Gentlemen:

This is to certify that all lawful claims for materials, rental of equipment and labor used in connection with the construction of the above project, whether by subcontractor or claimant in person, have been duly discharged.

The undersigned, for the total compensation of $_____, as set out in the final pay application, as full and complete payment under the terms of the Agreement, hereby waives and relinquishes any and all further claims or right of lien under, in connection with, or as a result of the above described project. The undersigned further agrees to indemnify and save harmless the City of Chandler against any and all liens, claims or liens, suits, actions, damages, charges and expenses whatsoever, which said City may suffer arising out of the failure of the undersigned to pay for all labor performances and materials furnished for the performance of said installation.

Signed and dated at _____, this _____ day of _____ 20_____.

_____
CONTRACTOR

By _____

STATE OF ARIZONA)
) SS
COUNTY OF MARICOPA)

The foregoing instrument was subscribed and sworn to before me this _____ day of _____ 20 _____.

_____
Notary Public

_____
My Commission Expires

Docusign Envelope ID: E6C32D3C-1F2C-430A-AE31-0184A77678E5

PERFORMANCE BOND

ARIZONA STATUTORY PERFORMANCE BOND
PURSUANT TO TITLES 28, 34, AND 41, ARIZONA REVISED STATUTES
(Penalty of this bond must be 100% of the Agreement amount)

KNOW ALL MEN BY THESE PRESENTS THAT:_____

(hereinafter "Principal"), and _____ (hereinafter "Surety"), a corporation organized and existing under the laws of the State of _____ with its principal office in the City of _____, holding a certificate of authority to transact surety business in Arizona issued by the Director of Insurance pursuant to Title 20, Chapter 2, Article 1, as Surety, are held and firmly bound unto _____(hereinafter "Obligee") in the amount of _____ (Dollars) ($_____), for the payment whereof, Principal and Surety bind themselves, and their heirs, administrators, executors, successors and assigns, jointly and severally, firmly by these presents.

WHEREAS, the Principal has entered into a certain written Agreement with the Obligee, dated

the _____ day of _____, 20___ for construction of **Forensic Services Facility, PD2301.251** which Agreement is hereby referred to and made a part hereof as fully and to the same extent as if copies at length herein.

NOW, THEREFORE, THE CONDITION OF THIS OBLIGATION IS SUCH, that if the Principal faithfully performs and fulfills all the undertakings, covenants, terms, and conditions of the Agreement during the original term of the Agreement and any extension of the Agreement, with or without notice of the Surety, and during the life of any guaranty required under the Agreement, and also performs and fulfills all the undertakings, covenants, terms, conditions, and agreements of all duly authorized modifications of the Agreement that may hereafter be made, notice of which modifications to the Surety being hereby waived, the above obligation is void. Otherwise it remains in full force and effect.

PROVIDED, HOWEVER that this bond is executed pursuant to the provisions of Title 34, Chapter 2, Article 2, Arizona Revised Statutes, and all liabilities on this bond will be determined in accordance with the provisions of Title 34, Chapter 2, Article 2, Arizona Revised Statutes, to the same extent as if it were copied at length in this Agreement.

The prevailing party in a suit on this bond may recover as part of the judgment reasonable attorney fees that may be fixed by a judge of the court.

Witness our hands this _____ day of _____, 20__.

_____
PRINCIPAL SEAL

_____
AGENT OF RECORD

By _____

_____
SURETY SEAL

_____
AGENT ADDRESS

Docusign Envelope ID: E6C32D3C-1F2C-430A-AE31-0184A77678E5

PAYMENT BOND

ARIZONA STATUTORY PAYMENT BOND
PURSUANT TO TITLES 28, 34, AND 41, OF THE ARIZONA REVISED STATUTES
(Penalty of this Bond must be 100% of the Agreement amount)

KNOW ALL MEN BY THESE PRESENTS THAT:_____

(hereinafter "Principal"), as Principal, and _____(hereinafter "Surety"), a corporation organized and existing under the laws of the State of _____ with its principal office in the City of _____, holding a certificate of authority to transact surety business in Arizona issued by the Director of the Department of Insurance pursuant to Title 20, Chapter 2, Article 1, as Surety, are held and firmly bound unto _____ (hereinafter "Obligee") in the amount of _____ (Dollars) ($_____), for the payment whereof, the Principal and Surety bind themselves, and their heirs, administrators, executors, successors and assigns, jointly and severally, firmly by these presents.

WHEREAS, the Principal has entered into a certain written Agreement with the Obligee, dated the _____ day of _____, 20___ for construction of **Forensic Services Facility, PD2301.251** which Agreement is hereby referred to and made a part hereof as fully and to the same extent as if copied at length herein.

NOW, THEREFORE, THE CONDITION OF THIS OBLIGATION IS SUCH, that if the Principal promptly pays all moneys due to all persons supplying labor or materials to the Principal or the Principal's subcontractors in the prosecution of the work provided for in said Agreement, this obligation is void. Otherwise it remains in full force and effect.

PROVIDED, HOWEVER that this bond is executed pursuant to the provisions of Title 34, Chapter 2, Article 2 Arizona Revised Statutes, and all liabilities on this bond will be determined in accordance with the provisions, conditions and limitations of Title 34, Chapter 2, Article 2, Arizona Revised Statutes, to the same extent as if it were copied at length in this Agreement.

The prevailing party in a suit on this bond may recover as part of the judgment reasonable attorney fees that may be fixed by a judge of the court.

Witness our hands this _____ day of _____, 20__.

_____
PRINCIPAL SEAL

_____
AGENT OF RECORD

By _____

_____
SURETY SEAL

_____
AGENT ADDRESS

Docusign Envelope ID: E6C32D3C-1F2C-430A-AE31-0184A77678E5

DISPUTE RESOLUTION

A. INFORMAL DISPUTE RESOLUTION

The parties to the Agreement agree that time is of the essence in relation to performance of the Agreement and completion of the Project, therefore any and all disputes in relation to the Agreement will initially be referred to the Project Manager, the Design Professional Representative and/or the Contractor Representative as applicable to the dispute, for immediate resolution. If, after good faith efforts to reach a resolution, none is reached, any party to the dispute may submit the dispute to the Dispute Resolution Representative ("DRR") process set forth below, which is intended to be an expedited process.

B. DISPUTE RESOLUTION REPRESENTATIVE ("DRR") PROCESS

1. The Parties under the Agreement agree that all claims and disputes in relation to the Project which are not resolved in the ordinary course of the Project ("Claim" or "Claims") will, as a prerequisite to any mediation, or litigation of the Claim, first be submitted for resolution between the designated Dispute Resolution Representatives of the Parties as set forth herein (the "DRR Process").

2. The DRR Process will be initiated through service of a DRR Notice as set forth below:

   a. For claims by the Contractor or the Design Professional, the DRR Process will be initiated by the party asserting the claim serving written notice on the City setting forth in detail: (i) the basis for the claim; (ii) the effect of the Claim upon the construction of, and/or Project Schedule for, the Project;
   (iii) the specific relief requested, the amount thereof, and how such was calculated; (iv) the parties involved in the Claim, and how they are involved; (v) the specific Agreement provisions in the Agreement Documents (including, if applicable, drawings and specifications) which apply; and (vi) efforts made to date to resolve the Claim.

   b. For claims by the City, the DRR process will be initiated by the City providing written notice to the other parties of the basis and amount of its claim, the parties involved in the Claim, and how they are involved, the provisions in the Agreement Documents that apply, and the relief requested.

   c. The DRR Notice will be hand-delivered and e-mailed to the other parties' designated Dispute Resolution Representatives.

3. The other parties will respond in writing to the DRR Notice ("DRR Response") within ten (10) calendar days of receipt of the DRR Notice, setting forth those items set forth in the DRR Notice that they agree with, dispute, and/or have questions concerning. The DRR Response will be hand-delivered and e-mailed to the other parties' Dispute Resolution Representatives.

Docusign Envelope ID: E6C32D3C-1F2C-430A-AE31-0184A77678E5

4. The designated Dispute Resolution Representatives for the Parties to the claim will then meet as soon as possible and in any event within twenty (20) calendar days of submission of the DRR Notice (regardless of whether a DRR Response has been submitted by all parties involved in the dispute), at a mutually agreed upon time and place, to attempt to resolve the Claim based upon the DRR Notice and DRR Response.

5. At any time after the first meeting required above, either party may terminate the DRR Process by written notice to the other party.

6. The parties may agree, in writing, to extend or modify the time limits or other provisions of the DRR process in relation to a specific pending Claim.

7. Unless otherwise designated in a written notice to the other parties, the City and the representatives of the Contractor and of the Design Professional will act as the parties' designated Dispute Resolution Representatives.

8. If a resolution of the Claim is reached, that resolution must be set forth in writing and must be signed by the Parties' designated Dispute Resolution Representative. If the resolution involves a change in any Agreement Documents, the Agreement Price, the Project Schedule, or any other change requiring a written Change Order or Amendment, the parties must execute an appropriate written Change Order or Amendment pursuant to the terms of the Agreement Documents.

C. MEDIATION

1. Unless extended by written agreement of the parties involved in the dispute, any Claim not resolved through the DRR process set forth above within five (5) calendar days after the meeting required under B (4) above, or after the DRR is terminated pursuant to B (5) above, whichever is earlier, will be submitted to mediation as a condition precedent to litigation by either party.

2. The mediation will be commenced by written demand upon the other party for mediation. If the parties cannot agree upon a mediator within ten (10) calendar days of the written demand, either party may make a request to the Civil Presiding Judge of the Maricopa County Superior Court to appoint a mediator. The mediation will occur within forth (40) calendar days of the written demand for mediation, unless the parties agree, in writing, to a longer period of time.

3. The qualifications for the mediator will be that he/she be: (a) an experienced mediator, arbitrator or litigator of construction disputes; and (b) having engaged a significant portion of his/her time involving and/or resolving construction disputes for at least the past five (5) years.

4. Each party will provide to the other party and the mediator all of the information and documentation required under B(1) and (2) above, together with any additional information and documentation which the party believes relevant. In addition, the parties will exchange, and provide to the mediator such additional memoranda, information and/or documentation, as the

Docusign Envelope ID: E6C32D3C-1F2C-430A-AE31-0184A77678E5

mediator may request, and in the form and at such times, as the mediator may direct.

5. The parties will share the mediator's fee and any filing fees equally. The mediation will be held in Chandler, Arizona, unless another location is mutually agreed upon. Agreements reached in mediation will be specifically enforceable in any court having jurisdiction thereof.

D. LITIGATION

Any claim arising out of or related to the Agreement, except Claims relating to aesthetic effect and except those claims waived as provided for in the Agreement Documents, must be resolved through litigation in the Maricopa County, Arizona Superior Court.

Docusign Envelope ID: E6C32D3C-1F2C-430A-AE31-0184A77678E5

Chandler · Arizona

CITY OF CHANDLER, ARIZONA
PUBLIC WORKS & UTILITIES DEPARTMENT

CERTIFICATE OF COMPLETION

PROJECT NAME:	**Forensic Services Facility**		
CITY PROJECT NO.:	**PD2301.251**		
If Federally Funded:			
FEDERAL NO.:		**ADOT NO:**	

(*This section to be completed by Prime*)
I HEREBY CERTIFY THAT ALL GOODS AND/OR SERVICES REQUIRED BY CITY OF CHANDLER FOR THIS PROJECT HAVE BEEN DELIVERED IN ACCORDANCE WITH THE AGREEMENT DOCUMENTS AND BID SPECIFICATIONS AND ALL ACTIVITIES REQUIRED BY THE AGREEMENTOR UNDER THE AGREEMENT HAVE BEEN COMPLETED AS OF THE COMPLETION DATE LISTED HERE:

FINAL ACCEPTANCE DATE:	

PRIME CONTRACTOR:

FIRM NAME:			
PRINCIPAL:			
TITLE:			
SIGNATURE:		DATE:	

CERTIFIED BY [*INSERT NAME AND TITLE OF PARTY THAT OVERSEES CONSTRUCTION*]:

FIRM NAME:			
SIGNATURE:		DATE:	

PROJECT ACCEPTED BY CITY OF CHANDLER:

NAME:			
SIGNATURE:		DATE:	

Docusign Envelope ID: E6C32D3C-1F2C-430A-AE31-0184A77678E5

CONSTRUCTION SIGN DETAIL

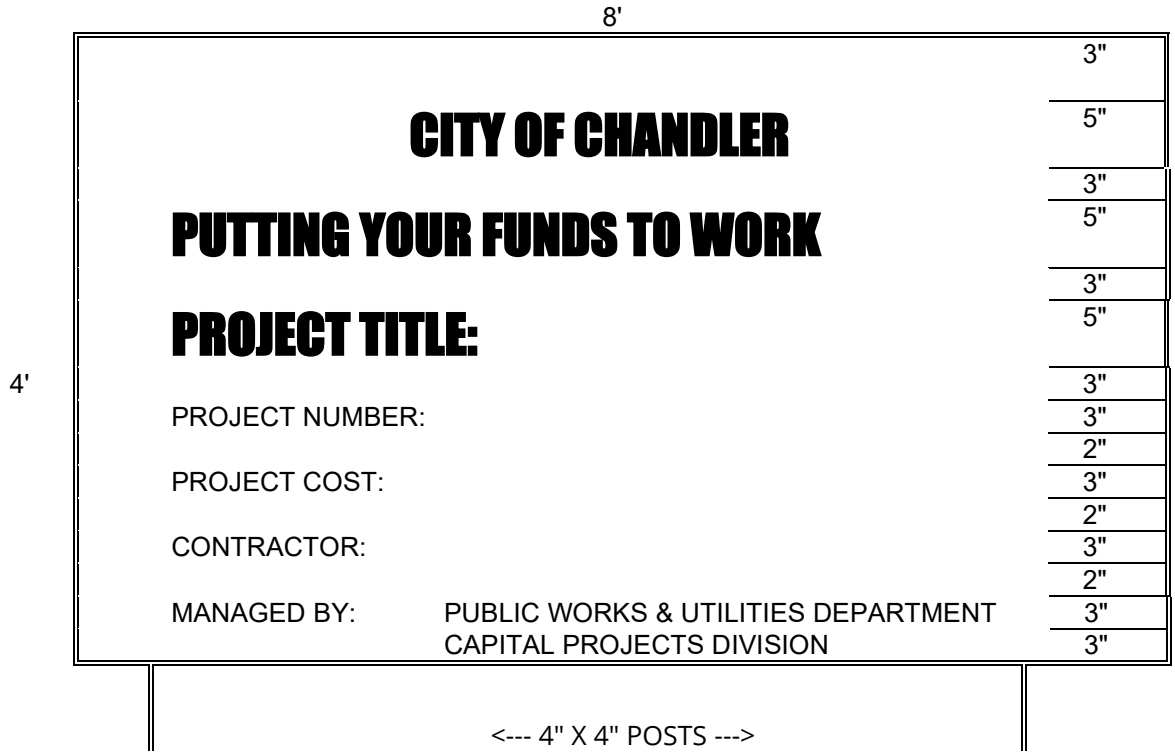

NOTES:

SIGN(S) MUST BE FURNISHED AND ERECTED PRIOR TO COMMENCEMENT OF CONSTRUCTION. POSTS MUST BE ANCHORED A MINIMUM OF TWO FEET INTO THE GROUND. BOTTOM OF SIGN MUST BE A MINIMUM OF FOUR FEET ABOVE THE GROUND.

TYPICAL PROJECT IDENTIFICATION SIGN FOR GENERAL PROJECTS MUST BE NON-REFLECTORIZED GREEN BACKGROUND, AND NON-REFLECTORIZED WHITE LETTERS AND NUMERALS.

ONE SIGN MUST BE ERECTED FOR BUILDINGS AND OTHER LIMITED AREA SINGLE SITES. FOR MULTIPLE SITES, ONE SIGN MUST BE ERECTED AT EACH SITE.

FOR LINEAR PROJECTS ONE HALF MILE OR LONGER, PLACE ONE SIGN AT EACH END OF THE PROJECT.

Docusign Envelope ID: E6C32D3C-1F2C-430A-AE31-0184A77678E5

COST OF THE WORK

(APPLICABLE SOLELY TO CONSTRUCTION MANAGER AT RISK AND JOB ORDER CONTRACTING)

SECTION 1 – COSTS TO BE REIMBURSED

1.1 Cost of the Work

The term Cost of the Work will mean costs necessarily incurred by Contractor in the proper performance of the Work. Such costs must be at rates not higher than the standard paid at the place of the Project except with prior consent of City. The Cost of the Work will include only the items set forth in this Section 1.

1.2 Labor Costs

1.2.1 Wages of construction workers directly employed by the Contractor to perform the construction of the Work at the site or, with City's approval, at off-site workshops. Cost to be reimbursed will be the actual wages paid to the individuals performing the work.

1.2.2 Wages or salaries of the Contractor's supervisory and administrative personnel when stationed at the site with City's approval. No Contractor personnel stationed at the Contractor's home or branch offices will be charged to the Cost of the Work. Non-field office based Contractor management and support personnel are expected to provide service and advice from time to time throughout the job and his/her time devoted to Project matters is considered to be covered by the Contractor's Fee.

1.2.3 Wages and salaries of Contractor's supervisory or administrative personnel who would normally be stationed at the field office in accordance with Section 1.2.2 but who become engaged, at factories, workshops or on the road, in expediting the production or transportation of materials or equipment required for the Work, but only for that portion of his/her time required for the Work. Employee bonuses and/or costs associated with Employee Stock Ownership Plans ("ESOP") will not be considered reimbursable labor or labor burden costs and will be considered non-reimbursable costs considered to be covered by the Contractor's Fee.

1.2.4 Costs paid or incurred by Contractor for taxes, insurance, contributions, assessments and benefits required by law or collective bargaining agreements and, for personnel not covered by such agreements, customary benefits such as sick leave, medical and health benefits, holiday, vacations and pensions, provided such costs are based on wages and salaries included in the Cost of the Work under Subparagraphs 1.2.1 through 1.2.3.

1.2.4.1 Cost of the Work will include the actual net cost to Contractor for worker's compensation insurance attributable to the wages chargeable to the Cost of Work per this Agreement. The actual net cost of worker's compensation must take into consideration all cost adjustments due to experience modifiers, premium discounts, policy dividends, retrospective rating plan premium adjustments, assigned risk pool rebates, any applicable weekly maximums, etc. Contractor may charge an estimated amount for worker's compensation insurance costs, but will make appropriate cost adjustments to actual costs within 45 days of receipt of actual cost adjustments from the insurance carrier.

Docusign Envelope ID: E6C32D3C-1F2C-430A-AE31-0184A77678E5

1.2.4.3 Overtime wages paid to salaried personnel (if approved in advance in writing by City) will be reimbursed at the actual rate of overtime pay paid to the individual. No time charges for overtime hours worked on the Project will be allowed if the individual is not paid for the overtime worked.

1.2.4.4 Any overtime premium or shift differential expense to be incurred by Contractor for hourly workers will require City's advance written approval before the incremental cost of the overtime premium or shift differential will be considered a reimbursable cost. If the Contractor is required to work overtime as a result of an inexcusable delay or other coordination problems caused by the Contractor or anyone he/she is responsible for, the overtime premium and/or shift differential expense portion of the payroll expense and related labor burden costs will be considered as cost not to be reimbursed.

1.2.4.5 Reimbursable labor burden costs will be limited to payroll taxes, worker's compensation insurance, the employer's portion of union benefit costs for union employees working on the Project, and the actual verifiable fringe benefit costs incurred by Contractor for non-union individuals working on the Project subject to the following maximum percentages for the following reimbursable non-union fringe benefit costs. The following maximums (as a percentage of reimbursable actual wages by individual) will apply for each of the following types of fringe benefit costs specifically attributable to each of the non-union personnel working on the Project:

- Medical Insurance, Dental, Life & AD&D Insurance: 12.00%
- Holiday, vacation and other paid time not worked: 10.00%
- Pension Plan Contributions to Vested Employee Account, Simplified Employee Pension Plans, or 401K matching plans (Note: ESOP related costs are covered by the Contractor Fee) 10.00%

For non-union personnel, no other fringe benefit costs (other than the three specific categories listed immediately above, will be considered reimbursable Cost of Work. Any labor burden costs that are in excess of the amounts considered reimbursable or are otherwise not considered reimbursable under the terms of this agreement are intended to be covered by the Contractor Fee.

1.3 Subcontract Costs

1.3.1 Payments made by Contractor to Subcontractors in accordance with the requirements of the subcontracts.

1.3.2 For Scope of Work Bid Packages typically performed by Subcontractors, Contractor may "self- perform" such work on an actual cost basis subject to an agreed upon Guaranteed Maximum Price for the "self-performed work". The Contractor must, unless agreed to by City in writing, bid his/her proposed guaranteed Maximum Price for the work to be "self-performed" against at least three other interested trade Contractors. All savings under any such Subcontract for "self-performed work" must be applied to reduce the Cost of Work under the Agreement and the Guaranteed Maximum Price. For purposes of defining "self-performed work" subject to this provision, any division of Contractor, or any separate Contractor or Subcontractor that is partially owned or wholly owned by the Contractor or any of his/her employees or employee's relatives will be considered a related party entity and will be subject to this provision regarding "self-performed work". No self-performed work will

Docusign Envelope ID: E6C32D3C-1F2C-430A-AE31-0184A77678E5

be allowed to be performed on a Fixed Price basis.

1.3.3 Contractor (with respect to its Suppliers, Subcontractors and all lower tier Subcontractors) must provide City advance written notice and must obtain City's approval for any proposed Subcontract Change Order, Material Purchase Order, or other financial commitment in an amount in excess of $5,000 prior to placing such order or entering into such agreement (regardless of whether or not any such commitment will affect the prime Agreement Guaranteed Maximum Cost). It is agreed that sums applicable to any Subcontract Change Order, Purchase Order or other financial commitment entered into in violation of the above notice and approval requirement will not be included in the amounts owning to Contractor, Subcontractors or Suppliers whether as Costs of the Work or as reasonable termination costs in the event of termination.

1.4 Costs of Material and Equipment Incorporated in the Completed Construction

1.4.1 Costs, including transportation and storage, of materials and equipment incorporated or to be incorporated in the completed construction.

1.4.2 Costs of materials described in the preceding Subparagraph 1.4.1 in excess of those actually installed to allow for reasonable waste and spoilage. Unused excess materials, in any, will become City's property at the completion of the Work or, at City's option, may be sold by the Contractor. Any amounts realized from such sales must be credited to City as a deduction from the Cost of Work.

1.4.3 Proceeds from the sale of recyclable materials, scrap, waste, etc. will be credited to job cost.

1.5 Costs of Other materials and Equipment, Temporary Facilities and Related Items

1.5.1 Costs, including transportation and storage, installation, maintenance, dismantling and removal of materials, supplies, temporary facilities, machinery, equipment and hand tools not customarily owned by construction workers, that are provided by the Contractor at the site and fully consumed in the performance of the Work; and cost (less salvage value) of such items if not fully consumed, whether sold to others or retained by Contractor. Cost for items previously used by Contractor will mean fair market value.

1.5.2 Rental charges for temporary facilities, machinery, equipment, and hand tools not customarily owned by construction workers that are provided by Contractor at the site, whether rented from Contractor or others, and costs of transportation, installation, minor repairs and replacements, dismantling and removal thereof. Rates and quantities of equipment rented will be subject to City's prior written approval.

1.5.2.1 The Projected usage for each piece of equipment to be rented for use on the Project and the estimated total rentals must be considered by Contractor before the piece of equipment is rented so that an appropriate rent versus buy decision can be made. Purchased equipment must be considered "job owned". At the completion of the Project, Contractor must transfer title and possession of all remaining job-owned equipment to City, or Contractor may keep any such equipment for an appropriate fair market value credit to job cost, which will be mutually agreed to by City and Contractor.

1.5.2.2 Each piece of equipment to be rented must have hourly, daily, weekly and monthly rates and

Docusign Envelope ID: E6C32D3C-1F2C-430A-AE31-0184A77678E5

the most economical rate available will be reimbursed based on the circumstances of actual need and usage of the piece of equipment while it is stationed at the jobsite. When the piece of equipment is no longer needed for the work, no rental charges will be reimbursed if the piece of equipment remains at the jobsite for the convenience of Contractor.

1.5.2.3 Equipment Rental Rates

1.5.2.3.1 Compensation for equipment used on the Project will be paid in accordance with the Equipment Plan submitted by Contractor in the accepted GMP Proposal and no payments will be made in excess of the rates set forth in the Equipment Plan, or actual documented costs, whichever is less.

1.5.2.3.2 All equipment rental rates and costs are subject to City's right to audit when submitted as part of Equipment Plan and/or at any time during the Project.

1.5.2.4 The aggregate rentals chargeable for each piece of Contractor owned tools or equipment must not exceed 50% of the fair market value of such equipment at the time of its commitment to the Work. The original purchase price and date of purchase of the equipment will be documented with a copy of the purchase invoice for the piece of equipment. Such aggregate limitations will apply and no further rentals will be charged even if a piece of equipment is taken off the job and is later replaced by a similar piece of equipment. For purposes of computing the aggregate rentals applicable to aggregate rental limitations, rental charges for similar pieces of equipment will be combined if the pieces of equipment were not used at the same time.

1.5.2.5 Fair market value for used material and equipment as referred to in the Agreement Documents will mean the estimated price a reasonable purchaser would pay to purchase the used material or equipment at the time it was initially needed for the job. Note: This is usually lower than the price a reasonable purchaser would pay for similar new construction material or construction equipment.

1.5.2.6 All losses resulting from lost, damaged or stolen tools and equipment will be the sole responsibility of Contractor, and not City, and the cost of such losses will not be reimbursable under the Agreement.

1.5.2.7 Contractor will be required to maintain a detailed equipment inventory of all job-owned equipment (either purchased and charged to job cost or job-owned through aggregate rentals) and such inventory must be submitted to City each month. For each piece of equipment, such inventory should contain at a minimum (1) original purchase price or acquisition cost (2) acquisition date (3) approved Fair Market Value at the time the piece of equipment was first used on the job and (4) final disposition.

1.5.2.8 All costs incurred for minor maintenance and repairs will be reimbursed at actual cost. Such costs include routine and preventative maintenance, minor repairs and other incidental costs. Repairs and/or replacement of a capital nature are considered to be covered by the rental rates. Major repairs and overhauls are not considered routine and ordinary; consequently such costs are not reimbursable and are intended to be covered by the rental rates.

1.5.3 Costs of removal of debris from the Site.

Docusign Envelope ID: E6C32D3C-1F2C-430A-AE31-0184A77678E5

1.5.4 Costs of document reproductions, facsimile transmissions and long-distance telephone calls, postage and parcel delivery charges, telephone service at the site and reasonable petty cash expenses of the site office.

1.5.5 That portion of the reasonable expenses of Contractor's personnel incurred while traveling in discharge of duties connected with the Work.

1.5.5.1 No travel expenses will be reimbursed to Contractor's representatives unless Project related travel required them to travel to a destination more than 100 miles from the Project location. Any travel involving airfare will require advance written approval by an authorized City's representative.

1.5.6 Costs of materials and equipment suitably stored off the site at a mutually acceptable location, if approved in advance by the City.

1.5.7 Reproduction costs will be the actual costs of reproduction subject to a maximum of five cents ($.05) per square foot for prints and a maximum of five cents ($.05) per 8 ½ by 11-inch page for offset print or photo copied agreement documents, specifications, etc. Telephone costs will be the actual costs paid to the third party telephone company for the field office telephone.

1.6 Miscellaneous Costs

1.6.1 That portion of insurance and bond premiums that can be directly attributed to the Agreement. The City will reimburse Contractor for contractually required bond at time of first pay application for GMP and Cost-Based Agreements upon receipt of proof of payment from the Contractor. If the Contractor completes Work for less than the Agreement Price, Contractor must credit the City a pro- rated amount for the unused portion of the bond payment

1.6.1.1 Contractor's actual cost for insurance will be considered to be included within the Maximum limit for General Conditions Costs. All premiums for any insurance and bonds required for the Project must reflect the net actual costs to Contractor after taking into consideration cost adjustments due to experience modifiers, premium discounts, policy dividends, retrospective rating plan premium adjustments, assigned risk pool rebates, refunds, etc.

1.6.1.2 The amount to be reimbursed to Contractor for all contractually required insurance will be actual costs not to exceed a total of 2% of the Agreement Value, unless Contractor establishes to City's satisfaction that the actual cost is higher and City agrees to such actual higher cost in writing. If Contractor's cost of contractually required insurance is greater than the amount agreed to be reimbursed per this Agreement Provision, the difference will be considered to be covered by the Contractor's Fee. The City will reimburse Contractor for contractually required insurance on a monthly basis for GMP and Cost-Based Agreements. If Contractor can demonstrate substantial savings by paying for all insurance in advance, the City may agree to reimburse all insurance costs at time of first pay application for GMP and Cost-Based Agreements with proof of payment from Contractor.

1.6.2 Sales, use or similar taxes imposed by a governmental authority that are related to the Work.

Docusign Envelope ID: E6C32D3C-1F2C-430A-AE31-0184A77678E5

1.6.3 Fees and assessments for the building permit and for other permits, licenses and inspections for which Contractor is required by the Agreement Documents to pay.

1.6.4 Fees of laboratories for tests required by the Agreement Documents, except those related to defective or nonconforming Work and which do not fall within the scope of ¶ 1.7.3 below.

1.6.5 Royalties and license fees paid for the use of a particular design, process or product required by the Agreement Documents; the cost of defending suites or claims for infringement of patent rights arising from such requirement of the Agreement Documents; and payments made in accordance with legal judgments against Contractor resulting from such suites or claims and payments of settlements made with City's consent. However, such costs of legal defenses, judgments and settlements must not be included in the calculation of the Contractor's Fee or subject to the Guaranteed Maximum Price.

1.6.6 Data processing costs related to the Work. However, any such data processing costs will be limited to the cost of personal computer hardware used at the field office in the normal day to day administration, management and control of the Project. The aggregate charges for any such hardware must not exceed the Fair Market Value of the hardware at the time it was brought to the field office. If the total charges for any particular piece of hardware reach an amount equal to the Fair Market Value, that particular piece of hardware must be turned over to City whenever it is no longer needed for the Project. If Contractor elects to keep the particular piece of hardware, the job costs must be credited with a mutually agreeable amount which will represent the Fair Market Value of the particular piece of hardware at the time it was no longer needed for the job. Software or other costs associated with the use of computer programs will not be considered to be a reimbursable cost and will be considered to be covered by the Contractor's Fee.

1.6.7 Deposits lost for causes other than Contractor's negligence or failure to fulfill a specific responsibility to City as set forth in the Agreement Documents.

1.6.8 Legal, mediation and arbitration costs, including attorneys' fees, other than those arising from disputes between City and Contractor, reasonably incurred by Contractor in the performance of the Work and with City's prior written approval; which approval will not be unreasonably withheld.

1.6.9 Expenses incurred in accordance with Contractor's standard personnel policy for relocation and temporary living allowances of personnel required for the Work, if pre-approved by City in writing. If City authorizes the reimbursement of relocation costs, the reimbursable relocation expenses will be limited to a maximum of $50,000 per person. Any relocation cost incurred by Contractor in excess of the amount reimbursed by City will be considered to be covered by the Contractor's Fee.

1.7 Other Costs and Emergencies

1.7.1 Other costs incurred in the performance of the Work if and to the extent approved in advance in writing by City.

1.7.2 Costs due to emergencies incurred in taking action to prevent threatened damage, injury or

Docusign Envelope ID: E6C32D3C-1F2C-430A-AE31-0184A77678E5

loss in case of an emergency affecting the safety of persons and property.

1.7.3 Costs of repairing or correcting damaged or nonconforming Work executed by Contractor, Subcontractors or Suppliers, provided that such damaged or nonconforming Work was not caused by negligence or failure to fulfill a specific responsibility of Contractor and only to the extent that the cost of repair or correction is not recoverable by Contractor from insurance, sureties, Subcontractors or Suppliers.

1.8 Related Party Transactions

1.8.1 The term "related party" will mean a parent, subsidiary, affiliate or other entity having common ownership or management with Contractor; any entity in which any stockholder in, or management employee of, Contractor owns any interest in excess of ten percent in the aggregate; or any person or entity which has the right to control the business or affairs of Contractor. The term "related party" includes any member of the immediate family of any person identified above.

1.8.2 If any of the costs to be reimbursed arise from a transaction between Contractor and a related party, Contractor must notify City in writing of the specific nature of the contemplated transaction, including the identity of the related party and the anticipated cost to be incurred, before any such transaction is consummated or cost incurred. If City, after such notification, authorizes in writing the proposed transaction, then the cost incurred will be included as a cost to be reimbursed, and Contractor must procure the Work, equipment, goods or service from the related party, as a Subcontractor. If City fails to authorize the transaction, Contractor must procure the Work, equipment, goods or service from some person or entity other than a related party.

SECTION 2 – COSTS NOT TO BE REIMBURSED

2.1 The Cost of Work must not include:

2.1.1 Salaries and other compensation of Contractor's personnel stationed at Contractor's principal office or offices other than the site office, except as specifically provided in Subparagraphs 1.2.2 and 1.2.3.

2.1.2 Expenses of Contractors' principal office and offices other than the site office.

2.1.3 Overhead and general expenses, except as may be expressly included in Section 1.

2.1.3.1 Costs of Contractor's home office computer services or other outside computer processing services will be considered overhead and general expense. Accordingly, Contractor should not plan to perform any such computer related services or alternatives at the field office when such services or functions can be performed at Contractor's home or branch offices, or other outside service locations.

2.1.4 Contractor's capital expenses, including interest on Contractor's capital employed for the Work.

2.1.5 Rental costs of machinery and equipment, except as specifically provided in subparagraph 1.5.2.

Docusign Envelope ID: E6C32D3C-1F2C-430A-AE31-0184A77678E5

2.1.6 Except as provided in Subparagraph 1.7.3 of the Agreement, costs due to the negligence or failure to fulfill a specific responsibility of Contractor, Subcontractors and Suppliers or anyone directly or indirectly employed by any of them or for whose acts of them may be liable.

2.1.7 Any cost not specifically and expressly described in Section 1.

2.1.8 Costs, other than costs included in Change Orders approved by City that would cause the GMP to be exceeded.

SECTION 3 – DISCOUNTS, REBATES, REFUNDS AND SAVINGS

3.1 Cash discounts obtained on payments made by Contractor will accrue to City if (1) before making the payment, Contractor included them in an Application for Payment and received payment therefore from City, or (2) City has deposited funds with Contractor with which to make payments; otherwise, cash discounts will accrue to Contractor. Trade discounts, rebates, refunds and amounts received from sales or surplus materials and equipment will accrue to City, and Contractor must make provisions so that they can be secured.

3.1.1 Cost of the Work will be credited with all insurance policy discounts, performance and payment bond rebates or refunds, refunds or return premiums from any Subcontractor default insurance, refunds or rebates from any Contractor controlled insurance programs applicable to the Project, merchandise rebates of any nature, refunds of any nature, insurance dividends; and a portion of any volume rebates or free material credits earned with purchase of material or other goods and services charged to the job.

3.1.2 "Cash" discounts which may accrue to Contractor will be limited to a maximum of 1.5% of invoice cost. Any portion of "Cash" discounts greater than 1.5% will automatically accrue to City if Contractor is eligible to take advantage of the discounts.

3.2 Amounts that accrue to City in accordance with the provisions of Paragraph 3.1 will be credited to City as a deduction from the Cost of the Work.

3.3 Any and all savings on the GMP, or any separately guaranteed items comprising the GMP, will belong to City, subject to any express right in the Agreement for Contractor to share in savings. Savings are subject to City's right to audit, and may be audited separately.

SECTION 4 – GENERAL CONDITIONS COSTS

4.1 General Conditions Costs may include, but are not limited to, the following types of costs incurred by Contractor during construction of the Work to the extent they are reimbursable Costs of the Work as delineated above: payroll costs for Work conducted at the site, payroll costs for the superintendent and full-time general foremen, payroll costs for management personnel resident and working on the site workers not included as direct labor costs engaged in support (e.g. loading/unloading, clean-up, etc.), administrative office personnel, costs of offices and temporary facilities including office materials, office supplies, office equipment, minor expenses, utilities, fuel, sanitary facilities and telephone services at the site, costs of liability insurance premiums not included in labor burdens for direct labor

Docusign Envelope ID: E6C32D3C-1F2C-430A-AE31-0184A77678E5

costs, costs of bond premiums, costs of consultants not in the direct employ of Contractor or Subcontractors, fees for permits and licenses.

4.2 General Conditions Costs may be paid on a percentage of the Agreement Price or on a lump/stipulate sum basis as set forth in the Agreement. All costs included in the General Conditions Costs will not be separately invoiced to or paid by City.

4.3 The total amount of General Conditions Costs for the Work may be divided by the number of days allowed for performance of the Work, to determine a fixed daily rate for General Conditions Costs that may be used in computing the General Conditions Costs allocated to any period of time, or for any adjustments in the General Conditions Costs agreed to in writing by City.

Docusign Envelope ID: E6C32D3C-1F2C-430A-AE31-0184A77678E5

LANDSCAPE ESTABLISHMENT PERIOD

Section 1 – Description and General

Contractor is in direct control of work performed under the Landscape Establishment Period. If work is subcontracted, a representative of the Contractor will be present at the site of the work for all hours that the subcontractor works. Subcontracting of Landscape Establishment work will be permitted for weed eradication with herbicides, because of special licensing. A licensed temporary service may be used to supply labor to Contractor if Contractor has received approval from City Representatives. Contractor will submit the required subcontract documentation.

Contractor must provide adequate personnel to accomplish the required maintenance of the plant materials at intervals acceptable to City Representatives.

If not healthy at the end of the maintenance period, the maintenance must be continued until the plant material is approved by City.

1.1 Time and Schedule

Unless otherwise expressly agreed to in writing by City, the Landscape Establishment Period will be per General Conditions Section 6.5.4.

1.2 Planted Stock and Seeding Establishment

1.2.1 Tree planting and staking must be per City of Chandler Standard Detail C-801.

1.2.2 All trees will stand erect on their own without stakes when brought to this site. If the tree cannot stand on its own when nursery stakes are removed, the tree will be removed and replaced.

1.3 Pre-Emergent Herbicide and Weed Control

1.3.1 Contractor will provide three applications of an approved pre-emergent herbicide on all unpaved areas of the project, as directed by City Representatives, to control weed growth in all areas of the project. The number of applications may be increased as directed by the City Representative, and at no additional cost to City, if the City Representative deems additional applications are required to control weed growth.

1.3.2 Application sequence will be approved in advance by City. The first application of pre-emergent will be completed prior to the application of Decomposed Granite and will be included with the cost of the Decomposed Granite as specified and part of the Construction Phase portion of work. The second application of pre-emergent will be completed after installation of the Decomposed Granit and no later than half-way through the Landscape Establishment Period. The third and final application of pre-emergent will be applied 15 days prior to completion of the Landscape Establishment portion of the project. The second and third pre-emergent applications will be included with the cost of Landscape Establishment. Watering will be completed in accordance with the manufacturer's recommendations, as included and as related to each application.

1.3.3 The pre-emergent herbicide will be applied in accordance with the Technical Specifications and the recommendations of the pre-emergent herbicide manufacturer, as approved by City Representatives.

Docusign Envelope ID: E6C32D3C-1F2C-430A-AE31-0184A77678E5

1.3.4 The control of weeds will be accomplished by the use of herbicides. Manual removal of weeds will be required, after herbicides have taken affect.

1.3.5 Contractor is responsible for the removal and disposal of all trash and debris that during the Landscape Establishment Period. Contractor will keep the project in a neat and orderly manner during the duration of the Landscape Establishment Period.

1.4 Water

The water used during Landscape Establishment to properly maintain the plant material will be furnished by City, at designated sources from within the project limits, at no charge to Contractor. Contractor will be responsible for all equipment, materials and labor necessary to load, transport and unload water for watering purposes.

1.5 Plant Material Replacements

The plant material replacement will be considered as included in the work for Landscape Establishment, and will be made at no charge to the City.

1.5.1 Shrub and Plant Replacement - During the second half of the Landscaping Establishment period, Contractor will provide, where required, plant replacements as follows:

Original Size	Replacement Size
1 gallon	5 gallon
5 gallon	15 gallon
15 gallon	24-inch box
36-inch box	48-inch box

1.5.2 Tree Replacement – During the second half of the Landscape Establishment Period, Contractor will provide plant material replacements for existing plants that die as follows:

Existing Plant Material Sizes	Replacement Size
Trees:	
2-inch Caliper	24-inch box
4-inch Caliper	36-inch box
6-inch Caliper and greater	54-inch box
Shrubs:	
All Existing Shrubs	15 gallon

1.6 Measurement and Payment

See Technical Specifications for Measurement Payment provisions.

Docusign Envelope ID: E6C32D3C-1F2C-430A-AE31-0184A77678E5

EXHIBIT F

SUBCONTRACTOR DOCUMENTS WITH CM@RISK

Any subcontractor assumptions, clarifications, exclusions, terms & conditions, signature blocks, etc. included are strictly between the CM@RISK and their subcontractors, and do not apply to the Agreement between the CM@RISK and the City.

N/A

CHANDLER arizona

FORENSIC SERVICES FACILITY STUDY
PROJECT NO. PD2301.251

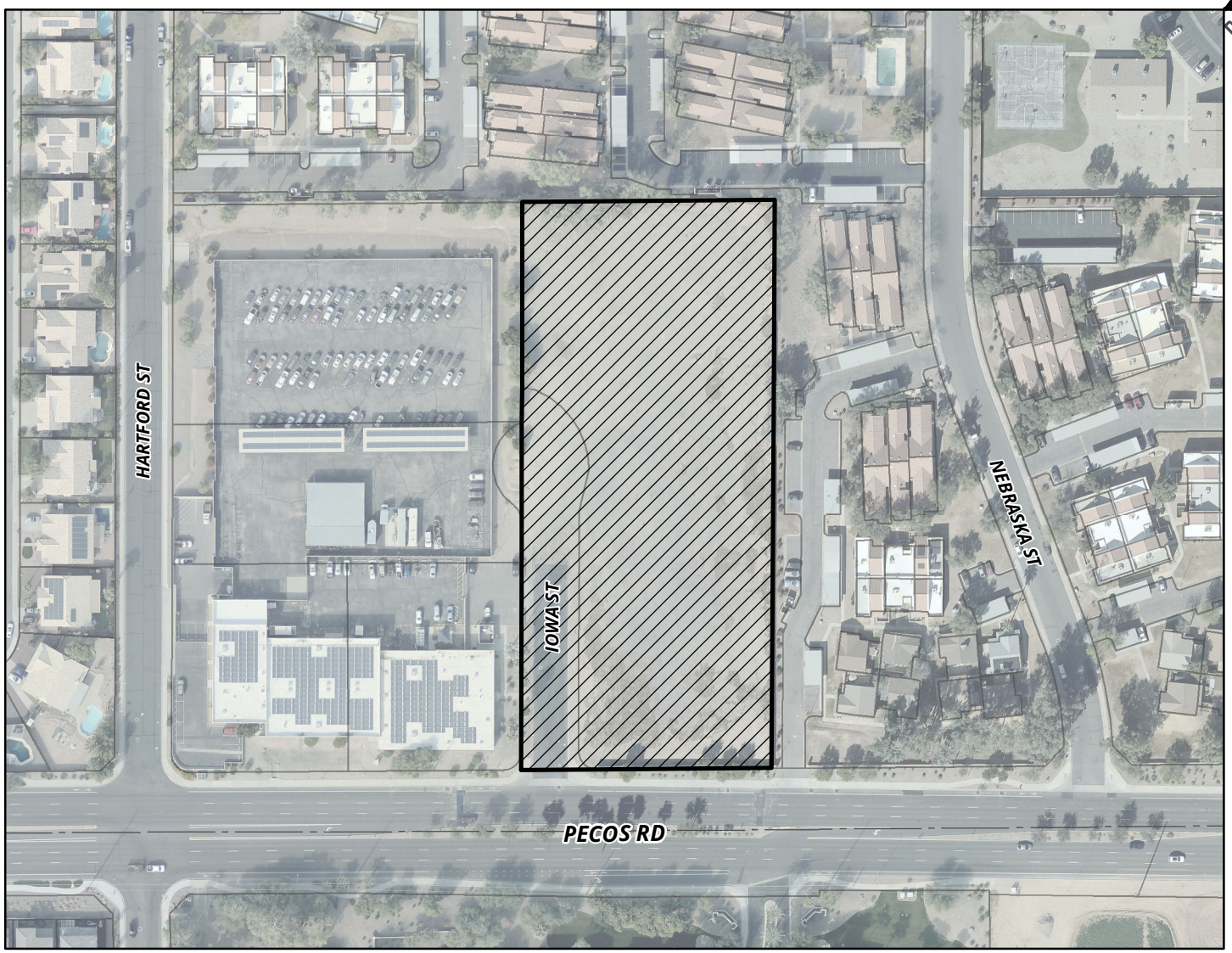

MEMO NO. CP26-024

PROJECT LOCATION

NTS

ChanGIS

F:\ENGINEER\GENSERV_ArcMap_Shared\Map Requests\Capital Projects\CP23-087 FORENSIC SERVICES FACILITY STUDY\CP23-087.mxd 12/15/2022 MARICELAH

City Council Memorandum Public Works & Utilities Memo No. UA26-010

Date: September 15, 2025
To: Mayor and Council
Thru: John M. Pombier, Acting City Manager
Dawn Lang, Deputy City Manager/CFO
Jeremy Abbott, Acting Public Works and Utilities Director
From: Danny Sargent, Water Systems Senior Manager
Subject: Purchase of Refrigerated Liquid Carbon Dioxide

Proposed Motion:

Move City Council approve the purchase of refrigerated liquid carbon dioxide, from Reliant Gases, Ltd., utilizing City of Tempe Contract No. WUD22-135-02, in an amount not to exceed $570,000.

Background/Discussion:

Liquid carbon dioxide (CO2) is used routinely in water treatment processes to control pH and condition the water for further treatment. Both the Pecos Surface Water Treatment Plant (SWTP) and the Ocotillo Brine Reduction Facility (OBRF) use liquid CO2 as necessary to enhance and optimize the treatment processes.

This contract will provide for purchase and delivery of the refrigerated liquid carbon dioxide for these two water treatment facilities for the next year. The cost of liquid CO2 used by the OBRF will be reimbursed by Intel Corporation and the Pecos SWTP costs are paid by the Water Operating Fund.

Evaluation:

The City of Tempe competitively solicited and awarded a contract for refrigerated liquid carbon dioxide. The city has a current agreement with the City of Tempe allowing for the cooperative use of its contracts. The term of the City of Tempe contract is through May 31, 2026, with options to extend through May 31, 2027.

Financial Implications:

Due to market factors in the bulk chemical industry, the cost per ton of liquid CO2 increased from $390 per ton to $430 per ton (10% increase). Accordingly, both OBRF (Fund 616) and Pecos SWTP (Fund 605) increased their spending request limit by 10% to compensate for the increased cost. Pecos SWTP further increased their spending request to $450K, beyond the 10% due to contract price increase, to feed additional CO2 in the water treatment process at Pecos to enhance water quality and reduce organic material in the SRP source water.

Fiscal Impact

Account No.	Fund Name	Program Name	Dollar Amount	CIP Funded Y/N
605.3830.5318.0.0.0	Water Operating	Chemicals	$450,000	N
616.3930.5318.0.0.0	WW Industrial Treatment	Chemicals	$120,000	N

CHANDLER arizona
Community of Innovation

City Council Memorandum Public Works & Utilities Memo No. UA26-011

Date: September 15, 2025
To: Mayor and Council
Thru: John M. Pombier, Acting City Manager
Dawn Lang, Deputy City Manager/CFO
Jeremy Abbott, Acting Public Works and Utilities Director
From: Donald Tuscano, Utility Plant Superintendent
Subject: Agreement No. WW5-885-4923, with Carbon Activated Corp., for Purchase of Activated Carbon

---

Proposed Motion:

Move City Council approve Agreement No. WW5-885-4923, with Carbon Activated Corp., for the purchase of activated carbon, in an amount not to exceed $380,000, for a one-year term, September 25, 2025, through September 24, 2026, with the option of up to four one-year extensions.

Background/Discussion:

Activated Carbon (AC) is a granular carbon material used in odor control systems at the city's wastewater treatment facilities to absorb hydrogen sulfide gas (H2S) produced in the wastewater collection system. AC used in the wastewater odor control systems has a limited lifespan and deteriorates during use. The effectiveness of the carbon in the odor scrubbers at the city's facilities is nearing the end of its useful life. Replacement of the AC is expected twice per year, at a minimum.

Evaluation:

On July 1, 2025, City staff issued Request for Proposal No. WW5-885-4923, for the purchase of activated carbon. Notification was sent to all registered vendors. Five proposals were received from the following offerors:

1. Carbon Activated Corp.
2. CarbUSA LLC
3. Empowered Care Homes, dba ECH LLC

4. Patriot Environmental Services, Inc.
5. Univar Solutions USA, LLC

Staff evaluated the proposal and recommends award to Carbon Activated Corp., which submitted the most advantageous offer to the city in accordance with the evaluation criteria. The term of the agreement is September 25, 2025, through September 24, 2026, with the option of up to four additional one-year extensions.

Fiscal Impact

Account No.	Fund Name	Program Name	Dollar Amount	CIP Funded Y/N
615.3970.5219.0.0.0	Wastewater Operating	N/A	$200,000	N
615.3960.5219.0.0.0	Wastewater Operating	N/A	$180,000	N

Attachments

Agreement

Docusign Envelope ID: 63748EF3-0544-4D4D-B2EF-0A97E1CEDDC2

City Clerk Document No. _____

City Council Meeting Date:_____

CITY OF CHANDLER PURCHASE AGREEMENT
ACTIVATED CARBON
CITY OF CHANDLER AGREEMENT NO. WW5-885-4923

THIS AGREEMENT (Agreement) is made and entered into by and between the City of Chandler, an Arizona municipal corporation (City), and Carbon Activated Corp., a California Corporation (Contractor), (City and Contractor may individually be referred to as Party and collectively referred to as Parties), made _____ , 2025 (Effective Date).

RECITALS

A. City proposes to purchase activated carbon as more fully described in Exhibit A, which is attached to and made a part of this Agreement by this reference.

B. Contractor is ready, willing, and able to provide the goods or services described in Exhibit A for the compensation and fees set forth and as described in Exhibit B, which is attached to and made a part of this Agreement by this reference.

C. City desires to contract with the Contractor to provide these goods or services under the terms and conditions set forth in this Agreement.

AGREEMENT

NOW, THEREFORE, in consideration of the premises and the mutual promises contained in this Agreement, City and Contractor agree as follows:

SECTION I: DEFINITIONS

For purposes of this Agreement, the following definitions apply:
Agreement means the legal agreement executed between the City and the Contractor
City means the City of Chandler, Arizona
Contractor means the individual, partnership, or corporation named in the Agreement
Days means calendar days
May, Should means something that is not mandatory but permissible
Shall, Will, Must means a mandatory requirement

SECTION II: CONTRACTOR'S SERVICES

Contractor must perform in accordance with Exhibit A to the City's satisfaction within the terms

and conditions of this Agreement and within the care and skill that a person who provides similar goods services in Chandler, Arizona exercises under similar conditions. All goods or services furnished by Contractor under this Agreement must be performed in a skilled and workmanlike manner. Unless authorized by the City in writing, all fixtures, furnishings, and equipment furnished by Contractor as part of the goods or services under this Agreement must be new, or the latest model, and of the most suitable grade and quality for the intended purpose of the goods or services.

SECTION III: PERIOD OF SERVICE

Contractor must perform in accordance with Exhibit A for the term of this Agreement.
The term of the Agreement is 1 year (s), and begins on September 25, 2025 and ends on September 24, 2026, unless sooner terminated in accordance with this Agreement. The City and the Contractor may mutually agree to extend the Agreement for up to 4 additional terms of 1 year (s) each, or portions thereof. The City reserves the right, at its sole discretion, to extend the Agreement for up to 60 days beyond the expiration of any extension term.

SECTION IV: PAYMENT OF COMPENSATION AND FEES

4.1 Unless amended in writing by the Parties, Contractor's compensation and fees as more fully described in Exhibit B for performance approved and accepted by the City under this Agreement must not exceed **$380,000.00** Contractor must submit requests for payment for goods or services approved and accepted during the previous billing period and must include, as applicable, detailed invoices and receipts, a narrative description of the tasks accomplished during the billing period, a list of any deliverables submitted, and any subcontractor's or supplier's actual requests for payment plus similar narrative and listing of their work. Payment for those goods or services negotiated as a lump sum will be made in accordance with the percentage of the goods furnished or services completed during the preceding billing period. Goods or services negotiated as a not-to-exceed fee will be paid in accordance with the goods furnished or services completed during the preceding month. All requests for payment must be submitted to the City for review and approval. The City will make payment for approved and accepted goods or services within 30 days of the City's receipt of the request for payment.

4.2 Applicable Taxes. The Contractor will pay all applicable taxes. The City is subject to all applicable state and local transaction privilege taxes. To the extent any state and local transaction privilege taxes apply to sales made under the terms of this Agreement, it is the responsibility of the Contractor to collect and remit all applicable taxes to the proper taxing jurisdiction of authority.

4.3 Tax Indemnification. The Contractor and all subcontractors will pay all Federal, state, and local taxes applicable to its operation and any persons employed by the Contractor. The Contractor will and require all subcontractors to hold the City harmless from any responsibility for taxes, damages, and interest, if applicable, contributions required under Federal, state, and local laws and regulations and any other costs including transaction privilege taxes, unemployment compensation insurance, Social Security, and Worker's Compensation.

4.4 All prices offered herein shall be firm against any increase for the initial term of the Agreement. Prior to commencement of subsequent renewal terms, the City may approve a fully

documented request for a price adjustment. The City shall determine whether any requested price increases for extension terms is acceptable to the City. If the City approves the price increase, the price shall remain firm for the renewal term for which it was requested. If a price increase is agreed upon by the Parties a written Agreement Amendment shall be approved and executed by the Parties.

SECTION V: GENERAL CONDITIONS

5.1 Records/Audit. Records of the Contractor's direct personnel payroll, reimbursable expenses pertaining to this Agreement and records of accounts between the City and Contractor must be kept on the basis of generally accepted accounting principles and must be made available to the City and its auditors for up to three years following the City's final acceptance of the goods or services under this Agreement. The City, its authorized representative, or any federal agency, reserves the right to audit Contractor's records to verify the accuracy and appropriateness of all cost and pricing data, including data used to negotiate this Agreement and any amendments. The City reserves the right to decrease the total amount of Agreement price or payments made under this Agreement or request reimbursement from the Contractor following final contract payment on this Agreement if, upon audit of the Contractor's records, the audit discloses the Contractor has provided false, misleading, or inaccurate cost and pricing data. The Contractor will include a similar provision in all of its contracts with subcontractors providing goods or services under the Agreement Documents to ensure that the City, its authorized representative, or the appropriate federal agency, has access to the subcontractors' records to verify the accuracy of all cost and pricing data. The City reserves the right to decrease Contract price or payments made on this Agreement or request reimbursement from the Contractor following final payment on this Agreement if the above provision is not included in subcontractor agreements, and one or more subcontractors refuse to allow the City to audit their records to verify the accuracy and appropriateness of all cost and pricing data. If, following an audit of this Agreement, the audit discloses the Contractor has provided false, misleading, or inaccurate cost and pricing data, and the cost discrepancies exceed 1% of the total Agreement billings, the Contractor will be liable for reimbursement of the reasonable, actual cost of the audit.

5.2 Alteration in Character of Work. Whenever an alteration in the character of work results in a substantial change in this Agreement, thereby materially increasing or decreasing the scope of work, cost of goods, cost of performance, or Project schedule, the goods or services will be performed as directed by the City. However, before any modified work is started, a written amendment must be approved and executed by the City and the Contractor. Such amendment must not be effective until approved by the City. Additions to, modifications, or deletions from this Agreement as provided herein may be made, and the compensation to be paid to the Contractor may accordingly be adjusted by mutual agreement of the Parties. It is distinctly understood and agreed that no claim for extra work done or materials furnished by the Contractor will be allowed by the City except as provided herein, nor must the Contractor do any work or furnish any materials not covered by this Agreement unless such work is first authorized in writing. Any such work or materials furnished by the Contractor without prior written authorization will be at Contractor's own risk, cost, and expense, and Contractor hereby agrees that without written authorization Contractor will make no claim for compensation for such work or materials furnished.

5.3 Termination for Convenience. The City and the Contractor hereby agree to the full performance of the covenants contained herein, except that the City reserves the right, at its discretion and without cause, to terminate or abandon any purchase or service provided for in this Agreement, or abandon any portion of the Project for which the Contractor has performed. In the event the City abandons or suspends the purchase or services, or any part of the purchase or services as provided in this Agreement, the City will notify the Contractor in writing and immediately after receiving such notice, the Contractor must discontinue advancing the work specified under this Agreement. Upon such termination, abandonment, or suspension, the Contractor must deliver to the City all drawings, plans, specifications, special provisions, estimates and other work entirely or partially completed, together with all unused materials supplied by the City. The Contractor must appraise the goods or services Contractor has completed and submit Contractor's appraisal to the City for evaluation. The City may inspect the Contractor's goods or services to appraise the status completed. The Contractor will receive compensation in full for goods provided or services performed to the date of such termination. The fee will be paid in accordance with Section IV of this Agreement, and as mutually agreed upon by the Contractor and the City. If there is no mutual agreement on payment, the final determination will be made in accordance with the Disputes provision in this Agreement. However, in no event may the payment exceed the payment set forth in this Agreement nor as amended in accordance with Alteration in Character of Work. The City will make the final payment within 60 days after the Contractor has delivered the last of the partially completed items and the Parties agree on the final payment. If the City is found to have improperly terminated the Agreement for cause or default, the termination will be converted to a termination for convenience in accordance with the provisions of this Agreement.

5.4 Termination for Cause. The City may terminate this Agreement for Cause upon the occurrence of any one or more of the following events: in the event that (a) the Contractor fails to perform pursuant to the terms of this Agreement, (b) the Contractor is adjudged a bankrupt or insolvent, (c) the Contractor makes a general assignment for the benefit of creditors, (d) a trustee or receiver is appointed for Contractor or for any of Contractor’s property (e) the Contractor files a petition to take advantage of any debtor's act, or to reorganize under the bankruptcy or similar laws, (f) the Contractor disregards laws, ordinances, rules, regulations or orders of any public body having jurisdiction, or (g) the Contractor fails to cure default within the time requested. Where Agreement has been so terminated by City, the termination will not affect any rights of City against Contractor then existing or which may thereafter accrue.

5.5 Indemnification. The Contractor (Indemnitor) must indemnify, defend, save and hold harmless the City and its officers, officials, agents and employees (Indemnitee) from any and all claims, actions, liabilities, damages, losses or expenses (including court costs, attorneys' fees and costs of claim processing, investigation and litigation) (Claims) caused or alleged to be caused, in whole or in part, by the wrongful, negligent or willful acts, or errors or omissions of the Contractor or any of its owners, officers, directors, agents, employees, or subcontractors in connection with this Agreement. This indemnity includes any claim or amount arising out of or recovered under workers' compensation law or on account of the failure of the Contractor to conform to any federal, state or local law, statute, ordinance, rule, regulation or court decree. The Contractor must indemnify Indemnitee from and against any and all Claims, except those arising solely from Indemnitee's own negligent or willful acts or omissions. The Contractor is responsible for primary loss investigation, defense and judgment costs where this indemnification applies. In consideration of the award of this

Agreement, the Contractor agrees to waive all rights of subrogation against Indemnitee for losses arising from or related to this Agreement. The obligations of the Contractor under this provision survive the termination or expiration of this Agreement.

5.6 Insurance Requirements. Contractor must procure insurance under the terms and conditions and for the amounts of coverage set forth in Exhibit C against claims that may arise from or relate to performance of the work under this Agreement by Contractor and its agents, representatives, employees, and subcontractors. Contractor and any subcontractors must maintain this insurance until all of their obligations have been discharged, including any warranty periods under this Agreement. These insurance requirements are minimum requirements for this Agreement and in no way limit the indemnity covenants contained in this Agreement. The City in no way warrants that the minimum limits stated in Exhibit C are sufficient to protect the Contractor from liabilities that might arise out of the performance of the work under this Agreement by the Contractor, the Contractor's agents, representatives, employees, or subcontractors. Contractor is free to purchase such additional insurance as may be determined necessary.

5.7 Cooperation and Further Documentation. The Contractor agrees to provide the City such other duly executed documents as may be reasonably requested by the City to implement the intent of this Agreement.

5.8 Notices. Unless otherwise provided, notice under this Agreement must be in writing and will be deemed to have been duly given and received either (a) on the date of service if personally served on the party to whom notice is to be given, or (b) on the date notice is sent if by electronic mail, or (c) on the third day after the date of the postmark of deposit by first class United States mail, registered or certified, postage prepaid and properly addressed as follows:

For the City	**For the Contractor**
Name: Purchasing Division	Name: Orlando Ruelas
Title: Purchasing Officer	Title: Branch Manager
Address: 175 S. Arizona Ave	Address: 2250 S. Central Avenue
Chandler, AZ 85225	Compton, CA 90220
Phone: 480.752.2400	Phone: 623.606.5712
Email: purchasing@chandleraz.gov	Email: orlandor@activatedcarbon.com

5.9 Successors and Assigns. City and Contractor each bind itself, its partners, successors, assigns, and legal representatives to the other party to this Agreement and to the partners, successors, assigns, and legal representatives of such other party in respect to all covenants of this Agreement. Neither the City nor the Contractor may assign, sublet, or transfer its interest in this Agreement without the written consent of the other party. In no event may any contractual relation be created between any third party and the City.

5.10 Disputes. In any dispute arising out of an interpretation of this Agreement or the duties required not disposed of by agreement between the Contractor and the City, the final determination at the administrative level will be made by the City Purchasing and Materials Manager.

5.11 Completeness and Accuracy of Contractor's Work. The Contractor must be responsible for the completeness and accuracy of Contractor's services, data, and other work prepared or compiled under Contractor's obligation under this Agreement and must correct, at Contractor's expense, all willful or negligent errors, omissions, or acts that may be discovered. The fact that the City has accepted or approved the Contractor's work will in no way relieve the Contractor of any of Contractor's responsibilities.

5.12 Withholding Payment. The City reserves the right to withhold funds from the Contractor's payments up to the amount equal to the claims the City may have against the Contractor until such time that a settlement on those claims has been reached.

5.13 City's Right of Cancellation. The Parties acknowledge that this Agreement is subject to cancellation by the City under the provisions of Section 38-511, Arizona Revised Statutes (A.R.S.).

5.14 Independent Contractor. For this Agreement the Contractor constitutes an independent contractor. Any provisions in this Agreement that may appear to give the City the right to direct the Contractor as to the details of accomplishing the work or to exercise a measure of control over the work means that the Contractor must follow the wishes of the City as to the results of the work only. These results must comply with all applicable laws and ordinances.

5.15 Project Staffing. Prior to the start of any work under this Agreement, the Contractor must assign to the City the key personnel that will be involved in furnishing goods or performing services prescribed in the Agreement. The City may acknowledge its acceptance of such personnel to furnish goods or perform services under this Agreement. At any time hereafter that the Contractor desires to change key personnel while performing under the Agreement, the Contractor must submit the qualifications of the new personnel to the City for prior approval. The Contractor will maintain an adequate and competent staff of qualified persons, as may be determined by the City, throughout the performance of this Agreement to ensure acceptable and timely completion of the Scope of Work. If the City objects, with reasonable cause, to any of the Contractor's staff, the Contractor must take prompt corrective action acceptable to the City and, if required, remove such personnel from the Project and replace with new personnel agreed to by the City.

5.16 Subcontractors. Prior to beginning the work, the Contractor must furnish the City for approval the names of subcontractors to be used under this Agreement. Any subsequent changes are subject to the City’s written prior approval.

5.17 Force Majeure. If either party is delayed or prevented from the performance of any act required under this Agreement by reason of acts of God or other cause beyond the control and without fault of the Party (financial inability excepted), performance of that act may be excused, but only for the period of the delay, if the Party provides written notice to the other Party within ten days of such act. The time for performance of the act may be extended for a period equivalent to the period of delay from the date written notice is received by the other Party.

5.18 Compliance with Laws. Contractor understands, acknowledges, and agrees to comply with the Americans with Disabilities Act, the Immigration Reform and Control Act of 1986 and

the Drug Free Workplace Act of 1989. All services performed by Contractor must also comply with all applicable City of Chandler codes, ordinances, and requirements. Contractor agrees to permit the City to verify Contractor's compliance.

5.19 No Israel Boycott. By entering into this Agreement, Contractor certifies that Contractor is not currently engaged in, and agrees for the duration of the Agreement, not to engage in a boycott of Israel as defined by state statute.

5.20 Legal Worker Requirements. A.R.S. § 41-4401 prohibits the City from awarding a contract to any contractor who fails, or whose subcontractors fail, to comply with A.R.S. § 23-214(A). Therefore, Contractor agrees Contractor and each subcontractor it uses warrants their compliance with all federal immigration laws and regulations that relate to their employees and their compliance with§ 23-214, subsection A. A breach of this warranty will be deemed a material breach of the Agreement and may be subject to penalties up to and including termination of the Agreement. City retains the legal right to inspect the papers of any Contractor's or subcontractor's employee who provides goods or services under this Agreement to ensure that the Contractor and subcontractors comply with the warranty under this provision.

5.21 Lawful Presence Requirement. A.R.S. §§ 1-501 and 1-502 prohibit the City from awarding a contract to any natural person who cannot establish that such person is lawfully present in the United States. To establish lawful presence, a person must produce qualifying identification and sign a City-provided affidavit affirming that the identification provided is genuine. This requirement will be imposed at the time of contract award. This requirement does not apply to business organizations such as corporations, partnerships, or limited liability companies.

5.22 Forced Labor of Ethnic Uyghurs Prohibited. By entering into this Agreement, Contractor certifies and agrees Contractor does not currently use and will not use for the term of this Agreement: (i) the forced labor of ethnic Uyghurs in the People's Republic of China; or (ii) any goods or services produced by the forced labor of ethnic Uyghurs in the People's Republic of China; or (iii) any contractors, subcontractors or suppliers that use the forced labor or any goods or services produced by the forced labor of ethnic Uyghurs in the People's Republic of China.

5.23 Covenant Against Contingent Fees. Contractor warrants that no person has been employed or retained to solicit or secure this Agreement upon an agreement or understanding for a commission, percentage, brokerage, or contingent fee, and that no member of the Chandler City Council, or any City employee has any interest, financially, or otherwise, in Contractor's firm. For breach or violation of this warrant, the City may annul this Agreement without liability or, at its discretion, to deduct from the Agreement price or consideration, the full amount of such commission, percentage, brokerage, or contingent fee.

5.24 Non-Waiver Provision. The failure of either Party to enforce any of the provisions of this Agreement or to require performance of the other Party of any of the provisions hereof must not be construed to be a waiver of such provisions, nor must it affect the validity of this Agreement or any part thereof, or the right of either Party to thereafter enforce each and every provision.

5.25 Disclosure of Information Adverse to the City's Interests. To evaluate and avoid potential conflicts of interest, the Contractor must provide written notice to the City, as set forth in this Section, of any work or services performed by the Contractor for third parties that may involve or be associated with any real property or personal property owned or leased by the City. Such notice must be given seven business days prior to commencement of the services by the Contractor for a third party, or seven business days prior to an adverse action as defined below. Written notice and disclosure must be sent to the City's Purchasing and Materials Manager. An adverse action under this Agreement includes, but is not limited to: (a) using data as defined in the Agreement acquired in connection with this Agreement to assist a third party in pursuing administrative or judicial action against the City; or (b) testifying or providing evidence on behalf of any person in connection with an administrative or judicial action against the City; or (c) using data to produce income for the Contractor or its employees independently of performing the services under this Agreement, without the prior written consent of the City. Contractor represents that except for those persons, entities, and projects identified to the City, the services performed by the Contractor under this Agreement are not expected to create an interest with any person, entity, or third party project that is or may be adverse to the City's interests. Contractor's failure to provide a written notice and disclosure of the information as set forth in this Section constitute a material breach of this Agreement.

5.26 Data Confidentiality and Data Security. As used in the Agreement, data means all information, whether written or verbal, including plans, photographs, studies, investigations, audits, analyses, samples, reports, calculations, internal memos, meeting minutes, data field notes, work product, proposals, correspondence and any other similar documents or information prepared by, obtained by, or transmitted to the Contractor or its subcontractors in the performance of this Agreement. The Parties agree that all data, regardless of form, including originals, images, and reproductions, prepared by, obtained by, or transmitted to the Contractor or its subcontractors in connection with the Contractor's or its subcontractor's performance of this Agreement is confidential and proprietary information belonging to the City. Except as specifically provided in this Agreement, Contractor or its subcontractors must not divulge data to any third party without the City's prior written consent. Contractor or its subcontractors must not use the data for any purposes except to perform the services required under this Agreement. These prohibitions do not apply to the following data provided to the Contractor or its subcontractors have first given the required notice to the City: (a) data which was known to the Contractor or its subcontractors prior to its performance under this Agreement unless such data was acquired in connection with work performed for the City; or (b) data which was acquired by the Contractor or its subcontractors in its performance under this Agreement and which was disclosed to the Contractor or its subcontractors by a third party, who to the best of the Contractor's or its subcontractors knowledge and belief, had the legal right to make such disclosure and the Contractor or its subcontractors are not otherwise required to hold such data in confidence; or (c) data which is required to be disclosed by virtue of law, regulation, or court order, to which the Contractor or its subcontractors are subject. In the event the Contractor or its subcontractors are required or requested to disclose data to a third party, or any other information to which the Contractor or its subcontractors became privy as a result of any other contract with the City, the Contractor must first notify the City as set forth in this Section of the request or demand for the data. The Contractor or its subcontractors must give the City sufficient facts so that the City can be given an opportunity to first give its consent or take such action that the City may deem

appropriate to protect such data or other information from disclosure. Unless prohibited by law, within ten calendar days after completion or termination of services under this Agreement, the Contractor or its subcontractors must promptly deliver, as set forth in this Section, a copy of all data to the City. All data must continue to be subject to the confidentiality agreements of this Agreement. Contractor or its subcontractors assume all liability to maintain the confidentiality of the data in its possession and agrees to compensate the City if any of the provisions of this Section are violated by the Contractor, its employees, agents or subcontractors. Solely for the purposes of seeking injunctive relief, it is agreed that a breach of this Section must be deemed to cause irreparable harm that justifies injunctive relief in court. Contractor agrees that the requirements of this Section must be incorporated into all subcontracts entered into by Contractor. A violation of this Section may result in immediate termination of this Agreement without notice.

5.27 Personal Identifying Information-Data Security. Personal identifying information, financial account information, or restricted City information, whether electronic format or hard copy, must be secured and protected at all times by Contractor and any of its subcontractors. At a minimum, Contractor must encrypt or password-protect electronic files. This includes data saved to laptop computers, computerized devices, or removable storage devices. When personal identifying information, financial account information, or restricted City information, regardless of its format, is no longer necessary, the information must be redacted or destroyed through appropriate and secure methods that ensure the information cannot be viewed, accessed, or reconstructed. In the event that data collected or obtained by Contractor or its subcontractors in connection with this Agreement is believed to have been compromised, Contractor or its subcontractors must immediately notify the City contact. Contractor agrees to reimburse the City for any costs incurred by the City to investigate potential breaches of this data and, where applicable, the cost of notifying individuals who may be impacted by the breach. Contractor agrees that the requirements of this Section must be incorporated into all subcontracts entered into by Contractor. It is further agreed that a violation of this Section must be deemed to cause irreparable harm that justifies injunctive relief in court. A violation of this Section may result in immediate termination of this Agreement without notice. The obligations of Contractor or its subcontractors under this Section must survive the termination of this Agreement.

5.28 Jurisdiction and Venue. This Agreement is made under, and must be construed in accordance with and governed by the laws of the State of Arizona without regard to the conflicts or choice of law provisions thereof. Any action to enforce any provision of this Agreement or to obtain any remedy with respect hereto must be brought in the courts located in Maricopa County, Arizona, and for this purpose, each Party hereby expressly and irrevocably consents to the jurisdiction and venue of such court.

5.29 Survival. All warranties, representations, and indemnifications by the Contractor must survive the completion or termination of this Agreement.

5.30 Modification. Except as expressly provided herein to the contrary, no supplement, modification, or amendment of any term of this Agreement will be deemed binding or effective unless in writing and signed by the Parties.

5.31 Severability. If any provision of this Agreement or the application to any person or circumstance may be invalid, illegal or unenforceable to any extent, the remainder of this Agreement and the application will not be affected and will be enforceable to the fullest extent permitted by law.

5.32 Integration. This Agreement contains the full agreement of the Parties. Any prior or contemporaneous written or oral agreement between the Parties regarding the subject matter is merged and superseded.

5.33 Time is of the Essence. Time of each of the terms, covenants, and conditions of this Agreement is hereby expressly made of the essence.

5.34 Date of Performance. If the date of performance of any obligation or the last day of any time period provided for should fall on a Saturday, Sunday, or holiday for the City, the obligation will be due and owing, and the time period will expire, on the first day after which is not a Saturday, Sunday or legal City holiday. Except as may otherwise be set forth in this Agreement, any performance provided for herein will be timely made if completed no later than 5:00 p.m. (Chandler time) on the day of performance.

5.35 Third Party Beneficiary. Nothing under this Agreement will be construed to give any rights or benefits in the Agreement to anyone other than the City and the Contractor, and all duties and responsibilities undertaken pursuant to this Agreement will be for the sole and exclusive benefit of City and the Contractor and not for the benefit of any other party.

5.36 Conflict in Language. All work performed must conform to all applicable City of Chandler codes, ordinances, and requirements as outlined in this Agreement. If there is a conflict in interpretation between provisions in this Agreement and those in the Exhibits, the provisions in this Agreement prevail.

5.37 Document/Information Release. Documents and materials released to the Contractor, which are identified by the City as sensitive and confidential, are the City's property. The document/material must be issued by and returned to the City upon completion of the services under this Agreement. Contractor's secondary distribution, disclosure, copying, or duplication in any manner is prohibited without the City's prior written approval. The document/material must be kept secure at all times. This directive applies to all City documents, whether in photographic, printed, or electronic data format.

5.38 Exhibits. The following exhibits are made a part of this Agreement and are incorporated by reference:

Exhibit A - Project Description/Scope of Work
Exhibit B - Compensation and Fees
Exhibit C - Insurance Requirements
Exhibit D - Special Conditions

5.39 Special Conditions. As part of the goods furnished or the services Contractor provides under this Agreement, Contractor agrees to comply with and fully perform the special terms and conditions set forth in Exhibit D, which is attached to and made a part of this Agreement.

5.40 Cooperative Use of Agreement. In addition to the City of Chandler and with approval of the Contractor, this Agreement may be extended for use by other municipalities, school districts and government agencies of the State. Any such usage by other entities must be in accordance with the ordinance, charter and/or procurement rules and regulations of the respective political entity.

If required to provide services on a school district property at least five times during a month, Contractor will submit a full set of fingerprints to the school of each person or employee who may provide such service. The District will conduct a fingerprint check in accordance with A.R.S. 41-1750 and Public Law 92-544 of all Contractors, subcontractors or vendors and their employees for which fingerprints are submitted to the District. Additionally, the Contractor will comply with the governing body fingerprinting policies of each individual school district/public entity. Contractor, sub-contractors, vendors and their employees will not provide services on school district properties until authorized by the District.

Orders placed by other agencies and payment thereof will be the sole responsibility of that agency. The City will not be responsible for any disputes arising out of transactions made by other agencies who utilize this Agreement.

5.41 Non-Discrimination and Anti-Harassment Laws. Contractor must comply with all applicable City, state, and federal non-discrimination and anti-harassment laws, rules, and regulations.

5.42 Licenses and Permits. Beginning with the Effective Date and for the full term of this Agreement, Contractor must maintain all applicable City, state, and federal licenses and permits required to fully perform Contractor's services under this Agreement.

5.43 Warranties. Unless otherwise provided in Exhibit D, the Contractor must furnish a one-year warranty on all work and services performed under this Agreement. Contractor must furnish, or cause to be furnished, a two-year warranty on all fixtures, furnishings, and equipment furnished by Contractor, subcontractors, or suppliers under this Agreement. Any defects in design, workmanship, or materials that do not comply with this Agreement must be corrected by Contractor (including, but not limited to, all parts and labor) at Contractor's sole cost and expense. All written warranties and redlines for as-built conditions must be delivered to the City on or before the City's final acceptance of Contractor's services under this Agreement.

5.44 Liens. The Contractor warrants that the materials supplied under this Agreement are free of liens and will remain free of liens.

5.45 Quality. Unless otherwise modified elsewhere in these terms and conditions, the Contractor warrants that, for one year after acceptance by the City of the materials, they will be (a) of a quality to pass without objection in the trade under the Agreement description, (b) fit for the intended purposes for which the materials are used, (c) within the variations permitted by the Agreement and are of even kind, quantity, and quality within each unit and among all units, (d) adequately contained, packaged and marked as the Agreement may require, and (e) conform to the Contractor's written promises or affirmations of fact.

5.46 Fitness. The Contractor warrants that any material supplied to City will fully conform to all requirements of the Agreement and all the Contractor's representations, and will be fit for all purposes and uses required by the Agreement.

5.47 Inspection/Testing. The warranties set forth in the Agreement are not affected by the City's inspection or testing of or payment for the materials by the City.

5.48 Packing and Shipping. The Contractor will be responsible for industry standard packing, which conforms to requirements of carrier's tariffs and Interstate Commerce Commission (ICC) regulations. Containers must be clearly marked as to lot number, destination, address, and purchase order number.

5.49 Delivery. All prices are F.O.B. Destination and include all delivery and unloading at the specified destinations. The Contractor will retain title and control of all goods until they are delivered and accepted by the City. All risk of transportation and all related charges will be the responsibility of the Contractor. All claims for visible or concealed damage will be filed by the Contractor. The City will notify the Contractor promptly of any damaged goods and will assist the Contractor in arranging for inspection.

5.50 Risk of Loss. The Contractor will bear all loss of conforming material covered under this Agreement until received by authorized personnel at the location designated in the purchase order or Agreement. Mere receipt does not constitute final acceptance. The risk of loss for nonconforming materials will remain with the Contractor regardless of receipt.

5.51 Current Products. All products offered in response to this solicitation will be in current and ongoing production; will have been formally announced for general marketing purposes; will be a model or type currently functioning in a user (paying customer) environment and capable of meeting or exceeding all specifications and requirements set forth in the City's solicitation.

5.52 Annual Usage Report. Upon request, the Contractor will furnish to the City an annual usage report delineating the acquisition activity governed by the Agreement. The format of the report will be approved by the City and will disclose the quantity and the dollar value of each agreement item by individual purchasing unit.

5.53 Catalogs/Agreement Price Listing. As applicable, the Contractor will furnish to all requesting departments catalogs at no cost, which will outline agreement prices.

5.54 Emergency Purchases. City reserves the rights to purchase from other sources those items, which are required on an emergency basis and cannot be supplied immediately by the Contractor.

5.55 Non-Exclusive Agreement. This agreement is for the sole convenience of the City of Chandler. The City reserves the right to obtain like goods or services from another source when necessary.

5.56 Budget Approval Into Next Fiscal Year. This Agreement will commence on the Effective Date and continue in full force and effect until it is terminated or expires in accordance with the provisions of this Agreement. The Parties recognize that the continuation of this Agreement after

the close of the City's fiscal year, which ends on June 30 of each year, is subject to the City Council's approval of a budget that includes an appropriation for this item as an expenditure. The City does not represent that this budget item will be actually adopted. This determination is solely made by the City Council at the time Council adopts the budget.

This Agreement shall be in full force and effect only when it has been approved and executed by the duly authorized City officials.

FOR THE CITY

By: _____

Its: _____Mayor_____

FOR THE CONTRACTOR

By: Orlando Ruelas

Its: Branch Manager

APPROVED AS TO FORM:

By: _____
City Attorney

ATTEST:

By: _____
City Clerk

EXHIBIT A TO AGREEMENT
SCOPE OF WORK

The City of Chandler (COC) is contracting for turnkey removal and replacement of activated carbon in odor scrubbing units at the OWRF and AWRF plants. The contractor will perform the following:

- Open activated carbon vessels
- Remove spent activated carbon from the beds
- Transport and dispose of carbon
- Clean vessels so that there is no carbon left in the containers and the containers are dry
- Install new activated carbon
- Close containers up

The container volumes are as follows:

Container Name	Location of Scrubber	Odor Scrubber Manufacture	Model	Amount of Carbon (ft3)	Type of Carbon	Scrubber Air Flow (Cfm)
OCS – 1 IPS	OWRF IPS	Evoqua	RJC-1300-D	403.8 (201.9 per chamber)	H2S specific	13,335
OCS – 2 Headworks	OWRF Headworks	EcoVerde	EG-12.7	678.6	H2S specific	17,700
Headworks OC	AWRF Headworks	Seimens LoPro	RJC-1200-D	678.6	H2S specific	17,700

Landfill: Removed carbon shall be delivered to Waste Management Butterfield Landfill, located at 40404 99th Ave, Maricopa, AZ 85139, and disponed under existing City Profile numbers. The City will pay disposal cost to Waste Management.

City Staff will be available to perform lock out tag out as requested by the Contractor.

Contractor shall complete each site within 30 days of notification.

Docusign Envelope ID: 63748EF3-0544-4D4D-B2EF-0A97E1CEDDC2

EXHIBIT B TO AGREEMENT
COMPENSATION AND FEES

Container Name	Location of Scrubber	Quantity Amount of Carbon (ft3)	Unit Price Price per (ft3)	Product Offered
OCS – 1 IPS	OWRF IPS	403.8	$125.60	COL-H2S 0.30
OCS – 2 Headworks	OWRF Headworks	678.6	$87.80	COL-H2S 0.30
Headworks OC	AWRF Headworks	678.6	$87.80	COL-H2S 0.30

Price shall include removal and installation

EXHIBIT C TO AGREEMENT
INSURANCE

General.

A. At the same time as execution of this Agreement, the Contractor shall furnish the City a certificate of insurance on a standard insurance industry ACORD form. The ACORD form must be issued by an insurance company authorized to transact business in the State of Arizona possessing a current A.M. Best, Inc. rating of A-7, or better and legally authorized to do business in the State of Arizona with policies and forms satisfactory to City. Provided, however, the A.M. Best rating requirement shall not be deemed to apply to required Workers' Compensation coverage.

B. The Contractor and any of its subcontractors shall procure and maintain, until all of their obligations have been discharged, including any warranty periods under this Agreement are satisfied, the insurances set forth below.

C. The insurance requirements set forth below are minimum requirements for this Agreement and in no way limit the indemnity covenants contained in this Agreement.

D. The City in no way warrants that the minimum insurance limits contained in this Agreement are sufficient to protect Contractor from liabilities that might arise out of the performance of the Agreement services under this Agreement by Contractor, its agents, representatives, employees, subcontractors, and the Contractor is free to purchase any additional insurance as may be determined necessary.

E. Failure to demand evidence of full compliance with the insurance requirements in this Agreement or failure to identify any insurance deficiency will not relieve the Contractor from, nor will it be considered a waiver of its obligation to maintain the required insurance at all times during the performance of this Agreement.

F. Use of Subcontractors: If any work is subcontracted in any way, the Contractor shall execute a written contract with Subcontractor containing the same Indemnification Clause and Insurance Requirements as the City requires of the Contractor in this Agreement. The Contractor is responsible for executing the Agreement with the Subcontractor and obtaining Certificates of Insurance and verifying the insurance requirements.

Minimum Scope and Limits of Insurance. The Contractor shall provide coverage with limits of liability not less than those stated below.

A. *Commercial General Liability-Occurrence Form*. Contractor must maintain "occurrence" form Commercial General Liability insurance with a limit of not less than $2,000,000 for each occurrence, $4,000,000 aggregate. Said insurance must also include coverage for products and completed operations, independent contractors, personal injury and advertising injury. If any Excess insurance is utilized to fulfill the requirements of this paragraph, the Excess

insurance must be "follow form" equal or broader in coverage scope than underlying insurance.

B. *Automobile Liability-Any Auto or Owned, Hired and Non-Owned Vehicles*
Vehicle Liability: Contractor must maintain Business/Automobile Liability insurance with a limit of $1,000,000 each accident on Contractor owned, hired, and non-owned vehicles assigned to or used in the performance of the Contractor's work or services under this Agreement. If any Excess or Umbrella insurance is utilized to fulfill the requirements of this paragraph, the Excess or Umbrella insurance must be "follow form" equal or broader in coverage scope than underlying insurance.

C. *Workers Compensation and Employers Liability Insurance*: Contractor must maintain Workers Compensation insurance to cover obligations imposed by federal and state statutes having jurisdiction of Contractor employees engaged in the performance of work or services under this Agreement and must also maintain Employers' Liability insurance of not less than $1,000,000 for each accident and $1,000,000 disease for each employee.

Additional Policy Provisions Required.

A. *Self-Insured Retentions or Deductibles*. Any self-insured retentions and deductibles must be declared and approved by the City. If not approved, the City may require that the insurer reduce or eliminate any deductible or self-insured retentions with respect to the City, its officers, officials, agents, employees, and volunteers.

1. The Contractor's insurance must contain broad form contractual liability coverage.

2. The Contractor's insurance coverage must be primary insurance with respect to the City, its officers, officials, agents, and employees. Any insurance or self-insurance maintained by the City, its officers, officials, agents, and employees shall be in excess of the coverage provided by the Contractor and must not contribute to it.

3. The Contractor's insurance must apply separately to each insured against whom claim is made or suit is brought, except with respect to the limits of the insurer's liability.

4. Coverage provided by the Contractor must not be limited to the liability assumed under the indemnification provisions of this Agreement.

5. The policies must contain a severability of interest clause and waiver of subrogation against the City, its officers, officials, agents, and employees, for losses arising from Work performed by the Contractor for the City.

6. The Contractor, its successors and or assigns, are required to maintain Commercial General Liability insurance as specified in this Agreement for a minimum period of three years following completion and acceptance of the Work. The Contractor must submit a Certificate of Insurance evidencing Commercial General Liability insurance

during this three year period containing all the Agreement insurance requirements, including naming the City of Chandler, its agents, representatives, officers, directors, officials and employees as Additional Insured as required.

7. If a Certificate of Insurance is submitted as verification of coverage, the City will reasonably rely upon the Certificate of Insurance as evidence of coverage but this acceptance and reliance will not waive or alter in any way the insurance requirements or obligations of this Agreement.

B. *Insurance Cancellation During Term of Contract/Agreement.*

1. If any of the required policies expire during the life of this Contract/Agreement, the Contractor must forward renewal or replacement Certificates to the City within ten days after the renewal date containing all the required insurance provisions.
2. Each insurance policy required by the insurance provisions of this Contract/Agreement shall provide the required coverage and shall not be suspended, voided or canceled except after 30 days prior written notice has been given to the City, except when cancellation is for non-payment of premium, then ten days prior notice may be given. Such notice shall be sent directly to Chandler Law-Risk Management Department, Post Office Box 4008, Mailstop 628, Chandler, Arizona 85225. If any insurance company refuses to provide the required notice, the Contractor or its insurance broker shall notify the City of any cancellation, suspension, non-renewal of any insurance within seven days of receipt of insurers' notification to that effect.

A. *City as Additional Insured*. The policies are to contain, or be endorsed to contain, the following provisions:

1. The Commercial General Liability and Automobile Liability policies are to contain, or be endorsed to contain, the following provisions: The City, its officers, officials, agents, and employees are additional insureds with respect to liability arising out of activities performed by, or on behalf of, the Contractor including the City's general supervision of the Contractor; Products and Completed operations of the Contractor; and automobiles owned, leased, hired, or borrowed by the Contractor.

2. The City, its officers, officials, agents, and employees must be additional insureds to the full limits of liability purchased by the Contractor even if those limits of liability are in excess of those required by this Agreement.

Docusign Envelope ID: 63748EF3-0544-4D4D-B2EF-0A97E1CEDDC2

EXHIBIT D TO AGREEMENT
SPECIAL CONDITIONS

NONE

City Council Memorandum Public Works & Utilities Memo No. CP26-020

Date: September 15, 2025
To: Mayor and Council
Thru: John M. Pombier, Acting City Manager
Dawn Lang, Deputy City Manager/CFO
Jeremy Abbott, Acting Public Works and Utilities Director
Daniel Haskins, Capital Projects Division Manager

From: Melanie Sikes, Principal Engineer
Subject: Professional Services Agreement No. WW2402.451, with Wilson Engineers, LLC, for the 101/202 Redundant 66-inch Sewer Line Construction Management Services

---

Proposed Motion:

Move City Council award Professional Services Agreement No. WW2402.451, to Wilson Engineers, LLC, for the 101/202 Redundant 66-inch Sewer Line Construction Management Services, in an amount not to exceed $2,414,865.

Background/Discussion:

In February 2018, Chandler's potable water distribution system experienced a large water main break northeast of Price Road and the Loop 101/202 Santan Freeway interchange. This water line was accessed, repaired, and ultimately put back into service. Findings from a subsequent water line assessment raised concerns about the large 66-inch sewer line that also exists adjacent to these water lines crossing under the freeway. This sewer line conveys wastewater flows from north Chandler south to the Ocotillo Water Reclamation Facility for treatment. This large sewer line was installed at the same time as the water main crossing during the construction of the freeway interchange. The city's 2018 Water, Wastewater, and Reclaimed Water Master Plan also analyzed this 66-inch sanitary sewer freeway crossing. The evaluation noted the lack of redundancy for the sanitary sewer system crossing the freeway from north to south and the need in the near future to rehabilitate the existing freeway sewer crossing. The project includes a new 66-inch diameter gravity sewer line segment (approximately 700

linear feet) and steel casing for protection under the Loop 202 Santan Freeway. Further, the project will include cured-in-place pipe lining of the existing 66-inch diameter sewer, 48-inch diameter sewer, and 30-inch diameter sewer.

The project scope of work consists of pre-construction assistance, construction management, construction inspection, utility coordination, permitting, materials testing, record drawings, and asset management update. The agreement completion time is 640 calendar days following Notice to Proceed.

A related Construction Agreement with B&F Contracting, Inc., for the 101/202 Redundant 66-inch Sewer Line, is also scheduled for this City Council meeting.

Evaluation:

The selection process was conducted in accordance with city policy and procedure and state law. Staff recommends approval of this agreement with Wilson Engineers, LLC, based on qualifications, relevant firm experience, team experience, project understanding, and project approach.

Fiscal Impact

Account No.	Fund Name	Program Name	Dollar Amount	CIP Funded Y/N
615.3910.6210.6WW694	Wastewater Operating	Santan Freeway Redundant 66-inch Se	$2,414,865.00	Y

Attachments

Agreement

Location Map

Docusign Envelope ID: A7B6C4E3-7188-4D37-84D4-B8F15495B921

PROFESSIONAL SERVICES AGREEMENT
CONSTRUCTION MANAGEMENT SERVICES

101/202 REDUNDANT 66-INCH SEWER LINE

PROJECT NO. WW2402.451

Council Date: September 18, 2025

THIS AGREEMENT ("Agreement") is made and entered into on the _____ day of _____, 2025 ("Effective Date"), by and between City of Chandler, an Arizona municipal corporation, ("City"), and Wilson Engineers, LLC**,** an Arizona limited liability company, ("Consultant") (City and Consultant may individually be referred to as "Party" and collectively referred to as "Parties").

RECITALS

A. City proposes to engage Consultant to provide construction management services for 101/202 Redundant 66-inch Sewer Line project ("Project") as more fully described in Exhibit "A" ("Services"), which is attached to and made a part of this Agreement by this reference.

B. Consultant is ready, willing, and able to provide the services described in **Exhibit "A"** for the compensation and fees set forth and as described in **Exhibit "B"**, which is attached to and made a part of this Agreement by this reference.

C. City desires to enter into an Agreement with Consultant to provide these services under the terms and conditions set forth in this Agreement.

AGREEMENT

NOW, THEREFORE, in consideration of the premises and the mutual promises contained in this Agreement, City and Consultant agree as follows:

SECTION I--CONSULTANT'S SERVICES

Consultant must perform the services described in **Exhibit "A"** to City's satisfaction within the terms and conditions of this Agreement and within the care and skill that a person who provides similar services in Chandler, Arizona exercises under similar conditions. All work or services furnished by Consultant under this Agreement must be performed in a skilled and workmanlike manner. All fixtures, furnishings, and equipment furnished by Consultant as part of the work or services under this Agreement must be new, or the latest model, and of the most suitable grade and quality for the intended purpose of the work or service.

SECTION II--PERIOD OF SERVICE

Consultant must perform the services described in **Exhibit "A"** for the term of this Agreement. Unless amended in writing by the Parties, the Agreement term expires 640 calendar days after the Notice to Proceed (NTP) Date.

SECTION III--PAYMENT OF COMPENSATION AND FEES

Unless amended in writing by the Parties, Consultant's compensation and fees as more fully described in **Exhibit "B"** for performance of the services approved and accepted by City under this Agreement must not exceed $2,414,865 for the full term of the Agreement. Consultant may not increase any compensation or fees under this Agreement without the City's prior written consent. Consultant must submit monthly requests for payment of services approved and accepted during the previous billing period and must include, as applicable, detailed invoices and receipts, a narrative description of the tasks accomplished during the billing period, a list of any deliverables submitted, and any subconsultant's or supplier's actual requests for payment plus similar narrative and listing of their work. Consultant must submit an Application and Certification for Payment Sheet with the monthly request for payment to: CapitalProjects.Payables@chandleraz.gov. Payment for those services negotiated as a lump sum will be made in accordance with the percentage of the work completed during the preceding billing period. Services negotiated as a not-to-exceed fee will be paid in accordance with the work effort expended on the service during the preceding month. All requests for payment must be submitted to City for review and approval. City will make payment for approved and accepted services within 30 calendar days of City's receipt of the request for payment. Consultant bears all responsibility and liability for any and all tax obligations that result from Consultant's performance under this Agreement.

SECTION IV--CITY'S OBLIGATIONS

As part of Consultant's services under this Agreement, City will provide furnished items, services, or obligations as detailed in **Exhibit "D"**.

SECTION V--GENERAL CONDITIONS

5.1 Notices. Unless otherwise provided herein, demands under this Agreement must be in writing and will be deemed to have been duly given and received either (a) on the date of service if personally served on the party to whom notice is to be given, or (b) on the third day after the date of the postmark of deposit by first class United States mail, registered or certified, postage prepaid and properly addressed as follows:

To City:	City of Chandler - Public Works & Utilities Department Attn: CIP City Engineer: Daniel Haskins, P.E. P.O. Box 4008, Mail Stop 407 Chandler, AZ 85244-4008 Phone: 480-782-3335 Email: Daniel.Haskins@chandleraz.gov	
With a copy to:	City of Chandler - Public Works & Utilities Department Attn: Raymond Potts, Project Manager P.O. Box 4008, Mail Stop 407, Chandler, AZ 85244-4008 Phone: 480-782-3326 Email: Raymond.Potts@chandleraz.gov	
To Consultant:	**LEGAL COMPANY NAME:**	Wilson Engineers, LLC
	Mailing Address:	1620 W. Fountainhead Parkway, Suite 501 Tempe, AZ 85282
	Physical Address:	1620 W. Fountainhead Parkway, Suite 501 Tempe, AZ 85282
	Statutory Agent Name:	Corporation Service Company
	Statutory Agent Mailing Address:	7955 South Priest Drive, Suite 102 Tempe, Arizona 85284
	Statutory Agent Physical Address:	7955 South Priest Drive, Suite 102 Tempe, Arizona 85284
	CONSULTANT'S AUTHORIZED PROJECT REPRESENTATIVE	
	Name:	Steve Todd
	Title:	Principal
	Phone:	480-893-8860
	Email:	Steve.Todd@wilson-engineers.com

5.2 Records/Audit. Records of Consultant's direct personnel payroll, reimbursable expenses pertaining to this Agreement and records of accounts between City and Consultant must be kept on the basis of generally accepted accounting principles and must be made available to City and its auditors for up to three years following City's final acceptance of the services under this Agreement (this requirement is increased to five years if construction of this project is federally funded). City, its authorized representative, or any federal agency, reserves the right to audit Consultant's records to verify the accuracy and appropriateness of all cost and pricing data, including data used to negotiate this Agreement and any amendments. City reserves the right to decrease the total amount of Agreement price or payments made under this Agreement or request reimbursement from Consultant following final Agreement payment on this Agreement if, upon audit of Consultant's records, the audit discloses Consultant has provided false, misleading, or inaccurate cost and pricing data. Consultant will include a similar provision in all of its Agreements with subconsultants who provide services under the Agreement to ensure that City, its authorized representative, or the appropriate federal agency, has access to the subconsultants' records to verify the

accuracy of all cost and pricing data. City reserves the right to decrease Agreement price or payments made on this Agreement or request reimbursement from Consultant following final payment on this Agreement if the above provision is not included in subconsultant agreements, and one or more subconsultants refuse to allow City to audit their records to verify the accuracy and appropriateness of all cost and pricing data. If, following an audit of this Agreement, the audit discloses Consultant has provided false, misleading, or inaccurate cost and pricing data, and the cost discrepancies exceed 1% of the total Agreement billings, Consultant will be liable for reimbursement of the reasonable, actual cost of the audit.

5.3 Alteration in Character of Work. Whenever an alteration in the character of work results in a substantial change in this Agreement, thereby materially increasing or decreasing the scope of services, cost of performance, or Project schedule, the work will be performed as directed by City. However, before any modified work is started, a written amendment must be approved and executed by City and Consultant. Such amendment must not be effective until approved by City. Additions to, modifications, or deletions from this Agreement as provided herein may be made, and the compensation to be paid to Consultant may accordingly be adjusted by mutual agreement of the Parties. It is distinctly understood and agreed that no claim for extra services or materials furnished by Consultant will be allowed by City except as provided herein, nor must Consultant do any work or furnish any materials not covered by this Agreement unless such work is first authorized in writing. Any such work or materials furnished by Consultant without prior written authorization will be at Consultant's own risk, cost, and expense, and Consultant hereby agrees that without written authorization Consultant will make no claim for compensation for such work or materials furnished.

5.4 Termination. City and Consultant hereby agree to the full performance of the covenants contained herein, except that City reserves the right, at its discretion and without cause, to terminate or abandon any service provided for in this Agreement, or abandon any portion of the Project for which services have been performed by Consultant. In the event City abandons or suspends the services, or any part of the services as provided in this Agreement, City will notify Consultant in writing and immediately after receiving such notice, Consultant must discontinue advancing the work specified under this Agreement. Upon such termination, abandonment, or suspension, Consultant must deliver to City all drawings, plans, specifications, special provisions, estimates and other work entirely or partially completed, together with all unused materials supplied by City. Consultant must appraise the work Consultant has completed and submit Consultant's appraisal to City for evaluation. City may inspect Consultant's work to appraise the work completed. Consultant will receive compensation in full for services performed to the date of such termination. The fee will be paid in accordance with Section Ill of this Agreement, and as mutually agreed upon by Consultant and City. If there is no mutual agreement on payment, the final determination will be made in accordance with the "Disputes" provision in this Agreement. However, in no event may the fee exceed the fee set forth in Section Ill of this Agreement nor as amended in accordance with Section "Alteration in Character of Work." City will make the final payment within 60 days after Consultant has delivered the last of the partially completed items and the Parties agree on the final fee. If City is found to have improperly terminated the Agreement for cause or default, the termination will be converted to a termination for convenience in accordance with the provisions of this Agreement.

5.5 Indemnification. To the extent permitted by law, the Consultant ("Indemnitor") must indemnify, save and hold harmless City and its officers, officials, agents and employees ("Indemnitee") from any and all claims, actions, liabilities, damages, losses or expenses (including court costs, attorneys' fees and costs of claim processing, investigation and litigation) ("Claims") caused or alleged to be caused, in whole or in part, by the wrongful, negligent or willful acts, or errors or omissions of Consultant or any of its owners, officers, directors, agents, employees, or subconsultants in connection with this Agreement. This indemnity includes any claim or amount arising out of or recovered under workers' compensation law or on account of the failure of Consultant to conform to any federal, state or local law, statute, ordinance, rule, regulation or court decree. Consultant must indemnify Indemnitee from and against any and all Claims, except those arising solely from Indemnitee's own negligent or willful acts or omissions. Consultant is responsible for primary loss investigation, defense and judgment costs where this indemnification applies. In consideration of the award of this Agreement, Consultant agrees to waive all rights of subrogation against Indemnitee for losses arising from or related to this Agreement. The obligations of Consultant under this provision survive the termination or expiration of this Agreement.

5.6 Insurance Requirements. Consultant must procure insurance under the terms and conditions and for the amounts of coverage set forth in **Exhibit "C"** against claims that may arise from or relate to performance of the work under this Agreement by Consultant and its agents, representatives, employees, and subconsultants. Consultant and any subconsultant must maintain this insurance until all of their obligations have been discharged, including any warranty periods under this Agreement. These insurance requirements are minimum requirements for this Agreement and in no way limit the indemnity covenants contained in this Agreement. City in no way warrants that the minimum limits stated in **Exhibit "C"** are sufficient to protect Consultant from liabilities that might arise out of the performance of the work under this Agreement by Consultant, Consultant's agents, representatives, employees, or subconsultants. Consultant is free to purchase such additional insurance as may be determined necessary.

5.7 Cooperation and Further Documentation. Consultant agrees to provide City such other duly executed documents as may be reasonably requested by City to implement the intent of this Agreement.

5.8 Successors and Assigns. City and Consultant each bind itself, its partners, successors, assigns, and legal representatives to the other party to this Agreement and to the partners, successors, assigns, and legal representatives of such other party in respect to all covenants of this Agreement. Neither City nor Consultant may assign, sublet, or transfer its interest in this Agreement without the written consent of the other party. In no event may any contractual relation be created between any third party and City.

5.9 Disputes. In any dispute arising out of an interpretation of this Agreement or the duties required not disposed of by agreement between Consultant and City, the final determination at the administrative level will be made by City Engineer.

5.10 Completeness and Accuracy of Consultant's Work. Consultant must be responsible for the completeness and accuracy of Consultant's services, data, and other work prepared or compiled under Consultant's obligation under this Agreement and must correct, at Consultant's expense, all willful or negligent errors, omissions, or acts that may be discovered. Correction of errors disclosed and determined to exist during any construction of the project on architectural or engineering drawings and specifications must be accomplished by Consultant. The cost of the design necessary to correct those errors attributable to Consultant and any damage incurred by City as a result of additional construction costs caused by such engineering or architectural errors will be chargeable to Consultant and will not be considered a cost of the Work. The fact that City has accepted or approved Consultant's work will in no way relieve Consultant of any of Consultant's responsibilities.

5.11 Reporting. Written monthly reports, along with updated work schedules, will be made by Consultant in the format prescribed by City. These reports will be delivered to City per schedule. When requested by City, Consultant will attend Council meetings and provide finished documents including correspondence for Council action, supporting charts, graphs, drawings and colored slides of same.

5.12 Withholding Payment. City reserves the right to withhold funds from Consultant's payments up to the amount equal to the claims City may have against Consultant until such time that a settlement on those claims has been reached.

5.13 City's Right of Cancellation. The Parties acknowledge that this Agreement is subject to cancellation by City under the provisions of Section 38-511, Arizona Revised Statutes (A.R.S.).

5.14 Independent Consultant. For this Agreement Consultant constitutes an independent contractor. Any provisions in this Agreement that may appear to give City the right to direct Consultant as to the details of accomplishing the work or to exercise a measure of control over the work means that Consultant must follow the wishes of City as to the results of the work only. These results must comply with all applicable laws and ordinances.

5.15 Project Staffing. Prior to the start of any work under this Agreement, Consultant must submit to City detailed resumes of key personnel that will be involved in performing services prescribed in the Agreement. City hereby acknowledges its acceptance of such personnel to perform services under this Agreement. At any time hereafter that Consultant desires to change key personnel while performing under the Agreement, Consultant must submit the qualifications of the new personnel to City for prior approval. Key personnel include, but are not limited to, principals-in-charge, project manager, and project Consultant. Consultant will maintain an adequate and competent staff of qualified persons, as may be determined by City, throughout the performance of this Agreement to ensure acceptable and timely completion of the Scope of Services. If City objects, with reasonable cause, to any of Consultant's staff, Consultant must take prompt corrective action acceptable to City and, if required, remove such personnel from the Project and replace with new personnel agreed to by City.

5.16 Consultants or Subconsultants. Prior to beginning the work, Consultant must furnish City for approval the names of consultants or subconsultants to be used under this Agreement. Any subsequent changes are subject to City's written prior approval.

5.17 Force Majeure. If either party is delayed or prevented from the performance of any act required under this Agreement by reason of acts of God or other cause beyond the control and without fault of the Party (financial inability excepted), performance of that act may be excused, but only for the period of the delay, if the Party provides written notice to the other Party within ten days of such act. The time for performance of the act may be extended for a period equivalent to the period of delay from the date written notice is received by the other Party.

5.18 Compliance with Federal Laws. Consultant understands and acknowledges the applicability of the Americans with Disabilities Act, the Immigration Reform and Control Act of 1986 and the Drug Free Workplace Act of 1989 to it. Consultant agrees to comply with these laws in performing this Agreement and to permit City to verify such compliance.

5.19 No Israel Boycott. By entering into this Agreement, Consultant certifies that Consultant is not currently engaged in, and agrees for the duration of the Agreement, not to engage in a boycott of Israel as defined by state statute.

5.20 Legal Worker Requirements. A.R.S. § 41-4401 prohibits City from awarding an Agreement to any consultant who fails, or whose subconsultants fail, to comply with A.R.S. § 23-214(A). Therefore, Consultant agrees Consultant and each subconsultant it uses warrants their compliance with all federal immigration laws and regulations that relate to their employees and their compliance with § 23-214, subsection A. A breach of this warranty will be deemed a material breach of the Agreement and may be subject to penalties up to and including termination of the Agreement. City retains the legal right to inspect the papers of any Consultant's or subconsultant's employee who provides services under this Agreement to ensure that Consultant and subconsultants comply with the warranty under this provision.

5.21 Lawful Presence Requirement. A.R.S. §§ 1-501 and 1-502 prohibit City from awarding an Agreement to any natural person who cannot establish that such person is lawfully present in the United States. To establish lawful presence, a person must produce qualifying identification and sign a City-provided affidavit affirming that the identification provided is genuine. This requirement will be imposed at the time of Agreement award. This requirement does not apply to business organizations such as corporations, partnerships, or limited liability companies.

5.22 Covenant Against Contingent Fees. Consultant warrants that no person has been employed or retained to solicit or secure this Agreement upon an agreement or understanding for a commission, percentage, brokerage, or contingent fee, and that no member of the Chandler City Council, or any City employee has any interest, financially, or otherwise, in Consultant's firm. For breach or violation of this warrant, City may annul this Agreement without liability or, at its discretion, to deduct from the Agreement price or consideration, the full amount of such commission, percentage, brokerage, or contingent fee.

5.23 Non-Waiver Provision. The failure of either Party to enforce any of the provisions of this Agreement or to require performance of the other Party of any of the provisions hereof must not be construed to be a waiver of such provisions, nor must it affect the validity of this Agreement or any part thereof, or the right of either Party to thereafter enforce each and

every provision.

5.24 Disclosure of Information Adverse to City's Interests. To evaluate and avoid potential conflicts of interest, Consultant must provide written notice to City, as set forth in this Section, of any work or services performed by Consultant for third parties that may involve or be associated with any real property or personal property owned or leased by City. Such notice must be given 7 business days prior to commencement of the services by Consultant for a third party, or 7 business days prior to an adverse action as defined below. Written notice and disclosure must be sent in accordance with Section 6.7 above. An adverse action under this Agreement includes, but is not limited to: (a) using data as defined in the Agreement acquired in connection with this Agreement to assist a third party in pursuing administrative or judicial action against City; or (b) testifying or providing evidence on behalf of any person in connection with an administrative or judicial action against City; or (c) using data to produce income for Consultant or its employees independently of performing the services under this Agreement, without the prior written consent of City. Consultant represents that except for those persons, entities, and projects identified to City, the services performed by Consultant under this Agreement are not expected to create an interest with any person, entity, or third party project that is or may be adverse to City's interests. Consultant's failure to provide a written notice and disclosure of the information as set forth in this Section constitute a material breach of this Agreement.

5.25 Data Confidentiality and Data Security. As used in the Agreement, "data" means all information, whether written or verbal, including plans, photographs, studies, investigations, audits, analyses, samples, reports, calculations, internal memos, meeting minutes, data field notes, work product, proposals, correspondence and any other similar documents or information prepared by, obtained by, or transmitted to Consultant or its subconsultants in the performance of this Agreement. The Parties agree that all data, regardless of form, including originals, images, and reproductions, prepared by, obtained by, or transmitted to Consultant or its subconsultants in connection with Consultant's or its subconsultant's performance of this Agreement is confidential and proprietary information belonging to City. Except as specifically provided in this Agreement, Consultant or its subconsultants must not divulge data to any third party without City's prior written consent. Consultant or its subconsultants must not use the data for any purposes except to perform the services required under this Agreement. These prohibitions do not apply to the following data provided to Consultant or its subconsultants have first given the required notice to City: (a) data which was known to Consultant or its subconsultants prior to its performance under this Consultant or its subconsultants by a third party, who to the best of Consultant's or its subconsultants' knowledge and belief, had the legal right to make such disclosure and Consultant or its subconsultants are not otherwise required to hold such data in confidence; or (c) data which is required to be disclosed by virtue of law, regulation, or court order, to which Consultant or its subconsultants are subject. In the event Consultant or its subconsultants are required or requested to disclose data to a third party, or any other information to which Consultant or its subconsultants became privy as a result of any other Agreement with City, Consultant must first notify City as set forth in this Section of the request or demand for the data. Consultant or its subconsultants must give City sufficient facts so that City can be given an opportunity to first give its consent or take such action that City may deem appropriate to protect such data or other information from disclosure. All data must continue to be subject to the confidentiality agreements of this Agreement. Consultant or its

subconsultants assume all liability to maintain the confidentiality of the data in its possession and agrees to compensate City if any of the provisions of this Section are violated by Consultant, its employees, agents or subconsultants. Solely for the purposes of seeking injunctive relief, it is agreed that a breach of this Section must be deemed to cause irreparable harm that justifies injunctive relief in court. Consultant agrees that the requirements of this Section must be incorporated into all subagreements entered into by Consultant. A violation of this Section may result in immediate termination of this Agreement without notice.

5.26 Personal Identifying Information-Data Security. Personal identifying information, financial account information, or restricted City information, whether electronic format or hard copy, must be secured and protected at all times by Consultant or its subconsultants. At a minimum, Consultant or its subconsultants must encrypt or password-protect electronic files. This includes data saved to laptop computers, computerized devices, or removable storage devices. When personal identifying information, financial account information, or restricted City information, regardless of its format, is no longer necessary, the information must be redacted or destroyed through appropriate and secure methods that ensure the information cannot be viewed, accessed, or reconstructed. In the event that data collected or obtained by Consultant or its subconsultants in connection with this Agreement is believed to have been compromised, Consultant or its subconsultants must immediately notify City contact. Consultant agrees to reimburse City for any costs incurred by City to investigate potential breaches of this data and, where applicable, the cost of notifying individuals who may be impacted by the breach. Consultant agrees that the requirements of this Section must be incorporated into all subcontracts entered into by Consultant. It is further agreed that a violation of this Section must be deemed to cause irreparable harm that justifies injunctive relief in court. A violation of this Section may result in immediate termination of this Agreement without notice. The obligations of Consultant or its subconsultants under this Section must survive the termination of this Agreement.

5.27 Jurisdiction and Venue. This Agreement is made under and must be construed in accordance with and governed by the laws of the State of Arizona without regard to the conflicts or choice of law provisions thereof. Any action to enforce any provision of this Agreement or to obtain any remedy with respect hereto must be brought in the courts located in Maricopa County, Arizona, and for this purpose, each Party hereby expressly and irrevocably consents to the jurisdiction and venue of such court.

5.28 Survival. All warranties, representations, and indemnifications by Consultant must survive the completion or termination of this Agreement.

5.29 Modification. Except as expressly provided herein to the contrary, no supplement, modification, or amendment of any term of this Agreement will be deemed binding or effective unless in writing and signed by the Parties.

5.30 Severability. If any provision of this Agreement or the application to any person or circumstance may be invalid, illegal or unenforceable to any extent, the remainder of this Agreement and the application will not be affected and will be enforceable to the fullest extent permitted by law.

5.31 Integration. This Agreement contains the full agreement of the Parties. Any prior or

contemporaneous written or oral agreement between the Parties regarding the subject matter is merged and superseded.

5.32 Time is of the Essence. Time of each of the terms, covenants, and conditions of this Agreement is hereby expressly made of the essence.

5.33 Date of Performance. If the date of performance of any obligation or the last day of any time period provided for should fall on a Saturday, Sunday, or holiday for City, the obligation will be due and owing, and the time period will expire, on the first day after which is not a Saturday, Sunday or legal City holiday. Except as may otherwise be set forth in this Agreement, any performance provided for herein will be timely made if completed no later than 5:00 p.m. (Chandler time) on the day of performance.

5.34 Third Party Beneficiary. Nothing under this Agreement will be construed to give any rights or benefits in the Agreement to anyone other than City and Consultant, and all duties and responsibilities undertaken pursuant to this Agreement will be for the sole and exclusive benefit of City and Consultant and not for the benefit of any other party.

5.35 Conflict in Language. All work performed must conform to all applicable City of Chandler codes, ordinances, and requirements as outlined in this Agreement. If there is a conflict in interpretation between provisions in this Agreement and those in **Exhibit "A"**, the provisions in this Agreement prevail.

5.36 Document/Information Release. Documents and materials released to Consultant, which are identified by City as sensitive and confidential, are City's property. The document/material must be issued by and returned to City upon completion of the services under this Agreement. Consultant secondary distribution, disclosure, copying, or duplication in any manner is prohibited without City's prior written approval. The document/material must be kept secure at all times. This directive applies to all City documents, whether in photographic, printed, or electronic data format.

5.37 Exhibits. The following exhibits are made a part of this Agreement and are incorporated by reference:

Exhibit A - Scope of Services / Schedule
Exhibit B - Compensation and Fees
Exhibit C - Insurance Requirements
Exhibit D - Special Conditions
Exhibit E – Subconsultant Documents with Consultant (if applicable)
Exhibit F - Federal Requirements (if applicable)

5.38 Special Conditions. As part of the services Consultant provides under this Agreement, Consultant agrees to comply with and fully perform the special terms and conditions set forth in **Exhibit "D"**, which is attached to and made a part of this Agreement.

5.39 Non-Discrimination and Anti-Harassment Laws. Consultant must comply with all applicable City, state, and federal non-discrimination and anti-harassment laws, rules, and regulations.

5.40 Licenses and Permits. Beginning with the Effective Date and for the full term of this Agreement, Consultant must maintain all applicable City, state, and federal licenses and permits required to fully perform Consultant's services under this Agreement.

5.41 Warranties. Consultant must furnish a one-year warranty on all work and services performed under this Agreement. Consultant must furnish, or cause to be furnished, a two-year warranty on all fixtures, furnishings, and equipment furnished by Consultant, subconsultants or suppliers under this Agreement. Any defects in design, workmanship, or materials that do not comply with this Agreement must be corrected by Consultant (including, but not limited to, all parts and labor) at Consultant's sole cost and expense. All written warranties and redlines for as-built conditions must be delivered to City on or before City's final acceptance of Consultant's services under this Agreement.

5.42 Cooperative Purchasing Agreement (S.A.V.E. – Strategic Alliance for Volume Expenditures). In addition to City of Chandler and with the approval of Consultant, this Agreement may be extended for use by other municipalities, school districts, and government agencies of the State. Any such usage by other entities must be in accordance with the ordinance, charter, or procurement rules and regulations of the respective political entity.

5.43 Budget Approval into Next Fiscal Year. This Agreement will commence on the Effective Date and continue in full force and effect until it is terminated or expires in accordance with the provisions of this Agreement. The Parties recognize that the continuation of this Agreement after the close of the City's fiscal year, which ends on June 30 of each year, is subject to the City Council's approval of a budget that includes an appropriation for this item as an expenditure. The City does not represent that this budget item will be actually adopted. This determination is solely made by the City Council.

5.44 Forced Labor of Ethnic Uyghurs Prohibited. By entering into this Agreement, Contractor certifies and agrees Contractor does not currently use and will not use for the term of this Agreement: (i) the forced labor of ethnic Uyghurs in the People's Republic of China; or (ii) any goods or services produced by the forced labor of ethnic Uyghurs in the People's Republic of China; or (iii) any contractors, subcontractors or suppliers that use the forced labor or any goods or services produced by the forced labor of ethnic Uyghurs in the People's Republic of China.

5.45 License to City for Reasonable Use. With this Agreement, Consultant and its subconsultants hereby grant a license to City, its agents, employees, and representatives for an indefinite period of time to reasonably use, make copies, and distribute as appropriate the Documents, works or deliverables developed or created as a result of the Project and this Agreement. This license also includes the making of derivative works.

This Agreement will be in full force and effect only when it has been approved and executed by the duly authorized City officials.

IN WITNESS WHEREOF, the Parties have executed this Agreement as of the Effective Date.

"CITY"
CITY OF CHANDLER

Mayor

RECOMMENDED BY:

Daniel Haskins August 13, 2025
Daniel Haskins, P.E.
CIP City Engineer

APPROVED AS TO FORM:

City Attorney

ATTEST:

City Clerk Seal

"CONSULTANT"
WILSON ENGINEERS, LLC

Stephen Todd August 13, 2025
Signature Date

Stephen Todd
Print Name

Principal
Title

steve.todd@wilson-engineers.com
Signer Email Address

Docusign Envelope ID: A7B6C4E3-7188-4D37-84D4-B8F15495B921

EXHIBIT "A"
SCOPE OF SERVICES/SCHEDULE

Docusign Envelope ID: A7B6C4E3-7188-4D37-84D4-B8F15495B921

EXHIBIT "A"

CONSTRUCTION MANAGEMENT
SCOPE OF SERVICES
WW2402.451 - 101/202 Redundant 66-inch Sewer Line
(NOT TO EXCEED)

PROJECT DESCRIPTION

Construction Management (CM) Services which include Post-Design Services for the redundant 66-inch diameter gravity sewer line segment and steel casing for protection under the Loop 202 Santan Freeway and sewer rehabilitation of 66-inch, 48-inch, and 30-inch diameter gravity sewers. Services included will be pre-construction assistance and additional design, Construction Management and Inspection, and Engineering Support Services during construction to address issues and/or specialized technical products and preparation of as-built record drawings.

PROJECT TASKS

1. PRE-CONSTRUCTION ASSISTANCE

A. Task 1.1 Preconstruction Assistance

i. Cost Model and GMP Review

1. Review of 90% cost model, GMP proposal, provide necessary comments to third party estimator.
2. Attendance at cost model discussions
3. Statement of Qualifications review and evaluation for boring services subcontractor

ii. Consultant must attend the pre-construction meeting.

1. Attendance at the pre-construction meeting

B. Task 1.2 Supplementary Survey and Pecos Diversion Structure Rehabilitation

i. Wilson Engineers will prepare design drawings and specifications related to the rehabilitation of the Pecos Diversion Structure, which was not included in the Design Services contract. Survey efforts are related to confirming existing manhole inlet and outlet elevations as well as identifying proposed sewer locations on the north and south sides of the freeway. Services that are provided by 3rd party surveying company are included in allowances. Design details and related services will include the following:

1. Site investigation to review the current configuration of the gates and electrical actuators that are to be replaced at the Pecos Diversion Structure.
2. Prepare design drawings for replacement of the slide gates and actuators on the 48" and 30" diameter Sanitary Sewer at the Pecos Diversion Structure. Drawings to include plan and sections of the

Docusign Envelope ID: A7B6C4E3-7188-4D37-84D4-B8F15495B921

diversion structure, coating additions, and electrical, instrumentation and control drawings (as required).

3. Prepare preliminary plan and section drawings for the addition of a 30" diameter overflow line and manhole. The manhole addition will be provided as part of the final design documents. The final design will not include the addition of the overflow line.
4. Prepare details for the addition of an anti-climb device at the diversion structure site.

2. CONSTRUCTION MANAGEMENT

A. Task 2.1 Weekly Construction Meetings

i. Wilson Engineers will prepare and conduct weekly construction meetings. Each meeting includes agenda and minutes; Request for Information (RFI); Shop Drawing; Request for Information (RFI); Field Directive (FD); Material Certification; and Allowance Logs. Wilson assumes **80** weekly meetings will be held.

ii. **Additional meetings to include:**

1. Project coordination and controls meeting to set up protocols for documentation
2. Coordination meetings with the city as appropriate
3. Coordination with regulatory and approving agencies

B. Task 2.2 CPM Schedule

i. Wilson Engineers' opinions concerning various scheduling documents produced or used by the Contractor are for information and not controlling on the Contractor. It is Contractor's responsibility to continue to exercise its independent judgement concerning means, methods and sequences of construction it employs. The Contractor remains solely responsible for meeting contract time(s) identified in the construction documents.

ii. Wilson Engineers must review and evaluate Contractor's initial CPM schedule and provide recommendations for acceptance.

iii. Wilson Engineers must review Contractor's monthly CPM schedule updates submitted with each payment application, identify CPM tasks behind schedule that may affect critical path items, project substantial and final completion dates, and initiate correspondence to city regarding those tasks. Consultant assumed **18** CPM schedules. Wilson Engineers will provide support as requested. Wilson Engineers will meet monthly with the city and Contractor to review the schedule data.

iv. Wilson Engineers will review look-ahead schedules provided by Contractor for weekly progress meetings for compliance with CPM schedule (80 total).

Docusign Envelope ID: A7B6C4E3-7188-4D37-84D4-B8F15495B921

C. Task 2.3 Requests for Information (RFI's)

i. Wilson Engineers must review, prepare and maintain a log of all RFI's, as needed.

ii. Wilson Engineers must receive, review, evaluate, and respond to any contractor Requests for Information (RFI's); prepare and maintain a log of all RFIs. Consultant assumes fifty (**50)** RFIs.

D. Task 2.4 Shop Drawing Submittals

i. Wilson Engineers will review and prepare and maintain a log of all shop drawing submittals showing dates of submittal, transmittal action to other sub-consultants, dates of return, and review action. Copies of the log are for internal management of documentation and may be furnished to the city and Contractor weekly to ensure records for all parties are consistent.

ii. Wilson Engineers must receive, review, evaluate, and respond to any Contractor Shop Drawing submittals, samples, test results, and other data which Contractor is required to submit. Consultant assumes seventy (70) submittals, with 50% requiring re-submittal and a second review, for a total of **105** submittals.

E. Task 2.5 Requests for Proposal (RFP)

i. Wilson Engineers must prepare Requests for Proposal (RFP) documents detailing requested additional work tasks; review and evaluate Contractor RFP responses (cost derivation) with approval recommendations; and prepare and maintain a log of all RFPs. Consultant assumes **15** RFPs.

F. Task 2.6 Field Directives (FD's)

i. Wilson Engineers must prepare Field Directive (FD) documents detailing requested additional work tasks; review and evaluate Contractor FD responses with approval recommendations; and prepare and maintain a log of all FDs. Consultant assumes **15** FD's.

G. Task 2.7 Contractor Payment Applications

i. Wilson Engineers will review and provide comments for the preliminary and final schedule of values (SOV) submitted by the Contractor for compliance with the contract documents and to ensure it includes an appropriate amount of detail to be used for monthly billing purposes.

ii. Wilson Engineers must review and evaluate Contractor monthly payment applications and make recommendations for payment; maintain a weekly record of constructed pay quantities and compile monthly totals; and coordinate payment application with the city quantity report and the inspectors' daily logs. Consultant assumes a maximum of **18** payment applications, with **2** reviews each.

Docusign Envelope ID: A7B6C4E3-7188-4D37-84D4-B8F15495B921

H. Task 2.8 Manufacturer Operation and Maintenance Manuals

i. Wilson Engineers will review, evaluate, and respond to any Operation and Maintenance Manuals submitted by the Contractor. It is expected that the Contractor will furnish manufacturer's manuals for stop logs, lifting beam assembly, and davit crane prior to installation of the respective equipment. A list of manufacturer operation and maintenance manuals will be maintained by the ENGINEER as the information is submitted by the Contractor.

1. Consultant assumes three **(3)** O&M's will be required

3. CONSTRUCTION INSPECTION

A. Task 3.1 Inspection Services (Wilson staff)

i. The Wilson construction management staff will maintain a presence at the Project site with sufficient frequency to be knowledgeable about the progress and quality of the work to:

A) Conduct on-site inspections of the work in progress to assist the engineer in determining if the work is proceeding in accordance with the construction documents and that completed work conforms to the construction documents.

B) Report to the engineer and City of Chandler Construction Manager whenever it is believed that any work is unsatisfactory, faulty, or defective, or does not conform to the construction documents, or does not meet the requirements of inspections, tests or approval required to be made, or has been damaged prior to final payment; and advise the engineer when it is believed work should be corrected or rejected or should be uncovered for inspection, or requires special testing, inspection or approval.

C) Verify that tests, equipment, and systems start-up and operating and maintenance instructions are conducted as required by the construction documents and in the presence of the required personnel, and that Contractor maintains adequate records thereof; inspect, record and report to the engineer appropriate details relative to the test procedures and start-ups. Accompany visiting inspectors representing public or other agencies having jurisdiction over the Project, record the outcome of these inspections, and report to the engineer.

D) Coordinate with subconsultant for NACE inspections required to be performed on coatings for manholes, junction structures, and any miscellaneous areas required coatings.

E) Prepare daily reports recording Contractor's work performed on the job site. Daily reports to include information such as photos of the work, general weather conditions, location and description of work being performed, approximate quantities completed, a list of Contractor's daily workforce onsite, subcontractors on site, major construction equipment observed to be on site, data relative to

Docusign Envelope ID: A7B6C4E3-7188-4D37-84D4-B8F15495B921

questions of extras or deductions, list of visiting officials and representatives of manufacturers, fabricators, suppliers and distributors, decisions, inspections in general, and specific inspections in detail as to inspecting test procedures.

ii. Wilson Engineers must provide construction inspections to verify materials and installations conform to construction documents; prepare daily inspection reports documenting Contractor construction activities and progress during field inspection visits; and perform intermittent erosion control inspections.
    1. Consultant assumes **1** civil inspector full time 50 hours per week for **18** months. Additional CM and design staff will be provided to support inspection needs as required.

iii. Wilson Engineers will provide special inspections as required for structural work performed on the project. Inspections and structural observations will be in accordance with the International Building Code (IBC). Certified Welding Inspections (CWI) will be provided in accordance with American Welding Society (AWS)
    1. Consultant assumes **1** special structural special inspector part time for **4** months.

iv. Wilson Engineers will perform inspections and observe CIPP lining operation to include preparatory work, verify proper materials, observe installation process to verify adherence to manufacturer guidelines, inspect integrity and uniformity of the lining.
    1. Consultant assumes **1** NASSCO certified CIPP lining inspector full time 50 hours per week for **4** months. Additional CM and design staff will be provided to support CIPP lining inspection needs as required.

v. Overtime, standard rate, 1½ time, etc. included for weekend/night work.

vi. Landscape/Irrigation inspection services included here. (South side trees)

B. Task 3.2 Jack & Bore Inspection Services (Wilson staff)

i. It is anticipated that TBM will be utilized for the jack and bore to accomplish the scope and is dependent on the selected subcontractor. Depending on the Acceptance of the Jack & Bore procedures, there are items that will need to be verified throughout the process:
    1. Layout and verification of the Jack & Bore pits locations based on the approved method and design drawings.
    2. Observations of the bore progress for alignment and grade will need to be performed to confirm that all existing utilities are not being jeopardized due to creep during the Jack & Bore progress.
    3. Inspections for all field welding of casing pipe sections prior to jacking that section of pipe. Confirm that welders have proper certifications and procedures for casing pipe welding.
    4. Once Jack & Bore is complete, all final verifications of the casing alignment and grade will be confirmed and documented prior to carrier pipe being installed.

Docusign Envelope ID: A7B6C4E3-7188-4D37-84D4-B8F15495B921

5. Observation of carrier pipe installation to confirm all skids/supports are installed correctly and not damaged during installation into casing.
6. Witness and document all final pressure/vacuum testing on the carrier pipe.
7. Witness and document bulkhead installations to confirm it adheres to approved standards.
8. Witness and document all annular space void filling and confirm that all void areas have been filled per the approved project documents.
9. Daily Reports will be provided when Jack & Bore inspection services are performed.

ii. Wilson assumes **1** Jack and Bore special inspector full time for **24** weeks. Additional CM and design staff will be provided to support Jack and Bore inspection needs as required.

C. Task 3.3 FRP Inspection Services (Wilson staff)

i. Perform inspections on manholes that are to be FRP lined.
   1. Perform pre-installation review and visual inspection to verify all preparatory work meets specified standards.
   2. Ensure that FRP coatings comply with project specifications and quality requirements.
   3. Observe FRP application process and testing performed by Contractor in accordance with the specifications and to confirm adherence to manufacture guidelines. Provide daily reports when FRP lining is inspected.
   4. Coordinate with NACE III subconsultant for additional inspections as necessary.

ii. Wilson assumes **1** FRP lining inspector part time for **16** weeks.

D. Task 3.4 Project Closeout

i. Wilson Engineers must compile non-conformance list prior to Substantial Completion; schedule and conduct Substantial Completion inspection; prepare Substantial Completion punch list generated from Substantial Completion inspection; track items on punch list and note completed items; and complete and distribute Substantial Completion certificates.

ii. Wilson Engineers must schedule and conduct Final Completion inspection; and complete and distribute Final Completion certificates.

iii. Wilson Engineers must provide all documents in an electronic version that matches the city's filing system, so it can be imported into city's files.
   1. The project documents shall include, but is not all inclusive, the following documents, organized by folders on approved electronic media:
      a. General Correspondence
      b. Test Results
         i. Equipment (pumps, motors, etc.)

Docusign Envelope ID: A7B6C4E3-7188-4D37-84D4-B8F15495B921

ii. Electrical/I&C
iii. Bacteriological
iv. Asphalt
v. Concrete
vi. Compaction
vii. Pressure
viii. Leak
ix. Continuity
x. Adhesion/Bond
xi. Coating Thickness

c. Field Directives (FD)
d. Change Orders
e. Approved Submittals and Final Shop Drawings
f. RFIs
g. Green Tags/Permits/ATC/AOC
h. Photos
i. Pre and post inspection video
j. Schedules
k. Public Outreach
l. Warranties
m. Operation and Maintenance Manuals
n. Daily Reports
o. Meeting Minutes

iv. Wilson Engineers must participate in a meeting with city staff to review request for information log to discuss lessons learned during construction.

4. UTILITY COORDINATION

A. Task 4.1 Utility Coordination

i. Wilson Engineers must complete the Approval of Construction (AOC) application and all other necessary documents to obtain MCESD AOC approval.
ii. Wilson Engineers must coordinate with Utility companies (ADOT and SRP) during construction. Wilson will also coordinate with and assist Public Outreach firm to keep utility stakeholders informed of the project status.

5. MATERIALS TESTING

A. Task 5.1 Verify Quality Control (QC) Test Program

i. Wilson Engineers must review and verify Contractor's Quality Control material test type and frequencies to ensure they are consistent with city and MAG specifications; review and evaluate Contractor's QC test schedule and provide recommendations on acceptance; and review and evaluate all Contractor sampling, test, and inspection results for conformance with construction documents. Testing will be performed as follows:

Docusign Envelope ID: A7B6C4E3-7188-4D37-84D4-B8F15495B921

1. Soils Testing
2. Concrete placements
3. Manhole Testing
4. Additional Testing (as required)

6. RECORD DRAWINGS

A. **Task 6.1 Record Drawings**

i. Wilson Engineers must review and monitor Contractor's updates on red line drawing set. Wilson Engineers will meet monthly with the CMAR Contractor.

ii. Wilson Engineers must transfer red-line comments to city's construction plans to create record drawings.

iii. Wilson Engineers must provide resident engineer stamp/certification on record drawings sheets. Ensure all required signatures on the cover sheet.

iv. Wilson Engineers must provide and deliver record drawings in digital pdf format to the city's construction manager as required for as-built submittal process 30 days after the contractor provides final approved redline drawing documents and information.

v. Record drawings will be provided in CADD and pdf format.

1. One 11 x 17 hard copy of drawings

7. ASSET MANAGEMENT UPDATE

A. **Task 7.1 Update Asset Spreadsheet**

Wilson will prepare an Excel file as-built spreadsheet showing pipes and manholes rehabilitated, including EID and rehabilitation completed during construction and provide a copy to the city's construction manager 30 days after substantial completion.

8. ALLOWANCES:

Allowance No. 1 - NACE III Coatings Inspections (RFI Consultants)

Wilson Engineers will retain a NACE Coatings Inspection firm to provide 3rd Party inspection of coatings for manholes, concrete junction structures, and miscellaneous areas requiring coatings as needed.

Allowance No. 2 - Reimbursables

Reimbursable expenses have been identified for this assignment as follows:

1. Mail and Courier
2. Reproduction
3. Scanning/Digitizing
4. Special Meeting/Presentation
5. Survey Subconsultant invoices

Allowance No. 3 – Owner's Allowance

Docusign Envelope ID: A7B6C4E3-7188-4D37-84D4-B8F15495B921

ASSUMPTION, CLARIFICATIONS, AND EXCLUSIONS

1. Application fees for city reviews and permits will be paid by city.
2. The Owner's Allowance will only be utilized with prior written approval from the city representative.
3. The Direct Expense Allowance will be used for normal reimbursable expenses on the project. Items must be billed at cost and backup must be provided with pay applications.

Docusign Envelope ID: A7B6C4E3-7188-4D37-84D4-B8F15495B921

EXHIBIT "B"
COMPENSATION AND FEES

Docusign Envelope ID: A7B6C4E3-7188-4D37-84D4-B8F15495B921

WILSON ENGINEERS

1620 West Fountainhead Parkway, Suite 501
Tempe, AZ 85282
480-893-8860 | 480-893-8968 Fax
Wilson-Engineers.com

EXHIBIT "B"
CONSTRUCTION MANAGEMENT
SCOPE OF SERVICES
FEE SCHEDULE
WW2402.451 - 101/202 Redundant 66-inch Sewer Line
(NOT TO EXCEED)

Task	Description	Cost
1	**PRE-CONSTRUCTION ASSISTANCE**	
1.1	Pre-Construction Assistance	$ 22,300.00
1.2	Supplementary Survey / Pecos Diversion Structure Rehabilitation Design	$ 35,090.00
	SUBTOTAL TASK 1:	**$ 57,390.00**
2	**CONSTRUCTION MANAGEMENT**	
2.1	Construction Meetings	$ 213,140.00
2.2	CPM Schedule	$ 54,515.00
2.3	Requests for Information (RFI)	$ 46,380.00
2.4	Shop Drawing Submittals	$ 94,380.00
2.5	Requests for Proposal (RFP)	$ 25,780.00
2.6	Field Directive (FD)	$ 47,460.00
2.7	Contractor Payment Applications	$ 40,660.00
2.8	Manufacturer's Operation and Maintenance Manuals (O&Ms)	$ 2,760.00
	SUBTOTAL TASK 2:	**$ 525,075.00**
3	**CONSTRUCTION INSPECTION**	
3.1	Inspection Services (Civil, CIPP, CWI, and Spec. Struct. Insp)	$ 1,231,740.00
3.2	Jack & Bore Inspection Services	$ 278,400.00
3.3	FRP Lining Inspection	$ 34,480.00
3.4.1	Substantial / Final Completion	$ 13,920.00
3.4.2	Project Documentation / Closeout	$ 19,590.00
3.4.3	Lessons Learned	$ 6,870.00
	SUBTOTAL TASK 3:	**$ 1,585,000.00**

Docusign Envelope ID: A7B6C4E3-7188-4D37-84D4-B8F15495B921

WILSON ENGINEERS

1620 West Fountainhead Parkway, Suite 501
Tempe, AZ 85282
480-893-8860 | 480-893-8968 Fax
Wilson-Engineers.com

4	**UTILITY COORDINATION**		
4.1	AOC Application to MCESD	$	5,250.00
4.2	Coordination with Utility Representatives (SRP / ADOT)	$	29,440.00
	SUBTOTAL TASK 4:	**$**	**34,690.00**
5	**MATERIALS TESTING**		
5.1	Verify Contractor's Materials Testing (QC) Program	$	14,680.00
5.2	Review Contractor's QC Test Results	$	15,160.00
	SUBTOTAL TASK 5:	**$**	**29,840.00**
6	**RECORD DRAWINGS**		
6.1	Review / Verify Contractor Redlines	$	19,130.00
6.2	Record Drawings	$	25,180.00
	SUBTOTAL TASK 6:	**$**	**44,310.00**
7	**ASSET MANAGEMENT UPDATE**		
7.1	Update CMMS	$	3,360.00
	SUBTOTAL TASK 7:	**$**	**3,360.00**
ALLOWANCES			
NACE III Inspections Allowance		$	25,200.00
Direct Expense Allowance		$	10,000.00
Owner's Allowance		$	100,000.00
	SUBTOTAL ALLOWANCES:	**$**	**135,200.00**
	PROJECT TOTAL:	**$**	**2,414,865.00**

Docusign Envelope ID: A7B6C4E3-7188-4D37-84D4-B8F15495B921

EXHIBIT "B"
CONSTRUCTION MANAGEMENT
SCOPE OF SERVICES
101 / 202 REDUNDANT 66-INCH SEWER LINE
FEE SCHEDULE

TASK No.		Principal	Sr Const Mgr/Sr. Elect PM	Sr PM / Civil / Struct	Const. PM	Sr. Engineer / RPR	Project Engineer	Sr. Insp / Spec Insp	Senior CADD Tech	Senior Admin	<PROJECT ROLE
		Phil Noonan	David Markert / Dave Corrie / Jaco Kruger	Chris Yarn	Jeff Johannes	Harsha Sharma	Santos Reyes / Megan South / Preston Lohr	Kristen Bowers/ Paul Cooper / Amelia Fuller	Kam Casey / Amber Andrade	Brandy Nixon	<NAME OF PERSON
		$280	$260	$240	$225	$200	$160	$160	$135	$115	<HOURLY RATES
	TASK DESCRIPTION										**TOTAL HOURS PER TASK**
1.0	**Preconstruction Assistance**	**4**	**20**	**4**	**60**	**90**	**56**	**8**	**62**	**0**	**304**
1.1	Preconstruction Assistance	2	16	4	60	6	4	8	0	0	100
1.2	Supplementary Survey / Pecos Diversion Structure Rehab Design	2	4	0	0	84	52	0	62	0	204
2.0	**Construction Management**	**78**	**246**	**160**	**739**	**493**	**589**	**100**	**46**	**170**	**2621**
2.1	Conduct Construction Meetings	32	170	98	348	198	96	20	0	0	962
2.2	Review Contractors CPM Schedule, Updates, Look Ahead	4	20	6	179	18	0	18	0	0	245
2.3	Request for Information (RFIs)	10	8	16	10	75	105	6	6	16	252
2.4	Shop Drawing Submittals	20	12	24	24	100	240	0	0	140	560
2.5	Request for Proposals (RFP)	8	8	4	40	20	40	4	0	4	128
2.6	Field Directives (FD)	4	8	12	20	60	100	16	40	8	268
2.7	Contractor Payment Applications	0	20	0	116	18	0	36	0	0	190
2.8	Manufacturer's Operation and Maintenance Manuals (O&Ms)	0	0	0	2	4	8	0	0	2	16
3.0	**Construction Inspection**	**29**	**458**	**75**	**996**	**426**	**611**	**6446**	**0**	**12**	**9053**
3.1	Construction Inspection, CWI, CIPP lining, and Struct. Special Inspection	24	352	72	844	322	367	5020	0	0	7001
3.2	Jack and Bore Inspection	4	96	0	96	72	152	1200	0	0	1620
3.3	FRP Lining Inspection	0	4	0	0	4	12	192	0	0	212
3.4.1	Substantial Completion / Final Completion / Punch List	0	2	0	24	8	24	16	0	0	74
3.4.2	Project Documentation / Closeout	0	2	2	26	12	40	16	0	12	110
3.4.3	Lessons Learned	1	2	1	6	8	16	2	0	0	36
4.0	**Utility Coordination**	**2**	**8**	**0**	**50**	**24**	**80**	**20**	**0**	**0**	**184**
4.1.1	AOC Applications to MCESD	0	0	0	2	8	16	4	0	0	30
4.1.2	Coordinate Utility Representatives (SRP and ADOT)	2	8	0	48	16	64	16	0	0	154
5.0	**Materials Testing and Quality Assurance (QA)**	**2**	**8**	**6**	**32**	**16**	**32**	**64**	**0**	**0**	**160**
5.1.1	Verify Contractor's Material Test type and Frequency Meet Requirements	1	4	2	16	8	16	32	0	0	79
5.1.2	Review Contractor's QC Test Schedule, Samples, Test Results	1	4	4	16	8	16	32	0	0	81
6.0	**Record Drawings**	**0**	**4**	**4**	**22**	**24**	**50**	**86**	**80**	**0**	**270**
6.1.1	Review and Monitor Contractor Redlines	0	2	2	18	0	10	78	0	0	110
6.1.2	Prepare Record Drawings / Certification / Turnover	0	2	2	4	24	40	8	80	0	160
7.0	**Asset Management Update**	**0**	**0**	**0**	**0**	**4**	**16**	**0**	**0**	**0**	**20**
7.1	Update Asset Spreadsheet	0	0	0	0	4	16	0	0	0	20
	TOTAL HOURS	**115**	**744**	**249**	**1899**	**1077**	**1434**	**6724**	**188**	**182**	**12612**

Docusign Envelope ID: A7B6C4E3-7188-4D37-84D4-B8F15495B921

EXHIBIT "C"
INSURANCE REQUIREMENTS

1. General.

1.1 At the same time as execution of this Agreement, Consultant must furnish City a certificate of insurance on a standard insurance industry ACORD form. The ACORD form must be issued by an insurance company authorized to transact business in the State of Arizona possessing a current A.M. Best, Inc. rating of A-7, or better and legally authorized to do business in the State of Arizona with policies and forms satisfactory to City. Provided, however, the A.M. Best rating requirement will not be deemed to apply to required Workers' Compensation coverage.

1.2 Consultant and any of its subconsultants must procure and maintain, until all of their obligations have been discharged, including any warranty periods under this Agreement are satisfied, the insurances set forth below.

1.3 The insurance requirements set forth below are minimum requirements for this Agreement and in no way limit the indemnity covenants contained in this Agreement.

1.4 City in no way warrants that the minimum insurance limits contained in this Agreement are sufficient to protect Consultant from liabilities that might arise out of the performance of the Agreement services under this Agreement by Consultant, its agents, representatives, employees, subconsultants, and Consultant is free to purchase any additional insurance as may be determined necessary.

1.5 Failure to demand evidence of full compliance with the insurance requirements in this Agreement or failure to identify any insurance deficiency will not relieve Consultant from, nor will it be considered a waiver of its obligation to maintain the required insurance at all times during the performance of this Agreement.

1.6 Use of subconsultants: If any work is subcontracted in any way, Consultant must execute a written Agreement with subconsultant containing the same Indemnification Clause and Insurance Requirements as City requires of Consultant in this Agreement. Consultant is responsible for executing the Agreement with the subconsultant and obtaining Certificates of Insurance and verifying the insurance requirements.

2. Minimum Scope and Limits of Insurance. Consultant must provide coverage with limits of liability not less than those stated below.

2.1 *Professional Liability.* If the Agreement is the subject of any professional services or work performed by Consultant, or if Consultant engages in any professional services or work adjunct or residual to performing the work under this Agreement, Consultant must maintain Professional Liability insurance covering errors and omissions arising out of the work or services performed by Consultant, or anyone employed by Consultant, or anyone whose acts, mistakes, errors and omissions Consultant is legally liable, with a liability limit of $1,000,000 each claim and $2,000,000 all claims. In the event the Professional Liability

insurance policy is written on a "claims made" basis, coverage must extend for 3 years past completion and acceptance of the work or services, and Consultant, or its selected Design Professional will submit Certificates of Insurance as evidence the required coverage is in effect. The Design Professional must annually submit Certificates of Insurance citing that the applicable coverage is in force and contains the required provisions for a 3 year period.

2.2 *Commercial General Liability-Occurrence Form.* Consultant must maintain "occurrence" form Commercial General Liability insurance with a limit of not less than $2,000,000 for each occurrence, $4,000,000 aggregate. Said insurance must also include coverage for products and completed operations, independent contractors, personal injury and advertising injury. If any Excess insurance is utilized to fulfill the requirements of this paragraph, the Excess insurance must be "follow form" equal or broader in coverage scope than underlying insurance.

2.3 *Automobile Liability-Any Auto or Owned, Hired and Non-Owned Vehicles*
Vehicle Liability: Consultant must maintain Business/Automobile Liability insurance with a limit of $1,000,000 each accident on Consultant owned, hired, and non-owned vehicles assigned to or used in the performance of Consultant's work or services under this Agreement. If any Excess or Umbrella insurance is utilized to fulfill the requirements of this paragraph, the Excess or Umbrella insurance must be "follow form" equal or broader in coverage scope than underlying insurance.

2.4 *Workers Compensation and Employers Liability Insurance:* Consultant must maintain Workers Compensation insurance to cover obligations imposed by federal and state statutes having jurisdiction of Consultant employees engaged in the performance of work or services under this Agreement and must also maintain Employers' Liability insurance of not less than $1,000,000 for each accident and $1,000,000 disease for each employee.

3. Additional Policy Provisions Required.

3.1 *Self-Insured Retentions or Deductibles*. Any self-insured retentions and deductibles must be declared and approved by City. If not approved, City may require that the insurer reduce or eliminate any deductible or self-insured retentions with respect to City, its officers, officials, agents, employees, and volunteers.

3.1.1. Consultant's insurance must contain broad form contractual liability coverage.

3.1.2. Consultant's insurance coverage must be primary insurance with respect to City, its officers, officials, agents, and employees. Any insurance or self-insurance maintained by City, its officers, officials, agents, and employees will be in excess of the coverage provided by Consultant and must not contribute to it.

3.1.3. Consultant's insurance must apply separately to each insured against whom claim is made or suit is brought, except with respect to the limits of the insurer's liability.

3.1.4. Coverage provided by Consultant must not be limited to the liability assumed under the indemnification provisions of this Agreement.

Docusign Envelope ID: A7B6C4E3-7188-4D37-84D4-B8F15495B921

3.1.5. The policies must contain a severability of interest clause and waiver of subrogation against City, its officers, officials, agents, and employees, for losses arising from Work performed by Consultant for City. (Does not apply to Professional Liability coverage.)

3.1.6. Consultant, its successors and or assigns, are required to maintain Commercial General Liability insurance as specified in this Agreement for a minimum period of 3 years following completion and acceptance of the Work. Consultant must submit a Certificate of Insurance evidencing Commercial General Liability insurance during this 3-year period containing all the Agreement insurance requirements, including naming City of Chandler, its agents, representatives, officers, directors, officials and employees as Additional Insured as required.

3.1.7. If a Certificate of Insurance is submitted as verification of coverage, City will reasonably rely upon the Certificate of Insurance as evidence of coverage, but this acceptance and reliance will not waive or alter in any way the insurance requirements or obligations of this Agreement.

3.2. *Insurance Cancellation During Term of Agreement.*

3.2.1. If any of the required policies expire during the life of this Agreement, Consultant must forward renewal or replacement Certificates to City within 10 days after the renewal date containing all the required insurance provisions.

3.2.2. Each insurance policy required by the insurance provisions of this Agreement must provide the required coverage and must not be suspended, voided or canceled except after thirty (30) days prior written notice has been given to City, except when cancellation is for non-payment of premium, then ten (10) days prior notice may be given. Such notice must be sent directly to Chandler Law-Risk Management Department, Post Office Box 4008, Mailstop 628, Chandler, Arizona 85225. If any insurance company refuses to provide the required notice, Consultant or its insurance broker must notify City of any cancellation, suspension, non-renewal of any insurance within seven (7) days of receipt of insurers' notification to that effect.

3.3 City as Additional Insured. The policies are to contain, or be endorsed to contain, the following provisions:

3.3.1. The Commercial General Liability and Automobile Liability policies are to contain, or be endorsed to contain, the following provisions: City, its officers, officials, agents, and employees are additional insureds with respect to liability arising out of activities performed by, or on behalf of, Consultant; Products and Completed operations of Consultant; and automobiles owned, leased, hired, or borrowed by Consultant.

3.3.2. City, its officers, officials, agents, and employees must be additional insureds to the full limits of liability purchased by Consultant even if those limits of liability are in excess of those required by this Agreement.

Docusign Envelope ID: A7B6C4E3-7188-4D37-84D4-B8F15495B921

EXHIBIT "D"
SPECIAL CONDITIONS

Work within City's Right-of-Way. All work performed within City's Right-of-Way by Consultant and Consultant's subconsultants must comply with City of Chandler requirements.

Docusign Envelope ID: A7B6C4E3-7188-4D37-84D4-B8F15495B921

EXHIBIT "E"
SUBCONSULTANT DOCUMENTS WITH CONSULTANT

Any subconsultant assumptions, clarifications, exclusions, terms & conditions, signature blocks, etc. included are strictly between the Consultant and their subconsultants, and do not apply to the Agreement between the Consultant and the City.

Docusign Envelope ID: A7B6C4E3-7188-4D37-84D4-B8F15495B921

RFI CONSULTANTS LLC

NACE Certified Coating Inspectors & Protective Coatings Specialists
Veteran Owned & Operated

June 12, 2025

To,
David Markert
Construction Project Director
Wilson Engineers
1620 W. Fountainhead Pkwy, Suite 501
Tempe, AZ 85282

From:
RFI Consultants LLC
2225 West Speer Trail
Phoenix AZ 85086

Sub: City of Chandler - Loop 101 and 202 Freeway 66-inch Redundant Sewer Project
Proposal for Coating Inspection Services

David;:

RFI Consultants LLC is pleased to provide a proposal for coating inspection services for the above Subject. Inspection procedures of the concrete sanitary sewer manholes shall be tested and inspected in accordance with all applicable technical bulletins or instructions, SSPC SP-13/NACE No.6 "Surface Preparation of Concrete", and manufacturer's recommendation to meet its expected service life. All manholes shall be clean, dry, and free of sewage and debris during all inspections. The projected scope of services and fees including expenses associated with the project are attached below. If the projected scope of services or fees exceed what is estimated, the client will need to provide RFI Consultants written authorization to continue.

Tasks:

1. **Replacement of Existing Manholes with New Polymer Concrete Manholes or Inserts - Installation of fiberglass reinforcement mat system to overlap and Terminate in the CIPP Lining in the manholes**
2. **Cast-in-Place Structure - Installation of PVC Armorlok (aka T-Lock)**

Inspections:

1) Surface Preparation: Visually inspect that the surface preparation conforms to the standard required either by the specification and/or the coating manufactures requirements., normally SSPC -SP 13/NACE 6 (Surface Preparation of Concrete). This includes checking that the correct CSP requirement has been achieved, the substrate is sound, pH readings if needed, checking for cracks, exposed rebar or any other possible discrepancies that could prevent optimum adhesion of the lining system to the substrate.

2) Underlayment / Cementitious Surfacer (If required) If an underlayment / cementitious surfacer has been applied , RFI will inspect for soundness, cracking, or any other discrepancies that could result in premature failure of the applied lining system.

3) Finish coat application w/holiday testing: Visually inspect for any coating discrepancies and holiday test according to NACE SP)-188 (Discontinuity (Holiday) Testing of New Protective Coatings on Conductive Substrates) for any discontinuities that could compromise the long-term protection and performance of the applied lining system.

2225 West Speer Trail Phoenix, AZ 85086
CELL: 480-560-7182 E-MAIL: eric_rfi@yahoo.com

Docusign Envelope ID: A7B6C4E3-7188-4D37-84D4-B8F15495B921

4) Re-holiday test (if required) Should any discrepancies be located in action item #3, RFI will visually. re-inspect and re-test any discrepancies that had to be corrected to insure compliance.

Inspection Rate:
$700.00 per inspection (15 manholes approximately 2 inspections per manholes = $21,000.00)
$700.00 per inspection (1 Cast-in-Place Structure approximately 6 inspection = $4,200.00)

Notes:
- Minimum 48 hours notice for all inspections.
- Responsibilities for cleaning out of the infrastructure for assessment to be provided by others
- Responsibilities for accessibility, confine space entry and exit, equipment, permits and all other related confine space procedures to be provided by others.
- RFI will provide our own safety harnesses, PPE clothing, respirators, monitors etc as required.

We appreciate the opportunity to be of service and looking forward to working on the project. If you have any questions, please do not hesitate to call us at 480-560-7182 or send us an e-mail at eric_rfi@yahoo.-com

Respectfully Submitted

Eric Brackman

Eric Brackman
Managing Member
RFI Consultants LLC
NACE CIP & PCS Lead Instructor
NACE CCI Level 3 w/ Bridge #14458
NACE PCS #14458
NASSCO Manhole Rehab Inspector
Armorlok PVC Protective Lining Inspector

Docusign Envelope ID: A7B6C4E3-7188-4D37-84D4-B8F15495B921

RFI CONSULTANTS LLC

NACE Certified Coating Inspectors & Protective Coatings Specialists
Veteran Owned & Operated

Craig Ramsey P.E.
Wilson Engineers
1620 W. Fountainhead Pkwy, Ste. 501
Tempe, AZ 85282

Re: Chandler Infrastructure

Mr. Ramsey:

RFI Consultants LLC was asked to provide our some background of our inspection services for installations of GFRP systems for the City of Chandler as well as one project for the City of Avondale where the GFRP manhole work was first completed by JPCI Services.

- Chandler Sewer Lift Station Coating Assessment 2019 - Subcontracted by Jacobs
- Chandler Airport WRF Headworks Assessment 2022 - Subcontracted by City of Chandler - John Ardans
- Chandler Airport WRF Headworks Rehabilitation 2023/24 - Subcontracted by City of Chandler - John Ardans
- Chandler Airport WRF Membrane Trains/ CIP Tank and Chemical Containment Areas 2023/24 - Subcontracted by Wilson
- Chandler Sewer LS Rehabilitation Project WW2106.401 - Subcontracted by MGC
- Avondale GFRP Manholes 2024 - Subcontracted by Dibble

Respectfully Submitted

Eric Brackman

Eric Brackman
NACE CIP & PCS Lead Instructor
NACE CCI Level 3 w/Bridge #14458
NACE PCS #14458
NASSCO Manhole Rehab Inspector
ArmorLok PVC Protective Lining Inspector

Docusign Envelope ID: A7B6C4E3-7188-4D37-84D4-B8F15495B921

EXHIBIT "F"
FEDERAL REQUIREMENTS

N/A

CHANDLER arizona

101/202 REDUNDANT 66-INCH SEWER LINE PROJECT NO. WW2402.451

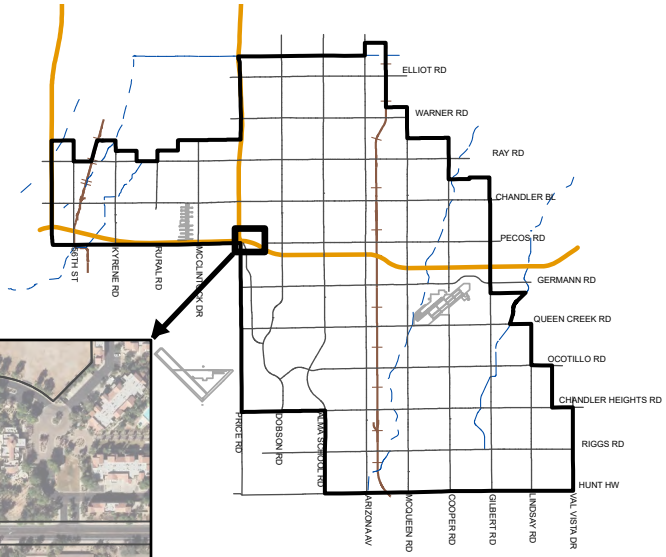

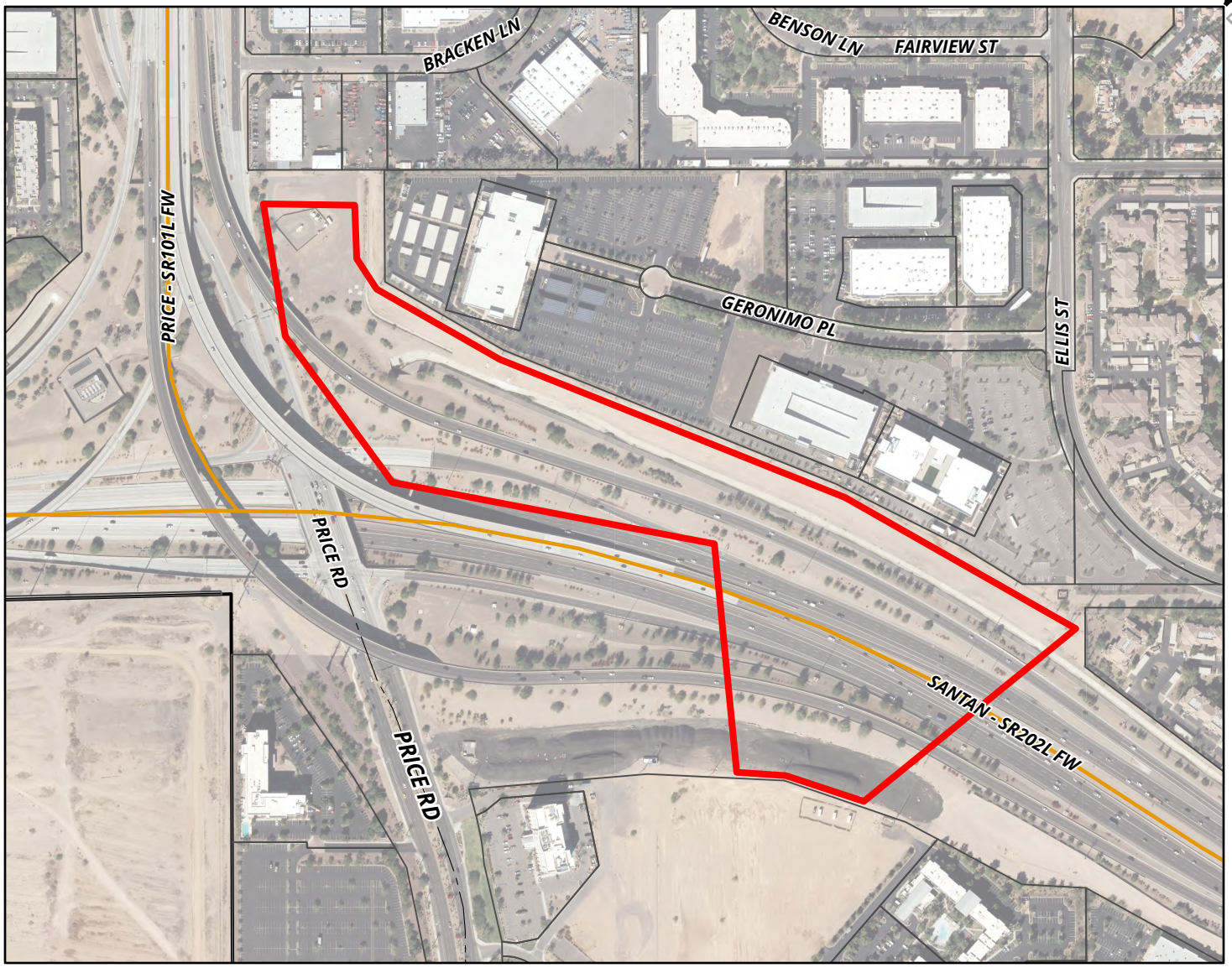

MEMO NO. CP26-020

PROJECT LOCATION

NTS

ChanGIS

F:\ENGINEER\GENSERV_ArcGISPro_Shared\Map Requests\Capital Projects\2025\CP25-059\CP25-059\CP25-059.aprx 8/8/2025 CameronK

City Council Memorandum Public Works & Utilities Memo No. CP26-021

Date: September 15, 2025
To: Mayor and Council
Thru: John M. Pombier, Acting City Manager
Dawn Lang, Deputy City Manager/CFO
Jeremy Abbott, Acting Public Works and Utilities Director
Daniel Haskins, Capital Projects Division Manager

From: Raymond Potts, Construction/Design Project Manager
Subject: Construction Manager at Risk (CMAR) Construction Services Agreement No. WW2402.401, with B&F Contracting, Inc., for the 101/202 Redundant 66-inch Sewer Line

---

Proposed Motion:

Move City Council award CMAR Construction Services Agreement No. WW2402.401, to B&F Contracting, Inc., for the 101/202 Redundant 66-inch Sewer Line, in an amount not to exceed $34,649,463.94.

Background/Discussion:

In February 2018, Chandler's potable water distribution system experienced a large water main break northeast of Price Road and the Loop 101/202 Santan Freeway interchange. This water line was accessed, repaired, and ultimately put back into service. Findings from a subsequent water line assessment raised concerns about the large 66-inch sewer line that also exists adjacent to these water lines crossing under the freeway. This sewer line conveys wastewater flows from north Chandler south to the Ocotillo Water Reclamation Facility for treatment. This large sewer line was installed at the same time as the water main crossing during the construction of the freeway interchange. The city's 2018 Water, Wastewater, and Reclaimed Water Master Plan also analyzed this 66-inch sanitary sewer freeway crossing. The evaluation noted the lack of redundancy for the sanitary sewer system crossing the freeway from north to south and the need in the near future to rehabilitate the existing freeway sewer crossing. The project scope of work consists of the new 66-inch diameter gravity sewer line segment

(approximately 700 linear feet) and steel casing for protection under the Loop 202 Santan Freeway. Modifications to the 48-inch diameter gravity lines and four junction structures. Further, the project will include cured-in-place pipe lining of the existing 66-inch diameter sewer, 48-inch diameter sewer, and 30-inch diameter sewer.

The Agreement completion time is 550 calendar days following Notice to Proceed.

A related Professional Services Agreement with Wilson Engineers, LLC, for the 101/202 Redundant 66-inch Sewer Line, is also scheduled for this City Council meeting.

Evaluation:

The selection process was followed in accordance with city policy and procedure and state law. Staff recommends an agreement award to B&F Contracting, Inc., based on qualifications, relevant firm experience, team experience, project understanding, and project approach. Staff reviewed the Guaranteed Maximum Price proposal and determined it to be reasonable.

Fiscal Impact

Account No.	Fund Name	Program Name	Dollar Amount	CIP Funded Y/N
615.3910.6210.6WW694	Wastewater Operating	Santan Freeway Redundant 66-inch Se	$4,889,463.94	Y
611.3910.6210.6WW694	Wastewater Bonds	Santan Freeway Redundant 66-inch Se	$29,760,000.00	Y

Attachments

Agreement - B&F Contracting

Location Map

Docusign Envelope ID: 9BB2C5B6-7E55-4E83-AB71-C6BAFFE53F8E

CITY OF CHANDLER, ARIZONA

101/202 REDUNDANT 66-INCH SEWER LINE
CITY PROJECT NO.: WW2402.401

CONSTRUCTION SERVICES AGREEMENT

(CONSTRUCTION MANAGER AT RISK)

Daniel Haskins

Daniel Haskins, P.E.
CIP City Engineer

Docusign Envelope ID: 9BB2C5B6-7E55-4E83-AB71-C6BAFFE53F8E

CITY OF CHANDLER, ARIZONA

101/202 REDUNDANT 66-INCH SEWER LINE
CITY PROJECT NO.: WW2402.401

TABLE OF CONTENTS

ARTICLE 1 - PARTICIPANTS AND PROJECT 1

ARTICLE 2 - AGREEMENT DOCUMENTS 3

ARTICLE 3 - PRE-CONSTRUCTION SERVICES 3

ARTICLE 4 - CONSTRUCTION SERVICES 3

ARTICLE 5 - CITY RESPONSIBILITIES 5

ARTICLE 6 - AGREEMENT TIME 5

ARTICLE 7 - AGREEMENT PRICE 7

ARTICLE 8 – FORCED LABOR OF ETHNIC UYGHURS PROHIBITED 7

EXHIBIT A – PROJECT SPECIFIC SPECIAL PROVISIONS A-1
EXHIBIT B – GENERAL CONDITIONS B-1
EXHIBIT C – TECHNICAL SPECIFICATIONS C-1
EXHIBIT D – ACCEPTED GMP/PRICE PROPOSAL D-1
EXHIBIT E – SUBCONTRACTOR'S LIST FORM E-1
EXHIBIT F – GIS / GPS DATA DELIVERY REQUIREMENTS (IF APPLICABLE) F-1
EXHIBIT G – SUBCONTRACTOR DOCUMENTS WITH CM@RISK G-1

Docusign Envelope ID: 9BB2C5B6-7E55-4E83-AB71-C6BAFFE53F8E

CONSTRUCTION MANAGER AT RISK
CONSTRUCTION SERVICES AGREEMENT
PROJECT NO.: WW2402.401

This Agreement (the "AGREEMENT") is made and entered into on the _____day of _____, 2025, ("Effective Date") by and between City of Chandler, an Arizona municipal corporation, hereinafter called "City" and B&F Contracting, Inc. the "Construction Manager at Risk" or "CM@Risk" designated below (City and CM@Risk may individually be referred to as "Party" and collectively referred to as "Parties").

City and CM@Risk agree as follows:

ARTICLE 1 - PARTICIPANTS AND PROJECT

CITY: **CIP City Engineer: Daniel Haskins, P.E.**
Public Works & Utilities Department
P.O. Box 4008, Mail Stop 407 Chandler, AZ 85244-4008
Phone: 480-782-3335 Email: Daniel.haskins@chandleraz.gov

CITY: **Construction Project Manager: Raymond Potts**
Public Works & Utilities Department
P.O. Box 4008, Mail Stop 407, Chandler, AZ 85244-4008
Phone: 480-782-3326 Email: Raymond.Potts@chandleraz.gov

CM@RISK:

Legal Company Name:	B&F Contracting, Inc.
Mailing Address:	11011 North 23rd Avenue Phoenix, AZ 85029
Physical Address:	11011 North 23rd Avenue Phoenix, AZ 85029
Arizona Roc No.:	089744 A
Federal Tax Id No.:	86-0677300
State Where Organized:	Arizona
Business Organization:	Corporation
Statutory Agent Name:	Bruce W. Balls
Statutory Agent Mailing Address:	1717 West Mandalay Lane Phoenix, AZ 85023
Statutory Agent Physical Address:	1717 West Mandalay Lane Phoenix, AZ 85023

CM@Risk's Authorized Project Representative:

Name:	Josh Onstott
Title:	Executive Director
Phone:	623-238-3792
Email:	jonstott@bfcontracting.com

Docusign Envelope ID: 9BB2C5B6-7E55-4E83-AB71-C6BAFFE53F8E

PROJECT DESCRIPTION:

This project includes a redundant 66-inch diameter gravity sewer line that crosses the Loop 202 Santan Freeway, rerouting several 48-inch diameter sewers, new junction structures for connecting the existing and proposed sewer, and cured-in-place pipe (CIPP) lining of existing sewers.

PROJECT LOCATION:

Loop 101/202 Santan Freeway interchange.

ARTICLE 2 - AGREEMENT DOCUMENTS

2.1 **AGREEMENT DOCUMENTS**

The Agreement between City and CM@Risk will consist of the following Agreement Documents:

1. This Construction Services Agreement and all of its Exhibits, including Project Plans and Technical Specifications.
2. General Conditions and General Conditions Appendices, incorporated by reference.
3. Project Specific Special Provisions as set forth in **Exhibit A**, incorporated by reference.
4. Accepted GMP/Price Proposal as set forth in **Exhibit D**, incorporated by reference.

2.2 In the event of any inconsistency, conflict, or ambiguity between or among the Agreement Documents, the Agreement Documents will take precedence as described in Section 14.1.4 of the General Conditions.

2.3 **DEFINITIONS**

The definitions in Sections 2 and 15 of the General Conditions apply to all the Agreement Documents, including this Agreement.

ARTICLE 3 - PRE-CONSTRUCTION SERVICES

Although CM@Risk has performed Pre-Construction Services pursuant to a separate Agreement between City and CM@Risk, the completion, quality and accuracy of those services and the deliverables provided by City thereunder directly impact CM@Risk's performance of its obligations under this Agreement. Therefore, all of CM@Risk's obligations, duties, and warranties in relation to Pre-Construction Services and deliverables survive completion of the Pre-Construction Services Agreement and are incorporated herein. Any breach of any of CM@Risk's duties, obligations, or warranties under the Pre-Construction Services Agreement will likewise be considered a breach of this Agreement.

ARTICLE 4 - CONSTRUCTION SERVICES

4.1 **GENERAL**

4.1.1 CM@Risk agrees at its own cost and expense, to do all work necessary and required to fully, timely and properly complete the construction of the Project in strict accordance with the Agreement Documents in a good and workmanlike manner, free and clear of all claims, liens, and charges whatsoever, in the manner and under the conditions specified, and within the schedule, stated in attached **Exhibit A**.

4.1.2 CM@Risk must provide all of the labor and materials, and perform the Work in accordance with Section 4 of the General Conditions. Some, but not all, of the major components of the Construction Services and the corresponding subsections of Section 4 of the General Conditions are set forth below.

4.1.3 This is an Agreement for complete construction services in accordance with the Construction Manager at Risk method of delivery of construction services. CM@RISK has participated in the design process and been an active member of the Project Design Team and is fully aware of any issues and constraints involved in this Construction Project.

4.1.4 CM@RISK is the CITY's fiduciary responsible for undertaking all necessary action contemplated under the Agreement documents to construct the Project and ensure timely and quality completion of the Project at a cost within the Guaranteed Maximum Price (GMP).

4.1.5 At all times relevant to this Agreement and performance of the Work, the CM@Risk must fully comply with all Laws, Regulations, or Legal Requirements applicable to City, the Project and the Agreement, including, without limitation, those set forth on attached **Exhibit A**.

4.1.6 CM@Risk must perform the Work under this Agreement using only those firms, team members and individuals designated by CM@Risk consistent with the Statement of Qualifications dated June 26, 2024, the GMP Proposal, or otherwise approved by City pursuant to the General Conditions. No other entities or individuals may be used without prior approval of the Project Manager

4.1.7 CM@Risk will comply with all terms and conditions of the General Conditions.

4.1.8 In the event of a conflict between this Agreement and the General Conditions or an exhibit hereto or appendix thereto, the terms of this Agreement will control.

4.1.9 <u>Ownership of Work Product</u>. Notwithstanding anything to the contrary in this Agreement, all Work Product prepared or otherwise created in connection with the performance of this Agreement, including the Work, are to be and remain the property of City. For purposes of this provision, "Work Product" will include all designs, drawings, plans, specifications, ideas, renderings and other information or matter, in whatever form created (e.g., electronic or printed) and in all media now known or hereinafter created. All Work Product will be considered Work Made for Hire as defined in the United States Copyright Act 17 U.S.C. § 101 (Copyright Act). If for any reason, any such Work is found not to be a Work Made for Hire, CM@Risk hereby transfers and assigns ownership of the copyright in such Work to City. The rights in this Section are exclusive to City in perpetuity.

Docusign Envelope ID: 9BB2C5B6-7E55-4E83-AB71-C6BAFFE53F8E

4.2 **CM@RISK'S PRE-AGREEMENT AND PRE-WORK DELIVERABLES**

4.2.1 The CM@Risk must provide the Deliverables in accordance with Section 4.2 of the General Conditions.

4.3 **PRE-CONSTRUCTION CONFERENCE**

Refer to Section 4.3 of the General Conditions.

4.4 **PERFORMANCE OF THE WORK (INCLUDING FIELD MEASUREMENTS, SUBCONTRACTORS, AND SUPPLIERS)**

Refer to Section 4.4 of the General Conditions.

4.5 **CONTROL OF THE PROJECT SITE**

Refer to Section 4.5 of the General Conditions.

4.6 **PROJECT SAFETY**

Refer to Section 4.6 of the General Conditions.

4.7 **MATERIALS QUALITY, SUBSTITUTIONS AND SHOP DRAWINGS**

Refer to Section 4.7 of the General Conditions.

4.8 **PROJECT RECORD DOCUMENTS**

Refer to Section 4.8 of the General Conditions.

4.9 **WARRANTY AND CORRECTION OF DEFECTIVE WORK**

Refer to Section 4.9 of the General Conditions.

ARTICLE 5 - CITY RESPONSIBILITIES

5.1 City will have the responsibilities, and provide the information specified in, and subject to the conditions set forth in, Section 5 of the General Conditions.

ARTICLE 6 - AGREEMENT TIME

6.1 **GENERAL**

6.1.1 The Agreement Duration is **550** Calendar Days.

6.1.2 The Agreement Time will start with the Notice to Proceed (NTP) and end with Final Acceptance, as set forth in Article 6.4 below. The Notice to Proceed cannot be issued until approval and acceptance by City of the GMP or Fixed Price.

6.1.3 The Agreement Time will be as set forth in the Project Schedule. CM@Risk agrees that it will commence performance of the Work and complete the Project through Final Acceptance within the Agreement Time.

6.1.4 Time is of the essence of this Agreement for the Project, and for each phase and designated Milestone thereof.

6.2 **PROJECT SCHEDULE**

6.2.1 The Project Schedule approved as part of the GMP Proposal and incorporated herein as part of the attached **Exhibit D** must be updated and maintained throughout CM@Risk's performance under this Agreement in accordance with Section 6.2 of the General Conditions.

6.2.2 Failure on the part of CM@Risk to adhere to the approved Project Schedule will be deemed a material breach and sufficient grounds for termination of this Agreement by City.

6.3 **SUBSTANTIAL COMPLETION**

Substantial Completion must be achieved no later than the Substantial Completion Date set forth in the Project Schedule. Substantial Completion will be determined in accordance with Section 6.3 of the General Conditions.

6.4 **FINAL ACCEPTANCE**

6.4.1 Final Acceptance will be obtained within the time period set forth in the Project Schedule.

6.4.2 Final Acceptance will be issued pursuant to Section 6.5 of the General Conditions.

6.5 **LIQUIDATED DAMAGES**

6.5.1 Substantial Completion Liquidated Damages. CM@Risk acknowledges and agrees that if CM@Risk fails to obtain Substantial Completion of the Work within the Agreement Time, City will sustain extensive damages and serious loss as a result of such failure. The exact amount of such damages will be extremely difficult to ascertain. Therefore, City and CM@Risk agree that if CM@Risk fails to achieve Substantial Completion of the Work within the Agreement Time, City will be entitled to retain or recover from CM@Risk, as liquidated damages and not as a penalty, the sum per calendar day as indicated in MAG § 108.9.

6.5.2 Final Acceptance Liquidated Damages. For the same reasons set forth in Article 6.5.1 above, City and CM@Risk further agree that if CM@Risk fails to achieve Final Acceptance of the Work within the Agreement Time, City will be entitled to retain or recover from CM@Risk, as liquidated damages and not as a penalty, the sum per calendar day as

indicated in MAG § 108.9 commencing from the actual date of Substantial Completion or Final Acceptance as required under the Agreement.

6.5.3 MAG Liquidated Damages. If no liquidated damages are specified in Articles 6.5.1 or 6.5.2 above, then the liquidated damages provisions in MAG § 108.9 will apply.

6.5.4 City may deduct liquidated damages described in this Article 6.5 from any unpaid amounts then or thereafter due CM@Risk under this Agreement. Any liquidated damages not so deducted from any unpaid amounts due CM@Risk will be payable to City at the demand of City, together with interest from the date of the demand at the highest lawful rate of interest payable by CM@Risk.

6.6 **MUTUAL WAIVER OF CONSEQUENTIAL DAMAGES ONLY**

6.6.1 CM@Risk and City waive claims against each other for consequential damages arising out of or relating to this Agreement. This mutual waiver includes:

6.6.1.1 Damages incurred by City for rental expenses, for losses of use, income, profit, financing, business and reputation, and for loss of management or employee productivity or of the services of such persons; and

6.6.1.2 Damages incurred by CM@Risk for principal office expenses including the compensation of personnel stationed there, for losses of financing, business and reputation, and for loss of profit except anticipated profit arising directly from the Work.

6.6.2 This mutual waiver is applicable, without limitation, to all consequential damages due to either Party's termination of this Agreement. Nothing contained in this Article 6.6 will be deemed to preclude an award of liquidated damages, when applicable, in accordance with Article 6.5 above.

6.6.3 Nothing herein will be deemed to constitute a waiver of any other remedy available to City in the event of CM@Risk's default under this Agreement prior to full performance of the Work including, as applicable, specific performance or completion of the Work on behalf of CM@Risk, the cost and expense of which will be offset against any monies then or thereafter due to CM@Risk (if any) and otherwise immediately reimbursed to City by CM@Risk.

ARTICLE 7 - AGREEMENT PRICE

7.1 **AGREEMENT PRICE**

7.1.1 In exchange for CM@Risk's full, timely, and acceptable performances and construction of the Work under this Agreement, and subject to all of the terms of this Agreement, City will pay CM@Risk the "Agreement Price," which:

The sum of the CM@Risk's Fee and reimbursable Cost of the Work, as defined in Section 15 of the General Conditions, which the CM@Risk guarantees will not exceed the GMP set forth in **Exhibit D** in the amount of **$34,649,463.94.** Costs which would cause the GMP to be exceeded must be paid by CM@Risk without reimbursement from City.

7.1.2 The Agreement Price is all-inclusive and specifically includes all fees, cost, insurance and bond premiums, allowances, construction contingency, owner's contingency, and taxes of any type necessary to fully, properly and timely perform and construct Work.

7.2 **CHANGES TO AGREEMENT PRICE**
Shall be determined under Section 9 of the General Conditions.

ARTICLE 8 - FORCED LABOR OF ETHNIC UYGHURS PROHIBITED

8.1 **FORCED LABOR OF ETHNIC UYGHURS PROHIBITED.** By entering into this Agreement, Contractor certifies and agrees Contractor does not currently use and will not use for the term of this Agreement: (i) the forced labor of ethnic Uyghurs in the People's Republic of China; or (ii) any goods or services produced by the forced labor of ethnic Uyghurs in the People's Republic of China; or (iii) any contractors, subcontractors or suppliers that use the forced labor or any goods or services produced by the forced labor of ethnic Uyghurs in the People's Republic of China.

SIGNATURE PAGE TO FOLLOW

Docusign Envelope ID: 9BB2C5B6-7E55-4E83-AB71-C6BAFFE53F8E

IN WITNESS WHEREOF, the Parties hereto have executed this Agreement through their duly authorized representatives and bind their respective entitles as of the effective date.

"CITY" CITY OF CHANDLER

MAYOR

RECOMMENDED BY:

Daniel Haskins August 21, 2025

Daniel Haskins, P.E.
CIP City Engineer

APPROVED AS TO FORM:

City Attorney JMB

ATTEST:

City Clerk Seal

"CM@Risk"
B&F CONTRACTING, INC.

Joshua Onstott August 21, 2025

Signature Date

Joshua Onstott

Print Name

President

Title

Jonstott@bfcontracting.com

Signer Email Address

Docusign Envelope ID: 9BB2C5B6-7E55-4E83-AB71-C6BAFFE53F8E

EXHIBIT A

PROJECT SPECIFIC SPECIAL PROVISIONS

4.2.7 Aerial Construction Photography

General Conditions Section 4 Subsections 4.2.7.1 & 4.2.7.2 are not applicable to this project.

4.2.8 Government Approvals and Permits

General Conditions Section 4 Subsection 4.2.8.1, City permit fees will be paid internally by the City and all other fees will be the responsibility of the Contractor.

Subletting of Agreement

Contractor must perform, with his own organization, work amounting to not less than 50 percent of the total Agreement cost.

Failure to submit Subcontractor's List Form, demonstrating self-performance not less than 50 percent of the total Agreement cost, will cause the bid to be deemed non-responsive.

Contractors should contact the Arizona Registrar of Contractors for information on license requirements.

EXHIBIT B

GENERAL CONDITIONS

GENERAL CONDITIONS

Approved date: July 20, 2022

TABLE OF CONTENTS

SECTION 1 - SCOPE OF THESE GENERAL CONDITIONS 3

SECTION 2 - GENERAL DEFINITIONS 3

SECTION 3 - STANDARD SPECIFICATIONS AND DETAILS 7

SECTION 4 - CONTRACTOR'S RESPONSIBILITIES FOR CONSTRUCTION SERVICES 8

SECTION 5 - CITY RESPONSIBILITIES 27

SECTION 6 - AGREEMENT TIME 29

SECTION 7 - AGREEMENT PRICE 35

SECTION 8 - PAYMENT 35

SECTION 9 - CHANGES TO THE AGREEMENT 40

SECTION 10 - SUSPENSION AND TERMINATION 43

SECTION 11 - INSURANCE AND BONDS 44

SECTION 12 - INDEMNIFICATION 49

SECTION 13 - DISPUTE RESOLUTION 49

SECTION 14 - MISCELLANEOUS PROVISIONS 50

SECTION 15 - PROVISIONS APPLICABLE SOLELY TO GMP AND COST-BASED AGREEMENTS, CHANGE ORDERS, AND JOB ORDERS 57

SECTION 16 - PROVISIONS APPLICABLE SOLELY TO JOB ORDER AGREEMENTS (JOC) 61

SECTION 17 - PROVISIONS APPLICABLE SOLELY TO PRE-CONSTRUCTION SERVICES FOR CONSTRUCTION MANAGER AT RISK 66

SECTION 18 - APPENDICES ..... APP-1 of 30

Appendix 1 – Policy Statement for Calculating Delays and Damages
Appendix 2 – Cost Reduction Incentive Proposals for Design Bid Build Agreements
Appendix 3 – Contractor's Affidavit Regarding Settlement of Claims
Appendix 4 – Forms of Performance Bond
Appendix 5 – Forms of Payment Bond
Appendix 6 – Dispute Resolution
Appendix 7 – Certificate of Completion
Appendix 8 – Construction Sign Detail
Appendix 9 – Cost of the Work (Applicable solely to Construction Manager at Risk and Job Order Contracting)
Appendix 10 Landscape Establishment Period

SECTION 1 - SCOPE OF THESE GENERAL CONDITIONS

These General Conditions encompass provisions that apply, and are incorporated into all construction Agreements entered into by the City of Chandler, unless otherwise specifically excluded in the executed Agreement.

SECTION 2 - GENERAL DEFINITIONS

Allowance : A specific amount for a specific item of Work, if any, that City agrees has not been sufficiently designed, detailed, or selected (including design changes from 90% to 100% as authorized by and at the discretion of the City) at the time the Agreement Price is agreed to for Contractor to provide a definitive price.

Alternate Systems Evaluations or Alternative Analysis: Alternatives for design, means and methods or other scope considerations that are evaluated using value analysis principles and have the potential to reduce construction costs while still delivering a quality and functional Project that meets City requirements.

Change Order: A written instrument issued after execution of the Agreement Documents signed by City and Contractor, stating their agreement upon all of the following: the addition, deletion or revision in the scope of services or deliverables; the amount of the adjustment to the Agreement Price, the extent of the adjustment to the Agreement Time, or modifications of other agreement terms. The Agreement Price and the Agreement Time may be changed only by Change Order.

Consultant: Person or firm that provides professional services.

City (Owner or OWNER): City of Chandler, a municipal corporation, with whom Contractor has entered into the Agreement and for whom the Work or Services are to be provided pursuant to the Agreement(s).

Contingent Bid Items: This is a minor bid item which is likely, but not certain, to occur during the course of work. If the Engineer determines that this work is required, the Contractor will accomplish the work and payment will be made based on the contingent unit bid price included in the proposal. Since the quantity listed in the proposal is primarily for bid comparison, the amount of work required by the Engineer may vary materially from this.

Agreement: The written agreement executed between City and Contractor, including all of the Agreement Documents.

Agreement Documents: The documents which together form the Agreement between City and Contractor, as identified in Article 2 of the Agreement, or are otherwise incorporated into the Agreement, including the Agreement, the exhibits thereto, these General Conditions, any Notice to Proceed, and any Job Order (if applicable), the Plans and Specifications, Project Schedule, written and properly executed Change Orders, MAG Specifications and City's amendments thereto, and any other documents so designated in the Agreement.

Agreement Price: The agreed-upon price to be paid to Contractor for full, timely, and acceptable completion of the Work or Services under the terms of the Agreement.

Agreement Time(s): The number of calendar days or the dates related to the applicable phase, Substantial Completion, or Final Acceptance as stated in Agreement Documents. Agreement Time starts

with the Notice to Proceed (NTP) and ends with Final Acceptance. The Agreement Time is set forth in the Agreement and is based upon the Project Schedule agreed to by City in writing.

Contractor: The person or business association with whom City has entered into an agreement for construction related Work or Services in relation to the Project at issue.

Contractor Payment Request: The form that is accepted by City and used by Contractor in requesting progress payments or final payment and which must include such supporting documentation as is required by the Agreement Documents or City.

Construction Budget: The City's budget for construction of the Project.

Construction Documents: The Plans, Specifications, and Drawings prepared and issued by the Design Professional and approved by City for construction, meaning the documents are sealed by the Design Professional (as required), acceptable for permitting and incorporated into the Agreement by this reference. All amendments and modifications to the Construction Documents must be approved in writing by City prior to incorporation into the Agreement.

Cost of the Work: The term Cost of the Work will mean costs necessarily incurred by Contractor in the proper performance of the Work. Such costs will be at rates not higher than the standard paid at the place of the Project except with prior consent of City.

Critical Path Method (CPM): A scheduling technique which identifies the logical sequence of the activities occurring in a Construction Project, the anticipated time required to complete each activity in the Project, and the activities that must be completed on schedule to finish the Project within the anticipated time. Typically, activities are arranged in a network that shows both activities and their dependencies. CPM is also used as a management technique which enables contracting parties to predict when activities may occur so that resources can be effectively used and limitations can be identified.

Critical Path: Critical Path is the sequence of project network activities which add up to the longest overall duration. Once established in the Project Schedule, the Critical Path for the Project must not be changed without prior written approval of City.

Day: Calendar day(s) unless otherwise specifically stated in the Agreement Documents.

Design Professional: The qualified, licensed person, firm or corporation who furnishes design and construction administration services required under the Agreement Documents. These services may include, but are not limited to: development of Construction Drawings and Documents, review of Contractor Submittal(s), review of and response to Requests for Information, approval and certification of progress payment applications, construction administration, and construction agreement close out.

Differing Site Conditions: Concealed or latent physical conditions or subsurface conditions at the Site that, (i) materially differ from the conditions indicated in the Agreement Documents, or (ii) are of an unusual nature, differing materially from the conditions ordinarily encountered and generally recognized as inherent in the Work at the general area of the Site. Caliche, rock, hard-digging or sandy/silty soil encountered on a project is not considered a "Differing Site Condition."

Drawings (Plans): Documents, which visually represent the scope, extent and character of the Work to be furnished and performed by Contractor during the construction phase and which have been prepared

or approved by the Design Professional and City. These documents include Drawings that have reached a sufficient state of completion and released by Design Professional solely for the purposes of review and use in performing constructability or bid-ability reviews by Contractor and in preparing cost estimates (e.g. Master Planning and Programming, Schematic Design, Design Development, and Construction Drawings), but *"not for construction*." Shop Drawings are not Drawings as so defined.

Final Acceptance: The City's acceptance of the facility or project from the Contractor after all Work is completed, tested, and inspected in accordance with the Agreement requirements. Final Acceptance results in a Letter of Acceptance (LOA).

Fixed Price: A fixed price or amount for an Agreement Price, Scope of Work, materials, or other item under an Agreement, Change Order, or other agreement, which City agrees, in writing, to pay instead of the actual cost.

Float: The number of Days by which an activity can be delayed without lengthening the Critical Path and extending the Agreement Time. Unless otherwise expressly agreed in writing, all Float belongs to City.

Laws, Regulations, or Legal Requirements: Any and all applicable laws, rules, regulations, ordinances, codes and orders applicable to the Project of any and all governmental bodies, agencies, authorities and courts having jurisdiction and any applicable provisions of the Development Agreement for the Project (if any), including, without limitation, those provisions relating to the design and construction of the Project.

Line Item: The individual elements of Work identified on a bid or other schedule and associated with a price or a unit price and quantity particular to that individual element of the Work. Also refers to individual items of work within the Schedule of Values.

Liquidated Damages: Designated damages for the City to collect as compensation upon a specific breach (example: late delivery).

Long-Lead Item: Long-lead item refers to the equipment, product, or system that is identified at the earliest stage of a project to have a delivery time long enough to affect directly the Critical Path/the overall lead time of the project.

MAG: The Maricopa Association of Governments.

MAG Specifications: The most current version of the Uniform Standard Specifications for Public Works Construction published by MAG.

MAG Standard Details: The most current version of the Uniform Standard Details as published by MAG.

Minor change: A change in the Work having no impact on cost or time or the City-approved design intent, as determined by City.

Notice to Proceed (NTP): A written notice given by City to Contractor fixing the date on which Contractor will start to perform Contractor's obligations under the Agreement.

Project: The Project specified in the Agreement (including a Job Order).

Project Manager: The Project Manager designated in Article 1 of the Agreement, or any successor thereto

designated by City. The Project Manager has the authority to act on behalf of City, as delineated and limited by the Agreement Documents and applicable law. And City will communicate with Contractor through the Project Manager. However, the Project Manager has no authority to bind City or City Council in contravention of any City code, State or Federal statute or regulation, or these General Conditions.

Project Schedule: The schedule for the completion of the Project agreed to and required by City.

Project Specific Conditions: Additional conditions which apply to the specific Project and Scope of Work which are set forth in Exhibit D of the Agreement.

Project Team: The Project Team consisting of the Design Professional, Contractor, Project Manager, and such others as City may designate.

Punch List: The list initially prepared by Contractor pursuant to the Agreement Documents, reviewed and supplemented by the Project Manager (and at the sole option of the Project Manager, the Design Professional) and approved by City containing items of incomplete work not impacting Substantial Completion, if allowed for under the Agreement, and to be completed or corrected by Contractor after Substantial Completion and before Final Acceptance in accordance with the Agreement Documents.

Quality Assurance (QA) Testing: Testing performed to verify the accuracy and applicability of the QC testing results and to ascertain that the materials installed meet the specified levels of quality in accordance with the Agreement Documents.

Quality Control (QC) Testing: Testing performed to assure that the materials installed comply with the requirements in the Agreement Documents.

Requests for Information (RFIs): Formal written request from Contractor to City or Design Professional for the Project seeking clarification or additional information needed for Contractor to properly complete the Work or Services under the Agreement. City may require RFI's to be submitted on a specific form or in a specified format.

Schedule of Values (SOV): The specified document prepared by Contractor, and approved and accepted by City, which divides the Agreement Price into pay items, such that the sum of all pay items equals the Agreement Price for the construction phase Work, or for any portion of the Work having a separate specified Agreement Price.

Scope of Work: The scope of work agreed to or required by City and incorporated into the Agreement as Exhibit A.

Shop Drawings: All drawings, diagrams, schedules and other data specifically prepared for the Work by Contractor or a Subcontractor, Sub-subcontractor, manufacturer, supplier or distributor to illustrate some portion of the Work.

Site: The land or premises on which the Project is located.

Specifications: The part(s) of the Agreement Documents for the construction phase consisting of written technical descriptions of materials, equipment, construction systems, standards and workmanship as applied to the Work and certain administrative details applicable thereto. Where specified, the Project must be constructed using the current Uniform Standard Specifications and Details for Public Works

Construction as furnished by the Maricopa Association of Governments, as amended by City.

Subconsultant: A person, firm or corporation having an Agreement with Consultant/Contractor to furnish services required as its independent professional associate or consultant with respect to the Project.

Subcontractor: An individual or firm having a direct Agreement with Contractor or any other individual or firm having an Agreement with the aforesaid contractors at any tier, who undertakes to perform a part of pre-construction services or construction phase Work at the Site for which Contractor is responsible. Subcontractors must be selected through the Subcontractor selection process described in the Agreement Documents, if any.

Substantial Completion: The date when the City determines that the Work (or separable units of Phases as provided in the Agreement Documents) is essentially and satisfactorily complete in accordance with the Agreement Documents such that the Project is ready for use by the City for its intended purpose, opening to the general public, full occupancy or use by City (including, without limitation, all separate units, or rooms, facilities, access, income-generating areas, and all areas serving the general public, as applicable, must be ready for full operation without material inconvenience or discomfort), including, to the extent applicable to the Work, the following: all materials, equipment, systems, controls, features, facilities, accessories, and similar elements are installed in the proper manner and in operating condition, inspected, and approved; surfaces have been painted; masonry and concrete cleaned with any sealer or other finish applied; utilities and systems connected and functioning; site work complete; permanent heating, ventilation, air conditioning, vertical transportation, and other systems properly operating with proper controls; lighting and electrical systems installed, operable and controlled; paving completed, signage installed, and other work as applicable, has been performed to a similar state of essential and satisfactory completion.

Supplier: A manufacturer, fabricator, distributor, or vendor having a direct Agreement with Contractor or with any Subcontractor to furnish materials or equipment to be incorporated in the construction phase Work by Contractor or any Subcontractor.

Total Float: Number of Days by which pre-construction services or construction phase Work or any part of the same may be delayed without necessarily extending a pertinent Agreement Time or schedule milestone in the Project Schedule.

Work: The entire completion of construction or the various separately identifiable parts thereof, required to be furnished during the construction phase. Work includes and is the result of performing or furnishing labor and furnishing and incorporating materials, resources and equipment into the construction, and performing or furnishing services and documents as required by the Agreement Documents for the construction phase.

Writing: Typing, printing, photography and other modes of representing or reproducing words in a visible form, including email, and expressions.

SECTION 3 - STANDARD SPECIFICATIONS AND DETAILS

3.1 City operates under the latest revision of the MAG Specifications and MAG Standard Details as amended by City. City's current amendment to the MAG Specifications, part of the City's Unified Development Manual, may be found and downloaded from City's website at http://www.chandleraz.gov.

3.2 Copies of the MAG Specifications and MAG Standard Details are available at the Maricopa Association of Governments office, 302 N. 1st Avenue, Suite 300, Phoenix, Arizona. They may also be downloaded from their website at: http://www.azmag.gov/Newsroom/Publications

3.3 The MAG Specifications and Standard Details and City's amendments thereto are incorporated into the Agreement by this reference.

SECTION 4 - CONTRACTOR'S RESPONSIBILITIES FOR CONSTRUCTION SERVICES

4.1 GENERAL

4.1.1 Contractor must construct the Work in accordance with the Agreement Documents and as outlined in Exhibit A of the Agreement to the satisfaction of City, exercising the degree of professional care, skill, diligence, quality and judgment that a professional construction manager engaged, experienced and specializing in the construction management of construction and facilities of similar scope, function, size, quality, complexity and detail in urban areas throughout the United States comparable to Chandler, Arizona would exercise at such time, under similar conditions. Contractor must, at all times, perform the Work in conformance with sound and generally accepted engineering principles and construction management and construction contracting practices.

4.1.2 If Contractor observes errors, discrepancies or omissions in the Agreement Documents, Contractor must promptly notify the Design Professional and City and request clarification. If Contractor, with the exercise of reasonable care, should have recognized such error, inconsistency, omission, or difference and fails to report it to City, and if Contractor proceeds with the Work affected by such observed errors, discrepancies or omissions, without receiving such clarifications, Contractor does so at its own risk and will be liable to City for damages resulting from proceeding without clarification.

4.1.3 Project Team and agents of each of them, testing agencies and governmental agencies with jurisdictional interests will be provided access to the Work at reasonable times for their observation, inspection, and testing. Contractor must provide proper and safe conditions for such access.

4.1.4 Contractor must comply with, and require all Subcontractors to comply with, the Arizona Contractors' license laws, including all requirements with respect to being duly registered and licensed.

4.1.5 Contractor must ensure that all employees performing any Work for which Contractor is responsible have a legal right to live and work in the United States. In addition, all compensation of any such employee must meet all applicable requirements of the Fair Labor Standards Act (FLSA) and Federal Minimum Wage laws.

4.1.6 Contractor must comply with the Immigration Reform and Control Act of 1986 (IRCA). Contractor understands and acknowledges the applicability of the IRCA activities. Contractor agrees to comply with the IRCA while performing their work and to permit City inspection of Contractor personnel records to verify such compliance.

4.1.7 Pursuant to MAG Specifications §§ 107.4, Contractor must report immediately any discovery of archeological ruins or artifacts. Excavation must stop immediately so that City can decide on the pertinent steps to follow such discovery.

4.1.8 All property owners that may be affected by the proposed construction activities must be notified of the scope, duration of the construction activities and possible interference with their day-to-day activities by Contractor prior to start of construction. In addition, individual residential or commercial interferences, such as driveway restrictions, water outages, and all other Work adjacent to residence/business, require 48-hour notification in advance of specific adjoining Work. Notification may be through door hangers or other procedures approved by the City.

4.1.9 Access must be maintained to adjacent properties at all times during construction. Where property has more than one point of access, no more than one access will be restricted or closed at any one time. Access to adjacent private driveways will be maintained during all non-working hours.

4.1.10 Contractor must furnish and erect construction signs in accordance with Project Specifications. The signs must be professionally prepared and subject to approval by City, must be maintained by Contractor for the duration of the project, and must be removed by Contractor during the final project clean up.

4.1.11 The number of signs required, the size, shape, installation requirements and information to be included for construction signs is established on the detail sheet, provided, however, signs must be a minimum of 4 foot by 8 foot and must be installed so that the bottom of the sign is at least 4 foot above grade. No direct payment will be made for furnishing and erecting construction signs. The cost thereof must be included in other items for which direct payment is made. Sign locations will be determined by City.

4.1.12 All required construction signs must be installed by Contractor within 7 Days of Notice to Proceed.

4.1.13 The Work to be accomplished under these Agreement Documents has been designed for City by a Design Professional retained by City for this purpose. It is understood that normal construction Administration for the purpose of interpretation of the Agreement Documents is provided by City. Should any services of the Design Professional be required to assist in the corrections of errors or omissions by Contractor, or services of the Design Professional be required because of changes in structure or equipment where Contractor has requested approval of substitute methods or material, or any other items detailed herein below, those services will be provided by the Design Professional at the standard hourly rates previously negotiated with City and must be paid for by the Contractor.

4.1.14 Contractor must reimburse City for costs incurred by the Design Professional for additional services to the Project through no fault of City or the Design Professional including, but not limited to, the following conditions:

a. Additional Site visits, investigations, inspections, design work or reports by the Design Professional which are required due to damages to existing facilities or completed Work caused by the Contractor in his performance, Contractor's negligence, or Contractor's Work which is rejected as defective or as failing to conform to the Agreement Documents;

b. Design Professional construction phase services rendered on the project during the time the project remains incomplete after the Agreement date of final completion will be charged to Contractor at a rate previously negotiated City; and

c. All retesting required due to the failure of Contractor's Work to meet the requirements of the Agreement Documents will be at Contractor's expense. All standby and travel time by the City's testing lab, the Design Professional or City due to Contractor's inability to be prepared for testing at the agreed upon time will be at the Contractor's expense.

4.1.15 City may withhold from any payment otherwise due to Contractor any amounts necessary to pay the Design Professional for such additional services as provided herein above.

4.1.16 Contractor will not be required to bear additional costs incurred by City due to errors by the Design Professional.

4.2 **CONTRACTOR'S PRE-AGREEMENT AND PRE-WORK DELIVERABLES**

4.2.1 Prior to award of the Agreement, Contractor must execute Agreement and deliver to City. Failure to do so may delay Agreement award. Contractor must also provide to City its Contractor's License classification and number and its Federal Tax I.D. number.

4.2.2 Before beginning any Work under the Agreement, Agreement must be fully executed by City.

4.2.3 After Agreement award, City will issue to Contractor an award letter. At that time Contractor must deliver to City such bonds and certificates of insurance with endorsements in such amounts (and other evidence of insurance requested by City) required under Section 11 of these General Conditions, and as the Agreement requires.

4.2.4 As evidence of Workmen's Compensation Insurance, Contractor must, upon request, provide a letter of certification from the Industrial Commission of Arizona that Contractor is insured by the State Compensation Fund or is an authorized self-insurer or a certificate of insurance issued by an insurance company authorized by the Insurance Department of Arizona to write Workmen's Compensation and Occupational Disease Insurance in the State of Arizona.

4.2.5 Within 10 Days of the date of the executed Agreement letter issued by City, Contractor must submit to City for review and acceptance the following items:

4.2.5.1 Comprehensive construction Project Schedule including a Critical Path Method (CPM) diagram schedule as described in Section 6.2. Project Schedule must be in Microsoft Project standard file format. Within 10 Days of receipt of City's comments, Contractor must make all required corrections, adjustments, and additions to complete the Project Schedule and resubmit to City for review.

4.2.5.2 Preliminary schedule of submittals and Shop Drawings. Within 10 Days of receipt of City's comments, Contractor must submit the corrected and completed schedule of Shop Drawings submissions for approval. Contractor's schedule of Shop Drawings and sample submittals will be acceptable to City if it provides a workable arrangement for reviewing and processing the required submittals.

4.2.5.3 Schedule of Values in a form specified by City reflecting the subcontracts and other categories that will be used to submit Pay Applications for the Work. The total amount of the Schedule of Values must not be greater than the Agreement Price. The Schedule of Values will be reviewed at the Pre-Construction Conference and revised by Contractor within 10 Days after Pre-Construction Conference in response to comments and questions from

City. Once accepted by City in writing, the Schedule of Values for the Project must not be changed without the prior written approval of City.

4.2.6 Video Recording Requirement. Prior to performing any Work, Contractor must document the existing conditions of the Site, all other areas where Work will occur and all adjacent areas that may be impacted by the Work via digital video format. Contractor must video record and index all areas, features, buildings and other public and private improvements that could potentially be impacted by the Work. Video recording must be coordinated with City. When video recording private property, Contractor must also coordinate the video recording with the private property owner, if possible. Contractor must provide City with a copy of said digital video format prior to performing any Work.

4.2.7 Aerial Drone Construction Photography.

4.2.7.1 If Agreement duration is greater than 90 calendar days, Contractor must engage a professional unmanned aerial vehicle (UAV) aerial pilot to photograph the Site prior to construction mobilization, at three-month intervals during construction, and following final inspection. Drone camera specifications must meet the following minimum requirements:

a. 1-inch CMOS
b. Pixels: 20M
c. FOV 84 8.8 mm/24 mm (35 mm format equivalent) f/2.8-f/11 auto focus at 1 m-
d. For photographing: 16.9 Aspect Ratio: 5472x3078
e. For video shooting: MP4/MOV/H.264
f. FHD: 1920x1080 120p @100Mbps
g. File format: High Definition (HD) JPEG for digital photos and HD MPEG 4 for digital video.
h. All metadata to be recorded including GPS data and preserved with photographs provided.

Interval	**JPEG**
3 month intervals	At an altitude (AGL) between 70-90 ft.
3 month intervals	Images to be taken every 50-100 ft. to be determined based on project scope.

4.2.7.2 Drone photos to be taken in sequential geographical order and then organized and provided in the same manner unless otherwise specified.

4.2.7.3 Photos to be provided digitally via an online file share service and/or by a USB drive to contractor.

4.2.7.4 Drone pilots to obey ALL local (city, county, state) UAV regulations as well as FAA UAV guidelines including, but not limited to, conducting all flights during daylight hours, not exceeding maximum altitude ceilings (depending on area), not flying over people, yielding to other aircraft.

4.2.7.5 Drone pilots must fly drone within visual line of sight (VSOL) and have visual spotter when needed. Drone pilots only to operate in favorable weather conditions when minimum visibility is 3 miles or greater.

4.2.7.6 Drone pilots to conduct a preflight checklist and visually inspect the entire flight path prior to flying to ensure a safe flight.

4.2.7.7 Airspace Authorizations. Operations in Class G airspace are allowed without air traffic control (ATC) permission. Operations in Class B, C, D and E airspace need ATC authorization. Drone pilots to schedule each flight in advance and based on airspace if required will notify nearby airports/control towers, etc.

4.2.8 Government Approvals and Permits.

4.2.8.1 Contractor must obtain all necessary permits for the Work and pay all applicable fees, unless otherwise noted on the Plans and in the Specifications. City permit fees will be paid internally by City. For bidding purposes, an allowance for all permit fees is included in the bid schedule under the item "allowance for permit fees." The Contractor will be paid for the actual cost of the permit fees upon submitting a receipt showing the fee Contractor has paid. Excluded from the above allowance are items such as all costs incurred by the Contractor in securing the permit except for the actual permit fee established by the agency, cost for all shutdowns or outages, cost for pole bracing, cost of permits for construction water, cost of construction water, cost for any additional insurance requirements, cost for any licenses, and other similar type costs. Contractor is specifically notified of the need to obtain the necessary environmental permits or file the necessary environmental and regulatory permit notices.

4.2.8.2 Copies of all permits and the associated notices must be provided to City prior to starting the permitted activity.

4.3 PRE-CONSTRUCTION CONFERENCE

4.3.1 Prior to the commencement of any Work, City will schedule a Pre-Construction Conference.

4.3.2 The purpose of this Conference is to establish a working relationship between Contractor, the utility firms, and various City agencies. The agenda will include critical elements of the Work schedule, submittal schedule, cost breakdown of major lump sum items, Payment Requests and processing, coordination with the involved utility firms, and emergency telephone numbers for all representatives involved in the course of construction.

4.3.3 Minimum attendance by Contractor at any mandatory meeting with City must be (1) Contractor's Representative, who is authorized to execute and sign documents on behalf of the firm, (2) Contractor's on-site Superintendent, and (3) Contractor's Safety Office, or other employee responsible for safety.

4.4 PERFORMANCE OF THE WORK (INCLUDING FIELD MEASUREMENTS, SUBCONTRACTORS, AND SUPPLIERS)

4.4.1 Unless otherwise provided in the Agreement Documents to be the responsibility of City or a separate Contractor, Contractor must provide through itself or Subcontractors the necessary supervision, labor, inspection, testing, start-up, material, equipment, machinery, temporary utilities and other temporary facilities to permit Contractor to complete the Work consistent with the Agreement Documents.

4.4.2 Contractor must perform all construction activities efficiently and with the requisite expertise, skill and competence to satisfy the requirements of the Agreement Documents. Contractor must at all times exercise complete and exclusive control over the means, methods, safety, sequences and techniques of construction.

4.4.3 Contractor's Superintendent must be present at the Site at all times that material Work

under this Agreement is taking place. Contractor's Superintendent or designee must be present at the Site at all times any other Work under this Agreement is taking place. Superintendent must not be replaced without written notice to City. Whenever the Superintendent is not present at a particular part of the Work where the City or Design Professional may desire to inform the Contractor relative to interpretation of the Drawings and Specifications or to disapproval or rejection of materials or Work performed, the City or Design Professional may provide such information in writing to the foreman or other worker in charge of the particular part of the Work in reference to which the information is given. Information so given will be as binding as if given to the Superintendent.

4.4.4 All elements of the Work must be under the direct supervision of a foreman or his designated representative on the Site who must have the authority to take actions required to properly carry out that particular element of the Work.

4.4.5 Working Hours. Except in connection with the safety or protection of persons or the Work or property at the Site or adjacent thereto, and except as otherwise indicated, all Work at the Site must be performed during regular working hours, and Contractor will not permit overtime work or the performance of Work on Saturday, Sunday or any legal holiday without City's written consent given after prior written notice to City. If it will become absolutely necessary to perform Work at night or on Saturdays, Sundays or legal holidays, the City must be informed at least 24 hours in advance of the beginning of performance of such Work. Only such Work will be done at night as can be done satisfactorily as determined by the City. Good lighting and all other necessary facilities for carrying out and inspecting the Work must be provided and maintained at all points where such Work is being done. Further, unless such non-normal work hours are performed at City's request or required by the Agreement Documents, Contractor must pay to City all additional costs incurred by City by reason of such non-normal working hours. Expenses incurred by City for overtime compensation must be reimbursed by Contractor as follows: (i) City staff at the rate set forth in current City Fee Schedule as published on City website, (ii) Design Professional and staff at the standard hourly rates previously negotiated with City, and (iii) all others at actual cost plus ten percent administrative overhead. Such costs may be deducted by City from any payments due to Contractor. Provided, however, if overtime work or work during other than normal hours is at the request of City and not due to Contractor delay, City will pay the cost of City overtime expenses.

4.4.6 Where the Agreement Documents require that a particular product be installed or applied by an applicator approved by the manufacturer, it is Contractor's responsibility to ensure the Subcontractor employed for such work is approved by the manufacturer. All materials and equipment must be stored, applied, installed, connected, erected, used, cleaned and conditioned in accordance with the instructions of the applicable manufacturer, fabricator, supplier or distributor, except as otherwise provided in the Agreement Documents; but no provisions of any such instructions will be effective to impose on City of Design Professional responsibility for the means, methods, techniques, sequences or procedures of construction or for safety precautions incident thereto.

4.4.7 Before starting the Work, Contractor must carefully study and compare the various Plans, Drawings, other Agreement Documents, and Specifications relative to that portion of the Work, as well as the information furnished by City, must take field measurements of any existing conditions related to that portion of the Work and must observe any conditions at the Site affecting it. The exactness of grades, elevations, dimensions, or locations given on any Drawings, or the Work installed by other contractors, is not guaranteed by City.

4.4.8 Before ordering materials or doing Work, Contractor and each Subcontractor must verify measurements at the Site and will be responsible for the correctness of such measurements. No extra charge or compensation will be allowed because of differences between actual dimensions and the dimensions indicated on the Agreement Documents, including the Drawings.

4.4.9 Ground Level Construction Photography.

4.4.9.1 The Contractor must furnish progress photographs of the project. The photographer selected by the Contractor must be approved by the City and must be either a commercial photographer or an individual experienced and equipped for such photography.

4.4.9.2 The Contractor must deliver to City all photographs taken during that period with each application for payment. If the current photographs do not accompany the application, the application will not be reviewed and will be returned to the Contractor as incomplete.

4.4.9.3 Photographs must be identified by use of typewritten labels affixed to the back of the photograph. The label must provide a description of the view, the direction from which the photograph was taken, the name of the project, City's project number, the name of Contractor and the date of the photography. The stationing must also be included for all pipeline installations.

4.4.9.4 Photographs must be taken during the construction period and must be of aesthetic composition and depict the progress of the Work from the beginning of construction through and including the finished product. City may vary the specified frequency so that significant progress or changes can be recorded on the photographs.

4.4.10 Underground Facilities.

4.4.10.1 The existence and number of facilities as shown on the Plans are estimated from information furnished by the particular utility. Contractor is responsible for field verification and location of all utilities prior to the start of construction. No field work will be allowed to start until Contractor has contacted Arizona 811 and all affected utilities have been located. In addition, Contractor must expose and physically locate all potentially conflicting utilities prior to construction. The actual locations of the utilities must be compared to locations shown on the Plans and any required changes in alignment and grade must be made at the time of construction in consultation with Project Manager. It is generally recognized and Contractor should anticipate that information from Arizona 811 or information from utility companies during project design, frequently fails to disclose all underground facilities. The fact that more utility lines or other underground facilities are located in the Project Site than shown on the Project Plans does not constitute an "unforeseen Condition" and such undisclosed underground facilities do not differ materially from the conditions which Contractor should expect. The provisions of Sections 105.4, 105.6, 107.11 and 109.8.1 of the MAG Uniform Standard Specifications for Public Works Construction apply and are incorporated herein by this reference.

4.4.10.2 Contractor is responsible for all coordination with utility companies. The provisions of Sections 105.4, 105.6, 107.11 and 109.8.1 of the MAG Uniform Standard Specifications for Public Works Construction strictly apply and no additional compensation will be paid to Contractor for delays due to utility work on the project.

4.4.11 Relocation of Existing Water Meters. When a service line has been extended and a line

setter installed in a meter box, City forces will re-install meter. No compression fittings will be utilized.

4.4.12 Water Turn-On or Turn-Off.

4.4.12.1 Contractor must coordinate all water line turn-ons and turn-offs through the City. Application must be made to the Municipal Utility Division and Contractor must pay the established charges. The City will close existing valves, but will not guarantee a bone-dry Shutdown.

4.4.12.2 Contractor must notify all customers affected by the turn-off not less than 48 hours in advance. Notification must be in writing, must give the reason for the turn-off and must give the estimated time and duration that water service will be interrupted. Contractor is also notified that water turn-off will not be permitted on the Day before and after Thanksgiving Day and Christmas Day.

4.4.12.3 No direct payment will be made to Contractor for turn-ons or turn-offs. Costs associated therewith will be included in other items for which direct payment is made.

4.4.13 Tests and Inspections.

4.4.13.1 Contractor must give City timely (at a minimum, twenty-four hours) notice of readiness of the Work for all required inspections, tests or approvals. Contractor must give timely notice to City in advance of backfilling or otherwise covering any part of the Work so that city representative may, if desired, observe such part of the Work before it is concealed. Whenever Contractor varies the normal period during which Work or any portion of it is carried on each Day, Contractor must give timely notice to City so that city representative may, if desired, be present to observe the Work in progress. If Contractor fails to give such timely notice, any Work done in the absence of city representative will be subject to rejection. If Contractor gives such notice to City, but then is not ready for such inspections, tests, approvals or observations at the time so noticed, Contractor must reimburse City for all costs incurred by the attendance of city representatives.

4.4.13.2 If any law, ordinance, rule, regulation, code, or orders of any public body having jurisdiction requires any Work (or part thereof) to be inspected, tested or approved, Contractor (unless another party is specified in the Agreement Documents) must assume full responsibility therefor, pay all costs in connection therewith and furnish City the required certificates of inspection, testing, or approval. Contractor must also be responsible for and must pay all costs in connection with any inspection or testing required by the Specifications in connection with City's acceptance of a manufacturer, fabricator, supplier or distributor of materials or equipment proposed to be incorporated in the Work, or of materials or equipment submitted for approval prior to Contractor's purchase thereof for incorporation in the Work. The cost of all other inspections, tests and approvals required by the Agreement Documents will be paid by City (unless otherwise specified).

4.4.13.3 All inspections, tests or approvals other than those required by law, ordinance, rule, regulation, code or order of any public body having jurisdiction must be performed by organizations acceptable to City and by the Design Professional if so specified.

4.4.13.4 Neither observations by City, the Design Professional nor inspections, tests or approvals by others will relieve Contractor from their obligations to perform the Work in accordance with the Agreement Documents.

4.4.14 Uncovering Work. If any Work that is to be observed, inspected, tested or approved is covered without written concurrence of City, it must, if requested by City be uncovered for observation. Unless Contractor has given City timely notice of Contractor's intention to cover such Work and City has not acted with reasonable promptness in response to such notice, Contractor must furnish all necessary labor, material and bear all the expenses of such uncovering, exposure, observation, inspection and testing and of satisfactory reconstruction, including compensation for additional professional services, and an appropriate deductive Change Order will be issued.

4.4.15 In all cases of interconnection of its Work with existing or other Work, Contractor must verify at the Site all dimensions relating to such existing or other Work. Any errors due to Contractor's failure to so verify all such grades, elevations, locations or dimensions must be promptly rectified by Contractor without any increase in the Agreement Price. Any design errors or omissions noted by Contractor during this review must be reported promptly to City.

4.4.16 Contractor must establish and maintain all construction grades, lines, levels, and benchmarks, and will be responsible for accuracy and protection of same. This Work must be performed or supervised by a licensed civil engineer or surveyor in the State of Arizona.

4.4.17 Contractor must photograph all buried piping of greater than four (4) inches in diameter prior to backfill.

4.4.18 Contractor is responsible for the proper performance of the work of Subcontractors and any acts and omissions in connection with such performance. Nothing in the Agreement Documents is intended or deemed to create any legal or contractual relationship between City and any Subcontractor or Sub-Subcontractor, including but not limited to any third-party beneficiary rights.

4.4.19 Contractor must coordinate the activities of all Subcontractors. Contractor must coordinate performance of the Work with City's Public Works & Utilities Department and other departments or agencies within City. The Design Professional and other contractors or parties involved in the Project. If City performs other work on the Project or at the Site with separate contractors under City's control, Contractor agrees to cooperate and coordinate its activities with those of such separate contractors so that the Project can be completed in an orderly and coordinated manner without unreasonable disruption.

4.4.20 Contractor will not substitute or change any Subcontractor or Supplier without the prior written approval of City. Any substitute or replacement Subcontractor or Supplier must be required to meet the same qualifications and selection criteria and process as the original Subcontractor or Supplier. If a Subcontract/Supplier selection plan has been approved by City, Contractor will follow that plan unless otherwise approved by City in writing.

4.4.21 Contractor must not change or replace any members of its Project team, including Contractor's Representative, Project Manager, or Superintendent, without an explanation for the change being given to City, and receiving prior written approval of the change from City, which approval will not be unreasonably withheld.

4.4.22 Subcontractors whose scope of work has a value greater than 15% of the total Agreement Price are required to furnish performance and payment bonds to Contractor, unless

otherwise approved in writing by City.

4.4.23 Contractor must comply with MAG Specification § 108.2 (E) unless otherwise specified in Agreement Documents.

4.5 **CONTROL OF THE PROJECT SITE**

4.5.1 Throughout all phases of construction, including suspension of Work, Contractor must keep the Site reasonably free from debris, trash and construction wastes to permit Contractor to perform its construction services efficiently, safely and without interfering with the use of adjacent land areas. Prior to Final Acceptance of the Work, or a portion of the Work, Contractor must remove all debris, trash, construction wastes, materials, equipment, machinery and tools arising from the Work or applicable portions thereof to permit City to occupy the Project or a portion of the Project for its intended use.

4.5.2 Contractor must take whatever steps, procedures or means necessary to prevent dust nuisance due to construction operations. The dust control measures must be maintained at all times to the satisfaction of City and in accordance with the requirements of the Maricopa County Bureau of Air Pollution Control Rules and Regulations.

4.5.3 Contractor must maintain Americans with Disabilities Act (ADA) and American National Standards Institute (ANSI) accessibility requirements during construction activities, including without limitation compliance with the 2010 regulations governing implementation of the ADA to the extent applicable. ADA and ANSI accessibility requirements must include, but not be limited to, parking, building access, areas of refuge, and emergency exit paths of travel. Contractor is responsible for the coordination of all Work to minimize disruption to residents and the public.

4.5.4 Only materials and equipment used directly in the Work will be brought to and stored on the Site by Contractor. When equipment is no longer required for Work, it must be removed promptly from the Site. Protection of construction materials and equipment stored at the Site from weather, theft, damage and all other adversity is solely the responsibility of the Contractor.

4.5.5 Contractor agrees all persons working on the Site must act at all times in the best interest of the Project and will comply with all applicable rules and regulations reasonably set forth by City related to the Site. Notwithstanding the foregoing or anything in this Agreement to the contrary, City may remove from the Site any individual who City deems in their reasonable discretion to be creating a disturbance or causing any problem on the Site.

4.5.6 Contractor will be responsible to City for the acts and omissions of Contractor's employees, Subcontractors and their agents and employees, and any other person performing any of the Work under an Agreement with Contractor, or claiming by, through or under Contractor, for all damages, losses, costs and expenses resulting from such acts or omissions.

4.5.7 City may conduct criminal, drive history, and all other requested background checks of Contractor and Subcontractor personnel performing Work or who have access to City's information, data, or facilities in accordance with City's current background check policies, or the provisions of the Project Specific Conditions. Any officer, employee or agent that fails to background check must be replaced immediately.

4.5.8 City will have a final authority, based upon security reasons: (i) to determine when

security clearance of Contractor's and Subcontractor's personnel is required; (ii) to determine the nature of the security clearance, up to and including fingerprinting personnel; and (iii) to determine whether or not any individual or entity may provide Services or perform Work under the Agreement.

4.5.9 If City objects to any personnel for any reasonable cause, then Contractor must, upon notice from City, remove such individual from the Project.

4.6 **PROJECT SAFETY**

4.6.1 The Project and all Work performed in relation thereto is governed by applicable provisions of the federal laws, including but not limited to, the latest amendments of the following:

a. Williams-Steiger Occupational Safety & Health Act of 1970, Public Law, 91-596.

b. Part 1910 and Part 1926 – Occupational Safety and Health Standards, Chapter XVII of Title 29, Code of Federal Regulations.

c. Part 1518 – Safety and Health Regulations for Construction, Chapter XIII of Title 29, Code of Federal Regulations.

4.6.2 Contractor is responsible for safety of the job Site for employees of Contractor as well as for members of the general public and others who may drive or walk through or be at the Site.

4.6.3 Contractor recognizes the importance of performing the Work in a safe manner so as to prevent damage, injury or loss to: (i) all individuals at the Site, whether working or visiting; (ii) the Work, including materials and equipment incorporated into the Work and stored On-Site or Off-Site; and (iii) all other property at the Site or adjacent thereto, including trees, shrubs, lawns, walks, pavements, roadways, structures and utilities not designated for removal, relocation or replacement in the course of construction; and (iv) the owners or tenants of adjacent property and their patrons, employees and invitees.

4.6.4 Contractor assumes responsibility for implementing and monitoring all safety precautions and programs related to the performance of the Work.

4.6.5 Contractor must provide a "competent person' as required by O.S.H.A regulations. The "competent person" must be identified at the Pre-Construction Conference with City advised in writing of any changes.

4.6.6 The "competent person" must make routine daily inspections of the Site and must hold weekly safety meetings with Contractor's personnel, Subcontractors and others as applicable.

4.6.7 Contractor and Subcontractors must comply with all legal and regulatory requirements relating to safety, as well as any City specific safety requirements set forth in the Agreement Documents, provided that such City-specific requirements do not violate any applicable legal and regulatory requirements.

4.6.8 Contractor will immediately report in writing any safety-related injury, loss, damage or accident arising from the Work to Project Manager and, to the extent mandated by Legal Requirements, to all government or quasi-government authorities having jurisdiction over safety-related matters involving the Project or the Work.

4.6.9 Contractor's responsibility for safety under this Section is not intended in any way to relieve Subcontractors and Sub-Subcontractors of their own contractual and legal obligations and responsibility for (i) complying with all Legal Requirements, including those related to health and safety matters, and (ii) taking all necessary measures to implement and monitor all safety precautions and programs to guard against injury, losses, damages or accidents resulting from their performance of the Work.

4.6.10 As between City and Contractor, Contractor is responsible to City for any and all the safety issues relating to the Work on the Project. Contractor must administer and manage the safety program. This will include, but not necessarily be limited to review of the safety programs of each Subcontractor. Contractor must monitor the establishment and execution of compliance with all applicable regulatory and advisory agency construction safety standards. Contractor's responsibility for review, monitoring, and coordination of the Subcontractor's safety programs will not extend to direct control over execution of the Subcontractors' safety programs. Notwithstanding Contractor's safety obligations to City, it is agreed and understood that each individual Subcontractor will remain controlling employer responsible for the safety programs and precautions applicable to its own work and the activities of other's work in areas designated to be controlled by such Subcontractor for purposes of workers compensation insurance coverage.

4.6.11 Nothing in this agreement will relieve Contractor of his responsibility to maintain traffic, structures, etc., as noted on the Plans, Specifications, and Project Specific Conditions. Contractor is responsible to provide all necessary shoring, bracing and trench support as is necessary to maintain traffic structures, etc., as stipulated in the Plans, Specifications, and Special Provisions. If the stability of adjoining building, walls, roadways, etc., is endangered by Contractor's excavation, shoring, bracing, or under pinning must be provided as necessary to ensure project safety. Cost for shoring, bracing, underpinnings, and trench support will be included in the appropriate items listed in the Agreement Price, and no additional payment will be made for this work.

4.7 MATERIALS QUALITY, SUBSTITUTIONS, AND SHOP DRAWINGS

4.7.1 Quality Control and Quality Assurance Testing.

4.7.1.1 All construction materials to be used or incorporated in the Project are subject to inspection, Quality Control & Quality Assurance Testing, and approval or rejection by City. Any material rejected by City must be removed immediately and replaced in an acceptable manner to City at no additional cost to City. When QC/QA tests indicate noncompliance with the Agreement Documents, retesting must be performed by the same testing laboratory that performed the tests that indicated noncompliance.

4.7.1.2 The Contractor must establish, provide, and maintain an effective Quality Control Testing Program (QCTP). The Contractor must develop his own program or procure the services of a consultant. In either case, the party performing the tests must be currently certified by the National Bureau of Standards in the National Voluntary Laboratory Accreditation Program (NVLAP) for construction services or the AASHTO Accreditation Plan (AAP) for Soils, Asphalt and Concrete. The Contractor must provide all support necessary to perform QC and QA testing and sampling (i.e. shoring for testing trench backfill, backhoes, motor graders, loaders, etc. to facilitate testing and sampling). The City will perform the QA testing.

4.7.1.3 The Contractor must submit a written QCTP to the City as a required submittal. The Contractor must not begin Work until the Quality Control Program has been reviewed and

accepted by the City. Resumes of all personnel that will be associated directly or indirectly with the QCTP must be included.

4.7.1.4 The QCTP must include, but not be limited to, on-site/field and laboratory testing of all material delivered to the Site and any existing materials or conditions pertinent to the project.

4.7.1.5 All testing must be under the direction of a Professional Engineer registered in the State of Arizona, knowledgeable in Materials Testing. All "Test Report" forms must be stamped by said Engineer.

4.7.1.6 The written QCTP will set forth the responsibilities of the engineer, project manager, supervisory personnel and each technician assigned to this project. Substitutions or replacement of personnel must require prior written approval by the City. All personnel must be proficient within their assigned duties and possess certification(s) commensurate with their position and responsibilities. The minimum certification(s) for each technician must be NICET Level II, Arizona Technical Testing Institute, American Concrete Institute, or other nationally recognized program applicable to the project and approved by the City of Chandler. The written QCTP must include a description of the required field and construction materials laboratory tests, including required frequencies that meet the minimums established herein.

4.7.1.7 The Contractor must establish a system to record and report all material test results. The daily test reports must include, but not be limited to:

a. Test designation;
b. Date of test;
c. Name of tester;
d. Location of test/sample (station and offset);
e. Product suppliers and product codes (as applicable);
f. Depth/elevation of test/sample;
g. Test result;
h. Control requirement(s);
i. Cause of rejection (if applicable);
j. Results of retests (if applicable); and
k. Remedial action (if applicable).

4.7.1.8 The Contractor must submit test results to the designated City representative.

4.7.1.9 The Contractor must also submit a weekly report to the City summarizing the testing and construction activities completed by emailing the report to the email addresses noted above. All weekly reports must be submitted simultaneously to the Contractor and the City of Chandler. The report must include individual summary sheets for each utility line, structure, and portion of the pavement section. Cores must be numbered sequentially throughout the Project. Re-cores must reference the original core by number and must contain the averaged values for thickness and density. Total pavement thickness must be reported. Vertical location of tests for underground utilities must indicate the depth of the

excavation at the location of the test (i.e., cut to flow line [if applicable], depth to bottom or top of pipe, etc.). Density tests must be numbered sequentially. If the minimum number of tests has not been performed per the written QCTP, this must be stated in the weekly summary report with an explanation of the circumstances.

4.7.1.10 The City will maintain a copy of the Project test results and weekly reports in the Project file. In cases where quality control activities do not comply with the Agreement provisions, the City may:

a. Order the Contractor to replace ineffective or unqualified quality control personnel.

b. Order the Contractor to stop operations until appropriate corrective action is taken.

4.7.1.11 Although minimum testing requirements are specified herein, the Contractor bears full responsibility for the quality of the materials and their installation and may elect to perform additional testing beyond the requirements set forth herein to ensure compliance.

4.7.1.12 The Quality Control requirements contained in this Section are in addition to and separate from Quality Assurance Testing, which will be performed by the City of Chandler or its representative. If the Quality Assurance test results are not in agreement with the Quality Control test results, the Contractor will have the option to retain a third party consultant for referee tests. The third party consultant must meet the same requirements as the consultant performing the Quality Control Testing. The results of the third party will be binding. All cost incurred by the referee testing will be the Contractor's expense. If the Contractor elects not to retain a third party for referee testing, the City of Chandler test results will prevail.

4.7.1.13 Except as otherwise noted within this Section, Work or materials required by this Section are non- pay items. Per MAG Section 101, a non-pay item is an item of Work for which no separate payment will be made, the cost of which is to be included as an incidental cost for associated item(s) included on the Bid Schedule or Schedule of Values.

4.7.2 <u>Trade Names and Substitutions</u>.

4.7.2.1 Substitutions prior to bid will only be considered if in compliance with Arizona Revised Statute § 34-104.

4.7.2.2 Contractor, if requested by City, must submit Samples or any additional information that may be necessary to evaluate the acceptability of the substitution.

4.7.2.3 City will make the final decision and will notify Contractor in writing as to whether the substitution has been accepted or rejected.

4.7.2.4 If City does not respond within 15 working days, Contractor must continue to perform the Work in accordance with the Agreement Documents and the substitution will be considered rejected.

4.7.3 <u>Shop Drawings</u>.

4.7.3.1 Contractor must prepare and submit Shop Drawings which show details of all Work to insure proper installation of the Work using those materials and equipment specified under the approved Plans and Specifications.

4.7.3.2 Contractor must submit a schedule of Shop Drawing submissions, which avoids bulk submissions to the extent reasonably possible, with the Project Schedule for City approval. The schedule of Shop Drawing submissions must include all of the items for which Shop Drawings are required by the Agreement Documents, including the Specifications. Unless otherwise noted, Shop Drawings will not be required for items specified or detailed in the Uniform Standard Specifications and Details or the Technical Specifications.

4.7.3.3 Shop Drawings must be numbered consecutively for each Specification section and must accurately and distinctly present the following:

a. All working and erection dimensions.

b. Arrangements and sectional views.

c. Necessary details, including complete information for making connections between work under this Agreement and work under other Agreements.

d. Kinds of materials and finishes.

e. Parts list and description thereof.

4.7.3.4 Each Drawing or page must include:

a. Project Name, City of Chandler Project Number and descriptions.

b. Submittal date and space for revision dates.

c. Identification of equipment, product or material.

d. Name of Contractor and Subcontractor.

e. Name of Supplier and Manufacturer.

f. Relation to adjacent structure of material.

g. Physical dimensions clearly identified.

h. ASTM and Federal Specifications references.

i. Identification of and justification for deviations from the Agreement Documents.

j. Contractor's stamp, initialed or signed, dated and certifying the review of submittal, certification of field measurements and compliance with Agreement.

k. Location at which the equipment or materials are to be installed.

4.7.3.5 Location will mean both physical location and location relative to other connected or attached material. City will return unchecked any submittal, which does not contain complete data on the Work and full information on related matters.

4.7.3.6 Stock or standard drawings will not be accepted for review unless full identification and supplementary information is shown thereon in ink or typewritten form.

4.7.3.7 Contractor must schedule, prepare and submit all Shop Drawings in accordance with a time-table that will allow its suppliers and manufacturers sufficient time to fabricate, manufacture, inspect, test and deliver their respective products to the project Site in a timely manner so as to not delay the complete performance of the Work.

4.7.3.8 If the Shop Drawings show departures from the Agreement requirements, Contractor must make specific mention thereof in the Letter of Transmittal; otherwise review of such submittals by City will not constitute review of the departure. Review of the Drawings will constitute review of the specific subject matter for which the Drawings were submitted and not of any other structure, material, equipment, or apparatus shown on the Drawings.

4.7.3.9 The review of Shop Drawings will be general and will not relieve Contractor of responsibility for the accuracy of such Drawings, nor for the proper fitting and construction of the Work, nor for the furnishing of materials or Work required by the Agreement. No construction called for by Shop Drawings will be initiated until such Drawings have been reviewed and approved by City.

4.7.3.10 The procedure in seeking review of the Shop Drawings will be as follows:

a. Contractor must submit complete sets of Shop Drawings and other descriptive data as specified in this Section.

b. After Contractor's submittal or resubmittal of Shop Drawings, if Contractor has submitted Shop Drawings in accordance with the City-approved submittal schedule, or upon resubmission, City will be provided with three (3) calendar weeks for review. Should City require additional review time above and beyond the three (3) calendar weeks, Contractor may ask for a time extension or monetary compensation, if they can present valid, factual evidence that actual damages were incurred by Contractor. City will determine the amount of the time extension or the monetary compensation to be awarded Contractor, if any, in accordance with City's Policy Statement for Calculating Delays and Damages, Appendix 1.

4.7.3.11 Contractor will be responsible for all extra costs incurred by City caused by Contractor's failure to comply with the procedure outline above.

4.7.4 Long Lead Time Items. Contractor must submit Shop Drawings, as required by the Engineer, on all long lead items to be furnished and installed as part of the project within 10 Days after the date of the executed Agreement letter issued by City. In addition, Contractor must order all long lead items to be furnished and installed as part of this Project within 3 Days after receiving approved Shop Drawings. For all long lead times for which Shop Drawings are not required, Contractor must order said long lead items within 15 Days after the date of the executed Agreement letter issued by City. Within 2 Days after ordering long lead items, Contractor must supply copies of all purchase orders, along with an accurate delivery schedule from the supplier.

4.7.5 Construction Water. If Contractor uses water from City's water system for construction water, Contractor must obtain a fire hydrant meter from City of Chandler Utility Services (480-782-2280) and all construction water must be obtained through the hydrant meter. Contractor must pay all fees related to the hydrant meter and all water bills for construction water. All cost for meters and construction water will be included in the Agreement Price.

4.8 PROJECT RECORD DOCUMENTS

4.8.1 During the construction period, Contractor must maintain at the jobsite a full-size set of prints of the Construction Document Drawings and Shop Drawings for Project Record Document purposes.

4.8.2 Contractor must mark these Drawings to indicate the actual installation where the installation varies from the original Construction Documents. Contractor must give particular attention to information on elements that will be concealed, which would be difficult to identify or measure and record later. Items required to be marked include but are not limited to:

a. Dimensional changes to the Drawings.

b. Revisions to details shown on Drawings.

c. Locations and depths of underground utilities.

d. Revisions to routing of piping and conduits.

e. Actual equipment locations.

f. Changes made by Change Order or Addendum.

g. Details not on original Agreement Drawings.

4.8.3 Contractor must mark completely and accurately Project Record Drawing sets of Construction Documents.

4.8.4 Contractor must mark Project Record Drawings sets with red erasable colored pencil.

4.8.5 Contractor must note Request for Information (RFI) Numbers and Change Order numbers, etc., as required to identify the source of the change to the Construction Documents.

4.8.6 Contractor must submit Project Record Drawing sets and Shop Drawings to City or its representative for review and comment.

4.8.7 Upon receipt of the reviewed Project Record Drawings from City, Contractor must correct any deficiencies and omissions to the Drawings and submit the final original of the Project Record Drawings to City prior to Final Payment.

4.8.8 Project Manager will review the Project Record Drawings monthly prior to the date established for the Payment Request and will be the sole judge of acceptance of these Drawings.

4.9 WARRANTY AND CORRECTION OF DEFECTIVE WORK

4.9.1 Contractor warrants to City that the construction, including all materials and equipment furnished as part of the Work, will be new unless otherwise specified in the Agreement Documents, of good quality, and free of defects in materials and workmanship. Contractor's warranty obligation excludes defects caused by abuse, alterations, or unreasonable failure to maintain the construction by persons other than Contractor, subcontractors, or others under Contractor's control. Nothing in this warranty will limit any manufacturer's warranty which provides City with greater warranty rights than set forth herein or in the Agreement. Contractor will provide City with all manufacturers' warranties and operation and maintenance manuals upon substantial completion of the Work. Contractor's warranty must be for one (1) year, in accordance with MAG Specification § 108.8, and will commence for all portions of the Work upon Final Acceptance of the entire Work as determined by City under the Agreement. All statutory or other warranties, express or implied, related to latent defects will remain in force and are not limited by this provision.

4.9.2 City May Stop the Work. If the Work is defective, or Contractor fails to supply sufficient skilled workmen or suitable materials or equipment, City may order Contractor to stop the

Work without cost to City, or any portion thereof, until the cause for such order has been eliminated; however, this right of City to stop the Work will not give rise to any duty on the part of City to exercise this right for the benefit of Contractor or any other party.

4.9.3 Correction or Removal of Defective Work.

4.9.3.1 If required by City, Contractor must promptly, without cost to City and as specified by City, either correct any defective Work, whether or not fabricated, installed or completed, or, if the Work has been rejected by City, remove it from the Site and replace it with non-defective Work. Contractor must correct any Work which may be displaced in correcting, removing or replacing defective Work. No compensation will be allowed Contractor for such removal, replacement or remedial Work. Contractor must reimburse City for costs incurred by City due to such correction or removal including but not limited to additional expenses for inspection, testing or observation and for repeated reviews by the City or Design Professional.

4.9.3.2 Upon failure on the part of the Contractor to comply within a reasonably prompt time with any written order of City to correct or remove defective Work, City has authority to cause nonconforming materials or rejected Work to be remedied, removed, or replaced at the Contractor's expense and to deduct the costs from any moneys due or to become due the Contractor.

4.9.4 City May Correct Defective Work. If Contractor fails within a reasonable time after written notice of City to proceed to correct defective Work or to remove and replace rejected Work as required by City or if Contractor fails to perform the Work in accordance with the Agreement Documents (including any requirements of the progress schedule), City may, after 7 Days' written notice to Contractor, correct and remedy any such deficiency. To the extent necessary to complete corrective and remedial action, City may exclude Contractor from all or part of the Work, and suspend Contractor's services related thereto, take possession of Contractor's tools, appliances, construction equipment and machinery at the Site and incorporate in the Work all materials and equipment stored at the Site or for which City has paid Contractor, but which are stored elsewhere. Contractor must allow City, city representatives, agents and employees such access to the Site as may be necessary to enable City to exercise City’s rights under this Section. All direct and indirect costs of City in exercising such rights will be charged against Contractor in an amount verified by City representative, and a Change Order will be issued incorporating the necessary revisions in the Agreement Documents and a reduction in the Agreement Price. Such direct and indirect costs will include, in particular but without limitation, compensation for additional professional services required and all costs of repair and replacement of Work or others destroyed or damaged by correction, removal or replacement of Contractor's defective Work. Contractor will not be allowed an extension of the Agreement Time because of any delay in Contractor’s performance of the Work attributable to the exercise by City or City's rights hereunder.

4.9.5 Correction or Removal of Unauthorized Work.

4.9.5.1 Any Work done beyond the lines and grades shown on the Drawings or established by the Design Professional or any changes in, additions to, or deductions from the Work done without written authority will be considered as unauthorized and will not be paid for. Work so done may be ordered remedied, removed, or replaced at the Contractor's expense.

4.9.5.2 Upon failure on the part of the Contractor to comply promptly with any order of the City,

City will have authority to cause unauthorized Work to be remedied, removed, or replaced at the Contractor's expense and to deduct the costs from any moneys due or to become due the Contractor.

4.9.6 Correction Period - One Year Guarantee.

4.9.6.1 If, within one year after the date of Final Acceptance, or such longer period of time as may be prescribed by law or by the terms of any applicable special guarantee required by the Agreement Documents, or by any specific provision of the Agreement Documents, any Work is found to be defective, Contractor must promptly, without cost to City and in accordance with City's written instructions, either correct such defective Work, or, if it has been rejected by City, remove it from the Site and replace it with non-defective Work. If Contractor does not promptly comply with the terms of such instructions, or in an emergency where delay would cause serious risk of loss or damage, City may have the defective Work corrected or the rejected Work removed and replaced, and all direct and indirect costs of such removal and replacement, including compensation for additional professional services, must be paid by Contractor. Such action by the City will not relieve the Contractor of the guarantees required by this Section or elsewhere in the Agreement Documents.

4.9.6.2 If, in the opinion of the City, defective Work creates a dangerous condition or requires immediate correction or attention to prevent further loss to the City or to prevent interruption of operation of the City, the City will attempt to give the notice required by this Section. If the Contractor cannot be contacted or does not comply with the City's request for correction within a reasonable time as determined by the City, the City may, notwithstanding the provisions of this Section, proceed to make such correction or provide such attention; and the costs of such correction or attention will be charged against the Contractor. Such action by the City will not relieve the Contractor of the guarantees required by this Section or elsewhere in the Agreement Documents.

4.9.6.3 This Section does not in any way limit the guarantee on any items for which a longer guarantee is specified or on any items for which a manufacturer or supplier gives a guarantee for a longer period. The Contractor agrees to act as co-guarantor with such manufacturer or supplier and must furnish the City all appropriate guarantee or warranty certificates upon completion of the Project. No guarantee period, whether provided for in this Section or elsewhere, will in any way limit the liability of Contractor or their sureties or insurers under the indemnity or insurance provisions of these General Conditions and the Project Specific Special Conditions.

4.9.7 Acceptance of Defective Work.

4.9.7.1 If, instead of requiring correction or removal and replacement of defective Work, City may accept Work when in the best interest of the City to do so with appropriate monetary credit from Contractor. If any such acceptance occurs prior to final payment, a Change Order will be issued incorporating the necessary revisions in the Agreement Documents, including appropriate reduction in the Agreement Price; or, if the acceptance occurs after final payment, an appropriate amount must be paid by Contractor to City.

4.9.7.2 Alternatively, City may require Contractor to furnish at Contractor's expense, a special performance guarantee or other surety prior to acceptance of defective work.

4.9.8 The Warranty period begins on the Final Acceptance date noted in the Certificate of Completion, irrespective of early completion by some Subcontractors of their work.

4.9.9 Contractor's warranty obligation must be in accordance with MAG Specifications.

4.9.10 Nothing in the warranties contained in the Agreement Documents are intended to limit any manufacturer's warranty which provides City with greater warranty rights than set forth in this Section or the Agreement Documents. Contractor must provide City with all manufacturers' warranties prior to Substantial Completion, if applicable, or Final Acceptance.

4.9.11 Contractor agrees that it will be responsible to manage and administer the correction of any Work that is not in conformance with the Agreement Documents during the warranty periods set forth in this Section, or during any longer periods to the extent required by the Agreement Documents. A progress payment, or partial or entire use or occupancy of the Project by City, will not constitute acceptance of Work not in accordance with the Agreement Documents.

4.9.12 When notified of a warranty issue, Contractor must respond in writing within 48-hours and must perform warranty Work as soon as material for said repairs are available (as judged solely by City), and in any event Contractor must, take immediate steps to commence and complete correction of nonconforming Work no later than the time period set forth in City's written notification in accordance with the Agreement Documents. This includes the correction, removal or replacement of the nonconforming Work and any damage caused to other parts of the Work affected by the nonconforming Work. If defects develop which are determined by City to be an emergency, City will notify Contractor, via the most expeditious means regarding the nature and condition of the defects. In turn, Contractor must immediately dispatch necessary forces to correct the defect or the emergency condition in accordance with Agreement Documents.

4.9.13 The time periods referenced in this Section apply only to Contractor's obligation to correct nonconforming Work and is not intended to constitute a period of limitations for any other rights or remedies that City may have regarding Contractor's other obligations under the Agreement Documents.

4.9.14 Without limiting the foregoing or anything in these General Conditions or the Agreement to the contrary, Contractor must obtain and provide to City all warranties for any portion of the Project offered by the manufacturer, installer or provider thereof. City and the user of the facility will have the right to the full value and benefit of all such warranties. Contractor must ensure all such warranties are fully transferrable to facilitate the full value of this Section.

4.9.15 Contractor's warranty excludes damages or defects caused by abuse, alterations to the Work not executed by or through Contractor, improper or insufficient maintenance, improper operation, or normal wear and tear and normal usage.

4.9.16 In the event of any noncompliance with this entire Section 4, City may require Contractor to stop or suspend the Work in whole or in part.

SECTION 5 - CITY RESPONSIBILITIES

5.1 CITY PROJECT MANAGER AND INSPECTORS

5.1.1 Project Manager is responsible for providing City-supplied information and approvals in a timely manner to assist Contractor to fulfill its obligations under the Agreement Documents.

5.1.2 Project Manager will also provide Contractor with prompt notice when it observes any failure on the part of Contractor to fulfill its contractual obligations, including any default or defect in the Project or non-conformance with the Drawings and Specifications.

5.1.3 City may utilize Field Inspectors to assist Project Manager during construction in observing performance of Contractor. City's use of Inspectors is for the purpose of assisting Project Manager.

5.1.4 The Inspectors are authorized to inspect all Work and materials furnished. Such inspections may extend to all or part of the Work and to preparation, fabrication or manufacture of the materials to be used. The Inspectors have the authority to issue instructions contrary to the Construction Documents if approved and coordinated with the directions of Project Manager.

5.1.5 The Inspectors have the authority to reject work or materials until any questions at issue can be decided by Project Manager.

5.1.6 The use of Inspectors by City will not make City responsible for or give City control over construction means, methods, techniques, sequences or procedures or for safety precautions or programs or responsibility for Contractor's failure to perform the Work in accordance with Agreement Documents. The Inspectors are not authorized to direct any of Contractor's activities, employees or Subcontractors.

5.2 **DESIGN PROFESSIONAL SERVICES**

City may contract separately with one or more Design Professionals to provide construction administration of the Project. The Design Professional's Agreement, as well as other firms hired by City may be furnished to Contractor. Contractor does not have the right to limit or restrict or reject any Agreement modifications that are mutually acceptable to City and Design Professional.

5.3 **CITY'S SEPARATE CONTRACTORS**

City is responsible for all work performed on the Project or at the Site by separate contractors retained by City. City will contractually require its separate contractors to reasonably cooperate with, and reasonably coordinate their activities so as not to interfere with Contractor in order to enable Contractor to timely complete the Work consistent with the Agreement Documents. Contractor must immediately notify the Project manager, and address the matter in the next monthly status report, if any activities of such separate contractors are expected to interfere, or are interfering, with Contractor and such interference will or could result in any delay in Contractor's performance of the Work.

5.4 **PERMIT REVIEW AND INSPECTIONS**

5.4.1 If requested by Contractor, Project Manager will provide assistance and guidance in obtaining necessary reviews, permits and inspections.

5.4.2 The regulating agencies of City, such as Development and Sustainability, Fire and Planning Departments, enforce legal requirements. The enforcement activities of City are independent and separate from this Agreement.

5.5 **PLANS AND SPECIFICATIONS TO THE CONTRACTOR**.

Contractor will be provided up to five copies of the Agreement Documents as are reasonably necessary for the execution of the Work. Additional copies will be furnished,

upon request, at the cost of reproduction.

SECTION 6 - AGREEMENT TIME

6.1 AGREEMENT TIME

6.1.1 The Agreement Time will start with the Notice to Proceed ("NTP") and end with Final Acceptance.

6.1.2 Beginning on the date of the NTP, Contractor must begin to fulfill Contractor's obligations under the Agreement. Contractor's obligations include providing City and other agencies with any submittals required by the Project Specific Special Provisions, including but not limited to, an approved Project Schedule, Traffic Control Plans, and a Stormwater Pollution Prevention Plan. Contractor must submit all such required submittals before any physical construction work commences on the Site. NTP does not authorize construction work until all agreement insurance, bonds, and schedules are submitted to and accepted by the City.

6.1.3 The Agreement Time will be as set forth in the Project Schedule. Contractor agrees that it will commence performance of the Work and complete the Project through both Substantial Completion and Final Acceptance within the Agreement Time.

6.1.4 Time is of the essence of this Agreement, for the Project, for the Work, and for each phase and designated Milestone thereof.

6.1.5 Failure of Contractor to perform any covenant or condition contained in the Agreement Documents within the time periods specified herein, will constitute a material breach of this Agreement entitling City to terminate the Agreement unless Contractor applies for and receives an extension of time, in accordance with the procedures set forth in the Agreement Documents.

6.1.6 Failure of City to insist upon the performance of any covenant or condition within the time periods specified herein, will not constitute a waiver of Contractor's duty to perform every other covenant or condition within the designated periods, unless a specific waiver is granted in writing for each such covenant or condition.

6.1.7 City's agreement to waive a specific time provision or to extend the time for performance will not constitute a waiver of any other time provisions contained in the Agreement Documents. Failure of Contractor to complete performance promptly within the additional time authorized in the waiver or extension of time agreement constitutes a material breach of this Agreement entitling City to all the remedies set forth herein or provided by law.

6.2 PROJECT SCHEDULE

6.2.1 The Project Schedule must be in Microsoft Project standard file format, must be updated and maintained throughout the Agreement Time, and must contain the following:

6.2.1.1 Detailed representation of all activities for the project, both on-site construction and major procurement. All significant activities together with the resource loading requirements for each and all items appearing on the schedule of values or bid schedule for progress payments must be shown on the Project Schedule or in attached transmittal letter as described in Section 6.2.8.

6.2.1.2 Dependencies between activities must be indicated so that it may establish as to the effect the progress of any one activity would have on other activities and on the Schedule.

6.2.1.3 Activities for submission, review, and approval of all required submittals.

6.2.1.4 An amount of time will be established prior to the final completion date for "punch list and cleanup". No other activities will be scheduled during this period. Punch list and cleanup must be shown on the Project Schedule and must be entirely completed prior to the expiration of the Agreement Time.

6.2.2 Within 10 Days of receipt of City's comments, Contractor must make all required corrections, adjustments, and additions to complete the Project Schedule and resubmit to City for review. City's review of and response to the Project Schedule is for the purpose of: (1) City planning and staffing for the Project as may be required from time to time; (2) ensuring Contractor's general conformance with the scheduling requirements of the Agreement Documents and completion of the Project within the Agreement Time; and (3) monitoring and evaluating the construction status for purposes of approving monthly progress payments. Acceptance of a submitted schedule by City should in no way be construed as an affirmation or admission that the schedule is reasonable or workable by Contractor. The responsibility for completing the Work on the Project within the Agreement Time remains the obligation of Contractor. City's review does not relieve Contractor from compliance with the requirements of the Agreement Documents or be construed as relieving Contractor of its complete and exclusive control over the means, methods, sequences and techniques for executing the work.

6.2.3 The Project Schedule must show milestones, including milestones for City-furnished information, and must include activities for City-furnished material and construction by other contractors when those activities are interrelated with Contractor activities.

6.2.4 The Project Schedule must be revised as required by conditions and progress of the Work, but such revisions do not relieve Contractor of its obligations to complete the Work within the Agreement Time, as adjusted in accordance with the Agreement Documents. No modification to the Agreement Documents or the Agreement Time will be effective unless approved in advance by City.

6.2.5 For all items of materials and equipment that are critical or may require long lead times to acquire, the Project Schedule must show dates for submission, review and approval of submittals, ordering, and delivery.

6.2.6 An updated Project Schedule must be submitted monthly to City as part of the Payment Request. The monthly submittal must include one full size plot of the entire schedule and one electronic copy containing the schedule in Microsoft Project standard file format. In addition, Contractor must, upon request by City, provide a copy of all submitted schedule data in electronic format which must be clearly labeled with the Project description, scheduling program name and version number, and schedule print/data date.

6.2.7 Contractor must provide City with a monthly status report with each Project Schedule detailing the progress of the Work, including: (i) if the Work is proceeding according to schedule, (ii) any discrepancies, conflicts, or ambiguities found to exist in the Agreement Documents that require resolution, and (iii) other information detailing items that require resolution so as not to jeopardize the ability to complete the Work in the Agreement Time.

6.2.8 With each Project Schedule submittal, Contractor must include a transmittal letter including the following:

a. Description of problem tasks, referenced to field instructions or requests for information (RFI's), as appropriate.

b. Current and anticipated delays including:

(i) Cause of the delay.

(ii) Corrective action and schedule adjustments to correct the delay.

(iii) Known or potential impacts and their delay on other activities, milestones, and their impact on the Substantial Completion and Final Acceptance dates.

(iv) Changes in construction sequence.

c. Pending items and status thereof including but not limited to:

(i) Time Extension requests;

(ii) Substantial Completion date status;

(iii) Final Acceptance date status.

d. If ahead of schedule, the number of calendar Days ahead.

e. If behind schedule, the number of calendar Days behind.

f. Other Project or scheduling concerns.

6.2.9 Critical Path Method (CPM).

6.2.9.1 Unless otherwise specified in the Agreement, the Project Schedule must include a Critical Path Method (CPM) diagram schedule showing the sequence of activities, the interdependence of each activity and identifies the Critical Path.

6.2.9.2 The CPM diagram schedule must be in calendar Days and indicate duration, earliest and latest start and finish dates for all activities, and total Float Times for all activities except critical activities. The CPM diagram must be presented in a time scaled graphical format for the Project as a whole.

6.2.9.3 The CPM diagram schedule must indicate all relationships between activities.

6.2.9.4 The activities making the Project Schedule must contain sufficient detail to assure that adequate planning has been done for proper execution of the Work and such that it provides an appropriate basis for monitoring and evaluation the progress of the Work. Individual activities must not exceed 30 Days in length, in most cases.

6.2.9.5 The CPM diagram schedule must be based upon activities, which coincide with the Schedule of Values.

6.2.9.6 The CPM diagram schedule must show all submittals associated with each work activity and the review time for each submittal.

6.2.10 Float Time.

6.2.10.1 The total Float Time within the overall schedule is for the exclusive use of City, but City may approve Contractor's use of Float as needed to meet Agreement Milestones and

the Project completion date.

6.2.10.2 Contractor will not be allowed to sequence, hide, or reallocate Float Time through such strategies, as extending activity duration estimates to consume available Float, using preferential logic, or using extensive crew/resource sequencing, tec. No time extensions will be granted nor delay damages paid until a delay occurs which extends the Work beyond the Agreement Time.

6.2.11 City-Caused Delays. City-caused delays on the Project, if any, may be offset by City-caused time savings (i.e., Critical Path submittals returned in less time than allowed by the Agreement, approval of substitution requests and credit changes which result in savings of time to Contractor, etc.) In such an event, Contractor will not be entitled to receive a time extension or delay damages until all City-caused time savings are exceeded and the Agreement Time is also exceeded.

6.2.12 Rain-Related Delays. Contractor is required, in preparing the Project Schedule to take into account all relevant weather conditions, including normal rainfall and distribution. No additional compensation will be given for any rain-related delays or impacts on the Work or the Project Schedule. No time extension will be granted in the Project Schedule unless the rainfall during the construction of Work is unusually severe, was not reasonably anticipated, and the total rainfall was significantly in excess of the normal rainfall for the Project Site location. Normal rainfall for the Project will be determined from the 10-year average rainfall for the Site as measured by the National Oceanic and Atmospheric Administration or comparable source of reliable information for rainfall in Chandler, Arizona. In addition, the excessive rainfall must have actually impacted Work activities on the Critical Path and caused delay beyond any remaining Float at the time of the rain- caused delay. The burden of documenting normal rainfall, the excessive rainfall and the impact on Critical Path activities is on Contractor. All other provisions in the Agreement Documents relating to claims, including without limitation notice requirements, apply to any claim by Contractor for a rain delay.

6.2.13 City's "Policy Statement for Calculating Delays and Damages," Appendix 1 to these General Conditions, will apply to all claims of delay and delay damages.

6.2.14 Force Majeure. If Contractor is delayed or prevented from the performance of any Work required under this Agreement by reason of acts of God or other causes beyond the control and without fault of Contractor (financial inability excepted), performance of that Work will be excused, but only for the period of the delay. The time for performance of the Work will be extended for a period equivalent to the period of delay. In addition, the parties agree if Contractor's delayed or suspended performance directly arises out of or directly results from the COVID-19 pandemic, Contractor's delayed or suspended performance may be excused as set forth in this clause. Provided, however; Contractor must give the City written notice within 30 days of the occurrence of the event giving rise to COVID-19 pandemic related delayed or suspended performance. For COVID-19 pandemic related delay or suspended performance, the parties must agree in writing to the length of the excused delay or suspended performance. Further, Contractor must obtain the City's written approval to use any allowance established as part of the project for delays and costs related to the COVID-19 pandemic.

6.3 SUBSTANTIAL COMPLETION

6.3.1 When Contractor considers that the Work, phase or a portion thereof, which City agrees in

writing to accept separately, is substantially complete, City will prepare and submit to Contractor a comprehensive Punch List of items to be completed or corrected prior to Final Acceptance and Final Payment. Failure to include an item on such Punch List does not alter the responsibility of Contractor to complete all Work in accordance with the Agreement Documents.

6.3.2 Upon receipt of Contractor's Punch List, Project Manager will make an inspection to determine whether the Work or designated portion thereof is substantially complete. Project Manager may, at Project Manager's sole option, be assisted in such inspection by the Design Professional for the Project. If the inspection by the Project Manager discloses any item, whether or not included on Contractor's Punch List, which is not sufficiently completed in accordance with the Agreement Documents so that City can occupy or utilize the Work, phase or designated portion thereof for its intended use, Contractor must, before issuance of the Certificate of Substantial Completion, complete or correct such item upon notification by Project Manager. In such case, Contractor must then submit a request for another inspection by Project Manager to determine Substantial Completion.

6.3.3 Certificate of Substantial Completion.

6.3.3.1 The Project Manager will not issue a Certificate of Substantial Completion unless and until the Work (or separable units or Phases as provided in the Agreement Documents) is essentially and satisfactorily complete in accordance with the Agreement Documents, such that the Project is ready for use by City for its intended purpose, opening to the general public, full occupancy or use by City (including, without limitation, all separate units, or rooms, facilities, access, income-generating areas, and all areas serving the general public, as applicable, must be ready for full-operation without material inconvenience or discomfort), including, to the extent applicable to the Work, the following: all materials, equipment, systems, controls, features, facilities, accessories and similar elements are installed in the proper manner and in operating condition, inspected and approved; surfaces have been painted; masonry and concrete cleaned with any sealer or other finish applied; utilities and systems connected and functioning; site work complete; permanent heating, ventilation, air condition, vertical transportation and other systems properly operating with proper controls; lighting and electrical systems installed, operable and controlled; paving completed, signage installed, and other Work as applicable, has been performed to a similar state of essential and satisfactory completion. A minor amount of Work, as determined by and at the discretion of the Project Manager, such as installation of minor accessories or items, a minor amount of painting, minor replacement of defective work, minor adjustment of controls or sound systems, or completion or correction of minor exterior work that cannot be completed as a result of weather conditions, will not delay determination of Substantial Completion. If prior written approval is obtained from City for purposes of Substantial Completion, specified areas of the entire Work or Project may be individually certified as Substantially Complete. In no event will Substantial Completion be deemed to have occurred unless and until: (i) a temporary certificate of occupancy has been issued by the appropriate Governmental Authorities (as applicable) and (ii) all terms and Work required under this Agreement have been fulfilled by Contractor and same will have also been approved and accepted by City, subject only to the Punch List items.

6.3.3.2 If requested by City, Contractor must complete and turn-over to City the Project on a phased basis. Each phase will have a separate inspection by the Project Manager, a Punch List generated, and then an inspection by City with final approval and acceptance only after the

Project Manager's Punch List.

6.4 **PARTIAL UTILIZATION**

6.4.1 City at City's option may use and occupy any substantially completed parts of the Work which has specifically been identified in the Agreement Documents, or which City, the Design Professional and Contractor agree constitutes a separately functioning and usable part of the Work that can be used by City for its intended purpose, without significant interference with Contractor's performance of the remainder of the Work, provided, however, if the portion of the Work to be used or occupied has not been found to be substantially complete, City must do so in accordance with Section 6.3 prior to such occupancy.

6.4.2 In lieu of the issuance of a Certificate of Substantial Completion as to part of the Work, City may take over operation of a facility constituting part of the Work whether or not it is substantially complete if such facility is functionally and separately usable; provided that prior to any such takeover, City and Contractor agree in writing as to the division of responsibilities between City and Contractor for security, operation, safety, maintenance, correction period, heat, utilities and insurance with respect to such facility.

6.4.3 Substantial Completion of or City's beneficial occupancy of a part of the Project will not alter the fact that the one-year warranty for the whole Project starts at the date of Final Completion of the whole Project.

6.5 **FINAL ACCEPTANCE**

6.5.1 Unless otherwise expressly agreed to in writing by City, Final Acceptance must be obtained by no later than 30 Days (60 Days for federally funded agreements) after the date of Substantial Completion. Failure to timely obtain Final Acceptance will be a material breach of the Agreement.

6.5.2 Upon receipt of written notice that the Work is ready for final inspection and acceptance, City and Contractor will jointly inspect to verify that the remaining items of Work have been completed. There will be no partial acceptance. Final Acceptance will not occur until all items of Work, including Punch List Items, have been completed to City's satisfaction as reflected in the written Final Acceptance.

6.5.3 Final Payment will not be due, owing, or paid by City until Final Acceptance is issued.

6.5.4 Landscape Establishment Period. Unless otherwise expressly agreed to in writing by City, the Landscape Establishment Period will begin on the date of Final Acceptance of the Project and will run 90 Calendar Days thereafter. Landscape Establishment Period requirements are detailed in General Conditions Appendices, attached herein.

6.6 **CONTINUATION OF WORK**

6.6.1 Permitting Contractor to continue and finish the Work or any part of it after the time fixed for its completion (whether milestone, phase, Substantial Completion or Final Acceptance) or after the date to which the time fixed for any completion may have been extended, does not operate as a waiver by City of any rights under the Agreement Documents, law or equity.

6.6.2 Furthermore, the timely completion of the Work being of the utmost importance under this Agreement, notwithstanding the existence of one or more disputes between the parties

concerning the scope of the Work, the Project Schedule, Agreement Time, payments or any other matter, and further notwithstanding a party's invocation of the Dispute Resolution provisions specified in Appendix 6 of these General Conditions, unless City suspends the Agreement or Contractor's performance pursuant to Section 10 of these General Conditions, Contractor will continue to prosecute the Work, including any Change Order work or Extra Work Orders, in a diligent and timely manner and not stop, slow down or impede by action or inaction the progress of the Work, including commencing performance of and thereafter completing any additional work called out in any Change Order or Extra Work Order issued by Project Manager with the approval of City, so long as City makes payment to Contractor in accordance with Section 8 of these General Conditions.

SECTION 7 - AGREEMENT PRICE

7.1 UNIT PRICE AGREEMENTS

7.1.1 The Agreement Price for all Unit Price Agreements will be the amount set forth in the Agreement or Change Order multiplied by the verified quantity provided.

7.1.2 Measurements of quantities to determine the total Agreement Price must be in accordance with MAG Specification §§ 109.1 and 109.2.

7.1.3 The Unit Price may only be changed as set forth in Section 9 below.

7.2 CHANGE ORDERS

7.2.1 Unit Price Change Orders. The Change Order Price for all Unit Price Change Orders will be the amount set forth in the Change Order multiplied by the verified quantity provided.

7.2.2 Measurements of quantities to determine the total Change Order Price must be in accordance with MAG Specifications §§ 109.1 and 109.2.

7.2.3 The Unit Price may only be changed as set forth in Section 9 below.

7.2.4 MAG Specification § 109.4.1 is modified as follows: Before § 109.4.1, the following is added: Any deduction or increase in the Agreement Price must be supported by a signed, written Change Order fully executed by City, and supported by such backup as the Project Manager may require.

7.3 SALES TAX

Contractor is required to pay all applicable sales tax in accordance with the law of the state of Arizona and this cost must be included in all Agreement Prices. When equipment, materials or supplies generally taxable to Contractor are eligible for a tax exemption due to the nature of the Project, Contractor must assist City in applying for and obtaining such tax credits and exemptions which will be paid or credited to City.

SECTION 8 - PAYMENT

8.1 PAYMENT FOR CONSTRUCTION SERVICES

8.1.1 Payment for the Work will be made in accordance with MAG Standard Specification § 109 as amended below.

8.1.2 Contractor must submit to City for review a completed Contractor Payment Request signed

by Contractor, covering the Work completed as of the date of the Request and accompanied by such supporting documentation as is required by the Agreement Documents and also as City may reasonably require. A Contractor Payment Request will not be considered complete unless it is accompanied by an updated Project Schedule and a certification that the on-site, red lined, as built Drawings are up to date. If payment is requested on the basis of materials and equipment not incorporated in the Work but delivered and suitably, securely stored at the Site or at another location (such as a bonded warehouse) agreed to in writing, the Contractor Payment Request must also be accompanied by such data, satisfactory to City, as will establish City's title to the material and equipment and protect City's interest therein, including applicable insurance. Each subsequent Contractor Payment Request must include an affidavit of Contractor stating that all previous progress payments received on account of the Work have been applied to discharge in full all of Contractor's obligations reflected in prior Contractor Payment Requests.

8.1.3 Except for Work performed under a JOC Agreement, the Contracting Agency will retain 10 percent of all estimates as a guarantee for complete performance of the Agreement in accordance with Arizona Revised Statutes Section 34-221 or 34-607. The Contractor may elect to deposit securities in lieu of retention in accordance with Arizona Revised Statutes Section 34-221, Paragraph C.5. or 34-607, Paragraph B.5.

8.1.4 The payment process functions as follows: Prior to the payment cycle date, Contractor must send a draft Contractor Payment Request to Project Manager. The Project Team will review the Request and agree upon any necessary adjustments. Contractor must certify the final Request by signing and returning to Project Manager.

8.1.5 When construction of the Project is fifty percent (50%) completed, Contractor may request payment of one-half of the retention pursuant to A.R.S. § 34-609(B)(3), subject to all of City's rights to withhold or offset payments, and other rights of City, under the Agreement.

8.1.6 City reserves the right under A.R.S. § 34-609(B)(3) to reinstate the ten percent (10%) retention if City determines that satisfactory progress is not being made.

8.1.7 <u>Contractor's Warranty of Title</u>.

8.1.7.1 Contractor warrants and guarantees that title to all Work, materials and equipment covered by any Contractor Payment Request, whether incorporated in the Project or not, will pass to City at the time of payment, free and clear of all liens, claims, security interests, and encumbrances, provided that this will not preclude the Contractor from installing metering devices or other equipment of utility companies or municipalities, the title of which is commonly retained by the utility company or municipality.

8.1.7.2 No materials, supplies, or equipment for the Work under this Agreement will be purchased subject to any chattel mortgage or under a conditional sale contract or other agreement by which an interest therein, or any part thereof, is retained by the seller or supplier.

8.1.7.3 Nothing contained in this Section will defeat or impair the right of such persons furnishing materials or labor under any bond given by the Contractor for their protection, or any right under any law permitting such persons to look to funds due the Contractor in the hands of the City. The provisions of this Section must be inserted in all subcontracts and material agreements, and notices of its provision must be given to all persons furnishing materials for the Work when no formal agreement is entered into for such materials.

8.2 **PAYMENT UPON SUBSTANTIAL COMPLETION**

8.2.1 No payment will be made upon Substantial Completion, except for a regularly-scheduled monthly progress payment, as allowed by Section 8.2.2.

8.2.2 No further payments will be made to Contractor until Final Acceptance.

8.3 **FINAL PAYMENT**

8.3.1 Subject to all of City's rights to withhold or offset payment, and other rights under the Agreement, Final Payment including remaining retainage will be paid only after:

a. Work has been fully completed (including completion of all incorrect or incomplete work items) and the written Final Acceptance has been issued by City;

b. Necessary operating manuals, any excess materials and supplies necessary for matching materials and supplies incorporated into the Work, acceptable sewer video results (if applicable), and complete "as-built" Drawings (including the Building Information Model, if required by the Agreement Documents) have been delivered to City, as specified in this Section 8.3;

c. Full and unconditional lien waivers and releases by Contractor and any person performing labor or supplying material, machinery, fixtures, or tools for the Work have been delivered to Contractor;

d. All conditions and requirements imposed by City or any financing entity for the corresponding disbursement have been met; and

e. Contractor delivers to City a Contractor Payment Request requesting Final Payment.

8.3.2 Contractor must also submit a signed copy of Contractor's Affidavit Regarding Settlement of Claims, Appendix 3 to these General Conditions, and Certificate of Completion, Appendix 7 to these General Conditions, prior to Final Payment.

8.3.3 In addition, if required under the Project Specific Special Provisions, Contractor must compile a complete equipment list and maintenance manual to be submitted to City as a precondition to Final Payment. The list must include the following items for all equipment supplied under the Plumbing, Electrical, Air Conditioning, Elevator, and other Special Equipment Specifications:

a. Name, Model and Manufacturer.

b. Complete parts lists and Drawings.

c. Local source of supply for replacement parts along with suppliers' telephone numbers.

d. Local service organizations serving the equipment and their telephone numbers.

e. All tags, inspection slips, instruction packages, etc., removed from equipment must be properly identified as to pieces of equipment from which they were taken.

8.3.4 Contractor must also deliver to City, prior to Final Payment, one (1) digital (in the format specified by City), and if requested by City, one (1) hard copy, of any applicable Maintenance manuals. Each manual must include all manufacturer's operation and maintenance instructions and "as-built" Drawings with the list herein specified. It must also include all other diagrams and instructions necessary to properly operate and maintain the equipment, the name, address and telephone number of Contractor and all Subcontractors involved.

8.4 **CITY'S RIGHT TO WITHHOLD PAYMENT**

City may withhold payment to such extent as may be necessary in City's opinion to protect City from loss for which Contractor is responsible, including, without limitation, if any of the following conditions exist:

a. Defective Work not remedied;

b. Third party claims filed or reasonable evidence indicating probable filing of such claims unless security acceptable to City is provided by Contractor;

c. Failure of Contractor to make payments properly to Subcontractors or for labor, materials or equipment;

d. Reasonable evidence that the Work cannot be completed for the unpaid balance of the Agreement Price;

e. Damage to City or another Contractor;

f. Reasonable evidence that the Work will not be completed within the Agreement Time, and that the unpaid balance would not be adequate to cover actual or liquidated damages for the anticipated delay;

g. Failure to carry out the Work in accordance with the Agreement Documents; or

h. Contractor is in default of any of its other obligations under the Agreement Documents.

8.5 **JOINT/DIRECT CHECKS**

To promote the timely completion and progress of the Work or when appropriate and necessary, payments to Contractor may be made jointly to Contractor and its employees, agents, Subcontractors and suppliers, or any of them. For federally funded agreements, see federal provisions for additional requirements for the joint check process.

8.6 **PAYMENT NOT A WAIVER**

No payment (nor use or occupancy of the Project by City) will be deemed acceptance or approval of the Work or as a waiver of any claims, rights, or remedies of City.

8.7 **LIENS AND BOND CLAIMS**

Contractor must make all payments, in the time required, of all labor and materials furnished to Contractor in the course of the Work and must promptly furnish evidence of such payments as City may require. Contractor must pay when due all claims arising out of performance of the Work covered by this Agreement for which a lien may be filed either against the real estate or leasehold interest of City, or against payments due from City to Contractor, or for which a claim may be made against any payment or performance bond or both. To the fullest extent permitted by law, Contractor agrees that no liens or other claims in the nature of a lien against the real estate, leasehold, or other interest of City,

against payment due from City to Contractor, or against any payment or performance bond, must be filed or made in connection with the Work by any party who has supplied professional services, labor, materials, machinery, fixtures, tools, or equipment used in or in connection with the performance of this Agreement, and Contractor agrees to remove or to cause to be removed any such liens or claims in the nature of a lien or bond claim within 10 Days upon receiving notice or obtaining actual knowledge of the existence of such liens or claim. In addition, Contractor agrees to defend, indemnify, and hold harmless City from and against any and all such liens and claims. This paragraph does not apply to claims and liens of Contractor due to non-payment for work performed.

8.8 **FINANCIAL RECORDKEEPING AND CITY'S AUDIT RIGHT**

8.8.1 Records for all Agreements between City and Contractor must, upon reasonable notice, be open to inspection and subject to audit, scanning, and reproduction during normal business working hours. Such audits may be performed by any City's representative or any outside representative engaged by City for the purpose of examining such records. City or its designee may conduct such audits or inspections throughout the term of this Agreement and for a period of five years after Final Payment or longer if required by law. City's representatives may (without limitation) conduct verifications such as counting employees at the Site, witnessing the distribution of payroll, verifying information and amounts through interviews and written confirmations with Contractor employees, field and agency labor, Subcontractors, and vendors.

8.8.2 Contractor's "records" must include any and all information, materials and data of every kind and character, including without limitation, records, books, papers, documents, subscriptions, recordings, agreements, purchase orders, leases, contracts, commitments, arrangements, notes daily diaries, superintendent reports, drawings, receipts, vouchers and memoranda, and any and all other agreements, sources of information and matters that may in City's judgment have any bearing on or pertain to any matters, rights, duties or obligations under or covered by any Agreement Document. Such records must include (hard copy, as well as computer readable data if it can be made available), written policies and procedures; time sheets; payroll registers; payroll records; cancelled payroll checks; subcontract files (including proposals of successful and unsuccessful bidders, bid recaps, negotiation notes, etc.); original bid estimates; estimating work sheets; correspondence; Change Order files (including documentation covering negotiated settlements); back-charge logs and supporting documentation; invoices and related payment documentation; general ledger, information detailing cash and trade discounts earned, insurance rebates and dividends; and any other Contractor records which may have a bearing on matters of interest to City or the Project in connection with Contractor's dealings with City or the Project (all foregoing hereinafter referred to as "records") to the extent necessary to adequately permit evaluation and verification of any or all of the following:

a. Compliance with Agreement requirements for deliverables;

b. Compliance with approved Plans and Specifications;

c. Compliance with § 14.9 below;

d. Compliance with Agreement provisions regarding the pricing of Change Orders;

e. Accuracy of Contractor representations regarding the pricing of invoices; or

f. Accuracy of Contractor representations related to claims submitted by

Contractor or any of their employees.

8.8.3 Contractor must require all payees (examples of payees include Subcontractors, Suppliers, Insurance Carriers, etc.) to comply with the provisions of this Section by including the requirements hereof in a written agreement between Contractor and payee. Contractor will ensure that all payees (including those entering into lump sum agreements) have the same right to audit provisions contained in this Agreement included in their agreements with Contractor.

8.8.4 City's authorized representative(s) (including, without limitation, Project Manager) must have reasonable access to Contractor's facilities, must be allowed to interview all current or former employees to discuss matters pertinent to the performance of this Agreement and must be provided adequate and appropriate work space, in order to conduct audits in compliance with this Section.

8.8.5 If an audit inspection or examination in accordance with this Section, discloses overpricing or overcharges to City (of any nature) by Contractor or Contractor's Subcontractors in excess of $100,000 in addition to making adjustments for the overcharges, the reasonable actual cost of City's audit must be reimbursed to City by Contractor. Any adjustments or payments which must be made as a result of any such audit or inspection of Contractor's invoices or records must be made within a reasonable amount of time (not to exceed 90 Days) from presentation of City's findings to Contractor.

8.8.6 In addition to the normal paperwork documentation Contractor typically furnishes to City, Contractor agrees to furnish, upon written request from City, any of the documentation necessary for City to exercise its audit rights under this Section 8.8 in computer readable file formats (Word, Excel, or .pdf), as City may designate.

8.8.7 City, its authorized representative, and the appropriate agency, reserve the right to audit Contractor's records in compliance with local, state or federal policies, statutes or at City's discretion, within three (3) years of Final Acceptance of the Work.

SECTION 9 - CHANGES TO THE AGREEMENT

9.1 **FIELD ORDERS**

City may authorize minor changes in the Work not involving an adjustment in the Agreement Price or the Agreement Times, which are consistent with the overall intent of the Agreement Documents. These may be accomplished by a written Field Order on the standard form approved and executed by City. Such Field Orders must be binding and Contractor must perform the change promptly. If Contractor believes that a Field Order justifies an increase in the Agreement Price or Agreement Time, Contractor may make a claim therefor as provided in Section 7.2.

9.2 **EXTRA WORK/CHANGES IN THE WORK**

9.2.1 City reserves the right to make such changes in the Plans and Specifications for the Work, as it may deem appropriate and any such change as set forth in a written Change Order must be deemed a part of this Agreement as if originally incorporated herein.

9.2.2 In the event City and Contractor cannot agree on the terms of a Change Order, or when circumstances otherwise require, the Project Manager has the authority to direct the Contractor to perform extra work, if the work in question is an item not provided for in the

Agreement as awarded. The Project Manager will have the authority to determine, based upon factual evidence presented by the Contractor, whether the work in question is an item not provided for in the Agreement as awarded. If the Project Manager directs the Contractor to perform extra work, the Project Manager's instructions will include a price that the Contractor cannot exceed in charging the City for the extra work. Upon receipt of the Project Manager's directions to perform extra work, the Contractor must promptly proceed with the extra work and document the actual cost thereof. Contractor's right to payment for extra work will be determined under Subsection 9.2.4 below. The Contractor is responsible to manage the extra work to ensure that the price limits set by the Project Manager are not exceeded. Contractor must perform the extra work and submit documentation for the actual cost of the extra work to the City. A Change Order will be issued to cover this work.

9.2.3 Contractor will not be entitled to payment for extra work unless a written Change Order, in form and content prescribed by City, has been executed by City. On all requests for Change Orders, Contractor must specify the increased or decreased costs and whether it believes any extensions of time will be necessary to complete its Work as modified by the Change Order. If extra work is performed under Subsection 9.2.2 above, a corresponding Change Order will be prepared, approved and processed by City before payment can be made to Contractor.

9.2.4 In general, pricing for Change Orders will include the same mark-up percentages that were in effect when the Agreement was awarded. The cost or credit to the City resulting from a change in the Work is subject to Appendix 1 (Policy Statement for Calculating Delays and Damages) and will be determined, based on the type of pricing for the Agreement involved, as follows:

a. By mutual acceptance of a lump sum properly itemized in a form acceptable to City;

b. By unit prices stated in the Agreement Documents;

c. When the City determines that a Unit Price Book Job Order associated with a Job Order Agreement requires a Change Order, by using the same Total Cost Data and CCI that are in effect when the Change Order is anticipated to be issued; or

d. By actual cost and a percentage fee covering overhead and profit, as follows:

(i) Contractor will perform the extra work and be compensated for actual cost of labor, materials and equipment.

(ii) Contractor will have the right to add the fee percentage applicable to the Work under the Agreement, or if no such fee has been agreed to by the parties, not more than five percent (5%) to the Subcontractor's prices for authorized extra work performed solely by Subcontractors. Such percentage will include all of Contractor's charges for overhead, profit, administration and supervision.

(iii) Contractor or Subcontractor will have the right to add the fee percentage applicable to Work under the Agreement for self-performed extra work, or if no such fee has been agreed to by the parties, Contractor's or Subcontractor's maximum total allowable additions for overhead, profit, administration and supervision will

not exceed ten percent (10%) of actual verifiable labor, materials and equipment for such self- performed extra work.

9.2.5 Any agreement which modifies the terms of the Agreement (including Change Orders) will be approved in writing by the Project Manager. Once properly executed by both parties, these modifications to the Agreement will have the same effect as if they had been included in the original Agreement.

9.3 **ACCURACY OF CHANGE ORDER PRICING INFORMATION**

9.3.1 Subject to Sections 9.3.2 through 9.3.4, signature by the contracting parties constitutes full accord and satisfaction between City and Contractor for all costs, damages, and expenses of whatever kind of nature, including delay, impact or acceleration damages, which may be occasioned by a Change Order of other modification of the Agreement agreed to in writing.

9.3.2 Accurate Change Order Pricing Information: Contractor agrees that it is responsible for submitting accurate cost and pricing data to City to support its Fixed Price, Unit Price, or Cost Plus Change Order Proposals or other Agreement Price adjustments under the Agreement. Contractor further agrees to submit Change Order proposals with cost and pricing data which is accurate, complete, current, and in accordance with the terms of the Agreement with respect to pricing of change orders. Contractor agrees that any "buy-out savings" on Change Orders will accrue 100% to Owner. "Buy-out savings" are defined as any savings negotiated by the Contractor with a Subcontractor or a Material Supplier after receiving approval of a Change Order amount that was designated to be paid to a specific Subcontractor or Supplier for the Approved Change Order work.

9.3.3 Right to Verify Change Order Pricing Information: Contractor agrees that City, through its designated representative, will have the right to examine, copy, and scan the records of the Contractor, Subcontractor or Sub-Subcontractor's records (during the Agreement period and up to three years after final payment is made on the Agreement) to verify the accuracy and appropriateness of the pricing data used to price all Change Order proposals or claims. Contractor agrees that if City determines the cost and pricing data submitted (whether approved or not) was inaccurate, incomplete, not current, or not in compliance with the terms of the Agreement regarding pricing of Change Orders, an appropriate Agreement Price adjustment will be made. Such post-approval Contact Price adjustments will apply to all levels of contractors and Subcontractors and to all types of Change Order proposals, specifically including Fixed Price, Unit Price, and Cost Plus Change Orders.

9.3.4 Requirements for Detailed Change Order Pricing Information: Contractor agrees to provide a detailed breakdown of allowable labor and labor burden cost (i.e., base wage rate of applicable classifications of workers, payroll taxes, and insurance and benefits costs). This information will be used to evaluate the potential cost of labor and labor burden related to Change Order work. It is intended that this information represent an accurate estimate of the Contractor's actual labor and labor burden cost components. Information is not intended to establish fixed billing or Change Order pricing labor rates. However, at the time Change Orders are priced, the submitted cost data for labor rates may be used to price Change Order work. The accuracy of any such agreed upon labor rate cost components used to price Change Orders will be subject to later audit. Approved Change Order amounts may be adjusted later to correct the impact of inaccurate labor cost components if the agreed upon labor cost components are determined to be inaccurate.

9.4 **EMERGENCIES**

In any emergency affecting the safety of persons or property, Contractor will act, at its discretion, to prevent threatened damage, injury or loss. Any change in the Agreement Price or Agreement Time resulting from emergency work will be determined as provided in this Section.

9.5 **DIFFERING SITE CONDITIONS**

9.5.1 If Differing Site Conditions are encountered at the Project Site, then notice by the observing party must be given to the other party promptly before conditions are disturbed (to the extent practicable) and in no event later than 14 Days after first observance of the conditions. City will promptly investigate such conditions and, if City determines that Differing Site Conditions exist and they materially cause an increase in the cost of, or time required for, performance of any part of the Work, Contractor will be entitled to equitable adjustment in the Agreement Price or Construction Schedule (and other time requirements), or both. If it is determined by City that the conditions at the Project Site are not Differing Site Conditions and no change is justified, then City will so notify Contractor in writing, stating the reasons. Claims in opposition to such determination must be made within 14 Days after City has given notice of its decision. If City and Contractor cannot agree on an adjustment in the Agreement Price or Construction Schedule (and other time requirements), the adjustment may be submitted to dispute resolution as provided these General Conditions.

9.6 **CHANGES IN LAWS, REGULATIONS, OR LEGAL REQUIREMENTS OR TAXES**

In the event of a material change in applicable Laws, Regulations, or Legal Requirements, or taxes subsequent to the date of the Agreement by the parties, Contractor may be entitled to a Change Order, in City's discretion, to the extent Contractor can document to the satisfaction of City that such change significantly increases Contractor's actual cost of performance of the Work.

SECTION 10 -SUSPENSION AND TERMINATION

10.1 **SUSPENSION**

City may suspend the Agreement and Contractor's performance in accordance with MAG Specifications § 105.1 and 108.7.

10.2 **TERMINATION BY THE CITY FOR CAUSE**

10.2.1 MAG Specifications § 108.11 applies to the Agreement.

10.2.2 City may also terminate the Agreement if City determines, in its sole discretion that Contractor has:

a. After prior written notice, refused or failed to supply enough properly skilled workers or proper materials;

b. After prior written notice, failed to make payment to Subcontractors for materials or labor in accordance with the respective agreements between Contractor and the Subcontractors;

c. After prior written notice, disregards laws, ordinances, or rules, regulations or orders of a public authority having jurisdiction;

d. After prior written notice, repeatedly failed to comply with written directives from City;

e. Is adjudged as bankrupt or insolvent;

f. Made a general assignment for the benefit of creditors;

g. Appointed a trustee or receiver for itself or any of its property;

h. Filed a petition to take advantage of any debtor's act, or to reorganize under the bankruptcy or similar laws; or

i. Otherwise breached a provision of the Agreement Documents or any other Agreement between City and Contractor.

10.2.3 When any of the above reasons exist, City may terminate the Agreement, without prejudice to any other rights or remedies of City, after giving Contractor and Contractors' surety, if any, 7 Days written notice of City's intent to terminate the Agreement and Contractor's failure to cure any such reasons. Upon such termination, City may: (1) take possession of the Site and of all materials thereon owned by Contractor; or (2) finish the Work by whatever reasonable method City may deem expedient. When City terminates the Agreement for one of the reasons state above, Contractor will not be entitled to receive further payment until the Work is finished. If the unpaid balance of the Agreement Price existing at the time of such termination exceeds the costs and expenses of finishing the Work and any other damages incurred by City, such excess will be paid to Contractor. If such costs, expenses and damages exceed such unpaid balance, Contractor must pay the difference to City. This obligation for payment will survive termination of the Agreement.

10.3 **TERMINATION BY CITY FOR CONVENIENCE**

City may also terminate the Agreement at any time for its convenience upon 7 Days written notice to Contractor specifying the termination date. In the event of termination which is not the fault, in whole or in part, of Contractor, City will pay to Contractor only such compensation, including reimbursable expenses, due for Work properly performed on the Project prior to the termination date. Upon any termination of the Agreement, no further payments will be due from City to Contractor.

10.4 **A.R.S. § 38-511**

The Agreement is subject to, and may be terminated by City in accordance with, the provisions of A.R.S. § 38-511.

SECTION 11 -INSURANCE AND BONDS

11.1 **INSURANCE REQUIREMENTS**

11.1.1 After Agreement award, the Contractor must furnish the City a certificate of insurance on a standard insurance industry ACORD form. The ACORD form must be issued by an insurance company authorized to transact business in the State of Arizona possessing a current A.M. Best, Inc. rating of A-7, or better and legally authorized to do business in the State of Arizona with policies and forms satisfactory to City. Provided, however, the A.M. Best rating requirement may not be deemed to apply to required Worker's Compensation coverage.

11.1.2 The Contractor and any of its Subcontractors must procure and maintain, until all of their obligations have been discharged, including any warranty periods under this Agreement are satisfied, the insurances set forth below.

11.1.3 The insurance requirements set forth below are minimum requirements for this Agreement and in no way limit the indemnity covenants contained in this Agreement.

11.1.4 The City in no way warrants that the minimum insurance limits contained in this Agreement are sufficient to protect Contractor from liabilities that might arise out of the performance of the Agreement services under this Agreement by Contractor**,** its agents, representatives, employees, or Subcontractors and the Contractor is free to purchase any additional insurance as may be determined necessary.

11.1.5 Failure to demand evidence of full compliance with the insurance requirements in this Agreement or failure to identify any insurance deficiency will not relieve the Contractor from, nor will it be considered a waiver of its obligation to maintain the required insurance at all times during the performance of this Agreement.

11.1.6 Use of Subcontractors: If any Work is subcontracted in any way, the Contractor must execute a written agreement with Subcontractor containing the same Indemnification Clause and Insurance Requirements as the City requires of the Contractor in this Agreement. The Contractor is responsible for executing the Agreement with the Subcontractor and obtaining Certificates of Insurance and verifying the insurance requirements.

11.2 **MINIMUM SCOPE AND LIMITS OF INSURANCE**

11.2.1 The Contractor must provide coverage with limits of liability not less than those stated below.

11.2.1.1 Commercial General Liability-Occurrence Form. Contractor must maintain "occurrence" form Commercial General Liability insurance with a limit of not less than $2,000,000 for each occurrence, $4,000,000 aggregate. Said insurance must also include coverage for products and completed operations, independent contractors, personal injury and advertising injury. If any Excess insurance is utilized to fulfill the requirements of this paragraph, the Excess insurance must be "follow form" equal or broader in coverage scope than underlying insurance.

11.2.1.2 Automobile Liability-Any Automobile or Owned, Hired and Non-Owned Vehicles. Contractor must maintain Business/Automobile Liability insurance with a limit of $1,000,000 each accident on Contractor owned, hired, and non-owned vehicles assigned to or used in the performance under this Agreement. If any Excess or Umbrella insurance is utilized to fulfill the requirements of this paragraph, the Excess or Umbrella insurance must be "follow form" equal or broader in coverage scope than underlying insurance.

11.2.1.3 Workers Compensation and Employers Liability Insurance. Contractor must maintain Workers Compensation insurance to cover obligations imposed by federal and state statutes having jurisdiction of Contractor employees engaged in the performance of Work under this Agreement and must also maintain Employers' Liability insurance of not less than $1,000,000 for each accident and $1,000,000 disease for each employee.

11.2.1.4 Builders' Risk/Installation Floater Insurance. The Contractor bears all responsibility for loss to all equipment or Work under construction. Unless waived in writing by the City the Contractor will purchase and maintain in force Builders' Risk/Installation Floater insurance on the entire Work until completed and accepted by the City. This insurance will be Special Causes of Loss policy form, (minimally including perils of fire, flood, lightning, explosion, windstorm and hail, smoke, aircraft and vehicles, riot and civil commotion, theft, vandalism, malicious mischief, and collapse), completed value, replacement cost policy form equal to the Agreement Price and all subsequent modifications. The Contractor's Builders'

Risk/Installation Floater insurance must be primary and not contributory.

a. Builders' Risk/Installation Floater insurance must cover the entire Work including reasonable compensation for architects and engineers' services and expenses and other "soft costs" made necessary by an insured loss. Builders' Risk/Installation Floater insurance must provide coverage from the time any covered property comes under the Contractor's control and or responsibility, and continue without interruption during course of construction, renovation and or installation, including any time during which any Project property or equipment is in transit, off Site, or while on Site for future use or installation. Insured property must include, but not be limited to, scaffolding, false work, and temporary buildings at the Site. This insurance must also cover the cost of removing debris, including demolition as may be legally required by operation of any law, ordinance, regulation or code.

b. The Contractor must also purchase and maintain Boiler and Machinery insurance with the same requirements as Builders' Risk/Installation Floater insurance cited above if the Work to be performed involves any exposures or insurable property normally covered under a Boiler and Machinery insurance policy or made necessary as required by law or testing requirements in the performance of this Agreement. The Contractor will be responsible for any and all deductibles under these policies and the Contractor waives all rights of recovery and subrogation against the City under the Contractor- Builders' Risk/Installation Floater insurance described herein.

c. Builders' Risk/Installation Floater Insurance must be maintained until whichever of the following first occurs: (i) final payment has been made; or, (ii) until no person or entity, other than the City, has an insurable interest in the property required to be covered.

d. The Builders' Risk/Installation Floater insurance must be endorsed so that the insurance will not be canceled or lapse because of any partial use or occupancy by the City.

e. The Builders Risk/Installation Floater insurance must include as named insureds, the City, the Contractor, and all tiers of Subcontractors and others with an insurable interest in the Work who will be named as additional insureds unless they are able to provide the same level of coverage with the City and Contractor named as additional insureds. Certificates must contain a provision that the insurance will not be canceled or materially altered without at least 30 Days advance notice to the City. The City must also be named as a Loss Payee under the Builders' Risk/Installation Floater coverage.

f. The Builders Risk/Installation Floater insurance must be written using the Special Causes of Loss policy form, replacement cost basis.

g. All rights of subrogation under the Builders Risk/Installation Floater insurance are, by this Agreement, waived against the City, its officers, officials, agents and employees.

h. The Contractor is responsible for payment of all deductibles under the Builders' Risk/Installation Floater insurance policy.

11.2.1.5 Pollution Liability Insurance (Including Errors and Omissions). For Job Orders, Pollution Liability Insurance is only required if applicable and determined on a project specific basis. Contractor must maintain Pollution Liability Insurance with a limit of not less than $5,000,000 per loss, $5,000,000 aggregate for losses caused by pollution conditions including coverage for bodily injury, property damage, defense costs, clean-up costs, and completed operations that arise from the operations of Contractor as described in this Agreement.

a. The policy must provide for complete professional service coverage, including coverage for pollution liability that is a result of a breach of professional duties.

b. The policy must provide for protection again claims for third-party bodily injury, property damage, or environmental damage caused for pollution conditions resulting from general contracting activities for which Contractor is legally liable.

c. The policy must provide for cleanup costs when mandated by governmental entities, when required by law, or as a result of third-party claims.

d. Completed Operations Coverage must be kept in place for up to the statute of repose.

e. The policy must be endorsed to include the following additional insured language: "City, its elected officials, trustees, employees, agents, and volunteers must be named as additional insureds with respect to liability arising out of the activities performed by, or on behalf of Contractor".

f. If Work under this Agreement requires the transportation of any hazardous material or regulated substances, Contractor must carry Auto Liability with a CA 9948 endorsement or equivalent.

g. If Work under this Agreement requires the disposal of any hazardous materials from the job site, Contractor must obtain a certificate of insurance for Pollution Legal Liability from the disposal site operator with a limit of not less than $5,000,000 per loss, $5,000,000 aggregate.

11.3 **ADDITIONAL POLICY PROVISIONS REQUIRED**

11.3.1 Self-Insured Retentions or Deductibles. Any self-insured retentions and deductibles must be declared and approved by the City. If not approved, the City may require that the insurer reduce or eliminate any deductible or self-insured retentions with respect to the City, its officers, officials, agents, employees, and volunteers.

11.3.2 The Contractor's insurance must contain broad form contractual liability coverage.

11.3.3 The Contractor's insurance coverage must be primary insurance with respect to the City, its officers, officials, agents, and employees. Any insurance or self-insurance maintained by the City, its officers, officials, agents, and employees will be in excess of the coverage provided by the Contractor and must not contribute to it.

11.3.4 The Contractor's insurance must apply separately to each insured against whom claim is made or suit is brought, except with respect to the limits of the insurer's liability.

11.3.5 Coverage provided by the Contractor must not be limited to the liability assumed under the

indemnification provisions of this Agreement.

11.3.6 The policies must contain a severability of interest clause and waiver of subrogation against the City, its officers, officials, agents, and employees, for losses arising from Work performed by the Contractor for the City.

11.3.7 The Contractor, its successors and or assigns, are required to maintain Commercial General Liability insurance as specified in this Agreement for a minimum period of 3 years following completion and acceptance of the Work. The Contractor must submit a Certificate of Insurance evidencing Commercial General Liability insurance during this 3 year period containing all the Agreement insurance requirements, including naming the required Additional Insureds set forth herein.

11.3.8 If a Certificate of Insurance is submitted as verification of coverage, the City will reasonably rely upon the Certificate of Insurance as evidence of coverage but this acceptance and reliance will not waive or alter in any way the insurance requirements or obligations of this Agreement.

11.3.9 Insurance Cancellation During Agreement Term.

11.3.9.1 If any of the required policies expire during the life of this Agreement, the Contractor must forward renewal or replacement Certificates to the City within 10 Days after the renewal date containing all the required insurance provisions.

11.3.9.2 Each insurance policy required by the insurance provisions of this Agreement must provide the required coverage and must not be suspended, voided or canceled except after 30 Days prior written notice has been given to the City, except when cancellation is for non-payment of premium, then 10 Days prior notice may be given. Such notice must be sent directly to Chandler Law-Risk Management Department, Post Office Box 4008, Mailstop 628, Chandler, Arizona 85225. If any insurance company refuses to provide the require notice, the Contractor or its insurance broker must notify the City of any cancellation, suspension, non-renewal of any insurance within 7 Days of receipt of insurers' notification to that effect.

11.3.10 City as Additional Insured. The above-referenced policies are to contain, or be endorsed to contain, the following provisions:

11.3.10.1 The Commercial General Liability and Automobile Liability policies are to contain, or be endorsed to contain, the following provisions: The City, its officers, officials, agents, and employees are additional insureds with respect to liability arising out of activities performed by, or on behalf of, the Contractor including the City's general supervision of the Contractor; Products and Completed Operations of the Contractor; and automobiles owned, leased, hired, or borrowed by the Contractor.

11.3.10.2 The City, its officers, officials, agents, and employees must be additional insureds to the full limits of liability purchased by the Contractor even if those limits of liability are in excess of those required by this Agreement.

11.4 BONDS AND OTHER PERFORMANCE SECURITY

11.4.1 After Agreement award, Contractor must provide a Performance Bond and a Payment Bond, each in an amount equal to the full amount of the Agreement Price.

11.4.2 Each such bond must be executed by a surety company or companies holding a Certificate

of Authority to transact surety business in the State of Arizona, issued by the Director of the Arizona Department of Insurance and must be named in the current list of "Companies Holding Certificates of Authority as Acceptable Sureties on Federal Bonds and as Acceptable Reinsuring Companies" as published in Circular 570 (amended) by the Audit Staff Bureau of Accounts, U.S. Treasury Department. A copy of the Certificate of Authority must accompany the bonds. The Certificate must have been issued or updated within two (2) years prior to the execution of this Agreement. The bonds must be written or countersigned by an authorized representative of the surety who is either a resident of the state of Arizona or whose principal office is maintained in this state, as by law required.

11.4.3 The bonds must be made payable and be acceptable to City. The bond forms for the performance and payment bonds must be in the forms required under A.R.S. § 34-221, *et. Seq.,* as in Appendices 4 and 5 of these General Conditions.

11.4.4 Upon the request of any person or entity appearing to be a potential beneficiary of bonds covering payment of obligations arising under the Agreement Documents, Contractor must promptly furnish a copy of the bonds or must permit a copy to be made.

11.4.5 All bonds submitted for this Project must be provided by a company which has been rated AM Best rating of A- or better for the prior four quarters by the latest edition of the 'Results Best's Key Rating Guide (Property/Casualty)" published by the A.M. Best Company.

11.4.6 Personal or individual bonds are not acceptable.

11.4.7 If the surety on any Bond furnished by Contractor is declared a bankrupt or becomes insolvent, or Contractor's right to do business is terminated in any state where any part of the Project is located, or it ceases to meet the requirements of this Section 11.4, Contractor must within 5 Days thereafter substitute another Bond and surety, both of which must be acceptable to City.

SECTION 12 - INDEMNIFICATION

12.1 To the extent permitted by law, the Contractor and its owners, officers, directors, agents, employees, and subconsultants (collectively "Indemnitor") must indemnify, save, and hold harmless the City and its officers, officials, agents, and employees (collectively "Indemnitee") from any and all claims, actions, liabilities, damages, losses, or expenses (including court costs, attorneys' fees, and costs of claim processing, investigation, and litigation) (collectively "Claims") caused or alleged to be caused, in whole or in part, by the negligent, reckless, wrongful, or willful acts, errors, or omissions of Indemnitor in connection with this Agreement. This indemnity includes any Claim or amount arising out of or recovered under workers' compensation laws or on account of Indemnitor's failure to conform to any federal, state, or local law, statute, ordinance, rule, regulation, or court decree. Indemnitor must indemnify Indemnitee from and against any and all Claims, except those arising solely from Indemnitee's own negligent, reckless, wrongful, or willful acts, errors, or omissions. Indemnitor is responsible for primary loss investigation, defense, and judgment costs where this indemnification applies. In consideration of the award of this Agreement, Indemnitor agrees to waive all rights of subrogation against Indemnitee for losses arising from or related to this Agreement. Indemnitor's obligations under this provision survive the termination or expiration of this Agreement.

SECTION 13 -DISPUTE RESOLUTION

13.1 All disputes arising out of or relating to the Agreement, the Work or the Project, other than termination under Section 10, will be resolved pursuant to the Dispute Resolution process set forth in Appendix 6 of these General Conditions, and not pursuant to MAG Specifications § 110.

13.2 Contractor agrees that during any dispute between the parties, Contractor will continue to perform its obligations under the Agreement until such dispute is resolved.

13.3 Notwithstanding any other provision in this Agreement, City has the right to immediately file in court and pursue an action for a temporary restraining order and injunctive relief against Contractor if City determines that such action is necessary to protect its interests under the Agreement, to obtain specific performance of any provision of the Agreement, to advance the completion of the Project, or to protect health, welfare and safety.

SECTION 14 - MISCELLANEOUS PROVISIONS

14.1 AGREEMENT DOCUMENTS

14.1.1 The Agreement Documents are intended to permit the parties to complete the Work and all obligations required by the Agreement Documents within the Agreement Times for the Agreement Price. The Agreement Documents are intended to be complementary and interpreted in harmony so as to avoid conflict, with words and phrases interpreted in a manner consistent with construction and design industry standards.

14.1.2 It is the intent of the Agreement Documents to describe a functionally complete Project (or part thereof) to be constructed in accordance with the Agreement Documents. Any labor, documentation, services, materials, or equipment that may reasonably be inferred from the Agreement Documents or from prevailing custom or trade usage as being required to produce the intended result must be provided by Contractor whether or not specifically called for at no additional cost to City.

14.1.3 The Agreement Documents establish the rights and obligations of the parties and include the Agreement, Addenda (which pertain to the Agreement Documents), Contractor's Bid or Proposal (including documentation accompanying the Bid and any post-Bid documentation submitted prior to Agreement award) when attached as an exhibit to the Agreement, the accepted Project Schedule, the Notice to Proceed, the Performance Bond, the Payment Bond, Project Design, Engineering and Specifications, these General Conditions, the Project Specific Special Provisions, Technical Specifications, Agreement Drawings, as the same may be more specifically identified in the Agreement, Change Orders, Work Change Directives, Field Orders and the written interpretations and clarifications of the Design Professional or City representative and Modifications issued after execution of the Agreement. Approved Shop Drawings and the reports and drawings of subsurface and physical conditions are not Agreement Documents.

14.1.4 In the event of any inconsistency, conflict, or ambiguity between or among the Agreement Documents, the Agreement Documents will take precedence as follows from highest to lowest: Change Orders, Addenda, Agreement, Project Specific Special Provisions, General Conditions, Technical Specifications, Drawings/Plans, Chandler Amendments to MAG Standard Specifications and Chandler Standard Details, and MAG Uniform Standard Specifications and Details for Public Works Construction. If applicable to this Agreement, Federal Provisions prevail.

14.1.5 On the Drawings, given dimensions will take precedence over scaled measurements and large scale drawings over small-scale drawings.

14.1.6 Clarifications and interpretations of the Agreement Documents will be issued by the Design Professional through the City.

14.1.7 The headings used in this Agreement or any other Agreement Documents, are for ease of reference only and must not in any way be construed to limit or alter the meaning of any provision.

14.1.8 The Agreement Documents form the entire agreement between City and Contractor. No oral representations or other agreements have been made by the parties except as specifically stated in the Agreement Documents.

14.1.9 The Agreement Documents may not be changed, altered, or amended in any way except in writing signed by a duly authorized representative of each party in the form of a Change Order.

14.1.10 Re-Use of Documents. Neither Contractor nor any Subcontractor, manufacturer, fabricator, supplier or distributor will have or acquire any title to or ownership rights in any of the Drawings, Specifications or other documents (or copies of any thereof) prepared by or bearing the seal of the Design Professional; and they must not re-use any of them on extensions of the Project or any other project without written consent of City and the Design Professional and specific written verification or adaptation by the Design Professional.

14.2 REFERENCE STANDARDS

14.2.1 Reference to standards, specifications, manuals, or codes of any technical society, organization, or association, or to Laws or Regulations, whether such reference be specific or by implication, will mean the standard, specification, manual, code, or Laws or Regulations in effect at the time of opening of Bids (or on the Effective Date of the Agreement if there were no Bids), except as may be otherwise specifically stated in the Agreement Documents.

14.2.2 The provisions of any such standard, specification, manual or code, or any instruction of a Supplier will not change the duties or responsibilities of City, Contractor, Design Professional or Project Manager, or any of their Subcontractors, consultants, agents, or employees from those set forth in the Agreement Documents, nor will any such provision or instruction assign to City, Contractor, Design Professional, or any of their agents, or employees any duty or authority to supervise or direct the performance of the Work or any duty or authority to undertake responsibility inconsistent with the provisions of the Agreement Documents.

14.3 COMPLIANCE WITH ARIZONA LAW AND FEDERAL LAW

14.3.1 Compliance with A.R.S. § 41-4401. Pursuant to the provisions of A.R.S. § 41-4401, the Contractor hereby warrants to the City that the Contractor and each of its subcontractors ("Subcontractors") must comply with all Federal Immigration laws and regulations that relate to the immigration status of their employees and the requirement to use E-Verify set forth in A.R.S. §23-214(A).

14.3.2 A breach of the Contractor Immigration Warranty constitutes a material breach of this Agreement and subject to penalties up to and including termination of this Agreement.

14.3.3 The City retains the legal right to inspect the papers of any Contractor or Subcontractor employee who works on this Agreement to ensure that the Contractor or Subcontractor is complying with the Contractor Immigration Warranty. The Contractor agrees to assist the City in the conduct of any such inspections.

14.3.4 The City may, at its sole discretion, conduct random verifications of the employment records of the Contractor and any Subcontractors to ensure compliance with Contractors Immigration Warranty. The Contractor agrees to assist the City in performing any such random verifications.

14.3.5 The provisions of this Article must be included in any agreement the Contractor enters into with any and all of its subcontractors who provide services under this Agreement or any subcontract. "Services" are defined as furnishing labor, time or effort in the State of Arizona by a contractor or subcontractor. Services include construction or maintenance of any structure, building or transportation facility or improvement to real property.

14.4 **HAZARDOUS ENVIRONMENTAL CONDITIONS**

14.4.1 Contractor will not be responsible for any Hazardous Environmental Condition uncovered or revealed at the Site which was not shown or indicated in Drawings or Specifications or identified in the Agreement Document to be within the scope of the Work. Contractor will be responsible for a Hazardous Environmental Condition created with any materials brought to the Site by Contractor, Subcontractors, Suppliers, or anyone else for whom Contractor is responsible.

14.4.2 If Contractor encounters a Hazardous Environmental Condition or if Contractor or anyone for whom Contractor is responsible creates a Hazardous Environmental Condition. Contractor must immediately:

a. Secure or otherwise isolate such condition;

b. Stop all Work in connection with such condition and in any area affected thereby; and

c. Notify City and promptly thereafter confirm such notice in writing.

14.4.3 City will promptly retain a qualified expert to evaluate such condition or take corrective action, if any.

14.4.4 Contractor will be responsible for any and all civil or criminal penalties, fines, damages, or other charges imposed by any regulatory agency or court for sewage discharges that are in violation of applicable statutes and laws and that are a result, direct or indirect, of work performed under this Agreement. Contractor will also be responsible for reimbursement to City for administration, reporting, and tracking expenses required as a result of any spill event. In the event the regulatory agency or court imposes a probationary period, Contractor must post bond for the probationary period to ensure that all such costs are reimbursed to City. This responsibility will apply whether penalties are imposed directly on Contractor or any of its Subcontractors, or the City of Chandler. Contractor must defend and indemnify City against such penalties. Regulatory agencies may include, but are not limited to, the Arizona Department of Environmental Quality (ADEQ) and the United States Environmental Protection Agency (USEPA).

14.5 **COOPERATION AND FURTHER DOCUMENTATION**

Contractor agrees to provide City such other duly executed documents as may be reasonably requested by City to implement the intent of the Agreement Documents.

14.6 **ASSIGNMENT**

Neither Contractor nor City will, without the written consent of the other assign, transfer or sublet any portion of this Agreement or part of the Work or the obligations required by the Agreement Documents, any such assignment will be void, will transfer no rights to the purported assignee, and would be a material breach of the Agreement.

14.7 **SUCCESSORS**

Contractor and City intend that the provisions of the Agreement Documents are binding upon the parties, their employees, agents, heirs, successors and assigns.

14.8 **LAWFUL PRESENCE**

Pursuant to A.R.S. §§ 1-501 and 1-502, City is prohibited from awarding an agreement to any natural person who cannot establish that such person is lawfully present in the United States. To establish lawful presence, a person must produce qualifying identification and sign a City-provided affidavit affirming the identification provided is genuine. This requirement will be imposed at the time of agreement award. This requirement does not apply to business organizations such as corporations, partnerships, or limited liability companies.

14.9 **NO BOYCOTT OF ISRAEL CERTIFICATION**

By Contractor's signature on this Agreement, Contractor certifies under A.R.S. § 35-393.01 that Contractor is not currently engaged in and for the duration of this Agreement will not engage in a boycott of Israel.

14.10 **NO THIRD PARTY BENEFICIARY**

Nothing under the Agreement Documents will be construed to give any rights or benefits in the Agreement Documents to anyone other than City and Contractor, and all duties and responsibilities undertaken pursuant to the Agreement Documents will be for the sole and exclusive benefit of City and Contractor and not for the benefit of any other party, unless otherwise expressly set forth in the Agreement Documents.

14.11 **GOVERNING LAW AND VENUE**

The Agreement and all Agreement Documents will be deemed to be made under, and will be construed in accordance with and governed by the laws of the State of Arizona without regard to the conflicts or choice of law provisions thereof. Any court action to enforce any provision of the Agreement or to obtain any remedy with respect hereto must be brought in the Superior Court, Maricopa County, Arizona, and for this purpose, each party hereby expressly and irrevocably consents to the jurisdiction and venue of such Court.

14.12 **SEVERABILITY**

If any provision of the Agreement Documents or the application thereof to any person or circumstance will be invalid, illegal or unenforceable to any extent, the remainder of the affected provision, the remainder of the Agreement Documents, and the application thereof will not be affected and will be enforceable to the fullest extent permitted by law.

14.13 **LEGAL REQUIREMENTS**

At all times relevant to its entry into this Agreement and performance of the Services and the Work, Contractor must fully comply with all Laws, Regulations, or Legal Requirements applicable to City, the Project, and the Agreement, including, without limitation, those set

forth on Exhibit C of the Agreement.

14.14 **PARTIAL INVALIDITY**

If any provision of the Agreement is held by a court of competent jurisdiction to be invalid, void or unenforceable, the remaining provisions will nevertheless continue in full force without being impaired or invalidated in any way.

14.15 **ATTORNEYS' FEES**

Should either party to the Agreement bring an action to enforce any provision of the Agreement, the prevailing party will be entitled to recover reasonable attorneys' fees and costs in connection therewith.

14.16 **CONFLICT OF INTEREST**

14.16.1 Contractor agrees to disclose any financial or economic interest with the Project property, or any property affected by the Project, existing prior to the execution of the Agreement. Further, Contractor agrees to disclose any financial or economic interest with the Project property, or any property affected by the Project, if Contractor gains such interest during the course of this Agreement. If Contractor gains financial or economic interest in the Project during the course of this Agreement, this may be grounds for terminating this Agreement. Any decision to terminate the Agreement must be at the sole discretion of City.

14.16.2 Contractor will not engage the services on this Agreement of any present City employee who was involved as a decision maker in the selection or approval processes, or who negotiated or approved billings or Agreement Modifications for this Agreement.

14.16.3 Contractor agrees that it will not perform services on this Project for a contractor, subcontractor, or any supplier, not covered under this Agreement.

14.17 **INDEPENDENT CONTRACTOR**

Contractor is and must be an independent contractor. Any provisions in the Agreement Documents that may appear to give City the right to direct Contractor as to the details of accomplishing the Work or to exercise a measure of control over the Work means that Contractor must follow the wishes of City as the results of the Work only. These results must comply with all applicable laws and ordinances.

14.18 **NOTICE OF INJURY**

Should City or Contractor suffer injury or damage to their person or property because of any error, omission or act of the other party or of any of the other party's employees or agents or others for whose acts the other party is legally liable, claim must be made in writing to the other party within 7 Days of the first observance of such injury or damage.

14.19 **CONFIDENTIALITY**

Contractor, for the benefit of City, hereby agrees it will not release or cause or permit to be released to the public any press notices, publicity (oral or written) or advertising promotion relating to, any statement regarding, or any other public announcement or disclosure or cause or permit to be publicly announced or disclosed, in any manner whatsoever, the specific terms and conditions of this Agreement or any comment relating to the Project or the Site. Notwithstanding the foregoing, Contractor will be entitled to disclose the terms of the Agreement to the extent required by law or in the course of enforcing or defending a claim or action hereunder. Contractor must give City reasonably prompt notice of any disclosure or statement made pursuant to this provision.

14.20 DATA CONFIDENTIALITY

14.20.1 As used in the Agreement, "data" means all information, whether written or verbal, including plans, specifications, renderings, photographs, studies, investigations, audits, analyses, samples, reports, calculations, internal memos, meeting minutes, data field notes, work product, proposals, correspondence and any other similar documents or information prepared by, obtained by, or transmitted to the City in the performance of this Agreement.

14.20.2 Contractor agrees that all data, regardless of form, including originals, images, and reproductions, prepared by, obtained by, or transmitted to City in connection with the Contractor's performance of this Agreement is confidential and proprietary information belonging to City.

14.20.3 Except as specifically provided in this Agreement, Contractor or its Subcontractors must not divulge data to any third party without prior written consent of City. Contractor or its Subcontractors must not use data for any purposes except to perform Work required under this Agreement. These prohibitions will not apply to the following data provided Contractor has first given the required notice to City:

a. Data which was known to Contractor or its Subcontractors prior to its performance under this Agreement unless such data was acquired in connection with Work performed for City;

b. Data which was acquired by Contractor or its Subcontractors in its performance under this Agreement and which was disclosed to Contractor or its Subcontractors by a third party, who to the best of Contractor's or its Subcontractor's knowledge and belief, had the legal right to make such disclosure and Contractor or its Subcontractors are not otherwise required to hold such data in confidence; or

c. Data which is required to be disclosed by virtue of law, regulation, or court order, to which the Contractor or its Subcontractors are subject.

14.20.4 In the event the Contractor or its Subcontractors are required or requested to disclose data to a third party, or any other information to which the Contractor or its Subcontractors became privy as a result of any other agreement with City, the Contractor must first notify City as set forth in this Section of the request or demand for the data. The Contractor or its Subcontractors must give City sufficient facts so that City can be given an opportunity to first give its consent or take such action that City may deem appropriate to protect such data or other information from disclosure.

14.20.5 Unless prohibited by law, within 10 Days after completion of services for a third party on real or personal property owned or leased by City, the Contractor must promptly deliver, as set forth in this Section, a copy of all data to City. All data will continue to be subject to the confidentiality agreements of this Agreement.

14.20.6 Contractor or its Subcontractors assume all liability for maintaining the confidentiality of the data in its possession and agree to compensate City if any of the provisions of this Section are violated by Contractor, its employees, agents, or Subcontractors. Solely for the purposes of seeking injunctive relief, it is agreed that a breach of this Section will be deemed to cause irreparable harm that justified injunctive relief in court. Contractor agrees that the requirements of this Section will be incorporated into all subcontracts entered into by Contractor. A violation of this Section may result in immediate termination of this

Agreement without notice.

14.21 **SURVIVAL**

All warranties, representations and indemnifications by Contractor must survive the completion or termination of this Agreement.

14.22 **COVENANTS AGAINST CONTINGENT FEES**

Contractor warrants that no person has been employed or retained to solicit or secure this Agreement upon an agreement or understanding for a commission, percentage, brokerage, or contingent fee, and that no member of City Council, or any employee of City has any interest, financially, or otherwise, in the firm. For breach or violation of this warrant, City will have the right to annul the Agreement without liability or at its discretion to deduct from the Agreement Price or consideration, the full amount of such commission, percentage, brokerage, or contingent fee.

14.23 **NO WAIVER**

The failure of either party to enforce any of the provisions of the Agreement Documents or to require performance of the other party of any of the provisions hereof must not be construed to be a waiver of such provisions, nor will it affect the validity of the Agreement Documents or any part thereof, or the right of either party to thereafter enforce each and every provision.

14.24 **NONEXCLUSIVE REMEDIES**

The remedies set forth in this Agreement are cumulative and not exclusive, and failure to exercise any remedy (including, without limitation, any right to terminate) will not preclude any party from exercising any other right in seeking any other remedy available to it at law or in equity.

14.25 **PROJECT COMMUNICATIONS**

14.25.1 All communications concerning the performance of the Work or the Project will be provided to the designated Project Manager and Contractor's Representative set forth in Article 1 of the Agreement. City may change the designated Project Manager and, subject to Section 4.4.20 of these General Conditions, Contractor may change Contractor Representative, by written notice to the other.

14.25.2 Project communications may be exchanged by e-mail, but email communications cannot change the terms of the Agreement or the Scope of Work, or effectuate any change that requires a written Change Order.

14.25.3 When any provisions of the Agreement Documents requires Contractor or the Design Professional to give written notice to City, it will be deemed to have been validly given if delivered in person or if delivered at or sent by registered or certified mail, postage prepaid, to the Parties indicated in Agreement Article 1, incorporated by reference.

14.25.4 When any provisions of the Agreement Documents requires City, Project Manager, or the Design Professional to give written notice to Contractor, it will be deemed to have been validly given if delivered in person to the person designated in the Agreement Documents as Contractor's Resident Superintendent, or if delivered at or sent by registered or certified mail, postage prepaid, to Contractor at the last address in the Agreement Documents or such substitute address which Contractor designates in writing, or to the business address known to the giver of notice.

14.26 **DRUG FREE WORKPLACE PROGRAM**

14.26.1 City has adopted a policy establishing a drug free workplace for itself and as a requirement for Contractors doing business with City, to ensure the safety and health of employees working on City projects.

14.26.2 Contractor must require a drug free workplace for all employees working under the Agreement. Specifically, all employees of Contractor who are working under an agreement with City must be notified, in writing, by Contractor that they are prohibited from the manufacture, distribution, dispensation, possession or unlawful use of a controlled substance in the workplace.

14.27 Failure to require a drug free workplace in accordance with the City's policy may result in termination of the Agreement and possible debarment form bidding on future City projects.

SECTION 15 - PROVISIONS APPLICABLE SOLELY TO GMP AND COST-BASED AGREEMENTS, CHANGE ORDERS, AND JOB ORDERS

15.1 **ADDITIONAL DEFINITIONS**

The definitions set forth in Section 2 apply to GMP and Cost-Based Agreements, Change Orders, and Job Orders, together with the additional definitions set forth below.

Baseline Cost Model –
A breakdown and estimate of the scope of the Project developed by CM@Risk pursuant to Section 17.5 of these General Conditions.

CM@Risk or Construction Manager at Risk –
The person or firm selected by City to provide pre-construction and/or construction services as detailed in a Construction Manager at Risk Agreement with City. In these General Conditions, the term "Contractor" includes CM@Risk under both Pre-Construction and Construction Services Agreements.

CM@Risk Fee or Contractor's Fee –
An agreed to percentage in an accepted GMP that represents the Contractor's fee for performance of the Work.

Agreement Documents –
Where compensation under the Agreement is based upon a GMP accepted by City, the term "Agreement Documents" also includes the accepted GMP Proposal.

Agreement Price –
Where compensation under the Agreement based upon a GMP accepted by City, the term "Agreement Price" refers to the GMP.

Cost-Based Agreement, Change Order, or Job Order –
A Agreement, Change Order, or Job Order where the Agreement Price is based upon the actual cost of performing the Work, subject to the terms of the Agreement Documents, including this Section 15. These would include those generally referred to as "Cost of the Work plus a Fee with a GMP," "Time and Materials," or "Cost Plus a Fee."

Cost of the Work –
The direct costs necessarily incurred by Contractor in the proper, timely, and complete performance on the Work. The Cost of the Work will include only those costs set forth in Section 15.2 of these

General Conditions.

Deliverables –
The work products prepared by Contractor in performing the scope of work described in the Agreement. Some of the major deliverables to be prepared and provided by Contractor during pre-construction may include but are not limited to: the Baseline Cost Model and Schedule that validate City's plan and budget, Construction Management Plan, Detailed Project Schedule, Schedule of Values, alternative system evaluations, procurement strategies and plans, Detailed Cost Estimates, construction market surveys, cash flow projections, GMP Proposals, Subcontractor procurement plan, Subcontractor agreements, Subcontractor bid packages, Supplier agreements, Constructability Review, Cost Control Log, Traffic control and phasing plans and others as indicated in this Agreement or required by the Project Team.

Pre-Construction Services Agreement –
The Agreement entered into between City and the CM@Risk for Pre-Construction Services to be provided by the CM@Risk, including, without limitation, the generation of a GMP Proposal. If the GMP Proposal is accepted by City and a Construction Agreement is entered into between City and CM@Risk, the duties, obligations and warranties of the CM@Risk under the Pre-Construction Services Agreement survive and are incorporated into the resulting Construction Agreement.

Pre-Construction Services –
The services to be provided under the Pre-Construction Services Agreement, including Section 17 of these General Conditions.

Detailed Project Schedule –
The Detailed Project Schedule developed by the CM@Risk for the review and approval of the Project Manager in accordance with Section 17.3 of these General Conditions, if applicable.

General Conditions Costs –
Those costs set forth in Section 4 of Appendix 9 to these General Conditions.

GMP Plans and Specifications –
The plan and specifications upon which the Guaranteed Maximum price Proposal is based.

GMP Proposal –
The proposal of Contractor submitted pursuant to Section 17.7 of these General Conditions for the entire Work and/or portion (phases) of the Work.

Guaranteed Maximum Price or GMP –
The Guaranteed Maximum Price set forth in the Agreement, Change Order, or Job Order if applicable.

15.2 **AGREEMENT PRICE**

15.2.1 The Agreement Price for all Agreements, Change Orders, and Job Orders based upon payment of the Cost of the Work plus a Fee with a GMP, time and materials, or cost-plus a fee will be the Cost of the Work incurred plus the Fee agreed to in writing by City, limited to the amount of the GMP, if agreed to. Unless otherwise expressly provided in the Agreement, Change Order, or Job Order, all Cost Based pricing will be subject to and limited to GMP.

15.2.2 The Agreement Price may only be changed as set forth in Section 9 above.

15.2.3 Only costs specifically designated as reimbursable costs are eligible for payment by City or may be charged against the Agreement Price. All other costs will not be paid by City and will not be chargeable against the Agreement Price.

15.2.4 Cost-Based Agreements. For Agreements, Change Orders, or Job Orders, reimbursable costs must be determined pursuant to Appendix 9 to these General Conditions, Cost of the Work, and not by MAG Specifications §109.5.

15.3 **ALLOWANCES**

15.3.1 Contractor must include in the Agreement Price all Allowances stated in the Agreement Documents and agreed to in writing by City. Items covered by these Allowances must be supplied for such amounts and by such persons as City may direct, provided Contractor will not be required to employ persons against whom Contractor makes a reasonable objection. Materials, labor, and equipment under an Allowance will be selected by City in accordance with a schedule to be mutually agreed upon by City, Design Professional and Contractor or otherwise in reasonably sufficient time to avoid delay in the Work.

15.3.2 Unless otherwise provided in the Agreement Documents:

15.3.2.1 These Allowances must cover the cost to Contractor, less any applicable trade discount, of the materials, labor, and equipment required by the Allowances, delivered at the Site, and all applicable taxes;

15.3.2.2 Contractor's costs for unloading and handling on the Site, labor, installation costs, overhead, profit and other expenses relating to materials, labor, and equipment required by the Allowance must be included in the Agreement Sum and not in the Allowance; and

15.3.2.3 Whenever the cost is more or less than the Allowance, the Agreement Sum must be adjusted accordingly by Change Order, the amount of which will recognize the difference between actual costs for an Allowance item and the amount of the Allowance item and changes, if any, in handling costs on the Site, labor, installation costs, overhead, profit and other expenses.

15.4 **CONTINGENCY**

An agreed to amount in the GMP that may only be used in accordance with the terms set forth in these General Conditions and with prior written approval by the City.

15.4.1 Construction Contingency. This GMP includes a dollar amount listed as a Construction Contingency which will be readily available for increased costs for subcontractors, material, and equipment subject to prior approval of City, which approval will not be withheld unreasonably. The Construction Contingency may also be used, at the discretion of City, to reimburse CM@Risk for unexpected costs due to (a) scope gaps between trade subcontractors; (b) agreement default by trade subcontractors; (c) unforeseen field conditions, but only as defined in Section 9.5 above; (d) work completed to meet the intent of the design, but which was not indicated on the plans; (e) costs overruns not covered by allowances; (f) costs of corrective work not provided for elsewhere; and (g) implementation of any Recovery Plan. Cost for which CM@Risk desires to be paid from the Construction Contingency must be documented by CM@Risk on a time and materials basis and are subject to verification by City. If agreed to by City, a "Use of Contingency" form will be executed by both parties authorizing the actual cost of the work to be paid and included in the Work Item Direct Costs. The Construction Contingency is not allocated to any particular

item of the Project but may be used for any portion of the work as determined above. Any amount not used in the Construction Contingency will belong to City and will reduce the GMP.

15.4.2 Owner's Contingency. This GMP also includes a dollar amount listed as an Owner's Contingency which may be used only by the City (owner department) for upgrades and changes in scope or other changes not already included within the intent of the Project Program. City will provide CM@Risk with a Work Change Directive authorizing CM@Risk to perform the additional work and to transfer funds from the Owner's Contingency to the Work Item Direct Costs category to be paid with such direct costs. These additional costs will be in an amount mutually agreed upon by CM@Risk and City or will be documented by CM@Risk on a time and materials basis and are subject to verification by City. Any amount not used in the Owner's Contingency will belong to the City and will reduce the GMP.

15.5 **REDUCTION IN RETENTION**

If the Agreement Price is based upon a GMP, in order to receive payment of one-half of the retention as set forth in Section 8.1.5 above, Contractor must also submit to the Project Manager a complete accounting of the Actual Reimbursable Cost of the Work to date, including all such documentation (including, without limitation, invoices, subcontract, subcontractor change orders, purchase orders, records of payment, etc.) as City may require, to establish whether the payments made to Contractor equal, exceed, or are less than the actual reimbursable Cost of the Work to date. Any excess payments by City, as determined by the Project Manager, will be deducted from the one-half retention payment to be made to Contractor, and any additional excess amounts paid to Contractor will be refunded by Contractor to City. The Project Manager's determinations as to Actual Reimbursable Cost of the Work will be the basis of payment until final Project Closeout and Final Payment under the Agreement.

15.6 **FINAL PAYMENT**

If the Agreement Price is based upon a GMP, as a further condition precedent to Final Payment by City, Contractor must submit to the Project Manager a complete final accounting of the Actual Reimbursable Cost of the Work, including all such documentation (including, without limitation, invoices, subcontracts, subcontractor change orders, purchase orders, records of payment, etc.) as City may require, to establish whether the payments made to Contractor equal, exceed, or are less than the Actual Reimbursable Cost of the Work to date. Any excess payments by City, as determined by the Project Manager, will be deducted from the one-half retention payment to be made to Contractor, and any additional excess amounts paid to Contractor will be refunded by Contractor to City. Disputes relating to the Final Cost of the Work will be subject to City's audit rights under Sections 8.8 above and 15.7 below, and the dispute resolution process under Section 13 above.

15.7 **OPEN BOOK**

On any GMP-based or Cost-Based Agreement, Job Order, or Change Order, City may attend any and all meetings or discussions pertaining to the Project, including bid openings, and must have access to all books, invoices, accounts, memoranda, correspondence, and written communications or records of any kind pertaining to the Project, including without limitation, those stored in electronic format.

15.8 **DIFFERING SITE CONDITIONS AND/OR CHANGE IN LAWS**

A Change Order for increased costs under Section 9.5 or 9.6 above will only be considered

or granted by City to the extent such actual, documented costs are justified.

SECTION 16 - PROVISIONS APPLICABLE SOLELY TO JOB ORDER AGREEMENTS (JOC)

16.1 **ADDITIONAL DEFINITIONS**

The definitions set forth in Sections 2 and below will apply to all Job Order Agreements and Job Orders. In addition, the definitions set forth in Section 15.1 above will apply to all Cost-Based Job Orders.

Agreement –
Includes the Job Order Master Agreement and Job Order Project Agreements issued and agreed to by City and JOC Contractor.

JOC Contractor's Coefficient –
A numerical factor that represents JOC Contractor total costs (indirect and direct costs, sales tax, profit, etc.) and other adjustments for market conditions.

Job Order Request for Proposal (RFP) –
The Request for Proposals issued by City for each Job Order Project Agreement relating to a specific Project.

Job Order Cost Proposal –
The Proposal submitted by JOC Contractor in response to a Job Order Request for Proposal (RFP) issued by City to develop a Job Order Project Agreement for a specific Project.

Guaranteed Maximum Price (GMP) Job Order –
Job Order under which JOC Contractor is compensated for actual costs incurred.

Job Order Project Agreement (Job Order) –
The agreement for a specific project, as it may be modified by all Change Orders, executed by the Parties, which incorporates the terms and conditions of the Job Order Master Agreement.

16.2 **ORDERING AND PROCESSING PROCEDURES FOR JOB ORDERS**

16.2.1 The process for developing and issuing a Job Order for a particular Project consists of three (3) procedures: (1) issuance of a RFP by City; (2) JOC Contractor's response to the RFP in the form of JOC Contractor's Job Order Cost Proposal; and (3) Issuance of a Job Order by City, as set for below.

16.2.2 RFP's For Job Orders

16.2.2.1 City will provide to JOC Contractor RFP with a Scope of Work (SOW) describing the Work to be performed, which may include special instructions and conditions, material submittal requirements, and, if applicable, a complete set of sketches, construction drawings and specifications for the Job Order.

16.2.2.2 Some Job Order RFP's will be issued by City without detailed sketches, drawing and specifications and will rely on JOC Contractor to produce them for City review and approval and is considered to be Pre-Construction and incidental design services included in JOC Contractor's overhead for GMP Job Orders. In addition JOC Contractor will not be reimbursed for any Pre-Job Order costs, including proposal preparation, attendance during negotiations, or site visits.

16.2.3 JOC Contractor's Job Order Cost Proposal

16.2.3.1 JOC Contractor must respond within ten (10) calendar days of the RFP date or site visit, whichever is later or as otherwise indicated on a case-by-case basis, by submitting JOC Contractor's Job Order Cost Proposal to the City representative.

16.2.3.2 Unless otherwise required under the terms of the RFP, JOC Contractor's Job Order Cost Proposal must include the following.

a. JOC Contractor's Job Order Cost Proposal in PDF and electronic format;

b. A Project Schedule and schedule of values that reflects the costs of each work element on the schedule. The schedule must show all milestones (e.g., permits, submittals, ordering materials, demolition, work phases, closeout and completion date); and

c. Necessary documentation will be required to indicate that adequate scoping, layout, setup and planning to accomplish the Work has been done. Examples of documentation that might reasonably be expected include sketches, drawings, calculations, catalog cuts and specifications produced to a level of detail and skill that could be expected of experienced, competent Project Managers with five or more periods experience in their respective trade.

16.2.3.3 JOC Contractor must select Subcontractors based on qualifications alone or on a combination of qualifications and price and must not select Subcontractors based on price alone. A qualifications and price selection may be a one-step selection based on a combination of qualifications and price or two-step selection. In a two-step selection, the first step must be based on qualifications alone and the second step may be based or a combination of qualifications and price or on price alone.

16.2.3.4 Upon request, JOC Contractor must provide City with copies of Subcontractor quotes and the basis for selection of each Subcontractor.

16.2.3.5 If City objects to a selected Subcontractor, City will make the objection and the reasons for the objection known to the JOC Contractor. JOC Contractor must then present an acceptable Subcontractor for the applicable discipline. City will not unreasonably object to or withhold approval of a Subcontractor.

16.2.3.6 For self-performed work, the City retains the right to have the JOC Contractor establish JOC Contractor's costs by bidding their costs against at least three (3) other interested trade Contractors. No self- performed work will be allowed to be performed on a lump sum basis.

16.2.4 Issuance of Job Order

16.2.4.1 City Representative will compare the JOC Contractor's Job Order Cost Proposal with the City's estimate, schedules and other requirements, and then, if the City Representative determines it is in the best interest of City, arrange a meeting with JOC Contractor, at which time the JOC Contractor's Job Order Cost Proposal will be discussed and negotiated.

16.2.4.2 If the City Representative determines that it is in the best interest of the City, City will then issue a Job Order to JOC Contractor for execution.

16.2.4.3 Specific Job Orders may vary, but unless agreed to by City in writing otherwise, the content

of Job Orders under the Agreement will generally be as follow, all of which will be signed and/or initialed by JOC Contractor's designated representative:

a. The description of the Scope of the Work and Project Schedule (attached as Exhibit A to the Job Order);

b. The address or location of the Work;

c. The Agreement Price for Work (Construction) included in the Project (attached as Exhibit B to the Job Order);

d. The name of the JOC Contractor representative for the Project;

e. The Drawings and Specifications for the Project;

f. If any shop drawings, project date and/or samples are required for the Job Order, the date for delivery of each required item (included in the Project Schedule, Exhibit A to the Job order); and

g. Project Specific Provisions, if any, in Exhibit A to the Job Order, including, without limitation, whether any of the following are required: Pre-Construction Conference, weekly progress meetings, field office, storage enclosure, materials and equipment handling facility, submittals, shop drawings, product data, equipment list, samples, project manual, schedule of values, Construction progress schedule, narrative reports, progress report, progress charts, progress photographs, materials status report, Construction diagram, Construction status report, operation and maintenance data, operating maintenance instructions and parts list, and as-build drawings.

16.2.5 Job Order Intent. Each Job Order will be interpreted to include all items reasonably necessary to complete the Project under that Job Order as described in the scope of the Work in that Job Order. All Work must be performed in a professional manner and all materials used must be new and of the highest quality and of the type best adapted to their purpose, unless otherwise specified. The Notice to Proceed date, and the award date established therein, will be deemed an integral part of the Job Order the same as if set forth therein.

16.3 **INCIDENTAL DESIGN SERVICES**

16.3.1 This effort includes all "extensions of design" for systems that are typically specified in a performance oriented manner by consultants and designers. Examples include: fire sprinkler systems, fire alarm and sprinkler systems, DDC controls, control systems, prefabricated metal building and similar situations. These designs are normally provided under submittals as a shop drawing with engineering backup and as appropriate, seals of registered engineers specializing in the particular system.

16.3.2 Incidental design includes all documents, sketches, schematic diagrams, floor plan layouts, equipment schedules and other documents produced by the JOC Contractor to define the work required for projects that the City does not develop formal or abbreviated designs requiring a seal by a registered engineer. Incidental design does not include preparation of designs requiring an architect or engineer seal.

16.3.3 JOC Contractor represents, covenants, and agrees, and contractually assumes the obligation to furnish, all of the required Design Services through properly licensed and

experienced Design Professionals in complete accordance with all of the duties imposed on a Design Professional under the Agreement Documents, Laws, Regulations, or Legal Requirements, and the common law.

16.3.4 All Design Documents (and all other Project-related documents, models, computer drawings and other electronic expression, photographs and other expressions CADD, and BIM files and images included) that JOC Contractor and/or JOC Contractor's Design Professional(s) prepare in connection with a Job Order and the copyrights therein (collectively, the "Instruments of Service") will be the property of City. JOC Contractor covenants and agrees to execute any additional document reasonably requested by City to confirm such assignment without any additional compensation.

16.4 **CONSTRUCTION SERVICES**

16.4.1 The following subsections of this Section 16.4 set forth requirements beyond those set forth in Section 4 above which apply to Construction Services performed under a Job Order.

16.4.2 JOC Contractor must perform the Work using only those firms, team members and individuals designated by JOC Contractor consistent with each Job Order or otherwise approved by City pursuant to the General Conditions. No other entities or individuals may be used without the prior written approval of the Project Manager.

16.4.3 Construction Phasing

16.4.3.1 City use of the facilities is anticipated while the Work is being performed. The Work must be planned and accomplished so that there will be a minimum of interference and inconvenience to occupants in the building and agencies in the vicinity and to other craftsmen who may have to do work in the affected facilities. Any blockage of building exits or driveways must be coordinated in advance.

16.4.3.2 If applicable, furniture, portable office equipment and wall appurtenances not rigidly fastened to the walls must be moved by JOC Contractor, protected from damage and replaced to the original position upon completion of the work. If the work required by the Job Order will not allow furniture and portable office equipment to be replaced to its original position, new locations will be designated by City. Incidental costs associated with moving one-piece furnishings up to approximately 150 pounds to perform such tasks as painting, carpet or tile replacement, etc., are considered a general cost of building renovation and must be included in the JOC Contractor's Coefficient. Costs for large scale or wholesale removal and replacement of large quantities of desks or modular workstations, copiers, multiple full file cabinets, etc. to another location or storage outside the work space, or disassembly and reassembly of modular furniture is not considered part of the JOC Contractor's Coefficient and will be priced separately.

16.4.3.3 The work must, so far as practicable, be done in definite sections or divisions and confined to limited areas which must be completed before work in other sections or divisions are begun.

16.4.4 Work Site Conflicts. In the event of a conflict between JOC Contractor and others in an occupied facility or where other Contractors are performing work on the same facility under other Agreements, City will decide to dispute and that decision will be final.

16.4.5 Ownership of Work Product. Work Product prepared or otherwise created in connection

with the performance of this Agreement, including the Work, are to be and remain the property of City. For purposes of this provision, "Work Product" will include all designs, drawings, plans, specifications, ideas, renderings and other information or matter, in whatever form created (e.g., electronic or printed) and in all media now known or hereinafter created. All Work Product will be considered Work Made for Hire as defined in the United States Copyright Act 17 U.S.C. §101 (Copyright Act). If for any reason any such Work is found not to be a work for hire, JOC Contractor hereby transfers and assigns ownership of the copyright in such Work to City. The rights in this Section are exclusive to City in perpetuity.

16.5 **OPTIONAL LIQUIDATED DAMAGES**

16.5.1 Specific Job Orders. City will have the right to assess liquidated damages in relation to any specific JOC Project Agreement as set forth below.

16.5.2 Substantial Completion Liquidated Damages. JOC Contractor acknowledges and agrees that if JOC Contractor fails to obtain Substantial Completion of the Work within the Agreement Time, City will sustain extensive damages and serious loss as a result of such failure. The exact amount of such damages will be extremely difficult to ascertain. Therefore, City and JOC Contractor agree that if JOC Contractor fails to achieve Substantial Completion of the Work within the Agreement Time, City will be entitled to retain or recover from JOC Contractor, as liquidated damages and not as a penalty, the sum per calendar day as indicated in MAG § 108.9.

16.5.3 Final Acceptance Liquidated Damages. For the same reasons set forth in Section 16.5.2 above, City and JOC Contractor further agree that if JOC Contractor fails to achieve Final Acceptance of the Work within the Agreement Time, City will be entitled to retain or recover from JOC Contractor, as liquidated damages and not as a penalty, the sum per calendar day as indicated in MAG § 108.9 commencing from the actual date of Substantial Completion or Final Acceptance as required under any specific JOC Project Agreement.

16.5.4 MAG Liquidated Damages. Liquidated damages provisions in MAG § 108.9 may apply to any specific JOC Project Agreement.

16.5.5 City may deduct liquidated damages assessed pursuant to this Section 16.5 from any unpaid amounts then or thereafter due JOC Contractor under the Agreement or any specific JOC Project Agreement between JOC Contractor and City. Any liquidated damages not so deducted from any unpaid amounts due JOC Contractor must be payable to City at the demand of City, together with interest from the date of the demand at the highest lawful rate of interest payable to JOC Contractor.

16.6 **PERFORMANCE MEASUREMENT**

16.6.1 Performance Assessment. After the Final Acceptance of Work under each Job Order, City will complete a written evaluation of the performance of JOC Contractor on the Job Order.

16.6.2 Consideration in Assignment of Work. JOC Contractor's record of cost, schedule and quality performance and comparative assessments will be significant considerations in City's determination whether to award future Job Orders. JOC Contractor agrees that any determination by City not to not award future Job Orders or Option periods based on performance will be at the sole discretion of City.

SECTION 17 - PROVISIONS APPLICABLE SOLELY TO PRE-CONSTRUCTION SERVICES FOR CONSTRUCTION MANAGER AT RISK

17.1 ADDITIONAL DEFINITIONS

The definitions set forth in Section 2 and 15.1 above will apply to all Pre-Construction Services Agreements.

17.2 GENERAL

17.2.1 CM@Risk must perform the Services required by, and in accordance with the Agreement Documents and as outlined in Exhibit A of the Agreement to the satisfaction of the Project Manager, exercising the degree of care, skill, diligence and judgment a professional construction manager experienced in the performance of such services for construction and/or facilities of similar scope, function, size, quality, complexity and detail to the Project in urban areas throughout the United States, would exercise at such time, under similar conditions. CM@Risk must, at all times, perform the required services consistent with sound and generally accepted engineering principles and construction management and construction contracting practices.

17.2.2 As a participating member of the Project Team, CM@Risk must provide to City and Design Professional a written evaluation of City's Project Program and budget, each in terms of the other, with recommendations as to the appropriateness of each. CM@Risk must prepare a Baseline Cost Model that validates City's budget. The Baseline Cost Model must include all assumptions and basis of estimates in enough detail so that the Project Team can compare future detail estimates to the Baseline Cost model for variances. City and Design Professional will provide all the reasonably required data that is available in order to reach agreement between the team members that the Baseline Cost Model is an accurate projection of the costs of the Project.

17.2.3 CM@Risk must attend Project Team meetings, which may include, but are not limited to, bi- weekly Project management meetings, Project workshops, special Project meetings, construction document rolling reviews, public meetings and partnering sessions. CM@Risk attendance at design or other meetings in which CM@Risk is provided the opportunity but does not actively participate and/or is not properly prepared is not acceptable. Repeated instances of non-participation and/or lack of preparedness will be grounds for termination of CM@Risk Agreement for default.

17.2.4 CM@Risk must provide Pre-Construction Services, described herein, in a timely manner and consistent with the intent of the most current Drawings and Specifications. CM@Risk must promptly notify City in writing whenever CM@Risk determines any Drawings or Specifications are inappropriate for the Project and/or cause changes in the scope of Work that deviates more than the allowed contingencies within the Baseline Cost Model or requires an adjustment in the Baseline Cost Model, Detailed Cost Estimate, Detailed Project Schedule, GMP Proposals and/or in the Agreement Time for the Work, to the extent such as established.

17.2.5 CM@Risk when requested by City, must attend, make presentations and participate as may be appropriate in public agency and or community meetings, relevant to the Project. CM@Risk must provide drawings, schedule diagrams, budget charges and other materials describing the Project when their use is required or appropriate in any such public agency meetings.

17.2.6 Ownership of Work Product. All Work Product prepared or otherwise created in connection with the performance of this Agreement, including the Work, are to be and remain the property of City. For purposes of this provision, "Work Product" will include all designs, drawings, plans, specifications, ideas, renderings and other information or material, in whatever form created (e.g., electronic or printed) and in all media now know or hereinafter created. All Work Product will be considered Work Made for Hire as defined in the United States Copyright Act 17 U.S.C.
§101 (Copyright Act). If for any reason any such Work is found not to be a work for hire, Contractor hereby transfers and assigns ownership of the copyright in such Work to City. The rights in this Section are exclusive to City in perpetuity.

17.2.7 CM@Risk represents to City in completing Pre-Construction Services and providing the reports and analysis required thereunder, that Work can be properly and timely constructed within the GMP Proposal, if accepted. CM@Risk does not assume any design responsibilities unless specifically called for in the scope of work, but CM@Risk will be responsible for their errors, omissions or inconsistencies included in the Work.

17.3 **DETAILED PROJECT SCHEDULE**

17.3.1 The fundamental purpose of the Detailed Project Schedule is to identify, coordinate and record the tasks and activities to be performed by all of the Project Team members and then for the Project Team to utilize that Deliverable as a basis for managing and monitoring all member's compliance with the schedule requirements of the Project. Each Project Team member is responsible for its compliance with the Detailed Project Schedule requirements. CM@Risk must, however, develop and maintain the Detailed Project Schedule on behalf of and to be used by the Project Team based on input from the other Project Team members. The Baseline Project Schedule must be developed as part of the Baseline Cost Model. The Detailed Project Schedule must use the Critical Path method ("CPM") technique, unless required otherwise, in writing by City. CM@Risk must use scheduling software acceptable to City to develop the Detailed Project Schedule. The Detailed Project Schedule must be presented in graphical and tabular reports as agreed upon by the Project Team. If Project phasing as described below is required, the Detailed Project Schedule must indicate milestone dates for the phases once determined. As part of construction phase, City may require CM@Risk to prepare a "resource loaded" schedule for all work, including work performed by Subcontractors, detailing each of the project tasks and the required/anticipated number of personnel per day for each task. CM@Risk must also indicate on the schedule its ability to meet said required/anticipated personnel requirements.

17.3.2 CM@Risk must include and integrate in the Detailed Project Schedule the services and activities required of City, Design Professional and CM@Risk including all construction phase activities based on the input received from City and the Design Professional. The Detailed Project Schedule must define activities as determined by City to the extent required to show: (a) the coordination between preliminary design and various pre-construction documents, (b) any separate long-lead procurements, (c) any permitting issues, (d) any land, right-of-way, or easement acquisition, (e) bid packaging strategy and awards to Subcontractors and Suppliers, (f) major stages of construction, (g) start-up and commissioning, and (h) occupancy of the completed Work by City. The Detailed Project Schedule must include by example and not limitation, proposed activity sequences and durations for design, procurement, construction and testing activities, milestone dates for actions and decisions by the Project Team, preparation and processing of shop drawings

and samples, delivery of materials or equipment requiring long-lead time procurement (if any), milestone dates for various construction phases, Total Float for all activities to the extent authorized by City, relationships between the activities, City's occupancy requirements showing portions of the Project having occupancy priority, and proposed dates for Final Acceptance.

17.3.3 A Baseline Project Schedule must be initiated with the project Baseline Cost Model and agreed to by the project team at the same time. CM@Risk must update and maintain a detailed Project Schedule throughout pre-construction such that it will not require major changes at the start of the construction phase to incorporate CM@Risk's plan for the performance of the construction phase Work. CM@Risk must provide updates and/or revisions to the Detailed Project Schedule for use by the Project Team, whenever required, but no less often than at the Project Team meetings. CM@Risk must include with such submittals a narrative describing its analysis of the progress achieved to-date vs. the Baseline Project Schedule, including any concerns regarding delays or potential delays, and any recommendations regarding mitigating actions.

17.3.4 If phased construction is deemed appropriate at the time of developing the Baseline Cost Model or during the development of the Detailed Project Schedule, and City approves, CM@Risk must review the design and make recommendations regarding the phased issuance of Construction Documents to facilitate phased construction of the Work, with the objective of reducing the Project Schedule and/or Cost of the Work. CM@Risk must take into consideration such factors as natural and practical lines of work severability, sequencing effectiveness, access and availability constraints, total time for completion, construction market conditions, labor and materials availability, and any other factors pertinent to saving time and cost.

17.3.5 Long Lead Time Items. As part of developing the Detailed Project Schedule, CM@Risk must identify all long lead time materials, fabrications, equipment, or other items which may impact the Project Schedule and may require early action on the part of the Project Team. Dates for selecting and ordering long lead time items will be included and highlighted in the Detailed Project Schedule

17.3.6 Equipment Plan. Contractor must develop an Equipment Plan that addresses all rental and owned equipment, regardless of whether such equipment will be provided by CM@Risk or subcontractor(s), that will be necessary to construct the Project and the cost of which will be included as a Cost of the Work in the GMP Proposal. The Equipment Plan will seek to minimize the cost of the equipment to City and maximize the efficient and coordinated use of the equipment for completion of the Project. The Equipment Plan will not only include the costs and allowable lease rates for the equipment, but will also include an equipment schedule that will be incorporated into the Detailed Project Schedule and the Schedule of Values submitted with the GMP Proposal.

17.4 DESIGN DOCUMENT REVIEWS

17.4.1 CM@Risk must evaluate periodically the availability of labor, materials/equipment, cost-sensitive aspects of the design; and other factors that may create an unacceptable variance to the Baseline Cost Model and/or Baseline Project Schedule.

17.4.2 CM@Risk must recommend, in conjunction with the Project Team, those additional surface and subsurface investigations that, in its professional opinion, are required to provide the necessary information for CM@Risk to construct the Project. These additional

investigations, if agreed to be necessary by the Project Manager and the Design Professional, will be acquired by City and copies of the reports will be provided to CM@Risk.

17.4.3 CM@Risk must meet with the Project Team as required to review designs during their development. CM@Risk must familiarize itself with the evolving documents through pre- construction. CM@Risk must proactively advise the Project Team and make recommendations on factors related to construction costs, and concerns pertaining to the feasibility and practicality of any proposed means and methods, selected materials, equipment and building systems, and, labor and material availability. CM@Risk must furthermore advise the Project Team on proposed site improvements, excavation and foundation considerations, as well as, concerns that exist with respect to coordination of the Drawings and Specifications. CM@Risk must use established value analysis principles in recommending cost effective alternatives.

17.4.4 CM@Risk must routinely conduct constructability and bid-ability reviews of the Drawings and Specifications as necessary to satisfy the needs of the Project Team. The reviews must attempt to identify all discrepancies and inconsistencies in the Construction Documents especially those related to clarity, consistency, completeness and coordination of Work of Subcontractors and Suppliers.

17.4.4.1 CM@Risk must evaluate whether: (a) the Drawings and Specifications are configured to enable efficient construction; (b) design elements are standardized; (c) construction efficiency is properly considered in the Drawings and Specifications; (d) module/preassembly design is prepared to facilitate fabrication, transport and installation; (e) sequences of Work required by or inferable from the Drawings and Specifications are practicable; (f) the design has taken into consideration efficiency issues concerning access and entrance to the site, laydown and storage of materials, staging of site facilities, construction parking, and other similar pertinent issues; and (g) the design maintains continued operation of the existing City systems and maintains traffic on adjacent roadways. CM@Risk must also review the Drawings and Specifications to ensure that what is depicted therein can be constructed as designed and must promptly inform the Project Team of any issues.

17.4.4.2 CM@Risk must check cross-reference and complementary Drawings and sections within the Specifications and in general evaluate whether: (a) the Drawings and Specifications are sufficiently clear and detailed to minimize ambiguity and to reduce scope interpretation discrepancies; (b) named materials and equipment are commercially available and are performing well, or otherwise, in similar installations; (c) Specifications include alternatives in the event a requirement cannot be met in the field; and (d) in its professional opinion, the Project is likely to be subject to Differing Site Conditions.

17.4.4.3 The results of the reviews must be provided to Project Team in formal, written reports clearly identifying all reviewed documents and the discovered discrepancies and inconsistencies in the Drawings and Specifications with notations and recommendations made on the Drawings, Specifications and other documents. CM@Risk must meet with Project Team to discuss any findings and review reports.

17.4.4.4 CM@Risk's reviews must be from a Contractor's perspective, and though it will serve to eliminate/reduce the number of RFIs) and changes during the construction phase, responsibility for the Drawings and Specifications will remain with the Design Professional and not CM@Risk.

17.4.5 It is CM@Risk's responsibility to assist the Design Professional in ascertaining that, in CM@Risk's professional opinion, the Construction Documents are in accordance with applicable Laws, Regulations, or Legal Requirements, building codes, sound engineering principle's rules and regulations. If CM@Risk recognizes that portions of the Construction Documents are at variance with applicable laws, statutes, ordinances, building codes, sound engineering principle's rules and regulations, it must promptly notify the Project Team in writing, describing the apparent variance of deficiency. However, the Design Professional is ultimately responsible for the compliance of the Drawings and Specifications with those laws, statutes, ordinances, building codes, rules and regulations.

17.4.6 The Project Team will routinely identify and evaluate using value analysis principles and alternate systems, approaches, design changes that have the potential to reduce Project costs while still delivering a high quality and fully functional Project consistent with the Project Program. If the Project Team agrees, CM@Risk in cooperation with the Design Professional, will perform a cost/benefit analysis of the alternatives and submit such in writing to the Project Team. City, through the Project Manager, will direct which alternatives will be incorporated into the Project. The Design Professional will have full design responsibility for the review and incorporation of CM@Risk suggested alternatives into the Drawings and Specifications. CM@Risk must analyze the costs and schedule impacts of the alternatives against the Baseline Cost Model and Schedule and provide a recommendation for the Project Team's consideration and City's approval prior to the establishment of the GMP.

17.5 **BASELINE COSTS MODEL, DETAILED COST ESTIMATES, AND SCHEDULE OF VALUES**

17.5.1 At the conclusion of the Master Planning and Programming, if required, CM@Risk will review all available information regarding the design and scope of the Project using CM@Risk's experience in performing similar work, knowledge of similar projects and current and projected construction costs and, based upon that review, must develop a Baseline Cost Model for review by the Project Team and approval by City. Once approved by City, the Baseline Cost Model will be continually referenced as detailed estimates are created as the design progresses throughout Pre-Construction until the final GMP for the entire Project is established. A final GMP for the entire Project must be established and approved by City prior to the start of construction. It is the responsibility of CM@Risk to ensure City has sufficient information to evaluate and approve a final GMP prior to the time necessary to start construction so construction can be completed within the Agreement Time. The Project Detailed Cost Estimate will be the best representation from CM@Risk of what the complete functional Project's construction costs will be as indicated by the most current available documents and will be constantly checked against the Baseline Cost Model. CM@Risk must communicate to the Project Team and assumptions made in preparing the Baseline Cost Model. The Baseline Cost Model must support CM@Risk's Detailed Cost Estimates and may be broken down initially as dictated by the available information, as required by City.

17.5.2 After receipt of the Design Professional's most current documents from certain specified pre- construction milestones, CM@Risk must provide a draft Detailed Cost Estimate including a detailed written report detailing any variances to the Baseline Cost Model and Baseline Project Schedule. The Design Professional and CM@Risk will reconcile any disagreements on the estimate to arrive at an agreed upon Detailed Cost Estimate for the construction costs based on the scope of the Project through that specified pre-construction milestone. Pre-Construction milestones applicable to this paragraph are:

Master Planning and Programming, Schematic Design, 50% Design Development, 100% Design Development, and 50% Construction Drawings, If no consensus is reached, City will make the final determination. If the Project Team requires additional updates of the Detailed Cost Estimate beyond that specified in this paragraph, CM@Risk must provide the requested information in a timely manner.

17.5.3 If at any point the Detailed Cost Estimate submitted to City exceeds the previously accepted Baseline Cost Model or previously approved Detailed Cost Estimate agreed to as set forth in Section 17.5.2 above, CM@Risk must make appropriate recommendations to project Team on means/methods, materials, and or other design elements that it believes will reduce the estimated construction costs, such that it is equal to or less than the established Project Team's Baseline Cost Model.

17.5.4 Unless other levels of completion are agreed to in writing in the Construction Documents, at 50% Construction Drawings and included with the associated report, CM@Risk must also submit to the Project Team for review and approval a Schedule of Values that complies with the following requirements. The Schedule of Values must be based on City standard bid schedule and highlight significant variances from any previously submitted Schedule of Values. The Schedule of Values must be directly related to the breakdowns reflected in the Detailed Project Schedule and CM@Risk's Detailed Cost Estimate. In addition, the Schedule of Values must: (a) detail unit prices and quantity take-offs, (b) detail all other contingencies and unit price Work shown and specified in the detailed design documents.

17.5.5 CM@Risk is to track, estimate/price and address the Project Team's overall project cost issues that arise outside of the Baseline Cost Model and the latest approved Detailed Cost Estimate such as: City generated changes, Project Team proposed changes, alternate system analysis, constructability items and value engineering analysis. The system used to implement this process will be referred to as the Design Evolution Log. This is to be addressed between the Baseline Cost Model and the Master Planning and Programming Detailed Cost Estimate, and then (unless other levels of completion are agreed to in writing in the Construction Documents) between the Detailed Cost Estimates for each of the pre-construction milestones thereafter, Schematic Design, 50% Design Development, 100% Design Development, and 50% Construction Documents, and the bid packages for all Phases.

17.5.6 Upon request by City, CM@Risk must submit to City a cash flow projection for the Project based on the current updated/revised Detailed Project Schedule and the anticipated level of payments for CM@Risk during the design and construction phases. In addition, if requested by City and based on information provided by City, CM@Risk must prepare a cash flow projection for the entire Project based on historical records for similar types of projects to assist City in the financing process.

17.5.7 Construction Water. CM@Risk must estimate the quantity of water to be used and include the cost thereof in each Detailed Cost Estimate and GMP Proposal provided by City.

17.6 **SUBCONTRACTOR AND MAJOR SUPPLIER SELECTIONS**

17.6.1 There are two ways to select Subcontractors and major Suppliers prior to submission of a GMP Proposal: (1) qualifications-based selection; or (2) a combination of qualifications and price. Except as noted below, the selection of Subcontractors/Suppliers is the sole responsibility of CM@Risk. In any case, CM@Risk is solely responsible for the performance of the selected Subcontractors/Suppliers, and for compliance with the requirements of

Title 34 of the Arizona Revised Statutes in the selection of a Subcontractors/Suppliers, to the extent applicable. CM@Risk must comply with its Subcontractor Selection Plan submitted with its Statement of Qualifications.

17.6.2 City may approve the selection of a Subcontractor(s) or Suppliers(s) based only on their qualifications when CM@Risk can demonstrate it is in the best interest of the Project. All Work that is performed, after such a qualifications-based selection, for a price that is negotiated by CM@Risk will be billed in accordance with the GMP for actual costs and may be subject to audit by City.

17.6.2.1 Qualifications based selection of a Subcontractor(s)/Supplier(s) should only occur prior to the submittal of the GMP Proposal.

17.6.2.2 If a Subcontractor/Supplier selection plan was submitted and agreed to by City, CM@Risk must apply the plan in the evaluation of the qualifications of a Subcontractor(s) or Supplier(s) and provide City with its review and recommendations.

17.6.2.3 CM@Risk must receive written City approval for each selected Subcontractor(s) and Supplier(s).

17.6.2.4 CM@Risk must negotiate costs for services/supplies from each Subcontractor/Supplier selected under this method.

17.6.3 All Work must be competitively bid unless a Subcontractor or Supplier was selected pursuant to Section 17.6.2 above.

17.6.3.1 CM@Risk must develop Subcontractor and Supplier interest, submit the names of a minimum of three qualified Subcontractors or Suppliers for each trade in the Project for approval by City and solicit bids for the various Work categories. If there are not three qualified Subcontractors/Suppliers available for a specific trade or there are extenuating circumstances warranting such, CM@Risk may request approval by City to submit less than three names. Without prior written notice to City, no change in the recommended Subcontractors/Supplies will be allowed.

17.6.3.2 If City objects to any nominated Subcontractor/Supplier or to any self-performed Work for good reason, CM@Risk must nominate a substitute Subcontractor/Supplier that is acceptable to City.

17.6.3.3 CM@Risk must distribute Drawings and Specifications, and when appropriate, conduct a Pre- Bid Conference with prospective Subcontractors and Suppliers.

17.6.3.4 If CM@Risk desires to self-perform certain portions of the Work, it must request to be one of the approved Subcontractor bidders for those specific bid packages. CM@Risk's bid will be evaluated in accordance with the process identified below. If events warrant and City concurs that it is necessary in order to ensure compliance with the Project Schedule and/or the most recent Detailed Cost Estimate, CM@Risk may be authorized to self-perform Work without bidding or rebidding the Work. When CM@Risk self-performs work without bidding, only the actual costs associated with performing the Work in accordance with the approved GMP will be billed and may be subject to audit by City.

17.6.3.5 CM@Risk must receive, open, record and evaluate the bids; provided, however, that if CM@Risk or one of its affiliates is bidding to self-perform the Work that is the subject of the bid, then the bids must be received, opened, recorded and evaluated by Project Manager

instead of CM@Risk. Bids for each category of Work must be opened and recorded at a pre-determined time. The apparent low bidders must be interviewed to determine the responsiveness of their proposals. In evaluating the responsiveness of bid proposals CM@Risk, in addition to bid price, may consider the following factors: past performance on similar projects, qualifications and experience of personnel assigned, quality management plan, approach or understanding of the Work to be performed, and performance schedule to complete the Work. The final evaluation of Subcontractor/Supplier bids must be done with Project Manager in attendance to observe and witness the process. CM@Risk must resolve any Subcontractor/Supplier bid withdrawal, protest or disqualification in connection with the award at no increase in the Cost of Work.

17.6.4 CM@Risk will be required to prepare two different reports on the subcontracting process.

17.6.4.1 Within fifteen days after each major Subcontractor/Supplier bid opening process; CM@Risk must prepare a report for City's review and approval identifying the recommended Subcontractors/Supplier for each category of Work. The report must detail: (a) the name of the recommended Subcontractor/Supplier and the amount of the Subcontractor/Supplier bid for each sub-agreement; (b) the sum of all recommended Subcontractor/Supplier bids received; (c) and trade work and its cost that CM@Risk intends to self-perform, if any.

17.6.4.2 Upon completion of the Subcontractor/Supplier bidding process, CM@Risk must submit a summary report to City of the entire Subcontractor/Supplier selection process. The report must indicate, by bid process, all Subcontractors/Suppliers contacted to determine interest, the Subcontractors/Suppliers solicited, the bids received and costs negotiated, and the recommended Subcontractors/Suppliers for each category of Work.

17.6.5 The approved Subcontractors/Suppliers will provide a Schedule of Values with their bid proposals, which will be used to create the overall Project Schedule of Values.

17.6.6 If after receipt of sub-bids or after award to Subcontractors and Suppliers, City objects to any nominated Subcontractor/Supplier or to any self-performed Work without any reasonable basis, CM@Risk must nominate a substitute Subcontractor or Supplier, preferably if such option is still available, from those who submitted Subcontractor bids for the Work affected. Once such substitute Subcontractors and Suppliers are consented to by City, CM@Risk's proposed GMP for the Work or portion thereof must be correspondingly adjusted to reflect any higher or lower costs form any such substitution.

17.7 **GMP PROPOSAL**

17.7.1 When a GMP Proposal is submitted for a phase of the Work, the GMP will have a Detailed Cost Estimate of the Costs of the Work (as set forth in Section 15.2) in each phase of the Work that is being proposed plus the current estimate for all other Work. City will not approve the GMP for the phase of work without a total estimate for the complete Project. City may request a GMP Proposal for all or any portion of the Project and at any time during pre-construction. Any GMP Proposals submitted by CM@Risk must be based on and consistent with Baseline Cost Model and the current update/revised Detailed Cost Estimate at the time of the request and include any clarifications or assumptions upon which the GMP Proposal(s) are based.

17.7.2 A GMP Proposal for the entire Project will be the sum of the Cost of the Work, CM@Risk Fee, and General Conditions Cost. CM@Risk guarantees to complete the Project at or less than

the final GMP Proposal amount plus approved Change Orders. CM@Risk will be responsible for any costs for expenses that would cause the Cost of the Work actually incurred, including the Construction Fee and General Conditions Costs, to exceed the GMP.

17.7.3 CM@Risk must prepare its GMP Proposal in accordance with City's request for GMP Proposal requirements based on the most current completed Drawings and Specifications at that time, which unless otherwise directed by City in writing, will be at 100% Construction Drawings. CM@Risk must mark the face of each document of each set upon which its GMP Proposal is based. These documents must be identified as the GMP Plans and Specifications. CM@Risk must send one set of those documents to the Project Manager, keep one set and return the third set to the Design Professional.

17.7.4 An updated/revised Detailed Project Schedule, Equipment Plan, and Schedule of Values must be included in any GMP Proposal(s), all of which must reflect the GMP Plans and Specifications the Detailed Project Schedule must be shown in relationship to the Project Schedule and identify any variance to the Baseline Project Schedule. Any such Detailed Project Schedule updates/revisions must continue to comply with the requirements of Section 17.3.1 through 17.3.5.

17.7.5 <u>GMP Proposals(s) Review and Approval</u>

17.7.5.1 CM@Risk must meet with the Project Team to review the GMP Proposal(s) and the written statement of its basis. In the event the Project Team discovers inconsistencies or inaccuracies in the information presented, CM@Risk must make adjustments as necessary to the GMP Proposal.

17.7.5.2 If during the review and negotiation of GMP Proposals design changes are required, City may authorize and cause the Design Professional to revise the GMP Plans and Specifications to the extent necessary to reflect the agreed-upon assumptions and clarifications contained in the final approved GMP Proposal. Such revised GMP Plans and Specification will be furnished to CM@Risk. CM@Risk must promptly notify the Project Team in writing if any such revised GMP Plans and Specifications are inconsistent with the agreed upon assumptions and clarifications.

17.7.6 All portions of or items comprising the GMP Proposal are subject to audit by City, as deemed appropriate by City, including, without limitation, any based upon unit prices or Work to be self- performed by CM@Risk, or its affiliates.

17.8 **<u>PAYMENT PROCEDURE FOR PRE-CONSTRUCTION SERVICES</u>**

17.8.1 Requests for monthly payments by CM@Risk for Pre-Construction Services must be submitted monthly and must be accompanied by a progress report, detailed invoices and receipts, if applicable. Any requests for payment must include, as a minimum, a narrative description of the tasks accomplished during the billing period, a listing of any Deliverables submitted, and copies of any Subconsultants' requests for payment, plus similar narrative and listings of Deliverables associated with their Work. Payment for services negotiated as a lump sum will be made in accordance with the percentage of work completed during the preceding month.

17.8.2 In no event will City pay more than seventy-five (75%) of the Agreement Price until acceptance of ALL Pre-Construction Services and award of the final approved Construction Services Agreement for the entire Project by City Council. If CM@Risk does not prepare a

GMP Proposal that is acceptable to City, or the GMP Proposal exceeds the City's Construction Budget, then CM@Risk understands and acknowledges that it will forfeit any right to receive the 25% of the Agreement Price being retained by City.

17.8.3 CM@Risk agrees that no charges or claims for costs or damages of any type will be made by it for any delays or hindrances beyond the reasonable control of City during the progress of any portion of Pre-Construction Services specified in this Agreement. Such delays or hindrances, if any, will be solely compensated for by an extension of time for such reasonable period and may be mutually agreed between the parties. It is understood and agreed, however, that permitting CM@Risk to proceed to complete any such Services, in whole or in part after the date to which the time of completion may have been extended, will in no way act as a waiver on the part of City of any of their respective legal rights herein.

17.8.4 No compensation to CM@Risk will be allowed contrary to Article I, Chapter I, Title 34 of the Arizona Revised Statutes.

17.8.5 If any service(s) executed by CM@Risk is abandoned or suspended in whole or in part, for a period of more than 180 days through no fault of CM@Risk, CM@Risk is to be paid for the services performed prior to the abandonment or suspension.

17.9 **SURVIVAL OF THE DESIGN SERVICES AGREEMENT, DUTIES, OBLIGATIONS AND WARRANTIES**

If the GMP Proposal is accepted by City and a Construction Agreement is entered into between City and CM@Risk, the duties, obligations and warranties of CM@Risk under the Pre- Construction Services Agreement survive and are incorporated into the resulting Construction Agreement.

SECTION 15 – APPENDICES

The following Appendices attached hereto are referenced in the General Conditions and are incorporated herein.

Appendix 1 – Policy Statement for Calculating Delays and Damages
Appendix 2 – Cost Reduction Incentive Proposals for Design Bid Build Agreements
Appendix 3 – Contractor's Affidavit Regarding Settlement of Claims
Appendix 4 – Forms of Performance Bond
Appendix 5 – Forms of Payment Bond
Appendix 6 – Dispute Resolution
Appendix 7 – Certificate of Completion
Appendix 8 – Construction Sign Detail
Appendix 9 – Cost of the Work (Applicable solely to Construction Manager at Risk and Job Order Contracting)
Appendix 10 Landscape Establishment Period

CALCULATING DELAYS AND DAMAGES

The purpose of this policy statement is to establish guidelines and procedures for negotiation between the Contractor and City of Chandler relating to compensation for delays pursuant to Arizona Revised Statutes (A.R.S.) 34-221(F). This policy statement contains notice requirements in addition to those set forth in the Agreement Documents, and will be the Agreement Provision contemplated by that statute.

NOTE: As used herein, the term "Engineer" will refer to the City of Chandler City Engineer or his/her designated representative. Nothing in this Policy Statement will be construed to void any provision in the Agreement which requires timely notice of delays or provides for arbitration or any other procedure for settlement or provides for liquidated damages.

I. TYPES OF DELAYS:

For the purposes of this document, there are essentially four types of delays encountered by City of Chandler Construction Contractors; excusable/compensable, excusable/non-compensable, non- excusable, and concurrent. Only delays that extend Agreement Completion Time set forth in the Agreement Document will be considered for issues relating to Agreement extensions or additional compensation. All other delays are considered to be activity delays and do not entitle the Contractor to either time extensions or additional compensation. Agreement Completion Time will be defined as the date set forth in Maricopa Association of Governments (MAG) Uniform Standard Specification Section 101 and as may be modified by the Agreement Documents.

A. Excusable/Compensable:

These are delays caused solely by the City's actions or inactions, are unreasonable under the circumstances, and which were not within the contemplation of the parties to the Agreement at or prior to the time of execution of the Agreement. Since the Contractor presumably has no control over the events causing the delay, he may be entitled to both Agreement time extensions and additional compensation for delay damages. Further, he/she may be entitled to additional compensation from the impact of that delay on other work. Examples of excusable/compensable (E/C) delays include: failure to properly locate an underground City-owned utility within 2 feet of the actual location; failure to relocate City-owned utilities far enough in advance of construction in an area where the Contractor is scheduled to work that it delays start or completion of the Contractor's regularly scheduled work; failure to provide City-furnished equipment or materials in a timely manner if required by the Agreement; failure to acquire necessary Right-of-Way or Public Utility Easements prior to the Contractor beginning Work in the area; failure to timely return Shop Drawings or other Agreement Submittals in accordance with the Agreement; unreasonable delay by the City in making decisions which affect critical activities; surveying errors when the City is contractually responsible for providing Project Surveying. This list is not meant to be all inclusive, but is intended merely as examples of the type of City action or inaction which can result in a Contractor's claim for additional time and compensation.

B. Excusable/Non-compensable:

These are delays over which neither the City nor the Contractor had control. Since both parties to the Agreement have been potentially damaged by the delay, but neither have caused it, only Time Extensions are warranted. Examples of excusable, non-compensable (E/N) delays include: unusually severe weather; fire; acts of God; failure of non-City owned utilities (SRP, CenturyLink, Cable TV, Southern Pacific Railroad, and Southwest Gas, etc.) to properly or timely locate accurately; failure of non-City owned utilities to relocate in advance of construction; the voluntary or involuntary filing for Bankruptcy protection by a Supplier or Subcontractor which causes the Supplier/Subcontractor to fail to meet a contractual deadline provided the Contractor can provide documentation that he/she executed the required Purchase Orders/Subcontract Agreements and received delivery schedules which, if met, would have eliminated the delay; delays as a result of an incomplete shutdown of a City or non-City owned utility main (the City does not guarantee a complete shutdown). This list also is not necessarily all inclusive but merely indicative of type and class of E/N delays.

C. Non-excusable/Non-compensable:

These are delays caused by the actions or inactions of Contractor or an officer, employee, agent, Subcontractor, Supplier or any other party for whom the Contractor is responsible. Since the Contractor has assumed responsibility for the risks associated with the events that caused the delay, he/she are not entitled to either time extensions or monetary delay damages. All non-excusable delays are also non-compensable. Examples of non- excusable, non-compensable (N/N) delays include: failure to perform by the Contractor, its Subcontractors and/or Suppliers (except as noted in section I.B above); failure to provide adequate labor, materials, and/or equipment on the Project; failure to perform contractually-required coordination with utilities, agencies and other Contractors; failure to notify the Engineer, in writing, of delay impacts within two working days, as required by MAG 104.2.3, or the next work day, as required by MAG 109.8.2; failure to timely submit Shop Drawings; failure to pothole or otherwise visually locate utilities sufficiently ahead of the Work to allow the Engineer to direct corrective action when necessary; delays due to retesting of previously failed work, re-inspection, and/or restaking resulting from faulty workmanship, poor quality control, or lack of compliance with Agreement Specifications. Again, this list is not necessarily all inclusive.

D. Concurrent:

When two or more delays occur simultaneously or overlap, each delay is analyzed separately to determine its impact on the overall project completion date based on when that delay started. Once again, only those delays which actually extend the Agreement completion time are considered as delays. The concurrent delay is considered an additional delay only to the extent it prolongs the delay to the Agreement Completion Time beyond the date that the one it is concurrent with had already delayed that date. For example, if two delays are concurrent, and one is five days long and the second is seven days long, the second concurrent delay will only extend the Agreement Completion Time by two days. The same method of analysis is

used when there are multiple concurrent delays. Only those extending the Project Completion Date are considered to be delays for the purposes of this policy. The portion of each concurrent delay that delays the completion of the work is classified in the same manner as described previously for individual delays and being either E/C, E/N or N/N.

An example of a concurrent delay is where the City delays furnishing material, but the Contractor could not have installed it anyway due to unusually severe weather. The effect of the first delaying activity will extend for the full duration and will be considered controlling on the Contractor's schedule. A subsequent, concurrent delay will thereafter only be considered to effect the project completion (if at all) once the first delaying activity has ceased to impact the project completion. In this case, if the unusually severe weather continued and delayed the work after the material was delivered, the first portion of the delay would be classified E/C (delay for material) and the second as E/N (delay due to unusually severe weather). Using the procedure set forth above, the entire concurrent portion would be considered E/C as shown in the chart which follows.

Example of a Concurrent Delay:

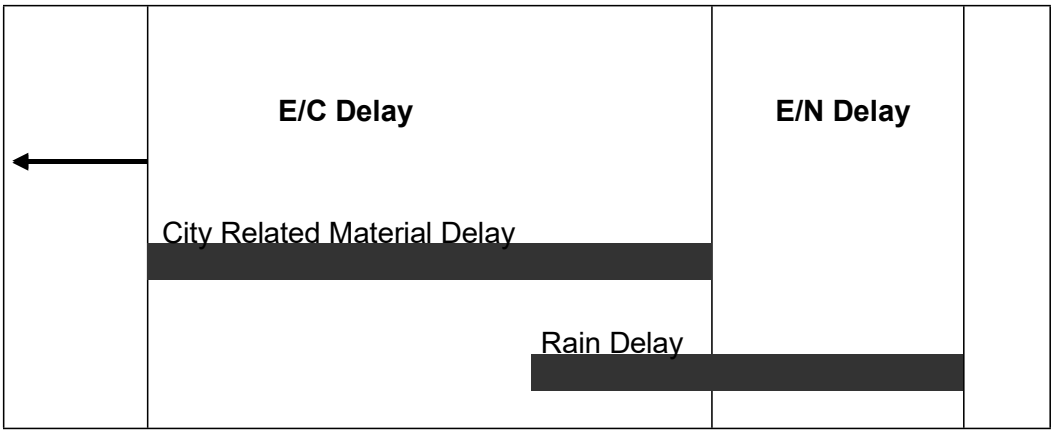

II. ANALYZING THE DELAY:

The Contractor must provide all documents required or requested by the Engineer to analyze the delay(s). It is important to understand that, prior to the delay analysis, delays and their impacts are alleged issues. The information the Contractor provides will be compared with the Inspector's Daily Log, Schedules and other available Project information and together they will support or refute that delays occurred and, if so, how they impact other work and the overall project completion. The Contractor's delay in providing these documents will be considered prima facie evidence that either the delay did not occur or it did not impact the Project Completion Date and any claim for time extension or damages will be denied.

The Engineer will accept delay analyses in CPM format, as these may demonstrate to his/her satisfaction whether or not Project Completion has been impacted by a specific event. If the Contractor chooses not to use CPM scheduling procedures, then the burden will be on the Contractor to prove to the Engineer's satisfaction that the Project Completion has been impacted. The procedures

below assume that the Contractor is using CPM scheduling methods. As a minimum the Contractor must provide the following materials to the Engineer:

A. As-Planned Schedule. The initial construction schedule, required by the Agreement Documents, will be considered the baseline schedule. It is to the Contractor's advantage that the As-Planned (baseline) Schedule be as detailed as possible in order for delays, as they occur, to be incorporated into the schedule in representative locations. It is also to the Contractor's advantage to use a computer software program to generate the schedule since updated schedules are required monthly by the Agreement Documents and since updated schedules are required to support delays and requests for additional compensation for delays. The As-Planned (baseline) Schedule must be presented in network format which clearly shows the interrelationships of the activities. The Contractor must also provide a printout of the activities showing early start, early finish, late start, late finish, duration and float. The activity list printout must also indicate predecessor and successor activities.

B. As-Built Schedules. The as planned (baseline) schedule must be updated with complete progress-to-date information (actualized) up to the date of the start of the alleged delay. Each updated schedule will serve as the as-built schedule for analyzing the alleged delay and provide a new baseline as-planned schedule for the next delay. This process must be repeated for each alleged delay as it occurs. In updating the baseline schedule, the alleged delay must be treated as an activity and inserted into the schedule as a predecessor to the impacted activity (ies). When an activity that has already started is impacted, it is preferable to divide this activity into two parts and show the impact affecting the second part. For schedules which incorporate a time line (or data date), the delay activity must be inserted at the time it actually occurred. Some software scheduling programs have a PAUSE-RESUME feature that can be used to facilitate the requirements. The updated schedule must also be accompanied by a listing of activities as with the baseline schedule. This activities list must contain the alleged delay as an activity showing the duration and the activities which are predecessors and successors to it. When computer generated schedules are used, the Contractor must provide, in electronic media format, the complete data files for the updated schedule that included the delay activity, preferably either in Suretrak or in Microsoft Project. Each electronic media must contain a label identifying the Project name, Contractor's name, program name and version number, data date and project finish date.

C. Other Documents: In order to determine the amount of the alleged delay and if it is compensable, the Contractor must provide all backup documentation relevant to the issue and as required by the Engineer. This documentation must include copies of such items as: purchase orders; delivery schedules; correspondence; memoranda of telephone calls; force account daily worksheets (initialed by the Inspector); payroll data; estimating (bid) worksheets; and any other materials which may be requested by the Engineer.

D. Procedure: Only after receipt of sufficient documentation will the Engineer analyze each alleged delay and determine if it is supported or refuted. If supported, the Engineer will determine if it is excusable or non-excusable, compensable or non-

compensable. If the Engineer determines that the delay did not affect the Project Completion, the as-planned schedule, which has been updated to the date of the alleged delay, must be revised to indicate this. If the Engineer determines the delay did occur but was N/N, then no time extension will be granted. It is imperative that an actualized schedule be submitted as soon as the occurrence of the alleged delay is known. In no event will the Contractor submit an actualized updated schedule later than 60 days after the occurrence of the alleged delay becomes known.

If the Engineer determines the delay did occur and was excusable but, due to a reason listed in section I.B. is non-compensable, he/she will determine the length of the E/N delay and prepare a Change Order to add that time to the Agreement. The Engineer's decision will be final.

If the Engineer determines the delay was excusable and compensable, he/she will determine the length of the E/C delay and proceed to review the Contractor's damage calculations in accordance with Section III. The Engineer will check the Contractor's calculations, review the backup documentation provided, and prepare a Change Order to cover both the additional compensation and the time extension. The Engineer's decision on both the time extension and additional compensation for the delay will be final.

If the issue involves a concurrent delay, the Engineer will analyze available data to determine the portions which are E/C, E/N, and/or N/N as described above. The Engineer will proceed to determine the length of E/C delay and verify the Contractor's delay damage calculations, if any are provided. Upon completion of this review, the Engineer will prepare a Change Order for the Contractor's review and signature. The Engineer's decision regarding excusable delay and additional compensation for the delay is final.

The amount of time the Engineer will require to analyze the alleged delay(s) will depend upon the Engineer's workload, the complexity of the delay analysis, availability of supporting data, extent of cooperation by the Contractor, and other factors beyond the Engineer's control. It is entirely possible other delay(s) may occur while the Engineer is analyzing particular claim for delay(s). The Engineer's failure to respond to the Contractor in a set period of time will not be used as the basis for a further delay claim or as justification for extending and existing delay claim. The time required for delay analysis by the Engineer will not be counted against the time allotted for processing Final Payment as required by (MAG Section 109.7(B)) or the release of retention and Final Payment as prescribed by A.R.S. Arizona Revised Statutes §34-221.

III. CALCULATING MONETARY DELAY DAMAGES:

Additional compensation for delay, when authorized by the Engineer, will be calculated in accordance with MAG Section 109.5 ACTUAL COST WORK with the following exceptions:

A. No additional compensation or other monetary damages will be awarded or paid for any loss of anticipated profits by the Contractor, Subcontractors or Suppliers.

B. No additional compensation or other monetary damages will be awarded for home office overhead or non-project general conditions of the Contractor, Subcontractors or Suppliers.

C. Equipment:

1. Contractor-owned equipment rate calculations must be computed in accordance with Section 109.04(D)(3), Arizona Department of Transportation "Standard Specifications for Road and Bridge Construction," 2008 or latest edition and as modified herein. Year and regional adjustment factors must be based on the most recent publications of the Rental Rate Blue Book for Construction Equipment, published by the Equipment Guide-Book Company, San Jose, CA, same as provided by ADOT and in print as of the date of alleged delay. In no event will the compensation for Contractor-owned equipment exceed the purchase price, including tax, paid by the Contractor for the equipment. Compensation will not be allowed for small tools or equipment that show a daily equipment rental rate of less than $5.00 per day or for unlisted equipment that has a value of less than for hundred dollars ($400.00).
2. For leased and rented equipment or equipment not otherwise listed in the Blue Book, rental contracts, or other supporting data will be used to establish the hourly rate. No hourly operating expense will be allowed for delay on standby equipment. In no case will equipment be considered for rental which exceeds the hourly rate for the first eight hours and the daily rate divided by eight for all additional hours as compared with similar equipment listed in the Blue Book. The hourly standby rate must be computed as the lesser of:

    a. Dividing the monthly invoice or rental value by 176 hours per month when the equipment is utilized by the Contractor for more than three weeks;

    b. Dividing the monthly invoice or rental value by 40 hours per week when the equipment is utilized by the Contractor for more than three days.

    In no event will compensation be paid for delay at more than 8 hours per day or 40 hours per week.

3. Except for vehicles used by supervisory personnel, all equipment will be paid at the "standby" rate during the delay period.

4. Equipment brought solely to mitigate the delay (such as pumps, light plants, etc.) may be paid in accordance with ADOT section 109.04(D) (3).

5. The Blue Book regional adjustment will apply in determining rental rates.

D. Material:

Allowable material charges may include, in addition to material incorporated in the

work material used to mitigate the delay such as barricades, plates, shoring, cold mix, etc. Except in emergencies the Contractor will not employ such material without the prior written approval of the Engineer.

E. Labor:

1. Except for Supervisory Personnel (Superintendent, Project Engineer, and Foremen), labor wages will not be paid after the first one-half day of claimed delay or impact. It is expected the Contractor will reassign or layoff unneeded employees.

2. For Foreman wages to be included, that Foreman must have been actively employed on the project prior to the commencement of the delay and be directly responsible for the activity being delayed.

3. Labor burden must be actual amounts incurred but must not exceed the ADOT approved rate.

F. All costs (equipment, material, and labor) must be substantiated by the City of Chandler's Daily Work Reports.

IV. DOCUMENT REQUIRED FOR CLAIM ANALYSIS:

For purposes of reviewing the Contractor's request for additional compensation, it will be required that the Contractor submit the following listed information. Information requested must be prepared on forms which are substantially similar to the City of Chandler's Daily Work Report form, a copy of which is attached as an exhibit.

A. Labor:

For each employee, laborer, and foreman, for which compensation is requested: Name, classification, dates of work performed, daily hours worked, total hours worked, labor rates, labor burden rates, overtime or premium time charges. Further, the Contractor must make available for inspection and copying to the Engineer the following listed documentation.

1. Certified payroll reports for the period of work claimed.
2. Accounting of Fringe Benefits – certified by a CPA.
3. Contractor's and Subcontractor's daily field reports and daily diaries.

B. Materials:

For all materials for which compensation is requested, if any, total quantities of materials, prices, extensions and transportation costs must be provided on a daily basis. Further, the Contractor must make available for inspection and copying to the Engineer the following listed documentation.

1. Invoices for all materials incorporated.
2. Weigh tickets.
3. Purchase orders.

4. Delivery schedules.
5. Quotes or proposals from manufacturers or supplier.
6. Freight bills, Bills of Lading, or other documentation to show transportation costs.
7. Restocking charges-invoices from vendor.

C. Equipment:

For all equipment, the Contractor must provide the Engineer with the designation, dates and hours of usage, dates and hours of standby, if any, daily hours, total hours, rental rates and extension for each unit of equipment and machinery. Rental rates will be as established in Section III. Further, the Contractor must make available for inspection and copying to the Engineer the following listed documentation.

1. Owned:
   a. Purchase contracts(s).
   b. Depreciation schedule(s).
   c. Invoices for fuel, lube, repairs and other operating costs.

2. Leased:
   a. Lease agreement with hourly rate, overtime rate, double shift rate, etc.
   b. Invoices or other documentation showing hours worked on a daily basis.

D. Subcontractors/Owner-Operators:

In the event the Contractor submits a claim which includes requests for compensation for Subcontractors of Owner-Operators, the same information requested of the Contractor must be provided by the Subcontractor/Owner-Operator. Further, the Contractor must make available for inspection and copying to the Engineer the following listed documentation.

1. Bid/Estimate work sheets and/or spreadsheets.
2. Subcontract Agreements or Agreements with Owner-Operator.
3. All invoices and billing statements received from the Subcontractor/Owner-Operator which relates to the amount requested.

E. Miscellaneous:

Further, the Contractor must make available for inspection and copying to the Engineer the following listed documentation.

1. Evidence of payment for bonds and insurance premiums (MAG 109.5.6).
2. Taxes – unless the Contractor can show otherwise, taxes are reimbursable at 65% of the total cost (less bonds and insurance).

V. TIME LIMIT ON SUBMISSIONS OF CLAIM FOR DELAY OR IMPACT DAMAGES:

No claims for delay or impact damages will be considered or allowed more than 45 days after the event or occurrence which the Contractor claims gives rise to the delay or impact. In no event will a

claim for delay or impact damages be considered after submission by the Contractor of the Final Payment Request.

COST REDUCTION INCENTIVE PROPOSALS FOR DESIGN BID BUILD AGREEMENTS

The Contractor may submit to the Engineer proposals for modifying the Plans, Specifications, or other requirements of the Agreement for the sole purpose of reducing the total cost of Project construction. The proposals must not impair in any manner the essential functions or characteristics of the project; including but not limited to service life, economy of operations, ease of maintenance, desired appearance, compatibility with existing or planned equipment, standardization of systems, or design and safety standards.

It must not be inferred from this Policy that the Engineer is required to consider any proposal submitted.

Submissions that propose changes in the basic design of a bridge, propose changes in pipe line size, materials, bedding conditions, pipe specifications; or that propose any change in pavement design will not be considered.

Proposals submitted pursuant to this Policy will be identified as Cost Reduction Incentive Proposals. They must be submitted in writing and, at a minimum, contain the following.

1. Complete the attached or similar cost reduction incentive proposal form.

2. A description of both the existing Agreement Requirements for performing the work and the proposed changes.

3. All Engineering Drawings and computations necessary for the thorough and expeditious evaluation.

4. An itemization of the existing Agreement Requirements that must be changed if the Proposal is adopted and a recommendation as to the manner in which the change should be made.

5. A detailed estimate of the cost of performing the Work under the existing Agreement and under the proposed changes, including the cost of developing and implementing the changes.

6. The Agreement items affected by the proposed changes and any variations in quantities resulting from the changes.

7. An objective estimate of any effects the proposal will have on collateral cost to the City, costs of related items, and cost of maintenance and operation.

8. A statement as to the effect that the Proposal will have on the time for the completion of the Project.

9. A statement as to the time by which a Change Order adopting the Proposal must be executed or when the Engineer must have given verbal approval.

Proposals will be processed expeditiously; however, the City will not be liable for any delay in acting upon any Proposal nor for any failure to accept any Proposal pursuant to this Special Provision.

The Engineer will be the sole judge of the acceptability of a Proposal and of the estimated net savings in construction costs from the adoption of all or any part of the Proposal. The Contractor will be notified in writing by the Engineer as to whether his/her Proposal has been accepted. The decision by the Engineer is final.

When the City deems such action to be appropriate, it reserves the right to require the Contractor to share equally in the cost to the City of investigating, evaluating, and processing the proposal as a condition for the consideration of such Proposal. Such cost must be shared whether the Proposal is accepted or rejected. When such a condition is imposed, the City will estimate these costs and the Contractor must indicate his acceptance thereof in writing. Such acceptance will authorize the City to deduct the Contractor's share of the costs from any monies due or that may become due to the Contractor under the Agreement.

If the Contractor's Proposal is accepted in whole or in part, the necessary Agreement Modifications and Agreement Price Adjustments will be affected by the execution of a Change Order which will specifically state that it is executed pursuant to this Special Provision.

The Contractor must continue to perform the work in accordance with the requirements of the Agreement until a Change Order incorporating the Proposal has been executed or until he/she has been given verbal approval by the Engineer that his/her Proposal has been accepted. If the Change Order has not been executed or he/she has not been given verbal approval on or before the date specified on the attached cost reduction incentive proposal form or on or before such other date as the Contractor may have subsequently specified in writing, the Proposal may be deemed to be rejected.

The executed Change Order will incorporate the changes in the Plans, Specifications, or other requirements of the Agreement which are necessary to permit the Proposal, or such part of it which has been accepted, to be put into effect, and will include any condition – upon which the City's approval thereof is based, if such approval is conditional. The executed Change Order may also extend the time for the completion of the Agreement if such an extension has been deemed to be warranted by the Engineer as a result of his evaluation of the Proposal.

The executed Change Order will also establish the estimated net savings in the cost of performing the Work attributable to the Proposal effectuated by the Change Order. In determining the net savings, the right is reserved to the Engineer to disregard the Agreement bid prices if, in his/her judgment, such prices do not represent a fair measure of the value of the Work to be performed or to be deleted. The net savings will be established by determining the Contractor's cost of performing the Work, taking into account his/her cost of developing the Proposal and implementing the change, and reducing this amount by any ascertainable collateral costs to the City. The executed Change Order may provide that the Contractor be paid 50 percent of the estimated net savings amount.

The executed Change Order may also provide for the adjustment in Agreement prices. Agreement prices may be adjusted by subtracting the City's share of the accrued net savings.

The amount specified to be paid to the Contractor in the executed Change Order which effectuates a Cost Reduction Proposal will constitute full compensation to the Contractor for the Cost Reduction

Proposal and the performance of the work thereof pursuant to the said Change Order.

Upon acceptance of a Cost Reduction Incentive Proposal, any restrictions imposed by the Contractor on its use or on disclosure of the information will become void, and the City thereafter will have the right to use all or any part of the Proposal without obligation or compensation of any kind to the Contractor.

COST REDUCTION INCENTIVE PROPOSAL FORM

TO: CIP City Engineer

FROM:

PROJECT NAME: **101/202 REDUNDANT 66-INCH SEWER LINE**

CITY PROJECT NUMBER: **WW2402.401**

DATE:

Summary of Change (Brief description of proposed change including advantages and disadvantages):

ESTIMATED COST SUMMARY (Attached detailed estimate):

A.	Original Cost:	$
B.	Proposed Cost:	$ _____
C.	Construction Savings (A-B):	$ _____
D.	Gross Savings (Included OH %, Bond %)	$ _____
E.	Contractor Implementing	$_____
F.	City Implementing Cost:	$_____
	Reduction in Agreement Price (C+D-E-F) x 50%:	$ _____

Date by which a Change Order must be issued so as to obtain maximum cost reduction:

CITY OF CHANDLER, ARIZONA
PUBLIC WORKS & UTILITIES DEPARTMENT

CONTRACTOR'S AFFIDAVIT REGARDING SETTLEMENT OF CLAIMS

_____, Arizona
Date _____

Project Name: 101/202 Redundant 66-inch Sewer Line
City Project No.: WW2402.401

To the City of Chandler, Arizona

Gentlemen:

This is to certify that all lawful claims for materials, rental of equipment and labor used in connection with the construction of the above project, whether by subcontractor or claimant in person, have been duly discharged.

The undersigned, for the total compensation of $_____, as set out in the final pay application, as full and complete payment under the terms of the Agreement, hereby waives and relinquishes any and all further claims or right of lien under, in connection with, or as a result of the above described project. The undersigned further agrees to indemnify and save harmless the City of Chandler against any and all liens, claims or liens, suits, actions, damages, charges and expenses whatsoever, which said City may suffer arising out of the failure of the undersigned to pay for all labor performances and materials furnished for the performance of said installation.

Signed and dated at _____, this _____ day of _____ 20_____.

_____
CONTRACTOR

By _____

STATE OF ARIZONA)
) SS
COUNTY OF MARICOPA)

The foregoing instrument was subscribed and sworn to before me this _____ day of _____ 20 _____.

_____
Notary Public

_____
My Commission Expires

PERFORMANCE BOND

ARIZONA STATUTORY PERFORMANCE BOND
PURSUANT TO TITLES 28, 34, AND 41, ARIZONA REVISED STATUTES
(Penalty of this bond must be 100% of the Agreement amount)

KNOW ALL MEN BY THESE PRESENTS THAT:_____

(hereinafter "Principal"), and _____ (hereinafter "Surety"), a corporation organized and existing under the laws of the State of _____ with its principal office in the City of _____, holding a certificate of authority to transact surety business in Arizona issued by the Director of Insurance pursuant to Title 20, Chapter 2, Article 1, as Surety, are held and firmly bound unto _____(hereinafter "Obligee") in the amount of _____ (Dollars) ($_____), for the payment whereof, Principal and Surety bind themselves, and their heirs, administrators, executors, successors and assigns, jointly and severally, firmly by these presents.

WHEREAS, the Principal has entered into a certain written Agreement with the Obligee, dated

the _____ day of _____, 20___ for construction of **WW2402.401, 101/202 Redundant 66-inch Sewer Line** which Agreement is hereby referred to and made a part hereof as fully and to the same extent as if copies at length herein.

NOW, THEREFORE, THE CONDITION OF THIS OBLIGATION IS SUCH, that if the Principal faithfully performs and fulfills all the undertakings, covenants, terms, and conditions of the Agreement during the original term of the Agreement and any extension of the Agreement, with or without notice of the Surety, and during the life of any guaranty required under the Agreement, and also performs and fulfills all the undertakings, covenants, terms, conditions, and agreements of all duly authorized modifications of the Agreement that may hereafter be made, notice of which modifications to the Surety being hereby waived, the above obligation is void. Otherwise it remains in full force and effect.

PROVIDED, HOWEVER that this bond is executed pursuant to the provisions of Title 34, Chapter 2, Article 2, Arizona Revised Statutes, and all liabilities on this bond will be determined in accordance with the provisions of Title 34, Chapter 2, Article 2, Arizona Revised Statutes, to the same extent as if it were copied at length in this Agreement.

The prevailing party in a suit on this bond may recover as part of the judgment reasonable attorney fees that may be fixed by a judge of the court.

Witness our hands this _____ day of _____, 20__.

_____
PRINCIPAL SEAL

_____
AGENT OF RECORD

By _____

_____
SURETY SEAL

_____
AGENT ADDRESS

PAYMENT BOND

ARIZONA STATUTORY PAYMENT BOND
PURSUANT TO TITLES 28, 34, AND 41, OF THE ARIZONA REVISED STATUTES
(Penalty of this Bond must be 100% of the Agreement amount)

KNOW ALL MEN BY THESE PRESENTS THAT:_____

(hereinafter "Principal"), as Principal, and _____(hereinafter "Surety"), a corporation organized and existing under the laws of the State of _____ with its principal office in the City of _____, holding a certificate of authority to transact surety business in Arizona issued by the Director of the Department of Insurance pursuant to Title 20, Chapter 2, Article 1, as Surety, are held and firmly bound unto _____ (hereinafter "Obligee") in the amount of _____ (Dollars) ($_____), for the payment whereof, the Principal and Surety bind themselves, and their heirs, administrators, executors, successors and assigns, jointly and severally, firmly by these presents.

WHEREAS, the Principal has entered into a certain written Agreement with the Obligee, dated the _____ day of _____, 20___ for construction of **WW2402.401, 101/202 Redundant 66-inch Sewer Line** which Agreement is hereby referred to and made a part hereof as fully and to the same extent as if copied at length herein.

NOW, THEREFORE, THE CONDITION OF THIS OBLIGATION IS SUCH, that if the Principal promptly pays all moneys due to all persons supplying labor or materials to the Principal or the Principal's subcontractors in the prosecution of the work provided for in said Agreement, this obligation is void. Otherwise it remains in full force and effect.

PROVIDED, HOWEVER that this bond is executed pursuant to the provisions of Title 34, Chapter 2, Article 2 Arizona Revised Statutes, and all liabilities on this bond will be determined in accordance with the provisions, conditions and limitations of Title 34, Chapter 2, Article 2, Arizona Revised Statutes, to the same extent as if it were copied at length in this Agreement.

The prevailing party in a suit on this bond may recover as part of the judgment reasonable attorney fees that may be fixed by a judge of the court.

Witness our hands this _____ day of _____, 20__.

_____
PRINCIPAL SEAL

_____
AGENT OF RECORD

By _____

_____
SURETY SEAL

_____
AGENT ADDRESS

DISPUTE RESOLUTION

A. INFORMAL DISPUTE RESOLUTION

The parties to the Agreement agree that time is of the essence in relation to performance of the Agreement and completion of the Project, therefore any and all disputes in relation to the Agreement will initially be referred to the Project Manager, the Design Professional Representative and/or the Contractor Representative as applicable to the dispute, for immediate resolution. If, after good faith efforts to reach a resolution, none is reached, any party to the dispute may submit the dispute to the Dispute Resolution Representative ("DRR") process set forth below, which is intended to be an expedited process.

B. DISPUTE RESOLUTION REPRESENTATIVE ("DRR") PROCESS

1. The Parties under the Agreement agree that all claims and disputes in relation to the Project which are not resolved in the ordinary course of the Project ("Claim" or "Claims") will, as a prerequisite to any mediation, or litigation of the Claim, first be submitted for resolution between the designated Dispute Resolution Representatives of the Parties as set forth herein (the "DRR Process").

2. The DRR Process will be initiated through service of a DRR Notice as set forth below:

   a. For claims by the Contractor or the Design Professional, the DRR Process will be initiated by the party asserting the claim serving written notice on the City setting forth in detail: (i) the basis for the claim; (ii) the effect of the Claim upon the construction of, and/or Project Schedule for, the Project;
   (iii) the specific relief requested, the amount thereof, and how such was calculated; (iv) the parties involved in the Claim, and how they are involved; (v) the specific Agreement provisions in the Agreement Documents (including, if applicable, drawings and specifications) which apply; and (vi) efforts made to date to resolve the Claim.

   b. For claims by the City, the DRR process will be initiated by the City providing written notice to the other parties of the basis and amount of its claim, the parties involved in the Claim, and how they are involved, the provisions in the Agreement Documents that apply, and the relief requested.

   c. The DRR Notice will be hand-delivered and e-mailed to the other parties' designated Dispute Resolution Representatives.

3. The other parties will respond in writing to the DRR Notice ("DRR Response") within ten (10) calendar days of receipt of the DRR Notice, setting forth those items set forth in the DRR Notice that they agree with, dispute, and/or have questions concerning. The DRR Response will be hand-delivered and e-mailed to the other parties' Dispute Resolution Representatives.

4. The designated Dispute Resolution Representatives for the Parties to the claim will then meet as soon as possible and in any event within twenty (20) calendar days of submission of the DRR Notice (regardless of whether a DRR Response has been submitted by all parties involved in the dispute), at a mutually agreed upon time and place, to attempt to resolve the Claim based upon the DRR Notice and DRR Response.

5. At any time after the first meeting required above, either party may terminate the DRR Process by written notice to the other party.

6. The parties may agree, in writing, to extend or modify the time limits or other provisions of the DRR process in relation to a specific pending Claim.

7. Unless otherwise designated in a written notice to the other parties, the City and the representatives of the Contractor and of the Design Professional will act as the parties' designated Dispute Resolution Representatives.

8. If a resolution of the Claim is reached, that resolution must be set forth in writing and must be signed by the Parties' designated Dispute Resolution Representative. If the resolution involves a change in any Agreement Documents, the Agreement Price, the Project Schedule, or any other change requiring a written Change Order or Amendment, the parties must execute an appropriate written Change Order or Amendment pursuant to the terms of the Agreement Documents.

C. MEDIATION

1. Unless extended by written agreement of the parties involved in the dispute, any Claim not resolved through the DRR process set forth above within five (5) calendar days after the meeting required under B (4) above, or after the DRR is terminated pursuant to B (5) above, whichever is earlier, will be submitted to mediation as a condition precedent to litigation by either party.

2. The mediation will be commenced by written demand upon the other party for mediation. If the parties cannot agree upon a mediator within ten (10) calendar days of the written demand, either party may make a request to the Civil Presiding Judge of the Maricopa County Superior Court to appoint a mediator. The mediation will occur within forth (40) calendar days of the written demand for mediation, unless the parties agree, in writing, to a longer period of time.

3. The qualifications for the mediator will be that he/she be: (a) an experienced mediator, arbitrator or litigator of construction disputes; and (b) having engaged a significant portion of his/her time involving and/or resolving construction disputes for at least the past five (5) years.

4. Each party will provide to the other party and the mediator all of the information and documentation required under B(1) and (2) above, together with any additional information and documentation which the party believes relevant. In addition, the parties will exchange, and provide to the mediator such additional memoranda, information and/or documentation, as the

mediator may request, and in the form and at such times, as the mediator may direct.

5. The parties will share the mediator's fee and any filing fees equally. The mediation will be held in Chandler, Arizona, unless another location is mutually agreed upon. Agreements reached in mediation will be specifically enforceable in any court having jurisdiction thereof.

D. LITIGATION

Any claim arising out of or related to the Agreement, except Claims relating to aesthetic effect and except those claims waived as provided for in the Agreement Documents, must be resolved through litigation in the Maricopa County, Arizona Superior Court.

CITY OF CHANDLER, ARIZONA
PUBLIC WORKS & UTILITIES DEPARTMENT

CERTIFICATE OF COMPLETION

PROJECT NAME:	**101/202 REDUNDANT 66-INCH SEWER LINE**		
CITY PROJECT NO.:	**WW2402.401**		
If Federally Funded:			
FEDERAL NO.:		**ADOT NO:**	

(*This section to be completed by Prime*)
I HEREBY CERTIFY THAT ALL GOODS AND/OR SERVICES REQUIRED BY CITY OF CHANDLER FOR THIS PROJECT HAVE BEEN DELIVERED IN ACCORDANCE WITH THE AGREEMENT DOCUMENTS AND BID SPECIFICATIONS AND ALL ACTIVITIES REQUIRED BY THE AGREEMENTOR UNDER THE AGREEMENT HAVE BEEN COMPLETED AS OF THE COMPLETION DATE LISTED HERE:

FINAL ACCEPTANCE DATE:	

PRIME CONTRACTOR:

FIRM NAME:			
PRINCIPAL:			
TITLE:			
SIGNATURE:		DATE:	

CERTIFIED BY [*INSERT NAME AND TITLE OF PARTY THAT OVERSEES CONSTRUCTION*]:

FIRM NAME:			
SIGNATURE:		DATE:	

PROJECT ACCEPTED BY CITY OF CHANDLER:

NAME:			
SIGNATURE:		DATE:	

CONSTRUCTION SIGN DETAIL

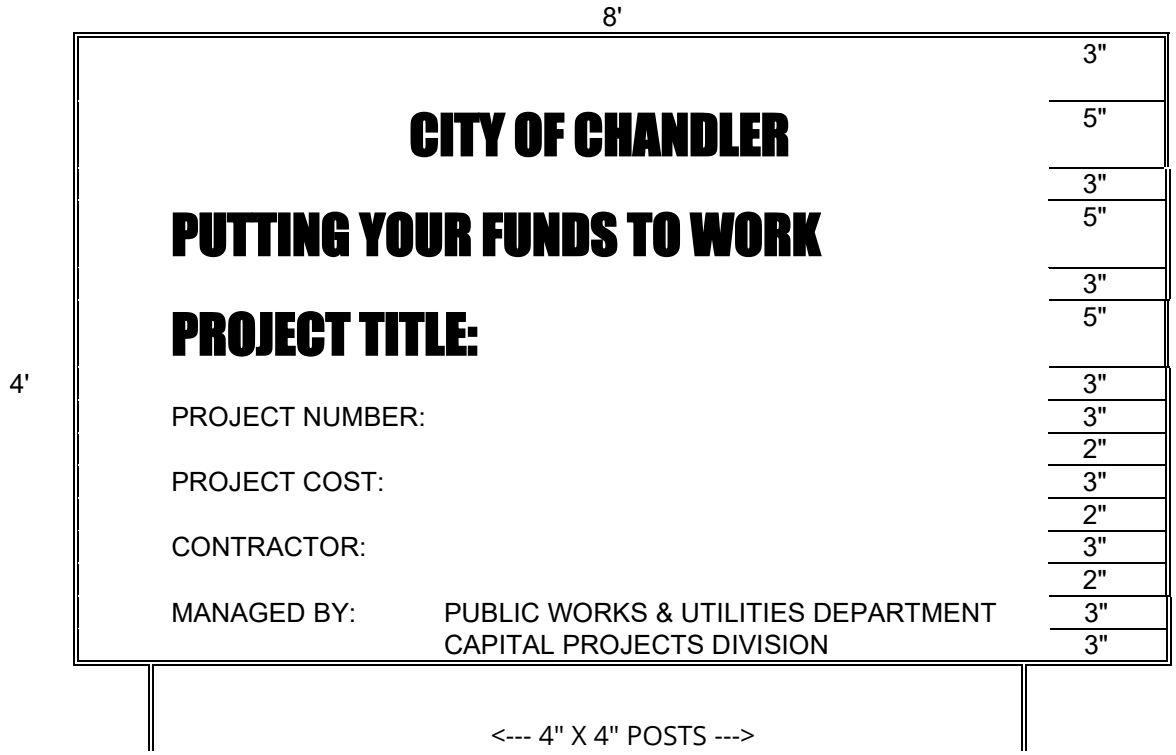

NOTES:

SIGN(S) MUST BE FURNISHED AND ERECTED PRIOR TO COMMENCEMENT OF CONSTRUCTION. POSTS MUST BE ANCHORED A MINIMUM OF TWO FEET INTO THE GROUND. BOTTOM OF SIGN MUST BE A MINIMUM OF FOUR FEET ABOVE THE GROUND.

TYPICAL PROJECT IDENTIFICATION SIGN FOR GENERAL PROJECTS MUST BE NON-REFLECTORIZED GREEN BACKGROUND, AND NON-REFLECTORIZED WHITE LETTERS AND NUMERALS.

ONE SIGN MUST BE ERECTED FOR BUILDINGS AND OTHER LIMITED AREA SINGLE SITES. FOR MULTIPLE SITES, ONE SIGN MUST BE ERECTED AT EACH SITE.

FOR LINEAR PROJECTS ONE HALF MILE OR LONGER, PLACE ONE SIGN AT EACH END OF THE PROJECT.

COST OF THE WORK

(APPLICABLE SOLELY TO CONSTRUCTION MANAGER AT RISK AND JOB ORDER CONTRACTING)

SECTION 1 – COSTS TO BE REIMBURSED

1.1 Cost of the Work

The term Cost of the Work will mean costs necessarily incurred by Contractor in the proper performance of the Work. Such costs must be at rates not higher than the standard paid at the place of the Project except with prior consent of City. The Cost of the Work will include only the items set forth in this Section 1.

1.2 Labor Costs

1.2.1 Wages of construction workers directly employed by the Contractor to perform the construction of the Work at the site or, with City's approval, at off-site workshops. Cost to be reimbursed will be the actual wages paid to the individuals performing the work.

1.2.2 Wages or salaries of the Contractor's supervisory and administrative personnel when stationed at the site with City's approval. No Contractor personnel stationed at the Contractor's home or branch offices will be charged to the Cost of the Work. Non-field office based Contractor management and support personnel are expected to provide service and advice from time to time throughout the job and his/her time devoted to Project matters is considered to be covered by the Contractor's Fee.

1.2.3 Wages and salaries of Contractor's supervisory or administrative personnel who would normally be stationed at the field office in accordance with Section 1.2.2 but who become engaged, at factories, workshops or on the road, in expediting the production or transportation of materials or equipment required for the Work, but only for that portion of his/her time required for the Work. Employee bonuses and/or costs associated with Employee Stock Ownership Plans ("ESOP") will not be considered reimbursable labor or labor burden costs and will be considered non-reimbursable costs considered to be covered by the Contractor's Fee.

1.2.4 Costs paid or incurred by Contractor for taxes, insurance, contributions, assessments and benefits required by law or collective bargaining agreements and, for personnel not covered by such agreements, customary benefits such as sick leave, medical and health benefits, holiday, vacations and pensions, provided such costs are based on wages and salaries included in the Cost of the Work under Subparagraphs 1.2.1 through 1.2.3.

1.2.4.1 Cost of the Work will include the actual net cost to Contractor for worker's compensation insurance attributable to the wages chargeable to the Cost of Work per this Agreement. The actual net cost of worker's compensation must take into consideration all cost adjustments due to experience modifiers, premium discounts, policy dividends, retrospective rating plan premium adjustments, assigned risk pool rebates, any applicable weekly maximums, etc. Contractor may charge an estimated amount for worker's compensation insurance costs, but will make appropriate cost adjustments to actual costs within 45 days of receipt of actual cost adjustments from the insurance carrier.

1.2.4.3 Overtime wages paid to salaried personnel (if approved in advance in writing by City) will be reimbursed at the actual rate of overtime pay paid to the individual. No time charges for overtime hours worked on the Project will be allowed if the individual is not paid for the overtime worked.

1.2.4.4 Any overtime premium or shift differential expense to be incurred by Contractor for hourly workers will require City's advance written approval before the incremental cost of the overtime premium or shift differential will be considered a reimbursable cost. If the Contractor is required to work overtime as a result of an inexcusable delay or other coordination problems caused by the Contractor or anyone he/she is responsible for, the overtime premium and/or shift differential expense portion of the payroll expense and related labor burden costs will be considered as cost not to be reimbursed.

1.2.4.5 Reimbursable labor burden costs will be limited to payroll taxes, worker's compensation insurance, the employer's portion of union benefit costs for union employees working on the Project, and the actual verifiable fringe benefit costs incurred by Contractor for non-union individuals working on the Project subject to the following maximum percentages for the following reimbursable non-union fringe benefit costs. The following maximums (as a percentage of reimbursable actual wages by individual) will apply for each of the following types of fringe benefit costs specifically attributable to each of the non-union personnel working on the Project:

- Medical Insurance, Dental, Life & AD&D Insurance: 12.00%
- Holiday, vacation and other paid time not worked: 10.00%
- Pension Plan Contributions to Vested Employee Account, Simplified Employee Pension Plans, or 401K matching plans (Note: ESOP related costs are covered by the Contractor Fee) 10.00%

For non-union personnel, no other fringe benefit costs (other than the three specific categories listed immediately above, will be considered reimbursable Cost of Work. Any labor burden costs that are in excess of the amounts considered reimbursable or are otherwise not considered reimbursable under the terms of this agreement are intended to be covered by the Contractor Fee.

1.3 Subcontract Costs

1.3.1 Payments made by Contractor to Subcontractors in accordance with the requirements of the subcontracts.

1.3.2 For Scope of Work Bid Packages typically performed by Subcontractors, Contractor may "self- perform" such work on an actual cost basis subject to an agreed upon Guaranteed Maximum Price for the "self-performed work". The Contractor must, unless agreed to by City in writing, bid his/her proposed guaranteed Maximum Price for the work to be "self-performed" against at least three other interested trade Contractors. All savings under any such Subcontract for "self-performed work" must be applied to reduce the Cost of Work under the Agreement and the Guaranteed Maximum Price. For purposes of defining "self-performed work" subject to this provision, any division of Contractor, or any separate Contractor or Subcontractor that is partially owned or wholly owned by the Contractor or any of his/her employees or employee's relatives will be considered a related party entity and will be subject to this provision regarding "self-performed work". No self-performed work will

be allowed to be performed on a Fixed Price basis.

1.3.3 Contractor (with respect to its Suppliers, Subcontractors and all lower tier Subcontractors) must provide City advance written notice and must obtain City's approval for any proposed Subcontract Change Order, Material Purchase Order, or other financial commitment in an amount in excess of $5,000 prior to placing such order or entering into such agreement (regardless of whether or not any such commitment will affect the prime Agreement Guaranteed Maximum Cost). It is agreed that sums applicable to any Subcontract Change Order, Purchase Order or other financial commitment entered into in violation of the above notice and approval requirement will not be included in the amounts owning to Contractor, Subcontractors or Suppliers whether as Costs of the Work or as reasonable termination costs in the event of termination.

1.4 Costs of Material and Equipment Incorporated in the Completed Construction

1.4.1 Costs, including transportation and storage, of materials and equipment incorporated or to be incorporated in the completed construction.

1.4.2 Costs of materials described in the preceding Subparagraph 1.4.1 in excess of those actually installed to allow for reasonable waste and spoilage. Unused excess materials, in any, will become City's property at the completion of the Work or, at City's option, may be sold by the Contractor. Any amounts realized from such sales must be credited to City as a deduction from the Cost of Work.

1.4.3 Proceeds from the sale of recyclable materials, scrap, waste, etc. will be credited to job cost.

1.5 Costs of Other materials and Equipment, Temporary Facilities and Related Items

1.5.1 Costs, including transportation and storage, installation, maintenance, dismantling and removal of materials, supplies, temporary facilities, machinery, equipment and hand tools not customarily owned by construction workers, that are provided by the Contractor at the site and fully consumed in the performance of the Work; and cost (less salvage value) of such items if not fully consumed, whether sold to others or retained by Contractor. Cost for items previously used by Contractor will mean fair market value.

1.5.2 Rental charges for temporary facilities, machinery, equipment, and hand tools not customarily owned by construction workers that are provided by Contractor at the site, whether rented from Contractor or others, and costs of transportation, installation, minor repairs and replacements, dismantling and removal thereof. Rates and quantities of equipment rented will be subject to City's prior written approval.

1.5.2.1 The Projected usage for each piece of equipment to be rented for use on the Project and the estimated total rentals must be considered by Contractor before the piece of equipment is rented so that an appropriate rent versus buy decision can be made. Purchased equipment must be considered "job owned". At the completion of the Project, Contractor must transfer title and possession of all remaining job-owned equipment to City, or Contractor may keep any such equipment for an appropriate fair market value credit to job cost, which will be mutually agreed to by City and Contractor.

1.5.2.2 Each piece of equipment to be rented must have hourly, daily, weekly and monthly rates and

the most economical rate available will be reimbursed based on the circumstances of actual need and usage of the piece of equipment while it is stationed at the jobsite. When the piece of equipment is no longer needed for the work, no rental charges will be reimbursed if the piece of equipment remains at the jobsite for the convenience of Contractor.

1.5.2.3 Equipment Rental Rates

1.5.2.3.1 Compensation for equipment used on the Project will be paid in accordance with the Equipment Plan submitted by Contractor in the accepted GMP Proposal and no payments will be made in excess of the rates set forth in the Equipment Plan, or actual documented costs, whichever is less.

1.5.2.3.2 All equipment rental rates and costs are subject to City's right to audit when submitted as part of Equipment Plan and/or at any time during the Project.

1.5.2.4 The aggregate rentals chargeable for each piece of Contractor owned tools or equipment must not exceed 50% of the fair market value of such equipment at the time of its commitment to the Work. The original purchase price and date of purchase of the equipment will be documented with a copy of the purchase invoice for the piece of equipment. Such aggregate limitations will apply and no further rentals will be charged even if a piece of equipment is taken off the job and is later replaced by a similar piece of equipment. For purposes of computing the aggregate rentals applicable to aggregate rental limitations, rental charges for similar pieces of equipment will be combined if the pieces of equipment were not used at the same time.

1.5.2.5 Fair market value for used material and equipment as referred to in the Agreement Documents will mean the estimated price a reasonable purchaser would pay to purchase the used material or equipment at the time it was initially needed for the job. Note: This is usually lower than the price a reasonable purchaser would pay for similar new construction material or construction equipment.

1.5.2.6 All losses resulting from lost, damaged or stolen tools and equipment will be the sole responsibility of Contractor, and not City, and the cost of such losses will not be reimbursable under the Agreement.

1.5.2.7 Contractor will be required to maintain a detailed equipment inventory of all job-owned equipment (either purchased and charged to job cost or job-owned through aggregate rentals) and such inventory must be submitted to City each month. For each piece of equipment, such inventory should contain at a minimum (1) original purchase price or acquisition cost (2) acquisition date (3) approved Fair Market Value at the time the piece of equipment was first used on the job and (4) final disposition.

1.5.2.8 All costs incurred for minor maintenance and repairs will be reimbursed at actual cost. Such costs include routine and preventative maintenance, minor repairs and other incidental costs. Repairs and/or replacement of a capital nature are considered to be covered by the rental rates. Major repairs and overhauls are not considered routine and ordinary; consequently such costs are not reimbursable and are intended to be covered by the rental rates.

1.5.3 Costs of removal of debris from the Site.

1.5.4 Costs of document reproductions, facsimile transmissions and long-distance telephone calls, postage and parcel delivery charges, telephone service at the site and reasonable petty cash expenses of the site office.

1.5.5 That portion of the reasonable expenses of Contractor's personnel incurred while traveling in discharge of duties connected with the Work.

1.5.5.1 No travel expenses will be reimbursed to Contractor's representatives unless Project related travel required them to travel to a destination more than 100 miles from the Project location. Any travel involving airfare will require advance written approval by an authorized City's representative.

1.5.6 Costs of materials and equipment suitably stored off the site at a mutually acceptable location, if approved in advance by the City.

1.5.7 Reproduction costs will be the actual costs of reproduction subject to a maximum of five cents ($.05) per square foot for prints and a maximum of five cents ($.05) per 8 ½ by 11-inch page for offset print or photo copied agreement documents, specifications, etc. Telephone costs will be the actual costs paid to the third party telephone company for the field office telephone.

1.6 Miscellaneous Costs

1.6.1 That portion of insurance and bond premiums that can be directly attributed to the Agreement. The City will reimburse Contractor for contractually required bond at time of first pay application for GMP and Cost-Based Agreements upon receipt of proof of payment from the Contractor. If the Contractor completes Work for less than the Agreement Price, Contractor must credit the City a pro- rated amount for the unused portion of the bond payment

1.6.1.1 Contractor's actual cost for insurance will be considered to be included within the Maximum limit for General Conditions Costs. All premiums for any insurance and bonds required for the Project must reflect the net actual costs to Contractor after taking into consideration cost adjustments due to experience modifiers, premium discounts, policy dividends, retrospective rating plan premium adjustments, assigned risk pool rebates, refunds, etc.

1.6.1.2 The amount to be reimbursed to Contractor for all contractually required insurance will be actual costs not to exceed a total of 2% of the Agreement Value, unless Contractor establishes to City's satisfaction that the actual cost is higher and City agrees to such actual higher cost in writing. If Contractor's cost of contractually required insurance is greater than the amount agreed to be reimbursed per this Agreement Provision, the difference will be considered to be covered by the Contractor's Fee. The City will reimburse Contractor for contractually required insurance on a monthly basis for GMP and Cost-Based Agreements. If Contractor can demonstrate substantial savings by paying for all insurance in advance, the City may agree to reimburse all insurance costs at time of first pay application for GMP and Cost-Based Agreements with proof of payment from Contractor.

1.6.2 Sales, use or similar taxes imposed by a governmental authority that are related to the Work.

1.6.3 Fees and assessments for the building permit and for other permits, licenses and inspections for which Contractor is required by the Agreement Documents to pay.

1.6.4 Fees of laboratories for tests required by the Agreement Documents, except those related to defective or nonconforming Work and which do not fall within the scope of ¶ 1.7.3 below.

1.6.5 Royalties and license fees paid for the use of a particular design, process or product required by the Agreement Documents; the cost of defending suites or claims for infringement of patent rights arising from such requirement of the Agreement Documents; and payments made in accordance with legal judgments against Contractor resulting from such suites or claims and payments of settlements made with City's consent. However, such costs of legal defenses, judgments and settlements must not be included in the calculation of the Contractor's Fee or subject to the Guaranteed Maximum Price.

1.6.6 Data processing costs related to the Work. However, any such data processing costs will be limited to the cost of personal computer hardware used at the field office in the normal day to day administration, management and control of the Project. The aggregate charges for any such hardware must not exceed the Fair Market Value of the hardware at the time it was brought to the field office. If the total charges for any particular piece of hardware reach an amount equal to the Fair Market Value, that particular piece of hardware must be turned over to City whenever it is no longer needed for the Project. If Contractor elects to keep the particular piece of hardware, the job costs must be credited with a mutually agreeable amount which will represent the Fair Market Value of the particular piece of hardware at the time it was no longer needed for the job. Software or other costs associated with the use of computer programs will not be considered to be a reimbursable cost and will be considered to be covered by the Contractor's Fee.

1.6.7 Deposits lost for causes other than Contractor's negligence or failure to fulfill a specific responsibility to City as set forth in the Agreement Documents.

1.6.8 Legal, mediation and arbitration costs, including attorneys' fees, other than those arising from disputes between City and Contractor, reasonably incurred by Contractor in the performance of the Work and with City's prior written approval; which approval will not be unreasonably withheld.

1.6.9 Expenses incurred in accordance with Contractor's standard personnel policy for relocation and temporary living allowances of personnel required for the Work, if pre-approved by City in writing. If City authorizes the reimbursement of relocation costs, the reimbursable relocation expenses will be limited to a maximum of $50,000 per person. Any relocation cost incurred by Contractor in excess of the amount reimbursed by City will be considered to be covered by the Contractor's Fee.

1.7 Other Costs and Emergencies

1.7.1 Other costs incurred in the performance of the Work if and to the extent approved in advance in writing by City.

1.7.2 Costs due to emergencies incurred in taking action to prevent threatened damage, injury or

loss in case of an emergency affecting the safety of persons and property.

1.7.3 Costs of repairing or correcting damaged or nonconforming Work executed by Contractor, Subcontractors or Suppliers, provided that such damaged or nonconforming Work was not caused by negligence or failure to fulfill a specific responsibility of Contractor and only to the extent that the cost of repair or correction is not recoverable by Contractor from insurance, sureties, Subcontractors or Suppliers.

1.8 Related Party Transactions

1.8.1 The term "related party" will mean a parent, subsidiary, affiliate or other entity having common ownership or management with Contractor; any entity in which any stockholder in, or management employee of, Contractor owns any interest in excess of ten percent in the aggregate; or any person or entity which has the right to control the business or affairs of Contractor. The term "related party" includes any member of the immediate family of any person identified above.

1.8.2 If any of the costs to be reimbursed arise from a transaction between Contractor and a related party, Contractor must notify City in writing of the specific nature of the contemplated transaction, including the identity of the related party and the anticipated cost to be incurred, before any such transaction is consummated or cost incurred. If City, after such notification, authorizes in writing the proposed transaction, then the cost incurred will be included as a cost to be reimbursed, and Contractor must procure the Work, equipment, goods or service from the related party, as a Subcontractor. If City fails to authorize the transaction, Contractor must procure the Work, equipment, goods or service from some person or entity other than a related party.

SECTION 2 – COSTS NOT TO BE REIMBURSED

2.1 The Cost of Work must not include:

2.1.1 Salaries and other compensation of Contractor's personnel stationed at Contractor's principal office or offices other than the site office, except as specifically provided in Subparagraphs 1.2.2 and 1.2.3.

2.1.2 Expenses of Contractors' principal office and offices other than the site office.

2.1.3 Overhead and general expenses, except as may be expressly included in Section 1.

2.1.3.1 Costs of Contractor's home office computer services or other outside computer processing services will be considered overhead and general expense. Accordingly, Contractor should not plan to perform any such computer related services or alternatives at the field office when such services or functions can be performed at Contractor's home or branch offices, or other outside service locations.

2.1.4 Contractor's capital expenses, including interest on Contractor's capital employed for the Work.

2.1.5 Rental costs of machinery and equipment, except as specifically provided in subparagraph 1.5.2.

2.1.6 Except as provided in Subparagraph 1.7.3 of the Agreement, costs due to the negligence or failure to fulfill a specific responsibility of Contractor, Subcontractors and Suppliers or anyone directly or indirectly employed by any of them or for whose acts of them may be liable.

2.1.7 Any cost not specifically and expressly described in Section 1.

2.1.8 Costs, other than costs included in Change Orders approved by City that would cause the GMP to be exceeded.

SECTION 3 – DISCOUNTS, REBATES, REFUNDS AND SAVINGS

3.1 Cash discounts obtained on payments made by Contractor will accrue to City if (1) before making the payment, Contractor included them in an Application for Payment and received payment therefore from City, or (2) City has deposited funds with Contractor with which to make payments; otherwise, cash discounts will accrue to Contractor. Trade discounts, rebates, refunds and amounts received from sales or surplus materials and equipment will accrue to City, and Contractor must make provisions so that they can be secured.

3.1.1 Cost of the Work will be credited with all insurance policy discounts, performance and payment bond rebates or refunds, refunds or return premiums from any Subcontractor default insurance, refunds or rebates from any Contractor controlled insurance programs applicable to the Project, merchandise rebates of any nature, refunds of any nature, insurance dividends; and a portion of any volume rebates or free material credits earned with purchase of material or other goods and services charged to the job.

3.1.2 "Cash" discounts which may accrue to Contractor will be limited to a maximum of 1.5% of invoice cost. Any portion of "Cash" discounts greater than 1.5% will automatically accrue to City if Contractor is eligible to take advantage of the discounts.

3.2 Amounts that accrue to City in accordance with the provisions of Paragraph 3.1 will be credited to City as a deduction from the Cost of the Work.

3.3 Any and all savings on the GMP, or any separately guaranteed items comprising the GMP, will belong to City, subject to any express right in the Agreement for Contractor to share in savings. Savings are subject to City's right to audit, and may be audited separately.

SECTION 4 – GENERAL CONDITIONS COSTS

4.1 General Conditions Costs may include, but are not limited to, the following types of costs incurred by Contractor during construction of the Work to the extent they are reimbursable Costs of the Work as delineated above: payroll costs for Work conducted at the site, payroll costs for the superintendent and full-time general foremen, payroll costs for management personnel resident and working on the site workers not included as direct labor costs engaged in support (e.g. loading/unloading, clean-up, etc.), administrative office personnel, costs of offices and temporary facilities including office materials, office supplies, office equipment, minor expenses, utilities, fuel, sanitary facilities and telephone services at the site, costs of liability insurance premiums not included in labor burdens for direct labor

costs, costs of bond premiums, costs of consultants not in the direct employ of Contractor or Subcontractors, fees for permits and licenses.

4.2 General Conditions Costs may be paid on a percentage of the Agreement Price or on a lump/stipulate sum basis as set forth in the Agreement. All costs included in the General Conditions Costs will not be separately invoiced to or paid by City.

4.3 The total amount of General Conditions Costs for the Work may be divided by the number of days allowed for performance of the Work, to determine a fixed daily rate for General Conditions Costs that may be used in computing the General Conditions Costs allocated to any period of time, or for any adjustments in the General Conditions Costs agreed to in writing by City.

LANDSCAPE ESTABLISHMENT PERIOD

Section 1 – Description and General

Contractor is in direct control of work performed under the Landscape Establishment Period. If work is subcontracted, a representative of the Contractor will be present at the site of the work for all hours that the subcontractor works. Subcontracting of Landscape Establishment work will be permitted for weed eradication with herbicides, because of special licensing. A licensed temporary service may be used to supply labor to Contractor if Contractor has received approval from City Representatives. Contractor will submit the required subcontract documentation.

Contractor must provide adequate personnel to accomplish the required maintenance of the plant materials at intervals acceptable to City Representatives.

If not healthy at the end of the maintenance period, the maintenance must be continued until the plant material is approved by City.

1.1 Time and Schedule

Unless otherwise expressly agreed to in writing by City, the Landscape Establishment Period will be per General Conditions Section 6.5.4.

1.2 Planted Stock and Seeding Establishment

1.2.1 Tree planting and staking must be per City of Chandler Standard Detail C-801.

1.2.2 All trees will stand erect on their own without stakes when brought to this site. If the tree cannot stand on its own when nursery stakes are removed, the tree will be removed and replaced.

1.3 Pre-Emergent Herbicide and Weed Control

1.3.1 Contractor will provide three applications of an approved pre-emergent herbicide on all unpaved areas of the project, as directed by City Representatives, to control weed growth in all areas of the project. The number of applications may be increased as directed by the City Representative, and at no additional cost to City, if the City Representative deems additional applications are required to control weed growth.

1.3.2 Application sequence will be approved in advance by City. The first application of pre-emergent will be completed prior to the application of Decomposed Granite and will be included with the cost of the Decomposed Granite as specified and part of the Construction Phase portion of work. The second application of pre-emergent will be completed after installation of the Decomposed Granit and no later than half-way through the Landscape Establishment Period. The third and final application of pre-emergent will be applied 15 days prior to completion of the Landscape Establishment portion of the project. The second and third pre-emergent applications will be included with the cost of Landscape Establishment. Watering will be completed in accordance with the manufacturer's recommendations, as included and as related to each application.

1.3.3 The pre-emergent herbicide will be applied in accordance with the Technical Specifications and the recommendations of the pre-emergent herbicide manufacturer, as approved by City Representatives.

1.3.4 The control of weeds will be accomplished by the use of herbicides. Manual removal of weeds will be required, after herbicides have taken affect.

1.3.5 Contractor is responsible for the removal and disposal of all trash and debris that during the Landscape Establishment Period. Contractor will keep the project in a neat and orderly manner during the duration of the Landscape Establishment Period.

1.4 Water

The water used during Landscape Establishment to properly maintain the plant material will be furnished by City, at designated sources from within the project limits, at no charge to Contractor. Contractor will be responsible for all equipment, materials and labor necessary to load, transport and unload water for watering purposes.

1.5 Plant Material Replacements

The plant material replacement will be considered as included in the work for Landscape Establishment, and will be made at no charge to the City.

1.5.1 Shrub and Plant Replacement - During the second half of the Landscaping Establishment period, Contractor will provide, where required, plant replacements as follows:

Original Size	Replacement Size
1 gallon	5 gallon
5 gallon	15 gallon
15 gallon	24-inch box
36-inch box	48-inch box

1.5.2 Tree Replacement – During the second half of the Landscape Establishment Period, Contractor will provide plant material replacements for existing plants that die as follows:

Existing Plant Material Sizes	Replacement Size
Trees:	
2-inch Caliper	24-inch box
4-inch Caliper	36-inch box
6-inch Caliper and greater	54-inch box
Shrubs:	
All Existing Shrubs	15 gallon

1.6 Measurement and Payment

See Technical Specifications for Measurement Payment provisions.

EXHIBIT C

TECHNICAL SPECIFICATIONS

CITY OF CHANDLER

PUBLIC WORKS AND UTILITIES DEPARTMENT

LOOP 101 AND 202 FREEWAY 66-INCH REDUNDANT SEWER PROJECT

PROJECT NO. WW2402.401

AGENCY REVIEW

Technical Specifications

MAY 2025

MAYOR
KEVIN HARTKE

VICE MAYOR
CHRISTINE ELLIS

CITY COUNCIL

Council Member Angel Encinas
Council Member Od Harris
Council Member Jane Poston
Council Member Matt Orlando
Council Member Jennifer Hawkins

CITY MANAGER
JOSHUA WRIGHT

PUBLIC WORKS & UTILTIES DIRECTOR
JOHN KNUDSON, PE

TECHNICAL SPECIFICATIONS

TABLE OF CONTENTS (DIVISIONS 1-15)
FOR
CITY OF CHANDLER
LOOP 101 AND 202 FREEWAY 66-INCH REDUNDANT SEWER PROJECT
CITY PROJECT NO. WW2402.401
AGENCY REVIEW

Registered Professional Engineer (Civil)
CERTIFICATE NO.
35600
PHILIP JAMES
NOONAN
Date Signed 5/26/25
ARIZONA U.S.A.

Civil

DIVISION 1 GENERAL REQUIREMENTS

01110	SUMMARY OF WORK
01140	WORK RESTRICTIONS
01311	PROJECT COORDINATION
01312	PROGRESS MEETINGS
01323	CONSTRUCTION PHOTOGRAPHS
01330	SUBMITTALS
01332	SHOP DRAWING PROCEDURES
01412	STORMWATER POLLUTION PREVENTION PLAN AND PERMIT
01413	CONTRACTOR'S HAZARDOUS MATERIALS MANAGEMENT PROGRAM
01414	EARTHMOVING AND DUST CONTROL
01415	CONFINED SPACE ENTRY PLAN
01416	SPECIAL INSPECTIONS
01420	REFERENCES
01451	TESTING LABORATORY SERVICES FURNISHED BY OWNER
01452	TESTING LABORATORY SERVICES FURNISHED BY CONTRACTOR
01453	TESTING OF HYDRAULIC STRUCTURES
01570	TEMPORARY CONTROLS

DIVISION 1 GENERAL REQUIREMENTS (CONT'D)

01722 FIELD ENGINEERING
01723 CUTTING AND PATCHING
01740 CLEANING
01782 RECORD DOCUMENTS

DIVISION 2 SITEWORK

02145 DIVERSION OF WATER OR SEWAGE FLOW AND DEWATERING
02146 SEWER PIPE AND SEWER STRUCTURE CLEANING
02147 REMOTE CCTV INSPECTION OF EXISTING AND REHABILITATED SEWERS
02148 CIPP LINING OF EXISTING SEWERS
02220 DEMOLITIONS
02230 CLEARING
02315 STRUCTURAL EXCAVATION AND BACKFILL
02532 POLYMER CONCRETE MANHOLE INSERT
02720 FIBER REINFORCED POLYMER

DIVISION 3 CONCRETE

03100 CONCRETE FORMWORK
03200 CONCRETE REINFORCEMENT
03251 CONCRETE JOINTS
03252 ANCHORAGE IN CONCRETE
03300 CAST-IN-PLACE CONCRETE
03600 GROUT
03601 CELLULAR LOW DENSITY GROUT
03930 CONCRETE REPAIR AND REHABILITATION

DIVISION 5 METALS

05581 FLOOR ACCESS HATCH COVERS

DIVISION 6 WOOD AND PLASTICS

06611 FIBERGLASS REINFORCED PLASTIC GRATINGS AND SUPPORT FRAMING MEMBERS
06614 FIBERGLASS REINFORCED PLASTIC STOP LOGS

DIVISION 9 FINISHES

09910 SPECIAL FINISHES

DIVISION 13 SPECIAL CONSTRUCTION

13210 POLYMER CONCRETE STRUCTURES
13220 PVC LINER

DIVISION 15 MECHANICAL

15050 PIPING SYSTEMS
15051 BURIED PIPING INSTALLATION
15106 THERMOPLASTIC PIPE
15108.1 CENTRIFUGALLY CAST, FIBERGLASS-REINFORCED POLYMER MORTAR PIPE

+ + END OF TABLE OF CONTENTS + +

SECTION 01110

SUMMARY OF WORK

PART 1 - GENERAL

1.1 LOCATION AND DESCRIPTION OF WORK

A. The Work is located near the Loop 101-202 freeway interchange in Chandler, Arizona. The scope of the project is to design and construct a redundant 66-inch diameter gravity sewer line that crosses the Loop 101 and 202 freeway and rehabilitate existing sewer line segments consisting of 48-inch diameter, 30-inch diameter and 66-inch diameter using cured-in-place pipe (CIPP) liner as shown per the Drawings (i.e. plans). In addition, rehabilitation of the Pecos Diversion Structure is required along with a new overflow sewer line as shown per the Drawings.

B. The Scope of Work to be performed includes, but are not limited to the following, and reflect what is shown in the Drawings.
   1. Coordinate with ADOT to obtain encroachment permits as required.
   2. Remove existing 48-inch existing manhole on the existing west 48-inch sewer line to construct new cast-in-place and polymer concrete pre-cast junction structures to divert all the west flows to the existing and new redundant 66-inch sewer line.
   3. Abandon in place by grout filling the existing junction chamber east of the 66-inch sewer.
   4. Abandon a portion of an existing 48-inch sewer line by grout filling the pipe and plugging the ends as shown per the Drawings.
   5. Rehabilitation and replacement of existing manholes.
   6. Installation of new manholes and manhole inserts.
   7. Installation of stop log mechanism, cranes and gratings as shown per the Drawings.
   8. Remove east 48-inch sewer line as shown per the Drawings for construction and add new pre-cast structure to divert east flows to existing and new redundant 66-inch sewer line.
   9. Install approximately new 66-inch diameter redundant gravity sewer line of which a portion will be routed within a steel casing as it crosses the Loop 202 freeway.
   10. CIPP line existing 30-inch diameter sewer crossing Loop 101 freeway.
   11. CIPP line existing 48-inch diameter sewer north of Loop 202 freeway.
   12. CIPP line existing 66-inch diameter sewer line north, south and crossing Loop 202 freeway.
   13. Connecting new portions of sewer to the existing sewer system as shown on the Drawings.

14. Bypassing sewage flows for the completion of the work as shown on the Drawings.

1.2 CONTRACT

A. The Work shall be constructed under one prime contract.

1.3 SEQUENCE AND PROGRESS OF WORK

A. CONTRACTOR'S construction schedule may use a different sequence from that shown or specified, if techniques and methods known will result in cost and time savings to the OWNER, still achieve the required objective and maintain the same or greater level of treatment. The ENGINEER'S determination on the acceptability of any alternative sequence from that shown or specified shall be final.

1.4 CONTRACTOR'S USE OF PREMISES

A. CONTRACTOR shall coordinate use of the premises, for his storage and the operations of his workmen, with OWNER, ENGINEER and utility service companies.

B. The full use of the premises for storage, the operations of workmen and for all other construction activities will not be available to CONTRACTOR. Must operate entirely within the space allowed to him.

C. CONTRACTOR shall be solely responsibility for obtaining and paying all costs in connection with any additional work area, storage sites, access to the site, or temporary right-of-way which may be required for proper completion of the Work.

D. It shall be understood that responsibility for protection and safe-keeping of equipment and materials on or near the site will be entirely that of CONTRACTOR and that no claim shall be made against the OWNER or his authorized representatives by reason of any act. It shall be further understood that should any occasion arise necessitating access to the sites occupied by these stored materials or equipment, the ENGINEER shall direct CONTRACTOR owning or responsible for the stored materials and equipment to immediately move the same.

E. CONTRACTOR shall be required to share use of the premises with other contractors whose services the OWNER has obtained or will obtain for construction of other facilities on the site.

1.5 EASEMENTS AND RIGHT-OF-WAY

A. Confine construction operations within the limits indicated on the Drawings. Use due care in placing construction tools, equipment, excavated materials, and pipeline

materials and supplies in order to avoid damage to property and interference with traffic, SRP, or ADOT. Do not enter any private property outside the designated construction easement boundaries without written permission from the ENGINEER and the Owner of the property. Any temporary construction easement for a private property or Rights-Of-Way owned by others than the OWNER, which CONTRACTOR wishes to utilize during the performance of the Work, shall be obtained by the CONTRACTOR.

B. An encroachment permit must be obtained for any activities within the state right-of-way, including highways or ADOT easements. The CONTRACTOR shall obtain the necessary encroachment permit approval from ADOT prior to initiating any construction operations.

1.6 NOTICES TO OWNERS AND AUTHORITIES OF PROPERTIES ADJACENT TO THE WORK

A. Notify OWNER of adjacent properties and utilities when prosecution of the Work may affect them.

B. When it is necessary to temporarily obstruct access to property, or when any utility service connection must be interrupted, give notices sufficiently in advance to enable the affected persons to provide for their needs. Conform notices to any applicable local ordinance and, whether delivered orally or in writing, include appropriate information concerning the interruption and instructions on how to limit inconvenience caused thereby.

C. Utilities and other concerned agencies shall be notified at least forty-eight (48) hours prior to cutting or closing streets or other traffic areas or excavating near underground utilities or pole lines.

PART 2 - PRODUCTS (NOT USED)

PART 3 - EXECUTION (NOT USED)

+ + END OF SECTION + +

SECTION 01140

WORK RESTRICTIONS

PART 1 - GENERAL

1.1 USE OF PREMISES

A. Limit use of premises to Work in areas indicated. Do not disturb portions of site beyond areas in which Work is indicated.
   1. Limits: Confine construction operations to designated areas as determined by OWNER, ADOT, SRP and/or as shown on the drawings. Confine storage of materials and support facilities to designated areas as shown on the drawings or as determined by the OWNER. Do not enter areas of the site where no Work is to be conducted.
   2. Driveways and Entrances: At all times, keep driveways and entrances serving premises clear and available to OWNER, OWNER'S employees, and emergency vehicles. Do not use these areas for parking or storage of materials.
      a. Schedule deliveries to minimize use of driveways and entrances.
      b. Schedule deliveries to minimize space and time requirements for on-site storage of materials and equipment.

B. Promptly repair damage to premises caused by construction operations. Upon completion of the Work, restore premises to original condition.

PART 2 - PRODUCTS (NOT USED)

PART 3 - EXECUTION (NOT USED)

+ + END OF SECTION + +

SECTION 01311

PROJECT COORDINATION

PART 1 - GENERAL

1.1 DESCRIPTION

A. As more fully set forth in of the General Conditions, CONTRACTOR shall be solely responsible for coordination of all of the Work. The CONTRACTOR shall supervise, direct and cooperate fully with all subcontractors, manufacturers, fabricators, suppliers, distributors, installers, testing agencies and all others whose services, materials, or equipment are required to ensure completion of the Work within the Contract Time.

B. As more fully set forth in of the General Conditions, the CONTRACTOR shall cooperate with and coordinate the Work with the work of any other contractor, utility service companies or OWNER'S employees performing work at the site.

C. The CONTRACTOR shall not be responsible for damage done by contractors not under CONTRACTOR’S jurisdiction and shall not be liable for any such loss or damage, unless it is through the negligence of CONTRACTOR.

D. The CONTRACTOR shall coordinate the Work with the work of others to assure compliance with schedules.

E. The CONTRACTOR shall attend and participate in all project coordination or progress meetings and report on the progress of all Work and compliance with schedules.

F. It is the duty of the CONTRACTOR to determine that all necessary permits have been obtained. The CONTRACTOR, at his own expense, obtain, maintain and close all the required permits which have not been furnished. The CONTRACTOR to have all copies of permits onsite for OWNER review.

PART 2 - PRODUCTS (NOT USED)

PART 3 - EXECUTION (NOT USED)

+ + END OF SECTION + +

SECTION 01312

PROGRESS MEETINGS

PART 1 - GENERAL

1.1 DESCRIPTION

A. Date and Time:
   1. Regular Meetings: Weekly on a day and time agreeable to OWNER, ENGINEER and CONTRACTOR.
   2. Other Meetings: As needed and/or required in other specific specification sections.

B. Place: CONTRACTOR'S field office at the project site, or other mutually agreed upon location.

C. The ENGINEER shall conduct weekly progress meetings, the ENGINEER shall record and distribute minutes of the meeting to all attendees and others as requested. At a minimum, the agenda will include: Requests for Information (RFI) and submittal status, past week's progress and a 3-week look-ahead schedule to include upcoming inspections, current issues, long lead items, critical issues and the next scheduled meeting date.

D. CONTRACTOR shall provide data required and be prepared to discuss all items on agenda.

1.2 MINIMUM ATTENDANCE

A. CONTRACTOR:
   1. When needed for the discussion of a particular agenda item, CONTRACTOR shall require representatives of subcontractors or suppliers to attend a meeting.

B. ENGINEER:
   1. Construction management staff shall attend weekly meetings.
   2. When needed for the discussion of a particular agenda item, ENGINEER shall require representative of sub-consultant to attend a meeting.

C. Others, as appropriate.

D. Representatives present for each party shall be authorized to act on their behalf.

1.3 AGENDA

A. Agenda will include, but will not necessarily be limited to, the following:
   1. Transcript of previous meeting
   2. Progress since last meeting;
      a. CONTRACTOR'S three week schedule. Schedule shall show intended work three weeks ahead as well as completed work since the last progress meeting.
      b. Subcontractors' three week schedule (may be combined with CONTRACTOR'S schedule).
   3. Completion status.
   4. Planned progress for next period including a 3-week look-ahead schedule to include upcoming inspections.
   5. Document and track to correction and closure any problems, conflicts, issues, and observations that are voiced by anyone of the project team.
   6. Status of Shop Drawings, RFI and RFAs.
   7. Change Orders.
   8. Pay Requests.
   9. Quality Standards and Control.
   10. Schedules, updated Project Schedules, including off-site fabrication and delivery schedules; corrective measures, if required.
   11. Coordination between parties.
   12. Permits.
   13. Safety concerns.
   14. Construction Photographs.
   15. Record Drawings.
   16. Warranty Requests.
   17. Punch List Status.
   18. Other business.
   19. Next meeting date.

PART 2 - PRODUCTS (NOT USED)

PART 3 - EXECUTION (NOT USED)

+ + END OF SECTION + +

SECTION 01323

CONSTRUCTION PHOTOGRAPHS

PART 1 - GENERAL

1.1 DESCRIPTION

A. CONTRACTOR shall retain a professional photographer or an acceptable person, as determined by the ENGINEER, to perform the services specified below.

B. Obtain ENGINEER'S approval of the photographer selected prior to taking first photographs. Submit qualifications and experience record of photographer to ENGINEER.

1.2 PHOTOGRAPHS

A. The minimum number of color digital photographs required will be 100 per month.

B. Take a minimum of 200 color digital photographs of the completed or substantially completed Work at Project Completion. These photographs shall be submitted with the Final Application for Payment. These photographs are not part of the photographs required under Paragraph 1.2.A., above.

C. The CONTRACTOR shall take color digital photographs daily of all underground work in progress. Photographs shall be taken in such a way to include an area or directional landmark. A minimum of twenty five overall general project photographs depicting the overall project activities shall be taken weekly. A photograph log shall be maintained throughout the project with the following information for each photo: photograph number, a brief description, date, and location or station of pipeline. The CONTRACTOR shall submit a plan that illustrates how the photograph log will be organized for approval by the OWNER.

D. Color digital photographs shall be taken and downloaded weekly. Photos shall be grouped into folders and the folders shall be named with the date they were taken and a brief description of the photo subject. For example: ‘2016-01-31 Roadway Demolition.’

E. ENGINEER will approve the views to be taken and select the time at which they will be taken. All photographs need to be viewable (digital), otherwise they will not be allowed off-site (refer to paragraph 1.4.A). Views will vary depending on the Progress Schedule.

F. A minimum of 20 color digital photographs shall be submitted with the pay application during each pay period; see Section 1.3 below.

1.3 PHOTOGRAPH FORMAT

A. Furnish all photographs in digital format.

B. Provide all digital photographs on USB drive. The file format shall be "jpg". The digital photographs shall be provided in addition to the standard photographs required under Paragraph 1.3.B, above. Provide a file for all required under paragraphs 1.2.A and B.

C. Provide interior and exterior photographs of each buried structure prior to burial. Provide a minimum of four internal views and four external views of each structure. One view shall be provided of each wall, detail, floor and top of structure.

D. Place the following information in the digital file name for each photograph:
   1. Date photograph was taken.
   2. Description of view shown in photograph.
   3. Station Number

1.4 PRE-CONSTRUCTION PHOTOGRAPHS

A. General
   1. It is the CONTRACTOR's responsibility to provide 150 pre-construction photographs and video, so as to resolve any disputes which may arise regarding the considerations prior to and subsequent to construction.
   2. If a dispute arises where no Pre-construction photographs were provided, the disputed area shall be restored to the extent directed by the ENGINEER and to the complete satisfaction of the ENGINEER.
   3. Prior to the start of any construction activities the CONTRACTOR shall furnish (2) sets of color pre-construction photographs and video for approval; one for the ENGINEER and one for the OWNER.
   4. Pre-construction photographs taken by CONTRACTOR will not be considered as part of the required number of construction photographs required in Paragraph 1.2, above.
   5. A high quality video of the site in digital format shall be made and submitted by the CONTRACTOR.
   6. Drone photos are required per the contract general requirements.

PART 2 - PRODUCTS (NOT USED)

PART 3 - EXECUTION (NOT USED)

+ + END OF SECTION + +

SECTION 01330

SUBMITTALS

PART 1 - GENERAL

1.1 DESCRIPTION

A. Submittal of documents described in the General Conditions and hereinafter are required prior to, during and at the end of the construction period. The submittals shall conform to the requirements described in this Section and all referenced Sections or Articles.

B. The CONTRACTOR will set up and maintain a project portal for use as a centralized location for storing and conveying project information and for team communication. The portal shall be utilized by the OWNER, ENGINEER and CONTRACTOR for document tracking. The CONTRACTOR shall submit electronic copies of all submittals by uploading the electronic files to the portal.

1.2 GENERAL SUBMITTAL REQUIREMENTS

A. A submittal shall be made for each complete system. Piecemeal submittals will not be accepted.

B. Submittals requiring ENGINEER review only will be processed within 21 calendar days after receipt from CONTRACTOR. Submittals requiring ENGINEER and OWNER review will be processed within 30 calendar days after receipt from CONTRACTOR.

C. CONTRACTOR shall maintain a file of all approved submittal documents at the work site.

D. CONTRACTOR shall show his executed internal review and approval marking. Submittals which are received from sources other than through CONTRACTOR'S Office or which have not undergone CONTRACTOR review will be returned "Rejected".

1.3 PROCEDURE

A. Submittals Prior to Beginning the Work: Refer to the General Conditions of the Contract Documents.

B. Submittals During Construction: During progress of the construction, provide the following submittals in a timely manner to prevent any delay in the Work schedule:

1. Shop Drawings, Product Data and Samples: Submit Shop Drawings, product data and samples in accordance with Section 01332, Shop Drawing Procedures, and as required in various Sections of the Contract Documents.
2. A copy of this specification section, with addendum updates included, and all referenced and applicable sections, with addendum updates included, with each paragraph check-marked to indicate specification compliance or marked to indicate requested deviations from specification requirements. Check marks (✓) shall denote full compliance with a paragraph as a whole. If deviations from the specifications are indicated, and therefore requested by the CONTRACTOR, each deviation shall be underlined and denoted by a number in the margin to the right of the identified paragraph, referenced to a detailed written explanation of the reasons for requesting the deviation. The ENGINEER shall be the final authority for determining acceptability of requested deviations. The CONTRACTOR shall furnish equipment and/or services as specified if an exception and/or deviation is rejected. The remaining portions of the paragraph not underlined will signify compliance on the part of the CONTRACTOR with the specifications. Failure to include a copy of the marked-up specification sections, along with justification(s) for any requested deviations to the specification requirements, with the submittal shall be sufficient cause for rejection of the entire submittal with no further consideration.
3. Request for Information: Submit a Request for Information when any of the following are required: an interpretation of the Specifications; additional details; information not shown on the Drawings or in the Specifications; or clarification of discrepancies, omissions, or errors is determined. Submit one electronic PDF format copy to the ENGINEER for response. Once the RFI is commented on by the ENGINEER, an electronic PDF format copy will be forwarded to the OWNER.
4. Change Orders: A proposal for a Change Order may be submitted by CONTRACTOR in accordance with the General Conditions. The Change Order Proposal must be in writing and must include sufficient information to assess the need for a change in the Work, the Contract time or the Contract amount. Any Work done by CONTRACTOR prior to execution of a Change Order is entirely at his own risk.
5. CONTRACTOR'S Daily Report: Submit electronic copies of CONTRACTOR'S Daily Report. CONTRACTOR and each subcontractor shall prepare and submit a daily report. The report shall contain, as a minimum, information on the location and description of the Work being performed, size, quantity and description of materials and equipment installed or delivered, coordination or scheduling concerns, requests for clarifications, and any discrepancies noted in the Contract Documents or on the as-built conditions. The report shall also contain CONTRACTOR'S daily workforce count by craft, general weather conditions, any Work performed other than during established working hours, and any other pertinent items relative to the Work, and as

required by ENGINEER. The report is due at the ENGINEER'S office by 9:00 a.m. on the following Work day and shall be signed by a responsible member of CONTRACTOR'S staff.

6. Submittal Schedule: Submit an updated Shop Drawing, Product Data and Sample Submittal Schedule with each Progress Payment Request.
7. Construction Photographs: Submit Construction Photographs with each month's Progress Payment Request as specified in Section 01323, Construction Photographs.
8. Operation and Maintenance Manuals and Lesson Plans: Submit Equipment Operation and Maintenance Manuals for approval, by the ENGINEER, within 30 days after approval of Equipment Shop Drawing. Submit Equipment Training Lesson Plans for approval, by the ENGINEER, 60 days prior to commencement of training. Submit Operation and Maintenance Data and Lesson Plans in accordance with Section 01781, Operation and Maintenance Data and Section 01821, Instruction of Operations and Maintenance Personnel.

C. Submittal at Substantial Completion: Submit all Operations and Maintenance Data for each item of Work commissioned into operation.

D. Submittal At Project Closeout: With a written Notice of Completion, submit the following items in the proper form as a condition of Final Acceptance of the Work:
   1. Project Record Documents: Submit in accordance with Section 01782, Record Documents.
   2. Guarantees, Warranties and Bonds: Submit as required in the General Conditions and listed in various Sections of the Specifications.
   3. Survey notes.
   4. Construction photographs of all completed Work, in accordance with Section 01323, Construction Photographs.

PART 2 - PRODUCTS (NOT USED)

PART 3 - EXECUTION (NOT USED)

(The remainder of this page left intentionally blank)

APPENDIX A

Submittal Listing: The following is a list of anticipated submittals for the project: This list does not alleviate Contractor from obligations of requirements of each individual Technical Specifications.

No.	Description	Specification
1.	Shop Drawing Schedule	General Conditions
2.	Shop Drawing Procedures	01332
3.	Storm Water Pollution Prevention Plan	01412
4.	Confined Space Entry Plan	01415
5.	Testing Laboratory Services Furnished by Owner	01451
6.	Testing Laboratory Services Furnished by CONTRACTOR	01452
7.	Testing of Hydraulic Structures	01453
8.	Project Identification Sign	General Conditions
9.	Field Engineering	01722
10.	Cutting and Patching	01723
11.	Record Documents	01782
12.	Diversion of Sewage Flow and Dewatering	02145
13.	Sewer Pipe and Sewer Structure Cleaning	02146
14.	Remote CCTV Inspection of Existing and Rehabilitated Sewers	02147
15.	CIPP Lining of Existing Sewers	02148
16.	Demolition Methods	02220

No.	Description	Specification
17.	Clearing	02230
18.	Structural Excavation and Backfill	02315
19.	Polymer Concrete Manhole Insert	02532
20.	Fiber Reinforced Polymer	02720
21.	Samples/Concrete Formwork	03100
22.	Concrete Reinforcement	03200
23.	Concrete Joints	03251
24.	Anchorage in Concrete	03252
25.	Concrete Mix Design/Cast In Place Concrete	03300
26.	Grout Mix Design	03600
27.	Cellular Low Density Grout	03601
28.	Floor Access Hatch Covers	05581
29.	Fiberglass Reinforced Plastic Gratings and Support Framing Members	06611
30.	Fiberglass Reinforced Plastic Stop Logs	06614
31.	Special Finishes	09910
32.	Polymer Concrete Structures	13210
33.	PVC Liner	13220
34.	Piping Systems	15050
35.	Thermoplastic Pipe	15106
36.	Centrifugally Cast, Fiberglass-Reinforced Polymer Mortar Pipe (HOBAS)	15108.1

+ + END OF SECTION + +

SECTION 01332

SHOP DRAWING PROCEDURES

PART 1 - GENERAL

1.1 DESCRIPTION

A. The submittal of Shop Drawings shall conform to requirements of General Conditions and procedures described in this Section. A separate transmittal form shall be used for each specific item or class of material or equipment for which a submittal is required. Transmittal of Shop Drawings on various items using a single transmittal form shall be permitted only when the items taken together constitute a manufacturer's "package" or are so functionally related that expediency indicates review of the group or package as a whole.

B. The term "Shop Drawings" as used herein shall be understood to include detailed design calculations, fabrication and installation drawings, lists, graphs, test data, operating instructions, and other items which shall include, but are not necessarily limited to:
   1. Drawings and catalog information and cuts.
   2. Specifications, parts list, suggested spare parts lists, and equipment drawings.
   3. Wiring diagrams of systems and equipment, as required.
   4. Applicable certifications.
   5. Anchor bolt templates, mounting instructions and mounting design calculations as required.
   6. Required maintenance operations to allow all installed equipment to remain idle for a period of time not to exceed 24 months.
   7. Other technical, installation, and maintenance data as applicable.
   8. Unloading and handling methods and storage requirements.
   9. Note, highlight, and explain proposed changes to the Contract Documents.
   10. Paint submittal showing type of paint and the mils thickness of coating system used.
   11. Drawings showing CONTRACTOR field verifications illustrating all field dimensions. Field verify all dimensions and existing materials shown on the Drawings. Any modifications required shall be at CONTRACTOR'S expense.
   12. For materials or products which can contact drinking water as part of a Water Treatment Process or Water Supply System Certificate of Compliance with NSF/ANSI 61 Standard or with Arizona Administrative Code R18-4-119.
   13. Complete, detailed written preventive maintenance instructions as defined below.

C. Preventive Maintenance Instructions:
   1. The term "preventive maintenance instructions" includes all information and instructions required to keep a product or piece of equipment properly maintained according to the manufacturer's recommendation to fulfill the equipment warranty conditions and ensure the equipment or asset reaches its maximum potential life.
   2. Preventive maintenance instructions include, but are not limited to, the following:
      a. A written explanation with illustrations for each preventive maintenance task.
      b. Recommended schedule for execution of preventive maintenance tasks.
      c. Lubrication charts.
      d. Table of alternative lubricants.
      e. Trouble shooting instructions.
      f. List of required maintenance tools and equipment.
      g. Special tools.
   3. The maintenance tasks frequency are driven by calendar, run-time, or meter reading.

D. Preliminary Submittal Schedule: CONTRACTOR, within 14 days after the Notice-to-Proceed, shall prepare and submit to the ENGINEER a Preliminary Submittal Schedule. Identify on his Preliminary Submittal Schedule all of the submittal items required by the Contract Documents governing the Work.

E. Submittal Schedule: CONTRACTOR, within 21 days after the Notice-to-Proceed, shall prepare and submit to the ENGINEER a comprehensive Submittal Schedule. Identify on his Submittal Schedule all of the submittal items required by the Contract Documents governing his Work. Indicate, for each submittal item of the Submittal Schedule the following:
   1. The date by which that item will be submitted to the ENGINEER.
   2. The date by which response is required.
   3. The date by which the material or equipment must be on site in order not to delay the progress of the Work.

F. In preparing his Submittal Schedule, consider the nature and complexity of each submittal item and shall allow ample time for review, revision or correction. Submittal will normally be returned to CONTRACTOR within 21 calendar days following receipt of the submittal.

G. The ENGINEER will review CONTRACTOR'S Submittal Schedule to determine its completeness and compatibility with the Progress Schedule. A Submittal Schedule which is incompatible with the Progress Schedule or a review schedule which places extraordinary manpower demands on the ENGINEER will be sufficient reason(s) to reject the Submittal Schedule. It shall be understood that certain submittals will take

longer than 21 days to review and that these particular submittals will be identified during the review of the Submittal Schedule, by the ENGINEER to allow for very complex submittal reviews. Also, identify submittal for which he anticipates long review periods.

H. Approval of the Submittal Schedule shall be required prior to processing of the first progress payment.

1.2 PROCEDURE

A. Submit Shop Drawings to: Electronically through Procure as managed by the Contractor.

B. A letter of transmittal shall accompany each submittal. If data for more than one Section of the Specifications is submitted, a separate transmittal letter shall accompany the data submitted for each Section.

C. A copy of this specification section, with addendum updates included, and all referenced and applicable sections, with addendum updates included, with each paragraph check-marked to indicate specification compliance or marked to indicate requested deviations from specification requirements. Check marks (✓) shall denote full compliance with a paragraph as a whole. If deviations from the specifications are indicated, and therefore requested by the CONTRACTOR, each deviation shall be underlined and denoted by a number in the margin to the right of the identified paragraph, referenced to a detailed written explanation of the reasons for requesting the deviation. The ENGINEER shall be the final authority for determining acceptability of requested deviations. The CONTRACTOR shall furnish equipment and/or services as specified if an exception and/or deviation is rejected. The remaining portions of the paragraph not underlined will signify compliance on the part of the CONTRACTOR with the specifications. Failure to include a copy of the marked-up specification sections, along with justification(s) for any requested deviations to the specification requirements, with the submittal shall be sufficient cause for rejection of the entire submittal with no further consideration.

D. At the beginning of each letter of transmittal, provide a reference heading indicating the following:
   1. OWNER'S Name: City of Chandler Public Works and Utility Department
   2. Project Name: LOOP 101 AND 202 FREEWAY 66-INCH REDUNDANT SEWER PROJECT
   3. City Project No. WW 2402.401_____
   4. Transmittal No. _____
   5. Section No. _____

E. If a Shop Drawing deviates from the requirements of the Contract Documents, specifically note each variation in his letter of transmittal.

F. All Shop Drawings submitted for approval shall have a title block with complete identifying information satisfactory to ENGINEER.

G. All Shop Drawings submitted shall bear the stamp of approval and signature of CONTRACTOR as evidence that they have been reviewed and verified to the completeness of the submittal by CONTRACTOR. Submittal without this stamp of approval will not be reviewed by ENGINEER and will be returned to CONTRACTOR. CONTRACTOR'S stamp contain the following minimum information:

Project Name: _____

CONTRACTOR'S Name: _____

Date: _____

----------Reference----------

Item: _____

Specifications:

Section: _____

Page No.: _____

Para. No.: _____

Drawing No.: _____ of _____

Location: _____

Submittal No.: _____

Approved By: _____

H. In order to identify and track all submittals as separate and unique items, utilize the submittal identification numbering system as follows:

1. The Submittal Number shall be a separate and unique number correlating to each individual submittal that is required to be tracked as a separate and unique item. The Submittal Number shall be a two part, eight character, alpha/numeric number assigned by CONTRACTOR in the following manner:
   a. The first part of the Submittal Number shall consist of five characters that pertain to the applicable Specification Section number.
   b. The second part of the Submittal Number shall consist of three digits (numbers 001 to 999) to number each separate and unique submittal submitted under each Specification Section.
   c. A dash shall separate the two parts of the Submittal Number.
   d. A typical Submittal Number for the third Working Drawing submitted under Section 15101, Ductile Iron Pipe, would be 15101-003.
2. The Review Cycle shall be a three-digit number indicating the initial submission or resubmission of the same submittal. For example:
   001 = First (initial) submission
   002 = Second submission (first resubmission)
   003 = Third submission (second resubmission)

3. An example of the typical submittal identification numbers for the first submission of the third submittal submitted under Section 15101, Ductile Iron Pipe is:

Submittal Number	Review Cycle
15101-003	001

4. An example of the typical submittal identification numbers for the second submission of the third submittal submitted under Section 15101, Ductile Iron Pipe is:

Submittal Number	Review Cycle
15101-003	002

I. After ENGINEER completes his review, Shop Drawings will be affixed with a stamp and marked with one of the following notations:
   1. Approved.
   2. Approved as Corrected.
   3. Approved as Corrected, Resubmit.
   4. Revise and Resubmit.
   5. Not Approved.
   6. Not Reviewed.
   7. For Information Only.

J. If a submittal is acceptable, the ENGINEER will mark it “Approved” or “Approved as Corrected” and will forward electronic copy in PDF format of the submittal to the

OWNER for review and comment. The OWNERS review process will begin when all required copies of a specific submittal are received. After the OWNERS review is complete, the ENGINEERS and OWNERS comments will be combined and returned to CONTRACTOR electronically.

K. Upon return of a submittal marked "Approved" or "Approved as Corrected", CONTRACTOR may order, ship or fabricate the materials included on the submittal, provided it is in accordance with the corrections indicated.

L. If a Shop Drawing marked "Approved as Corrected" has extensive corrections or corrections affecting other Shop Drawings or Work, ENGINEER may require that CONTRACTOR make the corrections indicated thereon and resubmit the Shop Drawings for record purposes. Such Shop Drawings will have the notation, "Approved as Corrected - Resubmit." The corrected Shop Drawing shall be a pre-condition for payment for the work item of the Shop Drawing.

M. If a submittal is unacceptable, an electronic copy will be returned to CONTRACTOR with one of the following notations:
   1. "Revise and Resubmit".
   2. "Not Approved".

N. Upon return of a submittal marked "Revise and Resubmit", make the corrections indicated and repeat the initial approval procedure. The "Not Approved" notation is used to indicate material or equipment that is not acceptable. Upon return of a submittal so marked, repeat the initial approval procedure utilizing acceptable material or equipment.

O. Any related Work performed or equipment installed without an "Approved" or "Approved as Corrected" Shop Drawing will be at the sole responsibility of CONTRACTOR.

P. Shop Drawings shall be submitted well in advance of the need for the material or equipment for construction and with ample allowance for the time required to make delivery of material or equipment after data covering such is approved. Assume the risk for all materials or equipment which are fabricated or delivered prior to the approval of Shop Drawings. Materials or equipment will not be included in periodic progress payments until approval thereof has been obtained in the specified manner.

Q. ENGINEER will review and process all submittals promptly; a reasonable time shall be allowed for this, for the Shop Drawings being revised and resubmitted, and for time required to return the approved Shop Drawings to CONTRACTOR.

R. Responsibility belongs to CONTRACTOR to review submittals made by his suppliers and subcontractors before transmitting them to the ENGINEER to assure

proper coordination of the Work and to determine that each submittal is in accordance with CONTRACTOR'S desires and that there is sufficient information about materials and equipment for ENGINEER to determine compliance with the Contract Documents. Incomplete or inadequate submittals will be returned for revision without review.

S. Furnish required submittals with complete information and accuracy in order to achieve required approval of an item within one submittal. Backcharges for resubmittals that account for a number greater than 20 percent of the total number of first time submittals and will be backcharged for all third submittals. The number of first time submittals shall be equal to the number of submittals agreed to by ENGINEER and CONTRACTOR in accordance with Section 01330 Appendix A. All costs to ENGINEER involved with subsequent submittal of Shop Drawings, Samples or other items requiring approval will be backcharged to CONTRACTOR at the rate of 3.0 times direct technical labor cost by deducting such costs from payments due CONTRACTOR for Work completed. In the event that CONTRACTOR requests a substitution for a previously approved item, all of ENGINEER'S costs in the reviewing and approval of the substitution will be backcharged to CONTRACTOR, unless the need for such substitution is beyond the control of CONTRACTOR.

T. The OWNER reserves the right to withhold monies, identified in the General Conditions, for Shop Drawing reviews beyond those described herein.

U. The ENGINEER will implement, if requested by CONTRACTOR, one special Shop Drawing Review Meeting. The purpose of the meeting is to expedite Shop Drawing reviews for the equipment and materials required for the first document of the Work. Requirements of this Section will not be waived, but could be expedited.

V. Mark each page of a submittal and each individual component submitted with the specification number, paragraph, and subparagraph. Arrange submittal information presentation to appear in the sequence in the Specification Section.

PART 2 - PRODUCTS (NOT USED)

PART 3 - EXECUTION (NOT USED)

+ + END OF SECTION + +

SECTION 01412

STORMWATER POLLUTION PREVENTION PLAN AND PERMIT

PART 1 - GENERAL

1.1 DESCRIPTION

A. Comply with the terms and conditions of the Arizona Pollutant Discharge Elimination System (AZPDES) requirements under the Arizona Department of Environmental Quality (ADEQ) General Permit. Under provisions of that permit, CONTRACTOR is designated as permittee and responsible for providing necessary material and for taking appropriate measures to minimize pollutants in stormwater runoff from the Project. Obtain a DeMinimus discharge permit from ADEQ for any discharge that is to Waters of the U.S., and comply with the requirements of the permit.

B. The Contract Price shall include all material, labor and other permits and incidental costs related to:
   1. Preparing, updating and revising the Stormwater Construction Pollution Prevention Plan (SWPPP).
   2. Installing and maintaining all structural and non-structural items chosen by CONTRACTOR to comply with the construction SWPPP.
   3. Clean-up and disposal costs associated with clean-up and repair following storm events or CONTRACTOR caused spills on the Project.
   4. Implementing and maintaining Best Management Practices to comply with the OWNER'S stormwater code.
   5. Preparing the Notice of Intent and Notice of Termination shall be covered by the AZPDES General Permit for Arizona.
   6. Obtain and comply with DeMinimus permit, if such permit is required.

C. Coordinate the requirements under this Section with Section 02315, Structural Excavation and Backfill, permit requirements. All necessary SWPPP controls and practices must be implemented prior to commencement of any construction activity.

1.2 SUBMITTALS

A. Submit, at least two days prior to the initial start of construction on the project; completed and signed Notice of Intent forms to the State of Arizona at the following addresses:
   1. Stormwater Program - Water Permits Section / NOI
      Arizona Department of Environmental Quality
      1110 West Washington, 5415B-3
      Phoenix, AZ 85007

B. Submit to the OWNER, no later than 14 days before submitting to the State agency the following:
   1. Notice of Intent (NOI) to be covered by the AZPDES General Permit for Arizona, including certifications of signature.
   2. SWPPP for the Project, including certification of signature. Stormwater Plan shall include CONTRACTOR'S proposed temporary means for stormwater control during all phases of construction and include stormwater pumping/retention plans. This submittal shall be coordinated with CONTRACTOR'S Excavation Plan submittal, specified in Section 02315, Excavation and Backfill.
   3. A manual has been prepared by the Maricopa County Flood Control District to aid in CONTRACTOR'S preparation of the SWPPP. This manual, "Drainage Design Manual for Maricopa County Arizona, Volume III, Erosion Control" is available at the Flood Control District Office, 2801 West Durango Street, Phoenix, Arizona. The complete Construction General Permit is available from the ADEQ website at:
      https://www.azdeq.gov/swppp

C. Submit to the OWNER, as part of the Construction SWPPP a construction site inspection report that includes the following:
   1. Inspection scope.
   2. Inspector qualifications.
   3. Observations of SWPPP non-compliance and corrective steps taken.
   4. Certificate of Compliance with SWPPP and the AZPDES General Permit for Stormwater Discharge in the event of no incidents. Reports shall be submitted each quarter, at a minimum, throughout the Contract duration.

D. Submit to the OWNER, upon project completion the Notice of Termination (NOT) of coverage under AZPDES General Permit.

E. CONTRACTOR shall submit electronic copy per Specification Section 01332, Shop Drawing Procedures. Text shall be in electronic ASCII format. Drawings and figures shall be in pdf ".pdf" format.

PART 2 - PRODUCTS (NOT USED)

PART 3 - EXECUTION (NOT USED)

+ + END OF SECTION + +

SECTION 01413

CONTRACTOR'S HAZARDOUS MATERIALS MANAGEMENT PROGRAM

PART 1 - GENERAL

1.1 DESCRIPTION

A. Comply with all Federal, State, and local Laws and Regulations related to environmental protection and environmental safety including, but not limited, to the following:
   1. Title 29 Code of Federal Regulations Parts 1910, Occupational Safety and Health.
   2. Title 40 Code of Federal Regulations, Environmental Protections.
   3. Title 49 Code of Federal Regulations, Transportation.
   4. State Occupational Safety and Health Administration (OSHA).
   5. Arizona Department of Environmental Quality (ADEQ).
   6. Arizona Department of Water Resources (ADWR).
   7. Maricopa County Air Pollution Control Regulations.

B. In order to ensure the OWNER that CONTRACTOR is complying with the intent of the regulations stated in Paragraph 1.1.A, above, as they relate to the on site use of hazardous materials, hazardous wastes and other substances similarly defined in those regulations, CONTRACTOR shall develop and maintain a CONTRACTOR'S Hazardous Materials Management Program that includes as a minimum, but is not limited to the requirements specified herein. The interests of the OWNER are that accidental spills, site contamination, and injury of personnel on the site are avoided. OWNER will not enforce suspected violations of the rules and regulations referenced in Paragraph 1.1.A, above, however the OWNER will notify CONTRACTOR of suspected violations. If in the opinion of the OWNER, CONTRACTOR fails to address the suspected violations in a timely and appropriate manner, OWNER will notify Federal, State, or local regulatory agencies, report the suspected violations to them, and request that they inspect CONTRACTOR'S operations. Any fines that may be levied against OWNER for violations committed on the site by CONTRACTOR, as well as any costs to OWNER associated with cleanup of materials, shall be reimbursed immediately by CONTRACTOR. All documents required by the program shall be made available to the OWNER'S Environmental Representative immediately, upon request.

C. Responsibility for any hazardous waste, as defined in any of the above listed regulations, and those generated by the CONTRACTOR, belongs to CONTRACTOR. If CONTRACTOR is going to generate, or has generated, a substance that qualifies as a hazardous waste, must obtain an EPA identification

number, listing CONTRACTOR'S name and construction site address as the generator of the hazardous waste. Responsibility for the identification, analysis, profiling, transport and disposal of hazardous wastes generated, belongs to CONTRACTOR. The identification number can be obtained from the Arizona Department of Environmental Quality (ADEQ). This number shall be provided to the ENGINEER within 30 days after the Notice to Proceed, or before any hazardous materials are brought onto the site.

1.2 HAZARDOUS MATERIALS PROGRAM REQUIREMENTS

A. Within the regulations listed in Paragraph 1.1.A, above, terms such as hazardous material, hazardous wastes, and similar terms have varying definitions. To dispel confusion regarding what materials fall under the Program Requirements and for the purposes of this Article, Hazardous Material is defined as "any material, whether solid, semi-solid, liquid, or gas, which, if not stored or used properly, may cause harm or injury to persons through inhalation, ingestion, absorption or injection, or which may negatively impact the environment through the use or discharge of the material on the ground, in the water (including groundwater), or to the air."

B. All chemicals brought onto the site must be approved by OWNER. Prior to bringing any chemical on site, request approval from OWNER'S Environmental Representative for each chemical CONTRACTOR proposes to bring on site. At the time of request, OWNER'S Environmental Representative may request and receive from CONTRACTOR, specific information associated with each chemical. The specific information may include, but is not limited to, SDS, manufacture, vendor, container size(s), number of containers, minimum and maximum volume of material intended to be stored on site, as well a description to the process or procedures in which any requested chemical is to be used. OWNER, within 10 working days from receipt of the specific chemical information, will inform CONTRACTOR as to whether the chemical has been approved for use on site.

C. CONTRACTOR shall maintain on site two notebooks containing (1) a chemical inventory, and (2) current (dated within the past two years) Safety Data Sheets for all materials being used on site, whether or not they are defined as a Hazardous Material in Paragraph 1.2.A, above. One notebook shall be kept in CONTRACTOR'S on-site office and the other shall be kept in a location specified by the OWNER'S Environmental Representative. These notebooks must be kept up-to-date as materials are brought onto and removed from the site. Copies of SDS sheets for chemicals removed from the site shall be provided to the OWNER'S Environmental Representative.

D. CONTRACTOR shall develop an emergency/spill response plan, for each hazardous material or class/group of materials. As a minimum, the response plan must address the following:

1. Provide a description of equipment on site available to contain or respond to an emergency/spill of the material.
2. Notification procedures.
3. Response coordination procedures between CONTRACTOR, OWNER, and ENGINEER.
4. Provide a Site Plan showing the location of stored hazardous materials and location of spill containment/response equipment.
5. Provide a description of the hazardous material handling and spill response training provided to CONTRACTOR'S employees.

E. CONTRACTOR shall in accordance with applicable Laws and Regulations, properly and safely store all hazardous materials, which shall include as a minimum, the following:
   1. Have a designated storage site for hazardous materials that includes secondary containment. The site must include barriers to prevent vehicles from colliding with the storage containers and offer protection from environmental factors such as weather.
   2. Provide signage in accordance with applicable Laws and Regulations, clearly identifying the hazardous materials storage site.
   3. All hazardous material~~s~~ containers must bear the applicable Hazard Diamonds.

F. CONTRACTOR shall properly label all containers of consumable materials, whether or not they are classified as Hazardous Materials under this Section. The name of CONTRACTOR or subcontractor shall be stenciled on any container containing a hazardous material and on any container over five-gallon capacity containing a non-hazardous material. Any container must have a label clearly identifying the contents. If any such unlabeled containers are discovered on the site, the OWNER'S Environmental Representative will notify CONTRACTOR. Responsibility to remove such containers belongs to CONTRACTOR. Containers will be properly labeled or removed it from the site within one hour. Any containers that are filled from larger containers must also be properly labeled.

G. OWNER encourages storage of hazardous materials off site until the materials are needed on site.

H. CONTRACTOR shall provide all documentation required herein available immediately upon request of OWNER'S Environmental Representative. CONTRACTOR'S Safety Representative will meet at least monthly with OWNER'S Environmental Representative to review CONTRACTOR'S Hazardous Materials Management Program documents, procedures, and inspect the storage site and job site to ensure the requirements specified herein are being complied with. Also, provide OWNER'S Environmental Representative and the ENGINEER with copies of all permits obtained from environmental regulatory agencies.

I. Provide documentation to ENGINEER and OWNER's Environmental Representative that CONTRACTOR, subcontractors, or others hired by CONTRACTOR making deliveries of hazardous Materials (as defined in Title 49 CFR) to the site are in compliance with Title 49 CFR 172.800 – 172.804, which requires each person who offers for transportation in commerce or transports in commerce one or more of the following hazardous materials, as defined by Title 49 CFR, must develop and adhere to a security plan for hazardous materials that conforms to the requirements of this subpart.

PART 2 - PRODUCTS (NOT USED)

PART 3 - EXECUTION (NOT USED)

++ END OF SECTION ++

SECTION 01414

EARTHMOVING AND DUST CONTROL

PART 1 - GENERAL

1.1 DESCRIPTION

A. CONTRACTOR shall obtain all earthmoving permits and any other permits required for earthmoving and dust generating operations related to the Work as required by the Maricopa County Air Pollution Control Regulations.

B. CONTRACTOR shall not cause or allow any dust generating operation, earthmoving operation, use of property, or any other operation which causes fugitive dust emissions that exceed the 20 percent visible emission opacity limit in Rule 300 of Maricopa County's Air Pollution Control Regulations.

C. If requested by the OWNER, ENGINEER, or Maricopa County representative, shall conduct opacity observations for visible emissions of fugitive dust in accordance with techniques specified in USEPA Reference Method 9.

D. In addition to earthmoving permits, CONTRACTOR shall obtain an approved Dust Control Plan from Maricopa County. At a minimum, the Dust Control Plan shall include the following information:
   1. Name(s), address(es) and phone number(s) of the person(s) responsible for the preparation, submittal, and implementation of the Dust Control Plan and responsible for the dust generating operations.
   2. A site plan that describes the total area of land surface to be disturbed (in acres); the operations and activities to be performed on the site; actual and potential sources of fugitive dust emissions; and the delivery, transportation, and storage areas for the site (including types of materials stored and appropriate size of material stock piles).
   3. Description of the Reasonably Available Control Measures (RACM) to be applied during all periods of dust generating operations at all actual and potential sources of fugitive dust.
   4. Description of dust suppressants to be applied including product specifications; method, frequency, and intensity of application; type, number, and capacity of application equipment; and certifications related to the suppressant's appropriate and safe use.
   5. Description of specific surface treatment(s) or RACM used to control material track-out where unpaved or access points join paved surfaces.
   6. Description of at least one alternative RACM for each actual and potential fugitive dust source shall be designated as a contingency measure.

E. CONTRACTOR shall post a copy of all earthmoving permits as well as the approved Dust Control Plan in a conspicuous location at the worksite and provide a copy of each to the ENGINEER.

F. CONTRACTOR shall maintain a daily written log that records the actual application or implementation of the RACMS described in the approved Dust Control Plan. Maintain this written log and supporting documentation on site and shall make available for review on request by ENGINEER, OWNER, or Maricopa County representative. Retain copies of the Dust Control Plan, RACM implementation records, and all supporting documentations for a minimum of three years.

G. CONTRACTOR, at a minimum, CONTRACTOR shall provide all necessary equipment and materials to apply sufficient dust suppressants (e.g., water, etc.), properly clean (sweep, etc.) all track-out areas, and provide adequate physical stabilizations (e.g., gravel, recycled asphalt, etc.) to meet all requirements of the earthmoving permit and approved Dust Control Plan. Use these methods to control fugitive dust generation from all CONTRACTOR operations on all CONTRACTOR areas including, but not limited to:
   1. Construction areas.
   2. Vehicle and equipment parking areas.
   3. Material storage areas.
   4. Office and trailer areas.
   5. Haul and access roadways.
   6. Track-out areas.
   7. All other areas where CONTRACTOR work, storing, or parking of vehicles, equipment, and materials.

H. CONTRACTOR shall pay all fines issued to the OWNER by the USEPA, ADEQ, or Maricopa County due to violation of CONTRACTOR'S earthmoving permit and Dust Control Plan.

PART 2 - PRODUCTS (NOT USED)

PART 3 - EXECUTION (NOT USED)

+ + END OF SECTION + +

SECTION 01415

CONFINED SPACE ENTRY PLAN

PART 1 - GENERAL

1.1 DESCRIPTION

A. OWNER has determined that portions of the Work site may constitute "confined spaces" as defined in 29 CFR §1926.21(b)(2) and 1910.146. Accordingly, CONTRACTOR shall incorporate into its Safety Plan for the Work site appropriate measures to protect the health and safety of all persons on the Work site or who may be affected by the Work, including, without limitation thereby, employees and representatives of CONTRACTOR, any subcontractor, OWNER, or ENGINEER while they are present and engaged in the performance of their duties on the Work site.

B. CONTRACTOR shall comply with all local, State and Federal rules and regulations related to the protection of persons working or entering into confined spaces including, but not limited to the following:
   1. 29 United States Code §654.
   2. Title 29 Code of Federal Regulations Parts 1910 and 1926, Occupational Safety and Health.
   3. Ariz. Rev. Stat. §23-403.
   4. City of Chandler Confined Space Program.

C. To assure OWNER that CONTRACTOR is complying with the intent of the regulations stated in Paragraph 1.1.A, above, as they relate to the protection of all persons on the Work site, CONTRACTOR'S Safety Plan, at a minimum, respond to the following requirements as they relate to Work in confined spaces:
   1. Conducting a Site-specific hazard assessment to identify confined spaces that should be characterized as "Permit Required Confined Spaces" within the meaning of 29 CFR §1926.21 (b)(6)(i) and 29 CFR §1910.146.
   2. Adopting as an element of its Safety Plan appropriate requirements for safeguarding access to "Permit Required Confined Spaces."
   3. Providing training, personal protective or safety equipment and personnel as needed to perform the Safety Plan's requirements for "Permit Required Confined Spaces."
   4. Performing all record-keeping required for "Permit Required Confined Spaces", including the required permits and confined space data sheets located in Section 01331, Reference Forms.

1.2 CONFINED SPACES SAFETY PLAN REQUIREMENTS

A. For purposes of the Safety Plan requirements listed in Article 1.1, above, "confined spaces" are those areas on or about the Work site that fall within OSHA's definition as "any space having limited means of egress, which is subject to the accumulation of toxic or flammable contaminants or has an oxygen deficient atmosphere. Confined or enclosed spaces include, but are not limited to, storage tanks, process vessels, bins, boilers, ventilation or exhaust ducts, sewers, underground utility vaults, tunnels, pipelines, and open top spaces more than four feet in depth such as pits, tubs, vaults, and vessels."

B. CONTRACTOR shall ensure that those persons who are required to enter a confined space are trained according to OSHA requirements set forth in 29 CFR §1926.21 (b)(6)(i).

C. If the confined space is a "Permit Required Confined Space", then CONTRACTOR shall comply with the standards set forth in 29 CFR §1910.146. and the City of Chandler, Confined Space Program.

D. "Permit Required Confined Space" means a confined space that has one or more of the following characteristics:
   1. Contains or has the potential to contain a hazardous atmosphere.
   2. Contains a material that has the potential for engulfing an entrant.
   3. Has an internal configuration such that an entrant could be trapped or asphyxiated by inwardly converging walls or floors, or by a floor that slopes downward and tapers to a smaller cross-section.
   4. Contains any other recognized serious safety or health hazard.

1.3 SUBMITTALS

A. CONTRACTOR shall prepare and submit a site-specific Confined Space Entry Plan as a portion of the CONTRACTOR'S site-specific Health and Safety Plan

B. CONTRACTOR shall submit soft copy per Specification Section 01332, Shop Drawing Procedures. Soft copies shall be in pdf format.

PART 2 - PRODUCTS (NOT USED)

PART 3 - EXECUTION (NOT USED)

+ + END OF SECTION + +

SECTION 01416

SPECIAL INSPECTIONS

PART 1 - GENERAL

1.1 SUMMARY

A. Section includes:
   1. This Section describes the requirements for providing special tests and inspections required by the International Building Code.

B. Purpose:
   1. This Document was developed to address the requirements of the 2024 International Building Code IBC, chapter 17.
   2. One or more special inspectors will be hired by the OWNER or the OWNER'S Agent to provide inspections during construction on the types of work stated herein.
   3. When required, a Certificate of Special Inspections will be submitted to the Building Code Official as a condition for permit issuance. This specification includes a complete list of materials and work requiring special inspections, the inspections to be performed and a list of the minimum qualifications of the individuals, approved agencies or firms intended to be retained for conducting such inspections.

1.2 DEFINITIONS

A. Special Inspector: Representative of the OWNER approved inspection agency designated for that portion of the work.

B. Testing Agency: Approved agency, not affiliated or hired by the CONTRACTOR, which is responsible for the materials testing requirements of the project including but not limited to concrete cylinder breaks, soils testing, and masonry materials testing.

C. Soils Engineer or Geotechnical Engineer: For the purposes of Special Inspection "Soils Engineer," "Geotechnical Engineering," and "Special Inspector" shall be interchangeable as pertains to the Division 02 specifications.

D. NICET: National Institute for Certification in Engineering Technologies.

E. RPSI: Registered Professional for Special Inspections.

1.3 CONTRACTOR'S RESPONSIBILITIES

A. Cooperate with testing agency personnel, special inspector, and agents of the Building Code Official and provide access to the work.
   1. Providing access to the work shall include all labor and facilities to perform inspections and tests as listed in the specifications for the duration of the inspections or tests involved.
   2. Provide means to obtain and handle samples taken on site.

B. Attend a pre-construction meeting to coordinate and clarify inspection and testing procedures, requirements.

C. Notify special inspector and/or testing agency of work to be inspected/tested minimum of 48 hours prior.

D. Work for which special inspections are required shall remain accessible and exposed for the purposes of special inspections until completion of required special inspections.

E. Any portion of work that is not in conformance shall be corrected and re-inspected. Such portions of the work shall not be covered or concealed until authorized by ENGINEER.

F. Work to be inspected should be complete at time of inspector's arrival on-site.

G. Payment for Special Inspection services will be in accordance with the following:
   1. Payment described below is for the Testing Agency and Special Inspector costs and does not include the CONTRACTOR's costs listed in Paragraph 1.3 A.
   2. After CONTRACTOR notification, inspector arrives at site and performs inspection within the timeframe defined in Item 4 below.
      a. Inspection reveals work is satisfactory.
      b. OWNER pays all costs associated with this inspection.
   3. After CONTRACTOR notification, inspector arrives at site and performs inspection within the timeframe defined in Item 4 below.
      a. Inspection reveals work is deficient.
      b. CONTRACTOR corrects deficiencies within timeframe defined in Item 4 below.
      c. Work is re-inspected and work is satisfactory.
      d. OWNER pays all costs associated with this inspection.
   4. After CONTRACTOR notification, inspector arrives at site and work is not ready for inspection when inspector arrives.
      a. Inspector will remain on-site for a maximum of 2 hours awaiting the completion of the work.

b. If work is not ready for inspection at the end of this period, inspector will be dismissed until CONTRACTOR requests re-inspection.
c. All costs associated with this inspection trip will be charged to the CONTRACTOR.

5. After CONTRACTOR notification, inspector arrives at site and performs inspection within the timeframe defined above.
   a. Inspection reveals work is deficient.
   b. CONTRACTOR attempts to correct deficiencies within 2 HR timeframe and calls for re-inspection.
   c. Work is re-inspected and found to still be deficient.
   d. Inspector will be dismissed.
   e. All costs associated with this inspection trip will be charged to the CONTRACTOR.
6. OWNER will pay for "passing" soils on the Project. Costs of corrective actions and cost of failed test areas requiring retesting are the sole responsibility of the CONTRACTOR.

H. Special Inspection is intended to be an independent quality assurance. Special Inspections shall not relieve the CONTRACTOR of any quality assurance, quality control, workmanship, or warranty responsibilities. CONTRACTOR's own personnel shall review all work to be inspected for conformance with Contract Documents prior to calling for inspection.

1.4 REPORTING DUTIES AND AUTHORITY

A. The meeting is to be attended by:
   1. OWNER.
   2. ENGINEER.
   3. Building Code Official or designee.
   4. Testing Agency and Special Inspectors.
   5. General Contractor.
   6. Appropriate Sub-contractor(s).

B. Reporting requirements for special inspector per IBC 2024.
   1. Comply with requirements of IBC Section 1704.2.4.
   2. Provide written documentation of all inspections and testing.
      a. Include exact location of work.
      b. If testing of specimens is included, include detailed information on storage and curing of specimens prior to testing.
   3. Furnish inspection and test reports to the CONTRACTOR, the ENGINEER'S Project Manager and the OWNER'S on-site representative.
      a. Indicate that work inspected was done in conformance with approved construction documents.

b. Immediately report any discrepancies to the CONTRACTOR for correction.
   1) Deficient work that has been covered up or concealed prior to re-inspection shall be reported to the ENGINEER and the Building Code Official.
c. If the discrepancies are not corrected in a timely fashion, notify the ENGINEER's Project Manager and OWNER'S on-site representative.

4. Issue an electronic report summarizing all inspections, corrective action notifications and resolution of discrepancies and non-conforming work every two weeks (14 calendar days).
   a. Copy will be available to:
      1) ENGINEER's Project Manager.
      2) OWNER.
      3) The Building Code Official.
      4) General Contractor.
5. At the end of the Project, the RPSI shall compile all test reports for each inspected material and for each Special Inspector and summarize into a single PDF and submit to the ENGINEER and Building Code Official.
   a. Final summary report to be signed and sealed by a Registered Professional for Special Inspections stating:
      1) The required Special Inspections have been performed.
      2) All discrepancies have been resolved except as specifically stated in the summary report.

C. Special Inspector does not have authority to stop work or modify the requirements of the Contract Documents.

1.5 QUALIFICATIONS

A. Qualifications stated here are the minimum recommended by the ENGINEER. If the Building Code Official has more stringent qualifications, the more stringent qualifications will take precedence.

B. All Special Inspections and Testing to be done under the direction of a Professional ENGINEER registered in the State of Arizona herein referred to as Registered Professional for Special Inspections (RPSI).

C. Soil related testing.
   1. The Testing Agency shall have a minimum of 10 years' experience in the testing of these materials.
   2. The Testing Agency's technician(s) conducting this testing:
      a. Shall have a minimum of five years' experience in the testing of soil, concrete, mortar, grout, steel and aluminum as appropriate.
   3. Concrete related work:

a. International Code Council certification for Reinforced Concrete and American Concrete Institute Concrete Field-Testing Technician – Grade 1.

D. Special Structural Inspections:
1. Professional Engineers, licensed in the State of Arizona, may perform special inspections in accordance with their license qualifications.
2. Other individuals, working under the direct supervision of a licensed engineer and meeting the following qualifications, may perform special inspections.
3. Soils related work:
   a. NICET Level II Certification in geotechnical engineering technology/construction; or
   b. Registered Geologist; or
4. Concrete related work:
   a. International Code Council certification for Reinforced Concrete Special Inspector or American Concrete Institute Concrete Construction Special Inspector.
5. Precast concrete erection related work:
   a. Professional Engineers, licensed in the State of Arizona.
6. Precast concrete erection welding:
   a. American Welding Society as a Certified Welding Inspector; or
   b. International Code Council Structural Steel and Welding Certification and American Welding Society Qualified and one year of related experience; or
   c. NDT Level II or II Certificate (for non-destructive testing only).
7. Steel and aluminum related work:
   a. Frame and material verification (Appendix E, Items 3 and 6):
      1) International Code Council Structural Steel and Welding Certification and one-year related experience.
   b. Welding:
      1) American Welding Society as a Certified Welding Inspector; or
      2) International Code Council Structural Steel and Welding Certification and American Welding Society Qualified and one year of related experience; or
      3) NDT Level II or II Certificate (for non-destructive testing only).
8. Other equivalent certifications will not be acceptable unless approved by the Engineer.

1.6 TESTS

A. Selection of the material required to be tested shall be by the OWNER'S Testing Laboratory and not the CONTRACTOR.

1.7 SPECIAL TESTING AND INSPECTIONS

A. Testing laboratory: Special tests will be performed by the OWNER'S testing laboratory as specified in Section 01451.

B. The following types of work require special inspection as described in IBC. Refer to the following verification, testing, and inspection schedules.
   1. Appendix A, Cast-In-Place Concrete Special Inspection Schedule.
   2. Appendix D, Soils Verification and Inspection Schedule.
   3. Appendix E, Structural Steel Special Inspection Schedule.

C. The following Work also requires special inspection per the Building Code requirements:
   1. Special grading, excavating, and filling, as indicated on the Drawings and Specifications.

PART 2 - PRODUCTS

PART 3 - EXECUTION

APPENDIX A
CAST-IN-PLACE CONCRETE SPECIAL INSPECTION SCHEDULE

Verification and Inspection	Reference Standard	Frequency of Inspection	
		Continuous During Task Listed	Periodic During Task Listed
1. Inspection of reinforcing steel, including prestressing tendons, and placement.	ACI 318: Ch. 20, 25.2, 25.3, 26.6.1-26.6.3	—	X
2. Inspect bolts to be installed in concrete prior to placement of concrete.	ACI 318: 17.8.2	X	—
3. Inspection of post-installed mechanical and adhesive anchors into hardened concrete (downward inclined orientations).	ACI 318: 17.8.2	—	X
4. Inspection of post-installed adhesive anchors into hardened concrete (horizontal or upward inclined orientations).	ACI 318: 17.8.2.4	X	—
5. Verifying use of required design mix.	ACI 318: Ch. 19, 26.4.3, 26.4.4	—	X
6. At the time fresh concrete is sampled to fabricate specimens for strength tests, perform slump and air content tests, and determine the temperature of the concrete.	ASTM C172, ASTM C31, ACI 318: 26.5, 26.12	X	—
7. Inspection of concrete placement for proper application techniques.	ACI 318: 26.5	X	—
8. Inspection for maintenance of specified curing temperature and techniques.	ACI 318: 26.5.3-26.5.5	—	X
9. Inspection of formwork for shape, location, and dimensions of the concrete member being formed.	ACI 318: 26.11.1.2(b)	—	X
10. Verification of in-situ concrete strength, prior to removal of shores and forms from beams and structural slabs.	ACI 318: 26.11.2	—	X

APPENDIX D
SOILS VERIFICATION AND INSPECTION SCHEDULE

Verification and Inspection	**Reference Standard**	**Frequency of Inspection**	
		Continuous During Task Listed	**Periodic During Task Listed**
1. Verify materials below footings are adequate to achieve the design bearing capacity.	IBC 1705.6	—	X
2. Verify excavations are extended to proper depth and have reached proper material.	IBC 1705.6	—	X
3. Perform classification and testing of controlled fill materials.	IBC 1705.6	—	X
4. Verify use of proper materials, densities, and lift thicknesses during placement and compaction of controlled fill.	IBC 1705.6	X	—
5. Prior to placement of controlled fill, observe subgrade and verify that site has been prepared properly.	IBC 1705.6	—	X

APPENDIX E
STRUCTURAL STEEL SPECIAL INSPECTION SCHEDULE

Verification and Inspection	Reference Standard	Frequency of Inspection	
		Continuous During Task Listed	Periodic During Task Listed
1. Material verification of structural steel:			
a. Identification markings to conform to ASTM standards specified in the approved construction documents.	AISC 360: Chapter N	—	X
b. Manufacturers' certified mill test reports.	AISC 360: Chapter N	X	-
2. Material verification of weld filler materials:			
a. Identification markings to conform to AWS specification in the approved construction documents.	AISC 360: Table N5.4-1	-—	X
b. Manufacturer's certificate of compliance required.	AISC 360: Table N5.4-1	—	X
3. Inspection of welding:			
a. Structural steel:		—	—
1) Complete and partial penetration groove welds.	AISC 360: Table N5.4-1, N5.4-2, N5.4-3	X	—
2) Multi-pass fillet welds.	AISC 360: Table N5.4-1, N5.4-2, N5.4-3	X	—
3) Single-pass fillet welds > 5/16".	AISC 360: Table N5.4-1, N5.4-2, N5.4-3	X	—
4) Single-pass fillet welds < 5/16".	AISC 360: Table N5.4-1, N5.4-2, N5.4-3	—	X
5) Floor and deck welds.	AISC 360: Table N5.4-1, N5.4-2, N5.4-3	—	X
b. Reinforcing steel:		—	—

Verification and Inspection	Reference Standard	Frequency of Inspection	
		Continuous During Task Listed	Periodic During Task Listed
1) Verification of weldability of reinforcing steel other than ASTM A 706.	AISC 360: Table N5.4-1, N5.4-2, N5.4-3	—	X
2) "Form Saver" (reinforcing couplers).	AISC 360: Table N5.4-1, N5.4-2, N5.4-3	X	—

++ END OF SECTION ++

SECTION 01420

REFERENCES

PART 1 - GENERAL

1.1 DEFINITIONS

A. General: Definitions of basic Contract terms are included in the General Conditions.

B. Definitions of terms commonly found in the Specifications are as follows:
   1. Indicated: The term indicated refers to graphic representations, notes, or schedules on the Drawings, or to other paragraphs or schedules in the Specifications and similar locations in the other Contract Documents. Terms such as “shown”, “noted”, “scheduled”, and “specified” are used to help the user locate the reference. There is no limitation on the location.
   2. Installer (or applicator, or erector): An installer is CONTRACTOR or another entity engaged by CONTRACTOR, either as an employee or subcontractor to perform a particular construction activity, including installation, erection, application or similar operations. Installers are required to be experienced in the operations they are engaged to perform.
      a. The term “experienced”, when used with the term “installer”, means having successfully completed a minimum of five previous projects similar in size and scope to this Project; being familiar with the special requirements indicated; and having complied with the requirements of authorities having jurisdiction and of the Supplier of the product being installed.
   3. Trades: Use of a term such as “carpentry” does not imply that certain construction activities must be performed by accredited or unionized individuals of a corresponding generic name, such as “carpenter”. It also does not imply that requirements specified apply exclusively to trades persons of the corresponding generic name.
   4. Assigned Specialists: Certain Sections of the Specifications require that specific construction activities shall be performed by specialists who are recognized experts in those operations. Said specialists shall be engaged for those activities, and their engagement is a requirement over which CONTRACTOR has no option. These requirements shall not be interpreted to conflict with the enforcement of building codes and similar regulations governing the Work. Also, they are not intended to interfere with local trade-union jurisdictional settlements and similar conventions. Such assignments shall not relieve CONTRACTOR of its responsibility for fulfilling the requirements of the Contract Documents.

1.2 ABBREVIATIONS

A. Common abbreviations, which may be found in the Specifications, are:

alternating current		AC
Ampere		A
ante meridiem		am
Average		avg.
biochemical oxygen demand		BOD
brake horsepower		BHP
British thermal unit		BTU
Centigrade		C
Company		Co.
cubic inch		cu. in.
cubic foot		cu. ft.
cubic yard		cu. yd.
cubic feet per minute		cfm
cubic feet per second		cfs
Decibel		DB
degree Centigrade (or Celsius)	(Say)	20°C

degree Fahrenheit	(Say)	68°F
Diameter		dia.
direct current		DC
Dollars		$
Each		ea
Efficiency		eff
Fahrenheit		F
feet per hour		fph
Feet		ft.
feet per minute		fpm
feet per second		fps
Figure		Fig.
Flange		flg
foot-pound		ft-lb
gallon		gal
gallons per minute		gpm
gallons per second		gps

gram	g
Hertz	Hz
horsepower	hp
hour	hr
inch	in.
inch-pound	in.-lb
inside diameter	id
kilovolt-ampere	kva
kilowatt	KW
kilowatt-hour	kwhr
linear foot	lin. ft.
liter	l
maximum	max.
mercury	Hg
milligram	mg
milligrams per liter	mg/l
milliliter	ml

millimeter	mm
million gallons per day	mgd
million gallon	mil
minimum	min.
National Pipe Threads	NPT
net positive suction head	npsh
number	No.
ounce	oz
outside diameter	OD
parts per million	ppm
post meridiem	pm
pound	lb
pounds per square inch	psi
pounds per square inch absolute	psia
pounds per square inch gage	psig
pounds per square foot	psf
revolutions per minute	rpm
second	sec.

specific gravity	sp gr
square	sq
square foot	sq ft
square inch	sq in
square yard	sq yd
standard	std
standard cubic feet per minute	scfm
total dynamic head	tdh
totally-enclosed-fan-cooled	tefc
volt	V

1.3 APPLICABLE CODES

A. When a reference standard is specified, comply with requirements and recommendations stated in that standard, except when they are modified by the Contract Documents, or when applicable laws, ordinances, rules, regulations or codes establish stricter standards. The latest provisions of applicable standards shall apply to the Work, unless otherwise specified. Reference standards include, but are not necessarily limited to, the following:
   1. American Association of State Highway and Transportation Officials (AASHTO).
   2. American Concrete Institute (ACI).
   3. American Gear Manufacturers Association (AGMA).
   4. American Institute of Steel Construction (AISC).
   5. American Iron and Steel Institute (AISI).
   6. American National Standards Institute (ANSI).
   7. American Society of Heating, Refrigerating and Air Conditioning Engineers (ASHRAE).
   8. American Society of Mechanical Engineers (ASME).
   9. American Society for Testing and Materials (ASTM).

10. American Water Works Association (AWWA).
11. American Welding Society (AWS).
12. Arizona Administrative Code (AAC).
13. Concrete Reinforcing Steel Institute (CRSI).
14. Factory Mutual (FM).
15. Institute of Electrical and Electronics Engineers (IEEE).
16. National Electrical Manufacturer's Association (NEMA).
17. National Electrical Code (NEC) current adoption..
18. National Fire Protection Association (NFPA).
19. Occupational Safety and Health Administration (OSHA).
20. Prestressed Concrete Institute (PCI).
21. American Petroleum Institute (API)
22. Underwriters' Laboratories, Inc. (UL).
23. All other applicable standards listed in the Specifications and the standards of utility service companies, where applicable.
24. Maricopa Association of Governments (MAG), Uniform Standard Specifications for Public Works Construction, as supplemented by the City of Chandler. References to MAG Standard Details refer to the "Uniform Standard Details for Public Works Construction" sponsored and distributed by the Maricopa Association of Governments 2025, Arizona.
25. International Building Code (2024)
26. National Electric Code – NFPA70 (2023)
27. International Fuel Gas Code (2024).
28. International Fire Code (2024)
29. International Energy Conservation Code (2024)
30. International Mechanical Code (2024)
31. International Plumbing Code (2024)
32. The Code of the City of Chandler, Arizona
33. National Sanitation Foundation (NSF-61) and Arizona Administration Code (AAC # 18-4-213).
    a. Incorporate the requirements NSF-61, Drinking Water System Components Health Effects and AAC # 18-4-213, Standards for Additives, Materials and Equipment on all potable water systems, water treatment facilities and water distribution facilities.

1.4 OWNER'S REFERENCE SPECIFICATIONS

A. The CONTRACTOR shall maintain a complete copy of the Reference Specifications on the site.

1.5 INDUSTRY STANDARDS

A. Applicability of Standards: Except where the Contract Documents include more stringent requirements, applicable construction industry standards have the same force and effect as if bound or copied directly into the Contract Documents to the

extent referenced. Such standards are made a part of the Contract Documents by reference.

B. Publication Dates: For applicable publication dates, refer to General Conditions.

C. Conflicting Requirements: Where compliance with two or more standards is specified and the standards establish different or conflicting requirements for minimum quantities or quality levels, refer to ENGINEER for a decision before proceeding.

D. Copies of Standards: Each entity engaged in construction on the Project is required to be familiar with industry standards applicable to its construction activity. Copies of applicable standards are not bound with the Contract Documents. Where standards are required to perform a required construction activity, obtain copies of same from the publication source.

E. Abbreviations and Names: Whenever in these Specifications or the other Contract Documents references are made to the standards, specifications, or other published data of international, national, regional or local organizations, such organizations may be referred to by their acronym or abbreviation only. The following acronyms or abbreviations, which may appear in the Specifications, shall have the meanings indicated herein.

1.	AA	Aluminium Association
2.	AABC	Associated Air Balance Council
3.	AAMA	American Architectural Manufacturers Association
4.	AASHTO	American Association of State Highway and Transportation Officials
5.	ACI	American Concrete Institute
6.	ACS	American Chemical Society
7.	AFBMA	Anti-Friction Bearing Manufacturers' Association
8.	AGMA	American Gear Manufacturers Association
9.	AI	Asphalt Institute
10.	AIChE	American Institute of Chemical Engineers
11.	AISC	American Institute of Steel Construction
12.	AISI	American Iron and Steel Institute
13.	AITC	American Institute of Timber Construction
14.	ALS	American Lumber Standards
15.	AMA	Acoustical Materials Association
16.	AMCA	Air Movement and Control Association
17.	ANSI	American National Standards Institute
18.	APA	American Plywood Association
19.	API	American Petroleum Institute
20.	APHA	American Public Health Association
21.	AREA	American Railway Engineering Association
22.	ARI	Air Conditioning and Refrigeration Institute
23.	ASA	American Standards Association
24.	ASAE	American Society of Agricultural Engineers
25.	ASTM	American Society for Testing and Materials
26.	ASCE	American Society of Civil Engineers

27.	ASHRAE	American Society of Heating, Refrigerating and Air Conditioning
28.	ASME	American Society of Mechanical Engineers
29.	AWI	Architectural Woodwork Institute
30.	AWPA	American Wood Preservers' Association
31.	AWPB	American Wood Preservers Bureau
32.	AWPI	American Wood Preservers' Institute
33.	AWS	American Welding Society
34.	WWA	American Water Works Associations
35.	BHMA	Builders Hardware Manufacturers' Association
36.	CBMA	Certified Ballast Manufacturers' Association
37.	CDA	Copper Development Association
38.	CGA	Compressed Gas Association
39.	CISPI	Cast Iron Soil Pipe Institute
40.	CMAA	Crane Manufacturers' Association of America
41.	CRSI	Concrete Reinforcing Steel Institute
42.	EPA	Environmental Protection Agency
43.	ETL	Engineering Test Laboratories
44.	FCC	Federal Communications Commission
45.	FEMA	Federal Emergency Management Agency
46.	FGMA	Flat Glass Marketing Association
47.	FM	Factory Mutual Association
48.	FS	Federal Specification
49.	GA	Gypsum Association
50.	HEW	Department of Health, Education and Welfare
51.	HI	Hydraulic Institute
54.	ICBO	International Conference of Building Officials
55.	ICEA	Insulated Cable Engineers' Association
56.	IEEE	Institute of Electrical and Electronic Engineers

57.	IES	Illuminating Engineering Society
58.	IFI	Industrial Fasteners Institute
59.	IRI	Industrial Risk Insurers
60.	ISA	The Instrumentation Systems and Automation Society
61.	ISO	Insurance Services Office
62.	MAG	Maricopa Association of Governments
63.	MIA	Marble Institute of America
64.	MS	Military Specifications
65.	MMA	Monorail Manufacturers' Association
66.	NAAMM	National Association of Architectural Metal Manufacturers
67.	NACE	National Association of Corrosion Engineers
68.	NARUC	National Association of Railroad and Utilities Commissioners
69.	NBHA	National Builders Hardware Association
70.	NEC	National Electrical Code
71.	NEMA	National Electrical Manufacturers Association
72.	NESC	National Electrical Safety Code
73.	NFPA	National Fire Protection Association
74.	NHLA	National Hardwood Lumber Association
75.	NHPMA	Northern Hardwood and Pine Manufacturer's Association
76.	NLMA	National Lumber Manufacturers' Association
77.	NRCA	National Roofing Contractors Association
78.	NSF	National Sanitation Foundation
79.	NTMA	National Terrazzo and Mosaic Association
80.	NWWDA	National Wood Window and Door Association
81.	OECI	Overhead Electrical Crane Institute
82.	OSHA	Occupational Safety and Health Administration
83.	PCI	Precast Concrete Institute
84.	PEI	Porcelain Enamel Institute

85.	PPI	Plastic Pipe Institute
86.	PS	Product Standards Section-U.S. Department of Commerce
87.	RMA	Rubber Manufacturers' Association
88.	SAE	Society of Automotive Engineers
89.	SCPRF	Structural Clay Products Research Foundation
90.	SDI	Steel Deck Institute
91.	SDI	Steel Door Institute
92.	SIGMA	Sealed Insulating Glass Manufacturing Association
93.	SJI	Steel Joist Institute
94.	SMACNA	Sheet Metal and Air Conditioning National Association
95.	SPI	Society of the Plastics Industry
96.	SSPC	The Society for Protective Coatings
97.	SWI	Steel Window Institute
98.	TEMA	Tubular Exchanger Manufacturers' Association
99.	TCA	Tile Council of America
100.	UL	Underwriters' Laboratories, Inc.
101.	USGS	United States Geological Survey
102.	USPHS	United States Public Health Service
103.	WCLIB	West Coast Lumber Inspection Bureau
104.	WWEMA	Water and Wastewater Equipment Manufacturers Association

PART 2 - PRODUCTS (NOT USED)

PART 3 - EXECUTION (NOT USED)

+ + END OF SECTION + +

SECTION 01451

TESTING LABORATORY SERVICES FURNISHED BY OWNER

PART 1 - GENERAL

1.1 DESCRIPTION

A. The OWNER will, through the ENGINEER, employ and pay for an independent testing laboratory to perform the specified services specified in the individual specification section.

B. The OWNER will pay for testing as required in the individual specification sections of the Contract Documents, except for repeat testing which results from CONTRACTOR'S negligence or his repeated failure to meet Contract Document requirements.

C. The testing laboratory is not authorized to approve or accept any portion of the Work; rescind, alter or augment the requirements of the Contract Documents; or perform any duties of CONTRACTOR.

1.2 QUALIFICATIONS OF LABORATORY

A. Where applicable, the testing laboratory will meet "Recommended Requirements for Independent Laboratory Qualification", latest edition, published by American Council of Independent Laboratories and the basic requirements of ASTM E 329 "Specification for Agencies engaged in Construction Inspection, Testing, or Special Inspection".

B. Testing equipment used by the laboratory will be calibrated at maximum twelve month intervals by devices of accuracy traceable to either National Bureau of Standards or accepted values of natural physical constants.

1.3 LABORATORY DUTIES

A. The testing laboratory shall:
   1. Cooperate with CONTRACTOR and provide qualified personnel promptly on notice.
   2. Perform specified inspections, sampling and testing of materials and methods of construction; comply with applicable standards; and ascertain compliance with requirements of Contract Documents.
   3. Promptly notify ENGINEER and CONTRACTOR of irregularities or deficiencies of Work that are observed during performance of services.

4. Promptly submit electronic copies of reports of inspections and tests to ENGINEER, including:
   a. Date issued.
   b. Project title and number.
   c. Testing laboratory name and address.
   d. Date of inspection or sampling.
   e. Record of temperature and weather.
   f. Date of test.
   g. Identification of product and Specification Section.
   h. Location in Project.
   i. Type of inspection or test.
   j. Results of tests and observations regarding compliance with Contract Documents.
5. Perform additional tests and services, as required by OWNER.

1.4 CONTRACTOR'S RESPONSIBILITIES

A. General:
   1. Cooperate with laboratory personnel and provide access to Work and to manufacturer's operations.
   2. Provide to laboratory, preliminary representative samples of materials to be tested, in required quantities.
   3. Furnish copies of product test reports.
   4. Provide to the laboratory the preliminary design mix proposed for concrete and other material mixes that require testing by the testing laboratory.
   5. Furnish labor and facilities:
      a. To provide access to Work to be tested.
      b. To obtain and handle samples at the site.
      c. To facilitate inspections and tests.
      d. For laboratory's exclusive use for storage and curing of test samples.
      e. Forms for preparing concrete test beams and cylinders.
   6. Notify laboratory and ENGINEER sufficiently in advance of operations to allow for assignment of personnel and scheduling of tests.
   7. Arrange with laboratory and pay for additional samples and tests required for CONTRACTOR'S convenience.

PART 2 - PRODUCTS (NOT USED)

PART 3 - EXECUTION (NOT USED)

+ + END OF SECTION + +

SECTION 01452

TESTING LABORATORY SERVICES FURNISHED BY CONTRACTOR

PART 1 - GENERAL

1.1 DESCRIPTION

A. The CONTRACTOR shall employ and pay for an independent testing laboratory to perform the specified services as required in various sections of the Contract Documents. Laboratory selected shall be subject to approval by the ENGINEER.

1.2 QUALIFICATIONS OF LABORATORY

A. Where applicable, meet "Recommended Requirements for Independent Laboratory Qualification," latest edition, published by American Council of Independent Laboratories and the basic requirements of ASTM E 329, "Standards of Recommended Practice for Inspection and Testing Agencies for Concrete and Steel as Used in Construction." Laboratory shall be authorized to operate in the State of Arizona.

B. Submit electronic copies of report of inspection of facilities made by Materials Reference Laboratory of National Bureau of Standards, for the most recent tour of inspection, with memorandum of remedies of any deficiencies reported by inspection.

C. Testing Equipment:
   1. Calibrated, at maximum 12-month intervals by devices of accuracy traceable to either National Bureau of Standards or accepted values of natural physical constants.
   2. Submit copy of certificate of calibration made by an accredited calibration agency.

1.3 LABORATORY DUTIES

A. Cooperate with ENGINEER and provide qualified personnel promptly on notice.

B. Perform specified inspections, sampling and testing of materials and methods of construction; comply with applicable standards; and ascertain compliance with requirements of Contract Documents.

C. Promptly notify ENGINEER and CONTRACTOR of any irregularities or deficiencies of Work that are observed during performance of services.

D. Promptly submit electronic copies of reports of inspections and tests to ENGINEER, including:
   1. Date issued.
   2. Project title and number.
   3. Testing laboratory name and address.
   4. Name and signature of inspector.
   5. Date of inspection or sampling.
   6. Record of temperature and weather.
   7. Date of test.
   8. Identification of product and Specification Section.
   9. Location in Work.
   10. Type of inspection or test.
   11. Results of tests and observations regarding compliance with Contract Documents.

E. Perform additional tests and services as required to ensure compliance with the Contract Documents.

1.4 CONTRACTOR'S COORDINATION WITH LABORATORY

A. Cooperate with laboratory personnel, and provide access to Work and to manufacturer's operations.

B. Provide to laboratory representative samples of materials to be tested, in quantities required by the laboratory for testing.

C. Furnish labor and facilities:
   1. To provide access to Work to be tested.
   2. To obtain and handle samples at the site.
   3. To facilitate inspections and tests.
   4. For laboratory's exclusive use for storage and curing of test samples.
   5. Forms for preparing concrete test beams and cylinders.

D. Notify laboratory and ENGINEER sufficiently in advance of operations to allow for assignment of personnel and scheduling of tests.

E. Arrange with laboratory and pay for, additional samples and tests required for CONTRACTOR'S convenience.

1.5 PRODUCT TEST REPORTS

A. Furnish copies of product test reports where required by the Specifications or requested by ENGINEER.

PART 2 - PRODUCTS (NOT USED)

PART 3 - EXECUTION (NOT USED)

+ + END OF SECTION + +

SECTION 01453

TESTING OF HYDRAULIC STRUCTURES

PART 1 - GENERAL

1.1 DESCRIPTION

A. Scope:
   1. Provide all labor, material, tools, equipment and incidentals as shown, specified and required to clean, flush and test structures.
   2. The Work also shall include all labor and materials required to prepare a structure for testing, convey water to the testing location, perform the testing, and all labor and materials required to drain and dispose of water used for testing.

B. Hydraulic Structures Scheduled for Hydrostatic Testing: Clean and test the following structures:

Hydraulic Structure Number	Hydraulic Structure Service and Location
Cast-in-Place Junction Structure B	Sanitary Sewer Structure North of 202 Freeway

C. Water for Testing:
   1. Water for initial testing will be furnished by the OWNER.
   2. Provide all temporary piping, hose, valves, backflow preventers, appurtenances, and services required for testing.
   3. Convey the water to the testing location.
   4. Water for testing may be withdrawn from:
      a. As directed by the OWNER and ENGINEER.
   5. The maximum rate at which water may be withdrawn is to be determined by the OWNER and ENGINEER. Provide on the withdrawal piping, downstream of the backflow preventer, a valve to control the rate of flow and a flow meter. The flow meter shall be calibrated within one year and field calibrated/verified prior to the date of its use, and its certification of calibration shall be submitted to the ENGINEER for approval.
   6. Cost of water for re-testing shall be paid by CONTRACTOR to OWNER at OWNER'S standard rates.

D. Testing and piping is specified under Section 15051, Buried Piping Installation.

1.2 DEFINITIONS

A. The term "hydraulic structures" is defined as tanks, channels, and other structures through which liquid is conveyed or that hold liquid. Hydraulic structures include structures that are open to the atmosphere and structures with closed tops. Hydraulic structures, include but are not limited to, wet wells, junction chambers equalization tanks, storage tanks, treatment process tanks such as grit chambers, clarifiers, aeration tanks, filter beds, contact tanks, and other channels or tanks as designated herein.
   1. Excluded are structures where cleaning and testing are specified under other Sections or contracts.

1.3 SUBMITTALS

A. Provide written notice of the proposed testing schedule for a given structure for review by the ENGINEER and OWNER at least 15 days prior to the scheduled testing. Include proposed plans for water conveyance, control, and disposal. Testing will not commence without approval of ENGINEER.

B. Shop Drawings: Submit for approval the following:
   1. Cleaning procedures.
   2. Hydrostatic testing procedures, methods, equipment, coordination, and schedules.
   3. Report for each test.
   4. Comply with the requirements of Section 01332, Shop Drawing Procedures.
   5. CONTRACTOR shall submit an electronic copy per Specification Section 01332, Shop Drawing Procedures. Text shall be in electronic ASCII format. Drawings and figures shall be in Version 2012 or newer AutoCAD ".dwg," or pdf ".pdf" format.
   6. A copy of this specification section, with addendum updates included, and all referenced and applicable sections, with addendum updates included, with each paragraph check-marked to indicate specification compliance or marked to indicate requested deviations from specification requirements. Check marks (✓) shall denote full compliance with a paragraph as a whole. If deviations from the specifications are indicated, and therefore requested by the CONTRACTOR, each deviation shall be underlined and denoted by a number in the margin to the right of the identified paragraph, referenced to a detailed written explanation of the reasons for requesting the deviation. The ENGINEER shall be the final authority for determining acceptability of requested deviations. The CONTRACTOR shall furnish equipment and/or services as specified if an exception and/or deviation is rejected. The remaining portions of the paragraph not underlined will signify compliance on the part of the CONTRACTOR with the specifications. Failure to include a copy of the marked-up specification sections, along with justification(s) for any requested deviations to the specification requirements, with the submittal shall be

sufficient cause for rejection of the entire submittal with no further consideration.

PART 2 - PRODUCTS

2.1 MATERIALS

A. Temporary valves, bulkheads, and other water control equipment and materials, shall be determined by CONTRACTOR subject to the ENGINEER'S review. No materials shall be used which would be injurious to the construction or its future function.

PART 3 - EXECUTION

3.1 CLEANING

A. Cleaning Requirements:
   1. Remove all scaffolding, planks, tools, rags, dirt, debris, and material not part of the structure prior to testing.
   2. Thoroughly clean the walls, floors, and operating equipment by sweeping, high-pressure wash, scrubbing, or other methods approved by ENGINEER.
   3. Remove all water, dirt, or foreign material accumulated during cleaning from the hydraulic structure. Provide temporary pumps, piping, and facilities as required to discharge water from the cleaning operation in a manner approved by ENGINEER.
   4. Do not proceed with testing until ENGINEER has approved the results of the cleaning operation.
   5. Cleaning shall conform to the requirements of Section 01740, Cleaning.

3.2 GENERAL FOR TESTING AND DISINFECTION

A. The following requirements apply:
   1. Each hydraulic structure shall be tested separately.

B. Hydraulic structures shall be free of visible leakage. Repair leaks in a manner subject to ENGINEER'S approval and in accordance with the Contract Documents.

C. The structure shall be tested after interior coating or linings system is installed, if applicable.

D. Release of water from structures, after testing shall be as approved by the ENGINEER. Release of water to City of Chandler sewer system is acceptable.

3.3 HYDROSTATIC TESTING OF HYDRAULIC STRUCTURES

A. Analysis of data from hydrostatic tests of hydraulic structures shall be performed by CONTRACTOR in accordance with the requirements of ACI 350.1 and as specified herein. Supply all materials and labor to obtain the test data. Two separate hydrostatic tests shall be completed, one using the stop logs and another without and using other means to retain the liquid contents within the structure.

B. Prior to the start of hydrostatic testing, the following shall be met.
   1. All elements of the structure that will resist pressure exerted by the retained liquid shall be in place and at specified strength levels. Concrete shall be fully cured.
   2. Structure walls shall not be backfilled and, if damp proofing is specified, coated with damp proofing prior to leakage testing, unless otherwise approved by ENGINEER.
   3. Stop logs that control the flow of or otherwise retain the liquid contents of the structure, shall be checked for water-tightness. If not watertight, provide measures to ensure water-tightness during the hydrostatic test.
   4. Defective concrete shall be repaired.
   5. Notify ENGINEER and OWNER a minimum of 24 hours prior to the start of filling of the structure for hydrostatic testing.
   6. Concrete hydraulic structures shall remain filled with clean water for an initial 48-hour period to allow for adsorption. Following this initial period, add make-up water to fill the hydraulic structure to the specified water surface test elevation.

C. Fill the hydraulic structure with clean water to ten (10) feet in elevation.

D. Filling Hydraulic Structures with Water:
   1. Fill the portion of the hydraulic structure to be tested at a rate not to exceed two vertical feet per hour.
   2. During filling, provide a backflow preventer at the point where water is withdrawn from the existing potable water system, if applicable.

E. After water has been brought to the test elevation and the specified wetting period has elapsed, inspect the exposed surfaces of the structure for leakage. Repair locations where leakage or weeping is evident prior to the start of hydrostatic testing.

F. Hydrostatic test duration shall be determined by the ENGINEER based on ACI 350.1, but shall not be less than 24 hours.

G. Allowable Leakage:
   1. Leakage is defined as the quantity of water that must be supplied to the hydraulic structure or any section thereof to maintain the water level within 3-

inches of the specified water surface test elevation during the hydrostatic test, plus the amount of water required to fill the hydraulic structure to the specified water surface test elevation at the conclusion of the hydrostatic test, plus precipitation, minus an allowance for evaporation if applicable.

2. For concrete structures with interior wetted surfaces lined with a waterproof material, the allowable leakage is 0.0 (zero) percent of the volume tested per 24-hour period.

H. Measurement Locations:
1. Structures or structure cells that are less than 1,000 square feet in water surface area shall have measurements of water level taken at a minimum of two locations that are approximately 180 degrees apart.
2. Structures or structure cells that are greater than 1,000 square feet in water surface area shall have measurements of water level taken at a minimum of four locations that are approximately 90 degrees apart.
3. Each measurement location shall be marked and given a reference number. A reference point shall be marked on the face of the wall above the test water surface in a manner that will prevent movement or deterioration of the reference point mark during the test.
4. Measurement locations shall be located so that the effects of wave action and wind are minimized.

I. Evaporation and Precipitation Measurement:
1. In hydraulic structures that are open to the atmosphere, a clear plastic calibrated open-topped container not less than 18-inches in diameter and depth shall be partially filled, floated in the tank, and held in position near each measurement location. Calibration increments shall be 0.1-inch or less.
2. Containers shall be located so that they are not shaded by the structure's walls, and are away from overhead items such as beams, pipes, and walkways.

J. Test Measurements:
1. Do not start hydrostatic tests when severe weather conditions, such as heavy precipitation, high winds, major changes in average daily temperature, and other severe conditions are predicted.
2. Record the following measurements at each test location at the start of the test period and at 12-hour intervals thereafter.
   a. Distance from reference point to test water surface.
   b. Depth of water in the evaporation-precipitation containers.
   c. Temperature of the test water at a point 18-inches below the water surface.
   d. Temperature of the water in the evaporation-precipitation containers at mid-depth.
3. If the water surface is subject to wave action at the measurement location, the average water surface elevation of the wave oscillations shall be recorded as the data.

4. The change in the water surface elevation at each measurement location shall be averaged and adjusted as follows:
   a. The total change in the hydraulic structure's water surface elevation shall be adjusted by the average change in water surface elevation in the evaporation-precipitation containers.
   b. Where the averaged water temperature measurements vary by more than 3 degrees from start to completion of the test period, adjustment in the test volume shall be determined by the change of the density of water resulting from the change in the average water temperature.
5. Determination of Leakage:
   a. Provide a test container filled with a known quantity of water at the start of the test. Attach the test pump suction to the test container.
   b. Pump water from the test container into the hydraulic structure with the test pump to maintain the water level in the hydraulic structure within 3-inches of the specified test elevation for the duration of the test period.
   c. At the conclusion of the test, pump water from the container into the hydraulic structure to attain the specified test elevation.
   d. Measure the water remaining in the container and record the amount used during the test on the test report.

K. Criteria for Acceptance:
1. The hydrostatic test will pass if the measured leakage is less than the allowable leakage and no leaks or weeping are observed.
2. The hydrostatic test shall be considered to have failed if the allowable leakage is exceeded or if leakage or weeping is observed.
3. If the test becomes unreliable due to excessive precipitation or other external factors, the test shall be re-started.
4. If a hydrostatic test fails, the structure may be re-tested immediately without repairs if approved by the ENGINEER. If the subsequent hydrostatic test fails, repair probable areas of leakage and repeat the hydrostatic test.
5. Re-test the structure until it meets the specified criteria for acceptance. Repair probable leakage areas before testing.

L. Reuse and Disposal of Water Used in Hydrostatic Tests:
1. Obtain written approval of the ENGINEER before water used in one hydrostatic test is pumped to a different hydraulic structure for reuse in a subsequent test.

M. The hydraulic structure shall not be backfilled or damp-proofed until acceptance of the hydrostatic test by the ENGINEER.

3.4 TESTING OF APPURTENANT PIPING

A. Piping appurtenant to hydraulic structures shall be tested as specified in applicable Sections.

++ END OF SECTION ++

SECTION 01570

TEMPORARY CONTROLS

PART 1 - GENERAL

1.1 DESCRIPTION

A. CONTRACTOR shall provide and maintain methods, equipment, and temporary construction, as necessary to provide controls over environmental conditions at the construction site and adjacent areas. Remove physical evidence of temporary facilities at completion of Work.

B. CONTRACTOR shall obtain all City, County and State permits required for the construction of all Work, including Hazardous Material Management, Earth Moving/Dust Control and Storm water/Storm water Pollution Prevention Permits.

1.2 NOISE CONTROL

A. CONTRACTOR'S vehicles and equipment shall be such as to minimize noise to the greatest degree practicable. Noise levels shall conform to the latest OSHA standards and in no case will noise levels be permitted which interfere with the Work of the OWNER or others.

1.3 PEST AND RODENT CONTROL

A. Provide rodent and pest control as necessary to prevent infestation of construction or storage areas.
   1. Employ methods and use materials that will not adversely affect conditions at the site or on adjoining properties.

1.4 WATER CONTROL

A. Provide methods to control surface water and water from excavations and structures to prevent damage to the Work, the site, or adjoining properties.
   1. Control fill, grading and ditching to direct water away from excavations, pits, tunnels and other construction areas and to direct drainage to proper runoff courses so as to prevent any erosion, damage or nuisance.

1.5 EROSION CONTROL

A. Plan and execute construction and earth work by methods to control surface drainage from cuts and fills, and from borrow and waste disposal areas, to prevent erosion and sedimentation.

1. Hold the areas of bare soil exposed at one time to a minimum.
2. Provide temporary control measures such as berms, dikes and drains.

B. Construct fills and waste areas by selective placement to eliminate surface silts or clays which will erode.

C. Periodically inspect earthwork to detect any evidence of the start of erosion; apply corrective measures as required to control erosion.

PART 2 - PRODUCTS (NOT USED)

PART 3 - EXECUTION (NOT USED)

+ + END OF SECTION + +

SECTION 01722

FIELD ENGINEERING

PART 1 - GENERAL

1.1 DESCRIPTION

A. The CONTRACTOR will establish a base line for the Project and two benchmarks for use by the ENGINEER and CONTRACTOR during the project. The ENGINEER and CONTRACTOR will coordinate the location of the benchmarks and base line to suit the Work.

B. CONTRACTOR shall:
   1. Develop and make all detail surveys and measurements needed for construction including slope stakes, batter boards, and all other working lines, elevations and cut sheets.
   2. Provide all material required for bench marks, control points, batter boards, grade stakes, structure and pipeline elevation stakes, and other items.
   3. Be solely responsible for all locations, dimensions and levels. No data other than written orders of the ENGINEER shall justify departure from the dimensions and levels required by the Contract Documents.
   4. Safeguard all points, stakes, grade marks, monuments and bench marks made or established on the Work. Re-establish same with the exception of primary control monuments if disturbed and rectify all Work improperly installed because of not maintaining, not protecting or removing without authorization established points, stakes, marks and monuments.
   5. Provide such facilities and assistance as may be necessary for ENGINEER to check line and grade points placed by CONTRACTOR. Do not perform any excavation or embankment work until all cross-sectioning necessary for determining pay quantities has been completed and checked by ENGINEER.
   6. CONTRACTOR shall provide notices and comply with all laws, ordinances, rules and regulations bearing on the conduct of the Work. If CONTRACTOR observes that the Contract Documents are at variance therewith, promptly notify the ENGINEER, in writing.

1.2 CONTRACTOR'S DAILY REPORTS

A. CONTRACTOR shall provide:
   1. Provide daily reports of Project activity. Reports to be submitted to the ENGINEER with all pertinent information pertaining to the project as follows:
      a. Number of employees.
      b. Subcontractor employees.

c. Breakdown of employees by trades.
d. Major equipment and materials installed.
e. Major construction equipment utilized, in use and standby.
f. Location of all areas in which construction was done.
g. Materials and equipment received.
h. Work and tests performed.
i. Safety.
j. Delays.

2. CONTRACTOR shall submit electronic copies of CONTRACTOR'S daily reports. The daily report is due at the ENGINEER'S field office by 9:00 a.m. the next working day after the Work was performed and shall be signed by a responsible member of CONTRACTOR'S staff.
3. CONTRACTOR shall check all formwork, reinforcing, inserts, structural steel, bolts, sleeves, piping, other materials and equipment.
4. CONTRACTOR shall maintain field office files and drawings, Record Drawings, and coordinate engineering services with subcontractors. Prepare layout and coordination drawings for construction operations.
5. CONTRACTOR shall check and coordinate Work for conflicts and interferences and immediately advise ENGINEER of all discrepancies noted.
6. CONTRACTOR shall cooperate with ENGINEER in field inspections, as required.
7. CONTRACTOR shall review and coordinate Shop Drawings and other submittals.

1.3 CONTRACTOR'S SURVEYOR

A. CONTRACTOR shall employ and retain, as needed at the Work site a surveyor with the experience and capability of performing all surveyor and layout tasks required of CONTRACTOR. It is also the CONTRACTOR'S responsibility to notify the ENGINEER, in writing, of any discrepancy found between the topographic survey provided and the baseline conditions provided in the Contract. The surveyor shall be a land surveyor registered in the State of Arizona. Tasks included are:
1. CONTRACTOR shall provide all surveying equipment required including transit, level, stakes and required surveying accessories.
2. CONTRACTOR shall furnish all required lines and grades for construction of all facilities, structures, pipelines and site improvements.
3. CONTRACTOR shall keep professional, accurate, well organized, and legible notes of all measurements and calculations made while surveying and laying out the Work.
4. CONTRACTOR shall survey, locate, and record and redline Drawings to accurately represent all utilities and buried structures prior to backfilling.
5. CONTRACTOR will report to the OWNER whenever any reference point is lost or destroyed or requires relocation because of necessary changes in grades or locations. The CONTRACTOR will replace and accurately relocate all

reference points so lost, destroyed, or moved at no additional cost to the OWNER

B. Field surveying shall include GIS location and data of all new construction as required by the City of Chandler. The CONTRACTOR shall provide the GIS location and data at each application of payment to verify content. If data is missing or does not meet City of Chandler requirements, portions of the new construction shall be exposed to obtain the data at no additional cost to the OWNER. The City of Chandler requirements are identified below:
   1. Contractor shall provide survey grade GPS / GIS data, per Exhibit F of the contract.

C. Refer to the included information, following this specification, from the City of Chandler. Contractor shall meet all requirements. Any primary control survey monuments damaged or destroyed, will be re-established by the ENGINEER, at CONTRACTOR'S expense.

D. CONTRACTOR shall perform such surveys and computations as are necessary to determine quantities of Work performed or placed during each progress payment period, and shall perform all surveys necessary for the ENGINEER to determine final quantities of Work in place.

E. CONTRACTOR shall notify the ENGINEER at least 24 hours before performing a quantity survey and, unless waived in writing by the ENGINEER, quantity surveys shall be performed in the presence of the ENGINEER.

F. From established primary control points, establish all lines and grades, and elevations necessary to control the Work, and shall be responsible for all measurements that may be required for execution of the Work to the tolerances prescribed in the Contract Documents.

G. Establish, place, and replace as required, such additional stakes, markers, and other controls as may be necessary for control, intermediate checks, and guidance of construction operations.

H. Upon completion of sewer line installation and prior to backfill, CONTRACTOR shall survey and provide survey point data for all sewer piping inverts at a minimum of 25-ft intervals on straight runs. CONTRACTOR shall provide a point file identifying location by northing, easting, and elevation and be included with the as-built documents in AutoCAD format.

I. Upon completion of the final grade, CONTRACTOR shall perform a survey as-built of the project disturbed areas to confirm that the final grade matches the contract drawings. The survey shall be at 1-foot contours and shall identify all exposed

manhole lids (center), manhole center, structure corners, ADOT retaining wall, irrigation equipment, and ADOT irrigation ditch. The CONTRACTOR shall submit the point file and a base file to the ENGINEER with the as-built drawings. In the event the finished grade determined by the survey does not match the contract drawings or if there are low spots that cause a drainage issue such as ponding, the CONTACTOR shall re-grade the area at their own expense until the area is corrected and satisfied by the ENGINEER and OWNER.

1.4 SURVEYING

A. CONTRACTOR shall follow the following construction surveying guidelines for this project:
   1. Alignment Staking: Each 50 feet on tangent; each 25 feet on curves.
   2. Slope Staking: Each 50 feet on tangent; each 25 feet on curves; restake every 10 feet in elevation.
   3. Structure: Stake out structures, including elevations; checkouts prior to and during construction.
   4. Pipeline: Stake out pipelines including elevations; checkout prior to and during construction. Survey shots shall be taken on pipeline change of elevation and direction and shall be as-built.
   5. Cross-Section: Original, final and intermediate as required, for the structure sites and other locations as necessary for quantity surveys..
   6. Survey shots shall be taken on all duct bank change of elevation and direction and shall be as-built.

B. Temporary survey references set by CONTRACTOR for CONTRACTOR'S own use shall be established to at least second order accuracy (e.g., 1:10000). Construction staking used as a guide for the actual Work shall be set at least third order accuracy (e.g., 1:5000). The basis on which such orders are established shall be sufficient to provide the absolute margin for error specified below.

C. The horizontal accuracy of easement staking shall be plus or minus 0.1 feet. The accuracy of all other staking shall be plus or minus 0.04 feet horizontally and plus or minus 0.02 feet vertically.

D. Survey calculations shall include an error analysis sufficient to demonstrate the required accuracy.

E. Survey Records:
   1. Maintain a complete, accurate log of all control and survey Work as it progresses.
   2. All survey data shall be in accordance with recognized professional surveying standards. All original field notes, computations, and other surveying data shall be recorded by CONTRACTOR'S surveyor in CONTRACTOR furnished hard-

bound field books, and shall be signed and sealed by CONTRACTOR'S surveyor. The completeness and accuracy of all survey Work, and the completeness and accuracy of the survey records, including the field books, shall be the responsibility of CONTRACTOR. Failure to organize and maintain survey records in a professional manner to allow reasonable and independent verification of all calculations by the ENGINEER, and to allow reasonable identification by the ENGINEER of all elevations, dimensions, and grades of the Work shall be cause for rejection of the survey records, including the field books.

3. Illegible notes or data, or erasures on any page of the field books are not acceptable. Copied notes or data shall not be permitted. Corrections by ruling or lining out errors will be satisfactory only if initialed by the surveyor. Violation of the above may require resurveying the data in question.

F. Survey Submittal:
   1. Survey submittal shall be made as described herein. Submittal shall be signed and sealed by CONTRACTOR'S surveyor and shall include:
      a. A complete survey plan that shall be submitted ten days prior to beginning survey Work.
      b. Resumes shall be submitted of the Registered Land Surveyors conducting the Work ten days prior to beginning survey Work. During the course of the Work, a resume shall be submitted for each new Registered Land Surveyor working on the project at least ten days prior to the beginning of Work by such new Registered Land Surveyor.
      c. A sample of the proposed survey field books to be maintained by CONTRACTOR'S surveyor. The sample shall have sufficient information and detail, including example calculations and notes, to demonstrate that the field books will be organized and maintained in a professional manner, meeting the requirements of Article 1.3 and Article 1.4 of this Section.
      d. The original field books shall be submitted within two days upon completion of the Work.

1.5 SOILS AND MATERIAL TESTING

A. Refer to Section 01452, Testing Laboratory Services Furnished by CONTRACTOR for Soils and Materials Testing.

PART 2 - PRODUCTS (NOT USED)

PART 3 - EXECUTION (NOT USED)

+ + END OF SECTION + +

SECTION 01723

CUTTING AND PATCHING

PART 1 - GENERAL

1.1 DESCRIPTION

A. This Section includes administrative and procedural requirements for the cutting and coring, and rough and finish patching of holes and openings in existing construction.

B. The CONTRACTOR shall adhere to all applicable safety guidelines in accordance with Federal, State and local ordinances.

C. All cutting, coring and rough patching shall be performed by CONTRACTOR requiring the opening. Finish patching shall be the responsibility of CONTRACTOR and shall be performed by the trade associated with the application of the particular finish.

D. CONTRACTOR shall provide cutting, coring, fitting and patching, including attendant excavation and backfill required to complete the Work, or to:
   1. Remove and replace defective Work or Work not conforming to requirements of the Contract Documents.
   2. Remove samples of installed Work as specified or required for testing.
   3. Remove all constructions required to provide for specified alterations or addition to existing work.
   4. Uncover Work to provide for ENGINEER'S observation of covered Work or observation by regulatory agencies having jurisdiction.
   5. Connect to completed Work that was not accomplished in the proper sequence.
   6. Remove or relocate existing utilities and pipes that obstruct the Work in locations where connections must be made.
   7. Make connections or alterations to existing or new facilities.

E. CONTRACTOR shall coordinate the requirements of the Work in this Section along with the requirements of the Sections listed below which includes Work that is directly related to this Section.
   1. Division 2, Site Work, through 15, Mechanical, Sections for specific requirements and limitations applicable to cutting and patching individual parts of the Work.

1.2 QUALITY ASSURANCE

A. Structural Work: CONTRACTOR shall not cut or patch structural elements in a manner that would change their load-carrying capacity as load-deflection ratio.

B. Operating Elements: CONTRACTOR shall not cut or patch operating elements in a manner that would result in reducing their capacity to perform as intended. Do not cut or patch operating elements or related components in a manner that would result in increased maintenance or decreased operational life or safety.

1.3 SUBMITTALS

A. CONTRACTOR shall submit a written request to ENGINEER well in advance of executing any cutting or alteration which affects:
   1. Design function or intent of Project.
   2. Work of OWNER or any other contractor.
   3. Structural value or integrity of any element of the Project.
   4. Integrity or effectiveness of weather-exposed or moisture-resistant elements or systems.
   5. Efficiency, operational life, maintenance or safety of operational elements.
   6. Visual qualities of sight-exposed elements.

B. Request shall include:
   1. Identification of Project.
   2. Description of affected Work of CONTRACTOR and work of others.
   3. Necessity for cutting.
   4. Effect on work of OWNER or any other contractor, or on structural or weatherproof integrity of Project.
   5. Description of proposed Work, describing:
      a. Scope of cutting and patching.
      b. Trades who will be executing the Work.
      c. Products proposed to be used.
      d. Extent of refinishing.
      e. Schedule of operations.
   6. Alternatives to cutting and patching, if any.
   7. Designation of party responsible for cost of cutting and patching, when applicable.
   8. Written permission of any other contractor whose work will be affected.

C. Should conditions of Work, or schedule, CONTRACTOR shall indicate a change of materials or methods, submit written recommendation to ENGINEER, including:
   1. Conditions indicating change.
   2. Recommendations for alternative materials or methods.
   3. Submittals as required for substitutions.

D. CONTRACTOR shall submit written notice to ENGINEER, designating time Work will be uncovered, to provide for observation. Do not begin cutting or patching operations until authorized by ENGINEER.

E. CONTRACTOR shall conform to all applicable specifications for application and installation of materials used for patching.

F. CONTRACTOR shall submit electronic copy per Specification Section 01332, Shop Drawing Procedures.

1.4 WARRANTY

A. CONTRACTOR shall replace, patch and repair materials and surfaces cut or damaged during cutting and patching operations, by methods and with materials in such a manner as to not void required or existing warranties.

PART 2 - PRODUCTS

2.1 MATERIALS, GENERAL

A. Use materials identical to existing materials. For exposed surfaces, use materials that visually match existing adjacent surfaces to fullest extent possible. If identical materials are unavailable or cannot be used, use materials whose installed performance will equal or surpass that of existing materials.

PART 3 - EXECUTION

3.1 GENERAL

A. Perform all cutting and coring in such a manner as to limit the extent of patching.

B. Core drill all holes to be cut through concrete and masonry walls, slabs or arches, unless otherwise approved by the ENGINEER.

3.2 INSPECTION

A. Examine surfaces to be cut and patched and conditions under which cutting and patching are to be performed before cutting.

B. Report unsatisfactory or questionable conditions to ENGINEER, in writing. Do not proceed with Work until the ENGINEER has provided further instructions.

3.3 PREPARATION

A. Provide temporary support as required to maintain structural integrity of Project, to protect adjacent Work from damage during cutting, and to support the Work to be cut.

B. Protect existing construction during cutting and patching to prevent damage. Provide protection from adverse weather conditions for portions of the Project that will be exposed during cutting and patching operations.
   1. Avoid interference with use of adjoining areas or interruption of free passage to adjoining areas.
   2. Do not cut existing pipe, conduit or ductwork serving facilities scheduled to be removed or relocated until provisions have been made to bypass them.

3.4 CORING

A. Perform coring with a non-impact rotary tool using diamond core drills. Size holes for pipe, conduit, sleeves, equipment or mechanical seals, as required.

B. Protect existing equipment, utilities and adjacent areas from water and other damage covered by drilling operations.

C. Vacuum or otherwise remove slurry or tailings from the Work area following drilling.

3.5 CUTTING

A. Cut existing construction using methods least likely to damage elements retained or adjoining construction and that will provide proper surfaces to receive installation or repair.
   1. In general, use hand or small power tools designed for sawing or grinding, not hammering and chopping.
   2. Cut through concrete and masonry using a concrete wall saw with diamond saw blades.
      a. Provide for control, on both sides of walls, of slurry generated by sawing.

B. Cut holes and slots as small as possible, neatly to size required, and with minimum disturbance of adjacent surfaces. Provide temporary covering over openings where not in use.

C. To avoid marring existing finished surfaces, cut or drill from exposed or finished side into concealed side.

D. Provide adequate bracing of area to be cut prior to start of cutting.

E. Provide equipment of adequate size to remove cut panel.

3.6 PATCHING

A. Patch construction by filling, repairing, refinishing, closing-up and similar operations following performance of other Work. Patch with durable seams that are as invisible

as possible. Provide materials and comply with installation requirements specified, in other Sections of these Specifications.

B. Where feasible, test patched areas to demonstrate integrity of installation.

C. Fit Work airtight to pipes, sleeves, ducts, conduit and other penetrations through surfaces.

D. Restore exposed finishes of patched areas and extend finish restoration into retained adjoining construction in a manner that will eliminate evidence of patching and refinishing.
   1. For continuous surfaces, refinish to nearest intersection.
   2. For an assembly, refinish entire unit.

E. Patch, repair or rehang existing ceilings as necessary to provide an even-plane surface of uniform appearance.

3.7 CLEANING

A. Clean areas and spaces where cutting, coring and patching are performed. Clean piping, conduit or similar constructions before applying paint or other finishing materials. Restore damaged pipe covering to original condition.

+ + END OF SECTION + +

SECTION 01740

CLEANING

PART 1 - GENERAL

1.1 DESCRIPTION

A. Execute cleaning, during progress of the Work, at completion of the Work, and as required by General Conditions. If CONTRACTOR fails to clean areas as specified in this Section, the OWNER will have the areas cleaned and backcharge CONTRACTOR.

1.2 REQUIREMENTS OF REGULATORY AGENCIES

A. In addition to the requirements herein, maintain the cleanliness of the Work and surrounding premises within the Work limits so as to comply with federal, state, and local fire and safety laws, ordinances, codes and regulations.

B. Comply with all federal, state and local anti-pollution laws, ordinances, codes and regulations when disposing of waste materials, debris and rubbish.

1.3 PROGRESS CLEANING

A. General: Clean the Site, Work areas and other areas CONTRACTOR is permitted to occupy by Laws and Regulations at least weekly. Dispose of materials lawfully according to Laws and Regulations:
   1. Comply with requirements in NFPA 241, Standard for Safeguarding Construction, Alteration and Demolition Operations, for removal of combustible waste materials and debris.
   2. Do not hold other materials more than three days if the temperature is expected to rise above 80° F.
   3. Provide suitable containers for storage of waste materials and debris.
   4. Containerize hazardous and unsanitary waste materials separately from other waste. Mark containers appropriately.

B. Project:
   1. Maintain Project free of waste materials and debris.
   2. Keep exterior dust generating areas wetted down.

C. Work Areas: Clean areas where Work is in progress to the level of cleanliness necessary for proper execution of the Work.
   1. Remove liquid spills promptly and report spills to the OWNER and ENGINEER immediately.

2. Where dust would impair proper execution of the Work, broom-clean or vacuum the entire Work area, as appropriate.

D. Installed Work: Keep installed Work clean. Clean installed surfaces according to written instructions of manufacturer or fabricator of product installed, using only cleaning materials specifically recommended. If specific cleaning materials are not recommended, use cleaning materials that are not hazardous to health or property and that will not damage exposed surfaces.

E. Concealed Spaces: Remove all debris from concealed spaces before enclosing the space.

F. Exposed Surfaces: Clean exposed surfaces and protect as necessary to ensure freedom from damage and deterioration at time of Substantial Completion.

G. Cutting and Patching: Clean areas and spaces where cutting and patching are performed. Completely remove paint, mortar, oils, putty, and similar materials.
   1. Thoroughly clean piping, conduit, and similar features before applying paint or other finishing materials. Restore damaged pipe covering to its original condition.

H. Waste Disposal:
   1. Properly dispose of all waste materials, surplus materials, debris and rubbish off the Project site.
   2. Do not burn or bury rubbish and waste materials on the Project site.
   3. Do not dispose of volatile or hazardous wastes such as mineral spirits, oil, or paint thinner in storm or sanitary drains.
   4. Do not discharge wastes into streams or waterways.
   5. Sole responsibility for complying with any federal, state, and local environmental and regulations in disposing of waste, belongs to CONTRACTOR.

I. During handling and installation, clean and protect construction in progress and adjoining materials already in place. Apply protective covering where required to ensure protection from damage or deterioration at Substantial Completion.

J. Clean and provide maintenance on completed construction as frequently as necessary through the remainder of the construction period. Adjust and lubricate operable components to ensure operability without damaging effects.

1.4 FINAL CLEANING

A. General: Provide final cleaning.
   1. Complete the following cleaning and waste-removal operations before requesting inspection for certification of Substantial Completion for entire Project or for a portion of Project:

a. Clean and remove from the Project rubbish, waste material, debris, and other foreign substances.
b. Mechanical sweeping of paved areas. Remove petrochemical spills, stains, and other foreign deposits.
c. Hose clean sidewalks and loading areas.
d. Rake grounds that are neither planted nor paved to a smooth, even-textured surface.
e. Leave water courses, gutters, and ditches open and clean.
f. Repair pavement, roads, sod, and all other areas affected by construction operations and restore them to original condition or to minimum condition specified.
g. Clean exposed exterior and interior hard-surfaced finishes to a dirt-free condition, free of spatter, grease, stains, fingerprints, films, and similar foreign substances.
h. Clean, wax and polish wood, vinyl and painted floors.
i. Remove debris and surface dust from limited access spaces, including roofs, plenums, shafts, trenches, equipment vaults, manholes, and similar spaces.
j. Sweep concrete floors broom clean in unoccupied spaces.
k. Clean transparent materials, including mirrors and glass in doors and windows. Remove glazing compounds and other noticeable, vision- obscuring materials. Replace chipped or broken glass and other damaged transparent materials.
l. Remove tags and labels that are not permanent.
m. Touch up and otherwise repair and restore chipped, scratched, dented or otherwise marred surfaces to specified finish and match adjacent surfaces.
    1) Do not paint over “UL” or similar labels, including manufacturer mechanical and electrical nameplates.
n. Wipe surfaces of mechanical and electrical equipment, and similar equipment. Remove excess lubrication, paint and mortar droppings, and other foreign substances.
o. Clean plumbing fixtures to a sanitary condition, free of stains, including stains resulting from water exposure.
p. Replace disposable air filters and clean permanent air filters. Clean exposed surfaces of diffusers, registers, and grills.
q. Clean light fixtures, lamps, globes, and reflectors to function with full efficiency. Replace burned-out bulbs, and those noticeably dimmed by hours of use, and defective and noisy starters in fluorescent and mercury vapor fixtures to comply with requirements for new fixtures.
r. Maintain the cleaning until OWNER occupies the Project or portion thereof.
s. Leave Project clean and in a neat and orderly condition satisfactory to ENGINEER.

PART 2 - PRODUCTS (NOT USED)

PART 3 - EXECUTION (NOT USED)

+ + END OF SECTION + +

SECTION 01782

RECORD DOCUMENTS

PART 1 - GENERAL

1.1 DESCRIPTION

A. CONTRACTOR shall maintain and provide the ENGINEER with Record Documents as specified below and per the General Conditions of the contract.

B. Definitions
   1. Contract Documents: The contract documents include the drawings, specifications, and addenda developed and furnished to the CONTRACTOR at the beginning of construction.
   2. As-Built Drawings: As-built drawings are an annotated set of drawings prepared by the CONTRACTOR. They show, in red, as-constructed changes to the original Contract Documents that have been made during the construction process. The As-Built Drawings may include supplemental drawings to provide the necessary detail, comply with project standards or where annotation would otherwise be impractical.
   3. Record Drawings: Record Drawings are prepared by the ENGINEER and reflect as-constructed changes that the CONTRACTOR annotated in the As-Built Drawings.
   4. Record Documents: The Record Documents include Record Drawings, specifications, addenda, approved shop drawings, samples, photographs, change orders, other modifications to the Contract Documents, test records, survey data, field orders, Request for Information, submittals and all other documents pertinent to the CONTRACTOR'S Work.

C. Maintenance of Documents:
   1. Electronic sets of plans, including any Addenda, of the Drawings will be furnished to CONTRACTOR by the ENGINEER.
   2. Maintain in CONTRACTOR'S field office in clean, dry, legible condition complete sets of the following: Drawings, Specifications, Addenda, approved Shop Drawings, Samples, Photographs, Change Orders, other modifications of Contract Documents, test records, survey data, Field Orders, and all other documents pertinent to CONTRACTOR'S Work.
   3. Make documents available at all times for inspection by ENGINEER and OWNER.
   4. Record Documents shall not be used for any other purpose and shall not be removed from CONTRACTOR'S office without ENGINEER'S approval.

5. Any contractually required testing provided by others shall be thoroughly documented by the CONTRACTOR and maintained with the project Record Documents. All testing results shall be maintained in their own separate log for the project; being kept current weekly and made readily available for viewing at any time.

D. Marking System: Changes, revisions, additions and deletions, to the record set of Drawings shall be marked in Red.

E. Recording:
1. Submit as-built drawings and make a record of the locations of all work completed as part of the project. The as-builts must indicate the locations of the beginning(s) and end(s) of the construction, and service connections and appurtenances. They must also show locations and elevations where significant elevation changes occur or changes in direction in all pipe alignments. Their locations must be shown by stationing and dimensioning from appropriate monument lines or in their absence appropriate lot lines, property lines or easement line references.
2. Label the Cover Sheet, Index and each supplemental sheets of each document "PROJECT RECORD" in 2-inch high printed letters.
3. Keep the As-Built Drawings current. CONTRACTOR'S refusal, failure or neglect to maintain current As-Built Drawings shall constitute sufficient basis for the ENGINEER to recommend the withholding of some or all of any payment due.
4. Do not permanently conceal any Work until required information has been recorded.
5. Drawings: Legibly mark to record actual construction including:
   a. Depths of various elements of foundation in relation to datum.
   b. Horizontal and vertical location of underground utilities and appurtenances referenced to permanent surface improvements.
   c. Location of internal utilities and appurtenances concealed in construction referenced to visible and accessible features of structure.
   d. Field changes of dimensions and details.
   e. Changes made by Change Order or Field Order.
   f. Details not on original Drawings.
6. Specifications and Addenda: Legibly mark up each Section to record:
   a. Manufacturer, trade name, catalog number, and supplier of each product and item of equipment actually installed.
   b. Changes made by Change Order or Field Order.
   c. Other matters not originally specified.

F. Record Drawings:
1. Record Drawings shall be prepared for all the Work included in the Contract. On a monthly basis, furnish to the ENGINEER a full size annotated electronic copy

of the As-Build Drawings that include changes from the previous month's As-Build Drawing submittal. Annotations shall include redlined "clouds" of only those changes from the previous month's submittal. The redlined As-Build Drawings shall show the actual in-place installation of the items installed under this Contract. The redlined As-Build Drawings shall show the Work in plan and sections as required for clarity with reference dimensions and elevations that will be used to develop complete Record Drawings.

2. In addition to the redlined As-Build Drawings, prepare and submit CADD ".dwg" files, version 2018 or later, for all supplemental drawings used to complete the As-Build Drawings.
3. Survey results shall be posted to the as-builts on a monthly basis.

G. Submittals:
1. Acceptance of CONTRACTOR'S monthly application for payment shall be dependent on the ENGINEER'S acceptance and agreement that CONTRACTOR'S As-Build Drawings and weekly submittals are complete, thorough and acceptable in showing all Work up through and including such work as CONTRACTOR is claiming for completion and payment on CONTRACTOR'S application for payment. Any items which do not appear on the As-Build Drawings in complete and acceptable form shall not be paid for in CONTRACTOR'S monthly payment.
2. Examination by the ENGINEER of CONTRACTOR'S As-Build Drawings will be made on a weekly basis to determine completion for consideration of monthly pay application. Also, make available all As-Build Drawings at all times to the ENGINEER for examination.
3. Prior to Completion of the Work, deliver final As-Build Drawings to ENGINEER.
4. Accompany final and weekly submittals with transmittal letter containing:
   a. Date.
   b. Project title and number.
   c. CONTRACTOR'S name and address.
   d. Title and number of each As-Build Drawings.
   e. Certification that each document as submitted is complete and accurate.
   f. Signature of CONTRACTOR, or his authorized representative.

PART 2 - PRODUCTS (NOT USED)

PART 3 - EXECUTION (NOT USED)

+ + END OF SECTION + +

SECTION 02145
DIVERSION OF SEWAGE FLOW AND DEWATERING

PART 1 - GENERAL

1.1 DESCRIPTION

A. Scope:
   1. This Section describes the existing conditions for temporary bypassing and dewatering of water systems or sewers for internal television inspection (CCTV), cleaning operations and/or rehabilitation of project pipelines. This section provides minimum requirements for temporary bypass pump station and dewatering of sewers as required to completing work and prior to acceptance.

B. Requirements:
   1. CONTRACTOR shall provide all labor, materials, equipment, and supervision to temporarily bypass pump sewage flow around the CONTRACTOR'S Work and to dewater the pipeline for removal. The bypass strategy shall maintain flow to prevent wastewater backup into the city's sewage collection system or discharge to the environment.
   2. The actual design of the bypass arrangement shall be prepared by the CONTRACTOR, and shall be submitted to the OWNER and ENGINEER for review. Means and methods of accomplishing the bypassing shall be the responsibility of the CONTRACTOR.
   3. The CONTRACTOR shall successfully test the system to 1.5 times the maximum operating pressure of the system prior to placing the bypass system into operation,
   4. The CONTRACTOR shall notify the OWNER 72 hours prior shutting down or operating the bypass. The bypass system equipment and existing flows shall be continuously monitored by the CONTRACTOR.
   5. It is the CONTRACTOR's responsibility to arrange all necessary access and temporary construction agreements with all affected parties for the Contractor's proposed location of the bypass pumping system
   6. CONTRACTOR is responsible for immediate and proper cleanup should any spill occur, regardless of amount. Immediately contact the ENGINEER if spill occurs. Regardless if amount, the CONTRACTOR shall pay for all damages and fines incurred as a result of a spill.
   7. CONTRACTOR shall connect bypass piping to the existing collection system and utilize temporary pumps and control equipment.
   8. CONTRACTOR shall utilize a pumping system with 100% back-up capability. In the event a pump shall fail, an alternate equally sized pump shall be ready to be utilized immediately. This requires the alternate pump(s) to be connected to the force main system.

9. CONTRACTOR shall coordinate operation of temporary bypass pump station with authorized City of Chandler personnel. CONTRACTOR shall not operate any equipment in or about temporary bypass pump station without prior written consent from OWNER and copied to ENGINEER.
10. Bypass pump operation shall include a lighting system at the bypass pump operation and the force main discharge. The lighting system shall be gas operated.
11. CONTRACTOR shall provide qualified personnel, at a minimum two (2), on-site 24 hours per day to maintain the bypass pumps and pipeline.
12. CONTRACTOR shall continuously monitor hydrogen sulfide concentrations at the suction side of the bypass pump operation and the force main discharge. CONTRACTOR shall provide temporary covering at each location to minimize hydrogen sulfide releases. This may include providing and installing a temporary odor control system as determined by the OWNER.
13. CONTRACTOR shall coordinate bypass pump elevations and excavate area to meet suction head requirements.

C. Experience:
1. CONTRACTOR shall utilize staff and/or a subcontractor that has been directly responsible for the bypass pumping of sewage flows during the completion of a similar pipeline project.

1.2 SUBMITTALS

A. Submit drawings and complete design data showing methods and equipment proposed to be utilized in the water piping or sewer bypassing for review by the ENGINEER. Include the following information in the submittal:
1. Detailed Drawings indicating the scheme and location of temporary sewer line plugs, bypass discharge lines and the method and location for discharging the bypass lines.
2. Capacities of pumps, prime movers and standby equipment.
3. Pump equipment data sheets. Data sheets shall include a system head curve along with a pump curve to verify its operating point. The system head curve calculations shall be developed by the CONTRACTOR and be included within the submittal for review.
4. Design calculations proving adequacy of the system and selected equipment sealed by a Professional Civil Engineer, registered in the State of Arizona.
5. Detailed list of personnel to be utilized for the bypass pump operation. The list shall also include the local supplier of the by-pass pumps and force mains.
6. Detailed list of additional parts and equipment to be placed at the site should the system not operate as intended.
7. Standby Power Source
8. Secondary Containment Provisions
9. Spill Response Plan
10. Odor Control Plan

11. Detailed list of items and methods utilized to repair or replace items damaged or modified due to the by-pass pump operation.

B. The plan shall include a detailed daily schedule and a list of daily activities that will be completed before, during, and after the bypass operation. Include all personnel that are planned to work on the pipeline and the bypass pump operation.

C. Provide an emergency contact list for all of the personnel to be at the site. Include all of the OWNER'S and ENGINEER'S personnel. Once the emergency contact list is finalized, three (3) copies shall be printed, laminated, and placed at locations along the bypass pump operation as determined by the OWNER.

1.3 JOB CONDITIONS

A. Available Flow Data:
   1. There is no current flow data available, the CONTRACTOR shall be responsible for any/all monitoring of flows as necessary to properly size the bypass system to ensure against sanitary sewer overflows of upstream sewers
   2. Bypass flows might need to be sent to offsite sanitary sewer lift stations and associated force mains from the project pipelines. It shall be the CONTRACTOR's responsibility to coordinate work and any associated bypass operations with the city to maintain uninterrupted normal operation of these remote facilities.

B. Protection:
   1. Bypassing to the ground surface, receiving waters, storm drains or bypassing which results in soil or groundwater contamination or any potential health hazards is not permitted.

C. Scheduling:
   1. The bypassing system is not allowed to be shut down between shifts, on holidays, weekends or during work stoppage without written permission from the city. Provide an attendant, around the clock, whose only duty is to maintain the bypass pumping system until the bypassing of that specific pipeline is no longer required.

D. Service Lines:
   1. Water or sanitary sewers to be bypassed may have service lines connected to adjacent users. The known service lines have been shown on the construction drawings. Verify the locations of these lines and any other service lines not shown on the drawings.

PART 2 - PRODUCTS

2.1 MATERIALS

A. CONTRACTOR shall provide temporary piping, fittings, conduits, and all other equipment to bypass sewer flow around the CONTRACTOR'S Work as required. CONTRACTOR shall furnish all necessary labor supervision to set up and operate the pumping system. Equipment shall be equipped with sound attenuation devices to keep noise level within limits specified in the City of Chandler Codes or stated in the Contract Documents. Bypass shall be of adequate capacity and size to handle the required flows.

B. The pumps and bypass pipes shall be of adequate capacity and size to handle the required capacity.
   1. Pumping: The CONTRACTOR shall provide adequately sized pump(s) to accommodate 150 percent of the maximum instantaneous flow. CONTRACTOR shall decide the required flow capacity. The city may provide flow information if available to the CONTRACTOR but shall provide no guarantees regarding the accuracy of such data.
   2. The CONTRACTOR shall provide 100 percent redundant bypass pumping capability when only one pump is required to accommodate the flow. When multiple pumps are required to accommodate the bypass flows, the Contractor shall provide a minimum of 50 percent additional number of pumps.
   3. The Contractor shall provide fused (HDPE) piping to convey flow around the project area. HDPE pipe shall be used outside of spill containment area.
   4. The CONTRACTOR shall provide a full-time operator/inspector with full responsibility for the bypass pumping operation.
   5. In no case shall the CONTRACTOR allow any sewage to surcharge and backup into homes or businesses, or in any way overflow into the environment. If the bypass pumping capacity is insufficient to prevent surcharge and/or overflow at any time, the CONTRACTOR shall pull the line plugs to reestablish flow within the sewer irrespective of the status of the application or rehabilitation process. The OWNER shall not be responsible for or pay for any damage created by flow re-establishment.

C. CONTRACTOR shall maintain on-site sufficient equipment and materials to ensure continuous and successful operation of the bypass and dewatering systems. The CONTRACTOR shall maintain on-site a sufficient number of valves, tees, elbows, connections, tools, sewer plugs, piping, and other parts or system hardware to ensure immediate repair or modification of any part of the system as necessary.

D. All equipment shall be placed on a new plastic tarp, adequately sized, and bermed to protect against gasoline, oil, and hydraulic fluid spills.

PART 3 - EXECUTION

3.1 PROTECTION

A. In areas where flows are bypassed, all bypass flow shall be discharged as described above or approved by the city or city's representative. Bypassing to the ground surface, receiving waters, storm drains or bypassing which results in groundwater contamination or potential health hazards is not permitted.

B. Provide ENGINEER a copy of an emergency spill response plan. Plan shall address notification and clean up procedures. Immediately take action to halt and clean up all spills and immediately notify ENGINEER of any/all spills.

C. Perform all work in compliance with OSHA standards and in no case will noise levels be permitted which would interfere with the work of the city or others. Utilize sound attenuated bypass pumps with a maximum decibel rating of 70 db or less, measured at a distance of 50 feet. CONTRACTOR shall be responsible to provide and install sound attenuation devices, methods and/or systems to maintain noise levels below stated decibels. Sound measurements shall be made and recorded by the CONTRACTOR in accordance with ANSI/ASA S12.50-2002 and provided to the city's representative upon request.

D. Odor Control:
   1. Employ methods and procedures that mitigate the generation and discharge of objectionable odors to the surface environment at all times. CONTRACTOR shall be responsible for controlling hydrogen sulfide so as not to create nuisance odors and resident complaints per specification section 01570- Temporary Controls
   2. In areas where flows are bypassed, all bypass flow shall be discharged to a downstream sanitary sewer manhole following a bypass plan approved by the OWNER and ENGINEER. No bypassing to ground surface receiving waters, canals, storm drains, or bypassing which results in groundwater contamination or potential health hazards shall be permitted in accordance with the General Conditions.

3.2 DAMAGES

A. The CONTRACTOR shall repair, without cost to OWNER, any damage that may result from his negligence, inadequate or improper mechanical or electrical failures.

++ END OF SECTION ++

SECTION 02146

SEWER PIPE AND SEWER STRUCTURE CLEANING

PART 1 - GENERAL

1.1 DESCRIPTION

A. This specification section specifies the requirements for cleaning of the sewer pipe and sewer structures prior to remote visual CCTV inspection, pipe and/or manhole/structure rehabilitation. The work to be done under this Contract consists of furnishing all labor, materials, and equipment to remove accumulated sediments, clean, and preparation of the sanitary sewer pipes and/or sewer structures for rehabilitation.

1.2 SUBMITTALS

A. The following submittal shall be provided in accordance with Technical Specification Section 01330, Submittals:
   1. A letter identifying the methods the CONTRACTOR plans to employ to remove sediment, debris, grease, scale, encrustations, and roots throughout the sewer pipe to be lined and in the sewer manholes/structures to be repaired, rehabilitated or interior protective coating applied. The letter report shall include a detailed narrative explanation of the proposed cleaning process, schedule of activities, and detailed references where the CONTRACTOR has used the identified cleaning method successfully in the past.
   2. The CONTRACTOR shall submit the cleaning technique(s), nozzle, and water pressure and/or mechanical means proposed to ensure the interior circumference of the pipe and structures are clean and free from any residual sediment.
   3. The CONTRACTOR shall submit the proposed methods and procedures for preventing debris cleaned from structures and/or manholes from entering the live sewers (if present).
   4. The location of off-site disposal of all material removed from the sewer(s) along with letter of acceptance from the receiving disposal site accepting the debris.
   5. A copy of all haul permits obtained from all regulatory agencies.
   6. The CONTRACTOR shall submit a public awareness plan outlining the means and methods of proposed plans to mitigate impact to the public during the cleaning operation.

PART 2 - MATERIALS

2.1 CHEMICAL ADDITIVES

A. No chemicals shall be used without written approval of the ENGINEER. In no case shall any chemical additive be used which might be considered hazardous or might be considered detrimental to organisms or equipment of a wastewater treatment plant, or detrimental to old or new pipe materials.

B. A Safety Data Sheet (SDS) shall be posted onsite with a copy supplied to the ENGINEER for all chemicals anticipated to be used in the project or brought on-site.

2.2 HYDRO BLAST PIPE CLEANING-NOZZLE

A. The CONTRACTOR shall use a nozzle to ensure the interior 360-degree circumference of the pipe interior is clean and free from any residual sediment prior to lining.

B. It shall be the CONTRACTOR's responsibility to determine whether the structural condition of the existing pipe will not be detrimentally damaged by use of the spinning nozzle and water pressure to be utilized. The CONTRACTOR shall notify the ENGINEER of pipe condition that would be impacted through the proposed cleaning process and equipment.

2.3 SEWER STRUCTURE CLEANING – HYDRO BLAST

A. The CONTRACTOR shall use high pressure hydro blasting methods as appropriate and necessary to remove deteriorated concrete and any previously applied protective coatings/linings on the interior of manholes/structures down to solid/sound substrate material.

B. The CONTRACTOR shall use debris shields or other approved method to prevent debris dislodged from the interior of the manhole/structure from entering the live sewers. Discharge of removed sediment and debris into the interceptor pipe is prohibited. The CONTRACTOR shall remove and legally dispose of dislodged debris offsite. All hauling equipment shall be watertight to prevent spillage during transport. The CONTRACTOR will be responsible for interceptor pipe cleaning and removal of all sediments to a disposal facility.

PART 3 - EXECUTION

3.1 GENERAL

A. The CONTRACTOR shall conduct work to prevent any detrimental sewage blockage and minimize surcharging in the sewer manholes/structure or connecting sewer pipes.

B. It shall be the CONTRACTOR's responsibility to determine whether the structural condition of the existing pipe, manhole, and/or structure will not be detrimentally damaged as a result of any proposed cleaning process(es). Damage to existing facilities as a result of the CONTRACTOR's work shall be promptly repaired in kind at the CONTRACTOR's expense. The CONTRACTOR accepts the responsibility of reinstating normal sewer operation once the proposed cleaning operation is initiated.

C. It is CONTRACTOR's responsibility for all costs incurred with removal of sediment if observed to be discharged into an active interceptor sewer for a minimum distance of one (1) mile upstream and downstream of the work area location.

3.2 SEWER BYPASSING AND DEWATERING

A. Sewer flow shall be bypassed during the cleaning as specified in Technical Specification Section 02145, Diversion of Sewage Flow and Dewatering if required, or directed by the ENGINEER.

3.3 HYDRO BLAST CLEANING OF PIPES

A. The CONTRACTOR shall clean and remove existing sediment, debris, roots, scale, encrustations, grout, and FOG accumulations from the sanitary sewer pipes to be inspected or scheduled to be rehabilitated, to adequately prepare the surfaces for liner installation or protective surface application.

B. Pipe discovered by the CONTRACTOR or his Subcontractor to be physically deteriorated to the extent where cleaning may detrimentally impact the structural integrity shall be brought to the attention of the ENGINEER prior to conducting cleaning operations.

C. The CONTRACTOR shall clean the pipe to ensure proper installation of the sewer liner. Cleaning shall remove all sediment, rocks, debris, roots, FOG, accumulations, and obstructions from the sewer to be lined. Multiple passes with cleaning equipment may be required at no additional cost to the OWNER. Once the CONTRACTOR initiates the cleaning operation, they accept the responsibility of reinstating normal operation of the sewer.

D. Sediment or debris from cleaning operations larger than U.S. #8 sieve shall not be deposited downstream in the sewer. Sedimentation deposited downstream shall be removed at no cost to the OWNER. All materials dislodged during cleaning shall be removed from the pipe and delivered to an approved disposal site.

E. The CONTRACTOR shall be thoroughly familiar with all phases of sewer pipe cleaning to ensure the completion of this Contract without causing a health hazard or damage to the sewage system, public and private property.

F. It shall be the responsibility of the CONTRACTOR to repeat the cleaning process if root re- growth, FOG accumulation, or other detrimental obstructions are present between the time pre-video inspection and CIPP liner installation operation at no additional cost to the OWNER.

3.4 MECHANICAL CLEANING OF PIPES

A. The CONTRACTOR shall clean existing interior pipe of tuberculation, hardened FOG, scale, encrustations, root intrusions, and grout accumulations from the sanitary sewer pipes to be inspected or scheduled to be rehabilitated and adequately prepare the surfaces for installation of liner.

B. Pipe discovered by the CONTRACTOR or Subcontractor to be physically deteriorated to the extent where cleaning may detrimentally impact the structural integrity of the existing pipe shall be brought to the attention of the ENGINEER prior to conducting cleaning operations.

C. Cleaning shall remove all mineral accumulations and/or attachments from corrosion of metallic surfaces from the sewer to be lined and from the structures to be coated (if applicable). Cleaning of the sewer and structure interior surfaces shall remove all scale, encrustation, and any other foreign material from the surface.

D. The CONTRACTOR shall mechanically clean the pipe interior to within 95% of original interior pipe diameter as verified through interior pipe CCTV optical laser profiler or approved equal equipment to verify and document the internal pipe diameter prior to ordering and installing CIPP lining. Multiple passes with mechanical cleaning equipment may be required at no additional cost to the OWNER.

E. It shall be the responsibility of the CONTRACTOR to repeat the mechanical cleaning process if tuberculation, FOG, or detrimental corrosion buildup occurs prior to CIPP lining operation at no additional cost to the OWNER.

3.5 HYDRO BLAST CLEANING OF MANHOLES/STRUCTURES

A. The CONTRACTOR shall clean existing trough, throat, bench, wall, cone and chimney of debris, encrustations, FOG, and deteriorated concrete by the use of high-pressure hydro blasting. Once cleaning has commenced, the rehabilitation method chosen shall be completed in succession with no more than 48 hours transpiring between cleaning and rehabilitation activities.

B. Access manholes/structures discovered by the CONTRACTOR or Subcontractor to be physically deteriorated to the extent where cleaning may detrimentally impact the structural integrity of the existing access manhole/structure shall be brought to the attention of the ENGINEER prior to conducting cleaning operations.

C. Cleaning shall remove all deteriorated concrete such that the remaining surface is sound and free of unstable material.

3.6 PVC "T-LOCK" LINED PIPES

A. The CONTRACTOR shall clean the interior of any PVC lined pipe per paragraph 3.3 - Hydro- Blast Cleaning of Pipe in conjunction with the following according to the proposed pipe rehabilitation method proposed.

B. Rehabilitation Method: Cured-In-Place-Pipe Lining Installation:
   1. The CONTRACTOR shall remove existing PVC liner and/or joint material that is loose or hanging that may impact the liner installation process along with any hardened encrustations or protrusions that may impact the final diameter profile of the rehabilitated pipe.

3.7 RECLEANING

A. Recleaning of the sewer pipe/manhole/structure may be required prior to the remote visual pipe inspection preceding pipe rehabilitation at no additional cost to the OWNER.

3.8 REMOTE VISUAL INSPECTION

A. Cleaning of the sanitary sewer pipe is required prior to remote visual inspection of the sewer pipe to view surface and service lateral conditions (if present) per Technical Specification Section 02147, Remote CCTV Inspection Of Existing and Rehabilitated Sewers.

3.9 DISPOSAL OF SEDIMENTS

A. The CONTRACTOR shall be responsible for transporting and disposing, including all disposal fees, of any sediments and material removed from the sewer or structures.

B. All sediment and debris removed from the sewer system and associated appurtenances shall be disposed into a dump bin on-site which would be hauled to Butterfield landfill in a lawful manner. Hauling containers shall be watertight. On-site stockpiling of removed material will not be permitted.

C. The CONTRACTOR shall be responsible for obtaining all necessary permits, payment of all fees, and approval from all regulatory agencies required to perform the work, including transport of sediments. Off-site disposal of all material removed from the sewer shall be the CONTRACTOR's responsibility.

++ END OF SECTION ++

SECTION 02147

REMOTE CCTV INSPECTION OF EXISTING AND REHABILITATED SEWERS

PART 1 - GENERAL

1.1 DESCRIPTION

A. This Technical Specification defines the requirements for internal remote Closed-Circuit Television (CCTV) inspection of the existing sewer pipes and access manholes/structures before and after rehabilitation according to the National Association of Sewer Service Companies (NASSCO) standards. Interior pipe and manhole/structure condition (post video inspection) shall be documented following rehabilitation using digital scanning camera equipment.

1.2 SUBMITTALS

A. Preliminary Submittals:
   1. At the preconstruction conference the CONTRACTOR shall submit the following information for review per Specification Section 01330, Submittals following notification of award of the Contract:
      a. The CONTRACTOR shall submit operator name and NASSCO Pipeline Assessment and Certification Program (PACP) certification number and Manhole Assessment Certification Program (MACP) certification number of proposed CCTV operator for approval. CONTRACTOR shall promptly provide substitute operator and credentials in the event operator approval is denied.
      b. The CONTRACTOR shall submit an example of work of the proposed camera equipment to demonstrate quality and clarity of video along with proposed methods of documentation. Example shall consist of one (1) remote visual inspection record in proposed format of previous sewer inspection work completed along with associated audio commentary and inspection log(s). The submitted record shall show operational and structural defects in sewers that are of the same diameter as the sewers in this project.
      c. The information will be reviewed to determine if the quality of the images, technique, and inspection procedures are acceptable and if defects were properly identified and documented. Samples shall be with the same camera, lighting equipment, and data handling procedures proposed for this work.
      d. The OWNER and/or ENGINEER will review the records, not for accuracy of content, but to make sure that the required information is provided, and the recording is of acceptable quality. If the OWNER and/or ENGINEER determines that the records are defective or not of adequate quality, the CONTRACTOR shall repeat the inspection documentation at the CONTRACTOR's expense.

e. The CONTRACTOR shall be responsible for modifications to his equipment and/or inspection procedures to achieve report material of acceptable quality. No work shall commence prior to approval of the material by the OWNER and/or ENGINEER. Once accepted, the report material shall serve as a standard for the remaining work.

f. The CONTRACTOR shall resubmit a final video showing a post inspection after the liner issue(s) have been addressed and approved, and after the manhole rehabilitation is complete and approved. CONTRACTOR shall correct all title information on the video and labels prior to final submittal.

g. Universal Serial Bus (USB) or external hard drive records shall include labels containing project titles, dates, including OWNER and CONTRACTOR company names. The CONTRACTOR shall maintain a copy of all inspection documentation (disks, tapes, databases, and logs) for the duration of the work and warranty period.

B. Submittals:

1. Pre-Construction Inspections: One (1) copy of the pre-construction CCTV inspection stored on external hard drive or USB media, showing the existing sewer pipe after preliminary cleaning, shall be submitted to the OWNER or ENGINEER a minimum of 14 days prior to CIPP lining. The distance to each sanitary sewer lateral shall be recorded on the inspection tape and paper copy record. Each pipe segment to be rehabilitated shall be CCTV inspected and recorded. Multiple pipe segment inspections can be stored on one DVD or USB. If the OWNER or ENGINEER determines that the records are defective, not of adequate quality, not containing pipe identification information, or footage counter, the CONTRACTOR shall repeat the inspection documentation at the CONTRACTOR's expense.
2. One (1) copy of the CCTV inspection stored on external hard drive or USB media or external hard drive, showing the existing sewer pipes after cleaning, just prior to CIPP installation, along with a final inspection video (to be panoramic) following liner installation and any lateral opening reinstatement. Videos shall be submitted to the OWNER or ENGINEER within one (1) day of collecting the final inspection video. The OWNER or ENGINEER will track and compile a final record of initial cleaning, pre-lining CCTV, post-lining CCTV, and if necessary secondary post-lining CCTV after any liner issues have been addressed and submitted to the OWNER or ENGINEER by the CONTRACTOR for work acceptance.
3. One (1) copy of the CCTV inspection stored on external hard drive or USB media or external hard drive, showing the existing access manhole/structure after cleaning, just prior to the repair material installation along with a final inspection video (to be panoramic) after rehabilitation. Video shall be submitted to the OWNER or ENGINEER within one (1) day of the final inspection video collection. The OWNER or ENGINEER will track and compile a final record of initial cleaning, pre-rehabilitation CCTV, post-rehabilitation CCTV, and if necessary secondary post-rehabilitation CCTV after any issues have been addressed and submitted to the OWNER or ENGINEER by the CONTRACTOR for work acceptance.

4. The CONTRACTOR shall submit written inspection logs and CCTV procedures according to NASSCO PACP for the sewer pipes inspected and/or rehabilitated.
5. The CONTRACTOR shall submit written inspection logs and CCTV procedures according to NASSCO MACP standards for the sewer access manholes/structures inspected and/or rehabilitated.

PART 2 - PRODUCTS

2.1 MATERIALS

A. Television Inspection Camera(s):
   1. Camera(s) shall be intrinsically safe and shall be capable of safely operating in 100 percent humidity conditions. Lighting intensity shall be remote controlled and shall be adjusted to minimize reflective glare. Lighting and camera quality shall provide a clear, focused picture of the entire inside periphery of the sewer. Analog type camera shall have tilt and zoom capabilities to view 90 degrees to the pipe centerline for the entire
   360 degrees of the pipe circumference. Digital type cameras shall possess forward and rear facing cameras with 360-degree view capabilities.
   2. The CONTRACTOR shall utilize equipment that allows for CCTV to be performed within conditions noted in the Technical Specification. CONTRACTOR's equipment shall be sized to fit and maneuverable within final diameter of rehabilitated pipe segments. Any scrapes or damage to the interior pipe liner or newly installed protective manhole/structure coating or lining resulting from equipment operation shall be addressed and corrected by the CONTRACTOR at no additional cost to the OWNER.
   3. The CONTRACTOR shall utilize a digital, Panaramo 360 or approved equal for post CCTV inspection of pipes 12-inch diameter and larger and for use in manholes/structures. Either digital or analog CCTV equipment is permitted for use in pipes less than 12-inches in diameter.

B. Video Storage Devices:
   1. Video recordings of all sewer line inspections shall be made on USB media or digital external hard drive. The audio portion of the video shall be sufficiently free from electrical interference and background noise to provide complete intelligibility of the oral report. A copy of the video recordings shall be consolidated on USB or digital external hard drive media with corresponding OWNER unique appurtenance quarter section number.

C. Footage Counter:
   1. A footage counter device, which measures the distance traveled by the camera in the sewer, shall be accurate to plus or minus 2 feet in 1,000 feet.

D. Video Titling:

1. Video equipment shall include genlocking capabilities to the extent that computer generated data, (e.g., footage, date, size, address and location, etc.) as determined by the OWNER can be overlaid onto video, and both indicated on the television monitor and permanently recorded on the inspection video.

PART 3 - EXECUTION

3.1 FLOWS IN SEWERS

A. The CONTRACTOR shall provide temporary dry conditions in the sewer pipes during remote visual CCTV inspections and continuously until completion of liner installation and final documentation CCTV video inspection. The bypassing requirements are provided in Technical Specification Section 02145, Diversion of Sewage Flow and Dewatering.

3.2 CLEANING

A. The remote visual inspection shall be performed after cleaning the sewer pipe or access manhole as specified in Technical Specification Section 02146, Sewer and Sewer Structure Cleaning, and prior to lining the pipe. The CONTRACTOR shall be responsible for properly inspecting and documenting the final condition of the rehabilitated pipe.

3.3 SCHEDULE

A. The CONTRACTOR shall submit post CCTV of segments within one (1) working day from the date of installation. The CONTRACTOR shall also be responsible to produce and submit electronic inspection logs of the inspection process.

3.4 SEQUENCE OF INSPECTION

A. The sewer pipe shall be remote visually inspected, in the same direction, prior to and following the lining of the sewer. Final CCTV inspection shall be performed after lateral reinstatement has been completed.

3.5 INSPECTION METHODS

A. The CONTRACTOR shall inspect the sewer interior using a camera or process capable of producing a color image for permanent record and documentation of inspection in digital format (mpeg or jpeg) with audio location and date information, data title information.

B. Verbal Commentary:
   1. The CONTRACTOR shall audio record narrative on the remote visual inspection location, upstream and downstream control points, date, and time of the inspection.

C. Access:
   1. The OWNER or ENGINEER shall have full access to observe and monitor all other operations at all times. The system of cabling employed to transport the camera and transmit its signal shall not obstruct the camera's view.

D. Inspection Rate:
   1. The camera shall be pulled through the sewer in either direction, but all inspections at each location shall be in the same direction. Maximum rate of travel shall be 30 feet per minute when recording with analog camera systems.

E. Image Perspective:
   1. The camera image shall be down the center axis of the pipe when the camera is in motion. The CONTRACTOR is required to provide a 360-degree view of the pipe interior. Points of interest shall also be documented and shall include, but not be limited to, defects, encrustations, mineral deposits, debris, sediment, any location determined not to be clean or part of a proper liner installation, or defects in the liner (including, but not limited to, bumps, folds, tears, dimples, etc.).
   2. Each individual sanitary sewer lateral opening to the sewer main shall be remote visually inspected. Camera shall first pan and tilt to the lateral opening prior to zoom for analog camera systems. Full 360-degree views of the lateral opening shall be documented without zoom. CONTRACTOR shall not utilize pan, tilt and/or zoom simultaneously.

F. Sewer Identification:
   1. All inspection documentation shall include the sewer location identified by OWNER quarter section manhole numbers.

G. Sewer Flow Control:
   1. During remote visual inspections, and continuously until completion of liner installation and final CCTV documentation inspection, the CONTRACTOR shall provide temporary dry conditions in the sewer pipes. The bypassing requirements are provided in Technical Specification Section 02145, Diversion of Sewage Flow and Dewatering.

H. Quality Control:
   1. The OWNER’s Representative will review USB or external hard drive to ensure compliance with the requirements listed in this Technical Specification and Contract Documents. If the sewer pipe or access manhole is determined not to be adequately cleaned, as required in Technical Specification Section 02146, Sewer and Sewer Structure Cleaning it shall be recleaned and remote visual inspection repeated by the CONTRACTOR at no additional cost to the OWNER. If any portion of the liner or manhole rehabilitation is determined not acceptable, the liner shall be repaired or replaced, whichever the OWNER’s Representative deems appropriate, and re-inspected and documented.

++ END OF SECTION ++

SECTION 02148

CIPP LINING OF EXISTING SEWERS

PART 1 - GENERAL

1.1 DESCRIPTION

A. Scope:
   1. This Technical Specification Section specifies the Cured-In-Place-Pipe (CIPP) rehabilitation lining, sets acceptable material and experience parameters, defines minimum performance requirements for the finished, installed product and details testing requirements for the completed product.

B. Requirements:
   1. The CONTRACTOR shall provide and install a resin saturated flexible tube (lining/liner) with an interior plastic coating wearing surface into pipes identified for CIPP lining in accordance with ASTM International D5813 – Type II (fully deteriorated), (ASTM) F1216, ASTM F2019, and ASTM F1743 for the inversion installation method with resin cured by exposure to heated water or using pull-in place method with Glass Reinforced Plastic (GRP) cured by exposure to UV-light. When cured, the CIPP lining shall be continuous and tight fitting.

1.2 CLIMATIC CONDITIONS

A. The CONTRACTOR is made aware that the Work may occur during the summer months with temperatures exceeding 115 degrees F. The CONTRACTOR shall be prepared for these conditions and alter catalyst, installation procedures, or provide protection from detrimental exposure to adverse temperature consistent with the materials proposed for use.

B. Severe thunderstorms could occur that may increase volume of flow present within the sewer system. The CONTRACTOR shall be prepared for these conditions and alter the installation procedures and/or provide bypass pumping capabilities accordingly. The CONTRACTOR shall be responsible for review of the weather forecast prior to commencement of liner installation that restricts or impedes the flow capacity of the sewer pipe being rehabilitated. When the anticipated weather conditions are such that the resulting sewer flow may exceed upstream sanitary system storage volume or the capacity of the bypass pumping system or otherwise adversely affect the CIPP liner installation then the ENGINEER shall be informed, and the installation shall be delayed until favorable weather is forecasted.

1.3 EXPERIENCE RECORD OF THE CONTRACTOR

A. The CONTRACTOR shall provide to the satisfaction of the OWNER written documentation from the CIPP lining manufacturer that the CONTRACTOR's personnel have been adequately instructed and trained in the installation procedures of the CIPP liner process proposed. Such written documentation shall describe manufacturer's procedures for the installers, safety instructions, training program, identification, and protocol of a course of action(s) in the event installation deviates from recommended procedures and, if applicable, licensing policies.

B. The CONTRACTOR or it's CIPP liner subconsultant, shall have successfully managed, in addition to an experienced onsite superintendent possessing a minimum of 5,000 linear feet of CIPP liner installation experience on projects utilizing similar materials, installation techniques, and CIPP liner diameter like those proposed on this Project within the previous three (3) years of the bid date of this project.

1.4 QUALITY ASSURANCE REFERENCES

A. This Technical Specification section contains references to the following documents. In case of conflict between the requirements of this section and those of the listed documents, the requirements of this section shall prevail.
   1. AASHTO Loading, American Association of State Highway and Transportation Officials - Anticipated external load to be placed on the pipe.
   2. ASTM F412, Standard Terminology Relating to Plastic Piping Systems.
   3. ASTM F1216 (including Appendix XI): Standard Practice for Rehabilitation of Existing Pipelines and Conduits by the Inversion and Curing of a Resin-Impregnated Tube.
   4. ASTM F3240: Standard Practice for Rehabilitation of Existing Pipelines and Conduits by the Inversion and Curing of a Resin-Impregnated Tube.
   5. ASTM F3240: Standard Practice for Installation of Seamless Molded Hydrophilic Gaskets (SMHG) for Long- Term Watertightness of Cured-in-Place Rehabilitation of Main and Lateral Pipelines
   6. ASTM C58: Standard Practice for Determining Chemical Resistance of Thermosetting Resins used in Glass-Fiber Reinforced Structures, Intended for Liquid Service.
   7. ASCE MOP145: Design of Close Fit Liners for the Rehabilitation of Gravity Pipes
   8. ASTM F2019: Standard Practice for Rehabilitation of Existing Pipelines and Conduits by the Pulled in Place Installation of Glass Reinforced Plastic Using the UV-Light Curing Method
   9. ASTM D543: Standard Practice for Evaluating the Resistance of Plastics to Chemical Reagents.
   10. ASTM D638: Standard Test Method for Tensile Properties of Plastics.
   11. ASTM D790: Standard Test Methods for Flexural Properties of Unreinforced and Reinforced Plastics and Electrical Insulating Materials.

12. ASTM D883: Standard Terminology Relating to Plastics. ASTM D1600 Standard Terminology for Abbreviated Terms Relating to Plastics.
13. ASTM D2990: Standard Tes Methods for Tensile, Compressive, and Flexural Creep and Creep- Rupture of Plastics.
14. ASTM D5813: Standard Specification for Cured-in-Place Thermosetting Resin Sewer Piping Systems.
15. ASTM D3039 / D3039M: Standard Test Method for Tensile Properties of Polymer Matrix Composite Material.
16. ASTM E797: Standard Practice for Measuring Thickness by Manual Ultrasonic Pulse-Echo Contact Method.
17. NASSCO: National Association of Sewer Service Companies

1.5 SUBMITTALS

A. The following Submittals shall be provided in accordance with Technical Specification
Section 01330, Submittals:

1. Shop drawings which detail short- and long-term properties (providing all supporting test data) of all component materials, construction procedural requirements for material for material handling, storage, sunlight control (if applicable), temperature control (if applicable), and any other CIPP liner handling/installation constraints.
2. Submit contractor and liner manufacturer qualifications.
3. Representative cured liner sample (1-foot in length) or sample plate for large diameter (1-foot square) for each diameter size of the same resin and CIPP tube components proposed for the project depicting the final quality of workmanship that can be expected on this project.
4. Structural CIPP liner calculations per the design parameters stated in paragraph 2.5. CIPP liner calculations shall be professionally sealed by a Civil Engineer licensed in the State of Arizona.
5. 10,000-hour third party, 50-year Flexural Creep Modulus test data. The test shall be in accordance with ASTM D2990 at 10,000 hours. If results of a 10,000-hour tests are not available, the CONTRACTOR shall use a minimum 50 percent reduction (50 percent retention) of Flexural Modulus of Elasticity (per ASTM F1216) for all formula calculations.
6. Independent laboratory test report(s) of CIPP sample(s) and tests as specified in 02148, paragraph 2.2 and 2.3. Chemical resistance and GRP/resin properties testing shall be performed on a previously prepared sample of the finished product proposed for the project. A Certified Affidavit, signed by an officer of the CIPP liner installation company, shall be provided stating that the resin/GRP the test applies to, and the resin/GRP submitted for this project are the same.
7. Independent laboratory test report(s) of CIPP sample(s) and tests as specified in paragraph 1.6.B. Testing shall be performed on prepared samples of the finished product installed as part of this project. A copy of the completed Chain of Custody

form shall be submitted to the ENGINEER along with independent laboratory test results.

8. Detailed method(s), locations, and procedures, for creating a representative CIPP sample on-site for independent laboratory testing.
9. Certified Test Results for abrasion resistance in accordance with DIN EN 295-3 / DIN 19565.
10. Certification from the manufacturer that the resin, carrier felt and CIPP tube material(s) supplied complies with ASTM D5813 and meets the intended service condition(s) set forth in this Technical Specification.
11. Manufacturer's recommended installation procedures per ASTM F1216 and ASTM F2019.
    a. If the "inversion" method is employed per ASTM F1216, provide maximum inversion head (psi for air inversion, or feet of head for water inversion) pressure and proposed method of monitoring/documenting pressures.
    b. If the "pull-in place" method is employed per ASTM F2019, provide maximum blower air pressure and proposed method of monitoring/documenting pressures.
12. Cure information from the resin/GRP manufacturer for the properties of the materials proposed for use on this project, including recommended method(s) of application of heat/UV, the medium that initiates the curing process. Recommenced step "cooking" temperatures and hours at each stage including maximum rate (degrees per hour) of liner heating/cooling, target maximum temperature, duration of target cure temperature, acceptable fluctuation in target temperature with description of remedial actions to be taken if fluctuations occur, and the lower target temperature when the controlled temperature curing process is terminated, and the heated water is released from the liner interior or the UV light train is pulled out. CONTRACTOR shall provide written plan for installation crew use in the event manufacture recommended temperature is not attained in a portion of the liner.
13. Certification showing the CONTRACTOR is currently licensed by the appropriate licensor to perform CIPP installation materials and processes proposed. Certification shall be given to the ENGINEER before any materials are delivered to the job site.
14. A certified affidavit, signed by an officer of the installation Company, stating, and certifying that the on-site superintendent has received proper training in the manufacturer's recommendations for CIPP liner installation methods and procedures.
15. Proposed method of measuring dimensional size and height of observed defects and an outline of specific repair or replacement procedures as recommended by the CIPP manufacturer for defects that may occur in the installed liner. Potential defects within the CIPP liner that cannot be repaired in-place shall be clearly defined by the CONTRACTOR based on the manufacture's recommendations shall be accompanied by a compensation-in-lieu of repair proposal submitted to the OWNER for potential consideration. Acceptance of the proposal shall not be binding on the OWNER.
16. Certification stating CIPP tube has been manufactured in accordance with ASTM F1216 and resin ASTM D5813 is suitable for its intended use.

17. Certification stating CIPP GRP has been manufactured in accordance with ASTM F2019 and ASTM D578 and is suitable for intended use.
18. Manhole connection (liner termination) detail and material proposed to seal any annular space between the liner and host pipe. Sealing product manufacturer's literature and technical data for provided products. A preformed hydrophilic expanding material, able to with-stand hydration and de-hydration cycles in sanitary sewer service, shall be used between the liner and host pipe at all locations where the CIPP enters and exits the pipe at manholes or similar access points
19. Warranty information and certificates.
20. Safety Data Sheets (SDS) for all hazardous chemicals used or expected to be on-site. At a minimum, sheets for the resin, catalyst, cleaners, and repair agents should be submitted.
21. Proposed equipment and installation methods for fiber optic cable temperature monitoring system cable for documenting the wall temperature during cure along the entire length of the CIPP liner being installed. CONTRACTOR shall provide intended backup method(s) for temperature monitoring in the event of fiber optic system failure.
22. Baseline resin spectrograph for resin material proposed.
23. 24-hour written notification of cure water release (if applicable).
24. Remote visual inspection video and reports as specified in paragraph 3.1.D for each installation including pre-inspection, installation curing protocol and post-installation.
25. Contractor shall submit a repair plan to OWNER or ENGINEER should corrections to the Work be required.

1.6 INSTALLED CIPP LINER QUALITY CONTROL

A. Affidavit Of Sample Authenticity:
   1. A certified affidavit, signed by a representative of the installation company, shall be provided stating that the samples collected, and the samples submitted to the laboratory for testing are the same and apply to the location intended.

B. Laboratory Test Sample:
   1. The CONTRACTOR shall prepare samples of the CIPP liner installed as part of this project for subsequent testing of its physical properties. Previous test data will not be acceptable. Samples shall be prepared and tested using the flat plate sampling or clamped mold method in accordance with the procedures of ASTM F1216. The sample will be constructed of the same materials (tube and resin/catalyst) as is used for that given liner installation held in place by a suitable heat sink. The flat plate or molded sample shall be large enough to provide five (5) sample specimens each.
      a. The CONTRACTOR shall prepare a redundant sample for potential use in the event primary test samples are lost or damaged during transport. Redundant samples shall be labeled, initialed, and dated by the ENGINEER, protected, and retained by the CONTRACTOR until such time as acceptable liner test results are received by the ENGINEER. The CONTRACTOR shall inform the

ENGINEER in the event redundant samples are to be sent to the testing laboratory. The ENGINEER shall verify redundant samples identification prior to shipment. CONTRACTOR shall obtain authorization from the ENGINEER prior to disposal of redundant samples.

2. The cured sample shall be sent to and tested by an independent testing laboratory, as recommended by the CIPP liner manufacturer, and approved by the ENGINEER. The CIPP liner samples taken shall be sent to an independent laboratory within three (3) days of collection. The samples are to be signed by the ENGINEER and accompanied by a completed Chain of Custody form. Results of laboratory testing shall be submitted directly to the ENGINEER within three (3) working days of receipt by the CONTRACTOR.
   a. Final payment for the CIPP liner installation will not be made until the test results are received and approved by the ENGINEER. The CONTRACTOR shall be responsible for any deviation from the specified physical properties and those evaluated through testing. Failure to meet the specified physical properties will result in the CIPP liner being considered defective work which will be handled in accordance with MAG Section 106. The CONTRACTOR shall be responsible for all costs associated with the testing of the liner's physical properties.
3. Samples taken for testing shall be individually labeled and logged to record the following:
   a. OWNER name.
   b. OWNER's project number and project title.
   c. Unique sample number.
   d. Pipe segment number as noted on Drawings or Pipe Rehabilitation List.
   e. Date and time sample was taken.
   f. Name of CONTRACTOR.
   g. Date, location, and name of person by whom the sample was taken.

Updated copies of the test log shall be submitted to the ENGINEER at the regularly scheduled coordination meeting.

4. Test Sample Frequency: The above-stated sampling shall be performed for each manufacturing lot of CIPP liner materials (per diameter size).
   a. A sample shall be taken every 3,000 lineal feet or one semi-trailer load of liner whichever is less. The ENGINEER reserves the right to request the CONTRACTOR to perform one (1) additional sample test for every 3,000 lineal feet or one semi-trailer load of liner whichever is less.
   b. If felt liner is saturated with resin on-site, sampling frequency shall be per each pipe segment rehabilitated. The ENGINEER reserves the right to request the CONTRACTOR to perform one (1) additional sample test per pipe segment installed.
5. Grounds For Installed Liner Rejection:

   Grounds for rejection of installed CIPP liner include, but not limited to the following:
   a. CIPP sample sent to a laboratory that is missing the ENGINEER's signature.

b. CIPP samples missing the Chain of Custody form.
c. Chain of Custody form missing information or signatures of all those who handled or processed the sample, including the signature of the laboratory Manager responsible for performing the quality control testing.
d. Laboratory test result(s) do not meet minimum Technical Specification requirements.

C. Sample Labeling:

Each liner tube sample shall be labeled with: CONTRACTOR Name, Date, Project Name, OWNER's Unique Pipe Identification Number, Host Pipe Diameter. Documentation shall also include the following:

1. Liner manufacturer's name.
2. Location of the liner manufacturer.
3. Felt supplier.
4. Resin supplier.
5. Resin identification number.
6. Resin weight – lbs/ft.
7. GRP Supplier in case of UV cured-in place pipe
8. Manufactured liner length both resin saturated felt "wet" and dry felt "dry".
9. Liner thickness.
10. Liner diameter.
11. Date of resin saturated into felt liner.
12. Unique identification number of liner.

7. ASTM F2019 reference: Section 7, X2, X3, modified test procedure to ASTM D790 and ASTM D2990 for GRP-CIPP UV-cured liner. Prior to construction, the CONTRACTOR shall submit certified type test reports of long-term and short-term flexural modulus of elasticity, flexural strength (bending stress). Tested samples shall meet the liner manufacturer's declared values or exceed the minimum values of Table 1 shown in ASTM F2019.

1.7 CIPP LINER HANDLING:

A. The CONTRACTOR shall exercise adequate care during transportation, handling, and installation to ensure the CIPP material is not torn, cut, or otherwise damaged. If any part or parts of the CIPP material becomes torn, cut or otherwise damaged before or during insertion, it shall be repaired or replaced in accordance with the manufacturer's recommendations and approval by the ENGINEER before proceeding further, and at the CONTRACTOR's expense.

1.8 WARRANTY

A. The work performed under this Project shall be warranted to be free from defects in workmanship and material for a period of two **(2) years** from the date of Final Acceptance by the OWNER. If the OWNER or ENGINEER determines that the process/material/installation has failed during the warranty period, the CONTRACTOR shall perform any and all repairs, including ancillary costs associated with performing the repair at no additional cost to the OWNER.

B. The warranty period of any part of the Work repaired or replaced under the provisions of the warranty shall be extended for **one (1)** additional year.

1.9 LINER MANUFACTURE INSPECTION

A. The CONTRACTOR /manufacturer of CIPP liner shall allow access to either the on-site or remote liner wet-out facility to observe the manufacturing/saturation process of the CIPP liner by the OWNER and/or the ENGINEER. The ENGINEER, while not acting as quality control agent for the CONTRACTOR, shall be allowed to view and document any portion of this contract work, including but not limited to verifying type and quantities of resin used at any point during manufacturing/installation or performance of this work.

PART 2 - PRODUCTS

2.1 GENERAL

A. All materials and installation procedures provided by the CONTRACTOR for use in the CIPP installation process shall be equal to or exceed the requirements of ASTM F2019, ASTM F1216, and ASTM D2990.

B. The CONTRACTOR shall be responsible for control of all material and process variables to provide a finished CIPP possessing the minimum properties specified in ASTM F1216 and ASTM 5813 or ASTM F2019 and D578 and/or supplemented herein.

2.2 COMPONENT PROPERTIES

A. Felt Carrier Material:
   1. The liner tube carrier material shall consist of one or more layers of flexible needled felt or an equivalent non-woven and/or woven material meeting ASTM 1216 Section 5 or ASTM F1743 Section 5.2.1 and capable of carrying resin, withstanding installation pressures, and curing temperatures, and is compatible with the resin system used. The carrier material shall be fabricated to a size that, when installed, will be tight fitting to the internal circumference of the existing sanitary sewer host main. Allowances shall be made for circumferential stretching due to host pipe manufacturing tolerances and/or extent of deterioration of existing pipe walls.

2. The minimum material length shall be that deemed necessary by the CONTRACTOR to span the distance effectively and continuously from the inlet interior wall face to the outlet interior wall face of the respective manholes, unless otherwise specified. The CONTRACTOR shall verify the lengths in the field before felt liner saturation and installation of the CIPP tube. Individual insertion runs may be made over one or more manhole sections as determined in the field by the CONTRACTOR and approved by the ENGINEER.
3. Prior to insertion, the carrier material shall be free of all visible tears, holes, cuts, foreign materials, and other defects.
4. The CONTRACTOR shall provide manufacturer's data on the maximum allowable stresses and allowable elongation of the carrier material. Insertion forces imposed shall not exceed the allowable stress of the material. The overall elongation of the CIPP tube shall be measured after pull-in completion.

B. Resin:
1. The resin system to be used shall be manufactured by an approved company selected by the CIPP system manufacturer. Only corrosion resistant polyester or vinyl ester resins shall be used.
2. The resin used shall produce a properly cured-in-place pipe system appropriate for conditions encountered, which will be resistant to abrasion caused by solids, grit, and/or sand. The cured-in-place pipe system shall also be resistant to corrosion due to acids and gases such as sulfuric acid, carbonic acid, hydrogen sulfide, methane, and carbon monoxide. The cured-in-place pipe system utilized shall withstand the corrosive effect of the existing residential, commercial, and industrial effluents, liquids and/or gases.
3. The physical properties stated in paragraph 2.3 apply to CIPP manufactured polyester or vinyl ester resin. Resin shall be tinted for visibility and provide positive indication of adequate liner wet-out. The CONTRACTOR shall not change resin manufacturer or type without written approval obtained from the ENGINEER. Written request shall be accompanied by manufacturer's documentation per Technical Specification Section 01330 – Submittals for approval prior to use.

C. Glass Reinforced Plastic:
1. The manufacturer shall furnish a general-purpose polyester or vinyl ester ultra-violet light curing resin and catalyst system compatible with the ultra-violet light curing process that provides cured physical strengths specified herein if UV light is used for curing.
2. For Light-Cure products, the fiberglass shall be Environmentally Corrosive Resistant (ECR) fiberglass and the finished ultra-violet light cured fiberglass pipe liner shall be fabricated from materials which when complete are chemically resistant to and will withstand internal exposure to domestic sewage and temperatures up to 150 F.
3. All ultra-violet light cured-in-place fiberglass lining products shall comply with ASTM F2019 or the intent thereof as determined by the Engineer, minimum finished liner thickness as defined by design calculation.

4. The liner shall be provided with interior and exterior films to prevent resin migration and contamination. Films shall be in accordance with ASTM F2019 and shall be a styrene gas barrier. Inner films shall be fully removed during the installation process unless it is a permanent part of the system and fabricated as an integral part of the fabric tube by bonding or fusing. Exterior films shall block ultra-violet light.
5. The interior and exterior films shall be free from tears, holes, cuts, foreign materials and other surface defects.
6. The layers of the cured CIPP shall he uniformly bonded. It shall not be possible to separate any two layers with a probe or point of a knife blade so that the layers separate cleanly or the probe or knife blade moves freely between the layers; nor shall separation of the layers occur during testing performed under the requirements of this specification.

D. CIPP Liner Tube:
1. The CIPP tube shall be comprised of a carrier material, resin, and polyurethane, polyethylene, or polypropylene coating(s) on its interior surface to protect the resin from contaminate intrusion or loss of resin through migration. Any temporary interior resin containment coatings or films shall be removed following CIPP tube installation but prior to lateral seal installation (if present) at no additional cost to the OWNER.
2. The liner tube shall be fabricated to a diameter size that when installed will fit tightly into the internal circumference of the existing sanitary sewer main without any annular space between liner and walls of host pipe. Allowances shall be made in the CIPP tube diameter sizing to allow for potential circumferential stretching due to host pipe manufacture tolerances and/or deterioration of the host pipe walls.
3. The minimum liner tube length shall be that deemed necessary by the CONTRACTOR to span the distance effectively and continuously from the inlet to the outlet of the respective manholes, unless otherwise specified. The CONTRACTOR shall verify the lengths in the field before impregnation and installation of the CIPP tube. Individual insertion runs may be made over one or more manhole sections as determined by the CONTRACTOR.
4. The CONTRACTOR shall measure the overall elongation of the CIPP tube after installation completion and report to the ENGINEER immediately following insertion. Summary of CIPP tube elongation shall be submitted per Technical Specification Section 01330, Submittals.
5. Prior to insertion, the CIPP liner tube shall be free of all visible tears, holes, cuts, foreign materials, and other defects. The CONTRACTOR shall perform necessary repairs according to CIPP tube manufacturer recommendations or replace the tube in its entirety at no additional cost to the OWNER.
6. CONTRACTOR shall submit according to Technical Specification Section 01330, Submittals, the recommended step “cure” temperatures and hours at each stages including maximum rate (degrees per hour) of liner heating/cooling, target temperature, duration of target cure temperature, acceptable fluctuation in target temperature with description of remedial actions to be taken if fluctuations occur,

and target temperature when the controlled temperature curing process is terminated and heated water or air is released from the liner interior.

E. CIPP Tube Dimensions:

1. The CONTRACTOR shall make allowances in determining the felt tube length and circumference for stretching during installation and shrinkage during curing. The CONTRACTOR shall verify the lengths in the field before the felt tube is cut and saturated. Individual installation runs may include one or more manhole-to- manhole sections as approved by the ENGINEER.
2. The CONTRACTOR shall determine the length of any dry tube, if any, that may be necessary for the installation process proposed. OWNER shall not entertain payment for excess CIPP length, including dry tube not saturated with resin.
3. The diameter of the host pipe may be larger than the nominal inside diameter due to corrosion of the existing host pipe. It is the CONTRACTOR's responsibility to field measure the diameter of existing host pipe and determine the required diameter of the CIPP tube to produce a close-fit lining.
4. "Minimum Design" thickness shall be the CIPP calculated thickness in accordance with ASTM F1216 and D5813 for **Type II fully deteriorated** design loading, rounded to the next manufacturer's standard incremental thickness above the minimum calculated design thickness. Calculations of liner thickness shall be submitted to the ENGINEER according to Technical Specification Section 01330, Submittals prior to installation.
   a. Unless otherwise specified to provide for excess resin migration, the gap thickness of the wetting out equipment shall be sized to allow an excess of 5 to 10 percent (5-
   10%) resin to pass during saturation. The measurement of liner thickness, installed and cured, shall be determined at a minimum of three (3) locations cut from a CIPP restrained liner sample, minus the thickness of any plastic coatings or CIPP layers not included in the structural design of the CIPP, using a method of measurement accurate to the nearest 0.005-mm.
5. The nominal wall thickness shall be at least the final design thickness, or the minimum specified, and may be up to fifteen percent (15%) greater except at the locations where the felt layers overlap, in which case it may be in excess of this value.

2.3 CHEMICAL RESISTANCE

A. The chemical resistance of the actual resin system used by the CONTRACTOR shall be tested by the resin manufacturer in accordance with ASTM F1216, D543, or C581 as applicable for heat/steam cured or with ASTM F2019 and D5813 for UV cured CIPP. Exposure to the chemical solutions listed below shall result in a loss of not more than 20 percent of the initial physical properties when tested in accordance with ASTM C581 when subjected to the following solutions:

Chemical Solution	Concentration (%)
Tap Water (pH 6-9)	100
Nitric Acid	5
Phosphoric Acid	10
Sulfuric Acid	10
Gasoline	100
Vegetable Oil	100
Detergent	0.1
Soap	0.1

B. The CONTRACTOR shall be responsible for all costs associated with the chemical resistance tests. Proof of meeting these requirements shall be provided to the ENGINEER for approval at least seven (7) days prior to commencement of work.

2.4 FINISHED AND CURED CIPP LINER PROPERTIES

A. The physical properties of the cured CIPP shall have minimum initial test values as given in Table 1 of ASTM F1216 for resin impregnated felt tube and supplemented below in Table 1. Properties for these or any other enhanced resins shall be substantiated with test data.

Table 1: CIPP Liner Properties		
	Resin Saturated Felt Tube	
Test Property	Test Value	Test Method
Flexural strength	5,000 psi, nnno	ASTM D790
Flexural modulus	250,000 psi	ASTM D790
50-year flexural creep modulus	150,000 psi	ASTM D2990

B. The physical properties of the cured CIPP shall have minimum initial test values as given in Table 1 of ASTM F2019 for liner cured by UV light and supplemented below in Table 1. Properties for these or any other enhanced resins shall be substantiated with test data.

Table 1: CIPP Liner Properties		
	Resin Saturated Felt Tube	
Test Property	Test Value	Test Method
Flexural strength	15,000 psi	ASTM D790
Flexural modulus	725,000 psi	ASTM D790

2.5 DESIGN CRITERIA

A. The liner thickness shall be designed in accordance with the procedures of ASTM F1216, Appendix XI, ASTM D2990, ASTM 2019 (if UV cured), Appendix X1, and these Technical Specifications. All material properties used in design calculations shall be long-term (time-corrected) values. The CONTRACTOR shall familiarize itself with site conditions when preparing liner design.

B. The CONTRACTOR shall calculate the required minimum CIPP liner thickness for each pipe based on Section 2.2.E.4 of these Technical Specifications.

C. The following parameters shall be assumed for the liner design:
   1. Modulus of soil reaction, E'_s = 1,000 psi (**fully deteriorated**).
   2. Unit weight of soil = 140 pcf.
   3. The minimum ovality shall be 2.0 percent.
   4. AASHTO HS-20 Traffic loads.
   5. Safety Factor = 2.0.
   6. Groundwater from surface elevation to actual invert depth.

2.6 PAYMENT PENALTY / REDUCTION

A. A penalty will be assessed by the OWNER to the CONTRACTOR for payment on all installed CIPP liners that do not meet or exceed the minimum CIPP wall thickness requirements as stated in Technical Specification Section 02148 - paragraph 2.2.E.4. Payment to the CONTRACTOR will be reduced on CONTRACTOR's unit price per foot payment for the total length of CIPP liner installed as measured from center of upstream manhole to center of downstream manhole. Payment/reduction shall be based on the following Table 2 – Payment Penalty / Reduction:

TABLE 2 - PAYMENT PENALTY / REDUCTION	
Payment Penalty (see note 1)	**Installed Dry Cured Liner Thickness Below Minimum Design (mm)**
0%	0% up to and including 5%
10%	Greater than 5% up to and including10%
20%	Greater than 10% up to and including 20%
Rejected	Greater than 20%
Note 1 – Reduction in payment assessed in CONTRACTOR's pay request to	

2.7 HYDROPHILIC GASKET SEAL AT CIPP TERMINATION

A. The CONTRACTOR shall provide hydrophilic gasket seal at the CIPP liner terminations per ASTM F3240. The gasket seal shall produce a watertight seal between the host pipe and liner pipe at the manhole connection.

2.8 CURE TEMPERATURE MONITORING

A. The CONTRACTOR shall provide equipment and fiber optic cable for monitoring the CIPP liner wall temperature during cure along the entire length being installed. Sensor technology shall be manufactured by Vortex Technology Group LLC of Houston, Texas or approved equal.

B. Failure to submit temperature cure logs shall be grounds for rejection of installed liner.

PART 3 - EXECUTION

3.1 PREPARATORY PROCEDURES

A. Set-Up:
   1. Prior to CIPP installation, all necessary traffic control measures shall be put into place in accordance with the City of Chandler Engineering & Design Standards Manual for Public Works Construction Chapter 7 – Traffic Barricade Design and the project General Conditions.

B. Sewer Cleaning:
   1. Prior to CIPP tube installation, the CONTRACTOR shall clean the existing sewer in accordance with Technical Specification Section 02146, Sewer Pipe And Sewer Structure Cleaning. The CONTRACTOR shall clear the existing sewer of obstructions such as solids, any existing detached liner (if present), or collapsed/offset pipe that will prevent or hinder CIPP liner installation. The CONTRACTOR shall utilize techniques customized to the size and pipe configuration such as, but not limited to man entry and/or a high-pressure water spinning nozzle to ensure that the host pipe is free from any residual sediment, fats-oils-grease (FOG), or accumulated debris prior to CIPP lining. A time lapse no greater than 30 calendar days shall be allowed between initial host pipe cleaning and liner installation. If there is greater time lapse, CONTRACTOR shall re-clean or do touch up cleaning prior to installing the CIPP liner.

C. Sewer Bypassing And Dewatering:
   1. The CONTRACTOR shall be responsible for bypassing flow around their work and dewatering sewer lines in accordance with the requirements of Technical Specification Section 02145, Diversion of Sewage Flow and Dewatering.

D. Interior Pipe Verification:
   1. The interior of the sewer shall be inspected in accordance with Technical Specification Section 02147, Remote CCTV Inspection of Existing and Rehabilitated Sewers, or other means proposed by the CONTRACTOR to determine the location of conditions, which may prevent proper installation of CIPP. The CONTRACTOR shall furnish the cleaning CCTV and report to the ENGINEER

for host pipe segments that the CONTRACTOR determines existing conditions may impact the final operation of the lined pipe, either grade or condition.

E. Offset Pipe Grade:
   1. The CONTRACTOR shall bring to the attention of the ENGINEER any offset in pipe grade that is greater than five percent (5%) of the internal diameter for authorization to install CIPP liner. Installation of CIPP tube prior to obtaining authorization shall be grounds for CIPP liner rejection and non-payment.

F. Defective Lining Removal/Void Repair:
   1. The CONTRACTOR shall remove all deteriorated concrete and/or hanging, loose, or otherwise defective lining/coatings that were previously installed but have failed and that would adversely impact the profile of the CIPP liner. Once deteriorated materials are removed, CONTRACTOR shall repair host pipe interior profile back to original dimensions with approved material(s) prior to CIPP tube installation. The CONTRACTOR shall bring to the OWNER’s attention area for potential repair where evidence of structural strength deterioration has occurred, or voids are observed behind the existing host pipe wall.

G. CIPP Liner Diameter Verification:
   1. The internal diameter of the existing host pipe may be larger (or smaller) than their nominal size. It is the CONTRACTOR's responsibility to measure the actual inside diameter of the sewer to determine the appropriate size of CIPP liner to use.

H. Pre-Constructon Site Condition Documentation:
   1. CONTRACTOR shall take pre-construction videos of work areas according to the General Conditions and Technical Specification Section 02147, Remote CCTV Inspection of Existing and Rehabilitated Sewers before beginning work. It shall be the responsibility of the CONTRACTOR to review the video and bring it to the attention of the ENGINEER any site conditions that are not conducive to the lining system installation or its operations proposed. Once the CONTRACTOR has reviewed the video and accepted the existing on-site conditions, it shall be the responsibility of the CONTRACTOR to complete the work as proposed.

3.2 INSTALLATION METHODS

A. General:
   This section is intended to provide the CONTRACTOR with general guidance on the methods to be used to rehabilitate sewer pipe using the CIPP liner installation method. Nothing contained herein shall relieve the CONTRACTOR from completing the pipe rehabilitation in the most feasible, efficient, and safe manner.
   1. The CONTRACTOR shall designate the location where the CIPP felt tube would be saturated with resin ("wet-out"). Locations shall be subject to approval by the ENGINEER and applicable local agencies. The CONTRACTOR shall allow the OWNER and/or ENGINEER to inspect the materials and "wet-out" procedure.

2. If the “wet-out” location is not at the project site, the saturated CIPP tube shall be transported to the work site under controlled environmental conditions. Transport vehicles shall include a tamper resistant, sealed temperature-recording device which always records the temperature of the CIPP tube after leaving the wet-out site. The CONTRACTOR shall decide when to transport the impregnated CIPP tube to the site and when to commence insertion with respect to weather conditions.
3. The CONTRACTOR shall conduct operations in accordance with applicable OSHA standards, including but not limited to those safety requirements involving work on an elevated platform and entry into a confined space. Make suitable precautions to eliminate hazards to personnel near construction activities when pressurized air or hot water is being used.
4. The CONTRACTOR is responsible for obtaining construction / fire hydrant meters, if necessary, and for paying all applicable deposit fees and water usage fees.

B. Pre-Installation:
1. Prior to installation of the liner, the following activities are required to be completed:
   a. Receipt and approval of pre-installation Submittals by the ENGINEER.
   b. Verification of pipe condition and any obstructions by video inspection.
   c. Verification of existing laterals and location of services by flowing water, dye test, or visually with a pan and tilt head camera or other means.
   d. Cleaning of sewer main (recorded on video).
   e. Perform required point repairs at pipe locations that would prevent or hinder proper CIPP liner. The CONTRACTOR shall obtain approval for any point repairs from the ENGINEER prior to proceeding with the liner installation. The CONTRACTOR assumes all responsibility for CIPP tube quality and finished pipe grade once installation begins if prior written notification is not received and acknowledged by the ENGINEER.
   f. The CONTRACTOR is to ensure CIPP tube is free of all visible tears, holes, cuts, foreign materials, and other defects.

C. Handling:
1. The CONTRACTOR shall exercise adequate care during transportation, handling, and installation to ensure the CIPP tube material(s) are not torn, cut, or otherwise damaged. If any part or parts of the CIPP material becomes torn, cut or otherwise damaged before or during insertion, it shall be repaired or replaced in accordance with the manufacturer’s recommendations and approval by the ENGINEER before proceeding further, and at the CONTRACTOR's expense.

D. Installation Process:
1. No CIPP installations will be undertaken in weather conditions that could jeopardize the installation of the CIPP or be detrimental to the long-term performance of the CIPP. The liner will be installed by the inversion tube method as follows.
   a. INVERSION METHOD: The CIPP tube shall be saturated with a viscous thermosetting resin and lowered into the insertion pit through an inversion tube.

The inversion tube will then be inverted into the existing pipe by the hydraulic weight of a column of water or by air pressure or by a combination of a static head of water and air pressure which will invert and push the tube through the existing sewer pipe inside out, while pressing the resin impregnated side of the CIPP tube firmly against the inside walls of the existing host pipe. The smooth coated side of the CIPP tube shall become the new interior surface of the sewer pipe following inversion. The maximum inversion installation rate shall be thirty (30) feet per minute or as recommended by the CIPP tube manufacturer whichever is less. After the CIPP tube is inverted through the pipe section, the CONTRACTOR shall cure the tube by heating the water by circulating it through a boiler, where the hot water will cause the resin to chemically react and harden or by introducing steam or a combination of compressed air and steam to initiate the hardening cure process.

b. PULLED IN PLACE METHOD: Resin impregnated glass fiber tube is pulled-in place into an existing pipe using a winch followed by its inflation with compressed air pressure to expand it firmly against the wall surface of the host structure. The photo-initiated resin system in the tube is then cured by the CONTRACTOR by exposing to ultraviolet (UV) light using a light train. CIPP installation shall be in accordance with ASTM F2019. The light train for UV curing shall be assembled according to the Manufacturer's recommendations for the sewer pipe and liner diameter. Cure the liner in accordance with the curing protocol and submit record to the OWNER and ENGINEER. CONTRACTOR shall obtain samples during installation in accordance with ASTM F2019 for UV cured lining. Samples shall be taken in the presence of the OWNER or ENGINEER. The protocol and recording shall include the following minimum information – curing speed, lighting sources working and wattage, inner air pressure, exothermic temperature, date and time, length of liner, location installation.

E. Curing:

1. The curing process shall be per ASTM F1216 or similar approach recommended by the manufacturer and approved by the ENGINEER, to ensure that the liner design physical properties are attained.
2. For UV-cured CIPP lining the CONTRACTOR shall provide a curing control protocol in accordance with Section 6.7.3 of ASTM F2019 for each installation. The protocol shall include actual materials and equipment (e.g., light train) to be utilized by the CONTRACTOR. The Liner Manufacturer shall approve the control protocol in writing.
3. The rate of temperature rise and fall during heating and cooling shall not exceed two (2) degrees F per minute or manufacturer's recommendation, whichever is slower. CONTRACTOR shall submit per Technical Specification Section 01330, Submittals the manufacturer recommendation for temperature control requirements during heat–up, cure, recommended cure temperature, and length of time maintained at recommended cure temperature, and maximum rate of cool down of temperature,

and temperature when heated water can be safely released from the tube without detrimental CIPP tube shrinkage occurring.

F. Cure Temperature Monitoring:
1. The CONTRACTOR shall monitor the temperature of the CIPP liner wall to verify and document manufacturer recommended curing temperature has been achieved for pipe
15-inches in diameter and larger. A temperature monitoring system shall be placed between the host pipe and the liner in the bottom of the host pipe (invert) to record the heating and cooling that takes place on the outside of the liner.
2. The CONTRACTOR shall install and monitor temperature during the curing process with system/equipment as follows:
   a. CIPP Liner in Pipe 15-inch Diameter and Larger: Fiber optic cable along the entire length of CIPP liner in addition to point temperature sensors installed at the upstream, downstream, and intermediate (if present) access manholes. The monitoring shall be by a computer which can record the temperatures at this interface throughout the processing of the CIPP utilizing a tamper-proof database.
   b. Prior to installing the CIPP liner in the host pipe, the temperature monitoring system's function shall be confirmed by hooking it up to the computer and seeing that the sensors are reporting ambient temperatures. No more than two (2) sensors in sequence can be found faulty during this test. If three (3) or more sensors in sequence are discovered faulty, a new sensor array shall be pulled into the host pipe replacing the previously installed array; and the new array shall be again tested for its proper function.
3. As a secondary backup of liner cure temperature, the CONTRACTOR shall monitor the temperature of the CIPP tube wall to verify manufacturer recommended curing temperature has been achieved. Temperature sensors shall be placed at the upstream and downstream ends of the reach being lined to monitor the pressurized liner (air or water) temperature during the curing process. Temperature sensors shall be placed between the host pipe and the CIPP tube in the bottom of the host pipe (invert) to record the heating and cooling that takes place on the outside of the CIPP tube. Additionally, sensors shall be strategically placed at points where a significant heat sink is likely to be anticipated. The temperatures at these interfaces shall be monitored by the CONTRACTOR throughout the curing of the CIPP tube.

G. Reinstatement Of Lateral Connections:
1. It is the intent of this project that all service lateral connections be reopened.
2. Service laterals shall be reopened to 100% of original lateral pipe diameter without excavation, utilizing a remotely controlled cutting device, monitored by CCTV. The cut liner shall have no jagged edges and shall be brushed smooth with a wire brush. CONTRACTOR shall reinstate laterals back to a smooth finish with the lateral opening free of debris or obstruction to flow. CONTRACTOR shall remove any "coupons" that fall within laterals prior to performing a post-installation CIPP

CCTV. The CONTRACTOR shall certify they have a minimum of two (2) complete working cutter units plus spare key components on the site before the insertion of the liner. No additional payment shall be made for excavations for the purpose of reopening connections unless previously approved by the ENGINEER prior to the start of work. The CONTRACTOR is responsible for all costs and liability associated with such excavations and restoration work.

H. Reinstatement Of Drop Sewer Connections:
   1. The CONTRACTOR shall reinstate the opening of all vertical drop sewer connections to 100% of original drop pipe diameter. CONTRACTOR shall reinstate drop back to a smooth finish with the drop opening free of debris or obstruction to flow.

I. Release Of CIPP Cure Water:
   1. CONTRACTOR shall be responsible for notification and obtaining written authorization from the OWNER operating the downstream wastewater treatment facility prior to release of heated water into the sewer system. OWNER reserves the right, but not limited to, requesting the CONTRACTOR to restrict the rate of release of hot water into the waste stream so that elevated waste stream temperature do not detrimentally impact any biological treatment process or equipment.
      a. The Cure temperature shall be monitored exterior to the liner utilizing thermocouple sensors along with fiber optic temperature monitoring system. Circulation cure water shall be cooled down to at least 100 degrees F before releasing the hydrostatic head into the existing collection system further than one (1) mile upstream of the water reclamation facility.
      b. Cure water temperature shall be cooled to 95 degrees F if the hydrostatic head water is to be release within one (1) mile upstream of the water reclamation facility unless prior authorization and/or alternative arrangements are obtained from the OWNER.
      c. Ammonium Persulfate may be used to mitigate the presence of styrene in the cure water. The CONTRACTOR shall comply with manufacturer's recommendations on quantity and safety and shall coordinate with the downstream water reclamation facility prior to its use.
   2. The CONTRACTOR shall be responsible for all damages and pay all compliance fines imposed onto the OWNER by State Regulatory Agencies for treatment processes impacted by the release of heated water into the facility.

3.3 FINISHED PRODUCT

A. Finish:
   1. The finished CIPP shall be continuous over the entire length of an installation run. The CONTRACTOR shall be responsible for control of all material and process variables to provide a finished CIPP possessing the minimum properties specified in ASTM F1216 and supplemented herein.

2. Defects such as foreign inclusions, dry spots, pinholes, delamination, seam separation and wrinkling beyond the allowances stated in Technical Specification paragraphs 3.3.A.3 and 3.3.A.5, or as determined by the ENGINEER as affecting the integrity or strength of the CIPP, or as adversely affecting the hydraulic capacity of the CIPP, shall be repaired, or replaced at the CONTRACTOR's expense.
3. Wrinkles in the finished liner pipe which cause a backwater of one (1) inch or more or reduce the hydraulic capacity of the pipe (wrinkles which exceed five (5) percent of the pipe diameter) are unacceptable and shall be removed or repaired by the CONTRACTOR at no additional cost to the OWNER. Wrinkles in the finished liner pipe that reduce the structural stability of the pipe are unacceptable. If a void between the wrinkle and the pipe exists, the CONTRACTOR shall repair or replace that section of the pipe at no additional cost to the OWNER. Methods of repair shall be proposed by the CONTRACTOR and submitted to the ENGINEER for review.
4. Bumps or wrinkles shall be removed within ten (10) feet of a manhole insertion and/or termination end to produce a smooth wall surface which allows for a proper seal if a flow control plug installation is necessary in the future.
5. Separations of liner seams in the finished liner pipe are unacceptable and shall be removed or repaired by the CONTRACTOR at no additional cost to the OWNER. If a separation of a liner seam exists, the CONTRACTOR shall repair or replace that section of the CIPP tube at no additional cost to the OWNER. Methods of repair shall be proposed by the CONTRACTOR and submitted to the ENGINEER for approval.
6. Longitudinal shrinkage of liner beyond the interior face of the manhole wall shall be repaired. Proposed repair materials and procedures shall be submitted to the ENGINEER for approval prior to commencement of repairs.

B. Manhole Connection:
1. The CONTRACTOR shall provide a watertight seal at the sewer connection so that no leakage of fluids may infiltrate between the liner and the existing sewer surface/manhole. The cut liner shall have no jagged edges and shall be sanded or brushed smooth. After the curing of CIPP liner is complete, the liner termination ends shall be left in the manholes for a minimum of one (1) day to relieve longitudinal forces created by liner shrinkage.
2. CONTRACTOR shall install Fiber Reinforced Polymer (FRP) coating per Technical Specification Section 02720, Fiber Reinforced Polymer (FRP)to provide a durable surface and gas tight seal between the end(s) of the CIPP liner, through the manhole trough, and up the throat section of the manhole base (if present) and connect into the barrel section of the access manhole per the details in Design Drawings.

C. Vehicular Access:
1. If required all hoses/pipes used for introducing water, air, and/or steam shall be ramped during the inversion and curing process to allow for the ease of vehicular and pedestrian traffic.

D. Hose Identification:

1. All hoses/pipes shall be color-coded for identification to prevent the use of hoses/pipes used for water conveyance are not used for wastewater conveyance or visa-versa. Any hose connected to a public water supply shall be at the discretion of the OWNER and be equipped with an approved backflow prevention device.

E. Inspection:
1. The CONTRACTOR shall inspect the CIPP after installation. The inspection will be performed and recorded using remote visual television inspection equipment in accordance with Technical Specification Section 02147, Remote CCTV Inspection of Existing and Rehabilitated Sewers. If defects exist within the liner, the CONTRACTOR shall repair or replace that section of liner at no additional cost to the OWNER. Methods of repair shall be proposed by the CONTRACTOR and submitted to the ENGINEER for review and approval prior to initiating repair work. ENGINEER shall be notified a minimum of 24 hours prior to performing repair work.
2. The CONTRACTOR shall resubmit a final video showing a post inspection after the liner issues have been addressed and approved.

F. Field Testing:
1. Sampling and testing of materials: ASTM Standards
2. CIPP Testing: ASTM F1216

G. Acceptance:
1. Inspect CIPP tube by CCTV inspection per Technical Specification Section 02147, Remote CCTV of Existing and Rehabilitated Sewers
2. Visual inspection - Infiltration: NONE
3. Defects: If ENGINEER deems the following:
   a. Repairable - repair defect per Paragraph 3.3.A.
   b. Not Repairable - remove and replace the CIPP tube at no additional cost to the OWNER.

3.4 CLEANUP

A. Following inspection, the CONTRACTOR shall clean up the entire project area. The CONTRACTOR shall dispose of all excess material and debris not incorporated into the permanent installation off site.

3.5 WARRANTY

A. The CONTRACTOR shall CCTV per Technical Specification Section 02147, Remote CCTV of Existing And Rehabilitated Sewers rehabilitated **one (1) year following final completion**. A copy of the CCTV video records shall be submitted to the OWNER according to Technical Specification Section 01330, Submittals. Procedures for repair of liner defects identified shall be submitted to the OWNER for approval prior to

authorization to proceed. CCTV video investigation and repair of defects shall be at no additional cost to the OWNER.

++ END OF SECTION ++

SECTION 02220

DEMOLITIONS

PART 1 - GENERAL

1.1 DESCRIPTION

A. Scope:
   1. Provide all labor, materials, equipment and incidentals as shown on the Drawings, specified and required for demolitions, removal and disposal work.
   2. Included, but not limited to, are demolition and removals of existing materials, equipment, or work necessary to install the work as shown on the drawings, specified and required to connect same with existing work in an approved manner. Demolition includes structural concrete, appurtenances, piping, electrical and mechanical equipment, wiring and conduits, paving, curbs, walks, fencing, and similar existing facilities.
   3. Demolitions and removals which may be specified under other Sections shall conform to requirements of this Section.
   4. Pay for all landfill disposal fees.

1.2 SUBMITTALS

A. Schedule: Submit for approval proposed methods, equipment, and operating sequences. Include coordination for shut-off, capping, temporary services, continuation of utility services, and other applicable items to ensure no interruption of OWNER'S operations.

B. Shop Drawings: Submit for approval the following:
   1. A copy of this specification section, with addendum updates included, and all referenced and applicable sections, with addendum updates included, with each paragraph check-marked to indicate specification compliance or marked to indicate requested deviations from specification requirements. Check marks (✓) shall denote full compliance with a paragraph as a whole. If deviations from the specifications are indicated, and therefore requested by the CONTRACTOR, each deviation shall be underlined and denoted by a number in the margin to the right of the identified paragraph, referenced to a detailed written explanation of the reasons for requesting the deviation. The ENGINEER shall be the final authority for determining acceptability of requested deviations. The CONTRACTOR shall furnish equipment and/or services as specified if an exception and/or deviation is rejected. The remaining portions of the paragraph not underlined will signify compliance on the part of the CONTRACTOR with the specifications. Failure to include a copy of the marked-up specification sections, along with justification(s) for any requested deviations to the

specification requirements, with the submittal shall be sufficient cause for rejection of the entire submittal with no further consideration.

C. CONTRACTOR shall submit electronic copies per Specification Section 01332, Shop Drawing Procedures. Text shall be in electronic ASCII format. Drawings and figures shall be in Version 2018 or newer AutoCAD ".dwg," or pdf ".pdf" format.

1.3 JOB CONDITIONS

A. Protection:
   1. Perform all demolition and removal Work to prevent damage or injury to structures, occupants thereof and adjacent features which might result from falling debris or other causes, and so as not to interfere with the use, and free and safe passage to and from adjacent structures.
   2. Closing or obstructing of roadways, sidewalks, and passageways adjacent to the Work by the placement or storage of materials will not be permitted, and all operations shall be conducted with a minimum interference to traffic on these ways.
   3. Erect and maintain barriers, lights, sidewalk sheds, and other necessary protective devices.
   4. Repair damage to facilities to remain, or to any property belonging to the OWNER or occupants of the facilities. Comply with requirements of Specification Section 02230, CLEARING.

B. Scheduling:
   1. Carry out operations so as to avoid interference with OWNER'S operations and work in the existing facilities.

C. Notification:
   1. At least 48 hours prior to commencement of a demolition or removal, notify ENGINEER, in writing, of proposed schedule therefore. OWNER will inspect the existing equipment and mark for identification those items which are to remain the property of the OWNER. Do not start removals without the permission of the ENGINEER.

D. Explosives:
   1. Do not bring explosives on site.
   2. Explosives are not approved.

PART 2 - PRODUCTS (NOT USED)

PART 3 - EXECUTION

3.1 GENERAL

A. All materials and equipment removed from existing work, shall become the property of CONTRACTOR, except for those which are designated on the drawings to be "Salvaged", "Reused", or "Relocated" and those that the OWNER has identified and marked for their use. The OWNER may identify the materials and equipment that they want to keep during a site visit prior to the demolition work. All materials and equipment marked by the OWNER to remain the property of the OWNER shall be carefully removed by CONTRACTOR, so as not to be damaged, and shall be cleaned and stored on or adjacent to the site in a protected place specified by the ENGINEER or loaded onto trucks provided by the OWNER.

B. Dispose of all demolition materials, equipment, debris, and all other items not marked by the OWNER to remain off the site and in conformance with all existing applicable laws and regulations.

C. Pollution Controls: Use water sprinkling, temporary enclosures, and other suitable methods to limit the amount of dust and dirt rising and scattering in the air to the lowest practical level. Comply with governing regulations pertaining to environmental protection.
   1. Do not use water when it may create hazardous or objectionable conditions such as ice, flooding, and pollution.
   2. Clean adjacent structures, facilities, and improvements of dust, dirt, and debris caused by demolition operations. Return adjacent areas to conditions existing prior to the start of the Work.

D. Pavement Demolition:
   1. All asphalt and concrete pavement demolition shall terminate at cut edges. All edges shall be linear and have a vertical cut face.

3.2 STRUCTURAL REMOVALS

A. Remove structures to the lines and grades shown on the Drawings, unless otherwise directed by the ENGINEER. Where no limits are shown on the Drawings, the limits shall be 4-inches outside the item to be installed. The removal of masonry beyond these limits shall be at CONTRACTOR'S expense and these excess removals shall be reconstructed to the satisfaction of the ENGINEER, with no additional compensation to CONTRACTOR.

B. All concrete, brick, tile, concrete block, roofing materials, reinforcement, structural or miscellaneous metals, plaster, wire mesh and other items contained in or upon the

structure shall be removed and taken from the site, unless otherwise approved by the ENGINEER. Demolished items shall not be used in backfill.

C. After removal of parts or all of masonry walls, slabs and like work which tie into the Work or existing work, the point of junction shall be neatly repaired so as to leave only finished edges and surface exposed.

D. Where new anchoring materials, including bolts, nuts, hangers, welds and reinforcing steel, are required to attach the Work to the existing work they shall be included under this Section, except where specified elsewhere.

3.3 MECHANICAL REMOVALS

A. Mechanical removals shall consist of dismantling and removing of existing piping, equipment and other appurtenances as specified, shown, or required for the completion of the Work. Mechanical removals shall include cutting, capping, and plugging as required, except that the cutting of existing piping for the purpose of making connections thereto will be included under Division 15, Mechanical.

B. Existing process, water, chemical, gas, fuel oil and other piping not required for the Work shall be removed where shown on the Drawings or where it will interfere with the Work. Piping not indicated to be removed or which does not interfere with the Work shall be removed to the nearest solid support, capped and left in place. Chemical and fuel lines and tanks shall be purged and made safe prior to removal or capping. Where piping that is to be removed passes through existing walls, it shall be cut off and properly capped on each side of the wall.

C. When underground piping is to be altered or removed, the remaining piping shall be properly capped.

D. Any changes to potable water piping and other plumbing and heating system work shall be made in conformance with all applicable codes and under the same requirements as other underground piping. All portions of the potable water system that have been altered or opened shall be pressure tested and disinfected in accordance with Section 15050, Piping Systems, and Section 15051, Buried Piping Installation, and local codes. Other plumbing piping and heating piping shall be pressure tested only.

3.4 ALTERATIONS AND CLOSURES

A. Alterations shall conform with the Contract Documents, and the directions and approvals of the ENGINEER.

B. Openings in existing concrete slabs, ceilings, masonry walls, floors and partitions shall be closed and sealed as shown on the Drawings or otherwise directed by the ENGINEER. The Work shall be keyed into the existing work in a manner approved

by the ENGINEER. In general, use the same or matching materials as the existing adjacent surface. The finished closure shall be a smooth, tight, sealed, permanent closure acceptable to the ENGINEER.

3.5 CLEAN-UP

A. Properly remove from the site all debris resulting from the demolition operations as it accumulates. Upon completion of the Work, all materials, equipment, waste, and debris of every sort shall be removed and premises shall be left, clean, neat and orderly. Comply with requirements of Section 02315, Structural Excavation and Backfill, and Section 02230, Clearing.

++ END OF SECTION ++

SECTION 02230

CLEARING

PART 1 - GENERAL

1.1 DESCRIPTION

A. Scope:
   1. Provide all labor, materials, equipment and incidentals required to perform all clearing and grubbing as shown on the Drawings and specified.

B. The Work covered by this Section consists of removing and disposing of all trees, stumps, bush, roots, shrubs, vegetation, logs, rubbish, and other objectionable material from the site, as required to perform the Work.

1.2 QUALITY ASSURANCE

A. Codes and Standards: State and local laws and code requirements shall govern the hauling and disposal of trees, shrubs, stumps, roots, rubbish, debris and other matter.

1.3 JOB CONDITIONS

A. Protection:
   1. Streets, roads, adjacent property and other works and structures shall be protected throughout the entire Project. Return to original condition, satisfactory to the ENGINEER, damaged facilities caused by CONTRACTOR'S operations.
   2. Trees, shrubs, grassed and landscaped areas, which are to remain, shall be protected by fences, barricades, wrapping or other methods as shown on the Drawings, specified or approved by the ENGINEER. Equipment, stockpiles, etc. shall not be permitted within tree branch spread. Trees shall not be removed without approval of the ENGINEER, unless shown or specified.

B. Salvageable Improvements:
   1. Unless specified elsewhere, carefully remove items to be salvaged and store on premises in approved location, all in accordance with recommendations of specialists recognized in the Work involved.

1.4 GUARANTEE

A. Guarantee that Work performed under this Section will not permanently damage trees, shrubs, turf or plants designated to remain, or other adjacent work or facilities. If damage resulting from CONTRACTOR'S operations appears during the period up

to 12 months after completion of the Project, replace damaged items, at no additional cost to OWNER.

1.5 SUBMITTALS

A. Shop Drawings: Submit for approval the following:
   1. A copy of this specification section, with addendum updates included, and all referenced and applicable sections, with addendum updates included, with each paragraph check-marked to indicate specification compliance or marked to indicate requested deviations from specification requirements. Check marks (✓) shall denote full compliance with a paragraph as a whole. If deviations from the specifications are indicated, and therefore requested by the CONTRACTOR, each deviation shall be underlined and denoted by a number in the margin to the right of the identified paragraph, referenced to a detailed written explanation of the reasons for requesting the deviation. The ENGINEER shall be the final authority for determining acceptability of requested deviations. The CONTRACTOR shall furnish equipment and/or services as specified if an exception and/or deviation is rejected. The remaining portions of the paragraph not underlined will signify compliance on the part of the CONTRACTOR with the specifications. Failure to include a copy of the marked-up specification sections, along with justification(s) for any requested deviations to the specification requirements, with the submittal shall be sufficient cause for rejection of the entire submittal with no further consideration.
   2. CONTRACTOR shall submit hard copies and soft copy per Specification Section 01332, Shop Drawing Procedures. Soft copies shall be in CD format and shall include all information provided in hard copy. Text shall be in electronic ASCII format. Drawings and figures shall be in Version 2018 or newer AutoCAD ".dwg," or pdf ".pdf" format.

PART 2 - PRODUCTS (NOT USED)

PART 3 - EXECUTION

3.1 CLEARING AND GRUBBING

A. Limits of clearing shall be all areas within the Contract limit lines, except as otherwise shown on the Drawings. Damage outside these limits caused by CONTRACTOR'S operations shall be corrected at CONTRACTOR'S expense.

B. Remove from the site and properly dispose of all trees, shrubs, stumps, roots, brush, masonry, rubbish, scrap, debris, pavement, curbs, fences and miscellaneous other structures not covered under other Sections as shown on the Drawings, specified or otherwise required to permit construction of the Work. Comply with requirements of Section 02220, Demolition.

C. No cleared or grubbed material may be used in backfills or structural embankments. Comply with requirements of Section 02315, Structural Excavation and Backfill.

D. CONTRACTOR to remove existing trash and concrete pile-up from site and dispose them off to a safe location per the location per the local rules and regulations.

E. Burning on the site will not be allowed.

F. In order to avoid additional removal or damage, existing trees and shrubs shall be trimmed as required. Trimmed or damaged trees shall be treated and repaired by persons with experience in this specialty who are approved by ENGINEER. Trees and shrubs intended to remain, which are damaged beyond repair or removed, shall be replaced by CONTRACTOR at no additional cost to OWNER.

G. Control air pollution caused by dust and dirt, and comply with governing regulations.

3.2 TOPSOIL REMOVAL

A. Topsoil is defined as friable clay loam surface soil found in a depth of not less than 4- inches. Topsoil shall be substantially free of subsoil, clay lumps, stones, and other objects over 2-inches in diameter, and without weeds, roots, and other objectionable material.

B. Strip topsoil which is satisfactory to whatever depths are encountered, and in such manner as to prevent intermingling with the underlying subsoil or other objectionable material. Remove heavy growths of grass from areas before stripping.
   1. Where trees are shown on the Drawings or directed by the ENGINEER to be left standing, stop topsoil stripping a sufficient distance from such trees to prevent damage to the main root system.

C. Stockpile topsoil in storage piles in areas shown on the Drawings, or where otherwise approved by ENGINEER. Construct storage piles to freely drain surface water. Cover storage piles, if required, to prevent windblown dust.

D. Dispose of excess topsoil as waste material off site.

++ END OF SECTION ++

SECTION 02315

STRUCTURAL EXCAVATION AND BACKFILL

PART 1 - GENERAL

1.1 DESCRIPTION

A. Scope:
   1. Provide all labor, materials, equipment and incidentals required to perform all excavating, backfilling, filling and grading, and disposing of earth materials as shown on the Drawings, specified, and required for construction of manholes, vaults, cast-in-place structures, structure foundations, and other structures and facilities required to complete the Work in every respect.
   2. All necessary preparation of subgrade for slabs, foundations and pavements is included.
   3. All temporary means required to prevent discharge of sediment to water courses from dewatering systems or erosion are included.
   4. On-site excavated material will be classified for use as backfill material. Excavation materials include all materials regardless of type, character, composition, moisture, or condition thereof.
   5. Perform all earthwork as specified in this Section.

B. General: Native soils are generally suitable for use in grading fills but shall be screened to remove cobbles 4-inches and larger, and shall have less than 50% passing the No. 200 sieve. See more detailed gradation requirements in the relevant sections.

1.2 QUALITY ASSURANCE

A. Testing Services:
   1. General: Testing of materials, testing for moisture content during placement and compaction of fill materials, and of compaction requirements for compliance with technical requirements of these Specifications shall be performed by a testing laboratory as designated in Section 01451, Testing Laboratory Services Furnished by OWNER and Section 01452, Testing Laboratory Services Furnished by CONTRACTOR.
   2. CONTRACTOR’S Testing Agency Scope:
      a. Test CONTRACTOR'S proposed materials in the laboratory and/or field for compliance with these Specifications.
      b. Conduct gradation and plasticity testing on excavated spoils proposed for backfill
      c. Perform field moisture content and density tests to assure that the specified compaction of backfill materials has been obtained.
      d. Report all test results to the ENGINEER.

3. Authority and Duties of CONTRACTOR'S Testing Agency: Technicians representing the testing laboratory shall inspect the materials in the field and perform tests and shall report their findings to the ENGINEER and CONTRACTOR. When the materials furnished or Work performed fails to fulfill Specification requirements, the technician will direct the attention of the ENGINEER and CONTRACTOR to such failure.
    a. The technician shall not act as foreman or perform other duties for CONTRACTOR. Work will be checked as it progresses, but failure to detect any defective Work or materials shall not in any way prevent later rejection when such defect is discovered, nor shall it obligate the ENGINEER for final acceptance. Technicians are not authorized to revoke, alter, relax, enlarge, or release any requirements of the Contract Documents, nor to approve or accept any portion of the Work.
4. Responsibilities and Duties of CONTRACTOR:
    a. The use of testing services shall in no way relieve CONTRACTOR of the responsibility to furnish materials and construction in full compliance with the Contract Documents.
    b. To facilitate testing services:
        1) Secure and deliver to the ENGINEER or to the testing agency, without cost, preliminary representative samples of the materials he proposes to use and which are required to be tested for verification.
        2) Furnish such casual labor as is necessary to obtain and handle samples at the Work site or at other sources of material.
        3) Advise the ENGINEER'S testing agency at least two days in advance of any backfill operations to allow for completion of quality tests and for the assignment of personnel.
    c. CONTRACTOR'S Testing Service shall inspect and approve subgrades and fill layers before further construction Work is performed thereon.
    d. Responsibility belongs to CONTRACTOR to accomplish the specified compaction for backfill, fill, and other earthwork, and to control his operations by confirmation tests to verify and confirm that CONTRACTOR has complied, and is complying at all times, with the requirements of these Specifications concerning compaction, control, and testing.
    e. The frequency of CONTRACTOR'S confirmation tests shall be not less than as follows; each test location for trenches shall include tests for each layer, type, or class of backfill from bedding to finish grade.
        1) Trenches for structures:
            a) In Open Fields: Four locations every 200 linear feet, each lift.
            b) Along Dirt or Gravel Roads or Off Traveled Right-of-way: Four locations every 200 linear feet, each lift.
            c) Crossing Paved Roads: Two locations along each crossing.
            d) Under Pavement Cuts or Within Two Feet of Pavement Edges: Two locations every 200 linear feet, each lift.

e) Compaction test shall be taken at least every 1 foot of total lift and 20 feet lineally.

2) For structural backfill: On 10-foot intervals on all sides of the structure for every compacted lift but no less than one per lift on each side of the structure for structures less than 10-feet long on a side.

3) In embankment or fill: One per 250 square feet on every compacted lift.

4) Base material: Four per 100 square feet on every compacted lift.

5) Footing Subgrade: For each strata of soil on which footings will be placed, conduct at least one test to verify required design bearing capacities. Subsequent verification and approval of each footing subgrade may be based on a visual comparison of each subgrade with related tested strata, when acceptable to ENGINEER.

6) Paved Areas and Building Slab Subgrade: Make at least one field density test of subgrade for every 150 square feet of paved area or building slab, but in no case less than three tests. In each compacted fill layer, make one field density test for every 150 square feet of overlaying building slab or paved area, but in no case less than three tests.

7) Foundation Wall Backfill: Take at least six field density tests, at locations and elevations as directed by the ENGINEER.

f. Copies of the test reports shall be submitted promptly to the ENGINEER. CONTRACTOR'S tests to be performed by a soils testing laboratory acceptable to the ENGINEER.

g. Demonstrate the adequacy of compaction equipment and procedures before exceeding any of the following amounts of earthwork quantities:

1) 50 linear feet of trench backfill.

2) 5 cubic yards of structural backfill.

3) 100 cubic yards of embankment work.

4) 10 cubic yards of base material.

h. Until the specified degree of compaction on the previously specified amounts of earthwork is achieved, no additional earthwork of the same kind shall be performed.

i. Periodic compliance tests will be determined as needed by the ENGINEER to verify that compaction is conforming to the requirements previously specified, at no cost to OWNER. Remove the overburden above the level at which the ENGINEER wishes to test and shall backfill and recompact the excavation after the test is complete. CONTRACTOR to pay for third party testing as directed by the ENGINEER. Testing quantity shall be estimated at 20-percent of CONTRACTOR testing requirments.

j. If compaction fails to conform to the specified requirements, remove and replace the backfill at proper density or shall bring the density up to specified level by other means acceptable to the ENGINEER. Subsequent tests required to confirm and verify that the reconstructed backfill has been brought up to specified density shall be paid by CONTRACTOR.

CONTRACTOR'S confirmation tests to be performed in a manner acceptable to the ENGINEER. Frequency of confirmation tests for remedial Work shall be double that amount specified for initial confirmation tests.

B. Permits and Regulations:
   1. Obtain all necessary permits for Work in roads, rights-of-way, railroads, etc. Also, obtain permits as required by local, state and federal agencies for discharging water from excavations.
   2. Perform excavation Work in compliance with applicable requirements of governing authorities having jurisdiction.

C. Reference Standards: Comply with applicable provisions and recommendations of the following, except as otherwise shown on the Drawings or specified. Where the requirements of more than one code or standard are applicable, the more restrictive will govern. The codes that will be in effect at the completion of the design phase of the project will be used.
   1. ASTM A 36/A 36M, Specification for Carbon Structural Steel.
   2. ASTM A 328/A 328M, Specification for Steel Sheet Piling.
   3. ASTM D 422, Method for Particle-Size Analysis of Soils.
   4. ASTM D 427, Test Methods for Shrinkage Factors of Soils by the Mercury Method.
   5. ASTM D 698, Test Method for Laboratory Compaction Characteristics of Soil.
   6. ASTM D 1556, Test Method for Density and Unit Weight of Soil in Place by the Sand-Cone Method.
   7. ASTM D 2166, Test Method for Unconfined Compressive Strength of Cohesive Soils.
   8. ASTM D 2922, Test Methods for Density of Soil and Soil-Aggregate in Place by Nuclear Methods (Shallow Depth).
   9. ASTM D 4318, Test Method for Liquid Limit, Plastic Limit and Plasticity Index of Soils.
   10. AISC Specifications for the Design, Fabrication, and Erection of Structural Steel for Buildings.
   11. OSHA Standard, Title 29, Code of Federal Regulations, Part 1926, Section .650 (Subpart P - Excavations).
   12. The Code of the City of Chandler, Arizona.
   13. Uniform Standard Specifications for Public Work Construction by the Maricopa Association of Governments (MAG) as supplemented by the City of Chandler, Section 206, Structure Excavation and Backfill, Section 604, Placement of Controlled Low Strength Material, Section 702, Base Materials, Section 725, Portland Cement Concrete, Section 728, Controlled Low Strength Material. Where there is a conflict between MAG Standard Specifications as supplemented by the City of Chandler and this Specification, provisions of this Specification shall govern.

1.3 SUBMITTALS

A. Shop Drawings: Submit for approval the following:
   1. Excavation and Backfill Submittals:
      a. Excavation Plan: Prior to start of excavation operations, a written plan shall be submitted to demonstrate compliance with OSHA Standard 29 CFR Part 1926.650. As a minimum, excavation plan shall include:
         1) Name of competent person.
         2) Excavation method(s) or protective system(s) to be used.
         3) Copies of "Manufacturer's Data" or other tabulated data if protective system(s) are designed on the basis of such data.
      b. Excavation and backfill requirements detailing sheeting and bracing, or other protective system(s), dewatering systems, cofferdams, and underpinning.
      c. Shop Drawings shall be prepared by a Registered Professional Engineer, licensed in the State of Arizona, recognized as an expert in the specialty involved. Drawings shall be submitted to ENGINEER for record purposes only. Calculations shall not be submitted. Drawing submittals will not be checked and will not imply approval by ENGINEER of the Work involved. Sole responsibility for designing, installing, operating and maintaining whatever system is necessary to satisfactorily accomplish all necessary sheeting, bracing, protection, underpinning and dewatering belongs to CONTRACTOR.
      d. Samples of all materials, including select backfill, general backfill, crushed stone and sand shall be submitted to the ENGINEER and the testing service. Samples of the proposed material shall be submitted at least 14 days in advance of its anticipated use.
   2. Test Reports:
      a. Testing laboratory shall submit copies of the following reports directly to ENGINEER, with copy to CONTRACTOR:
         1) Tests on borrow material.
         2) Tests on footing subgrade.
         3) Field density tests.
         4) Optimum moisture - maximum density curve for each soil used for backfill.
         5) Tests of actual unconfined compressive strength or bearing tests of each strata.
         6) Reports of observations for conformance of borrow material to the Project Geotechnical Report.

B. CONTRACTOR shall submit electronic copies per Specification Section 01332, Shop Drawing Procedures.

1.4 JOB CONDITIONS

A. Existing Structures: The Drawings show certain surface and underground structures adjacent to the Work. This information has been obtained from existing records. It is not guaranteed to be correct or complete and is shown on the Drawings for the convenience of CONTRACTOR. Explore ahead of the required excavation to determine the exact location of all existing structures. Structures shall be supported and protected from damage by CONTRACTOR. If they are broken or damaged, restore them immediately, at no additional cost to the OWNER.

B. Existing Utilities: Locate existing underground utilities in the areas of the Work. If utilities are to remain in place, provide adequate means of protection during all operations.
   1. Should uncharted or incorrectly charted piping or other utilities be encountered during excavation, consult piping or utility owner and ENGINEER immediately for directions as to procedure. Cooperate with OWNER and utility owner in keeping services and facilities in operation. Repair damaged utilities to satisfaction of utility owner.
   2. Do not interrupt existing utilities serving facilities occupied and used by OWNER or others, except when permitted in writing by ENGINEER and then only after acceptable temporary utility services have been provided.
   3. Demolish and completely remove from site existing underground utilities indicated to be removed. Coordinate with utility companies for shut-off of services if lines are active.

C. Use of Explosives:
   1. The use of explosives will not be permitted.
   2. Do not bring explosives onto site or use in the Work without prior written permission from authorities having jurisdiction. Provide copy of authorization to ENGINEER. Sole responsibility for handling, storage, and use of explosive materials when their use is permitted belongs to CONTRACTOR.

D. Protection of Persons and Property: Barricade open excavations occurring as part of the Work and post with warning lights. Operate warning lights during hours from dusk to dawn each day and as otherwise required.
   1. Protect structures, utilities, sidewalks, pavements, and other facilities from damage caused by settlement, lateral movement, undermining, washout and other hazards created by earthwork operations.

E. Dust Control: Conduct all operations meeting the requirements specified in Section 01414, Earthmoving and Dust Control.

F. Roadways and Walks: Unless otherwise approved by ENGINEER, excavated material and materials of construction shall be so deposited, and the Work shall be so conducted, as to leave open and free for pedestrian traffic all crosswalks, and for

vehicular traffic a roadway not less than ten feet in width. All hydrants, valves, fire alarm boxes, letter boxes, and other facilities which may require access during construction shall be kept accessible for use. During the progress of the Work, maintain such crosswalks, sidewalks, and roadways in satisfactory condition and the Work shall at all times be so conducted as to cause a minimum of inconvenience to public travel, and to permit safe and convenient access to private and public property along the line of the Work.

PART 2 - PRODUCTS

2.1 SOIL MATERIALS

A. Select Backfill:
   1. Select backfill for use beneath concrete slabs, cast-in-place concrete structures, manholes, asphaltic pavements and building foundations shall be crushed aggregate base course conforming to MAG Section 702 and meet the physical properties listed in Table 702-1, Aggregate Base Coarse. The depth of select backfill shall be a minimum of 12-inches unless shown otherwise on the Drawings.

B. Backfill and Fill Materials:
   1. Materials acceptable for use as backfill against walls, manholes, foundations, and other structures shall be stockpiled native sandy clay or granular soils obtained from on-site excavations and which are uniformly mixed, contain no organic matter, nor contain rocks or fragments greater than 4-inches in size, nor have greater than 50-percent passing the 200 sieve. The maximum expansion of on-site materials shall be 1-percent as performed on a sample remolded to approximately 100-percent of the maximum dry density as determined in accordance with ASTM D 698 at two percent below optimum moisture content under a 100-psf surcharge pressure.
   2. Backfill and fill materials from off-site sources shall consist of silty or clayey sandy soils which are uniformly mixed, contain no roots, branches, or other evident organic or deleterious matter and which have a Plasticity Index less than fifteen when tested in accordance with ASTM D 4318. The maximum particle size of imported soils or native fill shall be 4-inches with a grading required to provide compaction without nesting. The maximum expansion of off-site materials shall be 1-percent as performed on a sample remolded to approximately 100-percent of the maximum dry density as determined in accordance with ASTM D 698 at two percent below optimum moisture content under a 100-psf surcharge pressure.
   3. All materials for use as backfill and fill material shall be tested by the laboratory and approved by the ENGINEER.
   4. CONTRACTOR to take sample of excavated material and determine soil properties. If on-site material is determined to be unsuitable as determined by

the ENGINEER, select backfill or approved off-site backfill and fill materials shall be used.

5. Fill adjacent to structures is classified as backfill to a distance measured horizontally from the structure that is equal to the depth from the finished grade. Outside these limits the fill is classified as fill, unless otherwise specified.
6. Demolition spoils or materials shall not be used as or mixed with backfill material.

C.

C. Fill Material for Embankments.
   1. Fill materials for use as embankments, and as miscellaneous landscaping materials exterior to plant facilities, shall consist of soils obtained from on-site excavations or off-site sources that are uniformly mixed, contain no organic material, rocks or fragments greater than 3-inches in size.
   2. All materials for use as described above shall be tested by the laboratory and approved by the ENGINEER prior to use.

D. Pipe Bedding and Pipe Backfill:
   1. Refer to Specification 15051.

PART 3 - EXECUTION

3.1 INSPECTION

A. Provide ENGINEER with sufficient notice and with means to examine the areas and conditions under which excavating, filling, and grading are to be performed. ENGINEER will notify CONTRACTOR if conditions are found that may be detrimental to the proper and timely completion of the Work. Do not proceed with the Work until unsatisfactory conditions have been corrected in an acceptable manner.

3.2 SITE PREPARATION

A. Clear all areas to be occupied by permanent construction or embankments of all trees, brush, roots, stumps, logs, wood and other materials and debris. Clean and strip subgrades for fills and embankments of vegetation, sod, topsoil and organic matter. All waste materials shall be removed from site and properly disposed of by CONTRACTOR. Burning is not to be permitted. Refer to and comply with the requirements of Section 02230, Clearing.

3.3 EXCAVATION

A. Perform all excavation required to complete the Work as shown on the Drawings, specified and required. Excavations shall include earth, sand, clay, gravel, hardpan, boulders not requiring drilling and blasting for removal, decomposed rock, pavements, rubbish and all other materials within the excavation limits, except rock.

B. Excavations for structures shall be open excavations. Provide excavation protection system(s) required by ordinances, codes, law and regulations to prevent injury to workmen and to prevent damage to new and existing structures or pipelines. Unless shown on the Drawings or specified otherwise, protection system(s) shall be utilized under the following conditions.
   1. Excavation Less Than Five Feet Deep: Excavations in stable rock or in soil conditions where there is no potential for a cave-in may be made with vertical sides. Under all other conditions, excavations shall be sloped and benched, shielded, or shored and braced.
   2. Excavations More Than Five Feet Deep: Excavations in stable rock where there is no potential for a cave-in may be made with vertical sides. Under all other conditions, excavations shall be sloped and benched, shielded or shored and braced.
   3. Excavation protection system(s) shall be installed and maintained in accordance with drawings submitted under Article 1.3, above.

C. Where the structure is to be placed below the ground water table, well points, cofferdams or other acceptable methods shall be used to permit construction of said structure under dry conditions. Dry conditions shall prevail until concrete has reached sufficient strength to withstand earth and hydrostatic loads. In addition, protect excavation from flooding until all walls and floor framing up to and including grade level floors are in place and backfilling has begun. Water level shall be maintained below top of backfill at all times.

D. Pumping of water from excavations shall be done in such a manner to prevent the carrying away of unsolidified concrete materials, and to prevent damage to the existing subgrade.

E. The elevation of the bottom of footings shown on the Drawings shall be considered as approximate only and ENGINEER may order such changes in dimensions and elevations as may be required to secure a satisfactory footing. All structure excavations shall be hand-trimmed to permit the placing of full widths, and lengths of footings on horizontal beds. Rounded and undercut edges will not be permitted.

F. When excavations are made below the required grades, without the written order of ENGINEER, they shall be backfilled with select backfill material, as directed by ENGINEER, at the expense of CONTRACTOR.

G. Excavations shall be extended sufficiently on each side of structures, footings, etc., to permit setting of forms, installation of shoring or bracing or the safe sloping of banks.

H. Subgrades for roadways and structures shall be firm, dense, and thoroughly compacted and consolidated; shall be free from mud, muck, and other soft or unsuitable materials; and shall remain firm and intact under all construction

operations. Subgrades which are otherwise solid, but which become soft or mucky on top due to construction operations, shall be reinforced with select backfill material. The finished elevation of stabilized subgrades shall not be above subgrade elevations shown on the Drawings. Proof roll all subgrades prior to placing of select fill and general fill material.

I. Material Storage: Stockpile satisfactory excavated materials in approved areas, until required for backfill or fill. Place, grade and shape stockpiles for proper drainage.
   1. Locate and retain soil materials away from edge of excavations.
   2. Dispose of excess soil material and waste materials as specified hereinafter.
   3. Stockpiled excavated soils for use as subsequent fill shall be classified by laboratory as on-site granular or sandy clay soils. Use and placement of fill shall be performed as specified for each class.
   4. Excess soil from excavations shall be disposed of off-site. Disposal shall be in accordance with state and local regulatory requirements.

J. Where ENGINEER considers the existing material beneath the bedding material unsuitable, CONTRACTOR shall remove same and replace it with select backfill.

3.4 UNAUTHORIZED EXCAVATION

A. All excavation outside the lines and grades shown on the Drawings, and which is not approved by ENGINEER, together with the removal and disposal of the associated material shall be at CONTRACTOR'S expense. Unauthorized excavations shall be filled and compacted with select backfill by CONTRACTOR at their expense.

3.5 DRAINAGE, EROSION CONTROL AND DEWATERING

A. Erosion Control:
   1. In general, the construction procedures outlined herein shall be implemented to assure minimum damage to the environment during construction. Take any and all additional measures required to conform to the requirements of applicable codes and regulations and the requirements specified in Section 01412, Stormwater Pollution Prevention Plan and Permit.
   2. Whenever possible, access and temporary roads shall be located and constructed to avoid environmental damage. Provisions shall be made to regulate drainage, avoid erosion and minimize damage to vegetation.
   3. Where areas must be cleared for storage of materials or temporary structures, provisions shall be made for regulating drainage and controlling erosion, subject to the ENGINEER'S approval.
   4. Temporary measures shall be applied to control erosion and to minimize the silting of the existing waterways, and natural ponding areas. Such measures shall include, but are not limited to, the use of berms, baled straw silt barriers, gravel or crushed stone, mulch, slope drains and other methods. These

temporary measures shall be applied to erodible materials exposed by any activities associated with the construction of this Work.

a. Special care shall be taken to eliminate depressions that could serve as mosquito pools.
b. Temporary measures shall be coordinated with the construction of permanent drainage facilities and other Work to the extent practicable to assure economical, effective, and continuous erosion and silt control.
c. Provide special care in areas with steep slopes. Disturbance of vegetation shall be kept to a minimum to maintain stability.

5. Remove only those shrubs and grasses that must be removed for construction. Protect the remainder to preserve their erosion-control value.
6. Install erosion and sediment control practices where shown on the Drawings and according to applicable standards, codes and specifications. The practices shall be maintained in effective working condition during construction and until the drainage area has been permanently stabilized.
7. Mulching to be used for temporary stabilization.
   a. Suitable Materials for Mulching:
      1) Unrotted straw or salt hay: 1-1/2 to 2 tons/acre.
      2) Asphalt emulsion or cutback asphalt: 600 to 1200 gal. /acre.
      3) Wood-fiber or paper-fiber (hydroseeding): 1500 lbs./ acre.
      4) Mulch netting (paper, jute, excelsior, cotton or plastic).
   b. Straw or salt hay mulches should be immediately anchored using peg and twine netting or mulch anchoring tool or liquid mulch binders.
8. After stabilization, remove all straw bale dikes, debris, etc., from the site.
9. In the event of any temporary Work stoppage, take steps any temporary or environmental damage to the area undergoing construction.
10. In the event CONTRACTOR repeatedly fails to satisfactorily control erosion and siltation, the OWNER reserves the right to employ outside assistance or to use its own forces to provide the corrective measures indicated. The cost of such work, plus engineering costs, will be deducted from monies due CONTRACTOR.
11. Prevent blowing and movement of dust from exposed soil surfaces and access roads to reduce on and off-site damage and health hazards. Control may be achieved by irrigation in which the site shall be sprinkled with water until the surface is moist. The process shall be repeated as needed.

B. Drainage and Dewatering:
   1. Provide and maintain adequate drainage and dewatering equipment to remove and dispose of all surface water and ground water entering excavations, or other parts of the Work. Each excavation shall be kept dry during subgrade preparation and continually thereafter until the structure to be built, therein is inspected by the ENGINEER and backfill operations have been completed and approved.
      a. The different working areas on the site shall be kept free of surface water at all times. Install drainage ditches and dikes and shall perform all pumping

and other Work necessary to divert or remove rainfall and all other accumulations of surface water from the excavations and fill areas. The diversion and removal of surface water shall be performed in a manner that will prevent the accumulation of water behind temporary structures or at any other locations within the construction area where it may be detrimental.

b. Water used for working or processing, resulting from dewatering operations, or containing oils or sediments that will reduce the quality of the water downstream of the point of discharge, shall not be directly discharged. Such waters shall be diverted through a settling basin or filter before being discharged.

c. Responsibility belongs to CONTRACTOR for the condition of any pipe, conduit or channel used for drainage purposes and all such pipes, conduits or channels shall be left clean and free of sediment.

d. Remove water from excavations as fast as it collects.

2. Provide, install and operate sufficient trenches, sumps, pumps, hose, piping, well points, deep wells, etc., necessary to depress and maintain the ground water level below the base of the excavations during all stages of construction operations. The ground water table shall be lowered in advance of excavation, for a sufficient period of time so as to permit dewatering of fine grain soils, and maintained two feet below the lowest subgrade excavation made until the structure has sufficient strength and weight to withstand horizontal and vertical soil and water pressures from natural ground water. The system shall be operated on a 24-hour basis and standby pumping facilities and personnel shall be provided to maintain the continued effectiveness of the system. If, in the opinion of the ENGINEER, the water levels are not being lowered or maintained as required by these Specifications, install additional or alternate dewatering devices as necessary, at no additional cost to the OWNER.

   a. Elements of the system shall be located so as to allow a continuous dewatering operation without interfering with the construction of the permanent Work. Where portions of the dewatering system are located in the area of permanent construction, submit details of the methods he proposes to construct the permanent Work in this location for the approval of the ENGINEER. Controls of ground water shall continue until the permanent construction provides sufficient dead load to withstand the hydrostatic uplift of the normal ground water, until concrete has attained sufficient strength to withstand earth and hydrostatic loads, and until all waterproofing Work has been completed. Dispose of all water removed from the excavation in such a manner so as not to endanger any portion of the Work under construction or completed. Convey water from the excavations in a closed conduit. Before discontinuing dewatering operations or permanently permitting the rise of the ground water level, computations shall be made to show that any structure affected by the water level rise is protected by backfill or other means to sustain uplift. Use a safety factor of 1.25 when making these computations.

b. Dewatering operations shall not be discontinued without the prior authorization of the ENGINEER.
c. Design of dewatering system, including both drawings and calculations, shall be performed by a Registered Professional Engineer in the State of Arizona and shall be employed by CONTRACTOR. Dewatering system shall be designed so as to avoid settlement or damage to existing structures and utilities.

C. Disposal of Water Removed by Dewatering System:
1. CONTRACTOR'S Dewatering System will discharge to on-site storm drain system in accordance with State and Federal regulations.
2. Dispose of all water removed from the excavation in such a manner as not to endanger public health, property, or any portion of the Work under construction or completed.
3. Dispose of water in such a manner as to cause no inconvenience to OWNER, ENGINEER, or others involved in Work about the site.
4. Convey water from the construction site in a closed conduit. Do not use trench excavations as temporary drainage ditches
5. Meter the quantity of water discharged in a manner acceptable to the Arizona Department of Water Resources.
6. The discharged water from the Dewatering System shall be purchased from the Arizona Department of Water Resources at the prevailing rate.

3.6 SHEETING, SHORING AND BRACING FOR STRUCTURE EXCAVATIONS

A. General:
1. Used material shall be in good condition, not damaged or excessively pitted. All steel or wood sheeting designated to remain in place shall be new. New or used sheeting may be used for temporary work.
2. All timber used for breast boards (lagging) shall be new or used, meeting the requirements for Douglas Fir Dense Construction grade with a bending strength not less than 1500 psi or Southern Pine No. 2 Dense.
3. All steel work for sheeting, shoring, bracing, cofferdams etc., shall be designed in accordance with the provisions of the "Specifications for the Design, Fabrication and Erection of Structural Steel for Buildings", of the AISC except that field welding will be permitted.
4. Steel sheet piling shall be manufactured from steel conforming to ASTM A 328/A 328M. Steel for soldier piles, wales and braces shall be new or used and shall conform to ASTM A 36/A 36M.
5. Maintain shoring and bracing in excavations regardless of time period excavations will be open. Carry down shoring and bracing as excavation progresses.
6. Unless otherwise shown on the Drawings, specified, or ordered, all materials used for temporary construction shall be removed when Work is completed.

Such removal shall be made in a manner not injurious to the structure or its appearance or to adjacent Work.

7. Provide permanent steel sheet piling or pressure creosoted timber sheet piling wherever subsequent removal of sheet piling might permit lateral movement of soil under adjacent structures. Cut off tops as required, but at least three feet below grade, and leave permanently in place.
8. The clearances and types of the temporary structures, insofar as they affect the character of the finished Work, and the design of sheeting to be left in place, will be subject to the approval of ENGINEER; but responsibility for the adequacy of all sheeting, shoring, bracing, coffer-damming, etc., belongs to CONTRACTOR.
9. Safe and satisfactory sheeting, shoring and bracing shall be the entire responsibility of CONTRACTOR.
10. All municipal, County, State and Federal ordinances, codes, regulations and laws shall be observed.

B. Removal of Sheeting and Bracing:
   1. Remove sheeting and bracing from excavations, unless otherwise directed in writing by ENGINEER. Removal shall be done so as to not cause injury to the Work. Removal shall be equal on both sides of excavation to ensure no unequal loads on pipe or structure.
   2. Defer removal of sheeting and bracing, where removal may cause soil to come into contact with concrete, until the following conditions are satisfied:
      a. Concrete has cured a minimum of seven days.
      b. Wall and floor framing up to and including grade level floors are in place.

3.7 TRENCH SHIELDS

A. Excavation of earth material below the bottom of a shield shall not exceed the limits established by ordinances, codes, laws and regulations.

B. When using a shield for the installation of structures, the bottom of the shield shall not extend below the top of the bedding for the structures.

C. When a shield is removed extreme care shall be taken to prevent damage to the structures or the disturbance of the bedding for structures. Structures that are disturbed shall be removed and reinstalled as specified.

3.8 PLACEMENT OF FILL AND BACKFILL

A. General:
   1. All select backfill and backfill required for structures, provide the finished grades shown on the Drawings and as described herein shall be furnished, placed and compacted by CONTRACTOR.

2. Backfill excavations as promptly as Work permits, but not until completion of the following:
   a. Acceptance by the ENGINEER of construction below finish grade, including damp proofing, waterproofing and perimeter insulation.
   b. Inspection, testing, approval, and recording of locations of underground duct banks.
   c. Removal of concrete formwork.
   d. Removal of shoring and bracing, and backfilling of voids with satisfactory materials.
   e. Removal of trash and debris.
3. Fill containing organic materials or other unacceptable material shall be removed and replaced with approved fill material as specified.

B. Placement of Select Backfill, Backfill and Fill:
1. Select backfill shall be placed to the grades shown on the Drawings. The lift thickness and compaction moisture content range given herein are approximate. These values shall be finally determined from the laboratory test results on the fill materials. Testing requirements shall be as specified in Paragraph 3.8.E., below.
2. All select backfill shall be placed in horizontal loose lifts, not exceeding 8-inches in thickness, and shall be mixed and spread in a manner assuring uniform lift thickness after placing. Each lift shall be compacted by not less than two complete coverage's of the specified compactor. Select backfill shall be placed to the underside of all concrete slabs. The fill material shall extend a minimum of 16-inches outside the face of each structure and be a minimum thickness as specified in Paragraph 2.1.A. The maximum slope of select backfill to the subgrade shall be one vertical to one horizontal.
3. Backfill and fill around and outside of structures and over select backfill shall be deposited in layers not to exceed 8-inches in uncompacted thickness and mechanically compacted, using platform type tampers. Compaction of structures backfilled by rolling will be permitted provided the desired compaction is obtained and damage to the structure is prevented. Compaction of select backfill and/or backfill by inundation with water will not be permitted. All materials shall be deposited as specified herein and as shown on the Drawings.
4. The material shall be placed at a moisture content and density as specified under Paragraph 3.8.E., below. Provide equipment capable of adding measured amounts of water to the backfill and/or select backfill material to bring it to a condition within the range of the required moisture content. Provide equipment capable of discing, aerating, and mixing the soil to ensure reasonable uniformity of moisture content throughout the fill material and to reduce the moisture content of the borrow material by air drying, if necessary. If the subgrade or lift of earth material must be moisture conditioned before compaction, the fill material shall be sufficiently mixed or worked on the subgrade to ensure a uniform moisture content throughout the lift of material to be compacted.

Materials at moisture content in excess of the specified limit shall be dried by aeration or stockpiled for drying.

5. No backfill or fill material shall be placed when free water is standing on the surface of the area where the fill is to be placed. No compaction of fill will be permitted with free water on any portion of the fill to be compacted. No fill shall be placed or compacted in a frozen condition or on top of frozen material. Any fill containing organic materials or other unacceptable material previously described shall be removed and replaced with approved fill material prior to compaction.
6. Compaction shall be performed with equipment suitable for the type of fill material being placed. Select equipment that is capable of providing the minimum density required by these Specifications. Hand operated compacting equipment shall be used within a distance of ten feet from the wall of any completed below grade structure. Equipment shall be provided that is capable of compacting in restricted areas next to structures and around piping. The effectiveness of the equipment selected shall be tested at the commencement of compacted fill Work by construction of a small section of fill within the area where fill is to be placed. If tests on this section of fill show that the specified compaction is not obtained, increase the amount of coverages, decrease the lift thicknesses and/or obtain a different type of compactor.
7. Levels of backfill against concrete walls shall not differ by more than two feet on either side of walls, unless walls are adequately braced or all floor framing is in place up to and including grade level slabs. Particular care shall be taken to compact structure backfill, which will be beneath pipes, roads, or other surface construction or structures. In addition, wherever a trench passes through structure backfill, the structure backfill shall be placed and compacted to an elevation 12-inches above the top of the pipe before the trench is excavated. Compacted areas, in each case, shall be adequate to support the item to be constructed or placed thereon.
8. The compaction requirements specified are predicated on the use of normal materials and compaction equipment. In order to establish criteria for the placement of a controlled fill so that it will have compressibility and strength characteristics compatible with the proposed structural loadings, a series of laboratory compaction and/or compressive strength tests shall be performed on the samples of materials submitted by CONTRACTOR. From the results of the laboratory tests, the final values of the required percent compaction, the acceptable compaction moisture content range, and the maximum permissible lift thickness will be established for the fill material and construction equipment proposed.
9. Control the water content of fill material during placement within the range necessary to obtain the compaction specified. In general, the moisture content of the fill shall be within two percent of the optimum moisture content for compaction as determined by laboratory tests. Perform all necessary work to adjust the water content of the material to within the range necessary to permit the compaction specified. Do not place fill material when free water is standing

on the surface of the area where the fill is to be placed. No compaction of fill will be permitted with free water on any portion of the fill to be compacted.

10. Compact fill shall be compacted by at least two coverages of all portions of the surface of each lift by compaction equipment. One coverage is defined as the condition obtained when all portions of the surface of the fill material have been subjected to the direct contact of the compactor.
11. If the specified densities are not obtained because of improper control of placement or compaction procedures, or because of inadequate or improperly functioning compaction equipment, perform whatever Work is required to provide the required densities. This Work shall include complete removal of unacceptable fill areas, and replacement and recompaction until acceptable fill is provided.
12. If any settlement occurs, repairs will be at CONTRACTOR'S expense. Make all repairs and replacements necessary within 30 days after notice from ENGINEER or OWNER.

C. Compaction Density Requirements:

1. The degree of compaction required for all types of fills shall be as listed below. Material shall be moistened or aerated as necessary to provide the moisture content that will facilitate obtaining the specified compaction.

Material	Required Minimum Density-Percent Compaction (ASTM D 698)	*Maximum Uncompacted Lift (inches)
Subgrade and Subbase Fill:		
Below concrete slabs on grade	100	8
Below base of footings or mats, structural slabs	100	8
Below asphalt concrete paving	95	8
** Backfill and Fill:		
More than 5 feet below final grade	100	8
Less than 5 feet below grade	95	8
Aggregate Base Course (Select Backfill):		
Below concrete slabs or mats	95	8
Below asphalt paving	100	8
Landscape Areas	95	8

* Where applicable.

** Backfill shall not be used for support of facilities which are susceptible to damage from differential settlement of the fill section relative to walls.

All fill must be wetted and thoroughly mixed to achieve optimum moisture content, ±two percent, with the following exceptions: On site clayey soils optimum to plus two percent.

Natural undisturbed soils or compacted soil subsequently disturbed or removed by construction operations shall be replaced with materials compacted as specified above.

2. CONTRACTOR'S testing service shall perform tests necessary to provide data for selection of fill material and control of placement water content.
3. Field density tests, to ensure that the specified density is being obtained, shall be performed by CONTRACTOR'S testing service during each day of compaction Work.
4. If the tests indicate unsatisfactory compaction, provide the additional compaction necessary to obtain the specified degree of compaction. All additional compaction Work shall be performed by CONTRACTOR, at no additional cost to the OWNER, until the specified compaction is obtained. This Work shall include complete removal of unacceptable (as determined by the ENGINEER) fill areas and replacement and recompaction until acceptable fill is provided.

D. Replacement of Unacceptable Excavated Materials: In cases where over-excavation for the replacement of unacceptable soil materials is required, the excavation shall be backfilled to the required subgrade with select backfill material and thoroughly compacted as specified in Paragraph 3.8.C., above. Sides of the excavation shall be sloped in accordance to the maximum inclinations specified for each structure location.

3.9 GRADING

A. General: Uniformly grade areas within limits of grading under this Section, including adjacent transition areas. Smooth subgrade surfaces within specified tolerances, compact with uniform levels or slopes between points where elevations are shown on the Drawings, or between such points and existing grades.

B. Grading Outside Building Lines: Grade areas adjacent to building lines to drain away from structures and to prevent ponding. Finish surfaces free from irregular surface changes, and as follows:
   1. Turfed Areas or Areas Covered with Gravel, Stone, Wood Chips, or Other Special Cover: Finish areas to receive topsoil or special cover to within not more than 1-inch above or below the required subgrade elevations.

2. Walks: Shape surface of areas under walks to line, grade and cross-section, with finish surface not more than 1-inch above or below the required subgrade elevation.
3. Pavements: Shape surface of areas under pavement to line, grade and cross-section, with finish surface not more than 1/2-inch above or below the required subgrade elevation.

C. Grading Surface of Fill Under Building Slabs: Grade smooth and even, free of voids, compacted as specified, and to required elevation. Provide final grades within a tolerance of 1/2-inch when tested with a ten foot straightedge.

D. Compaction:
1. After grading, compact subgrade surfaces to the depth and percentage of maximum density for each area classification.

3.10 PAVEMENT SUBBASE COURSE

A. General: Place subbase material, in layers of specified thickness, over ground surface to support pavement base course.

B. Grade Control: During construction, maintain lines and grades including crown and cross-slope of subbase course.

C. Shoulders: Place shoulders along edges of base course to prevent lateral movement. Construct shoulders of acceptable soil materials, placed in such quantity to compact to thickness of each base course layer. Compact and roll at least a 12-inch width of shoulder simultaneously with compacting and rolling of each layer of base course.

D. Placing: Place base course material on prepared subgrade in layers of uniform thickness, conforming to indicated cross-section and thickness. Maintain optimum moisture content for compacting base material during placement operations.
1. When a compacted base course is shown on the Drawings to be 6-inches thick or less, place material in a single layer. When shown on the Drawings to be more than 6-inches thick, place material in equal layers, except no single layer more than 6-inches or less than 3-inches in thickness when compacted.

3.11 DISPOSAL OF EXCAVATED MATERIALS

A. Material removed from the excavations which does not conform to the requirements for fill or is in excess of that required for backfill shall be hauled away from the project site by CONTRACTOR and disposed of in compliance with ordinances, codes, laws and regulations at no additional cost to the OWNER. Refer to and comply with the requirements of Section 02230, Clearing.

3.12 RESTORING AND RESURFACING EXISTING ROADWAYS AND FACILITIES

A. Place 1-1/2-inches of temporary bituminous pavement immediately after backfilling trenches in paved roadways which are to be retained for permanent use. Maintain the surface of the paved area over the trench in good and safe condition during progress of the entire Work, and promptly fill all depressions over and adjacent to the trench caused by settlement of backfilling. The permanent replacement pavement shall be equal to that of the existing roadways, unless otherwise specified.

B. Pavement, gutters, curbs, sidewalks or roadways disturbed or damaged by the CONTRACTOR'S operations, except areas designated "Pavement" or "Proposed Pavement", shall be restored by CONTRACTOR at their own expense to as good condition as they were previous to the commencement of the Work and in accordance with applicable local and state highway specifications.

3.13 TEMPORARY FENCING

A. Furnish and install a temporary fence surrounding excavations and Work area, including the stockpile and storage areas. Fence shall have openings only at vehicular, equipment and worker access points.

3.14 ENVIRONMENTAL PROTECTION AND RESTORATION

A. Refer and comply with the requirements of Section 01412, Stormwater Pollution Prevention Plan and Permit.

++ END OF SECTION ++

SECTION 02532

POLYMER CONCRETE INSERTS

PART 1 - GENERAL

1.1 DESCRIPTION

A. Scope:
   1. The purpose of this specification is to provide requirements to furnish corrosion proof polymer concrete precast structural inserts for structural rehabilitation of existing manholes to eliminate existing corrosion, infiltration and inflow.

1.2 WORK OF THIS SECTION

A. The requirements of this section includes providing a structural polymer concrete manhole insert system such that manholes become structurally sound and impervious to ground water, soil, debris, and are resistant to hydrogen sulfide corrosion. Manhole rehabilitation riser sections shall be constructed of precast sections comprised of resin, sand, aggregate, and FRP bar reinforcement.

B. The CONTRACTOR to provide by-passing of flows around manholes if required per Specification Section 02145, Diversion of Sewage Flow and Dewatering.

C. The CONTRACTOR to obtain confined space entry permit to perform the work.

D. The CONTRACTOR is responsible for the complete installation of the manhole insert system including the removal of all old loose material, any pre-installation surface preparation and any structural manhole insert component.

1.3 QUALITY ASSURANCE

A. Manhole rehabilitation riser sections shall conform to the following design criteria:
   1. ASTM C 478 Standard Specification for Precast Reinforced Concrete Manhole Sections
   2. ASTM C 579 Standard Test Methods for Compressive Strength of Chemical-Resistant Mortars, Grouts, Monolithic, Surfacing, and Polymer Concretes
   3. ASTM C 443 Standard Specification for Joints for Concrete Pipe and Manholes Using Rubber Gaskets
   4. ASTM C 580 Standard Test Method for Flexural Strength and Modulus of Elasticity of Chemical-Resistant Mortars, Grouts, Monolithic Surfacings, and Polymer Concretes
   5. ASTM C 857 Standard Practice for Minimum Structural Design Loading for Underground Utility Structures

6. ACI 350-06 Code Requirements for Environmental Engineering Concrete Structures & Commentary
7. ACI 440.1R-15 Guide for the Design and Construction of Structural Concrete Reinforced with Fiber-Reinforced Polymer (FRP) Bars
8. ACI 548.6R-96 Polymer Concrete-Structural Applications State-of-the-Art Report
9. ASTM D 648 Test Method for Deflection Temperature of Plastics Under Flexural Load in Edgewise Position
10. ASTM D 6783 Standard Specification for Polymer Concrete Pipe
11. ASTM D 2584 Test Method for Ignition Loss of Cured Reinforced Resins
12. ASTM C 923 Standard Specifications for Resilient Connectors between Concrete Manholes Structures and Pipe
13. ASTM C 990 Standard Specification for Joints for Concrete Pipe, Manholes and Precast Box Sections using Preformed Flexible Joint Sealants
14. ASTM C 497 Test Methods for Concrete Pipe, Manhole Sections, or Tile

1.4 SUBMITTALS

A. The CONTRACTOR shall provide submittal information to the ENGINEER in accordance with Specification Section 01330, Submittals.

B. Manufacturer's Qualifications:
   1. Manufacturers of polymer concrete insert shall have a minimum of ten years of experience producing structural inserts, and shall be able to show evidence of at least five installations in satisfactory operation in the last five years.

C. Installer's Qualifications: The installer shall be able to show experience in the installation of the proposed structural manhole insert for more than five (5) years. References shall be provided for a minimum of five (5) jobs. Information provided shall include a description of the job, the location of the job, the value of the job, the client name, and the client contact person for the job including name, title, address, and phone number.

D. Submit manufacturer's data and details of following items for approval:
   1. Shop drawings of manhole sections, base units and construction details, jointing methods, materials, and dimensions.
   2. Summary of criteria used in manhole design including, as minimum, material properties, loading criteria, and dimensions assumed. Include certification from manufacturer that polymer concrete manhole design meets or exceeds the load and strength requirements of ASTM C 478 and ASTM C 857, reinforced in accordance with ACI 440.1R-15. Include current ISO 9001:2015 certification.
   3. Materials to be used in fabricating pipe drop connections.
   4. Materials to be used for grade adjustments.
   5. Materials to be used for bench area finishing.
   6. Proof of independent Chemical Resistance testing conducted in accordance with the Standard Specifications for Public Works Construction.

7. Submitted sealed drawings by a registered Professional Engineer in the Arizona.

E. Comply with the requirements of Specification Section 01332, Shop Drawing Procedures.

F. CONTRACTOR shall submit an electronic copy per Specification Section 01332, Shop Drawing Procedures.

G. A copy of this specification section, with addendum updates included, and all referenced and applicable sections, with addendum updates included, with each paragraph check-marked to indicate specification compliance or marked to indicate requested deviations from specification requirements. Check marks (✓) shall denote full compliance with a paragraph as a whole. If deviations from the specifications are indicated, and therefore requested by the CONTRACTOR, each deviation shall be underlined and denoted by a number in the margin to the right of the identified paragraph, referenced to a detailed written explanation of the reasons for requesting the deviation. The ENGINEER shall be the final authority for determining acceptability of requested deviations. The remaining portions of the paragraph not underlined will signify compliance on the part of the CONTRACTOR with the specifications. Failure to include a copy of the marked-up specification sections, along with justification(s) for any requested deviations to the specification requirements, with the submittal shall be sufficient cause for rejection of the entire submittal with no further consideration.

1.5 MANUFACTURER

A. Approved structure manufacturers:
   1. Armorock Polymer Concrete; www.armorock.com 702-824-9702
   2. Or Equal

PART 2 - PRODUCTS

2.1 REQUIREMENTS

A. Insert system shall contain sufficient structural strength to carry all live, dead and hydrostatic loads for the installation. The insert system will be capable of providing all necessary structural support and would installed on to existing rehabilitated manhole bench.

B. Corrosion proof polymer concrete manhole insert riser, cone sections and related components shall conform to the structural intent of ASTM C – 478.

C. Riser sections, eccentric cones and flat lids (with approval on an individual basis by city) are to be provided with flush edge configurations assembled with the appropriate alignment guides and butyl mastic to make a continuous and uniform insert structure manhole.

D. Polymer concrete structural insert manhole riser and cone sections are to be provided in various lengths in combination to provide correct height with fewest joints.

E. The polymer concrete structural insert will have a minimum wall thickness of 2-inches and an outside diameter clearance of 1.5-inches, assuming the existing structure is intact with original inside diameter. Additional wall thickness may be required for interior dimensions in excess of 60-inches.

2.2 DESIGN CRITERIA

A. Polymer Concrete Structural Manhole risers and cones shall be designed by manufacturer to meet the intent of ASTM C 478 with allowable compositional and sizing differences as designed by the polymer concrete manufacturer.
   1. AASHTO HS-20 design or as required loading applied to manhole cover and transition and base slabs.
   2. Polymer manholes will be designed based upon live and dead load criteria in ASTM C 857 and ACI 350-06.
   3. Reinforcement – Shall use acid resistant reinforcement (FRP Bar) in accordance with ACI 440.1R-06 as applicable for polymer concrete design.
   4. Polymer Concrete Mix Design shall consist of thermosetting resin, sand, and aggregate. No Portland cement shall be allowed as part of the mix design matrix. All sand and aggregate shall be inert in an acidic environment.

PART 3 - INSTALLATION

A. Manhole installation should strictly follow the manufactures recommended installation procedures.
   1. Excavate the area around the manhole as necessary to provide for removal of existing cone and castings while preventing soil and debris from falling into the manhole.
   2. Follow all requirements for safety and ventilation in accordance with all applicable federal, state and local requirements.
   3. Provide means, labor and equipment to prevent solid waste contamination during construction activities. If necessary, install and operate sewage diversion pumping equipment to maintain sewage flows without backup, overflow or spill as per specification 02145, Diversion of Sewage Flow and Dewatering.
   4. Make repairs necessary to existing manhole in order to receive inserts per contract drawings. Power -wash / clean any loose debris from wall areas. Remove dirt, grease, and debris in bench area to prepare bench surfaces for resurfacing. Remove all debris. Repair any active leaks. Repair and level the bench to prepare for polymer insert installation per contract drawings. Saw cut polymer riser section if necessary, to accommodate pipe entry and bench slopes.
   5. Depending on invert configuration the bench area should be prepared by building up the bench section with a Portland cement and sand mixture to provide a clean level

surface to receive the riser. This build up should allow for a level surface above the existing top of the highest pipe. If pipe inverts are severely staggered the initial polymer sleeve can be modified in the field to accommodate the difference in bench slopes. After grout has set, lower the first riser section, clean and wipe down the polymer riser wall above the bench to allow for application of the FRP per Specification Section 02720, Fiber Reinforced Polymer.

6. When the new bench configuration is sufficiently dry and clean, a shell coating of FRP will be built over the bench. The FRP shell should continue a minimum of 4-feet and 6-inches up the polymer riser face to allow for polymer interlinking or as shown per the Contract Drawings. No additional surface coating is required as the riser sections are structural and corrosive proof throughout.
7. All non-booted or flexible coupler pipe entry areas will be grouted by product as listed per the OWNER'S approved products list.
8. After the initial bottom seal has cured the additional remaining riser sections and cone shall be installed using the appropriate wall alignment guides, gaskets and/or mastic. The risers will be offloaded and lifted into place with approved manufacturer's lifting device. No other handling apparatus will be acceptable for handling material.
9. Fill the annular space between old and new structure with a half sack slurry mix / mixed fill, stabilized sand or stone (85-percent standard proctor) or a backfill material shall be subject to approval by ENGINEER and OWNER.
10. Install city provided grade rings and frame and cover, level to grade. Grout where required using product as listed per OWNER'S approved products list.
11. Finish the remainder of the backfill, remove any deleterious materials and debris from the manhole and replace pavement if required.
12. Upon completion of the installation process the CONTRACTOR shall remove all surplus materials, protective coverings, accumulated rubbish, and thoroughly clean all surfaces and repair any other installation related damage as required by OWNER. All external surface areas shall be repaired and returned to its original or required condition. All debris shall be collected and hauled off to a proper disposal site as required by local, state and federal regulations.

B. Certification / Warranty / Inspection
1. Provide certification to the OWNER for final acceptance of material and installation. The material supplier shall provide a copy of the appropriate test results that show that the polymer material meets the requirements listed in this specification and for any other qualified specification required by the OWNER for this project at time of bid.
2. Facility Quality Control should be maintained by adhering to ISO 9001:2018 for manufacturing. All manufacturers to be ISO 9001:2018 certified. All fabrication to take place in an all polymer concrete production facility.
3. Manufacturer to provide references of 5 previous projects in the last 5 years performed with both OWNER and CONTRACTOR for reference and review by OWNER. Polymer concrete shall be cast in a polymer only facility and shall not be manufactured in a cementitious concrete facility.

4. The installing CONTRACTOR shall demonstrate applicable experience and performance history by submitting references from a minimum of 3 other rehabilitation projects or shall have a minimum of five years' experience installing standard sanitary sewer manholes and a certification of training from the manufacturer on a structural manhole insert system.
5. The polymer concrete structural insert riser, cone and flat lid (with approval on an individual basis by city) sections shall be subject to inspection and approval by the OWNER or the ENGINEER. At the time of inspection all material will be examined for specification compliance and approved drawings. Any sections damaged after delivery and not deemed repairable by the Manufacturer's Representative and ENGINEER will be removed and replaced at CONTRACTOR's expense.
6. Manufacturer shall provide OWNER with a 50 year corrosion warranty on the structural inserts at close of project with date of installation and other project information clearly shown.
7. Project Warranty: The contractor shall warrant all material and workmanship performed under this contract for a period of **one (1) year** from the date of final acceptance or as stated in the project Contract Documents whichever is longer.
8. Material Warranty: The manhole inserts shall be free of defects that will affect the long-term line and operation of the manhole. The CONTRACTOR shall warrant in writing all materials provided and work performed under this contract for a period of **five (5) years** from the date of final acceptance.
9. Insert: Insert material(s) shall be tested for a design life of minimum for **fifty (50) years** against deterioration from H2S corrosion and typical chemical found in municipal sanitary sewer.

++ END OF SECTION ++

SECTION 02720

FIBER REINFORCED POLYMER (FRP)

PART 1 - GENERAL

1.1 DESCRIPTION

A. This specification is intended to provide guidelines and performance requirements for the rehabilitation of structures using internally and externally bonded fiber reinforced polymer (FRP) composite systems. The rehabilitation system described herein shall include a glass fiber reinforced polymer (GFRP) as the main reinforcement system. The FRP can also include layers of other materials to increase stiffness of the FRP composite system in a cost-effective manner. The additional materials used to increase the stiffness of the FRP system may be proprietary to the FRP material supplier. Any materials used for the FRP system shall be subject to the approval of the ENGINEER.

1. Scope:
   a. The work includes furnishing of all materials, labor, equipment, and services for the supply, installation, and finish of structural strengthening and/or rehabilitation using a FRP system.
   b. The CONTRACTOR shall be licensed in the State of Arizona and shall include all engineering, labor, materials, tools, equipment, appliances, and services required to design, deliver, furnish all items necessary for the proper execution and completion of the work as shown in the Contract Documents, as specified herein and/or as required by job conditions. A detailed design of the FRP system for the specific site conditions shall be included with the installation of the FRP system by the FRP installer selected by the CONTRACTOR. All items not shown or specified, but which are necessary for the proper execution and completion of the Work, shall be provided by the CONTRACTOR.
   c. The extent of the FRP composite system applied to shall be as defined herein and as shown on the Design Drawings.
   d. The CONTRACTOR shall cooperate and coordinate with all other trades in executing the work described in the Contract Documents.
   e. The CONTRACTOR shall deliver finished product(s) including all materials, labor, equipment, and services necessary for product installation, all quality controls and material samples required for performance tests, final inspection, and warranty work, all as specified in these Contract Documents and at the quantities of each component to complete the work.
   f. The prices submitted by the CONTRACTOR shall include all costs of permits, labor, equipment, and materials for the various items necessary for rehabilitation materials and processes in accordance with these Technical Specifications complete and in place, including all items of work not specifically identified herein which are required to make the product perform as intended. All CONTRACTOR costs

to deliver the final product shall be included in the respective lump sum and/or unit price bid items depicted in the Proposal.

g. It shall be the responsibility of the CONTRACTOR to monitor the weather and make necessary adjustments in means and methods while work is being conducted.

1.2 SAFETY REQUIREMENTS:

A. The CONTRACTOR shall conform to all work safety and health requirements of pertinent regulatory agencies and shall secure the site for working conditions in compliance with the same. The CONTRACTOR shall perform existing material testing as required by regulatory regulation requirements and provide/install/maintain such signs and/or other devices as are necessary for safety at the work site.

B. Sewers and appurtenant structures are considered confined spaces and are subject to federal, state, and local regulations governing confined space entry and safety procedures. The CONTRACTOR shall obtain all necessary permits required to enter and work in confined spaces.

1.3 NOTIFICATION:

A. It shall be the CONTRACTOR's responsibility to notify businesses and the public The CONTRACTOR shall notify all utility companies involved whenever a utility is to be cut, tapped, moved, or in any way disturbed from its original placement. Sufficient notice shall be given to the utility company so that its users can be informed of any disruption of service. Such notice shall be given no less than 48 hours in advance.

B. It is the CONTRACTOR's responsibility to inform the ENGINEER of construction activities which may lead to interruption in pedestrian or vehicular traffic or sewer service. The CONTRACTOR shall provide 72-hour notice prior to construction to verify all applicable businesses and residents have been alerted.

1.4 QUALITY CONTROL

A. Reference Standards: Comply with applicable provisions and recommendations of the following, except as otherwise shown on the Drawings or specified.
   1. ACI 117-90, Specifications for Tolerances for Concrete Construction and Materials, and Commentary.
   2. ACI 224.1R-0, Causes, Evaluation, and Repair of Cracks in Concrete Structures.
   3. ACI 224R-01, Control of Cracking in Concrete Structures.
   4. ACI 440R-07, State-of-the-Art Report on Fiber Reinforced Plastic Reinforcement for Concrete Structures.

B. ACI—American Concrete Institute
   1. 503R-93: Use of Epoxy Compounds with Concrete.
   2. 503.4-R92: Standard Specifications for Repairing Concrete with Epoxy Mortars.

3. 503.6R-97: Guide for the Application of Epoxy and Latex Adhesives for Bonding Freshly Mixed and Hardened Concretes.
4. 546R-04: Concrete Repair Guide.

C. ASTM- American Society for Testing and Materials
1. D3039: Test Method for Tensile Properties of Polymer Matrix Composite Materials
2. D3418: Test Method for Transition Temperatures of Polymers by Differential Scanning Calorimetry.
3. D5687: Guide for Preparation of Flat Composite Panels with Processing Guidelines for Specimen Preparation.
4. D7565: Standard Test Method for Determining Tensile Properties of Fiber Reinforced Polymer Matrix Composites Used for Strengthening of Civil Structures.
5. D7290: Standard Practice for Evaluating Material Property Characteristic Values for Polymeric Composites for Civil Engineering Structural Applications.
6. D638 Standard Test Method for Tensile Properties of Plastics. D695 Standard Test Method for Compressive Properties of Rigid Plastics.
7. D790: Standard Test Methods for Flexural Properties of Unreinforced and Reinforced Plastics and Electrical Insulating Materials.
8. D543: Standard Practices for Evaluating the Resistance of Plastics to Chemical Reagents.

D. NACE International
1. SSPC-SP12 / NACE 5: Surface Preparation and Cleaning of Steel and Other Hard Materials by High- and Ultra High- Pressure Water Jetting Prior to Recoating.
2. SSPC-SP13 / NACE 6: Surface Preparation of Concrete.

E. ICRI- International Concrete Repair Institute
1. No. 03732: Selecting and Specifying Concrete Surface Preparation for Sealers, Coatings, and Polymer Overlays.
2. No. 03733: Guide for Selecting and Specifying Materials for Repairs of Concrete Surfaces.

1.5 CERTIFIED INSTALLER

A. The CONTRACTOR must be trained and certified by the FRP material supplier and approved by the OWNER and ENGINEER for installation of the FRP system. A training outline for the certification program shall be submitted to the OWNER or ENGINEER for review. The CONTRACTOR shall provide evidence that the on-site Superintendent responsible for supervision of the FRP installation crew has received the FRP material supplier's training.

B. The certified installer of the FRP system shall show experience in the installation of the proposed rehabilitation method for all jobs within the last five (5) years. Information provided shall include a description of the job, the location of the job, the value of the job,

the Owner name, and the Owner contact person for the job including name, title, address, and phone number.

C. The CONTRACTOR shall appoint a Quality Assurance Manager who will be on-site full-time during FRP installation to take full responsibility for the quality of the work. The Quality Assurance Manager shall be fully certified by the FRP material supplier.

1.6 SURFACE PREPARATION

A. The CONTRACTOR shall perform surface preparation per Technical Specification Section 02146, Sewer Pipe and Sewer Structure Cleaning

1.7 PERFORMANCE WORK STATEMENT (PWS)

A. A Performance Work Statement (PWS) shall be submitted by the CONTRACTOR for the approval of OWNER and ENGINEER. The PWS shall include submittals consisting of Design Drawings, sketches, FRP material supplier's literature, catalog descriptions, or other descriptions in sufficient detail to allow a decision for submittal acceptance.

1.8 SUBMITTALS

A. The CONTRACTOR shall submit the following information to the OWNER or ENGINEER in accordance with Technical Specification Section 01330, Submittals.
   1. Performance work statement (PWS).
   2. Certifications of applicator with written consent from the FRP material supplier that the CONTRACTOR has been trained in proper application of FRP material supplier's systems.
   3. Physical and mechanical properties shall be provided of each proposed FRP system and other components, including test results conducted per the ASTM standards as applicable to the project. Physical properties shall, at the minimum include:
      a. Laminate density, Laminate Shore D hardness (ASTM D2240).
      b. Corrosion resistance (ASTM D543).
      c. Fully cured resin water absorption (ASTM D570).
      d. Glass transition temperature (ASTM E1640).
      e. Fabric ply thickness, resin cure times.
      f. Volatile organic compound (VOC) of laminate materials (ASTM D2369).
      g. FRP fabric roll dimensions range.
   4. Mechanical properties shall, at the minimum include:
      a. Minimum ultimate and characteristic design tensile strength.
      b. Elongation percent.
      c. Tensile modulus of the laminate in fiber direction (per ASTM D3039. D7290, respectively).
      d. Minimum design laminate thickness per layer.
   5. FRP material supplier's Safety Data Sheets (SDS) for all materials brought on-site.
   6. Product Data Sheets (PDS) for the components of the FRP system.

7. Safety Plan in compliance with local, state, and federal requirements.
8. Detailed installation plan describing all work items.
9. FRP material supplier test data.
10. FRP system design ENGINEER's qualifications and the criteria incorporated into the design. Design calculations submitted shall be sealed by a professional Structural ENGINEER registered in the State of Arizona.
11. Product installation procedure.
12. QA/QC plan including field sampling and testing.
13. FRP Design Drawings and Technical Specifications.
14. Documentation of CONTRACTOR's Experience: CONTRACTOR shall provide references for all jobs within the last five (5) years that were either completed or under construction using the proposed rehabilitation method and materials.
15. Qualifications, certifications / training received of installer including experience on similar projects.
16. Submit FRP material supplier's published product and installation literature and published quality control testing criteria data for the proposed FRP system.
17. Submit independent test report showing that the physical properties of the proposed materials meet the requirements of these Technical Specifications and will meet or exceed the physical properties given in the FRP material supplier's published literature submitted as required by Part 2 – PRODUCTS.
18. Submit a report of the proposed installation process and procedures as directed by the FRP system to be used. The report shall include information specific to the installation instructions and any unique site condition(s) that must be taken into consideration including surface preparation, environmental limitations such as humidity, surface temperature, set times, access coordination, installation timing and identification and any coordination requirements/requests from the OWNER or ENGINEER.
19. Shop Drawings: The CONTRACTOR shall provide shop drawings of proposed materials for approval prior to ordering. Shop drawings shall depict:
    a. All measurements made by the CONTRACTOR to verify critical dimensions.
    b. Material(s) proposed for construction.
    c. Critical dimensions, jointing, overlap, and connections, necessity for fasteners, and anchors with sizes, spacing, and location if proposed, connections, attachments, and openings.
    d. Color(s).
20. Documentation of the control checks for materials used in the fabrications and each part of the fabrication materials including resin and fabric(s).
21. Warranty: CONTRACTOR shall submit warranty documents signed by an officer of the company and notarized stating the terms and conditions of the warranty identified in Paragraph 1.11 – WARRANTY.
22. Any item the CONTRACTOR proposes to utilize as an "or equal" to that proposed in the Contract Documents.

1.9 QUALITY ASSURANCE/QUALITY CONTROL

A. Examination: Each component part shall be examined by the CONTRACTOR for dimensional requirements, soundness, and workmanship in accordance with ASTM C478.

B. Composition Control: The FRP installer shall control and document the fiber to resin ratio content for each part of the installation. Documentation of the control checks shall be maintained by the CONTRACTOR and FRP installer. Proper content shall be shown by fiber to resin ratio usage rate checks, in accordance with the FRP material supplier's recommended material composition.

C. Testing Records: Records of all testing shall be submitted in accordance with Technical Specification Section 01330, Submittals.

1.10 INSPECTION POINTS

A. The CONTRACTOR shall keep the OWNER or ENGINEER informed of milestone progress for the following items:
   1. Completion of removal of unsound material and pressure wash cleaning.
   2. Completion of leveling/seal material placement and surface preparation prior to FRP placement.
   3. Completion of FRP placement.
   4. Completion of FRP protective coating.

1.11 WARRANTY

A. The CONTRACTOR shall replace promptly and at no expense to the OWNER, any FRP system materials which fail during the warranty period. A failure is defined as blistering, cracking, embrittlement, softening, peeling, pitting, or adhesion failure to the substrate. Warranty work shall include all ancillary items including, but not limited to permits, traffic control, exposure, flow control, labor, equipment, bypass pumping, third party quality control inspection and all other work required to complete the repair/replacement work. Any testing performed during construction, including but not limited to, spark testing and adhesion testing, shall not in any way modify this Warranty or relieve the CONTRACTOR from its responsibility to repair or replace a failed FRP system. Mechanical damage due to maintenance operations or ancillary work on the FRP system by others is excluded from this Warranty. Warranty and durations are described below:
   1. Project Warranty: The CONTRACTOR shall warrant all materials and workmanship performed under this contract for a period of **five (5) years** from the date of final acceptance of the project and Letter of Acceptance by the OWNER or as stated in the project Contract Documents whichever is longer.
   2. Materials Warranty: The FRP system installed shall be free of defects that will affect the long-term life and operation of the system. The CONTRACTOR shall warrant in writing all materials provided under this contract for a period of **five (5) years** from the date of final acceptance of the project and Letter of Acceptance by the OWNER.

3. Design Life: Material(s) shall provide a design life of a minimum of **fifty (50) years** against deterioration from H2S corrosion and typical chemicals found in municipal sanitary sewage.

PART 2 - PRODUCTS

2.1 ACCEPTABLE FRP MATERIAL SUPPLIERS & COMPOSITE STRENGTHENING SYSTEM

A. General
1. The Materials for the FRP system must be suitably qualified, compliant with industry standards and properties provided herein, and supplied by a reputable FRP material supplier approved by the OWNER or ENGINEER. Before the materials are ordered or work is performed, the CONTRACTOR must identify which materials are proposed to be utilized and from which FRP material supplier(s) CONTRACTOR proposes to obtain the materials.
2. Quality Control Testing and Certification: FRP material supplier shall certify that all material(s) provided conforms to the project specification or provide a proposed substitution per paragraph 1.9. The quality control test results for all proposed materials shall be submitted per Technical Specification Section 01330, Submittals.
3. Labeling, packaging, and storage shall include any health hazard warnings, precautions for handling and recommended first aid procedures in case of contact.
4. All materials used shall conform to the project Technical Specifications and other specifications referenced within and subject to the approval of the OWNER or ENGINEER.

B. Design Loads
1. The FRP system shall be designed for the following loads as they apply for the specific site conditions:
   a. Earth load (a long-term loading).
   b. External pressure from ground water to ground surface elevation. (a long-term loading).
   c. Live load (a short-term loading).
   d. Internal working pressure (a long-term loading, where applicable)
   e. Water weight (a long-term loading)
   f. Host pipe weight (a long-term loading)
   g. Wind loads (if applicable)
   h. Seismic (if applicable)

2.2 GLASS FABRIC

A. Glass fabric layers may be used where loading conditions allow.

B. A glass fabric layer shall be used to create a dielectric barrier if the host pipe is conducive to electricity (steel, iron, etc.). The minimum dielectric constant (κ) shall be 4 (ASTM D150) for the dielectric barrier. Glass fabric shall have the minimum physical and mechanical properties shown in the table:

Longitudinal (0°) Direction:			
Weight (Fabric Only)	20 oz/yd^2 (670 g/m^2)	27 oz/yd^2 (904 g/m^2)	20 oz/yd^2 (670 g/m^2)
Fiber Orientation	Uniaxial	Uniaxial	Biaxial
Tensile Strength	63.7 ksi (439 MPa)	85.2 ksi (587 MPa)	20 ksi (138 MPa)
Tensile Modulus	2,940 ksi (20,270 MPa)	3,980 ksi (27,440 MPa)	1,500 ksi (10,342 MPa)
Ultimate Elongation	2.20%	2.30%	2.10%
Breaking Force	2,365 lb./in. (4,140 N/cm)	3,490 lb./in. (6,110 N/cm)	1,120 lb./in. (1,961 N/cm)
Transverse (90°) Direction:			
Tensile Strength	N/A	N/A	20 ksi (138 MPa)
Tensile Modulus	N/A	N/A	1,500 ksi (10,342 MPa)
Ultimate Elongation	N/A	N/A	2.10%
Breaking Force	N/A	N/A	1,120 lb./in. (1,961 N/cm)
Ply Thickness	.037 in	N/A	0.040 in. (1.0 mm)

2.3 ALTERNATIVE FABRICS

A. Alternative fabrics can be used for improved ring stiffness. Such materials can be proprietary and are subject to approval. Proposed alternative fabrics shall be submitted per Technical Specification Section 01330, Submittals. Although revealing the chemical composition of alternative systems is at the discretion of the FRP material supplier, the physical and mechanical properties of such materials and the overall system are subject to the review and approval process.

2.4 SATURATING RESIN – POLYMER

A. Fabrics shall be saturated with a two component, high strength, and low viscosity structural epoxy or other resin system as listed in Section 2.5. The resin shall have low viscosity and long pot life, with a fast cure time designed for high volume saturation of heavy reinforcement fabrics using a saturation machine or hand tools as per project requirements to saturate the fabric thoroughly and uniformly.

1. The resin system shall be resistant to service environment conditions, including but not limited to moisture, corrosive gases, elevated temperature, and chemicals in the fluid flowing inside the municipal sanitary sewer host pipe.
2. The resin system shall not be diluted with any organic solvents such as a thinner.
3. The resin system shall not be used outside of the FRP material supplier's specified pot life.
4. The resin system shall not be applied on cold or frozen surfaces.
5. Only moisture tolerant resins shall be allowed to be applied on wet surfaces.
6. The temperature and moisture range for application shall be within the FRP material supplier's specified values.

B. Primer: For systems requiring a primer, the primer shall have sufficiently low viscosity to penetrate the concrete substrate and provide an adhesive bond for the thickened resin applied.

C. Thickened Resin: A thickened resin system, which consists of the saturating resin and fumed silica (or similar), or the specified tack coat, both supplied by the FRP material supplier as premixed or mixed at the site according to the FRP material supplier's recommended procedure, shall be used to provide a smooth surface for the application of the FRP laminate. The thickened resin system shall be used to fill in surface voids and even out the concrete substrate. It is permissible to use a thin coat of thickened epoxy between laminae to enhance adhesion.

D. Saturating Resins: Saturating resins shall be 100% solids formulation with low odor conforming to the minimum physical and mechanical properties as shown in the table below.

(The remainder of this page is left intentionally blank)

Epoxy Resin Properties	
Color – Part "A" is pigmented syrup, Part "B" is amber liquid.	
Viscosity Mixed at 770 F (250 C)	1,500 – 1,600 cps
Pot Life at 770 F (250 C)	3 – 4 h (thin film set time)
Cure time (>55 °F)	24 h
Density at 392 ºF (200 ºC)	Part A: 70.5 lb./ft^3 (1.13 kg/L) Part B: 62.4 lb./ ft^3 (1.00 kg/L)
Tensile Strength (ASTM D638) Tensile Modulus (ASTM D638)	7,150 psi (49 MPa) 289,000 psi (1,992 MPa)
Flexural Strength (ASTM D790) Flexural Modulus (ASTM D790)	11,140 psi (77 MPa) 252,400 psi (1,740 MPa)
Compressive Strength (ASTM D695) Compressive Modulus (ASTM D695)	13,000 psi (90 MPa) 350,000 psi (240 MPa)
Water Absorption (% gain) in 24 hours	< 1%
Expansion Coefficient [-37.40 – 40.10 ºC] Expansion Coefficient [1,200 – 2,220 ºC]	78 ×10^{-6} m/m ºC 151.8 ×10^{-6} m/m ºC

2.5 OTHER MATERIALS

A. The CONTRACTOR shall provide compatible primer, filler and other materials recommended by the FRP material supplier as needed for the proper installation of the surface bonded FRP system. Vinyl ester resins can be used to saturate the FRP fabrics as an alternative to epoxy. The vinyl ester (or epoxy) resins shall have the minimum physical and mechanical properties as provided in the Table below. It should be noted that use of vinyl ester resins will require additional safety measures when applied in confined space due to styrene or other monomer emissions. Cure times of vinyl ester resins vary in a wide range, and if the project requires faster cure times than those provided by the FRP material supplier in ambient temperature, then heating of resin during application should be considered commensurate with the FRP material supplier's curing schedule.

Sample Epoxy or Vinyl Ester Resin Properties Table	
Viscosity (ISO 2555)	200 – 250 cps
Gel Time	30 min
Density	62.4 lb./ ft3 (1.00 kg/L)
Tensile Strength (ASTM D638) Tensile Modulus (ASTM D638)	12,800 psi (88 MPa) 460,000 psi (3.2 GPa)
Flexural Strength (ASTM D790) Flexural Modulus (ASTM D790)	22,000 psi (153 MPa) 500,000 psi (3.5 GPa)
Compressive Strength (ASTM D695)	17,600 psi (121 MPa)
Water Absorption (% gain) in 24 hours	< 1%
Expansion Coefficient [-37.40 – 40.10 ºC] Expansion Coefficient [1,200 – 2,220 ºC]	78×10^{-6} m/m ºC 151.8×10^{-6} m/m ºC

PART 3 - EXECUTION

3.1 GENERAL PROCEDURES

A. The design of the FRP reinforcement shall conform to the design provisions given for the project and applicable standards.

3.2 INSTALLATION BY THE WET LAYUP METHOD

A. The CONTRACTOR may propose installation techniques and design improvements to meet the project goals and design requirements outlined in the Design Drawings and Technical Specifications. Such proposed changes shall be submitted as part of the Performance Work Statement (PWS) per paragraph 1.7.

B. Surface Preparation
   1. The CONTRACTOR shall prepare the surface receiving FRP per Technical Specification Section 02146, Sewer Pipe and Sewer Structure Cleaning including the following:
      a. The CONTRACTOR shall expose and inspect the pipe and manholes to be rehabilitated with the FRP system. Inspection shall verify the existing conditions of the concrete.
      b. All proposed repairs and restoration technique submittals shall be approved prior to surface preparation.

c. The CONTRACTOR shall examine the existing conditions to identify potential obstructions and constraints, shall verify dimensions, geometry, and access locations.
d. An adhesive bond with adequate strength shall be provided between the first layer of the FRP system and substrate. Surface preparation shall also promote continuous intimate contact between the FRP system and substrate by providing a clean, and smooth surface.

C. Surface Grinding/Blasting: All irregularities, unevenness, and sharp protrusions in the surface profile shall be mechanically ground away to a smooth surface with CSP 3/CSP 2 surface profile for substrate. Disk grinders or other similar devices shall be used to remove previously applied coatings, stain, paint, or any other surface substance that may affect the bond. Voids or depressions with diameters larger than 1 ½ in. or depths greater than 1/8 in., when measured from a 12-in. straight edge placed on the surface, shall be filled according to Section 3.2.E.

D. Crack Injection: In case of host pipe having deep cracks and fractures to an extent that it imposes a risk of failure of the substrate during FRP application, these cracks and fractures shall be filled, and the host pipe shall be pre-strengthened by crack injection. Where crack injection is necessary, internal, or external cracks at a width specified by the ENGINEER shall be filled using pressure injection of epoxy. The FRP system shall be installed no earlier than 12 hours after crack injection. Any surface roughness caused by injection shall be removed as per Section 3.2.C.

E. Surface Profiling: After surface grinding, if necessary, any remaining unevenness in the surface greater than that specified in Section 3.2.C, fins, protrusions, voids, bug holes, depressions, eroded or uneven surfaces shall be filled and smoothened over by using putty made of epoxy resin mortar or polymer cement mortar.

F. Surface Cleaning: Substrate concrete and finished surface of concrete shall be cleaned prior to application of the FRP system. Cleaning shall remove any dust, laitance, grease, oil, curing compounds, wax, stains, coatings (as necessary), surface lubricants, foreign particles, weathered or deteriorated concrete layers, or any other bond-inhibiting material. If power wash is used, the surface shall be allowed to dry thoroughly before installing the FRP system. If grit blast media is used, the surface shall be cleaned of expended media and all loose materials before installing the FRP system. The clean surface shall be protected against redeposition of any bond-inhibiting materials.

G. Installation
1. This section specifies general installation procedures for the wet lay-up of the FRP system composed of FRP laminae. The CONTRACTOR shall submit a site-specific installation procedure in the PWS, which shall, at the minimum, include the following measures.
   a. Environmental Conditions: Environmental conditions for installation shall be examined before and during installation of the FRP system to ensure conformity to

the Contract Documents and FRP Material Supplier's recommendations. Primers, putty, saturating resins, or adhesives shall not be applied on cold, frozen, damp, or wet surfaces, unless the resin is moisture tolerant. Ambient, concrete, and steel surface temperatures shall be within 45-95 °F (7-35 °C). Moisture level on all contact surfaces shall be less than 10 percent at the time of installation of the FRP system, as evaluated according to ACI 503R-93. Moisture restrictions may be waived for resins that have been formulated for wet applications. Work areas identified as confined space require an entry permit in accordance with OSHA regulations. The CONTRACTOR is responsible for the training of all personnel, air testing, safety equipment and complying with the requirements of OSHA. A detailed Safety Plan shall be submitted by the CONTRACTOR as part of the Technical Specification Section 01330, Submittals.

b. Moisture Vapor Transmission: Application of bonded FRP systems shall not proceed if any moisture vapor transmission is present. Concrete dryness is necessary when using elevated temperature cure. Any bubble that develops from moisture vapor transmission can effectively be injected with the same adhesive material used for the FRP system following the procedure specified in Section 3.2.D.

c. Applications in Inclement Weather: When inclement weather does not allow installation of the FRP system, as specified in Section 3.2.G.1.a, auxiliary measures may be employed to correct the conditions. An auxiliary heat source may be used in cold weather to raise the ambient and concrete surface temperatures to acceptable levels during product application and cure duration, as recommended by the FRP material supplier, but not higher than the glass transition temperature ($T_{g)}$ of the primer or saturating resin. Pressurized air, with an effective oil separator, may be used to dry the surface dampness.

d. Equipment: The CONTRACTOR shall provide all necessary equipment in sufficient quantities and clean operating conditions for continuous uninterrupted FRP system installation.

e. Mixing of Resin Components: All resin components, including the main agent and hardener, shall be mixed at the proper temperature using the appropriate weight ratio and for a duration specified by the FRP material supplier until thorough mixing with uniform color and consistency is achieved. The resins shall not be diluted with any organic solvents such as a thinner. Electrically powered mixing blades can be used for mixing. Resin shall be mixed in quantities sufficiently small to ensure that it can be used within its pot life. Any mixed resin that exceeds its pot life or begins to generate heat or shows signs of increased viscosity shall not be used and shall be disposed of according to the SDS. The mixing of some resins may be accompanied by noxious fumes. Precautions must be taken regarding the resin's impact on the environment, including emission of volatile organic compounds. If flammable resins are used, explosion proof electrical motors or air driven motors shall be used for mixing and installation of the materials.

f. Primer and Putty: When necessary, apply one (1) or two (2) coats of primer on the substrate surface to penetrate its open pores. Putty, if used, shall be applied as soon

as the primer becomes tack free or is not sticky to the fingers. Putty shall be applied within seven (7) days after primer application; otherwise, the primer- coated surface shall be roughened with sandpaper or a similar tool. The resulting surface shall be cleaned according to Section 3.2.F before applying the putty. Apply a minimum of 40-mil (1 mm) thick coat of putty in one (1) layer, and smooth over the surface to fill in any small voids, cracks, or uneven areas. Any swelling on the surface after applying the putty shall be corrected to meet surface profile as specified in Section 3.2.E. The surfaces of primer and putty shall be protected from dust, moisture, and any other contaminants before applying the FRP system.

g. Saturant: Saturant is the term for the engineered resin used to impregnate FRP fabrics and turn them into laminae upon cure. The saturant used in a FRP system shall have sufficiently low viscosity to ensure full impregnation of the fiber sheets prior to curing. To maintain proper viscosity of the saturant, the ambient and substrate surface temperatures must be within the range specified in Section 3.2.G.1.a. Any mixed saturant that exceeds its pot life shall be disposed of according to Section 3.5.

h. Applying Fiber Sheet and Saturant: The fabric shall be uniformly saturated with the saturant using the saturating machine or hand saturated, where site conditions are not favorable for using the machine. The fabric shall be cut to the length specified in the Contract Documents and shall be installed in place and gently pressed onto the wet putty. Any entrapped air between the fiber sheet and the surface shall be released or rolled along the sheet in the direction parallel to the fibers while allowing the resin to impregnate the fibers and achieve intimate contact with the substrate. Rolling perpendicular to the fiber direction is not permitted. In bi- directional fabrics, rolling shall be initially in the fill (transverse) direction end to end and then in the warp (longitudinal) direction.

i. Multiple-Fiber Plies: Subsequent layers of fabric (if called for in the design), shall be properly saturated with saturant and applied on top of the first sheet of fabric with no interruption. The amount of resin overcoat for intermediate plies shall factor in overcoat for the applied ply and undercoat for the next ply. Follow the PWS and approved shop and Design Drawings for the fiber orientation and ply stacking sequence. Each ply and core fabric shall be applied before the onset of complete gelation of the previous layer. The number of plies that can be applied in a single day shall be based on the FRP material supplier's recommendation When previous layers are cured, interlayer surface preparation, such as light sanding and filling with putty, may be required, as specified in Section 3.2.G.1.f.

j. Overlapping: Lap joints shall be constructed over a minimum of one (1) CFRP or GFRP laminate. The lap joint layer shall not be the top laminate. The length of the lap splice shall be as specified by the Contract Documents but must be a minimum of 6-inches (152 mm) long. Staggering of lap splices on multiple plies and adjacent strips shall be required unless permitted by Contract Documents.

k. Alignment of FRP Materials: The fiber plies shall be aligned on the host pipe according to the Contract Documents. Any deviation in the alignment more than 5 degrees (approximately 1 in./ft) is not acceptable and shall be grounds for rejection. Once installed, the fibers shall be free of kinks, folds, and waviness.

l. Termination Points: The termination points of the FRP system shall be installed such that water is not allowed to seep in between the surface and the FRP system. The FRP system shall be sealed properly at the termination points by applying epoxy sealant. In locations where flow velocities are high or in pressurized conduits, elastomeric internal joint seals with compressed steel bands shall be used at the termination points, with the appropriate approved details included in the Design Drawings.

m. Curing: The FRP system shall be allowed to cure for the minimum amount of time specified per the FRP material supplier's requirements. Field modification of resin chemistry for rapid curing shall not be allowed. An elevated cure temperature may be used if rapid curing is necessary. The cure of installed plies shall be monitored before placing subsequent plies. In case of any curing irregularity, installation of subsequent plies shall be halted. Protect the FRP system while curing.

n. Protective Coating and Finishing: It is permissible to use a protective coating for abrasion resistance and improved flow conditions. The protective coating shall be either thickened epoxy, with or without a pigment added to facilitate inspection, or another resin as agreed between the OWNER or ENGINEER and CONTRACTOR. The protective coating shall be compatible with exposure conditions including corrosive gases, moisture, abrasive chemicals in sewage, salt water, and physical abrasion due to debris and silt in sewers. Applicability of the topcoat to the FRP system in abrasive environments shall be verified by testing (ASTM D4060).

o. Protective Coating Field Application: Surface preparation shall be as recommended by the FRP material supplier. Solvent wipes shall not be used to clean the FRP surface unless approved by the FRP material supplier. If abrasive cleaning is necessary, air pressure shall be limited to avoid any damage to fibers. Ambient and surface temperatures shall be within the range specified in Section 3.2.G.1.a, prior to applying the protective coating.

3.3 INSPECTION & QUALITY ASSURANCE

A. The CONTRACTOR shall coordinate with and accommodate the needs of the OWNER or ENGINEER Quality Assurance inspector. The CONTRACTOR shall provide a specific quality assurance (QA) plan for the tests identified. The CONTRACTOR shall provide its own onsite inspector for Quality Control (QC).

B. The project specific QA/QC plan shall be included in the PWS submittal that includes:

1. Inspection of Materials: The FRP material supplier's certifications for all delivered and stored FRP components shall be inspected for conformity to the Contract Documents before starting the project. Materials testing shall be conducted on samples as detailed in the PWS. Any material that does not meet the requirements of the Contract Documents or PWS will be rejected. Additional inspection measures may be taken during the installation process at the discretion of the OWNER or ENGINEER.
2. Daily Inspection: Daily inspection shall include date and time of repair; relative humidity; general weather conditions; surface dryness per ACI 503.4-92; surface

preparation and surface profile using ICRI surface profile chips; qualitative description of surface cleanliness; type of auxiliary heat source, if any; widths of cracks not injected with epoxy; fiber or procured laminate batch numbers and their locations in the structure; batch numbers, mixture ratios, mixing times, and qualitative descriptions of the appearance of all mixed resins, primers, putties, saturants, adhesives, and coatings; observations of the progress of the cure of resins; conformance with installation procedures; adhesion test results of bond strength, failure mode, and location; FRP properties from tests of field sample panels or witness panels, if required; location and size of any delamination's or air voids; lot number, manufacturer and expiration date of applied materials, and the general progress of work.

3. Inspection for Fiber Orientation: Fiber or ply orientation, fiber kinks, and waviness shall be examined by visual inspection for conformity to the Contract Documents. Tolerances will follow Sections 3.2 and 3.3. Any nonconforming FRP repair area shall be removed and repaired as per Section 3.4 – Repair of Defective Work.
4. Inspection for Debonding: After at least 24 hours from initial installation of the resin, a visual inspection of the surface shall be performed for any swelling, bubbles, voids, or delamination. If an air pocket is suspected, an acoustic tap test shall be carried out with a hard object to identify delaminated areas by sound, with at least one strike per one (1) foot^2. Delamination defects smaller than 0.5-inch in diameter shall require no corrective action, unless as specified in Section 3.4.A. Delamination defects larger than 0.5-inch but smaller than 2-inch in diameter will be repaired as per Section 3.4.B. Delamination defects larger than 2-inch but smaller than 6- inch in diameter, and with a frequency of less than five (5) per 10 foot^2 of surface area, shall be repaired as per Section 3.4.C. Larger delamination defects shall be repaired as per Section 3.4.D.
5. Inspection for Cure of Resin: If specified in the Contract Documents, the relative cure of resin in FRP systems shall be examined by visual inspection or by third party laboratory testing of resin-cup samples using ASTM D3418. Follow recommendations of the resin FRP material supplier for acceptance criteria. If the cure of resin is found unacceptable, the entire area shall be marked and repaired as per Section 3.4.
6. Tests: Specimens from the installed FRP system or samples representative thereof, shall be tested at the request of the OWNER or ENGINEER, for tensile, compressive, and adhesive strengths. A minimum of 2 witness panels per day shall be obtained on the days the FRP system is installed at the project site.
7. Adhesion test: Refer to ASTM D7234 for adhesion to concrete. To validate the adequacy of the surface preparation and the adhesion strength of the FRP system, the CONTRACTOR shall perform random adhesion tests on the prepared concrete substrate of pipe segments adjacent to repair pipes as directed by the ENGINEER and witnessed by the ENGINEER. The ENGINEER should designate the areas for trial adhesion tests prior to the surface preparation activities. These areas shall be cleaned, prepared, and covered with two-ply FRP system test patches with minimum dimensions of 1-foot x 1-foot for adhesion test to concrete substrate. The patch shall consist of two orthogonal plies of FRP laminae. One (1) adhesion test shall be performed on each test patch. The remaining adhesion test patches shall be finish coated and remain in place

for future testing purposes as needed. The CONTRACTOR shall log the location of the adhesion test and report the test results to the OWNER or ENGINEER.

8. Tensile strength test (ASTMD3039): Depending on the composition of the FRP system used for a particular application, test panels shall be field fabricated using two (2) FRP system layers of glass fiber fabric, any core (3D) fabric, resins and saturation equipment used in the application. Tensile test panels shall be approximately 12-inch by 12-inch. The test panel shall be prepared on a smooth flat surface overlaid with plastic (polyethylene or vinyl) sheeting. Saturating resin shall be used to prime the surface, followed by the saturated system, and finally topped with more saturating resin. A cover of plastic sheeting shall be placed over the panel and the panel squeegeed to remove any bubbles and other surface irregularities to ensure a smooth flat surface. The panel shall be labeled with time, date, and sample panel number, fabric lot numbers, and resin batch numbers, and stored in an environment representative of the surface being repaired condition to cure until collected for lab testing.
    a. The test lab shall perform a minimum of five (5) tensile tests with the fibers oriented in the strong direction for each tensile test panel in accordance with ASTM D3039, and report certified tests results for tensile strength, tensile modulus, related specimen dimensions, and percent elongation. For projects where multiple test panels with the same fabric batch are prepared, it is permissible to perform three (3) tension tests per panel instead of five (5) tests per panel, subject to review and approval by the ENGINEER.
    b. The FRP system will be unacceptable if the average tensile strength per unit width is below that specified in the Contract Documents.
9. Holiday “Spark” Testing: The CONTRACTOR shall furnish services of a trained operator in holiday detection devices until final acceptance of the FRP system. Devices shall be tested and operated in the presence of the OWNER or ENGINEER. The CONTRACTOR shall perform holiday testing on all FRP surfaces in the presence of the OWNER or ENGINEER. The CONTRACTOR shall be responsible to repair defective areas and retest the FRP system as necessary at no additional cost to the OWNER.

3.4 REPAIR OF DEFECTS

A. This section specifies the conditions and types of defects that require repair and the acceptable methods of repair. Defects are of different types and may be generally classified as aesthetic, short-term critical, or long-term critical. Repair procedure depends on the type, size, and extent of defects. Repair procedures indicated below are exemplary, and the actual procedure specific to each project shall be submitted as a part of the PWS.

B. Repair of Protective Coating:
    1. Defects in protective coating can be of three (3) types: small hairline cracks, blistering, and peeling. In all cases, the moisture content of the substrate should be below 0.05% before applying a new coating. Prior to any repair of protective coating, the FRP system shall be examined visually or otherwise to ensure that no defect exists within or on the surface.

2. Defects in FRP, if found, shall be repaired as described below. If protective coating appears to show small areas with cracks, the local surface shall be lightly sanded. Then a new coating with the appropriate primer shall be applied according to the FRP material supplier's recommendations. At the minimum, the coating shall be applied over an area extending 1-inch on either side of the defect. If the protective coating shows signs of blistering, the entire area of blisters as well as the surrounding area to a distance of at least 12-inches shall be carefully scraped clean. In no case should a blistered surface be recoated without complete removal of the existing coating. The area shall be wiped clean and dried thoroughly. Once dry, the area can be recoated after application of the primer coat if required by the FRP material supplier. If the surface shows signs of excessive peeling, the entire coating shall be scraped off and the surface lightly sanded, wiped clean, and thoroughly dried before applying a new coat according to the FRP material supplier's recommendations.

C. Epoxy Injection of Small Defects:
1. Small entrapped voids or surface discontinuities no larger than 0.5-inch in diameter shall not be considered defects and require no corrective action unless they occur next to edges or when there are more than five (5) such defects in an area of ten (10) foot^2. Small defects of size between 0.5-inch and 2-inches in diameter shall be repaired using low-pressure epoxy injection if the defect is local and does not extend through the complete thickness of the FRP system.

D. Patching of Minor Damage:
1. Minor defects are those with diameters between 2-inches and 6-inches and a frequency of less than five (5) per unit surface area of 10 foot^2. The area surrounding the defects to an extent of at least 1-inch on all sides shall be carefully removed. The area shall be wiped clean and thoroughly dried. The area shall then be patched by adding an FRP patch extending at least 1-inch on all sides of the removed area.

E. Replacement of Large Defects:
1. Defects larger than 6-inches in diameter shall be carefully marked and scarfed out extending to a minimum of 1-inch on all sides. Scarfing shall be progressing through the layers of the FRP system until past the defective area. The substrate shall be appropriately prepared, and primer reapplied after ensuring that the surface is clean and dry. Application of an FRP patch system shall extend a minimum of 6-inches on all sides of the scarfed area. Once cured, the protective coating shall be applied over the entire area.

3.5 STORAGE, HANDLING, AND DISPOSAL

A. Storage Requirements: All components of the FRP system must be delivered and stored in the original factory-sealed, unopened packaging or in containers with proper labels identifying the FRP material supplier, brand name, system identification number, manufacture date, and expiration date. Catalysts and initiators should be stored separately. All components must be protected from dust, moisture, chemicals, direct sunlight, physical

damage, fire, and temperatures outside the range specified in the system data sheets. Any component that has been stored in a condition different from that stated above must be disposed of, as specified in Section 3.5.G.

B. Shelf Life: All components of the FRP system, especially resins and adhesives, that have been stored longer than the shelf life specified on the system data sheet shall not be used and must be disposed of, as specified in Section 3.5.G.

C. Handling: All components of the FRP system, especially fiber sheets, must be handled with care according to the FRP material supplier recommendations to protect them from damage and to avoid misalignment or breakage of the fibers by pulling, separating, or wrinkling them or by folding the sheets. After cutting, sheets shall be either stacked dry with separators or at a radius no tighter than 12-inches or as recommended by the FRP material supplier.

D. Safety Hazards: All components of the FRP system, especially resins and adhesives, must be handled with care to avoid safety hazards, including but not limited to skin irritation and sensitization, and breathing vapors and dust. Mixing resins shall be monitored to avoid fuming and inflammable vapors, fire hazards, or violent boiling. The CONTRACTOR is responsible for ensuring that all components of the FRP system at all stages of work conform to the local, state, and federal environmental and worker's safety laws and regulations. The CONTRACTOR is advised that a forced ventilator system may be required inside enclosed sections and that provision for ventilation, if any, shall be included in the cost of the work. Refer to the Safety Plan as specified in Section 3.2.G for details.

E. Safety Data Sheets: The SDS for all components of the FRP system shall be accessible to all at the project site. Specific handling hazards and disposal instructions shall be specified in the SDS section entitled Personnel and Workplace Protection. The CONTRACTOR is responsible for providing the proper means of protection for safety of the personnel and the workplace.
   1. The CONTRACTOR shall inform the personnel of the dangers of inhaling fumes of primer, putty, or resin and shall take all necessary precautions against injury to personnel. The resin mixing area shall be well vented to the outside. Refer to the Safety Plan as specified in Section 3.2.G for details.

F. Clean-Up: The CONTRACTOR is responsible for the cleanup of the equipment and the project site from hazardous and aesthetically undesirable FRP components using appropriate solvents, as stated in the safety data sheet.

G. Disposal: Any component of the FRP system that has exceeded its shelf life or pot life or has not been properly stored, and any unused or excess material that is deemed waste shall be disposed of in a manner amiable to the protection of the environment and consistent with the SDS.

3.6 PROJECT CLOSE-OUT AND MAINTENANCE

A. Documentation of the work: The OWNER requires documentation of the work to be prepared and submitted to the OWNER or ENGINEER by the CONTRACTOR on completion of the work according to Technical Specification Section 01330, Submittals. The documentation shall include the following:
   1. Information on the products and installation method used.
   2. Pre- and post-inspection results.
   3. Test results.
   4. Any changes or deviations from the Contract Documents and possible corrective work.

B. Verification/Basis for Rejection: Materials not complying with the requirements of this Technical Specification shall be rejected at the discretion of the OWNER or ENGINEER. Repairs, replacements, and retesting shall be accomplished in accordance with the Contract Documents at no additional cost to the OWNER.

C. Affidavit of Compliance: The OWNER requires an affidavit from the FRP material supplier or CONTRACTOR, as applicable, that the material provided, or the installation performed complies with the applicable requirements of the Technical Specifications provided herein and delivered to the OWNER or ENGINEER according to Technical Specification Section 01330, Submittals.

3.7 PROTECTION OF SITE:

A. Except as otherwise provided herein, the CONTRACTOR shall protect from damage all fences, structures, sidewalks, utilities, trees, shrubbery, lawns, etc., during the progress of this work. All debris and unused materials shall be removed immediately upon completion of the work. The site shall be restored as nearly as possible to its original condition, including the replacement, at the CONTRACTOR's sole expense, of any facility or landscaping which has been destroyed or damaged beyond restoration.

3.8 UTILITIES:

A. The CONTRACTOR shall arrange for and provide any required utilities at the CONTRACTOR’s sole cost and expense. This includes but is not limited to water, power for operating any equipment along with personnel sanitation facilities.

3.9 CLEANING AND PREPARATION

A. The CONTRACTOR shall be responsible for all cleaning and surface preparation. The CONTRACTOR shall notify the ENGINEER of any irregularity, which may interfere with the proper installation.

3.10 ACCEPTANCE

A. As a condition precedent to Final Acceptance of the work, CONTRACTOR shall certify the proper installation and testing of material provided under this section. Certification shall warrant that materials and installation are free of defects and/or workmanship and suitable for trouble-free operation under the conditions set forth in these Technical Specifications.

++ END OF SECTION ++

SECTION 03100

CONCRETE FORMWORK

PART 1 - GENERAL

1.1 DESCRIPTION

A. Scope:
   1. Provide all labor, materials, equipment and incidentals as shown, specified and required to furnish and install concrete formwork. The Work also includes:
      a. Providing openings in formwork to accommodate the Work under this and other Sections and building into the formwork all items such as sleeves, anchor bolts, inserts and all other items to be embedded in concrete for which placement is not specifically provided under other Sections.

B. Coordination:
   1. Review installation procedures under other Sections and coordinate the installation of items that must be installed with the formwork.
   2. Coordinate formwork specifications herein with the requirements for finished surfaces specified in Section 03300, Cast-In-Place Concrete, and Section 03200, Concrete Reinforcement.

1.2 QUALITY ASSURANCE

A. Referenced Standards:
   1. American Concrete Institute (ACI):
      a. CT-13, Concrete Terminology.
      b. 117, Specification for Tolerances for Concrete Construction and Materials.
      c. 347R, Guide to Formwork for Concrete.

B. Qualifications:
   1. Formwork, shoring and reshoring to be designed by a licensed professional engineer currently registered or having a minimum of three years of experience in this type of design work.
      a. Above qualifications apply to the following:
         1) Slabs and beams not cast on the ground
         2) Wall and column placements over 15-feet in height.

C. Miscellaneous:
   1. Design and engineering of formwork, shoring and reshoring as well as its construction is the responsibility of the Contractor.
   2. Design requirements:
      a. Design formwork for loads, lateral pressures and allowable stresses outlined in ACI 347R and for design considerations, wind loads, allowable stresses and other applicable requirements of the controlling local building code.
         1) Where conflicts occur between the above two standards, the more stringent requirements shall govern.
      b. Design formwork to limit maximum deflection of form facing materials reflected in concrete surfaces exposed to view to 1/240 of span between structural members.
   3. For slabs and beams not cast on the ground, develop a procedure and schedule for removal of shores and installation of reshores and for calculating the loads transferred to the structure during this process in accordance with ACI 347R.
      a. Perform structural calculations as required to prove that all portions of the structure in combination with remaining forming and shoring system has sufficient strength to safely support its own weight plus the loads placed thereon. Calculations shall be performed by a licensed professional engineer.
      b. When developing procedure, schedule and structural calculations, consider the following at each stage of construction:
         1) The structural system that exists.
         2) Effects of all loads during construction.
         3) Strength of concrete.
         4) Modulus of Elasticity (Young's Modulus) of the concrete at the time of shoring and form removal.
         5) The influence of deformations of the structure and shoring system on the distribution of dead loads and construction loads.
         6) The strength and spacing of shores or shoring systems used, as well as the method of shoring, bracing, shore removal, and reshoring including the minimum time intervals between the various operations.
         7) Any other loading or condition that affects the safety or serviceability of the structure during construction.

1.3 DEFINITIONS

A. Words and terms used in these Specifications are defined in ACI CT-13.

1.4 SUBMITTALS

A. Shop Drawings:
   1. Comply with the requirements of Section 01332, Shop Drawing Procedures.
   2. Product technical data including:
      a. Manufacturer and type of proposed form ties.
   3. Submit for information purposes the following:
      a. Copies of manufacturer's data and installation instructions for proprietary materials, including form coatings, manufactured form systems, ties and accessories.

PART 2 - PRODUCTS

2.1 MATERIALS

A. Forms for Surfaces Exposed to View:
   1. Wood forms:
      a. 5/8 or ¾-inch 5-ply structural plywood of concrete form grade.
      b. Built-in-place or prefabricated type panel.
   2. Metal forms:
      a. Metal forms may be used except for aluminum in contact with concrete.
      b. Forms to be tight to prevent leakage, free of rust and straight without dents to provide members of uniform thickness.

B. Forms for Surfaces Not Exposed to View:
   1. Wood or metal sufficiently tight to prevent leakage.
   2. Do not use aluminum forms.

2.2 ACCESSORIES

A. Form Ties:
   1. Commercially fabricated for use in form construction.
      a. Field fabricated ties are unacceptable.
   2. Constructed so that ends or end fasteners can be removed without causing spalling at surfaces of the concrete.
   3. Embedded portion of ties to be not less than 1-1/2-inch from face of concrete after ends have been removed.
   4. Cone size:
      a. 3/4 IN minimum diameter cones on both ends.
      b. Depth of cone not to exceed the concrete reinforcing cover.
   5. Provide ties with built-in waterstops in all walls that will be in contact with process liquid during plant operation and below grade soil.

6. Through-wall ties that are designed to be entirely removed may be used for walls that will be in contact with process liquid during plant operation provided:
   a. Tie hole is plugged with:
      1) X-Plug, by Greenstreak, Inc.
      2) Or Equal.
   b. Tie hole plugs are to be installed in strict accordance with the manufacturer's printed installation instructions.
   c. Contractor provides and follows quality control plan for verifying proper installation.

PART 3 - EXECUTION

3.1 PREPARATION

A. Form Surface Treatment:
   1. Before placing of reinforcing steel or concrete, cover surfaces of forms with an approved release material that will effectively prevent absorption of moisture and prevent bond with concrete, will not stain concrete or prevent bonding of future finishes.
      a. A field applied form release agent or sealer of approved type or a factory applied nonabsorptive liner may be used.
   2. Do not allow excess form release material to stand in puddles in forms nor in contact with hardened concrete against which fresh concrete is to be placed.

B. Provide temporary openings at base of column and wall forms and at other points where necessary to facilitate cleaning and observation immediately before concrete is placed, and to limit height of free fall of concrete to prevent aggregate segregation.
   1. Temporary openings to limit height of free fall of concrete shall be spaced no more than 8-feet apart.

C. Clean surfaces of forms, reinforcing steel and other embedded materials of any accumulated mortar or grout from previous concreting and of all other foreign material before concrete is placed.

3.2 ERECTION

A. Install products in accordance with manufacturer's instructions.

B. Tolerances:
   1. Conform to ACI 117.
   2. Variation from plumb:
      a. In lines and surfaces of columns, piers, walls, and in risers.

1) Maximum in any 10-feet of height: ¼-inch.
2) Maximum for entire height: ½-inch.

b. For exposed corner columns, control-joint grooves, and other exposed to view lines:
1) Maximum in any 20-feet length: ¼-inch.
2) Maximum for entire length: ½-inch.

3. Variation from level or from grades specified:
a. In slab soffits, ceilings, beam soffits and in arises, measured before removal of supporting shores.
1) Maximum in any 10-feet of length: ¼-inch.
2) Maximum in any bay or in any 20-feet length: 3/8-inch.
3) Maximum for entire length: 3/4-inch.

b. In exposed lintels, sills, parapets, horizontal grooves, and other exposed to view lines:
1) Maximum in any bay or in 20-feet length: 1/4-inch.
2) Maximum for entire length: 1/2-inch.

4. Variation of linear structure lines from established position in plan and related position of columns, walls, and partitions:
a. Maximum in any bay: 1/2-inch.
b. Maximum in any 20-feet of length: 1/2-inch.
c. Maximum for entire length: 1-inch.

5. Variation in sizes and location of sleeves, floor openings, and wall openings:
a. Maximum of +1/2-inch.

6. Variation in horizontal plan location of beam, column and wall centerlines from required location: Maximum of +1/2-inch.

7. Variation in cross sectional dimensions of columns and beams and in thickness of slabs and walls: Maximum of -1/4-inch, +1/2-inch.

8. Footings and foundations:
a. Variations in concrete dimensions in plan: -1/2-inch, +2-inch.
b. Misplacement or eccentricity:
1) 2-percent of footing width in direction of misplacement but not more than 2-inch.

c. Thickness:
1) Decrease in specified thickness: 5-percent.
2) Increase in specified thickness: No limit except that which may interfere with other construction.

9. Variation in steps:
a. In a flight of stairs:
1) Rise: +1/-inch.
2) Tread: +1/4-inch.

b. In consecutive steps:
1) Rise: +1/16-inch.
2) Tread: +1/8-inch.

10. Establish and maintain in an undisturbed condition and until final completion and acceptance of Project, sufficient control points and bench marks to be used for reference purposes to check tolerances.
11. Regardless of tolerances listed allow no portion of structure to extend beyond legal boundary of Project.
12. To maintain specified tolerances, camber formwork to compensate for anticipated deflections in formwork prior to hardening of concrete.

C. Make forms sufficiently tight to prevent loss of mortar from concrete.

D. Place 3/4-inch chamfer strips in exposed to view corners of forms to produce 3/4-inch wide beveled edges.

E. At construction joints, overlap contact surface of form sheathing for flush surfaces exposed to view over hardened concrete in previous placement by at least 1-inch.
   1. Hold forms against hardened concrete to prevent offsets or loss of mortar at construction joint and to maintain a true surface.
   2. Where possible, locate juncture of built-in-place wood or metal forms at architectural lines, control joints or at construction joints.

F. Where circular walls are to be formed and forms made up of straight sections are proposed for use, provide straight lengths not exceeding 2-feet wide.
   1. Brace and tie formwork to maintain correct position and shape of members.

G. Construct wood forms for wall openings to facilitate loosening, if necessary, to counteract swelling.

H. Anchor formwork to shores or other supporting surfaces or members so that movement of any part of formwork system is prevented during concrete placement.

I. Provide runways for moving equipment with struts or legs, supported directly on formwork or structural member without resting on reinforcing steel.

J. Provide positive means of adjustment (wedges or jacks) of shores and struts and take up all settlement during concrete placing operation.
   1. Securely brace forms against lateral deflection.
   2. Fasten wedges used for final adjustment of forms prior to concrete placement in position after final check.

3.3 REMOVAL OF FORMS

A. No construction loads shall be supported on, nor any shoring removed from, any part of the structure under construction except when that portion of the structure

in combination with remaining forming and shoring system has sufficient strength to safely support its weight and loads places thereon.

B. When required for concrete curing in hot weather, required for repair of surface defects or when finishing is required at an early age, remove forms as soon as concrete has hardened sufficiently to resist damage from removal operations or lack of support.

C. Remove top forms on sloping surfaces of concrete as soon as concrete has attained sufficient stiffness to prevent sagging.
   1. Perform any needed repairs or treatment required on such sloping surfaces at once, followed by curing specified in Specification Section 03300, Cast-In-Place Concrete.

D. Loosen wood forms for wall openings as soon as this can be accomplished without damage to concrete.

E. Formwork for columns, walls, sides of beams, and other parts not supporting weight of concrete may be removed as soon as concrete has hardened sufficiently to resist damage from removal.
   a. For walls of water containing structures, leave forms in place for a minimum of 48-hours.

F. Where no reshoring is planned, leave forms and shoring used to support weight of concrete in place until concrete has attained its specified 28-day compressive strength and the concrete Modulus of Elasticity has reached a value of (57,000 times the square root of f'c) unless otherwise approved in writing by the ENGINEER.
   1. Where a reshoring procedure is planned, supporting formwork may be removed when concrete has reached the concrete strength required by the formwork designer's structural calculations.

G. When shores and other vertical supports are so arranged that non-load-carrying form facing material may be removed without loosening or disturbing shores and supports, facing material may be removed when concrete has sufficiently hardened to resist damage from removal.

3.4 RESHORING

A. No construction loads shall be supported on, nor any shoring removed from, any part of the structure under construction except when that portion of the structure in combination with remaining forming and shoring system has sufficient strength to safely support its weight and loads placed thereon.

B. While reshoring is underway, no superimposed dead or live loads shall be permitted on the new construction.

C. During reshoring do not subject concrete in structural members to combined dead and construction loads in excess of loads that structural members can adequately support.

D. Place reshores as soon as practicable after stripping operations are complete but in no case later than end of working day on which stripping occurs.

E. Tighten reshores to carry their required loads without overstressing.

F. Shoring, reshoring and supporting formwork may be removed when concrete has reached the concrete strength required by the formwork designer's structural calculations.

G. For floors supporting shores under newly placed concrete leave original supporting shores in place or reshore.
   1. Reshoring system shall have a capacity sufficient to resist anticipated loads.
   2. Locate reshores directly under a shore position above.

H. In multi-story buildings, extend reshoring over a sufficient number of stories to distribute weight of newly placed concrete, forms, and construction live loads in such a manner that design superimposed loads of floors supporting shores are not exceeded.

3.5 FIELD QUALITY CONTROL

A. Special Inspection:
   1. See Specification Section 01416, Special Inspections.
   2. Special Inspection is required for:
      a. Shape, location, and dimensions.
         1) Inspect in accordance with dimensions and details on Drawings
         2) Frequency: Inspect periodically, prior to each concrete pour.

++ END OF SECTION ++

SECTION 03200

CONCRETE REINFORCEMENT

PART 1 - GENERAL

1.1 DESCRIPTION

A. Scope:
1. Provide all labor, materials, equipment and incidentals as shown, specified and required to furnish and install concrete reinforcement.
2. The extent of concrete reinforcement is shown.
3. The Work includes fabrication and placement of reinforcement including bars, ties and supports, and welded wire fabric for concrete, encasements and fireproofing.

1.2 QUALITY ASSURANCE

A. Reference Standards: Comply with applicable provisions and recommendations of the following, except as otherwise shown or specified:
1. ASTM A82, Specification for Steel Wire, Plain, for Concrete Reinforcement.
2. ASTM A184, Specification for Fabricated Deformed Steel Bar Mats for Concrete Reinforcement.
3. ASTM A185, Specification for Steel Welded Wire Fabric, Plain, for Concrete Reinforcement.
4. ASTM A496, Specification for Steel Wire, Deformed, for Concrete Reinforcement.
5. ASTM A497, Specification for Steel Welded Wire Fabric, Deformed, for Concrete Reinforcement.
6. ASTM A615, Specification for Deformed and Plain Billet-Steel Bars for Concrete Reinforcement.
7. ASTM A706, Specification for Low-Alloy Steel Deformed Bars for Concrete Reinforcement.
8. ASTM A775, Specification for Epoxy-Coated Reinforcing Steel Bars.
9. ASTM A1022, Standard Specification for Deformed and Plain Stainless Steel Wire and Welded Wire for Concrete Reinforcement.
10. ASTM A1064, Standard Specification for Steel Wire and Welded Wire Reinforcement, Plain and Deformed, for Concrete.
11. ACI 315, Manual of Standard Practice for Detailing Reinforced Concrete Structures.
12. ACI 318, Building Code Requirements for Structural Concrete.
13. ACI 350, Code Requirements for Environmental Engineering Concrete Structures.

14. ACI SP66, Detailing Manual.
15. ANSI/AWS D1.4, Structural Welding Code - Reinforcing Steel.
16. CRSI 1MSP, Concrete Reinforcing Steel Institute (CRSI) Manual of Standard Practice.

B. Allowable Placing Tolerances: Comply with ACI 350, Chapter 7 - Details of Reinforcement except as specified below and as shown per the Contract Drawings:
   1. Concrete surfaces which are in contact with liquids: 2-inches minimum coverage.

1.3 SUBMITTALS

A. Shop Drawings: Submit for approval the following:
   1. Comply with the requirements of Section 01332, Shop Drawing Procedures.
   2. Manufacturer's specifications and installation instructions for all materials and reinforcement accessories.
   3. Drawings for fabrication, bending, and placement of concrete reinforcement. Comply with ACI 315, Parts A and B. For walls, show elevations to a minimum scale of 1/4-inch to one foot. For slabs, show top and bottom reinforcing on separate plan views. Show bar schedules, stirrup spacing, diagrams of bent bars, arrangements and assemblies, as required for the fabrication and placement of concrete reinforcement unless otherwise noted. Splices shall be kept to a minimum. Splices in regions of maximum tension stresses shall be avoided whenever possible.
   4. Shop Drawings shall be in sufficient detail to permit installation of reinforcing without reference to Contract Drawings.
      a. Shop Drawings shall not be prepared by reproducing the plans and details indicated on the Contract Drawings but shall consist of completely redrawn plans and details as necessary to indicate complete fabrication and installation of all reinforcing steel.
      b. Where multiple types of supports for reinforcing steel (such as chairs, runners, bolsters, and other types of supports) will be used in the Work, clearly indicate on the Shop Drawings the support types and materials of supports.
   5. Drawings detailing the location of all construction and expansion joints as required under Section 03251, Concrete Joints, shall be submitted and approved before Shop Drawings for reinforcing steel are submitted.
   6. Description of reinforcing weld locations and weld procedures.
   7. A copy of this specification section, with addendum updates included, and all referenced and applicable sections, with addendum updates included, with each paragraph check-marked to indicate specification compliance or marked to indicate requested deviations from specification requirements. Check marks (✓) shall denote full compliance with a paragraph as a whole. If deviations from the specifications are indicated, and therefore requested by the CONTRACTOR,

each deviation shall be underlined and denoted by a number in the margin to the right of the identified paragraph, referenced to a detailed written explanation of the reasons for requesting the deviation. The ENGINEER shall be the final authority for determining acceptability of requested deviations. The CONTRACTOR shall furnish equipment and/or services as specified if an exception and/or deviation is rejected. The remaining portions of the paragraph not underlined will signify compliance on the part of the CONTRACTOR with the specifications. Failure to include a copy of the marked-up specification sections, along with justification(s) for any requested deviations to the specification requirements, with the submittal shall be sufficient cause for rejection of the entire submittal with no further consideration.

B. Certificates:
   1. Submit one copy of steel producer's certificates of mill analysis, tensile and bend tests for reinforcing steel.
   2. Submit certification of welders and weld procedures for splices in accordance with ANSI/AWS D1.4 requirements.

1.4 DELIVERY, HANDLING AND STORAGE

A. Deliver concrete reinforcement materials to the site bundled, tagged and marked. Use metal tags indicating bar size, lengths, and other information corresponding to markings shown on placement diagrams.

B. Store concrete reinforcement material at the site to prevent damage and accumulation of dirt or excessive rust. Store on heavy wood blocking so that no part of it will come in contact with the ground.

PART 2 - PRODUCTS

2.1 MATERIALS

A. Reinforcing Bars: ASTM A 615, and as follows:
   1. Provide Grade 60, deformed, for all bars, unless indicated otherwise.

B. Reinforcing Bars to be Welded: ASTM A706, Grade 60, deformed.

C. Mechanical Couplers: Reinforcement bars may be spliced with a mechanical connection. This connection shall be a full mechanical connection which shall develop in tension or compression, as required, at least 125 percent of specified yield strength (fy) of the bar being spliced in accordance with ACI 318.
   1. Acceptable Manufacturers:
      a. Lenton Rebar Splicing by Erico, Inc.

b. Richmond dowel bar splicer system by Richmond Screw and Anchor Co., Inc.
c. Bar-Grip Systems by Barsplice Products, Inc.

D. Steel Wire: ASTM A 82.

E. Welded Wire Reinforcement: ASTM A1064 or ASTM A1022 where noted on Drawings.
1. Furnish in flat sheets, not rolls.

F. Supports for Reinforcement: Bolsters, chairs, spacers and other devices for spacing, supporting and fastening reinforcement in place.
1. Use wire bar type supports complying with CRSI "Manual of Standard Practice" recommendations, except as specified below. Do not use wood, brick, or other unacceptable materials.
2. For slabs on grade, use precast concrete blocks, 4-inch square in plan, with embedded tie wire as specified by CRSI, "Manual of Standard Practice". The precast concrete blocks shall have the same or higher compressive strength as specified for the concrete in which they are located.
3. For all concrete surfaces, where legs of supports are in contact with forms, provide supports complying with CRSI "Manual of Standard Practice" as follows:
a. At formed surfaces in contact with soil, weather, or liquid or located above liquid, supports shall be CRSI Class 1 for maximum protection. The plastic coating on the legs shall extend at least 1/2-inch upward from the form surface.
b. At interior dry surfaces (not located above liquid), supports shall be either Class 1 or Class 2 for moderate protection.
c. At formed surfaces with an architectural finish, use stainless steel protected legs (Type B).
4. Over waterproof membranes, use precast concrete chairs.

G. Drilled Dowels
1. Drilled dowels shall consist of reinforcing bars anchored with an adhesive system into hardened concrete or grout filled masonry. The adhesive system shall use a two-component adhesive mix and shall be injected with a static mixing nozzle following manufacturer's written instructions. The embedment depth of the reinforcing bar shall provide minimum allowable bond strength no less than the allowable tensile capacity of the reinforcing bar, unless shown otherwise on the Drawings.
2. Drilled dowel anchoring systems shall have ultimate capacity no less than 125 percent of the yield strength of the reinforcing steel at an embedment of 12 bar diameters.
3. Product and Manufacturer: Provide one of the following:

a. HIT-RE 500-V3 Epoxy Adhesive Anchor System, by Hilti Inc.
b. SET-3G Structural Epoxy-Tie Anchor System by Simpson Strong-Tie.
c. Or equal.

2.2 FABRICATION

A. General: Fabricate reinforcing bars to conform to required shapes and dimensions, with fabrication tolerances complying with CRSI, "Manual of Standard Practice". In case of fabricating errors, do not re-bend or straighten reinforcement in a manner that will injure or weaken the material.

B. Unacceptable Materials: Reinforcement with any of the following defects will not be permitted in the Work:
   1. Bar lengths, bends, and other dimensions exceeding specified fabrication tolerances.
   2. Bends or kinks not shown on approved Shop Drawings.
   3. Bars with reduced cross-section due to excessive rusting or other cause.

C. Ship reinforcing to jobsite with attached plastic or metal tags.
   1. Place on each tag the mark number of the reinforcing corresponding to the mark number indicated on the Shop Drawing.
   2. Mark numbers on tags to be so placed that the numbers cannot be removed.

PART 3 - EXECUTION

3.1 INSPECTION

A. Examine the substrate and the conditions under which concrete reinforcement is to be placed, and notify ENGINEER, in writing, of unsatisfactory conditions. Do not proceed with the Work until unsatisfactory conditions have been corrected in a manner acceptable to ENGINEER.

3.2 INSTALLATION

A. Comply with the applicable recommendations of specified codes and standards, and CRSI, "Manual of Standard Practice", for details and methods of reinforcement placement and supports.

B. Clean reinforcement to remove loose rust and mill scale, earth, ice, and other materials which reduce or destroy bond with concrete.

C. Position, support, and secure reinforcement against displacement during formwork construction or concrete placement operations. Locate and support reinforcing by metal chairs, runners, bolsters, spacers and hangers, as required.

1. Place reinforcement to obtain the minimum concrete coverages as shown and as specified in ACI 350. Arrange, space, and securely tie bars and bar supports together with 16 gage wire to hold reinforcement accurately in position during concrete placement operations. Set wire ties so that twisted ends are directed away from exposed concrete surfaces.
2. Prior to placement of concrete, demonstrate to ENGINEER that the specified cover of reinforcement has been attained, by using a surveying level or string line.
3. Reinforcing steel shall not be secured to forms with wire, nails or other ferrous metal. Metal supports subject to corrosion shall not touch formed or exposed concrete surfaces.

D. Install welded wire fabric in as long lengths as practical. Lap adjoining pieces at least one full mesh and lace splices with 16-gage wire. Do not make end laps midway between supporting beams, or directly over beams of continuous structures. Offset end laps in adjacent widths to prevent continuous laps.

E. Provide sufficient numbers of supports of strength required to carry reinforcement. Do not place reinforcing bars more than 2-inches beyond the last leg of any continuous bar support. Do not use supports as bases for runways for concrete conveying equipment and similar construction loads.

F. Lap Splices:
1. Provide standard reinforcement splices by lapping ends, placing bars in contact, and tying tightly with wire. Comply with requirements shown for minimum lap of spliced bars, shall be as shown on the Drawings

G. Mechanical Couplers:
1. Mechanical butt splices shall be in accordance with the recommendation of the manufacturer of the mechanical splicing device. Butt splices shall develop 125 percent of the specified minimum yield tensile strength of the spliced bars or of the smaller bar in transition splices. Bars shall be flame dried before butt splicing. Adequate jigs and clamps or other devices shall be provided to support, align, and hold the longitudinal centerline of the bars to be butt spliced in a straight line.

H. Welded Splices
1. When permitted by the ENGINEER, in writing, all welding of reinforcing bars shall conform to ANSI/AWS D1.4. Preheating and rate of cooling requirements shall be based on bar steel chemistry and ANSI/AWS D1.4 requirements. Welded splices shall be sized and constructed to transfer a minimum of 125 percent of the specified minimum yield tensile strength of the spliced bars or of the smaller bar in transition splices. Unless otherwise permitted by the

ENGINEER, welding of crossing bars (tack welding) for assembly of reinforcement is prohibited.

2. Welding of wire to wire, and of wire or welded wire fabric to reinforcing bars or structural steels, shall conform to applicable provisions of ANSI/AWS D1.4 and any supplementary requirements by the ENGINEER for the particular application.
3. After completion of welding on coated reinforcing bars, coating damage shall be repaired as specified herein. All welds and all steel splice members when used to splice bars shall be coated with the same material used for repair of coating damage.

I. Drilled Dowels
1. Drilled dowels shall be reinforcing dowels set in a resin adhesive in a hole drilled into hardened concrete.
2. Holes shall be drilled to the adhesive anchor system manufacturer's recommended diameter and depth to develop the required pullout resistance but shall not be greater in diameter than 1/4-inch more than the nominal bar diameter nor less than 12 times the nominal bar diameter in depth.
3. The hole shall be drilled by methods which do not interfere with the proper bonding of the resin. Only masonry type drill bits shall be used.
4. Existing reinforcing steel in the vicinity of proposed holes shall be located prior to drilling. The location of holes to be drilled shall be adjusted to avoid drilling through or nicking any existing reinforcing bars only after approval by the ENGINEER.
5. The hole shall be brushed (non-metallic bristle brush only) and blown clean with clean, dry compressed air to remove all dust and loose particles.
6. Resin shall be injected into the hole through the injection system-mixing nozzle (and any necessary extension tubes) placed to the bottom of the hole. The discharge end shall be withdrawn as resin is placed but kept immersed to prevent formation of air pockets. The hole shall be filled to a depth that ensures that excess material is expelled from the hole during dowel placement.
7. Dowels shall be twisted during insertion into the partially filled hole so as to guarantee full wetting of the bar surface with resin. The bar shall be inserted slowly enough to avoid developing air pockets.

3.3 INSPECTION OF REINFORCEMENT

A. Reinforcement Congestion and Interferences:
1. Notify ENGINEER whenever the specified clearances between bars cannot be met.
2. Do not place any concrete until the ENGINEER submits a solution to reinforcing congestion problem.
3. Reinforcing may be moved as necessary to avoid interference with other reinforcing steel, conduits, or embedded items.

4. If bars are moved more than one bar diameter, obtain ENGINEER'S approval of resulting arrangement of reinforcing.
5. No cutting of reinforcing shall be done without written approval of ENGINEER.

B. Concrete shall not be placed until the reinforcing steel is inspected and permission for placing concrete is granted by ENGINEER. All concrete placed in violation of this provision will be rejected.

C. Formwork for walls and other vertical members will not be closed up until the reinforcing steel is inspected and permission for placing concrete is granted by ENGINEER. All concrete placed in violation of this provision will be rejected.

D. Testing of Drilled Dowels:
1. Employ the services of an independent testing laboratory to perform field quality testing of installed drilled dowels. A minimum of 10 percent (but no less than 15 dowels) shall be chosen at random by the testing laboratory and confirmed by the ENGINEER. Unless otherwise directed by the ENGINEER, drilled dowels shall be tensioned to twice the manufacturer's rated capacity of the anchor. Where dowels are located less than eight dowel diameters from the edge of concrete the ENGINEER will determine the tensile load required for the test.
2. Provide access for the testing agency to places where Work is being produced so that required inspection and testing can be accomplished.
3. CONTRACTOR shall be responsible for the failure of any drilled dowel. If any dowel fails, the testing shall be increased to 100 percent.
4. Correct improper workmanship, remove and replace, or correct as directed by the ENGINEER, all drilled dowels found unacceptable or deficient, at no additional cost to the OWNER.
5. Pay for all corrections and subsequent tests required to confirm the integrity of the drilled dowels.
6. The independent testing and inspection agency shall complete a report for each area. The report shall summarize the observations made by the Inspector and be submitted to the ENGINEER.

E. Inspection of Welded Splices: Employ a testing agency to perform field quality control testing of the welded splices. All welded splices shall be visually inspected. A minimum of five percent of butt splice welds shall be radiographically tested. Any weld which is deficient in any way shall be repaired to be completely sound at the CONTRACTOR'S expense.

F. Special Inspection:
1. See Section 01416.
2. Special Inspection is required for:
   a. Reinforcing size, spacing, lap length and concrete cover.
      1) Inspect in accordance with Drawings and Specification.

2) Frequency: Inspect prior to each concrete pour.

b. Drilled dowel adhesive anchoring system:.
   1) Inspect in accordance with ICC-ES report.
   2) Frequency:
      a) Inspect all adhesive anchors for the first 4 HRs of installation.
      b) Inspect approximately 25 PCT of adhesive anchors thereafter.
      c) Additional inspection will be required for different installer or if the quality of installation appears to vary.

c. Mechanical splices.
   1) Inspect in accordance with ICC-ES report.
   2) Frequency:
      a) Inspect all mechanical splices prior to placing concrete.
      b) Inspect approximately 25 PCT of mechanical splices thereafter.
      c) Additional inspection will be required for different installer or if the quality of installation appears to vary.

++ END OF SECTION ++

SECTION 03251

CONCRETE JOINTS

PART 1 - GENERAL

1.1 DESCRIPTION

A. Scope:
   1. Provide all labor, materials, equipment and incidentals as shown, specified and required to furnish and install concrete joints.
   2. The types of concrete joints required include the following:
      a. Construction joints.
      b. Expansion joints.
      c. Control joints.
      d. Isolation joints.
      e. Waterstops.

B. General: All joints subject to hydrostatic pressure or in contact with soil, except non-water bearing slabs-on-grade, shall be provided with continuous waterstop.

1.2 QUALITY ASSURANCE

A. Standard Specifications Details:
   1. Conform all applicable requirements of Sections No. 505 and 729 of the Uniform Standard Specifications for Public Works Construction by the Maricopa Association of Governments (MAG) as supplemented by the City of Chandler. Where there is a conflict between MAG Standard Specifications as supplemented by the City of Chandler and this Specification, provisions of this Specification shall govern.

B. Reference Standards: Comply with applicable provisions and recommendations of the following, except as otherwise shown or specified:
   1. ACI 301, Standard Specifications for Structural Concrete.
   2. ASTM C 920, Standard Specification for Elastomeric Joint Sealants.
   3. ASTM D 412, Test Methods for Vulcanized Rubber and Thermoplastic Rubbers and Thermoplastic Elastomers-Tension.
   4. ASTM D 471, Standard Test Method for Rubber Property—Effect of Liquids.
   5. ASTM D 624, Test Method for Tear Strength of Conventional Vulcanized Rubber and Thermoplastic Elastomers.
   6. ASTM D 994, Standard Specification for Preformed Expansion Joint Filler for Concrete (Bituminous Type).
   7. ASTM D 1056, Standard Specification for Flexible Cellular Materials-Sponge or Expanded Rubber.

8. ASTM D 1751, Standard Specification for Preformed Expansion Joint Filler for Concrete Paving and Structural Construction (Nonextruding and Resilient Bituminous Types).
9. ASTM D 1752, Standard Specification for Preformed Sponge Rubber and Cork Expansion Joint Fillers for Concrete Paving and Structural Construction.
10. ASTM D 2240, Test Method for Rubber Property – Durometer Hardness.
11. CRD-C572, U.S. Army Corps of Engineers Specifications for Polyvinyl-Chloride Waterstop.

C. All manufactured items shall be installed in accordance with manufacturer's instructions.

1.3 SUBMITTALS

A. Shop Drawings: Submit for approval the following:
1. Comply with the requirements of Section 01332, Shop Drawing Procedures.
2. Manufacturer's specifications and installation instructions for all materials required.
3. Layout of all construction and expansion joint locations prior to the submittal of steel reinforcement Shop Drawings.
4. Drawing indicating location, size and type of prefabricated waterstop joints.
5. A copy of this specification section, with addendum updates included, and all referenced and applicable sections, with addendum updates included, with each paragraph check-marked to indicate specification compliance or marked to indicate requested deviations from specification requirements. Check marks (✓) shall denote full compliance with a paragraph as a whole. If deviations from the specifications are indicated, and therefore requested by the CONTRACTOR, each deviation shall be underlined and denoted by a number in the margin to the right of the identified paragraph, referenced to a detailed written explanation of the reasons for requesting the deviation. The ENGINEER shall be the final authority for determining acceptability of requested deviations. The CONTRACTOR shall furnish equipment and/or services as specified if an exception and/or deviation is rejected. The remaining portions of the paragraph not underlined will signify compliance on the part of the CONTRACTOR with the specifications. Failure to include a copy of the marked-up specification sections, along with justification(s) for any requested deviations to the specification requirements, with the submittal shall be sufficient cause for rejection of the entire submittal with no further consideration.

1.4 PRODUCT DELIVERY, STORAGE AND HANDLING

A. All materials used for joints in concrete shall be stored on platforms or in enclosures and covered to prevent contact with the ground and exposure to the weather and

direct sunlight. Storage and handling requirements of the manufacturer shall also be followed.

PART 2 - PRODUCTS

2.1 GENERAL

A. Subject to compliance with the Contract Documents, the manufacturers listed in this article are acceptable.

2.2 WATERSTOPS, PVC TYPE

A. Acceptable manufacturers:
   1. Sika Greenstreak Plastic Products.
   2. W.R Meadows.
   3. Vinylex Corporation.
   4. Bometals, Inc.
   5. Or equal.

B. Materials:
   1. Virgin polyvinyl chloride compound not containing scrap or reclaimed materials or pigment.
   2. Cast-in-place type: USACE CRD-572.
   3. Approved profiles as listed.
      a. Construction joints:
         1) Ribbed: 6 inches wide by 3/8 inch.
         2) Sika Greenstreak Plastic Products Style #679, or equal.
      b. Control joints:
         1) 6-inch wide by 3/8 inch thick with ribs and center bulb.
         2) Sika Greenstreak Plastic Products Style #705, or equal.
      c. Expansion joint:
         1) 9 inches wide by 3/8 inch thick center bulb two inch outside diameter.
         2) Sika Greenstreak Plastic Products Style #700, or equal.
   4. Provide factory-made waterstop fabrications at all changes in direction, intersections and transitions, leaving only straight butt splices for the field. Butt welds to be a minimum six inches clear of the intersection.
   5. Factory prepunched (less than 1.5 feet on centers, each edge, staggered) for wire supports.
      a. Provide hog rings or grommets at all punched holes along the length of the waterstop.
   6. See Drawings for application and other requirements.

C. Waterstops, TPE/TPV:

1. Acceptable manufactures:
   a. JP Specialties, Inc.
   b. Westec.
   c. Or equal.
2. Materials:
   a. Synthetic rubber with high resistance to oils solvents and aggressive chemicals.
   b. Material shall allow not more than 35 percent maximum change in material properties after seven day exposure to selected chemicals, in accordance with ASTM D471.
   c. Waterstop shall be resistant to the following chemicals:
      1) Diesel fuel.

D. Waterstops, Preformed Strip Type:
1. Acceptable manufacturers:
   a. Sika Greenstreak Plastics, Inc. (Hydrotite).
   b. Adeka Ultra Seal USA (MC-2010MN).
   c. DeNeef (Swellseal 2010).
   d. Or equal.
2. Hydrophilic, non-bentonite composition.
3. Manufactured solely for the purpose of preventing water from traveling through construction joints.
4. Volumetric expansion limited to three times maximum.
5. See the Drawings for locations, applications, and other requirements.

E. Water Swelling Sealant:
1. Required adhesive for use with strip-type waterstop.
2. Compatible with strip-type waterstop.
3. Single component, gun applied.
4. Moisture cured.
5. Minimum 70 percent volumetric expansion swelling capability.

2.3 CONCRETE CONSTRUCTION JOINT ROUGHENER

A. Provide a water-soluble non-flammable, surface-retardant roughener.

B. Product and Manufacturer: Provide one of the following:
1. Rugasol-S, as manufactured by Sika Corporation for horizontal joints only.
2. Concrete Surface Retarder-Formula S, as manufactured by Euclid Chemical Company, for horizontal joints only.
3. Concrete Surface Retarder-Formula F, as manufactured by Euclid Chemical Company, for vertical joints only.
4. Or equal.

2.4 EPOXY BONDING AGENT

A. Provide a two-component epoxy-resin bonding agent.

B. Product and Manufacturer: Provide one of the following:
   1. Sikadur 32 Hi-Mod LPL, as manufactured by Sika Corporation.
   2. Eucopoxy LPL, as manufactured by the Euclid Chemical Company.
   3. Or equal.

2.5 EPOXY-CEMENT BONDING AGENT

A. Provide a three component epoxy resin-cement blended formulated as a bonding agent.

B. Product and Manufacturer: Provide one of the following:
   1. Sika Armatec 110 EpoCem, as manufactured by Sika Corporation.
   2. Corr-Bond, as manufactured by the Euclid Chemical Company.
   3. Or equal.

2.6 RUBBER BONDING AGENT

A. Product and Manufacturer: Provide one of the following:
   1. Scotch-Grip 1300 Rubber Adhesive, as manufactured by 3M Company.
   2. Or equal.

2.7 ASPHALT EXPANSION JOINT FILLERS

A. Acceptable manufacturers:
   1. W.R Meadows.
   2. J and P Petroleum Products.
   3. Or equal.

B. Materials: ASTM D994.

2.8 FIBER EXPANSION JOINT FILLERS

A. Materials: ASTM D1751.

2.9 PREFORMED EXPANSION JOINT FILLER

A. Materials: ASTM D 1752, Type I (sponge rubber) or Type II (cork).

2.10 NEOPRENE EXPANSION JOINT FILLERS

A. Acceptable manufacturers:
   1. Permaglaze.

2. Rubatex.
3. Williams Products.
4. Or equal.

B. Materials:
1. Closed cell neoprene.
2. ASTM D1056, Type 2, Class A or C.
3. Grade: Compression deflection as required to limit deflection to 25 percent of joint thickness under pressure from concrete pour height.

2.11 JOINT SEALANT

A. Sealant used in expansion joints and other locations where it is shown and which will be subject to being submerged by water for any period of time shall be a two part polyurethane type sealant meeting the requirements of ASTM C 920, Type M, Class 25. The sealant shall be specially formulated for continuous submerged conditions. The manufacturer's recommended primer must be used with the sealant.

B. The sealant shall meet the following requirements (measured at 73 degrees F and 50 percent RH):
1. Ultimate hardness (ASTM D 2240, Type A, Shore): 20 to 45.
2. Tensile strength (ASTM D 412): 200 psi, minimum.
3. Ultimate elongation (ASTM D 412): 400 percent, minimum.
4. Tear strength (ASTM D 624, die C): 75 pounds per inch of thickness, minimum.
5. Color: light gray.

C. Product and Manufacturer: Provide one of the following:
1. Permapol RC-270 Reservoir Sealant, as manufactured by Products Research and Chemical Corporation.
2. Sikaflex-2c, as manufactured by Sika Corporation.
3. Or equal.

2.12 SEALANT ACCESSORIES

A. Backer Rod: Backer rod shall be an extruded closed-cell polyethylene foam rod. The material shall be compatible with the sealant material used and shall have a tensile strength of not less than 40 psi and a compression deflection of approximately 25 percent at 8 psi. The rod shall be 1/8-inch larger in diameter than the joint width at joints less than 3/4-inch wide and 1/4-inch larger in diameter at joints 3/4-inch and wider.

B. Bond Breaker Tape: Bond breaker shall be polyethylene or TFE-fluorocarbon self adhesive tape, as recommended by the manufacturer.

PART 3 - EXECUTION

3.1 INSPECTION

A. Examine the substrate and the conditions under which Work is to be performed and notify ENGINEER, in writing, of unsatisfactory conditions. Do not proceed with the Work until unsatisfactory conditions have been corrected in a manner acceptable to ENGINEER.

3.2 JOINTS AND EMBEDDED ITEMS

A. Construction Joints - General:
   1. Provide joints at locations as shown or indicated on the Drawings or as shown on approved Shop Drawings approved by ENGINEER or in an appropriate Contract modification.
      a. Where construction joint spacing shown on the Drawings exceeds the joint spacing indicated in Paragraph B. below, submit proposed construction joint location in conformance with this Section.
   2. Unplanned construction joints are unacceptable.
      a. If concrete cannot be completely placed between planned construction joints, then it must be removed.
   3. In general, locate joints near middle of spans of slabs, beams and girders unless a beam intersects a girder at this point, in which case, offset joint in girder a distance equal to twice the width of the beam.
   4. Locate joints in walls and columns at underside of floors, slabs, beams, or girders, and at tops of foundations or floor slabs, unless shown otherwise.
      a. At Contractor's option, beam pockets may be formed into concrete walls.
      b. Size pockets to allow beam reinforcing to be placed as detailed on the Drawings.
   5. Place beams, girders, column capitals and drop panels at same time as slabs.
   6. Make joints perpendicular to main reinforcement with all reinforcement continuous across joints.
   7. Provide the following joints unless shown or indicated otherwise on the Drawings:
      a. Roughen joints: horizontal and vertical construction joints.
   8. Roughen construction joints:
      a. Clean the previously hardened concrete interface and remove all laitance.
      b. Intentionally roughen the interface to a full amplitude of 1/4 inch.
      c. Provide recessed flat surface as required to install strip type waterstops.
   9. Minimum time before placement of adjoining concrete construction:
      a. All concrete: 60 hours, unless otherwise noted.

B. Construction Joints - Spacing Unless Otherwise Specified:
   1. Structures not intended to contain liquid:

a. Wall vertical construction joints:
   1) 50 feet maximum on centers.
   2) At wall intersections, 4 feet minimum from corner.
b. Base slab, floor, and roof slab construction joints:
   1) Placements to be approximately square and not to exceed 4,000 square feet.
   2) Maximum side dimension of a slab pour shall be 90 feet.

2. Water retaining structures:
   a. Wall vertical construction joints:
      1) 30 feet maximum on centers.
      2) At wall intersections, 10 feet minimum from corner.
   b. Wall horizontal construction joints: 18 feet on centers.
   c. Walls that are thicker than 18 inches may be poured up to 24 feet tall in one pour provided the following requirements are satisfied:
      1) A test wall of similar size, height and thickness will be poured to demonstrate the quality of the concrete work.
      2) The test wall will be located as a portion of a non-water retaining wall.
         a) The test wall will include a waterstop at the bottom of the wall.
         b) Alternatively, a separate test wall, not part of the final Work, may be constructed.
      3) The concrete placement and concrete quality of the test wall will be observed by the ENGINEER.
         a) Concrete will be judged on the following:
            i) Ability to keep bottom of the pour clean and free from trash and debris.
            ii) Ability to protect the waterstop from folding over due to the force of falling concrete.
            iii) Ability to properly consolidate all concrete in the wall pour, including below formed openings.
      4) ENGINEER will evaluate the Contractor's work and may accept taller concrete wall pours if concrete quality is acceptable.
      5) Preparation for all subsequent wall pours over 18 feet tall must be the same as the preparation of the test wall.
      6) Should the quality of concrete work on subsequent wall pours be judged inadequate, when compared to the original accepted test wall, the Contractor may be directed to limit wall pour heights to 18 feet as originally specified.
      7) Should the quality of concrete work on the test wall be judged inadequate, additional test walls will not be observed and judged to allow pour heights greater than 18 feet unless approved by ENGINEER.
   d. Floor slab, construction joints:

1) Placements to be approximately square and not to exceed 2,000 square feet.
2) Maximum side dimension of a slab pour to be less than:
   a) Twice the length of the short side.
   b) 60 feet.

e. Elevated slab construction joints:
   1) Placements to be approximately square and not to exceed 4,000 square feet.
   2) Maximum side dimension of a slab pour to be less than:
      a) Twice the length of the short side.
      b) 70 feet.

C. Construction Joints - Bonding:
1. Obtain bond between concrete pours at construction joints by thoroughly cleaning and removing all laitance from construction joints.
2. Before new concrete is placed, all construction joints shall be coated with cement grout, or dampened, as indicated below:
3. Roughen construction joints:
   a. Roughen the surface of the concrete to expose the coarse aggregate uniformly with 1/4 inch minimum amplitude.
      1) Remove laitance, loosened particles of aggregate or damaged concrete at the surface.
   b. Cover the hardened concrete of horizontal joints with a coat of cement grout of similar proportions to the concrete, except provide fine aggregate in lieu of coarse aggregate.
   c. Provide 2 inches to 5 inches layer of grout in bottoms of walls with waterstops. Place grout immediately before placing concrete.
   d. Place fresh concrete before the grout has attained its initial set.
      1) Vibrate grout and first layer of concrete simultaneously to commingle the materials.
   e. At Contractor's option, 1/4 inch minimum amplitude may be created by utilizing a chemical retarder placed on the formed surface of the concrete in conjunction with power washing.
      1) See Paragraph 2.3 for product information.

D. Slab On Grade Joints:
1. Construction joints:
   a. Locate construction and control joints in slabs on grade as shown or indicated on the Drawings.
   b. Construction joints act as control joints.
2. Control joints:
   a. Provide contraction (control) joints as indicated.
   b. If not shown, provide along column centerlines.

c. Where column centerline spacing or spacing between column centerlines and walls exceeds 20 feet, provide an intermediate joint at intervals not exceeding 20 feet.
d. Locate joints to produce panels that are as square as possible with length not exceeding 1.5 times width.
e. Also provide joints where change in slab width occurs, such as at block-outs, pits, etc.
f. If saw cut joints are required or permitted, time cutting properly with set of concrete by one of the following methods:
   1) A conventional saw, cutting as soon as possible after final finishing when cutting action will not tear, ravel, abrade, or otherwise damage surface and before concrete develops random contraction cracks. Cut to a depth of 1/4 slab thickness or 1/3 slab thickness if steel-fiber or structural synthetic macro fiber reinforcement is used.
   2) An early entry saw beginning immediately after final finishing when cutting action will not tear, ravel, abrade, or otherwise damage surface and before concrete develops random contraction cracks.
      a) Remove debris in path of cut and under skid plate before cutting. Skid plate must remain flat on surface.
      b) Use early entry saw blades and skid plates.
      c) Install early entry joint protector at saw-cut intersection prior to cross-cut.
      d) Remove dry powder without disturbing finish.
      e) Avoid traffic across saw cut until sufficient strength is gained to protect joint edges.
   3) Complete before shrinkage stresses become sufficient to produce cracking.

E. Isolation joints:
   1. Wherever a sidewalk or other slab on grade abuts a concrete structure and is not shown doweled into that structure, an isolation joint shall be provided. Such joint shall be formed by a 1/2-inch joint filler with the upper 1/2-inch of the joint filled with sealant unless otherwise indicated on the Drawings.

F. Expansion Joints:
   1. Do not allow reinforcement or other embedded metal items bonded to concrete (except smooth dowels bonded on only one side of joint) to extend continuously through an expansion joint.
   2. Use neoprene expansion joint fillers, unless shown or indicated otherwise on the Drawings.
   3. Locate and install expansion joints as shown. Install joint filler in accordance with manufacturer's instructions. Sealants shall be installed as specified herein.

G. Waterstops - General:

1. Waterstop shall be continuous with splices in accordance with manufacturer's instructions and create water tight joints.
2. Do not mix different types of waterstop materials in the same structure without approval from the ENGINEER unless shown or indicated on the Drawings.
3. Preformed strip type:
   a. Locate waterstop at center of wall, unless shown or indicated otherwise on the Drawings.
      1) Maintain at least three inches from edge of concrete or as recommended by manufacturer.
   b. Install in a bed of swelling sealant on smooth surface of hardened concrete by use of nails, adhesive or other means as recommended by manufacturer to prevent movement of waterstop during placement of concrete.
   c. Roughened joints shall be specially prepared during concrete placement to provide smooth surface for proper water stop installation.
   d. Use in joints against existing concrete where shown or indicated on the Drawings.
4. PVC/ TPE/TPV waterstops:
   a. Pre-position waterstop accurately in joints, with adequate clearance from all reinforcing. Do not push waterstop into wet concrete.
   b. Secure waterstops in correct position using hog rings or grommets spaced no more than 1.5 feet maximum staggered along each edge full length and passed through the edge of the waterstop.
      1) Tie wire to adjacent reinforcing.
   c. Provide retrofit waterstops with batten bars, anchors and adhesive gel as specified by manufacturer.
   d. Hold horizontal waterstops in place with continuous supports.
   e. Install according to manufacturer's instructions.
      1) Do not displace reinforcement from required location.
   f. Splice ends and intersections with perpendicular butt splice using electrical splicing iron in accordance with manufacturer's instructions.
      1) Use factory fabricated "T" and corner intersection fittings.
      2) Field splice straight runs of material.
   g. Unless otherwise noted, provide for construction joints in new construction for all structures indicated on the Drawings.

H. Other Embedded Items:
   1. Place sleeves, inserts, anchors, and embedded items required for adjoining work or for its support, prior to initiating concreting.
   2. Do not route electrical conduit, drains, or pipes in concrete slabs, walls, columns, foundations, beams or other structural members unless approved by ENGINEER.

I. Placing Embedded Items:
   1. Support against displacement.

2. Fill voids in sleeves, inserts and anchor slots temporarily with readily removable material to prevent entry of concrete into voids.
3. Provide adequate means for anchoring waterstop in concrete.
   a. Provide means to prevent waterstops in the forms from being folded over by the concrete as it is placed.

3.3 BONDING AGENT

A. Use epoxy bonding agent for bonding of fresh concrete to concrete that has been in place for at least 60 days or to existing concrete.

B. Use epoxy-cement bonding agent for the following:
   1. Bonding toppings and concrete fill to concrete that has been in place for at least 60 days or to existing concrete.
   2. For all locations where bonding agent is required and concrete cannot be placed within the open time period of epoxy bonding agent.
   3. Bonding of horizontal construction joints where these are required by the Drawings or approved by ENGINEER for foundation mats that are five feet thick or greater.

C. Use a cement-water slurry as a bonding agent for toppings and concrete fill to new concrete. The cement water slurry shall be worked into the surface with a stiff bristle broom and concrete shall be placed before the cement-water slurry dries.

D. Handle and store bonding agent in compliance with the manufacturer's printed instructions, including safety precautions.

E. Mix the bonding agent in complete accordance with the instructions of the manufacturer.

F. Before placing fresh concrete, thoroughly roughen and clean hardened concrete surfaces and coat with bonding agent not less than 1/16-inch thick. Place fresh concrete while the bonding agent is still tacky (within its open time), without removing the in-place bonding agent coat, and as directed by the manufacturer.

3.4 SEALANT INSTALLATION

A. Sealants shall be installed according to the manufacturer’s recommendations for sealant which is to be subjected to continuous submerged conditions and the following requirements. Prior to sealant installation, arrange to have a representative of the sealant manufacturer instruct the crew doing the Work as to the proper methods of surface preparation, mixing, and application of the sealant.

B. Surfaces to receive sealant shall be cleaned of all materials which could interfere with proper bonding. Concrete surfaces shall have all fins or other defects removed or

repaired and shall receive a light abrasive blasting prior to priming and sealant application. All surfaces to receive sealant shall be completely dry.

C. Spaces to receive sealant shall be filled with joint filler as shown. Where not shown, the space shall be filled with joint filler or a backer rod so that the depth of sealant does not exceed the width of the space. Where the bottom of the space to receive sealant is formed by a material other than backer rod, a bond breaker tape shall be placed. The maximum sealant depth, at middle of the joint width, shall be 1/2-inch.

D. The primer and sealant used shall be supplied by the same manufacturer. No sealant shall be placed without the use of a primer.

E. Self-leveling sealants shall only be used in joints with a slope less than 0.5 percent and where maximum and minimum sealant depths can be maintained. Non-sag sealant shall be used at all other locations and may be used instead of self-leveling sealant. All non-sag sealant shall be tooled to a uniform concave surface before skinning and curing begins.

F. Sealant material shall be conditioned to be within the optimum temperature range recommended by the manufacturer for installation for a minimum of 16 hours prior to installation. Installation shall proceed only when the substrate is at a temperature recommended by the manufacturer. Sealant shall not be placed if there is a threat of imminent rainfall. Submit a letter certifying that the applied sealants were installed in accordance with the manufacturer’s recommendations, including temperature, relative humidity, etc.

G. All joints to receive sealant shall be inspected by the ENGINEER prior to sealant placement.

H. All sealant shall achieve final cure at least seven days before the structure is filled with water.

I. Any sealant which, after the manufacturer's recommended curing time for the job conditions, fails to fully and properly cure shall be completely removed. The surfaces to receive sealant shall be completely cleaned of all traces of the improperly cured sealant and primer. The specified sealant shall then be reinstalled. All costs of such removal, surface treatment, and reinstallation shall be at the expense of CONTRACTOR.

3.5 FIELD QUALITY CONTROL

A. Special Inspection:
   1. See Section 01416.
   2. Special Inspection (non-code required) is required for:
      a. Concrete Joints:

1) Inspect concrete joints for proper joint type, dimensions, reinforcing, dowel alignment, surface preparation and location.
2) Frequency: Prior to each concrete pour.

b. Waterstops:
1) Visually inspect waterstops for proper location, continuity, installation to prevent displacement, cleanliness and damage to waterstop.
2) Frequency:
a) Prior to each concrete pour
3) Testing PVC/TPE/TPV Waterstop Joints:
a) Samples of field fabricated waterstop butt joints may be selected at random by the ENGINEER for testing by a laboratory at the CONTRACTOR'S expense.
i) When tested, they shall have a tensile strength across the joints equal to at least 600 psi.

B. Supplier’s Onsite Services:
1. Waterstop manufacturer's representative shall provide on-site training of waterstop installation, field splicing, welding and inspection procedures prior to construction.

++ END OF SECTION ++

SECTION 03252

ANCHORAGE IN CONCRETE

PART 1 - GENERAL

1.1 DESCRIPTION

A. Scope:
   1. Provide all labor, materials, equipment and incidentals as shown on the Drawings, specified, and required to furnish and install anchor bolts, concrete anchors (adhesive and expansion anchors), and concrete inserts.

B. Coordination: This Section includes all bolts, anchors and inserts required for the Work but not specified under other Sections.

C. The types of work using anchor bolts and anchors drilled into concrete includes, but is not limited to, the following:
   1. Structural members and accessories.
   2. Metal, wood, and plastic fabrications.
   3. Equipment.
   4. Sluice and slide gates.
   5. Stop log frames
   6. Piping.
   7. Grating and floor plate.

1.2 QUALITY ASSURANCE

A. Reference Standards: Comply with the applicable provisions and recommendations of the following, except as otherwise shown and specified.
   1. ACI 318, Building Code Requirements for Structural Concrete and Commentary.
   2. ACI 355.2, Seismic Testing of Post-Installed Concrete and Masonry Anchors in Cracked Concrete.
   3. ACI 355.4, Qualification of Post-Installed Adhesive Anchors in Concrete.
   4. American Concrete Institute/Concrete Reinforcing Steel Institute (ACI-CRSI):
      a. Adhesive Anchor Installation Certification Program: Adhesive Anchor Installer.
   5. ASTM A 36, Specification for Structural Steel.
   6. ASTM A 108, Standard Specification for Steel Bar, Carbon and Alloy, Cold-Finished.
   7. ASTM A 123, Specification for Zinc (Hot-Dip Galvanized) Coatings on Iron and Steel Products.

8. ASTM A 153, Specification for Zinc Coating (Hot-Dip) on Iron and Steel Hardware.
9. ASTM A 307, Specification for Carbon Steel Bolts and Studs, 60,000 psi Tensile Strength.
10. ASTM A 484/A 484M, Specification for General Requirements for Stainless and Heat-Resisting Steel Bars, Billets and Forgings.
11. ASTM A 525, Specification for General Requirements for Steel Sheet, Zinc-Coated (Galvanized) by the Hot-Dip Process.
12. ASTM A 536, Specification for Ductile Iron Castings.
13. ASTM A 570/A 570M, Specification for Structural Steel, Sheet and Strip, Carbon, Hot-Rolled.
14. ASTM B 633, Specification for Electrodeposited Coatings of Zinc on Iron and Steel.
15. ASTM F 593, Specification for Stainless Steel Bolts; Hex Cap Screws, and Studs.
16. ASTM F 1554, Standard Specification for Anchor Bolts, Steel, 36, 55, and 105-ksi Yield Strength.
17. ASTM F 2329, Standard Specification for Zinc Coating, Hot-Dip, Requirements for Application to Carbon and Alloy Steel Bolts, Screws, Washers, Nuts, and Special Threaded Fasteners
18. Federal Specification, FF-S-325 for Concrete Expansion Anchors.
19. Federal Specifications, WW-H-171E for Malleable Iron.
20. ICC Evaluation Service (ICC-ES):
    a. AC193, Acceptance Criteria for Mechanical Anchors in Concrete Elements.
    b. AC308, Acceptance Criteria for Post-Installed Adhesive Anchors in Concrete Elements.

B. Expansion anchors and inserts shall be ICBO, UL, or FM approved.

C. Qualifications:
1. Anchor designer for Contractor-designed post-installed anchors and cast in place anchorage shall be a professional civil engineer licensed in the State of Arizona.
2. Installer for post-installed anchors shall be trained by the manufacturer or certified by a training program approved by the ENGINEER.
3. Installer for adhesive anchors installed in horizontal, upward incline, or overhead applications shall be certified by ACI-CRSI Adhesive Anchor Installation Certification Program.

D. Post-installed anchors and related materials shall be listed by the following agencies:
1. ICC-ES.
2. Engineer approved equivalent.

1.3 DEFINITIONS

A. Adhesive Anchors:
   1. Post-installed anchors developing their strength primarily from chemical bond between the concrete and the anchor.
   2. Includes anchors using acrylics, epoxy and other similar adhesives.

B. Anchor Bolt: Any cast-in-place anchorage that is made of a headed (i.e. bolt) material.

C. Anchor Rod: Any cast-in-place or post-installed anchorage made from unheaded, threaded, rod or deformed bar material.

D. Concrete Anchor: Generic term for either an anchor bolt or an anchor rod.

E. Galvanizing: Hot-dip galvanizing per ASTM A123, ASTM A153 or ASTM F2329 with minimum coating of 2.0 oz of zinc per square foot of metal (average of specimens) unless noted otherwise or dictated by standard.

F. Hardware: As defined in ASTM A153 and ASTM F2329.

G. Installer or Applicator:
   1. Installer or applicator is the person actually installing or applying the product in the field at the Project site.
   2. Installer and applicator are synonymous.

H. MPII: Manufacturer's printed installation instructions.

I. Mechanical Anchors:
   1. Post-installed anchors developing their strength from attachment other than thru adhesives or chemical bond to concrete.
   2. Includes expansion anchors, expansion sleeve, screw anchors, undercut anchors, specialty inserts and other similar types of anchorages.
   3. Drop-in anchors and other similar non-ICC ES approved anchors are not allowed.

J. Post-Installed Anchor: Any adhesive or mechanical anchor installed into previously placed and adequately cured concrete.

1.4 SUBMITTALS

A. Shop Drawings: Submit for approval the following:
   1. Comply with the requirements of Specification Section 01332, Shop Drawing Procedures.
   2. Product technical data including:

a. Acknowledgement that submitted products meet requirements of referenced standards.
b. Manufacturer material data sheet for each anchor.
   1) Clearly indicate which products on the data sheet are proposed for use on the Project.
c. Manufacturer's printed installation instructions.
d. Current ICC-ES report for each post-installed anchor system indicating the following:
   1) Certification that anchors meet all requirements indicated in this Specification.
   2) Performance data showing that anchor is approved for use in cracked concrete.
   3) Seismic design categories for which anchor system has been approved.
   4) Required installation procedures.
   5) Special inspection requirements for installation.
e. Contractor Designed Post-Installed Anchors:
   1) Show diameter and embedment depth of each anchor.
   2) Indicate compliance with ACI 318, Chapter 17.
   3) Design tension and shear loads used for anchor design.
   4) Engineering design calculations:
      a) Indicate design load to each anchor.
      b) Develop anchor forces based on Design Criteria listed herein and/or manufacturer’s design information.
      c) Sealed and signed by contractor’s professional engineer.
      d) Calculations will be submitted for information purposes only.
   5) Provide torque values where pipe sleeves anchors are used.
f. Anchorage layout drawings and details:
   1) Indicate anchor diameter, embedment, length, anchor type, material and finish.
   2) Drawings showing location, configuration, spacing and edge distance.
   3) Type of post-installed anchor system used.
      a) Provide manufacturer's ICC-ES report for the following:
         i) Mechanical anchorage per ICC-ES AC193.
         ii) Adhesive anchorage per ICC-ES AC308.

B. Samples:
   1. Representative samples of concrete anchors may be requested by ENGINEER. Review will be for type and finish only. Compliance with all other requirements is exclusively the responsibility of the Contractor.

C. Informational Submittals:
   1. Certification of qualifications for each installer of post-installed anchors.
   2. Indicate successful completion or certification for each type of approved post-installed anchor as required by the Contract Documents.

3. Provide one of the following for each type of anchor, as required by this specification section:
   a. Letter from manufacturer documenting successful training completion [for mechanical anchors only].
   b. Certification of completion for Engineer approved program.

D. Shop Drawings: Submit for approval the following:
   1. Refer to and comply with the requirements of Section 01332, Shop Drawing Procedures.
   2. Setting drawings and templates for location and installation of anchorage devices.
   3. Copies of manufacturer's specifications, load tables, dimension diagrams and installation instructions for the anchorage devices.
   4. Copies of Building Code Approval Agency's Evaluation Report, UL, or FM reports certifying design values for load carrying capacities along with installation requirements for the anchorage devices.
   5. CONTRACTOR shall submit an electronic copy per Specification Section 01332, Shop Drawing Procedures.
   6. A copy of this specification section, with addendum updates included, and all referenced and applicable sections, with addendum updates included, with each paragraph check-marked to indicate specification compliance or marked to indicate requested deviations from specification requirements. Check marks (✓) shall denote full compliance with a paragraph as a whole. If deviations from the specifications are indicated, and therefore requested by the CONTRACTOR, each deviation shall be underlined and denoted by a number in the margin to the right of the identified paragraph, referenced to a detailed written explanation of the reasons for requesting the deviation. The ENGINEER shall be the final authority for determining acceptability of requested deviations. The CONTRACTOR shall furnish equipment and/or services as specified if an exception and/or deviation is rejected. The remaining portions of the paragraph not underlined will signify compliance on the part of the CONTRACTOR with the specifications. Failure to include a copy of the marked-up specification sections, along with justification(s) for any requested deviations to the specification requirements, with the submittal shall be sufficient cause for rejection of the entire submittal with no further consideration.

1.5 DELIVERY, STORAGE, AND HANDLING

A. Deliver products to job site in manufacturer's or distributor's packaging undamaged and complete with installation instructions.

B. Store above ground on skids or other supports to keep items free of dirt and other foreign debris and to protect against corrosion.

C. Protect and handle materials in accordance with manufacturer's recommendations to prevent damage or deterioration.

PART 2 - PRODUCTS

2.1 MATERIALS

A. Cast-in-place Concrete Anchors:
   1. Building and nonbuilding structures, unless otherwise specified:
      a. ASTM F1554, Grade 36 or Grade 55 with weldability supplement S1 for galvanized or non-galvanized threaded rods.
      b. ASTM A307, Grade A for galvanized headed bolts.
      c. For Submerged or used in enclosed tankage, ASTM F593, Type 316.
   2. All other cast-in-place concrete anchors for equipment:
      a. Stainless steel with matching nut and washer.
      b. Submerged application: ASTM F593, Type 316.
      c. Non-submerged application: ASTM F593, Type 304 or Type 316 anchors and washers
      d. Nuts for non-submerged applications, ASTM563 and coated after torqued.

B. Post-Installed Mechanical and Adhesive Concrete Anchors:
   1. Stainless steel with matching nut and washer.
   2. Submerged application: ASTM F593, Type 316.
   3. Non-submerged application: ASTM F593, Type 304 or Type 316, with ASTM A563 nuts coated after torquing.

C. Reinforcement: See Specification Section 03200, Concrete Reinforcement.

D. Headed Studs: ASTM A108 with a minimum yield strength of 50,000 psi and a minimum tensile strength of 60,000 psi.

E. Deformed Bar Anchors: ASTM A496 with minimum yield strength of 70,000 psi and a minimum tensile strength of 80,000 psi.

F. Washers:
   1. ASTM F436 unless noted otherwise, finish to match bolt.
   2. If stainless steel anchorage is being used for cast-in-place anchorage, furnish washers of the same material and alloy as in the accompanying anchorage.
   3. Plate washers: Minimum 1/4 inches thick fabricated ASTM A36 square plates as specified or required.
   4. Follow manufacturer's requirements for all post-installed anchorage.

G. Nuts:
   1. ASTM A563 for all cast-in-place anchorage.

2. If stainless steel anchorage is being used for cast-in-place anchorage in submerged or enclosed tankage, nuts shall meet ASTM F594 and be the matching material and alloy as in the accompanying anchorage.
3. Follow manufacturer's requirements if using post-installed anchorage.

H. Galvanizing Repair Paint:
1. High zinc dust content paint for regalvanizing welds and abrasions.
2. ASTM A780.
3. Zinc content: Minimum 92% in dry film.
4. ZRC "ZRC Cold Galvanizing" or Clearco "High Performance Zinc Spray."

2.2 CONTRACTOR DESIGNED ANCHORAGE

A. Manufacturers:
1. Post-installed anchor systems for the listed manufacturers will be considered only if a current ICC-ES evaluation report is submitted in accordance with the SUBMITTALS Article in PART 1 of this Specification Section and if the anchor system is approved by the ENGINEER.
   a. Hilti.
   b. Dewalt.
   c. Simpson Strong-Tie.

B. Design the anchorage when any of the following occur:
1. Design load for concrete anchorage is shown on the Drawings.
2. When specifically required by the Contract Documents.
3. When an anchorage is required but not specified in the Drawings.

C. Anchorage Design Loads:
1. Determine all of the design loads, including wind and seismic loads, per the building code. Additionally, specialty engineer is required to incorporate all static and dynamic loading forces established by the equipment manufacturer, where required for equipment.
   a. Anchorage of equipment and non-structural components: Use the actual dead and operating loads provided by the manufacturer.
2. When Contract Drawings indicate an anchor diameter or length, design shall incorporate these as "minimums." Design these anchors and provide all necessary documentation as required herein.

D. Cast-in-Place Concrete Anchors:
1. Provide the material, nominal diameter, embedment length, spacing, edge distance and design capacity to resist the calculated load based on the requirements given in the building code including ACI 318, Chapter 17.
2. Design assuming cracked concrete.

E. Post-installed Concrete Anchors:
   1. Provide the manufacturer's system name/type, nominal diameter, embedment depth, spacing, minimum edge distance, cover, and design capacity to resist the specified or calculated load based on requirements given in the building code, ACI 318, Chapter 17 and current ICC-ES report, for the anchor to be used.
   2. Design assuming cracked concrete.

2.3 ENGINEER DESIGNED ANCHORAGE

A. When the size, length and details of anchorages are shown on Contract Structural Drawings, Contractor design of anchorage is not required unless otherwise indicated.

B. Manufacturers:
   1. Additional newer post-installed anchor systems for the listed manufacturers will be considered only if a current evaluation agency report is submitted in accordance with the SUBMITTALS Article in PART 1 of this Specification Section, the anchor system is certified by ICC-ES for cracked concrete conditions, and if approved by the ENGINEER.
   2. Mechanical Anchors in Concrete:
      a. Hilti:
         1) Kwik Bolt TZ2 (ICC-ES ESR-4266).
   3. Adhesive Anchors in Concrete:
      a. Hilti:
         1) HIT RE 500 V3 (ICC ESR-3814).
   4. Screw Anchors in Concrete:
      a. Hilti:
         1) KH-EZ Screw (ICC-ES ESR-3027).
   5. Substitution request to indicate the proposed anchor has at least the same tension and shear strength as the specified anchor installed as indicated in the Contract Drawings.
      a. Calculations to be stamped by a Professional Engineer registered in the State of Arizona.

PART 3 - EXECUTION

3.1 GENERAL

A. Cast-in-Place Anchorage:
   1. Use where anchor rods or bolts are indicated on the Drawings, unless another anchor type is approved by the ENGINEER.
   2. Provide concrete anchorage as shown on the Drawings or as required to secure components to concrete.

B. Adhesive Anchorage:
   1. Use only where specifically indicated on the Drawings or when approved for use by the ENGINEER.
   2. May be used where subjected to vibration or where buried or submerged.
   3. Do not use in overhead applications or sustained tension loading conditions such as utility hangers.
   4. Contact ENGINEER for approval when anchors will not be installed in compliance with MPII

C. Mechanical Anchorage:
   1. Use only where specifically indicated on the Drawings or when approved for use by the ENGINEER.
   2. Do not use where subjected to vibration.
   3. May be used in overhead applications.
   4. Contact ENGINEER for clarification when anchors will not be installed in compliance with manufacturer's printed installation requirements.

D. Do not use powder actuated fasteners and other types of bolts and fasteners not specified herein for structural applications unless approved by the ENGINEER or specified in Contract Documents.

3.2 PREPARATION

A. Provide adequate time to allow for proper installation and inspection prior to placing concrete for cast-in-place concrete anchorage.

B. Prior to installation, inspect and verify areas and conditions under which concrete anchorage is to be installed.
   1. Notify ENGINEER of conditions detrimental to proper and timely completion of work.
   2. Do not proceed with work until unsatisfactory conditions have been corrected in a manner acceptable to the ENGINEER.

C. Special Inspection is required in accordance with the building code for all concrete anchorage.
   1. Notify the Special Inspector that an inspection is required prior to concrete placement (or during post-installed anchorage installation).
   2. See the FIELD QUALITY CONTROL Article in PART 3 of this Specification Section for additional requirements.

D. Post-installed anchor manufacturer’s representative shall demonstrate and observe the proper installation procedures for the post-installed anchors at no additional expense to the OWNER.
   1. Follow such procedures to assure acceptable installation.

2. Adhesive anchors must be installed in concrete aged a minimum of 21 days.

3.3 INSTALLATION

A. Tie cast-in-place anchorage in position to embedded reinforcing steel using wire.
   1. Tack welding of anchorage is prohibited.
   2. Chase threads as required and coat the projected portion of carbon steel anchors and nut threads with a heavy coat of clean grease after concrete has cured.
   3. Anchorage location tolerance shall be in accordance with AISC 303.
   4. Provide steel or durable wood templates for all column and equipment anchorage.
      a. Templates to be placed above top of concrete and not impede proper concrete placement and consolidation.

B. Unless noted or specified otherwise:
   1. Connect aluminum and steel members to concrete using stainless steel cast-in-place anchorage unless shown otherwise.
   2. Provide washers for all anchorage.
   3. Where exposed, extend threaded anchorage a maximum of 3/4 inches and a minimum of 1/2 inches above the top of the fully engaged nut.
      a. If anchorage is cut off to the required maximum height, threads must be dressed to allow nuts to be removed without damage to the nuts.

C. Do the following after nuts are snug-tightened down:
   1. If using post-installed anchorage, follow MPII.
   2. Upset threads of anchorage to prevent nuts from backing off.
      a. Provide double nut or lock nut in lieu of upset threads for items that may require removal in the future.
   3. For all other cast-in-place anchorage material, tighten nuts down an additional 1/8 turn beyond snug tight to prevent nuts from backing off.
   4. If two nuts are used per concrete anchor above the base plate, tighten the top nut an additional 1/8 turn to "lock" the two nuts together.
   5. If using post-installed anchorage, follow MPII.

D. Assure that embedded items are protected from damage and are not filled in with concrete.

E. Secure architectural components such that it will not be aesthetically distorted and fasteners will not be overstressed from expansion, contraction, or installation.

F. Repair damaged galvanized surfaces in accordance with ASTM A780.
   1. Prepare damaged surfaces by abrasive blasting or power sanding.
   2. Apply galvanizing repair paint to minimum 6 mils DFT in accordance with manufacturer's instructions and ASTM A780.

G. For post-installed anchors, comply with the MPII on the hole diameter and depth required to fully develop the tensile strength of the anchor or reinforcing bar.
   1. Use hammer drills to create holes.
   2. Properly clean out the hole per the ICC-ES reports utilizing a non-metallic fiber bristle brush and compressed air or as otherwise required to remove all loose material from the hole prior to installing the anchor in the presence of the Special Inspector.

3.4 FIELD QUALITY CONTROL

A. Special Inspection:
   1. See Specification Section 01416, Special Inspections.

B. Field Inspection and Testing
   1. CONTRACTOR to employ a testing laboratory to perform field quality testing of all installed anchors. Such testing shall conform to requirements of ACI 355.2 and/or ACI 355.4 as applicable.
      a. OWNER reserves the right to inspect and test completed anchorage at a minimum of 10% (for large quantity) to 25% (smaller quantity) to 100% (very small project quantity). . ENGINEER is to determine the level of testing which is required for the various types of adhesive anchors and anchor bolts.
      b. Such testing shall conform to requirements of ACI 355.2 and/or ACI 355.4 as applicable.
   2. If failure of any of the tested anchors or reinforcing bars occurs, the OWNER reserves the right to inspect and test all remaining anchors of the same type.
   3. The independent testing and inspection agency shall complete a report on each area of the Work where concrete anchors are installed. The report shall summarize the observations made by the inspector and be submitted to ENGINEER.
   4. Failed anchors shall be satisfactorily replaced at no cost to OWNER.

3.5 CLEANING

A. After concrete has been placed, remove protection and clean all anchorage of all concrete, dirt, and other foreign matter.

++ END OF SECTION ++

SECTION 03300

CAST-IN-PLACE CONCRETE

PART 1 - GENERAL

1.1 DESCRIPTION

A. Scope:
   1. Provide all labor, materials, equipment and incidentals as shown on the Drawings, specified and required to furnish and install cast-in-place concrete.
   2. The Work includes providing concrete consisting of portland cement, fine and coarse aggregate, water, and approved admixtures; combined, mixed, transported, placed, finished and cured. The Work also includes:
      a. Providing openings in concrete to accommodate the Work under this and other Sections and building into the concrete all items such as sleeves, frames, anchor bolts, inserts and all other items to be embedded.

B. Coordination:
   1. Review installation procedures under other Sections and coordinate the installation of items that must be installed in the concrete.

C. Classifications of Concrete:
   1. Type "1" concrete shall be steel reinforced and includes the following:
      a. All cast-in-place concrete, unless indicated otherwise.
   2. Type "2" concrete shall be placed without forms or with simple forms, with little or no reinforcing, and includes the following:
      a. Concrete fill within structures greater than or equal to 4-inches thick. Where less than 4-inches thick, provide Grout Fill topping grout in conformance with Section 03600 Grout.
      b. Duct banks.
      c. Unreinforced encasements.
      d. Curbs and gutters.
      e. Sidewalks.
      f. Thrust blocks.
   3. Type "3" concrete shall be steel reinforced and includes the following:
      a. All precast concrete, unless indicated otherwise.
   4. Type "4" concrete shall be unreinforced and used where required as concrete fill under foundations, filling abandoned piping and wherever “lean” concrete is required on the Drawings. This concrete shall be one-sack Controlled Low Strength Material (CLSM) conforming to MAG Specification Section No. 728.

1.2 QUALITY ASSURANCE

A. Standard Specifications and Details:

1. Conform all applicable requirements of Sections Nos. 505, 725, 726 and 728 of the Uniform Standard Specifications for Public Works Construction by the Maricopa Association of Governments (MAG). Where there is a conflict between MAG Standard Specifications and this Specification, provisions of this Specification shall govern.

B. Reference Standards: Comply with the applicable provisions and recommendations of the following, except as otherwise shown or specified.
1. ACI 214, Recommended Practice for Evaluation of Strength Test Results of Concrete.
2. ACI 301, Specifications for Structural Concrete (includes ASTM Standards referred to herein).
3. ACI 304, Guide for Measuring, Mixing, Transporting and Placing Concrete.
4. ACI 305, Hot Weather Concreting.
5. ACI 306, Cold Weather Concreting.
6. ACI 309, Guide for Consolidation of Concrete.
7. ACI 311, Guide for Concrete Inspection.
8. ACI 318, Building Code Requirements for Structural Concrete.
9. ACI 350, Code Requirements for Environmental Engineering Concrete Structures.
10. ANSI/NSF 61, Drinking Water System Components-Health Effects.
11. AASHTO M 182, Burlap Cloth Made From Jute or Kenaf.
12. AASHTO TP 23, Proposed Standard Method of Test for Water Content of Freshly Mixed Concrete Using Microwave Oven Drying.
13. ASTM C 31, Practice for Making and Curing Concrete Test Specimens in the Field.
14. ASTM C 33, Specification for Concrete Aggregates.
15. ASTM C 39, Test Method for Compressive Strength of Cylindrical Concrete Specimens.
16. ASTM C 42, Test Method for Obtaining and Testing Drilled Cores and Sawed Beams of Concrete
17. ASTM C 94, Specification for Ready-Mixed Concrete.
18. ASTM C109, Test Method for Compressive Strength of Hydraulic Cement Mortars.
19. ASTM C 143, Test Method for Slump of Hydraulic- Cement Concrete.
20. ASTM C 150, Specification for Portland Cement.
21. ASTM C 157, Test Method for Length Change of Hardened Hydraulic-Cement Mortar and Concrete.
22. ASTM C 171, Specification for Sheet Materials for Curing Concrete.
23. ASTM C 172, Practice for Sampling Freshly Mixed Concrete.
24. ASTM C 231, Test Method for Air Content of Freshly Mixed Concrete by the Pressure Method.
25. ASTM C 260, Specification for Air-Entraining Admixtures for Concrete.
26. ASTM C 309, Specification for Liquid Membrane-Forming Compounds for Curing Concrete.

27. ASTM C 330, Specification for Lightweight Aggregates for Structural Concrete.
28. ASTM C 494, Specification for Chemical Admixtures for Concrete.
29. ASTM C 618, Specification for Fly Ash and Raw or Calcined Natural Pozzolan for Use as a Mineral Admixture in Portland Cement Concrete.
30. ASTM C 882, Test Method for Bond Strength of Epoxy-Resin Systems Used with Concrete by Slant Shear.
31. ASTM C 1240, Specification for Silica Fume for Use as a Mineral Admixture in Hydraulic-Cement Concrete, Mortar, and Grout.
32. ASTM C 1778, Standard Guide for Reducing Risk of Deleterious Alkali-Aggregate Reaction in Concrete.
33. ASTM E 154, Test Methods for Water Vapor Retarders Used in Contact with Earth Under Concrete Slabs, on Walls, or as Ground Cover.
34. ASTM E 329, Specification for Agencies Engaged in the Testing and/or Inspection of Materials Used for Construction.

C. Concrete Testing Service:
1. Field testing services for concrete will be provided by CONTRACTOR. Inspection services for concrete placement will be provided by ENGINEER.
2. The CONTRACTOR shall provide a qualified Engineering Technician who will be provided to sample the concrete. The concrete will be tested for slump, air content, and temperature at the time of placement. Sets of four (4) cylinders will be molded at each sampling. Samples shall be taken per 10 cubic yards, with a minimum of one sample per class of concrete per day. Samples will be field cured at the site and returned to selected laboratory for moist curing prior to compressive strength testing. Compressive strength testing will be conducted at 7-day (1 cylinder) and 28-day (3 cylinders) intervals. CONTRACTOR to provide concrete Sample reports to ENGINEER electronically.
    1) Testing agency shall meet the requirements of ASTM E 329.
    2) Selection of a testing laboratory is subject to ENGINEER'S approval.
    3) Submit a written description of the proposed concrete testing laboratory giving qualifications of personnel, laboratory facilities and equipment, and other information that may be requested by ENGINEER.
3. Materials and installed Work may require testing and retesting, as directed by ENGINEER, at any time during the progress of the Work. Allow free access to material stockpiles and facilities at all times. Tests not specifically indicated to be done at OWNER'S expense, including the retesting of rejected materials and installed Work, shall be done at CONTRACTOR’S expense.

D. Qualifications of Water-Reducing Admixture Manufacturer:
1. Water-reducing admixtures shall be manufactured under strict quality control in facilities operated under a quality assurance program. Furnish copy of manufacturer's quality assurance handbook to document the existence of the program. Manufacturer shall maintain a concrete testing laboratory that has

been approved by the Cement and Concrete Reference Laboratory at the Bureau of Standards, Washington, D.C.

2. Provide a qualified concrete technician employed by the admixture manufacturer to assist in proportioning the concrete for optimum use of the admixture. The concrete technician shall advise on proper addition of the admixture to the concrete and on adjustment of the concrete mix proportions to meet changing jobsite conditions.

E. Laboratory Trial Batch:
1. Each concrete mix design specified shall be verified by a laboratory trial batch, unless indicated otherwise.
2. Each trial batch shall include the following testing:
   a. Aggregate gradation for fine and coarse aggregates.
   b. Fly ash testing to verify meeting specified properties, unless the fly ash supplier provides certification by an independent testing laboratory.
   c. Slump.
   d. Air content.
   e. Compressive strength based on three cylinders each tested at seven days and at 28 days.
   f. Shrinkage test as specified herein for Type “1” concrete mix design.
3. Each trial batch shall provide the following information:
   a. Project identification name and number.
   b. Date of report.
   c. Complete identification of aggregate source of supply.
   d. Tests of aggregates for compliance with specified requirements.
   e. Scale weight of each aggregate.
   f. Absorbed water in each aggregate.
   g. Brand, type and composition of cement.
   h. Brand, type and amount of each admixture.
   i. Amounts of water used in trial mixes.
   j. Proportions of each material per cubic yard.
   k. Gross weight and yield per cubic yard of trial mixtures.
   l. Measured slump.
   m. Measured air content.
   n. Compressive strength developed at seven days and 28 days, from not less than three test cylinders cast for each seven day and 28 day test, and for each design mix.
   o. Shrinkage test results where required and as specified herein.
4. The requirement for a trial batch may be waived if the required test information has been provided in a previous laboratory trial batch run on the identical mix design within the previous two years. The same brand, type, and source of all materials must have been used.

F. Shrinkage Testing:

1. Shrinkage tests are required for mix design approval and for approval of concrete in the field.
   a. Mix design shrinkage test:
      1) The submitted mix design proportions must be the same proportions used for the laboratory mix design shrinkage test and shall indicate concrete meets the specified shrinkage limit.
      2) Compressive strength test specimens shall be taken from each concrete sample used to prepare the shrinkage specimens. These compression test specimens shall be considered as part of the normal requirements for tests on this project.
      3) Drying shrinkage for laboratory cast specimens for mix design approval shall conform to ASTM C 157, modified as follows:
         a) Curing of specimens:
            i) Remove specimens from molds at an age of 23 1/2 ± 1/2 hours after the addition of water to the cement during the mixing operation.
            ii) Upon removal of the specimens from the molds, immerse them in lime-saturated water maintained at 73 ± 1 degrees F for a minimum of 30 minutes.
            iii) At an age of 24 ± 1/2 hours after the addition of water to the cement during the mixing operation, remove the specimens from water storage one at a time, wipe with a damp cloth, and immediately take the original length (not to be confused with “base length”).
            iv) After measuring the original length, store the specimens in lime-saturated water at 73 ± 3 degrees F until they have reached an age of 7 days, including the period in the molds.
         b) At the end of the curing period, take a second measurement after the specimens have been brought to a more closely controlled temperature as was done prior to the first measurement. This measurement shall be the base length for shrinkage calculations (“zero” days drying age) and shall be expressed as a percentage of original length (expansion).
         c) Immediately store specimens in a temperature- and humidity-controlled room maintained at 73 ± 3 degrees F and 50 ± 4 percent relative humidity, for the remainder of the test. Specimens to have a clearance of at least 1 inch on all sides.
         d) Measure to determine shrinkage, expressed as percentage of base length. Compute the drying shrinkage deformation of each specimen as the difference between the base length (at “zero” days drying age) and the length after drying at each test age. Compute the average drying shrinkage deformation of the specimens to the nearest 0.0001 inch at each test age. If the drying shrinkage of any specimen departs from the average of

that test age by more than 0.0004 inch, disregard the results obtained from that specimen. Report results of shrinkage tests to the nearest 0.001 percent of shrinkage;

e) Make and report shrinkage measurements separately for 7, 14, 21, and 28 days of drying after the 7-day curing period.

b. Field shrinkage tests:

1) Field test shrinkage specimens shall be taken on the first concrete placement of each class of concrete.

2) Compressive strength test specimens shall be taken from each concrete sample used to prepare the shrinkage specimens. These compression test specimens shall be considered as part of the normal requirements for tests on this project.

3) If excessive cracking or other symptoms that are potentially related to shrinkage occur during construction, ENGINEER may require up to two (2) additional field shrinkage tests during construction to verify compliance with these Specifications.

4) The initial field shrinkage testing will establish a baseline for the shrinkage of the specified mixes that represents the concrete as placed and cured in the field.

5) The field cast specimens shall be transported to a facility that can provide temperature and humidity control prior to removing them from the molds.

6) Drying shrinkage for specimens cast in the field shall conform to ASTM C 157, modified as follows:

a) Curing of specimens:

i) Remove specimens from molds at an age of 23 1/2 ± 1/2 hours after the addition of water to the cement during the mixing operation.

ii) Upon removal of the specimens from the molds, immerse them in lime-saturated water maintained at 73 ± 1 degrees F for a minimum of 30 minutes.

iii) At an age of 24 ± 1/2 hours after the addition of water to the cement during the mixing operation, remove the specimens from water storage one at a time, wipe with a damp cloth, and immediately take the original length (not to be confused with “base length”).

iv) After measuring the original length, continue curing the specimens, with the same curing methods used in the field, until they have reached an age of 14 days, including the period in the molds.

b) At the end of the curing period, store the specimens in a temperature-and humidity-controlled room maintained at 73 ± 3 degrees F and 50 ± 4 percent relative humidity, for the remainder of the test. Specimens to have a clearance of at least 1 inch on all sides.

c) Take a second measurement immediately after the specimen's temperature has stabilized. This measurement shall be the base length for shrinkage calculations ("zero" days drying age) and shall be expressed as a percentage of original length (expansion).
d) Measure to determine shrinkage, expressed as percentage of base length. Compute the drying shrinkage deformation of each specimen as the difference between the base length (at "zero" days drying age) and the length after drying at each test age. Compute the average drying shrinkage deformation of the specimens to the nearest 0.0001 inch at each test age. If the drying shrinkage of any specimen departs from the average of that test age by more than 0.0004 inch, disregard the results obtained from that specimen. Report results of shrinkage tests to the nearest 0.001 percent of shrinkage;
e) Make and report shrinkage measurements separately for 7, 14, 21, and 28 days of drying after the 14-day curing period.

2. Shrinkage specimens shall be fabricated, cured, dried, and measured in accordance with ASTM C 157 and as modified herein. All specimens shall 11-1/4 inch ±1/8 inch for an effective gauge length of 10 inches.
   a. Shrinkage specimens for mixes with 100 percent of the aggregate passing the 1-inch sieve shall be 3 inches by 3 inches in cross section.
   b. For mixes with aggregates larger than 1 inch and with 100 percent passing a 2-inch sieve, drying shrinkage specimens shall be 4 inches by 4 inches in cross section.
3. Report shrinkage test results at intervals as specified for the type of test, either laboratory or field, according to ASTM C 157 and the type of storage, water or air respectively.
   a. The field test shrinkage shall not exceed the laboratory mix shrinkage requirement by more than 50 percent on the initial placement of each class of concrete required to be shrinkage tested.
   b. If the required field shrinkage limitation is not met, all aspects of concrete mixing, placing, sampling and curing will be subject to review. If this review points toward a solution, participate in a solution of making changes as required to establish compliance. These changes may include, but are necessarily limited to the following:
      1) Changing the curing methods.
      2) Changing the source of aggregates.
      3) Changing the amount of crushed or fractured coarse aggregate.
      4) Changing cement quantity and/or admixtures.
      5) Use of a shrinkage reducing admixture.
      6) Reducing water/cement ratio.
      7) Making changes to sampling practices
      8) Possible consideration by the ENGINEER of modifying the field shrinkage acceptance criteria.

9) Other actions designed to minimize shrinkage and to provide better quality assurance.

4. Once the initial field shrinkage testing requirement is met, subsequent shrinkage testing, done, if needed, during the remainder of the construction period shall use the field test result from each initial field shrinkage test as a base line for acceptance.
   a. If the base line acceptance criteria are not met, then the provisions of Article 1.2 F.3.b above shall be enacted to re-establish compliance.
5. These tests shall be considered a part of the normal compression tests for the project. Allowable shrinkage limitations shall be as specified in Part 2, herein.

G. Certification of Concrete Mix:
   1. The need for a trial batch may be waived if the following requirements are met. The compressive strength of each specified mix shall be verified by data from a series of a minimum of 30 consecutive tests that have been made within the previous 12 months. A test is defined as the average strength of all specimens of the same age fabricated from a sample taken from a single batch of concrete. All tests shall have been made on concrete which is identical in mix design to the submitted proposed mix design, including sources of aggregate and manufacturers of cementitious materials and admixtures. The tests must average above the specified strength with no individual test falling more than 500 psi below specified strength and no three consecutive tests averaging below specified strength. In addition, the standard deviation for the series of tests shall not exceed 640 psi as defined by ACI 214.

1.3 SUBMITTALS

A. Samples: Submit samples of materials as specified and as otherwise may be requested by ENGINEER, including names, sources and descriptions.

B. Shop Drawings: Submit for approval the following:
   1. Comply with the requirements of Section 01332, Shop Drawing Procedures.
   2. Manufacturer's specifications with application and installation instructions for proprietary materials and items, including admixtures and bonding agents.
   3. List of concrete materials and concrete mix designs proposed for use. Include the results of all tests performed to qualify the materials and to establish the mix designs.
   4. The following information, if ready-mixed concrete is used.
      a. Physical capacity of mixing plant.
      b. Trucking facilities available.
      c. Estimated average amount that can be produced and delivered to the site during a normal eight hour day, excluding the output to other customers.
      d. Each Shop Drawing Submittal shall include a hard copy of the relevant Specification Section and shall be clearly marked to indicate whether the requirements for equipment and/or services in the Specification Section are

met by writing "accept" or "deviate" next to each Paragraph. If clarifications are needed to any of the Paragraphs in the Specification Sections due to deviations, they shall be addressed next to the Paragraph as such and explained further with any additional information necessary. If any exceptions and/or deviations are proposed to any of the Specifications, they shall be clearly noted as such in the Submittal, and an explanation of any deviation and/or exception shall be provided. The CONTRACTOR shall furnish equipment and/or services as specified if an exception and/or deviation is rejected.

5. Refer to and comply with the requirements of Section 01332, Shop Drawing Procedures.
6. CONTRACTOR shall submit an electronic copy per Specification Section 01332, Shop Drawing Procedures.
7. A copy of this specification section, with addendum updates included, and all referenced and applicable sections, with addendum updates included, with each paragraph check-marked to indicate specification compliance or marked to indicate requested deviations from specification requirements. Check marks (✓) shall denote full compliance with a paragraph as a whole. If deviations from the specifications are indicated, and therefore requested by the CONTRACTOR, each deviation shall be underlined and denoted by a number in the margin to the right of the identified paragraph, referenced to a detailed written explanation of the reasons for requesting the deviation. The ENGINEER shall be the final authority for determining acceptability of requested deviations. The CONTRACTOR shall furnish equipment and/or services as specified if an exception and/or deviation is rejected. The remaining portions of the paragraph not underlined will signify compliance on the part of the CONTRACTOR with the specifications. Failure to include a copy of the marked-up specification sections, along with justification(s) for any requested deviations to the specification requirements, with the submittal shall be sufficient cause for rejection of the entire submittal with no further consideration.

C. Laboratory Test Reports: Submit copies of laboratory test reports for concrete cylinders, materials and mix design tests. ENGINEER'S review will be for general information only. Production of concrete to comply with specified requirements is the responsibility of CONTRACTOR.

D. Submit notarized certification of conformance to referenced standards when requested by ENGINEER.

E. Certification of coarse aggregate impurities as relates to alkali-silica reactivity per ASTM C33, as supplemented by ASTM C1778.

F. Certification that the aggregates to be supplied for the Project are from the same location as the aggregates represented in the following concrete mix design submittal documents:

1. Compressive strength test reports.
2. Certification document for the class of coarse aggregate meeting the requirements of ASTM C33 and project requirements for type and location of concrete construction.
3. Shrinkage test reports.

G. Certification from synthetic macrofiber manufacturer indicating that proposed fiber dosage meets or exceeds the minimum specified fe3 values in accordance with ASTM C1609.

H. Delivery Tickets: Furnish to ENGINEER copies of all delivery tickets for each load of concrete delivered to the site. Provide items of information as specified in ASTM C 94, Section 16.1.
   1. Provide batch tickets for each batch of job-site mixed concrete, as specified.

1.4 PRODUCT DELIVERY, STORAGE AND HANDLING

A. All materials used for concrete must be kept clean and free from all foreign matter during transportation and handling and kept separate until measured and placed in the mixer. Bins or platforms having hard clean surfaces shall be provided for storage. Suitable means shall be taken during hauling, piling and handling to ensure that segregation of the coarse and fine aggregate particles does not occur and the grading is not affected.

1.5 CONCRETE COORDINATION MEETING

A. A Concrete Coordination Meeting shall be held to review the detailed requirements of CONTRACTOR'S proposed concrete design mixes, to determine the procedures for producing proper concrete construction, and to clarify the roles of the parties involved shall be held no later than 14 days after the Notice to Proceed.

B. All parties involved in the concrete Work shall attend the conference, including but not limited to the following:
   1. CONTRACTOR'S representative.
   2. Testing laboratory representative.
   3. Concrete subcontractor.
   4. Reinforcing steel subcontractor and detailer.
   5. Concrete supplier.
   6. Admixture manufacturer's representative.
   7. ENGINEER.

C. The Concrete Coordination Meeting shall be held at a mutually agreed upon time and place. The ENGINEER shall be notified no less than five days prior to the date of the Concrete Coordination Meeting.

PART 2 - PRODUCTS

2.1 GENERAL

A. All admixtures, curing compounds, etc. used in concrete or the curing and repair of concrete, which can contact potable water, shall be certified as conforming to the requirements of ANSI/NSF 61 for contact with potable water when in the finished concrete.

B. Maximum total chloride ion content for concrete mix including all ingredients measured as a weight percent of cement in accordance with ASTM C1218:
   1. Prestressed concrete: 0.06.
   2. All other concrete: 0.10.

2.2 CEMENTITIOUS MATERIALS

A. Cement:
   1. Portland cement, ASTM C 150, Type II or V.
   2. Use Portland cement made by a well-known acceptable manufacturer and produced by not more than one plant. Alternate cement sources may be used provided that a mix design has been accepted and a trial batch verifying performance has been made.
   3. Do not use cement which has deteriorated because of improper storage or handling.

B. Fly Ash Mineral Admixture:
   1. Mineral admixtures, when used, shall meet the requirements of ASTM C 618 Class F, except as follows:
      a. The loss on ignition shall be a maximum of 4 percent.
      b. The maximum percent of sulfur trioxide (SO3) shall be 4.0.
   2. Fly ash shall be considered to be a cementitious material.
   3. Laboratory trial batches shall be tested to determine compliance with strength requirements, times of setting, slump, slump loss, and shrinkage characteristics.
   4. A substitution by weight, of the portland cement by fly ash, so that the total tricalcium aluminate content of the resulting cement plus fly ash is not greater than eight percent, will be considered. However, the fly ash shall not exceed 25 percent by weight of the cement plus fly ash.

2.3 AGGREGATES

A. General:
   1. Aggregates shall conform to the requirements of ASTM C 33 and as herein specified.
   2. Do not use aggregates containing soluble salts or other substances such as iron sulfides, pyrite, marcasite, ochre, or other materials that can cause stains on exposed concrete surfaces.

3. Do not use aggregates that may be deleteriously reactive when combined with alkalis in cement.
   a. Evaluate proposed aggregates for potential deleterious expansion due to alkali silica reactivity per ASTM C33, ASTM C227, ASTM C1260, ASTM 1293, or ASTM C1567.

B. Fine Aggregate: Clean, sharp, natural sand free from loam, clay, lumps or other deleterious substances.
   1. Dune sand, bank run sand and manufactured sand are not acceptable.

C. Coarse Aggregate: Clean, uncoated, processed aggregate containing no clay, mud, loam, or foreign matter, as follows:
   1. Crushed stone, processed from natural rock or stone.
   2. Washed gravel, either natural or crushed. Use of slag and pit or bank run gravel is not permitted.
   3. Lightweight Aggregate: ASTM C 330.

2.4 WATER

A. Water used in the production and curing of concrete shall be clean and free from injurious amounts of oils, acids, alkalis, organic materials or other substances that may be deleterious to concrete or steel.

2.5 CONCRETE ADMIXTURES

A. Provide admixtures produced by established reputable manufacturers, and use in compliance with the manufacturer's printed instructions. All admixtures shall be compatible and by a single manufacturer capable of providing qualified field service representation. Admixtures shall not contain thiocyanates nor more than 0.05 percent chloride ion, and shall be non-toxic in the concrete mix after 30 days. Do not use admixtures that have not been incorporated and tested in the accepted mixes, unless otherwise authorized in writing by ENGINEER.

B. Air-Entraining Admixtures: Provide air entraining admixtures complying with ASTM C 260, and that are vinsol resin or vinsol resin based.
   1. Product and Manufacturer: Provide one of the following:
      a. SIKA AER or SIKA AEA-15, as manufactured by Sika Corporation.
      b. MB-VR, as manufactured by BASF.
      c. Daravair 1000, as manufactured by Grace Construction Products.
      d. Or equal.

C. Water-Reducing Admixture: ASTM C 494, Type A.
   1. Proportion all Type "1" “2” and “3” concrete with non-air entraining, normal setting, water-reducing, aqueous solution of a modification of the salt of polyhydroxylated organic acids. The admixture shall not contain any lignin, nitrates or chlorides added during manufacture.

2. Product and Manufacturer: Provide one of the following:
   a. Eucon WR-75, as manufactured by Euclid Chemical Company.
   b. Pozzolith series, as manufactured by Master Builders, Inc.
   c. WRDA-15, as manufactured by W.R. Grace & Company.
   d. Plastocrete 161 or Plastiment NS, as manufactured by Sika Corporation.
   e. Or equal.

D. High Range Water-Reducing Admixture (HRWR): ASTM C 494, Type F/G.
1. High range water-reducer shall be used in classifications of concrete, where specified, and shall be permitted, at CONTRACTOR'S option, in all other classifications of concrete. It shall be added to concrete in compliance with the manufacturer's printed instructions. The specific admixture formulation shall be as recommended by the manufacturer for the project conditions. Provide one of the following:
   a. Sikament series, as manufactured by Sika Corporation.
   b. Rheobuild series, as manufactured by Master Builders, Inc.
   c. Daracem-100, as manufactured by W.R. Grace & Company.
   d. Eucon 37 or Eucon 537, as manufactured by the Euclid Chemical Company.
   e. Or equal.

E. Set-Control Admixtures: ASTM C 494, as follows:
1. Type B, Retarding.
2. Type C, Accelerating.
3. Type D, Water-reducing and Retarding.
4. Type E, Water-reducing and Accelerating.
5. Type F, Water-reducing, high range admixtures.
6. Type G, Water-reducing, high range, and retarding admixtures.

F. Calcium Chloride: Calcium chloride shall not be used.

G. Shrinkage Reducing Admixture:
1. A shrinkage reducing admixture shall be permitted to be used in the mix design where necessary to meet specified shrinkage limitations provided that specified strength requirements are met and there is no reduction in sulfate resistance and no increase in permeability.
2. Conform to ASTM C494, Type S.
3. Shrinkage reducing admixtures shall be one of the following:
   a. Eclipse, as manufactured by Grace Construction Products.
   b. Tetraguard AS20, as manufactured by Master Builders, Inc.
   c. Or equal.

H. Synthetic Macrofibers:
1. Conform to ASTM C1116, Type III
   a. Minimum length: 1.5 IN

b. Aspect ratio: 50 to 90.

2. Acceptable manufacturers:
   a. MasterFiber MAC Series by BASF Corporation.
   b. Strux 90/40 by GCP Applied Technologies, Inc.
   c. Tuf-Strand SF by Euclid Chemical Company.
   d. Sika Fibermesh-650 by Sika Corporation.

I. If super plasticizers are used in mix designs, the mix shall be slumped at jobsite prior to addition of plasticizer.

2.6 PROPORTIONING AND DESIGN OF MIXES

A. Prepare concrete design mixes subject to the following limitations:

Classification	Coarse Aggregate	Min. Cementious (lbs/cu yd)	Max W/C	Slump	Air	Min. Comp. Strength (psi)
Type "1"	#67	564	0.42	4"	4 ½	4500
Type "2"	#8	517	0.50	6"	1 ½	3000
Type "3"	#67	611	0.42	4"	4 ½	5000
Type "4"	Any ASTM C33	No requirements				150

1. The slumps listed are prior to the addition of high range water reducer (super plasticizer).
2. Mix designs shall be made for all but Type "4", which does not require a trial batch, so that the compressive strength achieved for the laboratory trial batches will be no less than 125 percent of the specified design strength. This is to assure meeting the design strength for all concrete batched during the project.
3. The quantity of water to be used in the determination of the water-cementitious materials ratio shall include free water on aggregates in excess of SSD and the water portion of admixtures.
4. Allowable tolerance for air content at the point of delivery is +/- 1.5 percent.

B. Use an independent testing facility acceptable to ENGINEER for preparing and reporting proposed mix designs.
   1. The testing facility shall not be the same as used for field quality control testing.

C. Submit written reports of laboratory trial batch test results for proposed mixes of concrete to ENGINEER at least 15 days prior to start of Work. Do not begin concrete production until mixes have been approved by ENGINEER.

D. Adjustment to Concrete Mixes: Mix design adjustments may be requested by CONTRACTOR when characteristics of materials, job conditions, weather, test

results, or other circumstances warrant; at no additional cost to the OWNER and as accepted by ENGINEER. Laboratory test data for revised mix designs and strength results must be submitted to and accepted by ENGINEER before using the revised mixes.

E. Admixtures:
1. Use air-entraining admixture in all concrete, unless otherwise shown or specified. Add air-entraining admixture at the manufacturer's prescribed rate to result in concrete at the point of placement having air content within the prescribed limits.
2. Use amounts of admixtures as recommended by the manufacturer for climatic conditions prevailing at the time of placing. Adjust quantities and types of admixtures as required to maintain quality control.

F. Slump Limits with High Range Water Reducer:
1. Slump shall not exceed 4-inches prior to adding high range water-reducer and shall not exceed 8 inches, measured at point of placement, after adding high range water reducer.

G. Synthetic Macrofibers:
1. Dosage:
   a. All concrete members:
      1) Fiber dosage shall provide a minimum fiber required residual strength (fe3) value, as follows, in accordance with ASTM C1609:
         a) 10 IN thick element: fe3 = 170 PSI
         b) Over 10 IN thick element: fe3 = 150 PSI
      2) Under no circumstance shall dosage be less than 3 LBS per cubic yard
   b. Final dosage rates to be determined by Contractor and concrete supplier as required to meet the specified minimum average residual strength.
2. Provide synthetic macrofibers in the following concrete members:
   a. Mat foundations of water bearing structures
   b. Walls of water bearing structures
   c. Elevated concrete slabs and beams of water bearing structures
   d. Other locations as specified on the Drawings
3. Uniformly disperse in concrete mixtures.

H. Shrinkage Limitation:
1. The maximum concrete shrinkage for specimens cast in the laboratory from the trial batch, as measured at 28-day drying age shall be 0.032 percent. Only use a mix design for construction that has first met the trial batch shrinkage requirements. Shrinkage limitations apply only to Type “1” concrete.

I. Color: Provide colored concrete where shown on the Drawings and specified. Incorporate pigments into the concrete mix according to manufacturer's written instructions. Match sample color approved by ENGINEER.

2.7 BONDING AGENT

A. Provide epoxy and epoxy-cement bonding agents as specified in Section 03251, Concrete Joints.

2.8 CONCRETE CURING MATERIALS

A. Absorptive Cover: Burlap cloth made from jute or kenaf, weighing approximately 10 ounces per square yard and complying with AASHTO M 182, Class 3.

B. Curing Mats: Curing mats shall be heavy carpets or cotton mats, quilted at 4-inches on center. Curing mats shall weigh a minimum of 12 ounces per square yard when dry.

C. Moisture Retaining Cover: One of the following, complying with ASTM C 171.
   1. Waterproof paper.
   2. Polyethylene film.
   3. White burlap-polyethylene sheet.

D. Curing Compound: ASTM C 309 Type 1-D (water retention requirements):
   1. Product and Manufacturer: Provide one of the following:
      a. Super Aqua Cure VOX, as manufactured by The Euclid Chemical Company.
      b. 1100 Clear, as manufactured by W.R. Meadows, Incorporated.
      c. Atlas Res-Cure, as manufactured by Atlas Tech Products.
      d. Or equal.
   2. Provide fugitive dye.
   3. Curing compound must be applied by roller or power sprayer.

2.9 FINISHING AIDS

A. Evaporation Retardant:
   1. Product and Manufacturer: Provide one of the following:
      a. Confilm, as manufactured by BASF.
      b. Eucobar, as manufactured by Euclid Chemical Company.
      c. SikaFilm by Sika Corporation.
      d. Or equal.

2.10 CONCRETE REPAIR MATERIALS

A. Concrete repair mortar shall be a prepackaged polymer-modified cementitious repair mortar with the following minimum properties:
   1. Compressive strength at one day: 2000 psi (ASTM C 109).
   2. Compressive strength at 28 days: 7000 psi (ASTM C 109).
   3. Bond strength at 28 days: 1800 psi (ASTM C 882 modified).

B. Concrete repair mortar shall be:
   1. Five Star Structural Concrete, manufactured by Five Star Products, Inc. The formulation recommended by the manufacturer for the specific application conditions shall be used.
   2. SikaTop 122 Plus, SikaTop 123 Plus, SikaTop 111 Plus, or Sikacem 133, manufactured by the Sika Corporation. The formulation, among those listed, recommended by the manufacturer for the specific application conditions shall be used.
   3. Emaco S88-CA or S66-CR, manufactured by Master Builders Inc. The formulation, among those listed, recommended by the manufacturer for the specific application conditions shall be used.
   4. Verticoat, Verticoat Supreme, or Euco SR-VO, manufactured by the Euclid Chemical Company. The formulation, among those listed, recommended by the manufacturer for the specific application conditions shall be used.
   5. Or equal.

C. Cement Mortar: Cement mortar shall consist of a mix of one part cement to 1 1/2 parts sand with sufficient water to form a trowelable consistency. Minimum compressive strength at 28 days shall be 4000 psi. Where required to match the color of adjacent concrete surfaces, white portland cement shall be blended with standard portland cement so that, when dry, the patching mortar shall match the color of the surrounding concrete.

PART 3 - EXECUTION

3.1 INSPECTION

A. Examine the substrate and the conditions under which Work is to be performed and notify ENGINEER, in writing, of unsatisfactory conditions. Do not proceed with the Work until unsatisfactory conditions have been corrected in a manner acceptable to ENGINEER.

3.2 CONCRETE MIXING

A. General:
   1. Concrete may be produced at batch plants or it may be produced by the ready-mixed process. Batch plants shall comply with the recommendations of ACI 304, and shall have sufficient capacity to produce concrete of the qualities specified, in quantities required to meet the construction schedule. All plant facilities are subject to testing laboratory inspection and acceptance of ENGINEER.

B. Ready-Mix Concrete:

1. Comply with the requirements of ASTM C 94, and as herein specified. Proposed changes in mixing procedures, other than herein specified, must be accepted by ENGINEER before implementation.
   a. Plant equipment and facilities: Conform to National Ready-Mix Concrete Association "Plant and Delivery Equipment Specification".
   b. Mix concrete in revolving type truck mixers that are in good condition and which produce thoroughly mixed concrete of the specified consistency and strength.
   c. Do not exceed the proper capacity of the mixer.
   d. Mix concrete for a minimum of two minutes after arrival at the job site, or as recommended by the mixer manufacturer.
   e. Do not allow the drum to mix while in transit.
   f. Mix at proper speed until concrete is discharged.
   g. Maintain adequate facilities at the job site for continuous delivery of concrete at the required rates.
   h. Provide access to the mixing plant for ENGINEER at all times.
2. When silica fume is used in the dry compacted form, the following mix requirements shall be followed to ensure full dispersion.
   a. For all types of mixing equipment, mix times shall be increased by 40 percent over the minimum mix time required to achieve mix uniformity as defined by ASTM C 94.
   b. For truck-mixed and central mixed concrete, maximum allowable batch size shall be 80 percent of the maximum in accordance with ASTM C 94.

C. Maintain equipment in proper operating condition, with drums cleaned before charging each batch. Schedule rates of delivery in order to prevent delay of placing the concrete after mixing, or holding dry-mixed materials too long in the mixer before the addition of water and admixtures.

3.3 TRANSPORTING CONCRETE

A. Transport and place concrete not more than 90 minutes after water has been added to the dry ingredients.

B. Take care to avoid spilling and separation of the mixture during transportation.

C. Do not place concrete in which the ingredients have been separated.

D. Do not retemper partially set concrete.

E. Use suitable and approved equipment for transporting concrete from mixer to forms.

3.4 PREPARTION FOR CONCRETING

A. All reinforcement, installation of waterstop and positioning of embedded items shall be inspected and approved by the ENGINEER a minimum of four hours prior to concrete placement.

B. Subgrade surfaces shall be thoroughly wetted by sprinkling, prior to the placing of any concrete, and these surfaces shall be kept moist by frequent sprinkling up to the time of placing concrete thereon. The surface shall be free from standing water, mud, and debris at the time of placing concrete.

C. All reinforcing steel and embedded items shall be completely cleaned of mortar, loose rust, form release compounds, dirt, or any other substance which would interfere with proper bonding with concrete. Protective coatings on embedded aluminum items shall continuously cover the surface to be in contact with concrete. Any defects in the coating shall be repaired.

D. No concrete shall be placed in any structure until all water entering the space to be filled with concrete has been properly cut off or has been diverted by pipes, or other means, and carried out of the forms, clear of the work. No concrete shall be deposited underwater nor shall CONTRACTOR allow still water to rise on any concrete until the concrete has attained its initial set. Water shall not be permitted to flow over the surface of any concrete in such manner and at such velocity as will injure the surface finish of the concrete. Pumping or other necessary dewatering operations for removing ground water, if required, will be subject to the review of the ENGINEER.

E. Joint surfaces shall be prepared as required by Section 03251, Concrete Joints.

3.5 CONCRETE PLACEMENT

A. General: Place concrete continuously so that no concrete will be placed on concrete that has hardened sufficiently to cause the formation of seams or planes of weakness within the section. If a section cannot be placed continuously, provide construction joints as specified in Section 03251, Concrete Joints. Deposit concrete as nearly as practical in its final location to avoid segregation due to rehandling or flowing. Do not subject concrete to any procedure which will cause segregation.
   1. Screed concrete that is to receive other construction to the proper level to avoid excessive skimming or grouting.
   2. Do not use concrete which becomes non-plastic and unworkable, or does not meet the required quality control limits, or which has been contaminated by foreign materials. Do not use retempered concrete. Remove rejected concrete from the job site and dispose of it in an acceptable location.
   3. Do not place concrete until all forms, bracing, reinforcement, and embedded items are in final and secure position.

4. Unless otherwise approved, place concrete only when ENGINEER is present.
5. Allow a minimum of three days before placing concrete against a slab or wall already in place.

B. Bonding for Next Concrete Pour:
1. Prepare for bonding of fresh concrete to new concrete that has set but is not fully cured, as follows:
   a. Thoroughly wet the surface, but allow no free standing water.
   b. For horizontal surfaces place a 2-inch layer of mortar, one part sand and one part cement with water added to a flowable consistency, or a 6-inch layer of Construction Joint Grout, as specified in Section 03600, Grout, over the hardened concrete surface.
   c. Place fresh concrete before the mortar/grout has attained its initial set.
   d. If a high range water reducer is used to increase the concrete slump to at least 6-inches, the mortar/grout layer may be omitted.
2. Bonding of fresh concrete to fully-cured hardened existing concrete shall be accomplished by using a bonding agent as specified in Section 03251, Concrete Joints.

C. Concrete Conveying:
1. Handle concrete from the point of delivery and transfer to the concrete conveying equipment and to the locations of final deposit as rapidly as practical by methods that will prevent segregation and loss of concrete mix materials.
2. Provide mechanical equipment for conveying concrete to ensure a continuous flow of concrete at the delivery end. Provide runways for wheeled concrete conveying equipment from the concrete delivery point to the locations of final deposit. Keep interior surfaces of conveying equipment, including chutes, free of hardened concrete, debris, water, ice and other deleterious materials.
3. Do not use chutes for distributing concrete, unless approved in writing by ENGINEER.
   a. Provide sketches showing methods by which chutes will be employed when requesting such approval.
   b. Design chutes, if permitted, with proper slopes and supports to permit efficient handling of the concrete.
4. Pumping concrete is permitted, however do not use aluminum pipe for conveying.

D. Placing Concrete into Forms:
1. Deposit concrete in forms in horizontal layers not deeper than 18-inches and in a manner to avoid inclined construction joints. Where placement consists of several layers, place concrete at such a rate that concrete that is being integrated with fresh concrete is still plastic.
2. Do not permit concrete to free fall within the form from a distance exceeding four feet. Where high range water reducer is used to extend slump to at least 6-inches, the maximum free fall of concrete may be increased to six feet. If a 12-

inch thick layer of construction joint grout, as specified in Section 03251, Concrete Joints, is placed on the horizontal joint, concrete with slump extended by a high range water reducer may free fall up to eight feet in walls that are 24-inches and thicker. Use "elephant trunks" to prevent free fall and excessive splashing on forms and reinforcement. Free falls in excess of four feet shall be discontinued if there is any evidence of segregation.

3. Remove temporary spreaders in forms when concrete placing has reached the elevation of such spreaders.
4. Consolidate concrete placed in forms by mechanical vibrating equipment supplemented by hand-spading, rodding or tamping. Use equipment and procedures for consolidation of concrete in accordance with the applicable recommended practices of ACI 309. Vibration of forms and reinforcing will not be permitted, unless otherwise accepted by ENGINEER.
5. Where height of concrete placement in walls exceeds 14 feet, temporary windows shall be installed in the formwork to facilitate vibration. The windows shall be properly closed when the height of concrete approaches the windows. Location, size, and spacing of the windows shall be determined by CONTRACTOR to suit equipment used.
6. Do not use vibrators to transport concrete inside of forms. Insert and withdraw vibrators vertically at uniformly spaced locations not farther than the visible effectiveness of the machine. Place vibrators to rapidly penetrate the layer of concrete and at least 6-inches into the preceding layer. Do not insert vibrators into lower layers of concrete that have begun to set. At each insertion, limit the duration of vibration to the time necessary to consolidate the concrete and complete embedment of reinforcement and other embedded items without causing segregation of the mix.
7. Do not place concrete in beam and slab forms until the concrete previously placed in columns and walls is no longer plastic.
8. Force concrete under pipes, sleeves, openings and inserts from one side until visible from the other side to prevent voids.

E. Placing Concrete Slabs:
1. Deposit and consolidate concrete slabs in a continuous operation, within the limits of construction joints, until the placing of a panel or section is completed.
2. Consolidate concrete during placing operations using mechanical vibrating equipment, so that concrete is thoroughly worked around reinforcement and other embedded items and into corners.
3. Consolidate concrete placed in beams and girders of supported slabs, and against bulkheads of slabs on ground, as specified for formed concrete structures.
4. Bring slab surfaces to the correct level. Smooth the surface, leaving it free of humps or hollows. Do not sprinkle water on the plastic surface. Do not disturb the slab surfaces prior to beginning finishing operations.
5. Where slabs are placed in conditions of high temperature or wind that could lead to formation of plastic shrinkage cracks, an evaporation retardant shall be

applied in accordance with the manufacturer's recommendations, when required by the ENGINEER.

F. Quality of Concrete Work:
1. Make all concrete solid, compact and smooth, and free of laitance, cracks and cold joints.
2. All concrete for liquid retaining structures, and all concrete in contact with earth, water, or exposed directly to the elements shall be watertight.
3. Cut out and properly replace to the extent directed by ENGINEER, or repair to the satisfaction of ENGINEER, surfaces which contain cracks or voids, are unduly rough, or are in any way defective. Thin patches or plastering shall not be acceptable.
4. All leaks through concrete that exhibit any flowing water, and cracks, holes or other defective concrete in areas of potential leakage, shall be repaired and made watertight by CONTRACTOR.
5. Repair, removal, and replacement of defective concrete as directed by ENGINEER shall be at no additional cost to the OWNER.

G. Cold Weather Placing:
1. Protect all concrete Work from physical damage or reduced strength that could be caused by frost, freezing actions, or low temperatures, in compliance with the requirements of ACI 306 and as herein specified.
2. When the air temperature has fallen to or may be expected to fall below 40°F, provide adequate means to maintain the temperature, in the area where concrete is being placed, at between 50°F and 70°F for at least seven days after placing. Provide temporary housings or coverings including tarpaulins or plastic film. Maintain the heat and protection, if necessary, to ensure that the ambient temperature does not fall more than 30°F in the 24 hours following the seven-day period. Avoid rapid dry-out of concrete due to overheating, and avoid thermal shock due to sudden cooling or heating.
3. When air temperature has fallen to or is expected to fall below 40°F, uniformly heat all water and aggregates before mixing as required to obtain a concrete mixture temperature of not less than 55°F and not more than 85°F at point of placement.
4. Do not use salt and other materials containing antifreeze agents or chemical accelerators, or set-control admixtures, unless approved by ENGINEER, in mix designs.

H. Hot Weather Placing:
1. When hot weather conditions exist that would seriously impair the quality and strength of concrete, place concrete in compliance with ACI 305 and as herein specified.
2. When ambient air temperature is at or above 90°F, cool ingredients before mixing to maintain concrete temperature at time of placement below 80°F when the air temperature is rising and below 85°F when the air temperature is falling.

Mixing water may be chilled, or chopped ice may be used to control the concrete temperature provided the water equivalent of the ice is calculated in the total amount of mixing water. In addition, the reduction in time from addition of mix water to placement or the use of a set retarding admixture may be required.

3. Cover reinforcing steel with water-soaked burlap if it becomes too hot, so that the steel temperature will not exceed the ambient air temperature immediately before embedment in concrete.
4. Wet forms thoroughly before placing concrete.
5. Do not place concrete at a temperature so as to cause difficulty from loss of slump, flash set, or cold joints.
6. Do not use set-control admixtures, unless approved by ENGINEER in mix designs.
7. Obtain ENGINEER'S approval of other methods and materials proposed for use.

3.6 FINISH OF FORMED SURFACES

A. Standard Form Finish:
   1. Standard form finish shall be basically smooth and even but shall be permitted to have texture imparted by the form material used. Defects shall be repaired as specified herein.
   2. Use standard form finish for the following:
      a. Exterior vertical surfaces from the foundation up to one foot below grade.
      b. Vertical surfaces not exposed to view.
      c. Other areas shown.

B. Smooth Form Finish:
   1. Produce smooth form finish by selecting form materials that will impart a smooth, hard, uniform texture. Arrange panels in an orderly and symmetrical manner with a minimum of seams. Repair and patch defective areas as specified herein.
   2. Use smooth form finish for the following:
      a. Exterior surfaces that are exposed to view.
      b. Surfaces that are to be covered with a coating material. The material may be applied directly to the concrete or may be a covering bonded to the concrete such as waterproofing, dampproofing, painting or other similar system.
      c. Interior vertical surfaces of liquid containers.
      d. Interior and exterior exposed beams and undersides of slabs.
      e. Surfaces to receive an abrasive blasted finish.
      f. Surfaces to receive a smooth rubbed or grout cleaned finish.
      g. Other areas shown.

C. Smooth Rubbed Finish:

1. Provide smooth, Class A, rubbed finish to concrete surfaces, which have received smooth form finish and where all defects have been repaired, as follows:
   a. Rubbing of concrete surfaces not later than the day after form removal.
   b. Moistening of concrete surfaces and rubbing with carborundum brick or other abrasive until a uniform color and texture is produced. Do not apply cement grout other than that created by the rubbing process.
2. Except where surfaces have been previously covered as specified above, use smooth, Class A, rubbed finish for the following:
   a. Interior exposed walls and other vertical surfaces.
   b. Exterior exposed walls and other vertical surfaces down to one foot below grade.
   c. Interior and exterior horizontal surfaces, except exterior exposed slabs and steps.
   d. Interior exposed vertical surfaces of liquid containers down to one foot below liquid level.
   e. Other areas shown on the Drawings.

D. Grout Cleaned Finish:
1. Provide grout cleaned finish to concrete surfaces, which have received smooth form finish and where all defects have been repaired, as follows:
   a. Combine one part portland cement to 1-1/2 parts fine sand by volume, and mix with water to the consistency of thick paint. Blend standard portland cement and white portland cement, amounts determined by trial patches, so that the final color of dry grout will closely match adjacent concrete surfaces.
   b. Thoroughly wet the concrete surface and apply grout uniformly by brushing or spraying immediately to the wetted surfaces. Scrub surface with cork float or stone to coat surface and fill surface holes. Remove excess grout by scraping, followed by rubbing with clean burlap to remove any visible grout film. Keep grout damp during the setting period by means of fog spray at least 36 hours after final rubbing. Complete any area in the same day it is started, with the limits of any area being natural breaks in the finished surface.
2. Except where surfaces have been previously covered as specified above, use grout cleaned finish for the following:
   a. Interior exposed walls and other vertical surfaces.
   b. Exterior exposed walls and other vertical surfaces down to one foot below grade.
   c. Interior and exterior horizontal surfaces, except exterior exposed slabs and steps.
   d. Interior exposed vertical surfaces of liquid containers down to one foot below liquid level.
   e. Other areas shown on the Drawings.

E. Abrasive Blasted Finish:
   1. Provide abrasive blasted finish where shown.
   2. Where abrasive blasted finish is indicated, it shall be applied to a smooth formed finish after the end of the curing period, with all defects repaired, to match the approved finish provided on the mock-up panel.
   3. Heavy Abrasive Blasted Finish: Abrasive blast to uniformly expose coarse aggregate.
   4. Light Abrasive Blasted Finish: Abrasive blast to uniformly expose fine aggregate.

F. Related Unformed Surfaces:
   1. At tops of walls, horizontal offsets, and similar unformed surfaces occurring adjacent to formed surfaces, strike off smooth and finish with a texture matching the adjacent formed surfaces. Continue the final surface treatment of formed surfaces uniformly across the adjacent unformed surfaces, unless otherwise shown.

3.7 SLAB FINISHES

A. Float Finish:
   1. After placing concrete slabs, do not work the surface further until ready for floating. Begin floating when the surface water has disappeared or when the concrete has stiffened sufficiently. Check and level the surface plane to a tolerance not exceeding 1/4-inch in ten feet when tested with a ten foot straightedge placed on the surface at not less than two different angles. Cut down high spots and fill all low spots. Uniformly slope surfaces to drains. Immediately after leveling, refloat the surface to a uniform, smooth, granular texture.
   2. Use float finish for the following:
      a. Interior exposed horizontal surfaces of liquid containers, except those to receive grout topping.
      b. Exterior below grade horizontal surfaces.
      c. Surfaces to receive additional finishes, except as shown or specified.

B. Trowel Finish:
   1. After floating, begin the first trowel finish operation using a power-driven trowel. Begin final troweling when the surface produces a ringing sound as the trowel is moved over the surface.
   2. Consolidate the concrete surface by the final hand troweling operation. Finish shall be free of trowel marks, uniform in texture and appearance, and with a surface plane tolerance not exceeding 1/8-inch in ten feet when tested with a ten foot straight edge. Grind smooth surface defects that would telegraph through applied floor covering system.
   3. Use trowel finish for the following:
      a. Interior exposed slabs, unless otherwise shown or specified.

b. Slabs to receive resilient floor finishes.

C. Non-Slip Broom Finish:
1. Immediately after float finishing, slightly roughen the concrete surface by brooming in the direction perpendicular to the main traffic route. Use fine fiber-bristle broom, unless otherwise directed by the ENGINEER. Coordinate the required final finish with ENGINEER before application.
2. Use Non-Slip Broom Finish for the following:
   a. Exterior exposed horizontal surfaces subject to light foot traffic.
   b. Interior and exterior concrete steps and ramps.
   c. Horizontal surfaces which will receive a grout topping or a concrete equipment base slab.

3.8 CONCRETE CURING AND PROTECTION

A. General:
1. Protect freshly placed concrete from premature drying and excessive cold or hot temperature, and maintain without drying at a relatively constant temperature for the period of time necessary for hydration of the cement and proper hardening of the concrete.
2. Start initial curing after placing and finishing concrete as soon as free moisture has disappeared from the concrete surface. Keep continuously moist for not less than 72 hours.
3. Begin final curing procedures immediately following initial curing and before the concrete has dried. Continue final curing for at least seven days and in accordance with ACI 301 procedures for a total curing period, initial plus final, of at least ten days. For concrete sections over 30-inches thick, continue final curing for an additional seven days, minimum. Avoid rapid drying at the end of the final curing period.

B. Curing Methods:
1. Water retaining and below grade structures shall be moist cured by the addition of water to maintain the surface in a continually wet condition. Other concrete shall be cured by moist curing, by moisture retaining cover curing, or by the use of curing compound. Use curing compound at water retaining and below grade structures only in cold weather and only when permitted by ENGINEER.
   a. For curing, use water that is free of impurities that could etch or discolor exposed, natural concrete surfaces.
2. Provide moisture curing by any of the following methods:
   a. Keeping the surface of the concrete continuously wet by covering with water.
   b. Continuous water-fog spray.
   c. Covering the concrete surface with curing mats, thoroughly saturating the mats with water, and keeping the mats continuously wet with sprinklers or porous hoses. Place curing mats so as to provide coverage of the concrete

surfaces and edges, with a 4-inch lap over adjacent mats. If necessary, the curing cover shall be weighted to maintain contact with the concrete surface.

d. At the end of the curing period apply one coat of curing compound, unless concrete surface is to receive a topping or coating or application is waived by the ENGINEER.

3. Provide moisture retaining cover curing as follows:
   a. Cover the concrete surfaces with the specified moisture retaining cover for curing concrete, placed in the widest practical width with sides and ends lapped at least 3-inches and sealed by waterproof tape or adhesive. Immediately repair any holes or tears during the curing period using cover material and waterproof tape.
4. Provide liquid curing compound as follows:
   a. Apply the specified curing compound to all concrete surfaces when permitted by ENGINEER. Slabs to receive terrazzo floors, chemical resistant heavy duty concrete topping or ceramic tile, shall not be cured with liquid curing compound, but shall be moisture cured. The compounds shall be applied immediately after final finishing in a continuous operation by power spray equipment in accordance with the manufacturer's directions. Recoat areas that are subjected to heavy rainfall within three hours after initial application. Maintain the continuity of the coating and repair damage to the coat during the entire curing period. For concrete surfaces that will be in contact with potable water, the manufacturer shall certify that the curing compound meets the requirements of ANSI/NSF 61.
   b. When curing compound is authorized for application to water retaining or below grade members, it shall be applied at the manufacturer's recommended coverage rate and then applied again at the same rate to provide twice the recommended coverage.
   c. At the end of the curing period, curing compound shall be removed where required by the ENGINEER.

C. Curing Formed Surfaces:
   1. Cure formed concrete surfaces; including the undersides of girders, beams, supported slabs and other similar surfaces by moist curing with the forms in place unloosened for the full curing period or until forms are removed. Where wood forms are kept in place, water shall be added to keep the forms wet. If forms are removed, continue curing by methods specified above, as applicable.

D. Curing Unformed Surfaces:
   1. Initially cure unformed surfaces, such as slabs, floor topping, and other flat surfaces by using the appropriate method specified above.
   2. Final cure unformed surfaces, unless otherwise specified, by utilizing methods specified above, as applicable.

E. Temperature of Concrete During Curing:

1. When the atmospheric temperature is 40°F and below, maintain the concrete temperature between 50°F and 70°F continuously throughout the curing period. When necessary, make arrangement before concrete placing for heating, covering, insulation or housing as required to maintain the specified temperature and moisture conditions continuously for the concrete curing period. Provide cold weather protection complying with the requirements of ACI 306.
2. When the atmospheric temperature is 80°F and above, or during other climatic conditions which will cause too rapid drying of the concrete, make arrangements before the start of concrete placing for the installation of wind breaks or shading, and for fog spraying, wet sprinkling, or moisture retaining covering. Protect the concrete continuously for the concrete curing period. Provide hot weather protection complying with the requirements of ACI 305, unless otherwise specified.
3. Maintain concrete temperature as uniformly as possible, and protect from rapid atmospheric temperature changes. Avoid temperature changes in concrete which exceed 5°F in any one hour and 50°F in any 24 hour period.

F. Protection from Mechanical Injury:
1. During the curing period, protect concrete from damaging mechanical disturbances including load stresses, heavy shock, excessive vibration, and from damage caused by rain or flowing water. Protect all finished concrete surfaces from damage by subsequent construction operations.

3.9 FIELD QUALITY CONTROL

A. The OWNER shall employ a testing laboratory to perform field quality control testing. ENGINEER will direct the number of tests and cylinders required. Make standard compression test cylinders and entrained air tests as specified below, under the direct inspection by ENGINEER. Also, provide all labor, material and equipment required including, scale, glass tray, cones, rods, molds, air tester, thermometer, curing in a heated storage box, and all other incidentals required. Above will be subject to approval by ENGINEER. Furnish all necessary storage and curing, and transportation required by the testing.

B. Quality Control Testing During Construction:
1. Perform sampling and testing for field quality control during the placement of concrete, as follows:
   a. Sampling Fresh Concrete: ASTM C 172.
   b. Slump: ASTM C 143; one test for each concrete load at point of discharge; and one for each set of compressive strength test specimens.
   c. Air Content: ASTM C 231; one for every other concrete load at point of discharge, or when required by an indication of change.
   d. Compressive Strength Tests: ASTM C 39; one set of compression cylinders for each 50 cubic yards or fraction thereof, of each mix design

placed in any one day; one specimen tested at seven days, and three specimens tested at 28 days.

1) Adjust mix if test results are unsatisfactory and resubmit for ENGINEER'S approval.
2) Concrete that does not meet the strength requirements is subject to rejection and removal from the Work, or to other such corrective measures as directed by ENGINEER, at the expense of CONTRACTOR.

e. Compression Test Specimens: ASTM C 31; make one set of four standard cylinders for each compressive strength test, unless otherwise directed.
   1) Cast, store and cure specimens as specified in ASTM C 31.

f. Water Cementitious Materials Ratio: Perform one test from each sample from which compression test specimens are taken in accordance with AASHTO TP 23.

g. Concrete Temperature: Test hourly when air temperature is 40°F and below, and when 80°F and above; and each time a set of compression test specimens is made.

2. The testing laboratory shall submit certified copies of test results directly to ENGINEER and CONTRACTOR within 24 hours after tests are made.

C. Evaluation of Quality Control Tests:

1. Do not use concrete delivered to the final point of placement, which has slump or total air content outside the specified values.
2. When water content testing indicates water-cementitious materials ratio to exceed specified requirements by more than 0.02, remaining batches needed to complete the concrete placement shall have water content decreased in the mix and water reducing admixture dosage increased as needed to bring the subsequently batched concrete within the specified water-cementitious materials ratio. Additional testing shall be done to verify compliance with the specified water-cementitious materials ratio. Concrete production for further concrete placements shall not resume until CONTRACTOR has identified the cause of the excess water in the mix and revised batching procedures and/or adjustments to mix design needed to bring water-cementitious materials ratio into conformance with specified requirements have been accepted by ENGINEER.
3. Compressive strength tests for laboratory-cured cylinders will be considered satisfactory if the averages of all sets of three consecutive compressive strength tests results equal or exceed the 28 day design compressive strength of the type or class of concrete; and, no individual strength test falls below the required compressive strength by more than 500 psi.
   a. Where questionable field conditions may exist during placing concrete or immediately thereafter, strength tests of specimens cured under field conditions will be required by ENGINEER to check the adequacy of curing and protecting of the concrete placed. Specimens shall be molded at the same time and from the same samples as the laboratory cured specimens.

1) Provide improved means and procedures for protecting concrete when the 28 day compressive strength of field-cured cylinders is less than 85 percent of companion laboratory-cured cylinders.
2) When laboratory-cured cylinder strengths are appreciably higher than the minimum required compressive strength, field-cured cylinder strengths need not exceed the minimum required compressive strength by more than 500 psi even though the 85 percent criterion is not met.
3) If individual tests of laboratory-cured specimens produce strengths more than 500 psi below the required minimum compressive strength, or if tests of field-cured cylinders indicate deficiencies in protection and curing, provide additional measures to assure that the load-bearing capacity of the structure is not jeopardized. If the likelihood of low-strength concrete is confirmed and computations indicate the load-bearing capacity may have been significantly reduced, tests of cores drilled from the area in question will be required at CONTRACTOR'S expense.

b. If the compressive strength tests fail to meet the minimum requirements specified, the concrete represented by such tests will be considered deficient in strength and subject to replacement, reconstruction or to other action approved by ENGINEER.

D. Testing Concrete Structure for Strength:
1. When there is evidence that the strength of the in-place concrete does not meet specification requirements, employ at CONTRACTOR’S expense the services of a concrete testing service to take cores drilled from hardened concrete for compressive strength determination. Tests shall comply with the requirements of ASTM C 42 and the following:
   a. Take at least three representative cores from each member or suspect area at locations directed by ENGINEER.
   b. Strength of concrete for each series of cores will be considered satisfactory if their average compressive strength is at least 85 percent and no single core is less than 75 percent of the 28 day required compressive strength.
   c. Report test results to ENGINEER, in writing, on the same day that tests are made. Include in test reports, the Project identification name and number, date, name of CONTRACTOR, name of concrete testing service, location of test core in the structure, type or class of concrete represented by core sample, nominal maximum size aggregate, design compressive strength, compression breaking strength and type of break (corrected for length-diameter ratio), direction of applied load to core with respect to horizontal plane of the concrete as placed, and the moisture condition of the core at time of testing.
2. Fill core holes solid with non-shrink, high strength grout, and finish to match adjacent concrete surfaces.

3. Conduct static load test and evaluations complying with the requirements of ACI 318 if the results of the core tests are unsatisfactory, or if core tests are impractical to obtain, as directed by ENGINEER.

3.10 MISCELLANEOUS CONCRETE ITEMS

A. Temporary Openings
1. Openings in concrete walls and/or slabs required for passage of Work or installation of equipment and not shown on the Drawings shall be provided, but only with approval of the ENGINEER.
2. All temporary openings made in concrete shall be provided with waterstop in below grade or water retaining members. Continuity of required reinforcement shall be provided in a manner acceptable to the ENGINEER.
3. Temporary openings left in concrete structures shall be filled with concrete after the Work causing the need for the opening is in place, unless otherwise shown or directed. Mix, place and cure concrete as specified herein, to blend with in-place construction. Provide all other miscellaneous concrete filling shown or required to complete the Work.

B. Equipment Bases:
1. Unless specifically shown otherwise, provide concrete bases for all pumps and other equipment. Coordinate and construct bases to the dimensions shown, or as required to meet manufacturers; requirements and Drawing elevations. Where no specific elevations are shown, bases shall be 6-inches thick and extend 3-inches outside the metal equipment base or supports. Bases shall have smooth trowel finish, unless a special finish such as terrazzo, ceramic tile or heavy duty concrete topping is required. In those cases, provide appropriate concrete finish.
2. Include all concrete equipment base work not specifically included under other Sections.
3. In general, place bases up to 1-inch below the metal base. Properly shim equipment to grade and fill 1-inch void with non-shrink grout as specified in Section 03600, Grout.

C. Curbs:
1. Provide monolithic finish to interior curbs by stripping forms while concrete is still green and steel-troweling surfaces to a hard, dense finish with corners, intersections, and terminations slightly rounded.
2. Exterior curbs shall have rubbed finish for vertical surfaces and a broomed finish for top surfaces.

3.11 CONCRETE REPAIRS

A. Repair of Formed Surfaces:
1. The following defects shall be repaired in all types of formed finishes:

a. Spalls, air bubbles, rock pockets, form depressions, and other defects that are more than 1/4-inch in depth.
b. Holes from tie rods and other form tie systems.
c. Fins, offsets and other projections that extend more than 1/4-inch beyond the designated member surface.
d. Structural cracks, as defined by the ENGINEER.
e. Non-structural cracks, as defined by the ENGINEER, which are greater than 0.010-inch wide. In water retaining members, elevated slabs subject to rainfall and washdown, and below grade members, any crack that shows any amount of leakage. Where it is not possible to verify that a crack is not leaking, it shall be repaired.

2. The following defects shall be repaired in smooth finish surfaces, in addition to those listed above:
   a. Spalls, air bubbles, rock pockets, form depressions, and other defects which extend to more than 1/2-inch in width in any direction, no matter how deep.
   b. Spalls, air bubbles, rock pockets, form depressions, and other defects of any size that exceed three in number in a 12-inch square or 12 in number in a three foot square.
   c. Fins, offsets and other projections shall be completely removed and smoothed.
   d. Scratches and gouges in the surface.
   e. Texture and color irregularities. At water retaining surfaces, texture and color irregularities need not be repaired when greater than 12-inches below the minimum normal operating water surface, except where such defects are indicative of reduced durability.
3. Where a smooth rubbed or grout cleaned finish is specified, minor surface defects repairable by the finishing process need not be repaired prior to the finish application, when approved by the ENGINEER.

B. Method of Repair of Formed Surfaces:
1. Repair and patch defective areas with cement mortar or concrete repair mortar immediately after removal of forms and as directed by ENGINEER. Repairs made to water bearing and buried surfaces shall be made with repair mortar only. Repairs of form tie holes on water bearing or buried surfaces shall be made with non-shrink grout as specified in Section 03600, Grout.
2. Cut out honeycomb, rock pockets, voids, and holes left by tie rods and bolts, down to solid concrete but, in no case, to a depth of less than 1-inch for cement mortar and 1/2-inch for repair mortar. Make edges of cuts perpendicular to the concrete surface. Before placing the cement mortar, thoroughly clean and brush-coat the area to be patched with the specified bonding agent. Where concrete repair mortar is used, bonding agent shall be optional and the surface prepared and mortar placed per manufacturers recommendations.
   a. Repairs at exposed-to-view surfaces shall match the color of surrounding concrete, except color matching is not required for the interior surfaces of liquid containers up to one foot below liquid level. Impart texture to

repaired surfaces to match texture of existing adjacent surfaces. Provide test areas at inconspicuous locations to verify mixture, texture and color match before proceeding with the patching. Compact mortar in place and strike off slightly higher than the surrounding surface.

3. Structural cracks shall be pressure grouted using an injectable epoxy using a pumped pressure system. Apply in accordance with the manufacturer's directions and recommendations.
4. Non-structural cracks shall be pressure grouted using hydrophilic resin. Apply in accordance with the manufacturer's directions and recommendations.
5. Determination of the crack type shall be made by the ENGINEER.
6. Fill holes extending through concrete by means of a plunger- type gun or other suitable device from the least exposed face, using a flush stop held at the exposed face to ensure completely filling. At below grade and water retaining members, fill holes with concrete repair mortar except use a color matched cement mortar for the outer 2-inches at exposed to view surfaces.
7. Where powerwashing and/or scrubbing is not adequate, abrasive blast exposed-to-view surfaces that require removal of stains, grout accumulations, sealing compounds, and other substances marring the surfaces. Use sand finer than No. 30 and air pressure from 15 to 25 psi.

C. Repair of Unformed Surfaces:
1. Test unformed surfaces, such as monolithic slabs, for smoothness and to verify surface plane to the tolerances specified for each surface and finish. Correct low and high areas as herein specified.
2. Test unformed surfaces sloped to drain for trueness of slope, in addition to smoothness, using a template having the required slope. Correct high and low areas as herein specified.
3. Repair finish of unformed surfaces that contain defects that adversely affect the durability of the concrete. Surface defects include crazing, cracks in excess of 0.01-inch wide, spalling, popouts, honeycomb, rock pockets, and other objectionable conditions.
4. Repair structural cracks in all structures and non-structural cracks in water-holding structures. In water-holding structures, where the dry face of the concrete member can be observed, cracks that show any rate of water flow shall be repaired. Where the dry face of the member cannot be observed, all cracks shall be repaired.

D. Methods of Repair of Unformed Surfaces:
1. Correct high areas in unformed surfaces by grinding, after the concrete has cured sufficiently so that repairs can be made without damage to adjacent areas.
2. Correct low areas in unformed surfaces during, or immediately after completion of surface finishing operations by cutting out the low areas and replacing with fresh concrete. Finish repaired areas to blend into adjacent concrete. Where the concrete has already set and repairs are required, sawcut around the perimeter of the area to be repaired to a 1/2-inch depth and remove concrete so that the

minimum thickness of the repair is 1/2-inch. Apply specified concrete repair mortar in accordance with the manufacturer's directions and recommendations.

3. Repair defective areas, except random cracks and single holes not exceeding 1-inch diameter, by cutting out and replacing with fresh concrete. Remove defective areas to sound concrete with clean, square cuts, and expose reinforcing steel with at least 3/4-inch clearance all around. The minimum thickness of the repair shall be 1.5-inches. Dampen all concrete surfaces in contact with patching concrete and brush with the specified bonding agent. Place patching concrete while the bonding agent is still tacky. Mix patching concrete of the same materials and proportions to provide concrete of the same classification as the original adjacent concrete. Place, compact and finish as required to blend with adjacent finished concrete. Cure in the same manner as adjacent concrete.
4. Repair isolated random non-structural cracks (in members which are not below grade or water retaining), and single holes not over 1-inch diameter, by the dry-pack method. Groove the top of cracks, and cut out holes to sound concrete and clean of dust, dirt and loose particles. Dampen all cleaned concrete surfaces and brush with the specified bonding agent. Place dry-pack before the cement grout takes its initial set. Mix dry-pack, consisting of one part portland cement to 2-1/2 parts fine aggregate passing a No. 16 mesh sieve, using only enough water as required for handling and placing. Compact dry-pack mixture in place and finish to match adjacent concrete. Keep patched areas continuously moist for not less than 72 hours.
5. Structural cracks shall be pressure grouted using an injectable epoxy. Apply in accordance with the manufacturer's directions and recommendations.
6. Non-structural cracks in below grade and water retaining structures shall be pressure grouted using hydrophilic resin. Apply in accordance with the manufacturer's directions and recommendations.
7. Determination of the crack type shall be made by the ENGINEER.
8. Assure that surface is acceptable for flooring material to be installed in accordance with manufacturer's recommendations.

E. Other Methods of Repair:
   1. Repair methods not specified above may be used if approved by ENGINEER.

++ END OF SECTION ++

SECTION 03600

GROUT

PART 1 - GENERAL

1.1 DESCRIPTION

A. Scope:
   1. Provide all labor, materials, equipment, and incidentals as shown, specified and required to furnish and install grout.
   2. Section includes:
      a. Requirements for the grouts, except masonry grouts, referenced on the Contract Drawings and in other Specification Sections.
      b. Types of grouts and their applications. Unless indicated otherwise, provide grouts as listed in this Section whether called for on the Drawings or not.

1.2 QUALITY ASSURANCE

A. Reference Standards: Comply with applicable provisions and recommendations of the following, except as otherwise shown or specified.
   1. ACI 211.1, Practice for Selecting Proportions for Normal, Heavy-Weight and Mass Concrete.
   2. ACI 301, Specification for Structural Concrete (Includes ASTM Standards referred to herein).
   3. ASTM C 33, Specification for Concrete Aggregates.
   4. ASTM C 109, Test Method for Compressive Strength of Hydraulic Cement Mortars (using 2-in. or 50 mm. Cube Specimens).
   5. ASTM C 150, Specification for Portland Cement.
   6. ASTM C 230, Specification for Flow Table for use in Tests of Hydraulic Cement.
   7. ASTM C 531, Test Method for Linear Shrinkage and Coefficient of Thermal Expansion of Chemical- Resistant Mortars, Grouts, and Monolithic Surfacings.
   8. ASTM C 579, Test Method for Compressive Strength of Chemical-Resistant Mortars, Grouts, Monolithic Surfacings and Polymer Concretes.
   9. ASTM C 827, Test Method for Early Volume Change of Cementitious Mixtures.
   10. ASTM C 882, Test Method for Bond Strength of Epoxy-Resin Systems Used with Concrete.
   11. ASTM C 937, Specification for Grout Fluidifier for Preplaced-Aggregate Concrete.
   12. ASTM C 939, Test Method for Flow of Grout for Preplaced-Aggregate Concrete (Flow Cone Method).

13. ASTM C 942, Standard Test Method for Compressive Strength of Grouts for Preplaced-Aggregate Concrete in the Laboratory.
14. ASTM C 1107, Specification for Packaged Dry, Hydraulic-Cement Grout (Non-shrink).
15. ASTM C 1181, Test Method for Compressive Creep of Chemical-Resistant Polymer Machinery Grouts.
16. ASTM D 696, Test Method for Coefficient of Linear Thermal Expansion of Plastics.

B. Field Tests:
1. Compression test specimens will be taken during construction from the first placement of each type of grout, and at intervals thereafter as selected by the ENGINEER to ensure continued compliance with these specifications. The specimens will be made by the ENGINEER or its representative.
2. Compression tests and fabrication of specimens for non-shrink grout will be performed as specified in ASTM C 109 at intervals during construction as selected by the ENGINEER. A set of three specimens will be made for testing at seven days, 28 days, and each additional time period as appropriate.
3. Compression tests and fabrication of specimens for epoxy grout will be performed as specified in ASTM C 579, Method B, at intervals during construction as selected by the ENGINEER. A set of three specimens will be made for testing at seven days, and each earlier time period as appropriate.
4. The cost of all laboratory tests on grout will be borne by the OWNER, but CONTRACTOR provide assistance to the ENGINEER in obtaining specimens for testing. However, the cost of any additional tests and investigation on work performed which does not conform to the requirements of the specifications belongs to CONTRACTOR. Supply all materials necessary for fabricating the test specimens.

1.3 SUBMITTALS

A. Shop Drawings: Submit for approval the following:
1. Refer to and comply with the requirements of Section 01332, Shop Drawing Procedures.
2. For Grout Fill and Construction Joint Grout, copies of grout design mix and laboratory test reports for grout strength tests.
3. CONTRACTOR shall submit an electronic copy per Specification Section 01332, Shop Drawing Procedures.
4. A copy of this specification section, with addendum updates included, and all referenced and applicable sections, with addendum updates included, with each paragraph check-marked to indicate specification compliance or marked to indicate requested deviations from specification requirements. Check marks (✓) shall denote full compliance with a paragraph as a whole. If deviations from the specifications are indicated, and therefore requested by the CONTRACTOR,

each deviation shall be underlined and denoted by a number in the margin to the right of the identified paragraph, referenced to a detailed written explanation of the reasons for requesting the deviation. The ENGINEER shall be the final authority for determining acceptability of requested deviations. The CONTRACTOR shall furnish equipment and/or services as specified if an exception and/or deviation is rejected. The remaining portions of the paragraph not underlined will signify compliance on the part of the CONTRACTOR with the specifications. Failure to include a copy of the marked-up specification sections, along with justification(s) for any requested deviations to the specification requirements, with the submittal shall be sufficient cause for rejection of the entire submittal with no further consideration.

B. Reports and Certificates, submit for approval the following:
   1. For proprietary materials, submit copies of manufacturer's certification of compliance with the specified properties.
   2. Submit certified testing lab reports for ASTM C 1107, Grade B and Grade C (as revised herein) requirements for grouts tested at a fluid consistency for temperatures of 45, 73.4, 90°F with a pot life of 30 minutes at fluid consistency.
   3. Submit certification that materials meet specification requirements for nonproprietary materials.
   4. Submit certifications that all grouts used on the project are free of chlorides or other chemicals causing corrosion.
   5. Manufacturer's specifications and installation instructions for all proprietary materials.

C. Informational Submittals:
   1. Grout placement plan.
   2. Description of proposed curing methods.

1.4 PRODUCT DELIVERY, STORAGE AND HANDLING

A. Delivery of Materials: Grout materials from manufacturers shall be delivered in unopened containers and shall bear intact manufacturer's labels.

B. Storage and Handling of Materials:
   1. Grout materials shall be stored in a dry shelter and shall be protected from moisture.
   2. Store and precondition all grout and grout materials per grout manufacturer requirements. Provide air conditioned storage facility as may be required.
   3. Store grout materials in undamaged condition with seals and labels intact as packaged by the manufacturer.

PART 2 - PRODUCTS

2.1 CEMENT BASED NON-SHRINK GROUTS

A. General:
   1. Non-shrink grout shall be a prepackaged, inorganic, non-gas-liberating, cement-based grout requiring only the addition of water. Manufacturer's instructions shall be printed on each bag or other container in which the materials are packaged. The specific formulation for each type of non-shrink grout specified herein shall be that recommended by the manufacturer for the particular application.
   2. Provide grout that meets the performance requirements of ASTM C 1107.
   3. Use hydraulic cement complying with ASTM C 150, Type I for exposures not in contact with sewage or soils, and Type II (sulfate resistant) for exposures in contact with sewage or soils.
   4. Do not add other materials to the grout with the exception of aggregate only as recommended by the manufacturer.
   5. The non-shrink property must not be based on a chemically generated gas or gypsum expansion.
   6. The grout when tested shall not bleed at maximum allowed water.
   7. Volume change:
      a. The length change from placement to time of final set shall not have a shrinkage greater than the amount of expansion measured at 3 or 14 days. The expansion at 3 or 14 days shall not exceed the 28-day expansion.
      b. Range: 0.0 to 0.3 percent when tested in accordance with ASTM C1090.
   8. Provide Non-Shrink Non-Metallic Grout wherever “non-shrink grout” is referenced on the Drawings, unless noted otherwise.

B. Non-Shrink Metallic Precision Grout:
   1. Application: Use for precision grouting where non-shrink reliability for optimum bearing, high strength, high impact resistance, non-raveling edges, and fluid consistency are required. Not intended for exposures where submerged in water for extended periods of time. Example applications are as follows.
      a. Heavy duty machinery and equipment.
      b. Bearing plates.
      c. Structural base plate or precast concrete bearing for greater than 2 stories.
   2. Aggregate: internally reinforced with metallic aggregate.
   3. Compressive Strength: Tested per ASTM C 109 or ASTM C 942.
      a. Flowable Consistency at 28 days: 9000 psi.
      b. Fluid Consistency at 28 days: 7000 psi.
   4. Consistency: Shall meet the requirements of ASTM C 1107 Grade C and B (as modified below) when tested using the amount of water required to achieve the following properties:
      a. Fluid consistency (20 to 30 seconds) in accordance with ASTM C 939.

b. At temperatures of 45, 73.4, and 95°F.

5. Product and Manufacturer: Provide one of the following:
   a. Embeco 885, as manufactured by BASF Construction Chemicals, LLC.
   b. NS Metallic Grout, as manufactured by the Euclid Chemical Company.
   c. Or equal.

C. Non-Shrink Non-Metallic Precision Grout:
1. Application: Use for precision grouting where positive expansion for optimum bearing, high strength, and fluid consistency are required. Example applications are as follows.
   a. Machinery and equipment.
   b. Bearing plates.
   c. Structural steel or precast concrete bearing.
   d. Anchor bolts and dowels.
   e. Storage tanks and vessels.
2. Aggregate: Provide mineral, non-metallic aggregate.
3. Compressive Strength: Tested per ASTM C 109 or ASTM C 942.
   a. Flowable Consistency at 28 days: 9000 psi.
   b. Fluid Consistency at 28 days: 7000 psi.
4. Consistency: Shall meet the requirements of ASTM C 1107 Grade C and B (as modified below) when tested using the amount of water required to achieve the following properties:
   a. Fluid consistency (20 to 30 seconds) in accordance with ASTM C 939.
   b. At temperatures of 45, 73.4, and 95°F.
5. Acceptable Product and Manufacturer:
   a. Masterflow 928, as manufactured by BASF Construction Chemicals, LLC.
   b. NS Grout, as manufactured by the Euclid Chemical Company.
   c. Five Star High Strength Grout, as manufactured by Five Star Products, Inc.
   d. Or equal.

D. Non-Shrink Non-Metallic Grout:
1. Application: Use for general construction grouting where non-shrink, high strength, and flowable to damp pack consistency are required. Example applications are as follows.
   a. Bedding grout for precast panels.
   b. Base plates.
   c. Low-rise Structural steel or precast concrete bearing.
   d. Anchor bolts and dowels.
   e. Damp pack applications.
   f. Filling blocked out spaces for embedded items such as railing posts, gate guide frames, etc.
2. Aggregate: Provide mineral, non-metallic aggregate.
3. Compressive Strength: Tested per ASTM C 109 or ASTM C 942.
   a. Flowable Consistency at 28 days: 7000 psi.

b. Damp Pack at 28 days: 8000 psi.

4. Consistency: Shall meet the requirements of ASTM C 1107 Grade C and B (as modified below) when tested using the amount of water required to achieve the following properties:
   a. Flowable consistency (125 to 145 percent flow on flow table, ASTM C 230, five drops in 30 seconds.)
   b. Flowable for at least 30 minutes.
5. Product and Manufacturer: Provide one of the following:
   a. Construction Grout, as manufactured by BASF Construction Chemicals, LLC.
   b. Five Star Grout, as manufactured by Five Star Products, Inc.
   c. Dry Pack Grout, as manufactured by the Euclid Chemical Company.
   d. Or equal.

2.2 EPOXY GROUTS

A. Non-Shrink Epoxy Grout:
   1. Application: Use for high performance grouting under conditions of heavy impact, dynamic, and vibratory loading. Example applications are as follows.
      a. High performance machinery grouting,
      b. Reciprocating engines,
      c. Crane rail grouting,
      d. Precision seating and alignment generators, pumps, and electric motors,
      e. Grouted anchors, bars and dowels.
   2. Epoxy grout shall be a pourable, non-shrink, 100 percent solids system. The epoxy grout system shall have three components: resin, hardener, and specially blended aggregate, all premeasured and prepackaged. The resin component shall not contain any non-reactive diluents. Resins containing butyl glycidyl ether (BGE) or other highly volatile and hazardous reactive diluents are not acceptable. Variation of component ratios is not permitted, unless specifically recommended by the manufacturer. Manufacturer's instructions shall be printed on each container in which the materials are packaged. The following properties shall be attained with the minimum quantity of aggregate allowed by the manufacturer.
   3. The vertical volume change at all times before hardening shall be between 0.0 percent shrinkage and 4.0 percent expansion when measured according to ASTM C 827 (modified for epoxy grouts by using an indicator ball with a specific gravity between 0.9 and 1.1). Alternately, epoxy grouts which maintain an effective bearing area of not less than 95 percent are acceptable.
   4. The length change after hardening shall be negligible (less than 0.0006 in/in) and the coefficient of thermal expansion shall be less than 0.00003 in/in/F when tested in accordance to the requirements of ASTM C 531.

5. The compressive creep at one year shall be negligible (less than .001 in/in) when tested under a 400 psi constant load at 140°F in accordance to the requirements of ASTM C 1181.
6. The seven day compressive strength shall be a minimum of 14,000 psi when tested in accordance to the requirements of ASTM C 579.
7. The grout shall be capable of maintaining at least a flowable consistency for a minimum of 30 minutes at 70°F.
8. The shear bond strength to portland cement concrete shall be greater than the shear strength of the concrete when tested in accordance to the requirements of ASTM C 882.
9. The effective bearing area shall be a minimum of 95 percent.
10. Product and Manufacturer: Provide one of the following:
    a. E3-HP, High Performance Epoxy Grout System, as manufactured by The Euclid Chemical Company.
    b. Sikadur 42 Grout Pak, as manufactured by Sika Corporation.
    c. Five Star Epoxy Grout, as manufactured by Five Star Products, Incorporated.
    d. Masterflow 648 CP, as manufactured by BASF Construction Chemicals, LLC.
    e. Or equal.

2.3 CONCRETE GROUTS

A. Grout Fill, Topping Grout:
1. Grout for topping of slabs and concrete fill for built-up surfaces of tank, channel, and basin bottoms shall be composed of cement, fine aggregate, coarse aggregate, water, and admixtures proportioned and mixed as specified herein. All materials and procedures specified for normal concrete in Section 03300, Cast-In-Place Concrete, shall apply except as noted otherwise herein.
2. Topping grout and concrete fill shall contain a minimum of 564 pounds of cement per cubic yard with a maximum water cement ratio of 0.45. Where concrete fill is thicker than 4-inches, Type "1" concrete, as specified in Section 03300, Cast-In-Place Concrete, may be used when accepted by the ENGINEER.
3. Coarse aggregate shall be graded as follows:

U.S. STANDARD SIEVE SIZE	PERCENT BY WEIGHT PASSING
1/2-inch	100
3/8-inch	90-100
No. 4	20-55
No. 8	5-30
No. 16	0-10
No. 30	0

4. Final mix design shall be as determined by trial mix design under supervision of the approved testing laboratory.
5. Strength: Minimum compressive strength of Grout Fill at the end of 28 days shall be 4000 psi.

B. Construction Joint Grout:
1. Construction Joint Grout approximates Type "1" concrete, as specified in Section 03300, Cast-In-Place Concrete, with aggregate coarser than 1/2-inch removed. The mix is to be designed as flowable with a high mortar content. It is intended to be placed over construction joints and mixed with Type "1" concrete as specified in Section 03300, Cast-In-Place Concrete. The mix requirements are as follows:
   a. Compressive Strength: 4,500 psi minimum at 28-days.
   b. Maximum Water-Cement Ratio: 0.45 by weight.
   c. Coarse Aggregate: ASTM C33, No. 8 size.
   d. Fine Aggregate: ASTM C33, approximately 60 percent by weight of total aggregate.
   e. Air Content: 8±1 percent.
   f. Minimum Cement Content: 752 pounds per cubic yard.

C. Requirements for Grout Fill and Construction Joint Grout:
1. Proportion mixes by either laboratory trial batch or field experience methods, using materials to be employed on the Project for grout required. Comply with ACI 211.1 and report to ENGINEER the following data:
   a. Complete identification of aggregate source of supply.
   b. Tests of aggregates for compliance with specified requirements.
   c. Scale weight of each aggregate.
   d. Absorbed water in each aggregate.
   e. Brand, type and composition of cement.
   f. Brand, type and amount of each admixture.
   g. Amounts of water used in trial mixes.
   h. Proportions of each material per cubic yard.
   i. Gross weight and yield per cubic yard of trial mixtures.
   j. Measured slump.
   k. Measured air content.
   l. Compressive strength developed at seven days and 28 days, from not less than three test specimens cast for each seven day and 28-day test, and for each design mix.
2. Submit written reports to ENGINEER of proposed mix of grout at least 30 days prior to start of Work. Do not begin grout production until mixes have been approved by ENGINEER.
3. Laboratory Trial Batches: When laboratory trial batches are used to select grout proportions, prepare test specimens and conduct strength tests as specified in ACI 301, Section 4 - Proportioning. However, mixes need not be designed for

greater than 125 percent of the specified strength, regardless of the standard deviation of the production facility.

4. Field Experience Method: When field experience methods are used to select grout proportions, establish proportions as specified in ACI 301, Section 4.
5. Admixtures: Use air-entraining admixture in all grout. Use amounts of admixtures as recommended by the manufacturer for climatic conditions prevailing at the time of placing. Adjust quantities and types of admixtures as required to maintain quality control. Do not use admixtures which have not been incorporated and tested in the accepted design mix, unless otherwise authorized in writing by ENGINEER.

2.4 CURING MATERIALS

A. Curing materials shall be as specified in Section 03300, Cast-in-Place Concrete, and as recommended by the manufacturer of prepackaged grouts.

2.5 CONSISTENCY

A. The consistency of grouts shall be that necessary to completely fill the space to be grouted for the particular application. Dry pack consistency is such that the grout is plastic and moldable but will not flow. Where "dry pack" is called for in the Contract Documents, it shall mean a grout of that consistency; the type of grout to be used shall be as specified herein for the particular application.

B. The slump for topping grout and grout fill shall be adjusted to match placement and finishing conditions, but shall not exceed 4-inches.

C. The slump for Construction Joint Grout shall be 7 ± 1-inches.

2.6 MATERIALS

A. Aggregate:
   1. Provide aggregate that conforms to the material requirements of Section 03300 Cast-In-Place Concrete, and the grout manufacturer’s requirements.
   2. Store and precondition aggregate per grout manufacturer’s requirements.

B. Water:
   1. Potable quality water that is free from deleterious amounts of acids, alkalis, and organic substances.

PART 3 - EXECUTION

3.1 INSPECTION

A. Examine the substrate and conditions under which grout is to be placed and notify ENGINEER, in writing, of unsatisfactory conditions. Do not proceed with the Work until unsatisfactory conditions have been corrected in a manner acceptable to ENGINEER.

3.2 INSTALLATION

A. General:
   1. Place grout as shown and in accordance with manufacturer's instructions. If manufacturer's instructions conflict with the Specifications do not proceed until ENGINEER provides clarification.
   2. Manufacturers of proprietary products shall make available upon 72 hours notification the services of a qualified, full time employee to aid in assuring proper use of the product under job conditions.
   3. Placing grout shall conform to temperature and weather limitations in Section 03300, Cast-In-Place Concrete.
   4. Grout shall be cured following manufacturer’s instructions for prepackaged grout and the requirements in Section 03300, Cast-In-Place Concrete, for grout fill and topping grout.

B. Columns, Beams and Equipment Bases:
   1. Epoxy grout: After shimming equipment to proper grade, securely tighten anchor bolts. Properly form around the base plates, allowing sufficient room around the edges for placing the grout. Adequate depth between the bottom of the base plate and the top of concrete base must be provided to assure that the void is completely filled with the epoxy grout.
   2. Non-shrink, non-metallic grout: After shimming columns, beams and equipment to proper grade, securely tighten anchor bolts. Properly form around the base plates allowing sufficient room around the edges for placing the grout. Adequate depth between the bottom of the base plate and the top of concrete base must be provided to assure that the void is completely filled with the non-shrink, non-metallic grout.

C. Handrails and Railings:
   1. After posts have been properly inserted into the holes or sleeves, fill the annular space between posts and sleeve with the non-shrink, non-metallic grout. Bevel grout at juncture with post so that moisture flows away from post.

D. Construction Joints:
   1. Place a 6-inch minimum thick layer of Construction Joint Grout over the contact surface of the old concrete at the interface of horizontal construction joints as specified in Section 03251, Concrete Joints, and Section 03300, Cast-In-Place Concrete.

E. Topping Grout:
   1. All mechanical, electrical, and finish work shall be completed prior to placement of topping grout. The base slab shall be given a roughened textured surface by sandblasting or hydroblasting exposing the aggregates to ensure bonding to the base slab.
   2. The minimum thickness of grout topping shall be 1-inch.
   3. The base slab shall be thoroughly cleaned and wetted prior to placing topping and fill. No topping concrete shall be placed until the slab is complete free from standing pools or ponds of water. A thin coat of neat Type II cement slurry shall be broomed into the surface of the slab and topping or fill concrete shall be placed while the slurry is still wet. The topping and fill shall be compacted by rolling or tamping, brought to established grade, and floated. Grouted fill for tank and basin bottoms where scraping mechanisms are to be installed shall be screeded by blades attached to the revolving mechanism of the equipment in accordance with the procedures outlined by the equipment manufacturer after the grout is brought to the established grade.
   4. Topping grout placed on sloping slabs shall proceed uniformly from the bottom of the slab to the top, for the full width of the placement.
   5. The surface shall be tested with a straight edge to detect high and low spots which shall be immediately eliminated. When the topping has hardened sufficiently, it shall be steel troweled to a smooth surface free from pinholes and other imperfections. An approved type of mechanical trowel may be used as an assist in this operation, but the last pass over the surface shall be by hand-troweling. During finishing, no water, dry cement or mixture of dry cement and sand shall be applied to the surface.
   6. Cure and protect the grout topping as specified in Section 03300, Cast-In-Place Concrete.

F. Grout Fill:
   1. All mechanical, electrical, and finish work shall be completed prior to placement of grout fill. Grout fill shall be mixed, placed, and finished as required in Section 03300, Cast-In-Place Concrete.
   2. The minimum thickness of grout fill shall be 1-inch. Where the finished surface of grout fill is to form an intersecting angle of less than 45 degrees with the concrete surface it is to be placed against, a key shall be formed in the concrete surface at the intersection point. The key shall be a minimum of 3-1/2-inches wide by 1-1/2-inches deep.

3. The surface shall be tested with a straight edge to verify that the surface slopes uniformly to drain and to detect high and low spots which shall be immediately eliminated. When the grout fill has hardened sufficiently, it shall be steel troweled to a smooth surface free from pinholes and other imperfections. During finishing, no water, dry cement or mixture of dry cement and sand shall be applied to the surface.

++ END OF SECTION ++

SECTION 03601

CELLULAR LOW DENSITY GROUT

PART 1 - GENERAL

1.1 DESCRIPTION

A. Provide all labor, materials, and equipment and perform all operations required to furnish and install, complete, low pressure grouting (less than 6 psi) in the annular space between the steel casing and the gravity sewer pipe. The annular space shall be completely grouted to support the sewer pipe and provide long-term stability. Use a neat cement grout, sanded cement grout, or cellular cement grout for the annular space grouting.

B. Provide all labor, materials, and equipment and perform all operations required to furnish and install, complete, low pressure grouting (less than 6 psi) in the abandoned sewer lines as shown per the Contract Drawings. Use a neat cement grout, sanded cement grout, or cellular cement grout for filling the abandoned sewer pipe sections.

C. Performance Requirement:
   1. Determine grouting equipment, materials, and methods, subject to the limitations specified herein and elsewhere in the Contract Documents. It is the responsibility of the CONTRACTOR to ensure that the steel casing, the gravity sewer pipes, and all appurtenances are not damaged by the grouting operation.

1.2 QUALITY ASSURANCE

A. Reference Standards: Comply with applicable provisions and recommendations of the following, except as otherwise shown or specified.
   1. ACI 211.1, Practice for Selecting Proportions for Normal, Heavy-Weight and Mass Concrete.
   2. ACI 301, Specification for Structural Concrete (Includes ASTM Standards referred to herein).
   3. C31, Practice for Making and Curing Concrete Test Specimens in the Field
   4. ASTM C 33, Specification for Concrete Aggregates.
   5. ASTM C39, Test Method for Compressive Strength of Cylindrical Concrete Specimens
   6. ASTM C87, Test Method for Effect of Organic Impurities in Fine Aggregate on Strength of Mortar.
   7. ASTM C 109, Test Method for Compressive Strength of Hydraulic Cement Mortars (using 2-in. or 50 mm. Cube Specimens).

8. ASTM C 150, Specification for Portland Cement.
9. ASTM C 230, Specification for Flow Table for use in Tests of Hydraulic Cement.
10. ASTM C 531, Test Method for Linear Shrinkage and Coefficient of Thermal Expansion of Chemical- Resistant Mortars, Grouts, and Monolithic Surfacings.
11. ASTM C 579, Test Method for Compressive Strength of Chemical-Resistant Mortars, Grouts, Monolithic Surfacings and Polymer Concretes.
12. ASTM C 827, Test Method for Early Volume Change of Cementitious Mixtures.
13. ASTM C 882, Test Method for Bond Strength of Epoxy-Resin Systems Used with Concrete.
14. ASTM C 937, Specification for Grout Fluidifier for Preplaced-Aggregate Concrete.
15. ASTM C 939, Test Method for Flow of Grout for Preplaced-Aggregate Concrete (Flow Cone Method).
16. ASTM C 942, Standard Test Method for Compressive Strength of Grouts for Preplaced-Aggregate Concrete in the Laboratory.
17. ASTM C 1107, Specification for Packaged Dry, Hydraulic-Cement Grout (Non-shrink).
18. ASTM C 1181, Test Method for Compressive Creep of Chemical-Resistant Polymer Machinery Grouts.
19. ASTM D 696, Test Method for Coefficient of Linear Thermal Expansion of Plastics.

1.3 QUALITY CONTROL

A. The CONTRACTOR or specialty grouting subcontractor shall demonstrate experience and submit references for at least three projects using similar concrete backfill, grouting materials, and procedures.

B. The low-density cellular grout shall be tested in accordance with ASTM C495 and C796. Determine the wet and dry densities of cellular grout mixes in accordance with ASTM C796. Test neat cement in accordance with ASTM C109.

C. Prepare trial mixes of the proposed grout backfill 30 days prior to the commencement of grouting operations. Prepare two sets of compression test cylinders, four cylinders per set, from each trial mix. Test one set of cylinders at the age of 24 hours, one at 7 calendar days, and the other set of cylinders at an age of 28 calendar days.

1.4 FIELD TESTS

A. CONTRACTOR shall take compression test specimens during construction from the first placement of each type of grout, and at intervals thereafter as selected by

the ENGINEER to ensure continued compliance with these specifications. The specimens will be made by the CONTRACTOR or its representative.

B. Measure cellular grout weights at the point of placement in the annular space to determine its cast density. Weights used at the beginning of the day shall be used to adjust the mix accordingly to achieve the proper cast density. Approximately each hour thereafter, weights shall be measured to check and ensure correct density.

C. One set of four grout test cubes or cylinders (2-inch by 2-inch or 2-inch diameter) shall be made once per day or for each 100 cubic yards of material placed until 7 calendar day breaks are returned. CONTRACTOR shall employ testing laboratory services which shall use necessary grout containers and sampling techniques in order to obtain the required compressive breaks. Test one cube at 7 calendar days and one cube/cylinder at 28 calendar days. With acceptable 7 calendar day breaks, the collection of grout test cubes/cylinders may be decreased with the written approval of the ENGINEER. Grout cube testing will be provided by the CONTRACTOR.

D. Provide a system of valves or other means at both the point of discharge and at the point of placement to allow sampling and density checks.

E. Compression tests and fabrication of specimens for non-shrink grout will be performed as specified in ASTM C 109 at intervals during construction as selected by the ENGINEER. A set of three specimens will be made for testing at seven days, 28 days, and each additional time period as appropriate.

F. Compression tests and fabrication of specimens for epoxy grout will be performed as specified in ASTM C 579, Method B, at intervals during construction as selected by the ENGINEER. A set of three specimens will be made for testing at seven days, and each earlier time period as appropriate.

G. The cost of all laboratory tests on grout will be borne by the CONTRACTOR. CONTRACTOR to obtain specimens for testing. The cost of any additional tests and investigation on work performed which does not conform to the requirements of the specifications belongs to CONTRACTOR. Supply all materials necessary for fabricating the test specimens.

1.5 SUBMITTALS

A. Shop Drawings: Submit for approval the following:
   1. Refer to and comply with the requirements of Section 01332, Shop Drawing Procedures.
   2. For Grout Fill and Construction Joint Grout, copies of grout design mix and laboratory test reports for grout strength tests.

3. Submit drawings showing the method of preventing liner flotation, buckling, excessive deflection and damage, and how the grout supply will be terminated at the location where grout is being injected.
4. Submit proposed grout mix design and the procedures, methods, and equipment for placing grout between steel casing and gravity sewer pipe.
5. Submit trial mix details and testing results for grout trial mixes.
6. Submit field logs documenting grouting operations, containing, as a minimum, date, tests or sampling done on the grout, injection points, volume of grout injected, maximum grouting pressure at injection points, time of day procedures occurred, crew hours, equipment, crew size, special conditions or information, and grout mixes used. For each grout batch, submit a record, or if mixed continuously, submit a continuous record, of grout mix preparation including the amounts of cement, aggregate, water, admixtures, and other constituents. The field log or grout mix record shall include material delivery times and dates. Submit field log and grout mix record to the ENGINEER within one calendar day of each grouting shift.
7. CONTRACTOR shall submit an electronic copy per Specification Section 01332, Shop Drawing Procedures.
8. A copy of this specification section, with addendum updates included, and all referenced and applicable sections, with addendum updates included, with each paragraph check-marked to indicate specification compliance or marked to indicate requested deviations from specification requirements. Check marks (✓) shall denote full compliance with a paragraph as a whole. If deviations from the specifications are indicated, and therefore requested by the CONTRACTOR, each deviation shall be underlined and denoted by a number in the margin to the right of the identified paragraph, referenced to a detailed written explanation of the reasons for requesting the deviation. The ENGINEER shall be the final authority for determining acceptability of requested deviations. The CONTRACTOR shall furnish equipment and/or services as specified if an exception and/or deviation is rejected. The remaining portions of the paragraph not underlined will signify compliance on the part of the CONTRACTOR with the specifications. Failure to include a copy of the marked-up specification sections, along with justification(s) for any requested deviations to the specification requirements, with the submittal shall be sufficient cause for rejection of the entire submittal with no further consideration.

B. Reports and Certificates, submit for approval the following:
1. For proprietary materials, submit copies of manufacturer's certification of compliance with the specified properties.
2. Submit certified testing lab reports for ASTM C 1107, Grade B and Grade C (as revised herein) requirements for grouts tested at a fluid consistency for temperatures of 45, 73.4, 90°F with a pot life of 30 minutes at fluid consistency.

3. Submit certification that materials meet specification requirements for nonproprietary materials.
4. Submit certifications that all grouts used on the project are free of chlorides or other chemicals causing corrosion.
5. Manufacturer's specifications and installation instructions for all proprietary materials.

C. Informational Submittals:
1. Grout placement plan.
2. Description of proposed curing methods.

PART 2 - MATERIALS

2.1 LOW PRESSURE GROUT

A. Cement shall conform to ASTM C150, Type II, with maximum tricalcium aluminate not to exceed 8%. The maximum percent alkalies shall not exceed 0.6%. Pozzolans and other cementious material may be used. If cellular grout is used as a foaming agent, the manufacturer or grouting subcontractor shall design the mix, prepare trial batch, test sample, and provide detailed testing data.

B. Admixtures may be used to improve pumpability, control time of set, and to prevent segregation and bleeding, subject to the acceptance of the ENGINEER and if cellular grout is used, the foaming agent shall be recommended by the manufacturer. If cellular grout is used, use admixtures in accordance with the foaming agent manufacturer's recommendations. Do not use admixtures that promote steel corrosion.

C. If cellular grout is used, a company that specializes in the manufacture of such a product shall supply the foaming agent. The foaming agent manufacturer shall have been continuously manufacturing the foaming agent for the past five years. The foaming agent shall meet the requirements of ASTM C869 when tested in accordance with ASTM C796.

D. Water shall be free of organic material and other impurities that might reduce the strength, durability or other quality of the grout. Water shall have a pH of 7.0 to 9.0, a maximum chloride concentration of 300 mg/l (per ASTM D512), and a maximum sulfate concentration of 500 mg/l (per ASTM D516).

E. Mix Design: Develop and submit for approval one or more mixes to completely fill the annular space based on the size of the annular void and to provide less that 0.5% shrinkage by volume. The mix shall contain a minimum of six sacks cement per cubic yard of grout. The CONTRACTOR shall prepare trial mixes for testing and review.

2.2 PROPERTIES

A. Cast Density: The grout shall have a minimum cast density of 45 lbs per cubic foot and a maximum of 60 lbs per cubic foot.

B. Compressive Strength: The grout fill shall have a minimum 24 hour compressive strength of 100 psi and a minimum 28 calendar day compressive strength of 300 psi.

C. The apparent viscosity shall not exceed 20 seconds in accordance with ASTM C939, unless otherwise approved in writing by the ENGINEER.

D. Grout pH shall be 10.5 or greater.

2.3 EQUIPMENT

A. The pressure grouting machine shall be of a low pressure type that has been used successfully for similar work over a period of at least three years. Bidders shall be required to present evidence that his organization or designated subcontractor has successfully performed similar work by the use of a machine of the type proposed to be used hereunder.

B. General Configuration:
   1. Means of accurately measuring and controlling grout ingredients at the mixer shall be provided.
   2. The arrangement of grouting equipment shall provide a continuous supply of grout throughout the system and permit accurate pressure control. Grout pumps, mixers, and agitators shall be located as close as practical to the hole being grouted using the minimum length of grout line. Equipment for mixing and injecting grout shall be adequate to satisfactorily mix and agitate the grout and force it into the grout holes in a continuous flow at the desired pressure. Pumps shall be capable of continuously developing a sustained pressure of 3 psi at the grout connection; however, do not exceed the maximum specified pressure.
   3. Hoses for pressure grouting shall have an inside diameter not less than 1-1/2-inches and be capable of withstanding the maximum water and grout pressures to be used. Equipment lines shall be kept clean by constant circulation of grout and periodic flushing with water.
   4. Provide mechanical agitator tanks equipped with suitable screens in addition to the grout mixer.

C. Controls and Instrumentation:
   1. Pressure Gages:
      a. Equip the grouting plant with reliable pressure gages capable of measuring the maximum grout pressure anticipated at the manifold

hookup at the collar of each hole being grouted and at the pump. Make available four clean spare pressure gauges on site at all times.

b. Provide and protect an accurately calibrated check gage and check operating gages daily or as directed by the ENGINEER.
   1) Grout Flow: At the grout injection point, provide suitable valves so the pressure and grout flow at the grout starting location may be regulated and monitored by increasing or decreasing the flow in the grout return line.
   2) Volume of Grout: Provide means for accurately determining the amount of grout injected into the starting location. Provide grouting equipment with a meter, calibrated in cubic feet to the nearest 0.10 of a cubic foot.
   3) Provide a mixer with a meter for measuring the amount of mixing water used, calibrated to read in cubic feet to the nearest 0.10 of a cubic foot.
   4) Stop Valves: Provide required stop (check or ball) valves at the collar of the injection location and approved in writing by the ENGINEER for use in maintaining pressure as required until the grout has set.

PART 3 - EXECUTION

3.1 SAFETY REQUIREMENTS

A. Methods of construction shall be such as to ensure the safety of the Work, Project participants, the public, third parties, and adjacent property, whether public or private. All Work shall conform to the requirements of all Federal, State, and local laws and regulations.

B. Perform grouting operations by methods and with equipment, which will positively control dust, fumes, vapors, gases, fibers, fogs, mists, and other atmospheric impurities.

C. Provide lighting and ventilation to ensure proper performance and inspection of work. Provide ventilation equipment and ductwork as close to the working area as practicable. Provide electrical, water, and other facilities required to complete the grouting of the steel liner.

D. Control noise and dust in accordance with applicable Federal, State, and local laws, safety codes, regulations, and ordinances.

E. Administer an accident prevention program, and prepare a code of safe practices and an emergency plan. Provide the ENGINEER with a copy of each prior to

starting grouting. Hold safety meetings weekly and provide safety instruction for new employees.

3.2 QUALITY CONTROL

A. Perform all Work, including required testing and inspection, in the presence of the ENGINEER. Notify the ENGINEER at least 24 hours in advance of the start-up of a grouting operation.

B. Perform all Work in accordance with all current applicable regulations and codes of Federal, State, and local agencies. In the event of conflict, comply with the strictest or most restrictive applicable requirements.

3.3 GROUT COMPOSITION

A. Provide grout by combining controlled quantities of sand, cement, water, fluidifier, bentonite, and other admixtures in the proportions specified herein or as approved in writing by the ENGINEER. The resulting grout shall show no shrinkage and have low water absorptive characteristics. Anticipate that the addition of sand will require additional fluidifier to be added to the grout mix.

B. Recirculate all grout mixes in the grout lines when any initial or new mix is batched or after adding water, fluidifier, or sand to the mix. Recirculate the mix for a minimum of two minutes prior to pumping the grout in the grout hole.

3.4 GROUTING

A. Following steel casing and gravity sewer installation, completely fill the annular space between the casing and the gravity sewer pipe with grout in accordance with the following:
   1. The limits of each grout placement operation shall be acceptable to the ENGINEER.
   2. At the start of the grouting operations, extend the discharge pipeline from the pumping equipment to the point of lowest elevation of the section of steel casing being grouted. The methods used in placing the grout shall be such as to ensure the complete filling of the annular space between the steel casing and the gravity sewer pipe. Grout shall be of proper consistency and shall be adequately consolidated to fill all voids. Grouting shall generally progress sequentially in a constant up gradient direction from the lowest point to the highest point.
   3. Place grout in a sufficient number of lifts to prevent pipe flotation, unless stiffeners or pipe supports and closely-spaced blocking of sufficient structural rigidity are provided to prevent pipe floatation, movement, buckling, excessive deflection, collapse, and damage to the pipe. Lift heights required to prevent flotation and damage to the pipe shall be determined by the CONTRACTOR.

B. Commence pressure grouting of steel casing after completion of gravity sewer installation or abandonment of existing gravity sewer pipes.

C. Fill all voids between the steel casing and the gravity sewer pipe. Do not place new lifts of grout on top of the previous lifts until the previous lifts have achieved sufficient strength to withstand the force exerted by the new lift.

D. Provide an arrangement of grouting equipment for continuous circulation of grout in the system and accurate pressure control. Keep equipment and hoses clean by constant circulation of grout and by periodic flushing with water.

E. Provide equipment and conduct grouting procedures such that grouting pressures shall not exceed the maximum specified at the grout injection location. Use stop valves at the collar of each injection location to maintain pressure as required until the grout has set.

F. Maintain grouting equipment in satisfactory operating condition to ensure continuous and efficient grouting operations.

3.5 MIXING AND INJECTION OF GROUT

A. Provide materials free of lumps when put into the mixer and agitate the grout mix constantly. Grout shall flow unimpeded and shall completely fill all voids. After 90 minutes of mixing, remove grout not injected from the mixing and injection equipment and dispose of off-site.

B. In general, grouting lifts shall be considered completed when the pressure at the grout nozzle has reached the maximum specified pressure. After the grouting lift at any grout pipe is finished, maintain the pressure by means of a stopcock or other suitable device until the grout has set. Fill any voids left after removing the packer or grout pipe with mortar.

3.6 CLEANUP AND RESTORATION

A. Take necessary precautions to protect and preserve the steel casing and the gravity sewer pipes from damage. Replace or repair any damage to the gravity sewer pipes or other appurtenances caused by or occurring during the grouting operations as determined by the ENGINEER.

B. During grouting work, provide for adequate disposal of waste and wastewater. Minimize grout and mortar spills and cleanup immediately after the grouting shift is complete. Grouting contractor to clean section of pipe after injection prior to commencing the next section of grout injection. Pipe shall be cleaned of all debris caused by grout contractor.

+ + END OF SECTION + +

SECTION 03930

CONCRETE REPAIR AND REHABILITATION

PART 1 - GENERAL

1.1 DESCRIPTION

A. Scope:
   1. Provide all labor, materials, equipment and incidentals as shown, specified and required to repair or rehabilitate all existing concrete members and surfaces identified in the Contract Documents.
   2. Repair all damage to new concrete construction as specified herein, except that where such repairs are specified in Section 03300, Cast-in-Place Concrete.

B. Coordination:
   1. Review installation procedures in the following Section and coordinate the installation of items that must be included with the repair and rehabilitation of concrete.

1.2 QUALITY ASSURANCE

A. Reference Standards: Comply with the applicable provisions and recommendations of the following, except as otherwise shown or specified:
   1. ASTM C 109, Test Method for Compressive Strength of Hydraulic Cement Mortars.
   2. ASTM C 157, Test Method for Length Change of Hardened Cement Mortar and Concrete.
   3. ASTM C 882, Test Method for Bond Strength of Epoxy-Resin Systems Used with Concrete.
   4. ASTM D 412, Test Methods for Vulcanized and Thermoplastic Rubbers and Thermoplastic Elastomers - Tension.
   5. ASTM D 624, Test Method for Tear Strength of Conventional Vulcanized Rubber and Thermoplastic Elastomers.
   6. ASTM D 903, Test Method for Peel or Stripping Strength of Adhesive Bonds.
   7. ASTM G 109, Test Method for Determining the Effects of Chemical Admixtures on the Corrosion of Embedded Steel Reinforcement in Concrete Exposed to Chloride Environments.

B. Construction Tolerances: Construction tolerances shall be as specified in Section 03300, Cast-in-Place Concrete, except as specified herein and elsewhere in the Contract Documents.

1.3 SUBMITTALS

A. Shop Drawings: Submit for approval the following:
   1. Submit manufacturer's product information and recommended placement procedures for all repair materials.
   2. Submit Shop Drawings, when requested by ENGINEER, to show all methods for supporting existing structures, pipes, etc., during demolition and repair activities. Comply with the requirements of Section 01332, Shop Drawing Procedures.
   3. Copies of certificates that show that the repair materials are approved by the National Sanitation Foundation (NSF) for use on surfaces, which are in contact with potable water.

1.4 PRODUCT DELIVERY, STORAGE AND HANDLING

A. Delivery of Materials:
   1. Deliver all materials to the job site in original, new and unopened packages and containers bearing manufacturer’s name and label, and the following information.
      a. Name or title of material.
      b. Manufacturer’s stock number and date of manufacture.
      c. Manufacturer’s name.

B. Storage of Materials:
   1. Storage only acceptable project materials on project site.
   2. Store in a suitable location approved by ENGINEER. Keep area clean and accessible.
   3. Restrict storage to repair materials and related equipment.
   4. Comply with health and fire regulations including the Occupational Safety and Health Act of 1970.

C. Handling of Materials:
   1. Handle materials carefully to prevent inclusion of foreign materials.
   2. Do not open containers or mix components until necessary preparatory Work has been completed and application Work will start immediately.

PART 2 - PRODUCTS

2.1 REPAIR MORTAR

A. Repair mortar shall be a prepackaged cement-based product specifically formulated for the repair of concrete surface defects. The repair mortar shall be a two-component polymer-modified, portland cement, fast setting, trowel-grade mortar. The repair mortar shall be enhanced with a penetrating corrosion inhibitor and shall have the following properties:

Physical Property	**Value**	**ASTM Standard**
Compressive Strength (minimum)		C 109
at 1 day	2000 psi	
at 28 days	6000 psi	
Bond Strength (minimum)		C 882*
at 28 days	1800 psi	

* Modified for use with repair mortars.

B. Where the least dimension of the placement in width or thickness, exceeds 4-inches, the repair mortar shall be extended by addition of aggregate as recommended by the manufacturer.

C. Product and Manufacturer: Provide one of the following:
   1. SikaTop 122 Plus, SikaTop 123 Plus, or SikaTop 126 Plus, as manufactured by Sika Corporation.
   2. Or equal.

2.2 JOINT REPAIR SYSTEM

A. Joint Repair System: The joint repair system shall consist of two components, an epoxy resin adhesive and hypalon sheeting.
   1. Epoxy Resin Adhesive: Provide a two-component epoxy resin as follows:
      a. Component A shall be a modified epoxy resin of the epichlorohydrin bisphenol A type containing suitable viscosity control agents and pigments. It shall not contain butyl glycidyl ether.
      b. Component B shall be primarily a reaction product of a selected amine blend with an epoxy resin of the epichlorohydrin bisphenol A type containing suitable viscosity control agents, pigments and accelerators.
   2. Hypalon Sheeting: Provide Hypalon sheeting as follows:
      a. Hypalon sheeting shall consist of Hypalon rubber. It shall be perforated along the bonding edge to provide a mechanical key. It shall have the ability to be vulcanized with hydrocarbon solvent to permit its adhesion to an epoxy resin adhesive.
      b. The sheeting shall be provided in 12-inch width with a thickness of 40 mils.
      c. The sheeting shall be able to be lapped or seamed by heat or by anaromatic hydrosolvent strip.
      d. The sheeting shall be supplied with a removable center expansion strip.
   3. Product and Manufacturer: Provide one of the following:

a. Sikadur Combiflex, as manufactured by Sika Corporation.
b. Or equal.

2.3 EXPOSED REBAR REPAIR

A. The exposed reinforcing repair system shall consist of two components, a first application of a corrosion inhibitor and then a final application of a protective slurry mortar.

B. Corrosion Inhibitor:
1. The corrosion inhibitor shall penetrate the hardened concrete surface and form a protective layer on the reinforcement. It shall have the following properties:
   a. The product shall not change the substrate's color, appearance, or texture.
   b. Penetration (SNMS Analysis): 1/10 to 4/5 inches/day.
   c. Coating thickness (XPS and SIMS Analysis): 100 to 1000 angstroms.
   d. Corrosion Current Reduction (ASTM G 109): 65 percent at one year.
   e. Chloride Displacement (XPS and SIMS Analysis): Passes.
   f. Effectiveness in Carbonated Conditions (Electrochemical): passes.
   g. The product must not form a vapor barrier.
   h. The product must be environmentally sound.
   i. Post-application verification (Chromatography Plate Test): Passes.
   j. Longevity (Ten Year Accelerated Weather Testing): Passes.
2. Product and Manufacturer: Provide one of the following:
   a. Sika FerroGard 903, as manufactured by Sika Corporation.
   b. Or equal.

C. Protective Slurry Mortar:
1. Protective slurry mortar shall be a two-component, polymer-modified, cementitious waterproofing and protective slurry mortar. Provide two coats at a rate of 50 sq. ft./gal./coat.
2. Product and Manufacturer: Provide one of the following:
   a. Sikatop Seal 107, as manufactured by Sika Corporation.
   b. Or equal.

PART 3 - EXECUTION

3.1 INSPECTION

A. Examine areas and conditions under which repair Work is to be installed, and notify ENGINEER, in writing, of conditions detrimental to proper and timely completion of Work. Do not proceed with Work until unsatisfactory conditions have been corrected in a manner acceptable to ENGINEER.

3.2 GENERAL

A. Surface Preparation:
   1. The entire area to be repaired shall have all laitance, foreign material, and unsound concrete removed by chipping, abrasive blasting or hydroblasting. The surface shall be further roughened as specified herein. Where non-shrink grout or repair mortar is used, any additional surface preparation steps recommended by the manufacturer shall be performed.
   2. Where repair concrete, shotcrete, or cement grout is used, and a bonding agent is not required, or where the repair mortar or non-shrink grout manufacturer recommends a wet or saturated surface, water shall be delivered to the surface continuously for a minimum of four hours. Where large surface areas are to be repaired, fog spray nozzles mounted on stands shall be provided in sufficient numbers such that the entire surface to be repaired is in contact with the fog spray cloud. The concrete shall be prevented from drying until after the repair operation is completed. Unrepaired surfaces shall be rewetted by water spray on at least a daily basis. Should more than four days elapse without rewetting the unrepaired surfaces, the original saturating procedure shall be repeated. All standing water in areas to be repaired shall be removed prior to placement of repair material. Means to remove excess water from the structure shall be provided.
   3. Where the repair material manufacturer recommends the use of an epoxy-bonding agent, the recommendations of both the repair material and bonding agent manufacturers shall be followed.

B. Care shall be taken to fully consolidate the repair material, completely filling all portions of the area to be filled.

C. The repair surface shall be brought into alignment with the adjacent existing surfaces to provide a uniform, even surface. The repair surface shall match adjacent existing surfaces in texture and shall receive any coatings or surface treatments which had been provided for the existing surface.

D. Curing:
   1. Curing of repair mortar and non-shrink grout shall be according to the manufacturer's recommendations except that the minimum cure period shall be three days.
   2. Curing of other materials shall be according to Section 03300, Cast-in-Place Concrete.

3.3 TREATMENT OF SURFACE DEFECTS

A. Surface defects are depressions in a concrete surface which do not extend all the way through the member. The depressions can result from the removal of an embedded item, the removal of an intersecting concrete member, physical

damage, unrepaired rock pockets created during original placement, or spalls from corroded reinforcing steel or other embeds.

B. Preparation:
   1. All loose, damaged concrete shall be removed by chipping to sound material.
   2. Where existing reinforcing bars are exposed, concrete shall be removed to a minimum of 1-inch all around the bars. If the existing bars are cut through, cracked, or the cross sectional area is reduced by more than 25 percent, the ENGINEER shall be notified immediately.
   3. The perimeter of the damaged area shall be score cut to a minimum depth of 0.5-inch and a maximum depth to not cut any existing reinforcing steel. Existing concrete shall be chipped up to the score line so that the minimum thickness of repair mortar is 0.5-inch.

C. Repair Material:
   1. Repair of surface defects in members, which are normally in contact with water or soil, or in the interior surfaces of enclosed chambers that contain water shall be made only with repair mortar.
   2. Repair of other surface defects may be by the application of repair mortar, repair concrete, shotcrete, or cement grout, as appropriate.

3.4 PATCHING OF LINED HOLES

A. This Section applies to those openings which have embedded material over all or a portion of the inside edge. Unless indicated to remain in place on the Drawings or by the ENGINEER, such embedded materials shall be removed and the remaining hole repaired as specified above. The requirements for repairing holes in concrete specified above shall apply as modified herein.

B. Where embedded material is allowed to remain, it shall be trimmed back a minimum of 2-inches from the concrete surface. The embedded material shall be roughened or abraded to promote good bonding to the repair material. Any substance that interferes with good bonding shall be completely removed.

C. Any embedded item that is not securely and permanently anchored into the concrete shall be completely removed.

D. Embedded items which are larger than 12-inches in their least dimension shall be completely removed, unless they are composed of a metal to which reinforcing steel can be welded. Where reinforcement is required, it shall be welded to the embedded metal.

E. The following additional requirements apply to concrete members which are in contact with water or soil.
   1. Lined openings, which are less than 4-inches in their least dimension, shall be filled with epoxy grout.

2. Lined openings which are greater than 4-inches, but less than 12-inches in their least dimension, shall be coated with an epoxy bonding agent prior to being filled with Class I non-shrink grout.
3. Lined openings which are greater than 12-inches in their least dimension shall be coated with an epoxy bonding agent and shall have a hydrophilic rubber waterstop or bead of hydrophilic sealant installed to the interior of the opening at the wall centerline, as required by Section 03251, Concrete Joints, prior to being filled with any approved repair material.

3.5 REPAIR OF DETERIORATED CONCRETE

A. This Section pertains to concrete which has been damaged due to corrosion of reinforcing steel, physical damage due to abrasion, and damage due to chemical attack. The only material acceptable for surface repair is repair mortar as specified herein. Where the repaired surface is to be subsequently covered with a PVC liner material, the finishing details shall be coordinated with the requirements of installing the liner material.

B. Surface Preparation:
   1. All loose, broken, softened, and acid contaminated concrete shall be removed by abrasive blasting and chipping down to sound, uncontaminated concrete.
   2. When the removal of deteriorated concrete is completed, CONTRACTOR to notify the ENGINEER, in writing. Two days shall be scheduled for the ENGINEER to inspect the surface, perform testing for acid contamination, determine if additional concrete must be removed, and to develop any special repair details that may be required. Should it be determined that additional concrete must be removed to reach sound, uncontaminated material, another two week period shall be scheduled for further evaluation after the end of the additional removal.
   3. Additional surface preparation shall follow the recommendations of the repair mortar manufacturer.
   4. Isolated areas of exposed reinforcing bars shall be treated as required for repair of surface defects. If extensive areas of reinforcement are uncovered after removal of deteriorated concrete, repair methods shall be as determined by the ENGINEER.

C. Repair Mortar Placement:
   1. The procedures recommended by the manufacturer for the mixing and placement of the repair mortar shall be followed.
   2. After the initial mixing of the repair mortar, additional water shall not be added to change the consistency should the mix begin to stiffen.
   3. Repair mortar shall be placed to a minimum thickness as recommended by the manufacturer, but not less than 0.50-inch. Where removal of deteriorated concrete results in a repair thickness of less than 0.5-inch to return to original concrete surface location in isolated areas totaling less than ten percent of the

total repair area, additional concrete shall be removed to obtain the 0.5-inch thickness. Where the area with repair thickness of less than 0.5-inch exceeds ten percent of the total repair area, notify the ENGINEER. In any case, repair mortar shall be added so that the minimum cover over existing reinforcing steel is 2-inches. Do not place repair mortar so as to create locally raised areas. Where there is a transition with wall surfaces which are not in need of repair, the repair mortar shall not be feathered at the transition. A score line shall be sawcut to not less than the minimum repair mortar depth and concrete chipped out to it to form the transition. Care shall be taken to not cut or otherwise damage any reinforcing steel.

4. The repair mortar shall be placed to an even, uniform plane to restore the member to its original surface. Tolerance for being out of plane shall be such that the gap between a 12-inch straight edge and the repair mortar surface does not exceed 0.125-inch and the gap between a 48-inch straight edge and the repair mortar surface does not exceed 0.25-inch. This shall apply to straight edges placed in any orientation at any location.

D. Finishing:
1. The repair mortar shall receive a smooth, steel trowel finish.
2. When completed, there shall be no sharp edges. All exterior corners, such as at penetrations, shall be made with a 1-inch radius. All interior corners shall be square except corners to receive PVC lining shall be made with a 2-inch repair mortar fillet.

E. Curing:
1. Curing shall be performed as recommended by the repair mortar manufacturer, except that the cure period shall be at least 24 hours and shall be by means of a continuous fog spray. If the manufacturer recommends the use of a curing compound, no material shall be used that would interfere with the bond of the protective coating system or adhesive used for placing PVC lining, where required.

3.6 TREATMENT OF EXPANSION JOINT REPAIR

A. Surfaces to be repaired shall have all laitance, foreign material, and unsound concrete removed by chipping, abrasive blasting or hydroblasting.

B. Follow all other surface preparation and application specifications as recommended by manufacturer.

3.7 EXPOSED REBAR REPAIR

A. The entire area to be repaired shall have all corrosion, foreign materials, and unsound concrete by means of abrasive blasting or hydroblasting.

B. Surface shall be visually dry before application of the corrosion inhibitor. The corrosion inhibitor shall be placed liberally to achieve 100 sq ft/gal coverage in two or more coats by allowing it to soak into the substrate. The re-coat time between coats shall be a minimum of one hour. Apply by use of rollers, brushes, or hand-pressure spray equipment.

C. After the last coat of the corrosion inhibitor is applied, a minimum curing time of 24 hours is required.

D. High Pressure Wash all surfaces to remove filmy residue that is left on the surface by the corrosion inhibitor. Residue acts like bond breaker and must be removed before mortar coating.

E. For mortar coating, refer to Paragraph 3.5.C, Repair Mortar Placement, Paragraph 3.5.D, Finishing, and Paragraph 3.5.E, Curing.

3.8 FIELD QUALITY CONTROL

A. CONTRACTOR to provide will employ a testing laboratory to perform field quality control testing. ENGINEER will direct the CONTRACTOR on the number of standard compression tests and specimens required as specified below, under the direct inspection by ENGINEER. Furnish all necessary assistance required by ENGINEER. Provide all labor, material and equipment required including rods, molds, thermometer, curing in a heated storage box, and all other incidentals required. Above will be subject to approval by ENGINEER. Furnish all necessary storage, curing, and transportation required by the testing.

B. Field tests of cement-based grouts and repair mortar:
   1. Compression test specimens will be taken during construction from the first placement of each type of mortar or grout, and at intervals thereafter as selected by the ENGINEER to ensure continued compliance with these specifications. The specimens will be made by the ENGINEER or its representative.
   2. Compression tests and fabrication of specimens for repair mortar and non-shrink grout will be performed as specified in ASTM C 109. A set of three specimens will be made for each test. Tests shall be made at 7 days, 28 days, and additional time periods as appropriate.
   3. All material, already placed, which fails to meet the requirements of these specifications, is subject to removal and replacement at the cost of CONTRACTOR.
   4. The cost of all laboratory tests on mortar and grout will be borne by the CONTRACTOR to provide and CONTRACTOR shall obtain specimens for testing. The cost of any additional tests and investigation on Work performed which does not conform to the requirements of the specifications

will be the CONTRACTOR's responsibility. Supply all materials necessary for fabricating the test specimens.

C. Repair Concrete: Repair concrete shall be tested as required in Section 03300, Cast-in-Place Concrete.

++ END OF SECTION ++

SECTION 05581

FLOOR ACCESS HATCH COVERS

PART 1 - GENERAL

1.1 DESCRIPTION

A. Scope:
   1. Provide all labor, materials, equipment and incidentals as shown on the Drawings, specified and required to furnish hinged floor access hatch covers.
   2. The types of floor access hatch covers include the following:
      a. Aluminum covers with standard angle frame.

1.2 QUALITY ASSURANCE

A. Manufacturer: All floor covers for the project shall be the product of a single manufacturer. Covers from more than one manufacturer will not be permitted.

B. Reference Standards: Comply with applicable provisions and recommendations of the following, except as otherwise shown or specified.
   1. ASTM B 209, Specification for Aluminum and Aluminum Alloy Sheet and Plate.
   2. ASTM B 210, Specification for Aluminum and Aluminum Alloy Drawn Seamless Tubes.
   3. ASTM B 221, Specification for Aluminum and Aluminum Alloy Extruded Bars, Rods, Wire, Shapes and Tubes.
   4. NAAM, Metal Finishes Manual and Metal Box Grating Manual.
   5. Aluminum Association Standards.

1.3 SUBMITTALS

A. Shop Drawings: Submit for approval the following:
   1. Dimensional plans of all floor covers, quantity schedule, details of fabrication and erection, and anchorage.
   2. Refer to and comply with the requirements of Section 01332, Shop Drawing Procedures.
   3. CONTRACTOR shall submit an electronic copy per Specification Section 01332, Shop Drawing Procedures.
   4. A copy of this specification section, with addendum updates included, and all referenced and applicable sections, with addendum updates included, with each paragraph check-marked to indicate specification compliance or marked to indicate requested deviations from specification requirements. Check marks (✓)

shall denote full compliance with a paragraph as a whole. If deviations from the specifications are indicated, and therefore requested by the CONTRACTOR, each deviation shall be underlined and denoted by a number in the margin to the right of the identified paragraph, referenced to a detailed written explanation of the reasons for requesting the deviation. The ENGINEER shall be the final authority for determining acceptability of requested deviations. The CONTRACTOR shall furnish equipment and/or services as specified if an exception and/or deviation is rejected. The remaining portions of the paragraph not underlined will signify compliance on the part of the CONTRACTOR with the specifications. Failure to include a copy of the marked-up specification sections, along with justification(s) for any requested deviations to the specification requirements, with the submittal shall be sufficient cause for rejection of the entire submittal with no further consideration.

1.4 GUARANTEE

A. Furnish a written guarantee obtained from the manufacturer. Guarantee shall state the following:
   1. Floor covers are to operate properly and be free of defects in material and workmanship for a period of five years from date of purchase.
   2. Should any part fail to function, or break in normal use during this period, manufacturer shall furnish a new part at no additional cost to OWNER.

PART 2 - PRODUCTS

2.1 MATERIALS AND FABRICATION

A. General:
   1. Provide Manufacturer's standard fabricated units, modified, if necessary, to comply with the requirements of the Contract Documents. Where standard units are not available for the sizes and types required, custom fabricate units to match manufacturer's similar units.
   2. Fabricate each unit in the shop, complete with anchors, gaskets, hardware and accessory items, as required.

B. Aluminum Covers with Standard Frame:
   1. Provide aluminum covers, with standard angle frame, designed to withstand AASHTO H-20 loadings.
   2. Access hatches shall be sized per the Contract Drawings for entry and slide gate removal.
   3. Provide frame and cover to prevent storm water infiltration
   4. Provide Type 316 stainless steel hinges and hardware.

5. Product and Manufacturer: Provide one of the following:
   a. The Bilco Company.
   b. Or equal.

C. Door leaves shall be checkered or diamond plate, or other approved non-slip surface.

D. Frames shall have anchor flanges or strap anchors.

E. Door shall have hold-open devices.

F. Door leaves ten square feet and larger shall have torsion bars, springs or other approved means, for counterbalanced operation.

G. Covers shall have flush exterior locking device with removable handle, and interior turn handle.

H. All aluminum covers shall be mill finished. Protect finish with a factory applied coating of lacquer standard with the manufacturer.

PART 3 - EXECUTION

3.1 INSTALLATION

A. Install doors in accordance with approved Shop Drawings and Manufacturer's instructions.

B. Set doors plumb, level and true to line or grade, without warp or rack, for anchoring under other Sections of these Specifications.

C. Protection of Aluminum from Dissimilar Materials: Coat all surfaces of aluminum in contact with dissimilar materials such as concrete, masonry, steel and other metals.

+ + END OF SECTION + +

SECTION 06611

FIBERGLASS REINFORCED PLASTIC GRATINGS AND SUPPORT FRAMING MEMBERS

A. GENERAL

1.2 DESCRIPTION

A. Scope:
1. Provide all labor, materials, equipment and incidentals as shown on the Drawings, specified and required to furnish and install fiberglass grating and support framing members. The Work also includes:
   a. Providing grating to accommodate the Work under this and other Sections and attaching to the grating and all items such as fasteners and all items required including embedded angles for which provision is not specifically included under other Sections.
   b. Providing Fiberglass Reinforced Plastic (FRP) angles where shown on the Drawings or required for embedment in concrete or support of gratings.
   c. Providing support framing members as required.
2. Comply with the requirements of Section 03252, Anchorage in Concrete and Adhesive Anchors.

B. Coordination:
1. Review installation procedures under this and other Sections and coordinate installation of items that must be installed with or before the fiberglass reinforced plastic gratings, treads and support framing members Work.

1.3 QUALITY ASSURANCE

A. Reference Standards: Comply with applicable provisions and recommendations of the following, except as otherwise shown on the Drawings or specified.
1. ASTM D 635, Test Method for Rate of Burning and/or Extent and Time of Burning of Plastics in a Horizontal Position.
2. ASTM D 638, Test Method for Tensile Properties of Plastics.
3. ASTM D 790, Test Methods for Flexural Properties of Unreinforced and Reinforced Plastics and Electrical Insulating Materials.
4. ASTM D 2344/D 2344M, Test Method for Short-Beam Strength of Polymer Matrix Composite Materials and their Laminates.
5. ASTM D 495, Test Method for High Voltage, Low-Current, Dry Arc Resistance of Solid Electrical Insulation.
6. ASTM D 696, Test Method for Coefficient of Linear Thermal Expansion of Plastics between -30 Degrees C and 30 Degrees C with a Vitreous Silica Dilatometer.

7. ASTM E 84, Test Method for Surface Burning Characteristics of Building Materials.
8. National Bureau of Standards, PS 15-69, Custom Contact-Molded Reinforced-Polyester Chemical Resistant Process Equipment.
9. OSHA Federal Register, Volume 39, No. 125, Section 1910.23.
10. Standards of the Reinforced Plastic/Composites Institute.
11. 2024 International Building Code

B. Source Quality Control:
1. Obtain all gratings, treads and support framing members components and accessories from the same manufacturer.

C. Qualifications:
1. FRP gratings, structural shapes, and all related accessories shall be manufactured and fabricated in North America and the manufacturers should have at least 5 years of experience in manufacturing the FRP products.

D. Field Measurements:
1. Take field measurements prior to preparation of Shop Drawings and fabrication where required, to ensure proper fitting of the Work.

E. Provide manufacturers standard three-year warranty on all FRP products against defects in materials and workmanship.

1.4 SUBMITTALS

A. Samples: Submit for approval the following:
1. Representative samples of grating, treads and support framing members, fasteners and other finished products. ENGINEER'S review will be for type and finish only. Compliance with all other requirements is the exclusive responsibility of CONTRACTOR.

B. Shop Drawings:
1. Product technical data including:
   a. Acknowledgement that products submitted meet requirements of standards referenced.
   b. Manufacturer's installation instructions.
   c. Manufacturer's recommendations on reinforcing field cut openings.
2. Fabrication and/or layout drawings.
   a. Plan showing profile, location, section and details of each item including anchorage or support system(s).
   b. Locations and type of expansion joints.
   c. Materials of construction including shop applied coatings.
   d. Listing of all accessory items being provided indicating material, finish, etc.

3. Certifications:
   a. Certification of registered professional engineer's qualifications.
   b. Certification that all components and systems have been designed and fabricated to meet the loading requirements specified.
4. Manufacturer's full line of colors available for each component.

C. Informational Submittals:
   1. Complete design calculations of all supporting structure and fastening conditions.
      a. Design calculations to be for information only meeting specification requirements.

D. The Work shall not be fabricated until CONTRACTOR submits field measurements of the openings and until the manufacturer's drawings based upon CONTRACTOR'S measurements have been approved by ENGINEER.

1.5 DELIVERY, STORAGE, AND HANDLING

A. Deliver and handle each item to preclude damage.

B. Store all items on skids above ground. Keep free of dirt and which will damage items or finish and protect from corrosion and UV exposure.

PART 2 - PRODUCTS

2.1 MANUFACTURERS

A. Subject to compliance with the Contract Documents, the following manufacturers are acceptable:
   1. Grating and solid plate:
      a. American Grating
      b. Enduro Composites.
      c. Fibergrate Composite Structures, Inc.
      d. Seasafe, Inc.
      e. Strongwell Corporation.
   2. Structural shapes:
      a. American Grating
      b. Enduro Composites.
      c. Fibergrate Composite Structures, Inc.
      d. Strongwell Corporation.

2.2 MATERIALS

A. Fiberglass Reinforced Plastic (FRP):

1. Flame Retardant Vinyl Ester Resin System.
2. Resin type shall be confirmed and certified by manufacturer to be appropriate for in-place chemical exposure.
3. Color: Safety yellow.

B. Fasteners, Clips, Saddles, and Miscellaneous Components:
1. Fiberglass where possible.
2. Type 316 stainless steel may be used if fiberglass component is not available.

C. Adhesive: Recommended by manufacturer.

D. Skid-resistant Surfacing: Manufacturer-applied abrasive grit coating.

E. All pultruded grating shall be constructed of strand roving, transverse mat, and a synthetic surface veil, including ultraviolet (UV) light inhibitors.

F. Gratings shall be reinforced with continuous strand roving, not exceed 35% of grating weight in order to provide optimal corrosion resistance and impact strength.

2.3 PERFORMANCE CRITERIA

A. The manufacturer shall furnish grating and supports to conform to the following criteria:
1. General Use Grating:
   a. Design Loads: Uniformly Distributed Load of 300 psf and 2,000 lbs. Concentrated Load on 12-inch by 12-inch area.
   b. Covered rectangular Mesh Grating:
      1) Pattern: 1.5-inch on center maximum.
      2) Thickness: 1.5-inches minimum.
      3) Fine grit surface
   c. Maximum Clear Span Deflection (under uniform load) 1/200 of span or 1/4-inch at four-feet, whichever is smaller.
   d. Fire Resistance: 25, ASTM E 84; self-extinguishing ASTM D 635.
   e. Chemical resistance.
      1) System shall be capable of withstanding splash and spillage of the following chemicals:
         a) Hydrogen Sulfide Dry/Wet Gas at 115 deg F.
   f. Sheet size: Grating sheet size shall be sized to be removed from access hatch, CONTRACTOR to coordinate structure access hatch size to determine maximum grating sizes. Grating shall be 5-ft square maximum to allow for removal due to weight, manufacturer shall design support system based on the 5-ft maximum sheet size requirements for the entire grating area as shown per the Drawings.

B. The manufacturer shall furnish pultruded structural shapes to have the minimum longitudinal mechanical properties listed below:
   1. Tensile Strength: ASTM D 638, 30,000 (206) psi, (MPa).
   2. Tensile Modulus: ASTM D 638, 2.5 x 106 (17.2) psi, (GPa).
   3. Flexural Strength: ASTM D 790, 30,000 (206) psi, (MPa).
   4. Flexural Modulus: ASTM D 790, 1.8 x 106 (12.4) psi, (GPa).
   5. Flexural Modulus (Full Section): ASTM D 790, 2.8 x 106 (19.3) psi, (GPa).
   6. Short Beam Shear (Transverse): ASTM D 2344/D 2344M, 4,500 (31) psi, (MPa).
   7. Shear Modulus (Transverse): 4.5 x 105 (3.1) psi, (GPa).
   8. Coefficient of Thermal Expansion: ASTM D 696, 4.4 x 10-6 (8.0 x 10-6) in/in/°F (cm/cm/°C).
   9. Flame Spread: ASTM E 84, 25 or less.

2.4 FABRICATION

A. Use materials of the minimum size and thickness as specified above, unless otherwise shown on the Drawings. Work to the dimensions shown on approved Shop Drawings.

B. Grating and support framing system shall be provided and designed by the grating manufacturer, and shall be coordinated with the piping and electrical conduit locations, and shall comply with the standards of the Reinforced Plastic/Composites Institute, except as specified herein.
   1. Grating manufacturer shall provide structural drawings for the grating support system stamped by a licensed structural engineer in the state of Arizona.
   2. Grating support system shall be fiberglass reinforced plastic with stainless steel Type 316 anchor bolts and nuts.

C. Grating Fabrication:
   1. Grating supplied shall meet the dimensional requirements and tolerances as shown on the Drawings or specified. Provide field measurements for the Work fabricated to conform to field conditions.
   2. Each grating section shall be readily removable, except where shown on the Drawings. Gratings shall be fabricated free from warps, twists, or other defects which affect appearance and serviceability.
   3. All shop fabricated grating cuts shall be coated with vinyl ester resin to provide maximum corrosion resistance.
   4. Provide Type 316 stainless steel hold-down clips spaced as recommended by the manufacturer.

D. Support Framing Member Fabrication:
   1. Structural grating shapes supplied shall be 5-ft square maximum and meet the minimum dimensional requirements as shown on the Drawings or specified.

Provide field measurements for the Work fabricated to conform to field conditions. Determine correct size and locations of required holes or coping from field dimensions prior to structural shape fabrication.

2. All shop fabricated cuts or drilling shall be coated with vinyl ester resin to provide maximum corrosion resistance.
3. Provide Type 316 stainless steel bolts.

PART 3 - EXECUTION

3.1 INSTALLATION

A. Fastening to In-Place Construction: Provide Type 316 stainless steel anchorage devices and fasteners to secure grating to supporting members or prepared openings, as recommended by the manufacturer or as shown on the Drawings.

B. Cutting, Fitting and Placement:
   1. Perform all cutting, drilling and fitting required for installation. Set the Work accurately in location, alignment and elevation, plumb, level, true and free of rack. Do not use wedges or shimming devices.
   2. Make cutouts or openings in the field as approved by ENGINEER.
   3. All grating which requires cutting during installation shall have the effected surfaces sealed with catalyzed resin sealant of equal or superior corrosion resistance to the grating as recommended by the manufacturer.
   4. Secure grating, to fiberglass structural members, as specified by the manufacturer.
   5. Fit exposed connections accurately together to form tight joints.
   6. Secure edges of grating to each other with end panel clips.
   7. Secure clips to grating with Type 316 stainless steel bolts such that the grating shall act as a unit, or as shown on the Drawings. Place bolts not more than 3-inches from each plate section end and not more than 24-inches on center, or as shown on the Drawings.

C. Installation of Grating:
   1. Install gratings in accordance with manufacturer's assembly drawings. Lock grating panels securely in place with hold-down fasteners as specified herein. Follow manufacturer's instructions when cutting or drilling fiberglass products or using resin products. Provide adequate ventilation.

++ END OF SECTION ++

SECTION 06614

FIBERGLASS REINFORCED PLASTIC STOP LOGS

PART 1 - GENERAL

1.1 DESCRIPTION

A. Scope:
   1. Provide all labor, materials, equipment and incidentals as shown on the Drawings, specified and required to furnish FRP stop logs, FRP guide frame, and lifting device.

B. Related Sections:
   1. It is the CONTRACTOR's responsibility for scheduling and coordinating the work or subcontractors, suppliers, and other individuals or entities performing or furnishing any of the CONTRACTOR's work.
   2. The following Sections are related to the Work described in this Section. This list of Related Sections is provided for convenience only and is not intended to excuse or otherwise diminish the duty of the CONTRACTOR to see that the completed Work complies accurately with the Contract Documents.
      a. Section 03252, Anchorage in Concrete.

1.2 QUALITY ASSURANCE

A. Equipment shall be the latest design of a manufacturer engaged in the production of equipment of this type with a minimum of 20 years experience designing and manufacturing stop logs.

B. Frames, logs, and beams shall be by one manufacturer.

C. Manufacturer must provide warranty for 25 years against failure due to corrosion.

1.3 REFERENCES

A. Comply with applicable provisions and recommendations of the following, except as otherwise shown or specified.
   1. ASTM A193, Stainless Steel Anchor Bolts
   2. ASTM A276, Stainless Steel Bars
   3. ASTM D256, Izod Impact Strength
   4. ASTM D570, Water Absorption Rate
   5. ASTM D638, Tensile Strength
   6. ASTM D695, Compressive Properties of Rigid Plastic
   7. ASTM D696, Coefficient of Linear Expansion
   8. ASTM D790, Flexural Properties
   9. ASTM D1056, Polymer Grade

10. ASTM D2583, Indentation Hardness
11. ASTM D2563-0, Visual Defects
12. ASTM D2584, Resin, Glass & Filler Content
13. AWWA C-563, Leakage Rate

1.4 SUBMITTALS

A. Shop Drawings: Submit for approval the following:
   1. Shop drawings with complete description of all materials including the material thickness of all structural components of the stop logs, guide frames and stop log lifting assembly.
   2. Manufacturer's installation instructions showing all details of construction, details required for installation, dimensions, and anchor bolt locations.
   3. Design calculations: Submit calculations and design data to substantiate conformance with requirements indicated on the Drawings and specified in the specifications, including stop log load and deflection criteria.
   4. Certificates: Submit manufacturer's certificates reporting the result of leakage tests performed on stop logs.
   5. Refer to and comply with the requirements of Section 01332, Shop Drawing Procedures.
   6. CONTRACTOR shall submit an electronic copy per Specification Section 01332, Shop Drawing Procedures.
   7. A copy of this specification section, with addendum updates included, and all referenced and applicable sections, with addendum updates included, with each paragraph check-marked to indicate specification compliance or marked to indicate requested deviations from specification requirements. Check marks shall denote full compliance with a paragraph as a whole. If deviations from the specifications are indicated, and therefore requested by the CONTRACTOR, each deviation shall be underlined and denoted by a number in the margin to the right of the identified paragraph, referenced to a detailed written explanation of the reasons for requesting the deviation. The ENGINEER shall be the final authority for determining acceptability of requested deviations. The CONTRACTOR shall furnish equipment and/or services as specified if an exception and/or deviation is rejected. The remaining portions of the paragraph not underlined will signify compliance on the part of the CONTRACTOR with the specifications. Failure to include a copy of the marked-up specification sections, along with justification(s) for any requested deviations to the specification requirements, with the submittal shall be sufficient cause for rejection of the entire submittal with no further consideration.

1.5 DESIGN REQUIREMENTS

A. Design, fabricate, and test stop log or stop gate system and materials in accordance with the manufacturer’s procedures and assuming full pipe flow.

B. Stop log or slide gate systems shall meet AWWA C-563 leakage requirements.

1. Maximum allowable leakage of stop logs with seating head shall not exceed 0.10 GPM/FT of wetted linear seal area under full design head when installed in manufacturer's Guide Frames.

C. Stop log or slide gate panel shall be fiberglass reinforced polymer (FRP).

D. Composition of the stop log laminate shall be in accordance with the recommendations shown in the Quality Assurance Report for Reinforced Thermostat Plastic (RTP) Corrosion Resistant Equipment prepared under the sponsorship the Society of the Plastics Industry, Inc. (SPI) and the Material Technology Institute of the Chemical Process Industries, Inc. (MTI) for "Hand Lay-up Laminates" and shall meet the specifications for Type 1, Grade 10 laminates shown in Appendix M-1 of said report.
   1. Visual inspection for defects shall be made without the aid of magnification and defects shall be classified as shown in Table 1 Level II of ANSI/ASTM D2563-0, approved 1977, (or any subsequent revision).

E. Deflection
   1. Deflection across the stop log width shall be limited to: L/360 or ¼" (6mm), whichever is less, at the maximum operating head.

F. Head Pressure
   1. Stop log system shall be designed for a maximum head pressure as per gate schedule.

G. Stop log panel size as shown on the contact drawings and/or gate schedule.

H. Surface Conditions
   1. All stop log panels shall be flat and level.
   2. Warpage throughout the entire stop log panel shall not produce a crown of more than 1/16" (1.6mm) in any direction.

PART 2 - PRODUCTS

2.1 MANUFACTURERS

A. Manufacturer: One of the following or equal:
   1. Plasti-Fab, Inc.
   2. Approved equal

2.2 MATERIALS

A. FRP stop logs or slide gate shall meet the following requirements:
   1. FRP resin shall be vinyl ester.
   2. Guide frames to be vinyl ester FRP.
   3. Lifting pins to be T-316L stainless steel.
   4. Anchor bolts to be T-316L stainless steel.

5. Lifting beam to be T-316L stainless steel.
6. Storage rack(s) to be vinyl ester FRP.
7. Seal material shall be EPDM.
8. The stop logs shall be free of any cracks, crazing, blistering, chips, pits, dry spots, fisheyes, burned areas, entrapped air, surface porosity, exposed glass or steel reinforcing, and foreign material.
9. The stop logs shall not have any wrinkles or solid blisters exceeding 1/8 inch.
10. Guide frame shall be embedded to precast manhole base as part of the manhole base casting manufacturing process.

B. Physical Properties
1. Structural characteristics for FRP glass mat laminates shall meet the following minimum physical properties:

Tensile strength	15,000 psi (1034 ksc)
Flexural Modulus	1,000,000 psi (70307 ksc)
Flexural Strength	20,000 psi (1406 ksc)
Compressive Strength	22,000 psi (1547 ksc)
Impact Strength	9.0 ft-lbs/in. (1.24
Water absorption	0.13% (in 24 hours)

2. Seals: Extruded EPDM seals shall have the following physical characteristics:

Specific Gravity	1.25
Hardness	55 – 65 Shore A Durometer
Tensile Strength	1500 psi min. (0.07ksc)
Elongation	300%
Low temperature brittleness	- 40°

2.3 FABRICATION

A. Stop logs:
1. The stop log shall be fabricated by means of vacuum infusion so as to totally encapsulate the internal structural matrix and protect it against corrosion from moisture or chemical deterioration with a minimum thickness of ¼ inch (6mm) FRP on the front and back facings, and ¾ inch (19mm) FRP on the remaining perimeter. Stop logs shall be designed so that the maximum fiber stress (ultimate or yield, whichever applies) shall exceed 2.5 times the working stress. Stop logs shall be suitably reinforced to withstand the maximum seating head with a deflection less than ℓ/360 of the stop log width, or ¼ inch (6mm), whichever is less. Stop log covers that are fabricated from pressed or laminated sheet material and/or glued/bonded to a substructure shall not be acceptable. No seams or joints that may allow water intrusion will be acceptable. Each Stop Log shall be molded individually to the exact dimensions specified.
2. Stop Log shall be manufactured of reinforced thermoset plastic in the form of FRP.
3. Stop Log shall have UV Stabilizing pigment in the Resin to provide long-term protection from UV.
4. The surface shall be resin rich to a depth of 0.010 inches (2.5mm) to 0.020 inches (5mm) and reinforced with C-glass or polymeric fiber surfacing material.

5. The surface shall be free of exposed reinforcing fibers.
6. The composition of these layers shall be approximately 95% (by weight) resin. The remaining laminate shall be made up of copolymer composite and reinforcing fibers in a form, orientation and position to meet the mechanical requirements.
7. Structural reinforcing shall be utilized to attain the necessary stiffness to meet deflection requirements, and shall be well encapsulated with a laminate not less than ¼" (6mm) thick on each side to ensure against any permeation by water to the core areas. . Internal steel structure to be welded per ASME/ASTM standards, sandblasted and coated with vinyl ester resin immediately prior to vacuum infusion in order to ensure complete bonding with external corrosion barrier.
8. T-316L stainless steel lifting pins shall be attached to the stop log by passing completely through the log. Stainless steel lifting pin shall be fastened to the log with sufficient reinforcing to withstand the lifting force. Lifting pins attached to the surface of the log are not acceptable. The through holes shall not pass through or be in contact with the internal steel reinforcing.
9. Core material must be 100% resistant to decay and attack by fungus and bacteria and be resistant to hydrocarbons.
10. To assure maximum service life, the copolymer composite shall be ultraviolet stabilized and seamless to protect inner structural members from corrosion.
11. Metal, concrete, or wood stop logs subject to corrosion/bacterial breakdown/rot shall not be acceptable alternatives to composite FRP material.
12. Stop Log panels shall be manufactured using advanced technology vacuum infusion resin transfer processes. The closed mold vacuum process must completely evacuate all air from the mold prior to infusing the mold with premium quality resin as specified. The vacuum infusion process must eliminate the potential of air entrapment and/or voids in the matrix of the stop log panel (which cause defects and performance-detracting irregularities) thus producing a finished product that is one-piece, seamless and uniformly impenetrable by fluids eliminating interior corrosion. Stop Logs produced by techniques that employ adhesives or mechanical fasteners to attach individual panels to a pre-fabricated framework resulting in seams along vertical and horizontal axes of the stop log which create stress-potential areas, portals for fluid infiltration, subsequent de-lamination and product failure due to corrosion.

B. Seals
1. The stop logs shall be equipped with elastomeric bottom seals to seal between the logs. Seals shall be made of molded EP, per ASTM D- 2000 having a hardness of 55 – 65 Shore A Durometer, conforming to ASTM D-2000, with a maximum compression set of 25%, and low temperature brittleness to meet suffix F-17 (- 40oF/C).

C. Guide Frames
1. Guide frames shall be styled for embedded guide frames as shown on the contract drawings and/or stop log schedule.
2. Guide frames shall be fabricated from vinyl ester FRP and shall have a slot suitable for mating with the stop log panels.

2.4 PORTABLE CRANE

A. Product and manufacturer: Provide one of the following:
   1. Thern
      a. Davit Crane Commander 2000; Model 5PT20-E2 must have extended mast (5-inches) and hydraulic cylinder to be able to adjust hook reach under load
      b. Galvanized finish
      c. Flush Mount Base; Model 5BF20
      d. Base Extension; Model 5BE20-15
      e. 304 Stainless Steel Wire Rope; Model WS25-45NS
      f. 304 Stainless Steel Base Anchor Kit; Model AN50A-5S
   2. Approved equivalent

B. Qualified manufacturer representative shall provide one, four (4) hour training session for city operations staff.

C. Manufacturer shall provide a certification of proper installation and provide copies to the OWNER, ENGINEER, CONTRACTOR, and manufacturing facility.

PART 3 - EXECUTION

3.1 INSTALLATION

A. Thoroughly clean and remove all shipping materials prior to setting.

B. Install stop log systems per Manufacturer’s recommendations.

C. Manufacturer shall provide a certification of proper installation and provide copies to the OWNER, ENGINEER, CONTRACTOR, and manufacturing facility.

D. Qualified manufacturer representative shall provide one, four (4) hour training session for city operations staff.

E. Testing:
   1. After stop logs are installed, conduct field leakage tests at specified operating conditions.
   2. The manufacturer shall certify in writing that the field leakage test is within the allowable leakage limits.

Stop Log Schedule						
Reference Drawing	**Width of Opening (Inches)**	**Height of Each Log (Inches)**	**Number of Logs**	**Design Pressure, Seating, Feet**	**Design Pressure, Unseating, Feet**	**Remarks**
M-2.0/ M-2.2	74	24 12	3 1	7	7	Each pipe opening to have three (3) 24” tall logs and one (1) 12” tall log
M-3.0/ M-3.6	74	24 12	3 1	7	7	Each pipe opening to have three (3) 24” tall logs and one (1) 12” tall log

++ END OF SECTION ++

SECTION 09910

SPECIAL FINISHES

PART 1 - GENERAL

1.1 SUMMARY

A. CONTRACTOR shall provide all labor, materials, equipment, services, and incidentals required to furnish and install corrosion resistant coatings for the sanitary sewer manhole rehabilitation as specified herein.

1.2 SECTION INCLUDES

A. Corrosion resistant coating.

1.3 SUBMITTALS

A. Submit the following for approval:
   1. Letters of Certification of Compliance on materials, equipment, etc.
   2. Identify product name and number, manufacturer and local distributor name, address, and telephone number.
   3. Samples.
   4. Operating and/or service manuals, and all other data pertinent to operating or servicing the complete apparatus. Include detailed procedures for light repairs such as dents and scratches.
   5. Manufacturer’s installation methods:
      a. Safety data sheets (SDS)
      b. Maximum storage life and storage requirements
      c. Mixing and proportioning requirements
      d. Environmental requirements for application and worker safety, including ventilation, humidity, and temperature ranges
      e. Application film thickness PM coat of primer and finish coat
      f. Curing time required
   6. Identify manufacturer's recommended, published spreading rate and dry film thickness of each coating material proposed for use.
   7. Mixing instructions, shelf life, method of application, recommended number of coats, and drying time.
   8. General bulletins and catalog cuts describing complete coating system, including all principles and fundamentals.
   9. Materials of construction of all components.
   10. Material gradation, design mix, job mix formula, and/or material analysis.
   11. Copies of the CONTRACTOR'S proposed protection procedures in each area of Work.
   12. Sample of finished product showing final color: Coating shall be light in color.

13. A written certification of the applicator's qualifications to the ENGINEER for approval. Applicator shall be an Arizona licensed contractor. Each of the applicator's employees applying coatings and underlayment's shall be certified by the manufacturer as having sufficient training and knowledge to properly apply their products
14. Quality Assurance and Testing Reports.

1.4 PRODUCT DELIVERY, STORAGE, AND HANDLING

A. All surface coating materials shall be delivered to the job site in original sealed containers and shall be used directly from these sealed containers.

B. All containers shall have the following labels naming title of material, manufacturer's name and stock number, contents by volume, color name and number, and application instructions.

C. All surface coating materials shall be stored in an area according to manufacturer's recommendations.

D. The storage area shall be kept neat and clean. Floors and other surfaces shall be adequately protected. Any damage caused by the CONTRACTOR to surfaces in the storage area shall be thoroughly cleaned and repaired.

E. All oily rags, waste, etc., shall be placed in a covered material container and removed by the CONTRACTOR at the end of each shift.

1.5 QUALITY ASSURANCE

A. Corrosion resistant coating manufacturer and applicator shall have at least five years experience in production and coating applications, respectively.

B. Certify long-term compatibility of all coatings with all substrates.

C. Provide the services of a qualified manufacturer's representative at the Project site for a minimum of two trips. Within seven calendar days after inspection by the manufacturer, the CONTRACTOR shall provide a written report from the manufacturer certifying the coatings have been applied properly and in accordance with the manufacturer's recommendations and requirements. Deficiencies in the coating system, if any, noted by the manufacturer during final inspection shall be defined in the manufacturer's report including corrective measures to be implemented by the CONTRACTOR at the CONTRACTOR'S expense. Following corrective measures by the CONTRACTOR, the manufacturer shall re-inspect the Work. Within seven days after re-inspection, provide a written report form the manufacturer certifying the coatings have been applied properly and in accordance with the manufacturer's recommendations and requirements.

G. Maintain a Coating Application Log containing the information. The Paint Application Log shall be maintained on a daily basis for all areas where the Work is being performed. The Paint Application Log shall be turned over to the ENGINEER the following day that the work was performed. The log shall include the following:
   1. Date.
   2. Time.
   3. Weather condition (at work location).
   4. Air temperature (at work location).
   5. Surface temperature (at work location).
   6. Dew point (at work location).
   7. Humidity (at work location).
   8. Material temperature (Before (Separately) and Mixed (Combined)
   9. Location/area square footage.
   10. Description of Work performed.
   11. Materials used, colors and batch numbers, quantity of materials used (not including waste).
   12. Application/surface preparation equipment and personnel.
   13. WFT/surface profile measurements.
   14. Comments, quality control procedures.
   15. Signature/title.

1.6 WARRANTY

A. The corrosion resistant coating manufacturers shall warrant the products being supplied to the OWNER against defects for a period of five years under normal use. The warranty shall be in printed form.

B. Warranty Period Inspection:
   1. OWNER may conduct inspection at any time prior to five (5) years following completion of new coating work and /or repaired coating work. CONTRACTOR and representative of coating manufacturer shall be notified of any apparent coating failures. Defective work or coating failures shall be repaired in accordance with this specification and to the satisfaction of OWNER.
   2. If warranty inspections are not held, CONTRACTOR is not relieved of responsibilities under Contract Documents.

PART 2 - PRODUCTS

2.1 PRODUCTS FOR COATINGS

A. Sanitary sewer manhole rehabilitation:
   1. Sauereisen Sewergard 210TN; Troweled Industrial coating

2. Sewer Shield 100
3. Or equal.

2.2 MATERIALS

A. Rehabilitated Sewer Manholes:
   1. Product shall be applied in one layer to a minimum of 250 mils dry film thickness after the concrete filler/sealer has been applied (or as required by the coating manufacturer and approved by the ENGINEER) to the concrete surfaces. In floor coatings, CONTRACTOR shall incorporate silica sand or other approved natural or synthetic grit to provide a slip-resistant surface. The additive shall be mixed in the coating compound prior to application.
   2. Product shall be applied in combination with FRP per specification 02720 - Fiber Reinforced Polymer

PART 3 - EXECUTION

3.1 SAFETY

A. The CONTRACTOR shall perform all surface preparation and application of the coatings as described below. All surface preparation and coating application shall be in compliance with all applicable Federal, State, and local occupational safety, health, and air pollution control regulations. All safety precautions recommended by the manufacturer in printed instructions or special bulletins, and as required by applicable regulations. The CONTRACTOR shall provide forced ventilation in all areas where inadequate ventilation exists.

3.2 SURFACE PREPARATION

A. New concrete shall cure as required for an acceptable surface to apply coating system as determined by the coating manufacturer. Testing the new concrete to determine whether it is acceptable for a coating system includes capillary moisture in accordance with ASTM D4263 and further testing in accordance with ASTM F1869 if moisture is detected and ground water intrusion is suspected. Test for moisture content of concrete surfaces before commencement of painting Work. There are many tests for moisture in concrete such as ASTM D 4263, ASTM F 1869 or ASTM F 2170. Provide from the submitted coating manufacturer in writing as to which standard they want used and what results must be obtained for satisfactory compliance. Report results to ENGINEER before starting Work.

B. The concrete shall be prepared in accordance with SSPC/NACE Preparation of Concrete. The concrete surface shall be abrasive blast cleaned in accordance with ASTM D4259 to a uniform texture of 50-60 grit sandpaper and a surface profile of 4-6 mils. When sandblasting a surface to be coated, the CONTRACTOR shall

protect all surrounding surfaces from sustaining any damage. All surfaces to be sound, clean, dry, and free of all contaminants prior to application of the coating system. Patch all holes as recommended by the coating manufacturer.

C. Test for moisture content of concrete surfaces before commencement of painting Work. There are many tests for moisture in concrete such as ASTM D 4263, ASTM F 1869 or ASTM F 2170. Provide from the submitted coating manufacturer in writing as to which standard they want used and what results must be obtained for satisfactory compliance. Report results to ENGINEER before starting Work.

D. Verify that the pH levels, of the cleaned concrete surfaces to be coated, are 10 to 12 or within the coating manufacturers' current written acceptable range. The pH of the concrete substrate will be measured using pH indicating papers. The pH testing is to be performed once every 50 square feet (5 square meters). Acceptable pH values can be measured using color indicating pH paper with readable color calibrations and a scale at whole numbers (minimum). Use Hydrion Insta-Check Jumbo 1-12, or equal. The paper shall be touched to the surface once using moderate gloved finger pressure. The surface shall not be wiped or moved laterally to disturb the surface during pH testing. Following the one touch, lift the paper vertically to not "wipe" the surface. Compare the color indicated with the scale provided and record the pH. Spot check any areas that may be questionable with phenolphthalein solution. Where paint system is used to provide chemical containment barrier protection, repair cracks and expansion joints in concrete and provide 2-inch radius cove base fillets at all equipment pads and containment walls as part of the complete chemical containment paint system Work. Use materials and techniques recommended by the specified Manufacturer.

E. Remove all projections, tie wire, nails and other surface irregularities, which would protrude above the level of finished intermediate fillers and surfacers by chipping and scarification by mechanical abrasion.

F. Using specified filler and surfacer, patch all concrete and precast concrete surfaces as required to completely fill surface air holes and honeycombing. Level all protrusions and grind filler and surfacing compounds smooth and level with adjacent surfaces.

G. Where concrete masonry unit block filler is specified, spot patch holes and cracks with a putty knife using specified block filler to provide smooth finish for large surfaces coating materials can be applied by airless spray and backroll uniformly using a roller with a synthetic nap cover. While the coating material; is still wet a rubber squeegee can be used to provide a smooth finish.

3.3 INSTALLATION

A. The corrosion resistant coating shall be applied by a coating applicator specialist qualified to apply the coating in accordance with the manufacturer's specification.

B. Do not open containers or mix components until necessary preparatory work has been completed and application work will start immediately.

C. Handling of materials before, during, and after application in such a manner as to prevent inclusion of foreign materials.

D. All interior spaces of the rehabilitated sewer manhole shall be coated as described in the drawings.

E. Prior to Coating Installation, CONTRACTOR shall perform adhesion testing of the concrete per ASTM C 1583.

F. Use only application methods approved by the manufacturer.

3.4 TESTING

A. Contractor shall give ENGINEER a minimum of three days advance notice before the start of any surface preparation, underlayment application work, coating application work or testing.

B. All testing shall be performed in presence of ENGINEER.

C. Acceptance for holiday testing, adhesion testing and dry film thickness testing shall be witnessed by an independent Testing Agency or Laboratory approved by the OWNER. Costs of this inspection and Testing shall be the responsibility of the CONTRACTOR. At OWNER's option, OWNER may waive requirement of CONTRACTOR provided testing agency or laboratory and have ENGINEER witness this testing.

D. Additional illumination, scaffolding, and permit required confined space entry equipment and support shall be provided by CONTRACTOR as necessary to facilitate inspection by ENGINEER and/or Testing Agency when requested.

E. Holiday testing equipment and procedures shall be in strict accordance with the latest edition of NACE "Standard Recommended Practice-Discontinuity (Holiday) Testing of Protective Coatings." and ASTM D4787-13. Areas containing holidays shall be marked repaired or recoated and re-tested in accordance with coating manufacturer's printed instructions.
   1. Holiday detectors shall be high voltage plus-type detectors as manufactured by Tinker & Rasor or D.E.Sterns Co. Unit Shall be adjusted to operate at voltage

required to cause sparks jump across air gap equal to twice specified coating thickness.

F. Dry film thickness measurements shall be provided by report submitted by CONTRACTOR to ENGINEER. The report shall be presented after completion of underlayment, top coating operations and shall state number of manufacturer's product units used and total square footage of surfaced area covered. ENGINEER shall have option of requiring CONTRACTOR to document number of units (coating materials) on hand before and after coating operations to verify actual minimum dry film thickness applied
   1. All film thickness not meeting required minimum will be recoated per manufacturer's recommendations to required minimum 250 mil thickness.

G. CONTRACTOR shall perform adhesion test on 15% of coated surface areas. Adhesion tests shall conform to ASTM D7234, minimum pull off strength of 200 psi concrete. A minimum pull off strength of 150 psi on concrete will be acceptable if substrate is adhered to coating and dolly on more than ½ the area of the dolly. 50mm dollies shall be used for adhesion testing. In the event of a failure, ENGINEER and CONTRACTOR shall determine limits of failure through additional investigation, sounding and pull tests. Failed areas shall be removed and repaired in accordance with these specification and manufacturer's recommendations. Repaired area shall undergo testing as specified herein.

3.5 CLEAN-UP

A. During progress of the Work, remove from the site all discarded materials, rubbish, cans or buckets, and rags at the end of each Work day.

B. Upon completion of the Work, clean all coating-spattered surfaces. Remove spattered coating by proper methods of washing and scraping, using care not to scratch or otherwise damage surfaces.

C. At the completion of Work of other trades, touch-up and restore all damaged or defaced coated surfaces as determined by the ENGINEER.

D. Ensure that all Federal, State, and Municipal laws and regulations are met during the disposal of coating material or any other hazardous material associated with the coating process.

++ END OF SECTION ++

SECTION 13210

POLYMER CONCRETE STRUCTURES

PART 1 - GENERAL

1.1 DESCRIPTION

A. Scope:
   1. The purpose for this Technical Specification is to provide the requirements to furnish and install the polymer concrete structure(s). The structure is comprised of a base, barrel, and lid segments as a multi-piece designed unit constructed and installed in a manner consistent with acceptable manufacturing and construction techniques and practices.
   2. This Technical Specification covers the work necessary to furnish and install polymer concrete structures. The CONTRACTOR shall be licensed in the State of Arizona. The CONTRACTOR shall deliver polymer concrete structure(s) including all materials, labor, equipment, and services necessary for product installation, all quality controls and samples for performance of required material tests, final inspection and warranty work, all as specified in these Contract Documents. Anticipated work to be provided also includes all traffic control, bypass pumping and/or diversion of sewage flows (as necessary), and removal and replacement of affected existing grade to existing condition or to OWNER's standards, whichever is greater.
   3. The prices submitted by the CONTRACTOR shall include all costs of permits, labor, equipment, and materials for the various bid items necessary for furnishing, transporting and installing complete in place, the polymer concrete structure(s), in accordance with these Technical Specifications. All items of work not specifically mentioned herein which are required to make the product perform as intended shall be included in the respective lump sum and/or unit price bid items depicted in the Guaranteed Maximum Price (GMP).

1.2 SAFETY REQUIREMENTS

A. The CONTRACTOR shall conform to all work safety and health requirements of pertinent regulatory agencies. The CONTRACTOR shall perform existing material testing as required by regulatory requirements and erect such signs and other devices as are necessary and be responsible for safety at the work site.

1.3 NOTIFICATION

A. It shall be the CONTRACTOR's responsibility to notify all utility companies involved whenever a utility is to be cut, tapped, moved, or in any way disturbed from its original placement. Sufficient notice shall be given to the utility company so that its users can be

informed of any disruption of service. Such notice shall be given no less than 48 hours in advance.

B. It is the CONTRACTOR's responsibility to inform the city of construction activities which may lead to interruption in sewer service. The CONTRACTOR shall provide 72-hour notice prior to construction in order for the CONTRACTOR to alert all applicable residents.

1.4 QUALITY CONTROL

A. REFERENCES:
1. ASTM C33: Specification for Concrete Aggregates
2. ASTM C273: Standard Test Method for Shear Properties of Sandwich Core Materials
3. ASTM C478: Standard Specification for Precast Reinforced Concrete Manholes Sections (Structural intent only)
4. ASTM C478: Standard Specification for Circular Precast Reinforced Concrete Manhole Sections
5. ASTM C497: Test Methods for Concrete Pipe, Manhole Sections, or Tile
6. ASTM C579: Standard Test Methods for Compressive Strength of Chemical-Resistant Mortars, Grouts, Monolithic Surfacings, and Polymer Concretes
7. ASTM C581: Practices for Determining Chemical Resistance of Chemical Thermosetting Resins Used in Glass-Fiber Reinforced Structures Intended for Liquid Service.
8. ASTM C582: Plastic Laminate
9. ASTM C587: Standard Practice for Minimum Structural Design Loading for Underground Utility Structure
10. ASTM D543: Test Method for Resistance of Plastics to Chemical Reagents
11. ASTM D638: Standard Test Method for Tensile Properties of Plastics
12. ASTM D695: Standard Test Methods for Compressive Properties of RigidPlastics
13. ASTM D790: Standard Test Methods for Flexural Properties of Unreinforced and Reinforced Plastics and Electrical Insulating Materials
14. ASTM D1244: Standard Test Method for Concrete Sewer Manholes by the Negative Air Pressure (Vacuum) Test Prior to Backfill
15. ASTM D1622: Standard Test Method for Apparent Density of Rigid Cellular Plastics
16. ASTM D1623: Standard Test Method for Tensile and Tensile Adhesion Properties of Rigid Cellular Plastics
17. ASTM D2412: Test Method for Determination of External Loading Characteristics of Plastic Pipe by Parallel Plate Loading
18. ASTM D2583: Standard Test Method for Indentation Hardness of Rigid Plastics by Means of a Barcol Impressor
19. ASTM D2842: Standard Test Method for Water Absorption of RigidCellular Plastics

20. ASTM D3753: Standard Specification for Glass-Fiber Reinforced Polyester Manholes
21. ASTM D6783: Standard Specification for Polymer Concrete Pipe
22. AASHTO HS-20: Standard Specification for Highway Bridges Codes - AxleLoading
23. AWWA C950: Glass-Fiber Reinforced Thermosetting Resin Pressure Pipe

1.5 SUBMITTALS

A. The CONTRACTOR shall provide submittal information to the ENGINEER in accordance with Specification Section 01330, Submittals.

B. Polymer Concrete Structure Manufacturer's Qualifications: The manufacturer of the structure shall be able to show experience in the manufacture of polymer concrete structures for more than five (5) years.

C. Documentation of CONTRACTOR's Experience: CONTRACTOR shall provide references for all jobs within the last two (2) years that were either completed or under construction using the proposed installation method.

D. Installer's Qualifications: The installer shall be able to show experience in the installation of the proposed structure or manholes for more than five (5) years. References shall be provided for a minimum of five (5) jobs. Information provided shall include a description of the job, the location of the job, the value of the job, the OWNER name, and the OWNER contact person for the job including name, title, address, and phone number.

E. Submit Manufacturer's published product and installation literature and published quality control testing criteria data for the proposed structure.

F. Structural Calculations: The manufacturer shall submit structural calculations sealed by a registered ENGINEER in the State of Arizona, demonstrating the required reinforcement and other materials are adequate to resist the anticipated loading.

G. Submit independent test report showing that the physical properties of the proposed structure meet the requirements of these Technical Specifications and will meet or exceed the physical properties given in the manufacturer's published literature submitted as required by Part 2 – Products.

H. Submit a report outlining the proposed installation process and procedures as directed by the structure manufacturer to be used. The report shall include information specific to the installation instructions and any unique site condition(s) that must be taken into consideration including access coordination, installation timing and identification and any coordination requirements/requests from the city or others.

I. Shop Drawings: CONTRACTOR shall provide shop drawings of proposed materials for approval prior to ordering. Shop drawings shall depict:

1. All measurements made by the CONTRACTOR to verify structure critical dimensions including but not limited to depth and diameter along with any pipe penetrations or equipment hanger requirements.
2. Material(s) proposed for construction.
3. Product data sheets, catalog sheets, safety data sheets for components to be provided by a third party to be implemented into the structure.
4. Critical dimensions, jointing and connections, fasteners and anchors with sizes, spacing, and location, connections, attachments, and openings.
5. Anticipated grade adjustment ring(s) and height.
6. Frame and cover (to be city provided corrosion composite frame, cover and rings per Chandler Supplements to MAG Detail No. C-400 and C-401 Type “B”.

J. Warranty: CONTRACTOR shall submit warranty documents signed by an Officer of the Company and notarized stating the terms and conditions of the warrantee identified in Paragraph 1.9.

K. Any item the CONTRACTOR proposes to utilize as an "or equal" to that proposed in the Contract Documents.

1.6 SUBSTITUTIONS

A. Any item the CONTRACTOR proposes to substitute for a specified item as an "or equal" must be made in writing for review and approval by the city. Substitutions or deviations not approved by the city shall risk rejection and replacement at no additional cost to the city.
   1. For any proposed design change or deviation from these Technical Specifications.
   2. For anything in these Technical Specifications found to conflict with applicable codes and ordinances.
   3. For anything not understood by the CONTRACTOR.
   4. One (1) electronic copy of submittal(s) shall be provided to the city at least two (2) weeks before a determination is required.
   5. Submittals may be drawings, sketches, manufacturer's literature, catalog descriptions, or other descriptions in sufficient detail to allow a decision. The submittal shall indicate the amount to be added to or deducted from the contract price should the submittal be accepted.

1.7 QUALITY ASSURANCE/QUALITY CONTROL

A. Examination: Each structure component part shall be examined by the manufacturer before delivery and by the CONTRACTOR for dimensional requirements, soundness, and workmanship.

B. Composition Control: The manufacturer shall control the polymer concrete for each part of the structure fabrication. Documentation of the control checks shall be maintained by the manufacturer.

C. Testing Records: Records of all materials testing shall be kept, and copies of test results shall be submitted to the city in accordance with Paragraph 1.5.

1.8 INSPECTION POINTS

A. CONTRACTOR shall keep the city or ENGINEER informed of milestone progress on each of the following items:
   1. Start of excavation.
   2. Installation of base.
   3. Installation of stop log or slide gate system if included.
   4. Installation of access hatch and/or manhole rims and covers.
   5. Completion of backfill placement.

1.9 WARRANTY

A. The CONTRACTOR shall replace promptly and at no expense to the city, any materials which fail during the warranty period. Warranty work shall include all ancillary items including, but not limited to permits, traffic control, and flow control required to compete the installation. Warranty and durations are described below:
   1. Project Warranty: The CONTRACTOR shall warrant all materials and workmanship performed under this contract for a period of **one (1) year** from the date of final acceptance or as stated in the project Contract Documents whichever is longer.
   2. Materials Warranty: The structure shall be free of defects that will affect the long term life and operation. The CONTRACTOR shall warrant in writing all materials provided and work performed under this contract for a period of **five (5) years** from the date of formal acceptance.
   3. Structure: Material(s) shall be tested for a design life of a minimum of **fifty (50) years** against deterioration from H2S corrosion and typical chemicals found in municipal sanitary sewage.

PART 2 - PRODUCTS

2.1 POLYMER CONCRETE STRUCTURES

A. Sewer manholes and junction structures (except Junction Structure B) shall be manufactured using polymer concrete. Approved structure manufacturers:
   1. Armorock™ - Manufactured by Geneva Polymer Products: 3555 21st St, 9, Boulder City, NV (702) 479-1772
   2. Approved Equal

2.2 MATERIAL and DESIGN

A. This section is to provide minimum design and testing requirements for a barrel section and lid together.

B. The design of the structure shall be prepared and professionally sealed by an ENGINEER licensed in the State of Arizona. The polymer concrete structure(s) shall meet or exceed the requirements of buried manholes up to 40 feet deep without the use or reliance upon external or internal structural stiffeners. The design shall not allow infiltration of ground water.

C. It is the CONTRACTOR's responsibility to verify the measurements of the existing sewer connections prior to ordering the structures. The city and the ENGINEER are not responsible for manufacturing errors due to incorrect measurements. Modifying or cutting the structures in the field to adjust for incorrect measurements is not allowed.

D. Structure shall be designed and tested to withstand AASHTO HS-20 loading with no structural strength derived from the installation of external or internal structural stiffeners.

E. The manufacturer shall provide lifting points and instruction on how each component of the structure should be lifted to prevent damage.

F. Material shall be consistent throughout the structure consisting of resin and aggregate material, including reinforcement that is inert to corrosion from sewer gasses per ASTM D6783 - Standard Specification for Polymer Concrete Pipe (material mix design). Epoxy shall be 100% solids, solvent free, low odor emitting, environmentally friendly, and impervious to chemicals. Manufacturer shall determine the need for and type of reinforcement including that for safety and lifting requirements. Reinforcement, if determined necessary, shall be made of non-ferrous material.

G. The resins used shall be unsaturated, supplier certified commercial grade polyester resins. Mixing lots of resin from different manufacturers or "odd-lotting" of resins shall not be permitted. Quality-assurance records on the resin shall be maintained. Non-pigmented resin is required to allow for light or "sand" color of interior surface in order to facilitate ease of inspection from ground surface. UV inhibitors shall be added directly to resins to prevent degradation.

2.3 GRATE DESIGN SPECIFICATIONS

A. The grates shall be fiberglass reinforced polymer (FRP).
   i. FRP shall be vinyl ester per Specification Section 06611, Fiberglass Reinforced Plastic Gratings and Support Framing Members.

2.4 PORTABLE CRANE

A. The portable crane shall be per Specification Section 06614-2.4, Fiberglass Reinforced Plastic Stop Logs.

2.5 STOP LOGS AND/OR SLIDE GATE DESIGN SPECIFICATIONS

A. Stop logs and guide frames shall be per Specification Section 06614, Fiberglass Reinforced Plastic Stop Logs.

2.6 ACCESS HATCH SPECIFICATIONS

A. The access hatch shall be per Specification Section 05581, Floor Access Hatch Covers.

2.7 MARKING AND IDENTIFICATION

A. The structure shall be marked on both the interior and exterior with the following information:
   1. Manufacturer's Company Name identification.
   2. Date of Manufacture.
   3. Manhole wall thickness.
   4. Installation assist marks.

2.8 DELIVERY, STORAGE AND HANDLING

A. CONTRACTOR shall be responsible for any damage resulting from improper storage and/or handing. Damaged materials shall be replaced at no additional cost to the city.

B. Materials shall be handled in accordance with MAG 106.

C. Store all products according to manufacturer's recommendations until installation. Protect from construction traffic and damage.

D. During the loading, unloading, and storage, care should be taken to ensure that the structure pieces are not dropped or otherwise damaged.

E. The structure components should be stored on a smooth surface free of sharp objects.

F. If the structure is stored horizontally, the structure should be placed in such a way as to avoid damage and be braced.

PART 3 - EXECUTION

3.1 PROTECTION OF SITE

A. Except as otherwise provided herein, the CONTRACTOR shall protect from damage all fences, structures, sidewalks, utilities, trees, shrubbery, lawns, etc., during the progress of this work. All debris and unused materials shall be removed immediately upon completion of the work. The site shall be restored as nearly as possible to its original condition, including the replacement, at the CONTRACTOR's sole expense, of any facility or landscaping which has been destroyed or damaged beyond restoration.

3.2 UTILITIES

A. Unless otherwise indicated, the CONTRACTOR shall arrange for and provide any required utilities at his sole cost and expense. This includes but is not limited to water for compaction or testing, power for operating any equipment along with personnel sanitation facilities.

3.3 INSTALLATION

A. The CONTRACTOR shall install the structure in accordance with approved manufacturer’s techniques.

B. The installation of the structure shall have the following tolerances:
   1. Inverts of the flow through portion shall have a tolerance +/- 0.01 feet compared to the elevations indicated on the construction drawings.
   2. The invert of the branch portion shall have a tolerance of -0.05 feet compared to the elevation indicated on the construction drawings.
   3. Inverted slopes shall not be permitted even if meeting the tolerances above.

C. The manufacturer shall provide an authorized representative to be on-site during the installation process of the structure to assist the CONTRACTOR to ensure proper installation.

3.4 ACCEPTANCE

A. As a condition precedent to Final Acceptance of the work, CONTRACTOR shall certify the proper installation and testing of material provided under this section. Certification shall warrant that materials and installation are free of defects and/or workmanship and suitable for trouble-free operation under the conditions set forth in these Technical Specifications.

++ END OF SECTION ++

SECTION 13220

PVC LINER

PART 1 - GENERAL

1.1 DESCRIPTION

A. Scope:
This specification covers the supply and installation of a flexible PVC sheet liner with continuous locking extensions in cast-in-place structures to effectively protect the exposed concrete surfaces from corrosion. To accomplish this, the liner must be continuous and free of pinholes both across the joints and in the liner itself.

1.2 QUALITY ASSURANCE

A. Manufacturer's Qualifications: Manufacturer shall have a minimum of five years experience in the production of substantially similar materials and shall be able to show evidence of satisfactory service in at least five similar applications.

B. Installer's Qualifications: Lining shall be performed by a single Installer regularly engaged in installation of polyvinyl chloride liner on concrete surfaces by the liner manufacturer. Installer shall be certified (or licensed) as a qualified Liner Installer by the Liner Manufacturer.

1.3 SUBMITTALS

A. A copy of this specification section, with addendum updates included, and all referenced and applicable sections, with addendum updates included, with each paragraph check-marked to indicate specification compliance or marked to indicate requested deviations from specification requirements. Check marks (✓) shall denote full compliance with a paragraph as a whole. If deviations from the specifications are indicated, and therefore requested by the CONTRACTOR, each deviation shall be underlined and denoted by a number in the margin to the right of the identified paragraph, referenced to a detailed written explanation of the reasons for requesting the deviation. The ENGINEER shall be the final authority for determining acceptability of requested deviations. The remaining portions of the paragraph not underlined will signify compliance on the part of the CONTRACTOR with the specifications. Failure to include a copy of the marked-up specification sections, along with justification(s) for any requested deviations to the specification requirements, with the submittal shall be sufficient cause for rejection of the entire submittal with no further consideration.

B. Certificates: Submit certificates of compliance with referenced standards.

PART 2 - MATERIAL

2.1 MATERIAL

A. Plastic liner material shall be made from high polymer vinyl chloride resin, pigments and plasticizers, extruded under high temperature and pressure to form a dense, flexible and impervious sheet. PVC resin shall constitute not less than 99 percent, by weight, of the resin used in the formulation. Copolymer resins are not permitted. The liner surface shall not absorb or retain precipitated or crystalline materials. Liner system shall be impermeable to sewage gases and liquids and shall be non-conducive to bacterial or fungus growth. Liner shall be easily cleaned and maintained in a sanitary condition. Liner shall be resistant to oxidizing agents, sulfuric, phosphoric, nitric, chromic, oleic, and stearic acids; sodium and calcium hydroxides; ammonia, sodium, calcium, magnesium, and ferric sulfate, petroleum oils and greases, vegetable and animal oils, fats, greases and soaps. Liner shall have good impact resistance and shall have an elongation sufficient to bridge up to 1/4 inch settling cracks, which may occur after installation, without damage to the liner.

B. Liner shall have rows of "T" shaped ribs which protrude from the liner to mechanically bond the liner to the concrete being lined. Once cast into the structure, lining shall be permanently and physically attached to the concrete by the "T" shaped ribs and shall not rely on an adhesive bond. "T" shaped ribs shall have a minimum height of 0.375-inches not including the liner sheet. Rows of "T" shaped ribs shall have an approximate spacing of 2 1/2 inches measured center to center. "T" shaped ribs shall be of the same material as the liner and shall be integrally extruded with the sheet. Unsecured terminal edges of the liner sheet shall not extend beyond the base of the final row of "T" shaped ribs by more than 3/8 inch. Liner sheets shall have a nominal width of 48-inches and shall be supplied in lengths which minimize the number of joints.

C. Where shown on the Drawings, or where approved by ENGINEER, provide plain sheet liner. Plain sheet liner sheets shall have a nominal width of 44-inches and shall be supplied in lengths which minimize the number of joints.

D. Inside corners, outside corners, "heels" for interior corners, and "L" shaped terminal strips fabricated of plastic material similar to the plastic liner material shall be provided at all corners, and changes in direction of walls and slabs, and at terminations to provide a neat, gas tight installation. All joint, corner edge and other required strips shall be fabricated of the same material as the liner. Joint strips and exposed welding strips shall have minimum widths of 4-inches and 1 inch, respectively. Joint and exposed welding strips shall both

have beveled edges. All terminal bottom edges of the liner in walls of structures shall be sealed with a termination strip or other means approved by ENGINEER.

E. Minimum thickness of liner sheet and strips shall be as follows:
   1. Sheet with integral "T" shaped ribs: 0.065-inches.
   2. Sheet, plain: 0.094-inches.
   3. Joint strip: 0.075-inches.
   4. Weld strip: 0.094-inches.

F. Adhesive products and application procedures used in the liner installation shall be approved by the ENGINEER prior to use. Adhesive products shall be non flam-mable.

G. Cleaners used in the liner installation shall be approved by the ENGINEER prior to use. Cleaners shall be water soluble and non-detrimental to the liner.

H. Product and Manufacturer: Provide the following:
   1. T Lock and PVC Sheet Liner as manufactured by ArmorLok Liner as distributed by ArmorLok PVC Protective Linings, San Bernardino California.
   2. Or Approved Equal

2.2 PHYSICAL PROPERTIES

A. All plastic liner plate sheets, welding strips and other accessory items, shall have the following physical properties when tested at 77ºF±5º (25ºC±3º). Chemical resistance listed below.

PROPERTY	**TEST METHOD**	**MINIMUM REQUIREMENT**
Tensile Strength	ASTM D412-16	2200 PSI
Elongation	ASTM D412	200%
Hardness	ASTM D2240 Type D	50-60 1 sec. – 35-50 10 sec.
Tearing Strength	ASTM D1004 -13	=/>80 N/mm
Plasticizer Permanence	ASTM D1203-16	<1.0 %
Water Absorption	ASTM D570-98	<0.1 %

Pull Out Strength of Key	SSPWC 210.2.6.4.1	=/> 100lbs per linear inch
Brittle Point	D746	5 degrees F
CHEMICAL PROPERTY	**CONCENTRATION**	**MINIMUM REQUIREMENT**
Sulfuric Acid (H2SO4)	20%	+/- 0.1%
Sodium Hydroxide (NaOH)	5%	+/- 0.2%
Ammonium Hydroxide (NH4OH)	5%	+/- 1.0%
Nitric Acid (HNO3)	1%	+/- 0.1%
Ferric Chloride (FeCI3)	1%	+/- 0.2%
Sodium Hypochlorite (NaOCI)	1%	+/- 0.1%
Soap	0.10%	NA
Detergent	0.10%	NA
Bacteriological (BOD)	=/> 700 ppm	NA

B. Tensile specimens shall be prepared and tested in accordance with ASTM D412 using Die B. Weight change specimens shall be 1-inch (25-mm) by 3-inch (75-mm) samples. Specimens for testing of initial physical properties may be taken from liner sheet and welding strip at any time prior to final acceptance of the work.

C. Continuous locking extensions embedded in concrete shall withstand a test pull of at least 100 pounds per linear inch (1800 kg/m), applied perpendicularly to the concrete surface

for a period of one minute, without rupture of the locking extensions or withdrawal from embedment. This test shall be made at a temperature of 70º- 80ºF (21º - 27 ºC).

D. All plastic liner plate sheets, including locking extensions, all joint, corner and welding strips shall be free of cracks, cleavages or other defects adversely affecting the protective characteristics of the material. The ENGINEER may authorize the repair of such defects by approved methods.

E. The lining shall be repairable at any time during the life of the structure.

2.3 DETAILS AND DIMENSIONS OF BASIC SIZE SHEETS

A. Liner sheets shall be a minimum of 0.065 inch (1.65 mm) in thickness. Locking extensions (Tor D shaped) of the same material as that of the liner shall be integrally extruded with the sheet. Locking extensions shall be approximately 2 1⁄2 inches (67 mm) apart and shall be at least 0.375-inch (9.5 mm) high.

B. Sheets shall have a nominal width of 4 feet and a length of not more than 8 feet, except that longer lengths may be supplied on special order. Lengths specified shall include a tolerance at a ratio of ±1⁄2 inch (12 mm) for each 100 inches (2500 mm).

C. Special sized, factory pre-welded sheets are available on special order.

2.4 PIPE SIZE SHEETS AND ACCESSORIES

A. Pipe linings shall be supplied as pipe-size sheets, fabricated by shop-welding the basic-size sheets together. Shop welds shall be made by lapping sheets a minimum of 1⁄2 inch and applying heat and pressure to the lap to produce a continuous welded joint. Tensile strength measured across shop-welded joints in accordance with ASTM D412 shall be at least 2000 psi (14 MPa).

B. If required, strap channels shall be 1-inch (25-mm) wide maximum and formed by removing the locking extensions so that a maximum of 3⁄16 inch (5 mm) remains.

C. Welding strips shall be approximately 1-inch (25 mm) wide with a minimum width of 7⁄8 inch (22 mm). Thickness of weld strip shall be a nominal 1⁄8 inch (3 mm).

PART 3 - INSTALLTION

3.1 INSTALLATION OF LINING

A. General:
   1. Install liner in accordance with the recommendations of the manufacturer and the approved Shop Drawings. Coverage of the liner shall not be less than the minimum shown on the Drawings and described in this Section.
   2. Do not install when the ambient temperature is outside the acceptable installation range specified by the manufacturer, but under no condition shall the liner be installed when the ambient temperature is below 60°F.

3. All concrete liner sheets and strips shall be free of cracks, cleavages or other defects adversely affecting the protective characteristics of the material. Remove all defective liner material from the job site.

B. Positioning Liner:
1. Liner installed in walls shall have the "T" shaped ribs running vertically. In areas requiring termination strips, the bottom elevation of the liner shall be considered to be the lower edge of the termination strip.

C. Securing Liner:
1. Liner sheets shall be closely fitted and properly secured to the liner side of the forms. Nailing through the liner shall be minimized and nails shall be placed no greater than 1/8-inch from each liner sheet edge. Nail holes shall be patched with a 1-inch minimum weld strip. Adjacent sheets shall be butted with not more than a 1/8 inch opening between the sheets using a Type C 1, C-2 and P-1 joint as specified hereinafter. Where the liner must be bonded to metal, the metal shall be sandblasted to white metal (SSPC SP5) before application of the material.

D. Concrete Placement:
1. Carefully vibrate concrete poured against lining so as to protect the lining and produce a dense, homogeneous concrete, securely anchoring the locking extensions into the concrete.

E. Removing Forms:
1. Protect the lining from damage when removing forms. Do not use sharp instruments to pry forms from lined surfaces. When forms are removed, pull any remaining nails without tearing the lining. Clearly mark nail holes, form tie holes, all areas of serious abrasion or damage for repair.
2. Remove banding strips used in securing liner to forms within the limits of the unlined concrete. Fill voids left in the concrete with cement mortar or other approved material.

F. Field joints in the liner shall be one or a combination of the following types:
1. Type J 1:
a. Use this type of joint at concrete expansion joints, and concrete construction joints where the space between adjacent sheets is greater than 1/8 inch, but does not exceed 2-inches.
b. Make joint with a separate 4 inch joint strip and two welding strips. Center the 4 inch strip over the joint, and secure to the liner by a weld along each edge to adjacent liner sheets with a 1 inch weld strip. Space between adjacent sheets shall not exceed 1-inch in width. Lap the 4 inch joint strip over each sheet a minimum of 1-inch.
2. Type J 2:

a. Use this type of joint at concrete construction joints, where the space between adjacent sheets is greater than 1/8-inch, but does not exceed 1/2-inch.
b. Make joint by overlapping sheets by at least 1-inch and securing the overlap to the adjacent liner by means of a welding strip. Upstream sheet shall overlap the downstream sheet. Overlapping sheets shall not extend more than 4-inches beyond the "T" shaped ribs. Secure the lap in place prior to welding using the same means utilized for Type C 1 joint. Apply a welding strip to the back of the joint.

G. Welding:
1. Perform all welding by welders certified by Ameron in strict conformance with the Specifications and instructions of the liner manufacturer. Clean all liner surfaces before welding commences. Provide adequate ventilation in confined spaces during welding operations. Incomplete fusion, charred, or blistered welds will be rejected. Hot air welding guns shall provide clean effluent air at constant pressure to the surfaces to be joined within a temperature range between 500°F and 600°F. Welding shall fuse liner material together to provide a continuous joint equal in corrosion resistance and impermeability to the liner sheets. Supply all equipment required to power the welding guns.

H. Application of Plain Liner Sheets to Metal and Concrete Surfaces:
1. Apply plain liner sheets to metal and concrete surfaces by means of adhesive using the following steps:

a. Sandblast all surfaces. After sandblasting, repair all imperfections in concrete surfaces.

b. In addition to sandblasting, all concrete surfaces shall be acid etched. Thoroughly wash surface etched with acid with clean water supplied by CONTRACTOR and completely dried before applying primer.

c. When concrete surfaces are dry, apply at least one brush coat of an approved primer. When primer is dry, apply at least one coat of approved adhesive to concrete surfaces and the back surface of the liner.

d. Position the liner when the surface of the adhesive is ready, with one edge firmly pressed down. Roll the liner into place, care being taken to avoid the formation of air pockets. All joints shall be tight fitting butt joints. Rub the surface of the liner vigorously to secure the liner material firmly in place. Position corner fittings and welding strips over all joints as required and weld in place. Concrete poured against lining shall be vibrated, spaded or compacted in a careful manner so as to protect the lining and produce a dense, homogenous concrete, securely anchoring the locking extensions into the concrete.

3.2 APPLICATION TO CAST-IN-PLACE CONCRETE STRUCTURES

A. Liner sheets shall be closely fitted and properly secured to the inner forms. Sheets shall be cut to fit curved and warped surfaces using a minimum number of separate pieces.
B. Unless otherwise shown on the plans, the lining shall be returned at least 2 inches (50 mm) at the surfaces of contact between the concrete structure and items not of concrete (including manhole frames, gate guides, clay pipe or brick manholes and clay or cast iron pipes). The same procedure shall be followed at joints where the type of protective lining is changed or the new work is built to join existing unlined concrete. At each return, the returned liner shall be attached to the item in contact with the plastic-lined concrete using manufactures recommendations. If the liner cannot be sealed against the item because of the joint at the return being too wide or rough or because of safety regulations contact ArmorLok for recommendations.
C. A Termination Strip of a minimum 2 keys must be installed at the lower limits of the liner unless the liner can be returned into the concrete a minimum 2 inches.

3.3 JOINTS IN LINING FOR CAST-IN-PLACE CONCRETE STRUCTURES

A. Type J-1: The joint shall be made with a separate 4-inch (100 mm) joint strip and two welding strips. The 4-inch (100 mm) joint strip shall be centered over the joint, heat- sealed to the liner with the goal that all overlapping liner is bonded, an angle grinder with a sanding disk shall be used to lightly profile area where 1” welding strip will be placed to remove sheen and contaminants, then welded along each edge to adjacent sheets with a 1-inch (25 mm) wide welding strip all ends of weld strip shall be melted smooth to avoid snags. The 4-inch (100 mm) joint strip shall lap over each sheet a minimum of 1⁄2 inch (13 mm). It may be used at any transverse or longitudinal joint.

B. Type J-2: The joint shall be made by lapping sheets not less than 1⁄2 inch (13 mm). One 1-inch (25 mm) welding strip is required. The upstream sheet shall overlap the one downstream. The lap shall be heat-sealed with the goal that all overlapping liner is bonded, an angle grinder with a sanding disk shall be used to lightly profile area where 1” welding strip will be placed to remove sheen and contaminants prior to welding on the 1-inch (25 mm) welding strip all ends of weld strip shall be melted smooth to avoid snags.

3.4 TESTING AND REPARING DAMAGED SURFACES

A. At the point of completion of welding where areas can be isolated and or exposure to damage can be mitigated, all surfaces covered with lining, including welds, shall be tested with an approved electrical holiday detector (Tinker & Rasor Model No. AP-W with power pack) with the instrument set between 18,000 and 22,000 volts.

B. All welds shall be probed with a 1-inch to 2-inch wide putty knife with no sharp edges. The knife shall probe the welded joint, pushing gently, but firmly between the PVC sheets.

The knife blade will not penetrate a properly welded joint. A joint that is not properly welded will separate fairly easily by the probing action of the knife and allow penetration of the knife blade into the joint.

C. After the welds have been tested and defective welds repaired, the liner shall be completely cleaned to permit visual inspection and spark testing by CONTRACTOR in the presence of ENGINEER. Spark testing shall be performed with an approved electrical holiday detector furnished by CONTRACTOR with the instrument set at between 18,000 and 22,000 volts minimum. Provide adequate ventilation, lighting, ladders, labor, and scaffolding. Liner areas failing to meet the field test shall be properly repaired and retested.

D. Take all necessary measures to prevent damage to installed lining from equipment and materials used in or taken through the Work. Responsibility for repairing all damage belongs to the CONTRACTOR.

E. Patch all nail and tie holes and all cut, torn, and seriously abraded areas in the liner. Fuse welding strip patches to the liner over the entire patch area. The use of parallel, overlapping, or adjoining welding strips will not be permitted. Large patches may consist of plain liner over the damaged area, with an adhesive bond and all edges covered with welding strips fused to the patch and the sound liner adjoining the damaged area.

F. Whenever liner is not properly anchored to concrete, the repair of liner and restoration of anchorage shall be as directed by the manufacturer and approved by ENGINEER.

3.5 MANUFACTURER’S SERVICES

A. Furnish the services of a qualified factory trained serviceman assist in the installation and to check the installation before it is placed into service, and instruct OWNER'S personnel in care and maintenance.

B. Serviceman shall make a minimum of two visits to the site. Each visit shall be for a period of one 4 hour. One visit shall be to assist the installation and the second visit to check the completed installation, and to instruct the OWNER'S Operation and Maintenance personnel in the recommended corrective and preventive maintenance procedures and repair techniques.

++ END OF SECTION ++

SECTION 15050

PIPING SYSTEMS

PART 1 - GENERAL

1.1 DESCRIPTION

A. Scope:
   1. This Section specifies systems of process piping and general requirements for piping systems. Detailed Specifications for the components listed on the Piping System Specification Sheets are found in the applicable Sections of Division 15, Mechanical. This Section shall be used in conjunction with those Sections.
   2. Provide all labor, materials, equipment and incidentals as shown on the Drawings, specified and required to furnish, install and test all piping, fittings and specials. The Work includes, but is not limited to, the following:
      a. All types and sizes of piping, except those specified under other Sections.
      b. Piping beneath, embedded or within structures.
      c. Supports, restraints and thrust blocks.
      d. Pipe encasements.
      e. Work on or affecting existing piping.
      f. Testing.
      g. Cleaning.
      h. Installation of all jointing and gasket materials, specials and all other Work required to complete the piping installation.
      i. Unless otherwise specifically shown on the Drawings, specified, or included under other Sections, all buried piping Work required begins at the outside face of structures or structure foundations and extending away from structure.

B. Coordination:
   1. Review installation procedures under this and other Sections and coordinate with the Work that is related to this Section.

C. Definitions:
   1. Pressure terms used in this Section and elsewhere in Division 15, Mechanical, are defined as follows:
      a. Maximum: The greatest continuous pressure at which piping system operates.
      b. Test: The hydrostatic or air pressure used to determine system acceptance.

1.2 QUALITY ASSURANCE

A. Conform to all applicable requirements of Parts 600 and 700 of the Uniform Standard specifications for Public Work Construction by the Maricopa Association of Governments (MAG) as supplemented by the City of Chandler. If there is a conflict between MAG Standard specifications and these Specifications, the Provisions of these Specifications shall govern.

B. Requirements of Regulatory Agencies:
   1. Comply with requirements of UL, FM and other jurisdictional authorities, where applicable.
   2. Refer to the General Conditions regarding permit requirements for this Work.
   3. Comply with requirements of the City of Chandler Building Construction Code.

C. Reference Standards: Comply with applicable provisions and recommendations of the following, except as otherwise shown on the Drawings or specified.
   1. ANSI A13.1, Scheme for the Identification of Piping Systems.
   2. ANSI B1.20.1, Pipe Threads, General Purpose (Inch).
   3. ANSI B16.1, Cast Iron Pipe Flanges and Flanged Fittings Class 25, 125, 250, and 800.
   4. ANSI B16.3, Malleable Iron Threaded Fittings Class 150 and 300.
   5. ANSI B16.5, Pipe Flanges and Flanged Fittings.
   6. ANSI B16.9, Factory-Made Wrought Steel Buttwelding Fittings.
   7. ANSI B16.11, Forged Steel Fittings, Socket Welding and Threaded.
   8. ANSI B31.1, Power Piping.
   9. ANSI B31.3, Chemical Plant and Petroleum Refinery Piping.
   10. ASTM A 47/A 47M, Specification for Ferritic Malleable Iron Castings.
   11. ASTM A 53/A 53M, Specification for Pipe, Steel, Black and Hot Dipped, Zinc-Coated Welded and Seamless.
   12. ASTM A 74, Specification for Cast Iron Soil Pipe and Fittings.
   13. ASTM A 105/A 105M, Specification for Carbon Steel Forgings for Piping Components.
   14. ASTM A 106/A 106M, Specification for Seamless Carbon Steel Pipe for High-Temperature Service.
   15. ASTM A 126, Specification for Gray Iron Castings for Valves, Flanges, and Pipe Fittings.
   16. ASTM A 234/A 234M, Specification for Pipe Fittings of Wrought Carbon Steel and Alloy Steel for Moderate and Elevated Temperatures.
   17. ASTM A 312/A 312M, Specification for Seamless and Welded Austenitic Stainless Steel Pipe.
   18. ASTM A 403/A 403M, Specification for Wrought Austenitic Stainless Steel Piping Fittings.
   19. ASTM A 536, Specification for Ductile Iron Castings.

20. ASTM A 570/A 570M, Specification for Steel, Sheet and Strip, Carbon, Hot-Rolled, Structural Quality.
21. ASTM B 88, Specification for Seamless Copper Water Tube.
22. ASTM C 76, Specification for Reinforced Concrete Culvert, Storm Drain, and Sewer Pipe.
23. ASTM C 296, Specification for Asbestos-Cement Pressure Pipe.
24. ASTM C 443-REV A, Specification for Joints for Circular Concrete Sewer and Culvert Pipe, Using Rubber Gaskets.
25. ASTM C 564, Specification for Rubber Gaskets for Cast Iron Soil Pipe and Fittings.
26. ASTM D 1248, Specification for Polyethylene Plastics Molding and Extrusion Materials.
27. ASTM D 1784, Specification for Rigid Poly (Vinyl Chloride) (PVC) Compounds and Chlorinated Poly(Vinyl Chloride) (CPVC) Compounds.
28. ASTM D 2241, Specification for Poly (Vinyl Chloride) (PVC) Plastic Pipe (SDR-PR).
29. ASTM D 2513, Specification for Thermoplastic Gas Pressure Pipe, Tubing, and Fittings.
30. ASTM D 2665, Specification for Poly (Vinyl Chloride) (PVC) Plastic Drain, Waste, and Vent Pipe and Fittings.
31. ASTM D 2996, Specification for Filament-Wound Reinforced Thermosetting Resin Pipe.
32. ASTM D 3034, Specification for Type PSM Poly (Vinyl Chloride) (PVC) Sewer Pipe and Fittings.
33. ASTM D 3261, Specification for Butt Fusion Polyethylene (PE) Plastic Fittings for Polyethylene (PE) Plastic Pipe and Tubing.
34. ASTM D 3262, Specification for "Fiberglass" (Glass-Fiber-Reinforced Thermosetting-Resin) Sewer Pipe.
35. ASTM D 4174, Practice for Cleaning, Flushing, and Purification of Petroleum Fluid Hydraulic Systems.
36. ASTM D 4101, Specification for Propylene Plastic Injection and Extrusion Materials.
37. ASTM F 441, Specification for Chlorinated Poly (Vinyl Chloride) (CPVC) Plastic Pipe, Schedules 40 and 80.
38. AWWA C105, Polyethylene Encasement for Ductile-Iron Piping for Water and Other Liquids.
39. AWWA C110, Ductile-Iron and Gray-Iron Fittings, 3 Inch Through 48 Inch, for Water and Other Liquids.
40. AWWA C111, Rubber-Gasket Joints for Ductile-Iron and Gray-Iron Pressure Pipe and Fittings.
41. AWWA C115, Flanged Ductile-Iron and Gray-Iron Pipe with Threaded Flanges.
42. AWWA C151, Ductile-Iron Pipe, Centrifugally Cast in Metal Molds or Sand-Lined Molds, for Water or Other Liquids.

43. AWWA C205, Cement-Mortar Protective Lining and Coating for Steel Water Pipe--4 In. and Larger--Shop Applied.
44. AWWA C206, Field Welding of Steel Water Pipe.
45. AWWA C207, Steel Pipe Flanges for Waterworks Services--Sizes 4 In. through 144 In.
46. AWWA C208, Dimensions for Fabricated Steel Water Pipe Fittings.
47. AWWA C209, Cold-Applied Tape Coating for special sections, Connections, and Fittings for Steel Water Pipelines.
48. AWWA C210, Liquid Epoxy Coating Systems for the Interior and Exterior of Steel Water Pipe.
49. AWWA C214, Tape Coating Systems for the Exterior of Steel Water Pipelines.
50. AWWA C301, Pre-stressed Concrete Pressure Pipe, Steel Cylinder Type, for Water and Other Liquids.
51. AWWA C303, Reinforced Concrete Pressure Pipe-Steel Cylinder Type, Pre-tensioned, for Water and Other Liquids.
52. AWWA C600, Installation of Ductile-Iron Water Mains and Their Appurtenances.
53. AWWA C651, Disinfecting Water Mains.
54. AWWA C900, Polyvinyl Chloride (PVC) Pressure Pipe, 4 Inches through 12 Inches, for Water.
55. AWWA M11, Steel Pipe-A Guide for Design and Installation.
56. CISPI 301, specification Data for Hubless Cast Iron Sanitary System with No-Hub Pipe and Fittings.
57. FEDSPEC L-C-530 B(1), Coating, Pipe, Thermoplastic Resin or Thermosetting Epoxy.
58. MIL-H-13528B, Hydrochloric Acid, Inhibited, Rust Removing.
59. MIL-STD-810C, Environmental Test Methods.
60. SAE J1227, Assessing Cleanliness of Hydraulic Fluid Power Components and Systems.
61. International Plumbing Code as Supplimented by the City of Chandler
62. Chandler Construction Code.
63. National Sanitation Foundation (NSF-61) and Arizona Administration Code requirements as stated in Specification Section 01420 – References.

D. Fitting and Coupling Compatibility:
   1. To assure uniformity and compatibility of piping components, fittings and couplings for grooved end piping systems shall be furnished by the same manufacturers.

1.3 SUBMITTALS

A. Shop Drawings: Submit for approval the following:
   1. Comply with the requirements of Section 01332, Shop Drawing Procedures.

2. CONTRACTOR shall submit an electronic copy per Specification Section 01332, Shop Drawing Procedures.
3. A copy of this specification section, with addendum updates included, and all referenced and applicable sections, with addendum updates included, with each paragraph check-marked to indicate specification compliance or marked to indicate requested deviations from specification requirements. Check marks (✓) shall denote full compliance with a paragraph as a whole. If deviations from the specifications are indicated, and therefore requested by the CONTRACTOR, each deviation shall be underlined and denoted by a number in the margin to the right of the identified paragraph, referenced to a detailed written explanation of the reasons for requesting the deviation. The ENGINEER shall be the final authority for determining acceptability of requested deviations. The CONTRACTOR shall furnish equipment and/or services as specified if an exception and/or deviation is rejected. The remaining portions of the paragraph not underlined will signify compliance on the part of the CONTRACTOR with the specifications. Failure to include a copy of the marked-up specification sections, along with justification(s) for any requested deviations to the specification requirements, with the submittal shall be sufficient cause for rejection of the entire submittal with no further consideration.

1.4 PRODUCT DELIVERY, STORAGE AND HANDLING

A. General:
1. Deliver materials to the site to ensure uninterrupted progress of the Work.
2. Handle all pipe, fittings, specials and accessories carefully with approved handling devices. Do not drop or roll material off trucks. Do not otherwise drop, roll or skid piping.
3. Store pipes and fittings on heavy wood blocking or platforms so they are not in contact with the ground.
4. Unload pipe, fittings and specials opposite to or as close to the place where they are to be installed as is practical to avoid unnecessary handling. Keep pipe interiors completely free from dirt and foreign matter.
5. Inspect delivered pipe for cracked, gouged, chipped, dented or other damaged material and immediately remove defective pipe from site.

PART 2 - PRODUCTS

2.1 PIPING MATERIALS

A. Unless otherwise specified, piping materials, including pipe, gaskets, fittings, connection and joint assemblies, linings and coatings, shall be selected from those listed on the Piping System Specification Sheets. Piping materials shall conform

to detailed Specifications for each type of pipe and piping appurtenances specified in the applicable Sections of Division 15, Mechanical.

2.2 PIPING IDENTIFICATION

A. Marking Piping:
   1. Clearly mark each piece of pipe or fitting with a designation conforming to that shown on the approved Shop Drawings.
   2. Cast or paint material, type and pressure designation on each piece of pipe or fitting 4-inches in diameter and larger.
   3. Pipe and fittings smaller than 4-inches in diameter shall be clearly marked by manufacturer as to material, type and rating.
   4. Locator wire shall be installed per the City of Chandler Specifications and Standard Details 2025 addition (Supplement to MAG) detail C-402.

PART 3 - EXECUTION

3.1 INSTALLATION - GENERAL

A. Location:
   1. Piping shall be provided as specified, except for adjustments to avoid architectural and structural features and shall be coordinated with electrical construction.

B. Manufacturer's Installation Specialist:
   1. Provide the services of a competent installation specialist of the pipe manufacturer when pipe laying begins, if CONTRACTOR is not experienced in laying and jointing a particular type of pipe.
   2. Retain installation specialist at the site for a minimum of two days or until competency of the pipe laying crew has been satisfactorily demonstrated.

C. Bedding and Backfill:
   1. Bedding and backfill for buried piping shall conform to the requirements of Section 15051, Buried Piping Installation.

3.2 WORK AFFECTING EXISTING PIPING

A. Location of Existing Piping:
   1. Locations of existing piping shown on the Drawings should be considered approximate.
   2. Determine the true locations of existing piping to which connections are to be made, and locations of other facilities which could be disturbed during earthwork operations, or which may be affected by CONTRACTOR'S Work already installed.

3. Conform to applicable requirements of Division 1, General Requirements, pertaining to cutting and patching and connections to existing facilities.

B. Taking Existing Pipelines Out of Service:
1. Do not take pipelines out of service, unless specifically listed below, or approved by ENGINEER.
2. Notify ENGINEER at least 72 hours prior to taking pipeline out of service.

C. Work on Existing Pipelines:
1. Cut or tap pipes as shown on the Drawings or required, with machines specifically designed for this Work.
2. Install temporary plugs to prevent entry of mud, dirt, water and debris.
3. Provide all necessary adapters, fittings, pipe and appurtenances required to complete the Work.
4. Existing pipelines which are cut and abandoned shall be adequately capped or filled with grout.

3.3 TESTING

A. General:
1. Upon completion of piping, but prior to application of insulation on exposed piping, test the piping systems. Pressures, media and test durations shall be as specified in Article 3.3, below. Equipment which may be damaged by the specified test conditions shall be isolated. Testing shall be performed using calibrated test gages and calibrated volumetric measuring equipment to determine leakage rates. Each test gage shall be selected so that the specified test pressure falls within the upper half of the gage's range. Unless otherwise specified, notify the ENGINEER 24 hours prior to each test.
2. Unless otherwise specified, testing, as specified herein, shall include existing piping systems which connect with new piping systems. Existing pipe shall be tested to the nearest existing manhole. Any piping which fails the test shall be repaired. Repair of existing piping will be considered and paid for as extra work.

B. Liquid Systems:
1. Leakage shall be zero at the specified test pressure throughout the specified duration for the following systems: Exposed piping, buried piping, and buried or exposed piping carrying liquid chemicals. Unless otherwise specified, leakage from other buried liquid piping systems shall be less than 0.02 gallon per hour per inch diameter per 100 feet of buried piping.
2. For HOBAS pipe testing, refer to Section 15108.1 – Centrifugally Cast Fiberglass Reinforced Polymer Mortar Pipe.

3.4 CLEANING AND FLUSHING

A. General:
   1. Piping systems shall be cleaned following completion of testing and prior to connection to operating, control, and regulating or instrumentation equipment. At CONTRACTOR'S option, may clean and test sections of the buried or exposed piping systems. Use of this procedure; however, will not waive the requirement for a full pressure test of the completed system. Unless specified otherwise, piping 24-inches in diameter and smaller shall first be cleaned by pulling a tightly fitting cleaning ball or swab through the system. Piping larger than 24-inches in diameter may be cleaned manually or with a cleaning ball or swab.

B. Liquid Systems:
   1. After completion of cleaning, liquid systems, unless otherwise specified, shall be flushed with clean water. With temporary screens in place, the liquid shall be circulated through the piping system using connected equipment for a minimum period of 15 minutes and until no debris is collected on the screens.

3.5 PIPING SPECIFICATION SHEET

A. General:
   1. Piping schedule is shown in Table D. Table D indicates the working pressure, fluid category, pipe material, interior lining, exterior coating, joint type, and additional information. The following abbreviations in Table A, B, and C are used in the Table D.

Table A - Material Abbreviations

Polyvinyl Chloride	PVC	Copper	COP
Ductile Iron	DIP	Steel	STL
Vitrified Clay	VCP	Reinforced Concrete	RCP
Acrylonitrile Butadiene Styrene	ABS	Galvanized Steel	GST
Chlorinated Polyvinyl Chloride	CPVC	Fiberglass Reinforced Plastic Resin	FRP
Stainless Steel	SST	Prestressed Concrete Cylinder	PCCP
High-Density Polyethylene	HDPE	Rubber Gasketed Reinforced Concrete	RGRCP
Galvanized Steel	GST	Corrugated Metal Pipe	CMP

Table B - Lining/Coating Abbreviations

Cement Mortar	CM	Polyethylene Wrap	PE
Bituminous Coating	BC	Glass Lined	GL
Galvanized	GALV	Paint per Section 09900	P
Petroleum Tape	PT	Polyurethane	PY
Polyvinyl Chloride	PVC	Epoxy	EP

Table C - Joint Abbreviations

Bell and Spigot	BS	Welded	W
Flanged	FLG	Mechanical Joint	MJ
Push On	PO	Grooved End Fitting	GEF
Solvent Welded	SW	Butt Wrapped	BW
Threaded	THD	Butt Fusion	BF
Soldered	SL	Brazed	BZ

Table D – Piping Schedule

BURIED PIPE

SERVICE DESCRIPTION	PIPE SYMBOL	PIPE MATERIAL	SPECIFICATION	WORKING PRESSURE	CLASS/ TYPE	INTERIOR LINING	EXTERIOR COATING	JOINT TYPE	TEST PRESSURE
SANITARY SEWER 66-INCHES (Open Cut)	SS	HOBAS	15108.1	Gravity	SN46	NA	NA	FWC Coupling	4 psi *
SANITARY SEWER 66-INCHES (Casing Carrier)	SS	HOBAS	15108.1	Gravity	SN71	NA	NA	Flush Bell Spigot	4 psi *
SANITARY SEWER 48-INCHES	SS	PVC	15106	Gravity	SDR26	NA	NA	Bell and Spigot	4 psi*

*See Specification 15051 Buried Piping Installation for specific Test Pressure requirements.

+ + END OF SECTION + +

SECTION 15051

BURIED PIPING INSTALLATION

PART 1 - GENERAL

1.1 DESCRIPTION

A. Scope:
   1. Provide all labor, materials, equipment and incidentals as shown on the Drawings, specified and required to perform all excavating, backfilling, filling, grading and disposing of earth materials and to furnish, install and test all buried piping, fittings, and specials. The Work includes, but is not limited to, the following:
      a. Excavation and backfill.
      b. All temporary means required to prevent discharge of sediment to water courses from dewatering systems or erosion.
      c. All types and sizes of buried piping, except those specified under other Sections.
      d. Piping beneath structures.
      e. Pipe encasements.
      f. Work on or affecting existing piping.
      g. Testing.
      h. Cleaning.
      i. Installation of all jointing and gasketing materials, specials, flexible couplings, mechanical couplings, harnessed and flanged adapters, sleeves, tie rods, and all other Work required to complete the buried piping installation.
      j. Unless otherwise specifically shown on the Drawings, specified, or included under other Sections, all buried piping Work required, beginning at the outside face of structures or structure foundations and extending away from structure.
   2. No classification of excavated materials will be made. Excavation includes all materials regardless of type, character, composition, moisture, or condition thereof.

B. Coordination:
   1. Review installation procedures under this and other Sections and coordinate the installation of items that must be installed with, or before, the buried piping installation Work.
   2. Section 15051, Buried Piping Installation, specifies the installation of all buried piping materials specified in Sections of Division 15, Mechanical. Coordinate with all applicable Sections.

1.2 QUALITY ASSURANCE

A. Conform to all requirements of Section 601 of the Uniform Standard Specifications for Public Work Construction by the Maricopa Association of Governments (MAG), as supplemented by the City of Chandler. If there is a conflict between MAG Standard Specifications and these Specifications, the Provisions of these Specifications shall govern.

B. Testing Services:
   1. General: Testing of materials, testing for moisture content during placement and compaction of fill materials, and of compaction requirements for compliance with technical requirements of the Specifications shall be performed by a testing laboratory as designated in Section 01451, Testing Laboratory Services Furnished by OWNER and 01452, Testing Laboratory Services Furnished by CONTRACTOR.
   2. ENGINEER'S Testing Agency Scope:
      a. Test CONTRACTOR'S proposed materials in the laboratory and/or field for compliance with these Specifications.
      b. Perform field moisture content and density tests to assure that the specified compaction of backfill materials has been obtained.
      c. Report all test results to the OWNER and CONTRACTOR.
   3. Authority and Duties of CONTRACTOR’S Testing Agency: Technicians representing the testing laboratory shall inspect the materials in the field and perform tests and shall report their findings to the ENGINEER and CONTRACTOR. When the materials furnished or Work performed fails to fulfill Specification requirements, the technician will direct the attention of the ENGINEER and CONTRACTOR to such failure.
      a. The technician shall not act as foreman or perform other duties for CONTRACTOR. Work will be checked as it progresses, but failure to detect any defective Work or materials shall not in any way prevent later rejection when such defect is discovered, nor shall it obligate the ENGINEER for final acceptance. Technicians are not authorized to revoke, alter, relax, enlarge, or release any requirements of the Contract Documents, nor to approve or accept any portion of the Work.
   4. Responsibilities and Duties of CONTRACTOR:
      a. The use of testing services shall in no way relieve CONTRACTOR of the responsibility to furnish materials and construction in full compliance with the Contract Documents.
      b. To facilitate testing services:
         1) Secure and deliver to the testing agency, without cost, preliminary representative samples of the materials he proposes to use and which are required to be tested.
         2) Furnish such casual labor as is necessary to obtain and handle samples at the Work site or at other sources of material.

3) Advise the ENGINEER'S testing agency sufficiently in advance of operations to allow for completion of quality tests and for the assignment of personnel.

c. CONTRACTOR'S Testing Service shall inspect and approve subgrades and fill layers before further construction Work is performed thereon.

d. Responsibility belongs to CONTRACTOR to accomplish the specified compaction for backfill and to control the operations by confirmation tests to verify and confirm compliance, and is complying at all times, with the requirements of these Specifications concerning compaction, control, and testing.

e. The frequency of CONTRACTOR'S confirmation tests shall be not less than as follows; each test location for trenches shall include tests for each layer, type, or class of backfill from bedding to finish grade.

1) Trenches for buried pipe:

a) In Open Fields: Four locations every 200 linear feet, each lift.

b) Along Dirt or Gravel Roads or Off Traveled Right-of-way: Four locations every 200 linear feet, each lift.

c) Crossing Paved Roads: Two locations along each crossing.

d) Under Pavement Cuts or Within Two Feet of Pavement Edges: Two locations every 200 linear feet, each lift.

e) Compaction test shall be taken at least every 1 foot of total lift and 50 feet lineally.

f. Copies of the test reports shall be submitted promptly to the ENGINEER. CONTRACTOR'S tests shall be performed by a soils testing laboratory acceptable to the ENGINEER.

g. Demonstrate the adequacy of compaction equipment and procedures before exceeding any of the following amounts of earthwork quantities:

1) 100 linear feet of trench backfill.

h. Until the specified degree of compaction on the previously specified amounts of earthwork is achieved, no additional earthwork of the same kind shall be performed.

i. Periodic compliance tests will be made by the ENGINEER to verify that compaction is conforming to the requirements previously specified, at no cost to CONTRACTOR. Remove the overburden above the level at which the ENGINEER wishes to test and shall backfill and recompact the excavation after the test is complete.

j. If compaction fails to conform to the specified requirements, remove and replace the backfill at proper density or shall bring the density up to specified level by other means acceptable to the ENGINEER. Subsequent tests required to confirm and verify that the reconstructed backfill has been brought up to specified density shall be paid by CONTRACTOR. CONTRACTOR'S confirmation tests shall be performed in a manner acceptable to the ENGINEER. Frequency of confirmation tests for

remedial Work shall be double that amount specified for initial confirmation tests.

C. Requirements of Regulatory Agencies:
1. Comply with requirements of NFPA Standard No. 24 for "Outside Protection" where applicable to water pipe systems used for fire protection.
2. Comply with requirements of UL, FM and other jurisdictional authorities, where applicable.
3. Refer to the General and Supplementary Conditions regarding permit requirements for this Project.
4. Comply with requirements of the Chandler Building Code and ADOT.
5. Obtain all necessary permits for Work in roads, rights-of-way, ADOT, etc. Also, obtain permits as required by local, state and federal agencies for discharging water from excavations.
6. Perform excavation Work in compliance with applicable requirements of governing authorities having jurisdiction.

D. Reference Standards: Comply with applicable provisions and recommendations of the following, except as otherwise shown on the Drawings or specified.
1. Excavation and Backfill:
a. ASTM D 422, Standard Test Method for Particle-Size Analysis of Soils.
b. ASTM D 427, Test Method for Shrinkage Factors of Soils by the Mercury Method.
c. ASTM D 698, Standard Test Method for Laboratory Compaction Characteristics of Soil.
d. ASTM D 1556, Standard Test Method for Density and Unit Weight of Soil in Place by the Sand-Cone Method.
e. ASTM D 2166, Standard Test Method for Unconfined Compression Strength of Cohesive Soil.
f. ASTM D 2922, Standard Test Methods for Density of Soil and Soil-Aggregate in Place by Nuclear Methods (Shallow Depth).
g. ASTM D 3017, Standard Test Method for Water Content of Soil and Rock in Place by Nuclear Methods (Shallow Depth).
h. ASTM D 4318, Method of Test for Liquid Limit of Soils.
i. AISC Specifications for the Design, Fabrication, and Erection of Structural Steel for Buildings.
j. OSHA Standard, Title 29, Code of Federal Regulations, Part 1926, Section .650 (Subpart P - Excavations).
k. AASHTO T-99, The Moisture-Density Relations of Soils Using a (2.5 kg) 5.5 lb Rammer and a (305 mm) 12 in. Drop {Proctor}.
l. ASSHTO-T-191, Density of Soil in Place by the Sand Cone Method.
m. Uniform Standard Specifications for Public Work Construction by the Maricopa Association of Governments (MAG), as supplemented by the City of Chandler, Section 601.

2. Piping Materials and Installation:
   a. ASTM D 2321, Practice for Underground Installation of Flexible Thermoplastic Pipe.
   b. ASTM D 2774, Practice for Underground Installation of Thermoplastic Pressure Piping.
   c. AWWA C105, Polyethylene Encasement for Ductile-Iron Piping for Water and Other Liquids.
   d. AWWA C111, Rubber-Gasket Joints for Ductile-Iron Pressure Pipe and Fittings.
   e. AWWA C206, Field Welding of Steel Water Pipe.
   f. AWWA C600, Installation of Ductile-Iron Water Mains and Their Appurtenances.
   g. AWWA C606, Grooved and Shouldered Joints.
   h. AWWA C651, Disinfecting Water Mains.
   i. AWWA M9, Concrete Pressure Pipe.
   j. AWWA M11, Steel Pipe - A Guide for Design and Installation.
   k. AWWA M23, PVC - Design and Installation.
   l. ASCE MOP No. 37, Design and Construction of Sanitary and Storm Sewers.
   m. Concrete Pipe Handbook, American Concrete Pipe Association.
   n. NFPA 24, Private Fire Service Mains and Their Appurtenances.
   o. NFPA 54, National Fuel Gas Code.
   p. NSF/ANSI 61, Drinking Water System Components Health Effects.
   q. Arizona Administrative Code R18-4-213, Standards for Additives, Materials, and Equipment.

1.3 SUBMITTALS

A. Shop Drawings: Submit for approval the following:
   1. Excavation and Backfill Submittals:
      a. Excavation Plan: Prior to start of excavation operations, a written plan shall be submitted to demonstrate compliance with OSHA Standard 29 CFR Part 1926.650. As a minimum, excavation plan shall include:
         1) Name of competent person.
         2) Excavation method(s) or protective system(s) to be used.
         3) Copies of "manufacturer's data" or other tabulated data if protective system(s) are designed on the basis of such data.
      b. Excavation and backfill requirements detailing sheeting and bracing, or other protective system(s), dewatering systems, cofferdams, and under-pinning.
      c. Proposed Backfill Material and Flowable Backfill:
         1) Submit material testing results of materials proposed for backfill.
         2) Submit lean concrete flowable backfill mix design for approval, demonstrating compliance with these Specifications.

d. Shop Drawings shall be prepared by a Registered Professional Engineer, licensed in the State of Arizona, recognized as an expert in the specialty involved. Drawings shall be submitted to ENGINEER for record purposes only. Calculations shall not be submitted. Drawing submittals will not be checked and will not imply approval by ENGINEER of the Work involved. Responsibility belongs to CONTRACTOR for designing, installing, operating and maintaining whatever system is necessary to satisfactorily accomplish all necessary sheeting, bracing, protection, underpinning and dewatering.

e. Samples of all materials, including flowable backfill, select backfill, general backfill, granular embedment, crushed stone and sand shall be submitted to the CONTRACTOR'S Testing Agency. Samples of the proposed material shall be submitted at least 14 days in advance of its anticipated use. Samples shall consist of 0.5 cubic feet of each type of material.

2. Piping Materials and Installation Submittals:
   a. Laying schedules for all piping
   b. Full details of piping, specials, manholes, joints, harnessing and thrust blocks, and connections to existing piping, structures, equipment and appurtenances.
   c. Certificates of compliance with referenced Standards for proposed pipe material.
   d. Descriptions of proposed pipe testing methods, procedures and apparatus. Prepare and submit a report for each test conducted.
3. Field Test Reports:
   Testing laboratory shall submit copies of test reports for Field Density of Backfill directly to ENGINEER, with copy to CONTRACTOR.
4. Record Drawings:
   a. During progress of the Work, keep an up-to-date set of Record Drawings showing field and Shop Drawing modifications.
   b. Submit Record Drawings prior to the time of Substantial Completion.
   c. Field As-Builts redlines shall be submitted to the ENGINEER along with each pay application.
5. Comply with the requirements of Section 01332, Shop Drawing Procedures.
6. CONTRACTOR shall submit an electronic copy per Specification Section 01332, Shop Drawing Procedures.
7. A copy of this specification section, with addendum updates included, and all referenced and applicable sections, with addendum updates included, with each paragraph check-marked to indicate specification compliance or marked to indicate requested deviations from specification requirements. Check marks (✓) shall denote full compliance with a paragraph as a whole. If deviations from the specifications are indicated, and therefore requested by the CONTRACTOR, each deviation shall be underlined and denoted by a number in the margin to the

right of the identified paragraph, referenced to a detailed written explanation of the reasons for requesting the deviation. The ENGINEER shall be the final authority for determining acceptability of requested deviations. The remaining portions of the paragraph not underlined will signify compliance on the part of the CONTRACTOR with the specifications. Failure to include a copy of the marked-up specification sections, along with justification(s) for any requested deviations to the specification requirements, with the submittal shall be sufficient cause for rejection of the entire submittal with no further consideration.

1.4 JOB CONDITIONS

A. Existing Structures: The Drawings show certain surface and underground structures adjacent to the Work. This information has been obtained from existing records. It is not guaranteed to be correct or complete and is shown on the Drawings for the convenience of CONTRACTOR. Explore ahead of the required excavation to determine the exact location of all existing structures. Structures shall be supported and protected from damage by CONTRACTOR. If they are broken or damaged, restore them immediately at no additional cost to the OWNER.

B. Existing Utilities: Locate existing underground utilities in the areas of the Work. CONTRACTOR shall pothole for existing utilities that are shown per the Contract Drawings that are in the vicinity of the trench excavation limits or for utilities that cross the proposed water line alignment. CONTRACTOR shall provide to the ENGINEER pothole results prior to excavation activities that identifies the type of utility, invert elevation, top of utility, northing and easting. CONTRACTOR shall pothole all utilities that may not be shown per the Contract Drawings that are identified by Bluestake. Potholing activities shall be performed prior to excavation to determine final water line alignment or any modifications that may be required. If utilities are to remain in place, provide adequate means of protection during all operations.
   1. Should uncharted or incorrectly charted piping or other utilities be encountered during excavation, consult piping or utility owner and ENGINEER immediately for directions as to procedure. Cooperate with OWNER and utility owner in keeping services and facilities in operation. Repair damaged utilities to satisfaction of utility owner.
   2. In general, service lines to individual houses and businesses are not shown on the Drawings, however, assume that a service exists for each utility to each house or business.
   3. Do not interrupt existing utilities serving facilities occupied and used by OWNER or others, except when permitted in writing by ENGINEER and then only after acceptable temporary utility services have been provided.

4. Demolish and completely remove from site existing underground utilities indicated to be removed. Coordinate with utility companies for shut-off of services if lines are active.

C. Protection of Persons and Property: Barricade open excavations occurring as part of the Work and post with warning lights. Operate warning lights during hours from dusk to dawn each day and as otherwise required.
   1. Protect structures, utilities, sidewalks, pavements, and other facilities from damage caused by settlement, lateral movement, undermining, washout and other hazards created by earthwork operations.

D. Dust Control: Conduct all operations meeting the requirements specified in Section 01414, Earthmoving and Dust Control.

E. Roadways and Walks: Unless otherwise approved by ENGINEER, excavated material and materials of construction shall be so deposited, and the Work shall be so conducted, as to leave open and free for pedestrian traffic all crosswalks, and for vehicular traffic a roadway not less than ten feet in width. All hydrants, valves, fire alarm boxes, letter boxes, and other facilities which may require access during construction shall be kept accessible for use. During the progress of the Work, maintain such crosswalks, sidewalks, and roadways in satisfactory condition and the Work shall at all times be so conducted as to cause a minimum of inconvenience to public travel, and to permit safe and convenient access to private and public property along the line of the Work.

1.5 PRODUCT DELIVERY, STORAGE AND HANDLING

A. Deliver materials to the site to ensure uninterrupted progress of the Work.

B. Handle all pipe, fittings, specials and accessories carefully with approved handling devices. Do not drop or roll material off trucks. Do not otherwise drop, roll or skid piping.

C. Store pipes and fittings on heavy wood blocking or platforms so they are not in contact with the ground.

D. Unload pipe, fittings and specials opposite to or as close to the place where they are to be installed as is practical to avoid unnecessary handling. Keep pipe interiors completely free from dirt and foreign matter.

E. Inspect delivered pipe for cracked, gouged, chipped, dented or otherwise damaged material and immediately remove from site.

PART 2 - PRODUCTS

2.1 EMBEDMENT AND BACKFILL MATERIALS

A. Pipe Bedding/Flowable Backfill:
   1. Provide a flowable backfill in lieu of aggregate base course (ABC) as shown per City of Chandler Standard Detail C-402, pipe bedding that shall be 6-inches minimum clearance below outer diameter of pipe to 12-inches minimum above outer diameter of pipe crown. Flowable backfill shall confirm to a ½ Sack Controlled Low Strength Material (CLSM), as specified in Section 728 of the MAG Uniform Standard Specifications.

B. Backfill Materials:
   1. Materials acceptable for use as backfill above pipe bedding shall be stockpiled native sandy clay or granular soils obtained from on-site excavations and which are uniformly mixed, contain no organic matter, nor contain rocks or fragments greater than 4-inches in size, nor have greater than 50-percent passing the 200 sieve. The maximum expansion of on-site materials shall be 1-percent as performed on a sample remolded to approximately 100-percent of the maximum dry density as determined in accordance with ASTM D 698 at two percent below optimum moisture content under a 100-psf surcharge pressure.
   2. All materials for use as backfill and fill material shall be tested by the laboratory and approved by the ENGINEER.

2.2

2.2 PIPING MATERIALS

A. Unless otherwise specified, piping materials, including pipe, gaskets, fittings, connection and joint assemblies, linings and coatings, shall be selected from those listed in Section 15050, Piping Systems. Piping materials shall conform to detailed Specifications for each type of pipe and piping appurtenances specified in the applicable Sections of Division 15, Mechanical.

PART 3 - EXECUTION

3.1 EXCAVATION

A. Provide ENGINEER with sufficient notice and with means to examine the areas and conditions under which excavation is to be performed. ENGINEER will notify CONTRACTOR if conditions are found that may be detrimental to the proper and timely completion of the Work. Do not proceed with the Work until unsatisfactory conditions have been corrected in an acceptable manner.

B. Perform all excavation required to complete the Work as shown on the Drawings, specified and required. Excavations shall include earth, sand, clay, gravel, hardpan, boulders not requiring drilling and blasting for removal, decomposed rock, pavements, rubbish and all other materials within the excavation limits.

C. Excavations for pipelines shall be open excavations. Provide excavation protection system(s) required by ordinances, codes, law and regulations to prevent injury to workmen and to prevent damage to new and existing structures or pipelines. Unless shown on the Drawings or specified otherwise, protection system(s) shall be utilized under the following conditions.
   1. Excavation Less Than Five Feet Deep: Excavations in stable rock or in soil conditions where there is no potential for a cave-in may be made with vertical sides. Under all other conditions, excavations shall be sloped and benched, shielded, or shored and braced.
   2. Excavations More Than Five Feet Deep: Excavations in stable rock where there is no potential for a cave-in may be made with vertical sides. Under all other conditions, excavations shall be sloped and benched, shielded or shored and braced.
   3. Excavation protection system(s) shall be installed and maintained in accordance with drawings submitted under Article 1.3, above.

D. Where the pipeline is to be placed below the ground water table, well points, cofferdams or other acceptable methods shall be used to permit construction of said pipeline under dry conditions. Dry conditions shall prevail until the pipelines are properly jointed, tested and backfilled. Water level shall be maintained below top of backfill at all times.

E. Pumping of water from excavations shall be done in such a manner to prevent the carrying away of unsolidified concrete materials, and to prevent damage to the existing subgrade.

F. Material Storage: Stockpile satisfactory excavated materials in approved areas, until required for backfill or fill. Place, grade and shape stockpiles for proper drainage.
   1. Locate and retain soil materials away from edge of excavations.
   2. Dispose of excess soil material and waste materials as specified hereinafter.
   3. Stockpiled excavated soils for use as subsequent fill shall be classified by laboratory as on-site granular or sandy clay soils. Use and placement of fill shall be performed as specified for each class.
   4. Excess soil from excavations shall be disposed of off-site. Disposal shall be in accordance with state and local regulatory requirements.

G.

G. Trench width shall be minimized to greatest extent practical but shall conform to MAG Standard Specification 601 and be sufficient to provide room for installing, joining, and inspecting piping.
   1. The width of the trench shall not be greater than the maximum indicated per MAG Specification Section 601 at and below the level of the top of the pipe. If the maximum width as specified above is exceeded at the top of the pipe, provide, at no additional cost to the OWNER, the necessary loading bearing capacity by means of bedding, having a higher bedding factor than that specified, higher strength pipe a concrete cradle, cap or encasement, or by other means approved in writing by the ENGINEER.
   2. The width of the trench above that level may be made as wide as necessary for shoring or other wall support measures necessary for a safe and proper installation. Trench walls may be sloped in-lieu of shoring, sheeting or other wall support measures. In all cases, responsibility belongs to CONTRACTOR for all costs incurred as a result of increased trench width.
   3. Enlargements at pipe joints may be made if required and approved by ENGINEER.
   4. Sufficient for shoring and bracing, or shielding and dewatering.

H. Subgrades for trench bottoms shall be firm, dense, and thoroughly compacted and consolidated; shall be free from mud, muck, and other soft or unsuitable materials; and shall remain firm and intact under all construction operations. Where ENGINEER considers the existing subgrades unsuitable, remove same and replace it with Controlled Low Strength Material. Subgrades which are otherwise solid, but which become soft or mucky on top due to construction operations, shall be replaced with Controlled Low Strength Material. The finished elevation of stabilized subgrades shall not be above subgrade elevations required for the piping installation as herein specified

I. Except at locations where excavation of rock from the bottom of the trench is required, care shall be taken not to excavate below the required depth. Unauthorized excavation below the specified grade line shall be refilled at CONTRACTOR'S expense with Controlled Low Strength Material.

J. Whenever rock is encountered in the trench bottom, it shall be over excavated to a minimum depth of 6-inches below the O.D. of the pipe. This over excavation shall be filled with Controlled Low Strength Material.

3.2 EXCAVATION DRAINAGE AND DEWATERING

A. General:
   1. Prevent surface and subsurface water from flowing into excavations and from flooding adjacent areas.
   2. Remove water from excavations as fast as it collects.

3. Maintain the ground water level at approximately three feet below the bottom of the excavation to provide a stable surface for construction operations, a stable subgrade for permanent work and to prevent damage to Work during all stages of construction.
4. Provide and maintain pumps, sumps, suction and discharge lines and other dewatering system components necessary to convey water away from excavations. Adequate operational standby equipment shall be maintained on the site.
5. Provide approved sediment traps when water is conveyed into water courses.
6. Obtain ENGINEER'S approval before shutting down dewatering system for any reason.

B. Standby Requirements for Dewatering:
1. Provide standby equipment to ensure continuity of dewatering operations.

C. Disposal of Water Removed by Dewatering System:
1. Dispose of all water removed from the excavation in such a manner as not to endanger public health, property, or any portion of the Work under construction or completed.
2. Dispose of water in such a manner as to cause no inconvenience to OWNER, ENGINEER or others involved in work about the site.
3. Convey water from the excavation in a closed conduit. Do not use trench excavations as temporary drainage ditches.

3.3 SHEETING, SHORING, AND BRACING FOR STRUCTURE EXCAVATIONS

A. General:
1. Used material shall be in good condition, not damaged or excessively pitted. All steel or wood sheeting designated to remain in place shall be new. New or used sheeting may be used for temporary work.
2. All timber used for breast boards (lagging) shall be new or used, meeting the requirements for Douglas Fir Dense Construction grade with a bending strength not less than 1,500 psi or Southern Pine No. 2 Dense.
3. All steel work for sheeting, shoring, bracing, cofferdams, etc., shall be designed in accordance with the provisions of the "Specifications for the Design, Fabrication and Erection of Structural Steel for Buildings" of the AISC, except that field welding will be permitted.
4. Steel sheet piling shall be manufactured from steel conforming to ASTM A 328. Steel for soldier piles, wales, and braces shall be new or used and shall conform to ASTM A 36/ A 36M.
5. Maintain shoring and bracing in excavations regardless of time period excavations will be open. Carry down shoring and bracing as excavation progresses.

6. Unless otherwise shown on the Drawings, specified, or ordered, all materials used for temporary construction shall be removed when Work is completed. Such removal shall be made in a manner not injurious to the structure or its appearance or to adjacent Work.
7. Provide permanent steel sheet piling or pressure creosoted timber sheet piling wherever subsequent removal of sheet piling might permit lateral movement of soil under adjacent structures. Cut off tops as required, but at least 3 feet below grade, and leave permanently in place.
8. The clearances and types of the temporary structures, insofar as they affect the character of the finished Work and the design of sheeting to be left in place, will be subject to the approval of ENGINEER; but, responsibility for the adequacy of all sheeting, shoring, bracing, coffer-damming, etc., belongs to CONTRACTOR.
9. Safe and satisfactory sheeting, shoring, and bracing shall be the entire responsibility of CONTRACTOR.
10. All Municipal, County, State, and Federal ordinances, codes, regulations, and laws shall be observed.

B. Removal of Sheeting and Bracing:
   1. Remove sheeting and bracing from excavations, unless otherwise directed in writing by ENGINEER. Removal shall be done so as to not cause injury to the Work. Removal shall be equal on both sides of excavation to ensure no unequal loads on pipe or structure.
   2. Defer removal of sheeting and bracing, where removal may cause soil to come into contact with concrete, until the following conditions are satisfied:
      a. Concrete has cured a minimum of seven days.
      b. Wall and floor framing up to and including grade level floors are in place.

3.4 TRENCH SHIELDS

A. Excavation of earth material below the bottom of a shield shall not exceed the limits established by ordinances, codes, laws, and regulations.

B. When Using a Shield for Pipe Installation:
   1. Any portion of the shield that extends below the mid-diameter of an installed rigid pipe (e.g., RCP) shall be raised above this point prior to moving the shield ahead for the installation of the next length of pipe.
   2. The bottom of the shield shall not extend below the mid-diameter of installed flexible pipe (e.g., steel, DI, PVC, etc.) at any time.

C. When using a shield for the installation of structures, the bottom of the shield shall not extend below the top of the bedding for the structures.

D. When a shield is removed, extreme care shall be taken to prevent damage to the structures or the disturbance of the bedding for structures. Structures that are disturbed shall be removed and reinstalled as specified.

3.5 GENERAL REQUIREMENTS FOR PIPE BEDDING, BACKFILL AND COMPACTION

A. Furnish, place, and compact all flowable backfill, backfill, and other materials required for pipelines as required to provide the finish grades as shown on the Drawings and as described herein.

B. Fill containing organic materials or other unacceptable material shall be removed and replaced with approved fill material as specified.

C. Placement Flowable Pipe Bedding and Backfill Material:
   1. Bedding and backfill material as specified per section 2.1 shall be placed to the grades shown per City of Chandler Detail C-402. Bring pipe bedding around piping up evenly on all sides.
   2. Flowable backfill shall be placed in accordance with MAG Standard Specification 604. Mechanical vibration in accordance with ACI requirements shall be used to consolidate all flowable backfill material.
   3. Keep excavations dry during backfilling operations. No backfill or fill material shall be placed when free water is standing on the surface of the area where the fill is to be placed. No compaction of fill will be permitted with free water on any portion of the fill to be compacted. No fill shall be placed or compacted in a frozen condition or on top of frozen material. Any fill containing organic materials or other unacceptable material previously described shall be removed and replaced with approved fill material prior to compaction.
   4. Compaction shall be performed with equipment suitable for the type of backfill material being placed. CONTRACTOR shall select equipment that is capable of providing the minimum density required by these Specifications. Equipment shall be provided that is capable of compacting in restricted areas next to structures and around piping. The effectiveness of the equipment selected by CONTRACTOR shall be tested at the commencement of compacted fill work by construction of a small section of fill within the area where fill is to be placed. If tests on this section of fill show that the specified compaction is not obtained, CONTRACTOR shall increase the amount of coverages, decrease the lift thicknesses, or obtain a different type of compactor.
   5. The compaction requirements specified are predicated on the use of normal materials and compaction equipment. In order to establish criteria for the placement of a controlled fill so that it will have compressibility and strength characteristics compatible with the proposed structural loadings, a series of laboratory compaction and/or compressive strength tests shall be performed on the samples of materials submitted by CONTRACTOR. From the results of the

laboratory tests, the final values of the required percent compaction, the acceptable compaction moisture content range, and the maximum permissible lift thickness will be established for the fill material and construction equipment proposed.

6. If the specified densities are not obtained because of improper control of placement or compaction procedures, or because of inadequate or improperly functioning compaction equipment, CONTRACTOR shall perform whatever Work is required to provide the required densities. This Work shall include complete removal of unacceptable fill areas, and replacement and recompaction until acceptable fill is provided, at no additional cost to the OWNER.
7. CONTRACTOR shall repair, at their own expense, any after-settlement that occurs. CONTRACTOR shall make all repairs and replacements required within 30 days after notice from ENGINEER or OWNER.

D. Compaction Density Requirements: Refer to Article 3.9, below.

3.6 PIPE INSTALLATION

A. General:
1. All bedding shall be inspected by ENGINEER prior to laying pipe. Notify ENGINEER in advance of excavating, bedding and pipe laying operations.
2. The ENGINEER prior to installation shall inspect all piping. ENGINEER'S inspection will not relieve CONTRACTOR or manufacturer from responsibility for damaged products.
3. All piping shall be carefully examined for cracks, damage or other defects before installation. Any piping that is defective, including but not limited to, cracked, damaged, in poor condition, or with damaged linings or improper markings shall be rejected, unless the product can be repaired in a manner acceptable to the manufacturer and ENGINEER. Any piping found to be broken or defective after it has been installed shall be removed, replaced or repaired at CONTRACTOR'S expense.
4. Take field measurements, where required, prior to installation to ensure proper fitting of the Work. Uncover existing pipelines sufficiently in advance of the proposed Work in order that the type and location of the existing pipes and joints and other information required to fabricate the proposed piping can be determined. Responsibility to obtain whatever information is required to complete the connections of the proposed pipelines to the existing pipelines belongs to CONTRACTOR.
5. Present all conflicts between piping systems and equipment, structures or facilities to ENGINEER for determination of corrective measures before proceeding.
6. Request instructions from ENGINEER before proceeding if there is a conflict between the manufacturer's recommendations and the Contract Documents.

7. Installation of all pipe, fittings, valves, specials and appurtenances shall be subject to the review and approval of the ENGINEER.
8. Install piping as shown on the Drawings, specified and as recommended by the manufacturer and in conformance with referenced standards and approved Shop Drawings.
9. No pipe shall be brought into position until the preceding length has been bedded and secured in its final position.
10. Minimum earth cover over the piping shall be as shown on the Drawings, specified or directed by the ENGINEER, but in no case shall the earth cover be less than 3 feet-6 inches for all piping, except drains.
11. Interior of all piping and mating surfaces shall be inspected and all dirt, gravel, sand, debris or other foreign material shall be completely removed from the interior and mating surfaces before installation. Measures shall be taken to maintain the interior of all piping clean until acceptance of the completed Work. Care shall be taken to prevent foreign matter from entering joint space. Bell and spigot mating surfaces shall be wiped clean immediately before piping is laid. For ductile-iron pipe, the bell and spigot mating surfaces shall be thoroughly cleaned with a wire brush.
12. Install piping accurately to line and grade shown on the Drawings, specified or directed, unless otherwise approved by the ENGINEER. Accurate means of determining and checking the alignment and grade shall be used, which shall be subject to the approval of the ENGINEER. Any modifications to the Contract Documents to suit the pipe manufacturer's standard shall be approved by the ENGINEER. Remove and relay piping that is incorrectly installed, at CONTRACTOR'S expense.
13. Do not lay piping in water, unless otherwise specified in these Specifications or approved by the ENGINEER. Ensure that the water level in the trench is at least 6-inches below the bottom of piping. Maintain a dry trench until jointing and backfilling are complete, unless otherwise specified in these Specifications or approved by the ENGINEER.
14. Where unforeseen conditions will not permit the installation of piping as shown on the Drawings or specified, no piping shall be installed without approval of the ENGINEER. Do not modify structures or facilities without approval of the ENGINEER.
15. Start laying piping at lowest point and proceed toward the higher elevations, unless otherwise approved by the ENGINEER. Slope piping uniformly between elevations shown on the Drawings or as otherwise directed by the ENGINEER.
16. Place bell and spigot piping so that the bells face the direction of laying, unless otherwise approved by the ENGINEER.
17. Piping shall be installed so that the barrel of the piping, and not the joints, receives the bearing pressure from the trench bottom or other bedding condition.
18. No piping shall be brought into position until the preceding length, valve, fitting, or special has been bedded and secured in place.

19. Whenever pipe laying is not actively in progress, the open ends of the piping shall be closed by a temporary plug or cap to prevent soil, water and other foreign matter from entering the piping.
20. Field cutting of metallic piping, where required for inserting valves, fitting, specials, and closures, shall be made with a machine specially designed for cutting piping and in accordance with the manufacturer's instructions. Cuts shall be carefully done, without damage to piping, so as to leave a smooth end at right angles to the axis of the piping. Cut end shall be tapered and sharp edges filed off smooth. Flame cutting shall not be permitted. Any piping damaged by CONTRACTOR due to improper or careless methods of cutting shall be replaced or repaired at his expense.
21. Blocking under piping shall not be permitted, unless specifically approved by ENGINEER for special conditions.
22. Protective linings and coatings shall be touched up prior to installation, where required.
23. Except where bends, wyes or similar fittings are used, changes in alignment and grade of the piping shall be made by deflecting joints or with beveled pipe. Permissible joint deflection shall not exceed 75 percent of the amount allowed by the manufacturer.
24. All joints shall be made in the presence of the ENGINEER or his duly authorized representative, except as otherwise approved.
25. Special care shall be taken to ensure that each section of piping abuts against the next in such a manner that there will be not shoulder or unevenness of any kind along the piping invert.
26. Piping shall be rotated as required to place outlets in proper position.
27. Blind flanges and cleanouts shall be provided at locations shown on the Drawings, specified or required. Cleanouts on buried piping shall include all pipe, fittings and appurtenances required to bring cleanout to finished grade and terminate in a flange and blind flange or suitably capped piping as shown on the Drawings. Cleanout piping shall be same as that specified for the main run.
28. All gravity lines shall pitch uniformly at the grade shown on the Drawings or as specified or approved by the ENGINEER.
29. Short pipe stubs, maximum 4-feet-0-inch in length, shall be used at all manholes and other wall faces, except as otherwise specified.
30. Field painting shall be accomplished after joints are made.
31. All piping shall be plugged watertight with a suitable cap or plug securely fastened to the end of the piping at all contact interfaces.
32. On steep slopes, take measures acceptable to ENGINEER to prevent movement of the pipe during installation.
33. Exercise care to avoid flotation when installing pipe in cast-in-place concrete.
34. For copper tubing and thermoplastic piping, snake piping in trench to compensate for thermal expansion.

B. Manufacturer's Installation Specialist:
   1. Provide the services of a competent installation specialist of the pipe manufacturer when pipe laying commences if CONTRACTOR is not experienced in laying and jointing a particular type of pipe for the following:
      a. HOBAS pipe.
      b. Thermoplastic pipe.
   2. Retain installation specialist at the site for a minimum of two days or until competency of the pipe laying crew has been satisfactorily demonstrated.

C. Separation of Sewers and Potable Water Pipe Lines:
   1. Conform to requirements of MAG Specification Section 610.5.

D. Plugs:
   1. Temporarily plug installed pipe at the end of each day's Work or other interruption to the installation of any pipeline. Plugging shall prevent the entry of animals, liquids or persons into the pipe or the entrance or insertion of deleterious materials.
   2. Install standard plugs into all bells at dead ends, tees or crosses. Cap all spigot ends.
   3. Fully secure and block all plugs and caps installed for pressure testing to withstand the specified test pressure.
   4. Where plugging is required for phasing of the Work or for subsequent connection of piping, install watertight, permanent type plugs.

E. Laying Pipe:
   1. Conform to manufacturer's instructions and requirements of the standards listed below, where applicable:
      a. Ductile Iron Pipe: AWWA C600, AWWA C105.
      b. Concrete Pipe: AWWA M9, Concrete Pipe Handbook.
      c. Steel Pipe: AWWA M11, AWWA C206.
      d. Thermoplastic Pipe: ASTM D 2774.
      e. Fiberglass Reinforced Polymer Mortar Pipe: ASTM D3262.
      f. ASCE Manual of Practice No. 37.

F. Jointing Pipe:
   1. CCFRP (HOBAS) Pipe:
      a. Unless otherwise specified, the pipe shall be field connected with fiberglass sleeve couplings that utilize built-in double fin integral elastomeric seal gasket made of EPDM rubber compound, which must be mechanically locked to FRP backing, as the sole means to maintain joint water tightness. The joints must meet the performance requirements of ASTM D4161, and be leak free after field testing.
   2. Thermoplastic Pipe Joints:
      a. Solvent Cement Joints:

1) Bevel pipe ends and remove all burrs before making joints. Clean both pipe and fittings thoroughly. Do not attempt to make solvent cement joints if temperature is below 40°F or above 90°F when exposed to direct sunlight or in wet conditions.
2) Use solvent cement supplied or recommended by the pipe manufacturer.
3) Apply joint primer and solvent cement and assemble joints in strict accordance with the recommendations and instructions of the manufacturer of the joint materials and the pipe manufacturer.
4) Observe safety precautions with the use of joint primers and solvent cements. Allow air to circulate freely through pipelines to permit solvent vapors to escape. Slowly admit water when flushing or filling pipelines to prevent compression of gases within pipes.

b. Push-On Joints:
1) Bevel all field-cut pipes, remove all burrs and provide a reference mark the correct distance from the pipe end.
2) Clean the pipe end and the bell thoroughly before making the joint. Insert the O-ring gasket, making certain it is properly oriented. Lubricate the spigot well with an approved lubricant; do not lubricate the bell or O-ring. Insert the spigot end of the pipe carefully into the bell until the reference mark on the spigot is flush with the bell.

3. Mechanical Coupling Joints:
a. Prior to the installation and assembly of mechanical couplings, the joint ends shall be cleaned thoroughly with a wire brush to remove foreign matter. Following this cleaning, lubricant shall be applied to the rubber gasket or inside of the coupling housing and to the joint ends. After lubrication, the gasket shall be installed around the joint end of the previously installed piece and the joint end of the subsequent piece shall be mated to the installed piece. The gasket shall be positioned and the coupling housing placed around the gasket and over the grooved or shouldered joint ends. The bolts shall be inserted and the nuts screwed up tightly by hand. The bolts shall then be tightened uniformly in order to produce an equal pressure on all parts of the housing. When the housing clamps meet metal to metal, the joint is complete and further tightening is not required.

G. Transitions from One Type of Pipe to Another:
1. Provide all necessary adapters, specials and connection pieces required when connecting different types and sizes of pipe or connecting pipe made by different manufacturers.

H. Closures:
1. Provide all closure pieces shown on the Drawings or required to complete the Work.

3.7 BACKFILL

A. General:
   1. Backfill begins after the placement of the pipe bedding. Pipeline trenches may be backfilled prior to pressure testing, but no structure shall be constructed over any pipeline until it has been tested.
   2. Place and compact backfill as construction progresses.
   3. Compacted backfill shall be required for the full depth of the trench above the flowable pipe embedment material. Where the trench for one pipe passes beneath the trench for another pipe or electrical duct bank, the lower trench shall be compacted to the level of the bottom of the upper trench.
   4. Each layer of backfill material shall be compacted by at least two complete coverages of all portions of the surface of each lift using approved compaction equipment. One coverage is defined as the conditions reached when all portions of the fill lift have been subjected to the direct contact of the compacting surface of the compactor.
   5. The method of compaction and the equipment used shall be appropriate for the material to be compacted and shall not transmit damaging shocks to the pipe.
   6. The degree of compaction required for all types of fills shall be as listed below. Material shall be moistened or aerated as necessary to provide the moisture content that will facilitate obtaining the specified compaction.
   7. The trench backfill shall be thoroughly compacted to no less than the following densities when tested and determined by ASSHTO T-99 and T-191 or ASTM D 2922 and D 3017. When ASSHTO T-99, Method A or B, and T-191 are used for density determination, MAG Detail 190 will be used for rock correction. The minimum density required is identified below:

(The remainder of this page was left blank intentionally)

Material Thickness (inches)	Required Minimum Density-Percent Compaction (ASTM D 698)	Maximum Uncompacted Lift (inches)
Aggregate Base Course	100	8
Trench Backfill above pipe – Deeper than 2 feet below pavement	95	8
Trench Backfill above pipe – Within 2 feet below pavement	100	8
Backfill Material	95	8
Flowable Backfill*	See below *	See below *

* Flowable backfill shall be in accordance with Paragraph 2.1.A., above. Testing shall be in accordance with MAG 728 and testing methods described in Section 03300, Cast–In–Place Concrete.

a. All fill must be wetted and thoroughly mixed to achieve optimum moisture content, within two percent, with the following exceptions: For on-site clayey soils, the optimum moisture content may range from the target value to ±2 percent.
b. Natural undisturbed soils or compacted soil subsequently disturbed or removed by construction operations shall be replaced with materials compacted as specified above.

8. CONTRACTOR'S testing service shall perform tests required to provide data for selection of fill material and control of placement water content.
9. Field density tests, to ensure that the specified density is being obtained, shall be performed by CONTRACTOR'S testing service during each day of compaction Work.
10. If the tests indicate unsatisfactory compaction, provide the additional compaction necessary to obtain the specified degree of compaction. All additional compaction work shall be performed by CONTRACTOR, at no additional cost to the OWNER, until the specified compaction is obtained. This work shall include complete removal of unacceptable (as determined by the ENGINEER) fill areas and replacement and recompaction until acceptable fill is provided.

B. Replacement of Unacceptable Excavated Materials: In cases where over-excavation for the replacement of unacceptable soil materials is required, the excavation shall be backfilled to the required subgrade with select backfill material and thoroughly compacted as specified in Paragraph 3.7., above. Sides of the excavation shall be sloped in accordance with the maximum inclinations specified for each structure location.

C. Perform backfill around structures using the specified procedures, except that within ten feet of foundations and underground structures, light compaction equipment shall be used, with the gross weight of the equipment not exceeding 7,000 lbs. Provide equipment that is capable of the required compaction within restricted areas next to structures and around piping.

3.8 GRADING

A. General: Uniformly grade areas within limits of grading shown on the Drawings or specified, including adjacent transition areas. Smooth subgrade surface within specified tolerances, compact with uniform levels or slopes between points where elevations are shown on the Drawings, or between such points and existing grades.

B. Walks: Shape surface of areas under walks to line, grade and cross-section, with finish surface not more than 1-inch above or below the required subgrade elevation.

C. Pavements: Shape surface of areas under pavements to line, grade and cross-section, with finish surface not more than 1/2-inch above or below the required subgrade elevation.

D. Slabs: Grade smooth and even, free of voids, compacted as specified, and to required elevation. Provide final grades within a tolerance of 1/2-inch when tested with a 10-foot straightedge.

E. Compaction: After grading, compact subgrade surfaces to the depth and percentage of maximum density required.

3.9 PAVEMENT SUBBASE COURSE

A. Grade Control: During construction, maintain lines and grades including crown and cross-slope of subbase course.

B. Shoulders: Place shoulders along edges of subbase course to prevent lateral movement. Construct shoulders of acceptable soil materials, placed in such quantity to compact to thickness of each subbase course layer. Compact and roll at least a 12-inch width of shoulder simultaneously with compacting and rolling of each layer of subbase course.

C. Placing: Place subbase course material on prepared subgrade in layers of uniform thickness, conforming to indicated cross-section and thickness. Maintain optimum moisture content for compacting subbase material during placement operations.
   1. When a compacted subbase course is shown on the Drawings to be 6-inches thick or less, place material in a single layer. When shown on the Drawings to be more than 6-inches thick, place material in equal layers, except no single layer more than 6-inches or less than 3-inches in thickness when compacted.

3.10 DISPOSAL OF EXCAVATED MATERIALS

A. Material removed from the excavations which does not conform to the requirements for fill or is in excess of that required for backfill shall be hauled away by CONTRACTOR and disposed of in compliance with municipal, county, state, federal or other applicable regulations at no additional cost to OWNER.

3.11 RESTORING AND RESURFACING EXISTING ROADWAYS AND FACILITIES

A. Place 1-1/2-inches of temporary bituminous pavement immediately after backfilling trenches in paved roadways. Maintain the surface of the paved area over the trench in good and safe condition during progress of the entire Work, and promptly fill all depressions over and adjacent to the trench caused by settlement of backfill. Immediately prior to constructing the permanent paving and base, remove and dispose of temporary pavement. Permanent replacement pavement shall be equal to that of the existing roadways unless otherwise shown on the Drawings or specified.

B. Pavement, gutters, curbs, walks, driveways and roadways disturbed or damaged by CONTRACTOR'S operations, except areas designated "New Pavement" or "Proposed Pavement", shall be restored or replaced at CONTRACTOR’S expense to as good condition as they were previous to the commencement of the Work and in accordance with applicable local and state highway specifications.

3.12 WORK AFFECTING EXISTING PIPING

A. Location of Existing Piping:
   1. Locations of existing piping shown on the Drawings should be considered approximate.
   2. Determine the true location of existing piping to which connections are to be made, and location of other facilities which could be disturbed during earthwork operations, or which may be affected by CONTRACTOR'S Work already installed.
   3. Conform to applicable requirements of Division 1, General Requirements, pertaining to cutting and patching, and connections to existing facilities.

4. CONTRACTOR shall pothole all utility crossings as shown per the contract drawings for all new utilities, i.e., electrical conduits, piping, instrumentation conduits, irrigation, etc, crossing existing utilities prior to construction. CONTRACTOR shall provide as-builts showing elevations and northing and eastings of all crossings.

B. Taking Existing Pipelines Out of Service:
1. Do not take pipelines out of service unless specifically listed below, or approved by ENGINEER.

C. Work on Existing Pipelines:
1. Cut or tap pipes as shown on the Drawings or required with machines specifically designed for this Work. All taps shall be made at the spring line except for air release taps. Taps to buried piping 16-inches in diameter and larger shall be protected by an access vault to the surface or shall be 4-inches larger, with a shut off ball valve and a riser to the surface. Taps made to pipe smaller than 16-inches may be 2-inch taps. Taps shall not be located under slabs.
2. Install temporary plugs to prevent entry of mud, dirt, water and debris.
3. Provide all necessary adapters, fittings, pipe and appurtenances required to complete the Work. Provide all necessary adapters, fittings, pipe and appurtenances required to complete the Work.
4. Existing pipelines which are cut and abandoned shall be adequately capped or filled with grout.

3.13 TESTING OF PIPING

A. General:
1. Test all piping, except as otherwise authorized by ENGINEER.
2. Notify ENGINEER and local authorities having jurisdiction at least 48 hours in advance of testing if their presence is required.
3. Conduct all tests in the presence of the ENGINEER.
4. Remove or protect any pipeline-mounted devices which may be damaged by the test pressure.
5. Provide all apparatus and services required for testing, including but not limited to, the following:
   a. Test pumps, bypass pumps, hoses, calibrated gauges, meters, test containers, valves and fittings.
   b. Temporary bulkheads, bracing, blocking and thrust restraints.
6. Provide air if an air test is required and power if pumping is required.
7. Unless otherwise specified, OWNER will provide fluid required for testing.
8. Repair and retest pipelines that fail to hold specified test pressure or which exceed the allowable leakage rate.
9. Unless otherwise noted, pipelines shall hold specified test pressure for two hours.

10. Unless otherwise specified, test pressures required are at the lowest elevation of the pipeline section being tested.

B. Schedule of Pipeline Tests:
1. Refer to Section 15050, Piping Systems, for the type of test required and the required hydrostatic test pressure.
2. Unless otherwise specified, the required hydrostatic test pressures are at the lowest elevation of the pipeline.
3. For piping not listed in Section 15050, Piping Systems:
   a. Hydrostatically test pipe that will be operating at a pressure greater than five psig.
   b. Use exfiltration testing or low-pressure air testing for all other piping.
4. Hydrostatic Test Pressure:
   a. Use test pressures listed in Section 15050, Piping Systems.
   b. If a test pressure is not listed in Section 15050, Piping Systems, or if a hydrostatic test is required for piping not listed in Section 15050, Piping Systems, the test pressure will be determined by the ENGINEER based on the maximum anticipated sustained operating pressure and the methods described in the AWWA Manual or Standard which applies to the piping system.
5. CONTRACTOR shall provide a test plan 14 days prior to performing the hydrostatic pressure tests on the pipe lines.

C. Required Tests for Gravity Sewer:
1. Elect to test piping, using either air or water test procedures. Notify ENGINEER, in writing, in advance of all testing, which method he plans to utilize and must follow through with the same method on all pipeline testing.
   a. Gravity sewers shall be tested with either air or water testing; however, storm drains may only be water tested.
   b. Tests shall be performed after backfilling is completed, but shall be performed before final cleanup and acceptance of Work.
   c. Tests shall be performed prior to final acceptance.
      1) Test all piping for leakage by means of the tests described below.
      2) Test to be performed between adjacent manholes or as approved by the ENGINEER.
   d. Prior to making tests, submit details of his testing procedures, with a description of methods and equipment CONTRACTOR proposes to use, to the ENGINEER for approval. Furnish all necessary labor, equipment, water, watertight bulkheads, rodding machine, generator, pumps and all else necessary to carry out the required tests.
2. Air Test:
   a. Wet and thoroughly clean the inside of the pipe before test is performed.
   b. Insert test plugs in ends of pipe to be tested.
   c. Securely brace test plugs.

d. Measure and record groundwater height above the pipe invert. All gage pressures in the test shall be increased by the amount of the back pressure due to groundwater submergence.
e. Slowly fill the pipe with air to a pressure of four psig. Maintain pressure between 4 and 3.5 psig for at least two minutes for temperature stabilization.
f. Check all plugs for tightness.
g. With a pressure of approximately four psig in pipe, disconnect air supply.
h. Allow pressure to decrease to 3.5 psig.
i. When the pressure reaches 3.5 psig, record the time required to decrease to 2.5 psig using a stopwatch.
j. The line is considered acceptable if the time for the pressure to decrease from 3.5 psig to 2.5 psig is not less than the amount shown on the following table for the respective pipe diameters.

Minimum Acceptance Times	
Pipe Diameter (Inches)	**Time, min/100 ft**
48	8.5 min.
66	12.1 min.

k. If the leakage in the section tested exceeds the specified amount, make the necessary repairs or replacements required to reduce the leakage to within the specified limits and the test shall be repeated until the leakage requirement is met.
l. No one shall be allowed in the manhole during air testing.

3. Water Test:
   a. When water test is performed the sewer pipe test section shall be filled with water and allowed to stand for 24 hours. The water shall then be replenished and the test performed.
   b. Insert test plugs and securely brace.
   c. Fill the pipe and manhole with water to provide a positive differential head on the top of the pipe at the highest point of the pipeline under test of at least the test pressure specified in Section 15050, Piping Systems.
   d. The amount of water added to maintain this head shall be the leakage.
   e. Test for a period of at least four hours.
   f. Total leakage of any section tested shall not exceed the following rates:
      1) Gravity Sewer: 0.5 gallons per hour per 100 feet of pipe per inch diameter of pipe.

g. If the leakage in the section tested exceeds the specified amount, make the necessary repairs or replacements required to reduce the leakage to within the specified limits and the test shall be repeated until the leakage requirements is met.
h. On steep grades it may be necessary to place plugs in the pipe between manholes to avoid excessive pressures in the pipe.

4. Visual Inspection:
   a. Prior to final acceptance, a visual inspection by ENGINEER of all appurtenant structures, (e.g., manholes, chambers, etc.), shall be required. Any visual leaks, regardless of their magnitude shall be repaired by CONTRACTOR.
5. Watertight Sewers:
   a. It is imperative that all sewers and appurtenant structures be constructed as watertight as practicable. Adhere rigidly to all requirements of the Contract Documents and follow all directions of the ENGINEER to secure a watertight sewer. If, during the Work or after its completion, any leaks are discovered, they shall be repaired in a satisfactory manner at the expense of CONTRACTOR even though the pipe and appurtenant structures may have already successfully passed the leakage tests.

D. Sanitary Sewer Manhole Testing:
   1. Manholes shall be tested for water tightness per MAG Standard Specification Section 611.

E. Vertical Deflection Test for Thermoplastic Pipe:
   1. The vertical deflection test shall be conducted after the final backfill has been in place at least 30 days.
   2. Manually pull a pin-type vertical gauge mounted on a sled through the pipe. Gauge shall be set so that if vertical deflection of pipe exceeds five percent, it will stop. Excavate and reinstall all such piping. Gauge shall be as manufactured by Quality Test Products, or equal.

3.14 DISPOSAL OF WATER

A. Provide suitable means for disposal of test and flushing water so that no damage results to facilities or waterways.

B. Means of disposal of test and flushing water shall be subject to the approval of ENGINEER, local governing authorities and regulatory agencies.

C. Responsibility belongs to CONTRACTOR for any damage caused by water disposal operations.

3.15 CLEANING

A. Cleaning:
   1. Thoroughly clean all piping and flush in a manner approved by ENGINEER, prior to placing in service.
   2. Piping 24-inches in diameter and larger shall be inspected from inside and all debris, dirt and foreign matter removed.

+ + END OF SECTION + +

SECTION 15106

THERMOPLASTIC PIPE

PART 1 - GENERAL

1.1 DESCRIPTION

A. Scope:
   1. Provide all labor, materials, equipment and incidentals as shown on the Drawings, specified and required to furnish and install and place in satisfactory service polyvinyl chloride (PVC) piping, fitting and specials.
   2. The extent of piping is shown on the Drawings and Section 15050, Piping Systems.

B. Coordination:
   1. Review installation procedures under other Sections and coordinate with the Work that is related to this Section.

1.2 QUALITY ASSURANCE

A. Manufacturer's Qualifications:
   1. Manufacturers of thermoplastic pipe and fittings shall have a minimum of five years of experience producing thermoplastic pipe and fittings, and shall be able to show evidence of at least five installations in satisfactory operation.

B. Reference Standards: Comply with applicable provisions and recommendations of the following, except as otherwise shown or specified.
   1. ASTM D 1598, Test Method for Time-to-Failure of Plastic Pipe Under Constant Internal Pressure.
   2. ASTM D 1599, Test Method for Short-Time Hydraulic Failure Pressure of Plastic Pipe, Tubing and Fittings.
   3. ASTM D 1784, Specification for Rigid Poly (Vinyl Chloride) (PVC) Compounds and Chlorinated Poly (Vinyl Chloride) (CPVC) Compounds.
   4. ASTM D 2122, Test Method for Determining Dimensions of Thermoplastic Pipe and Fittings.
   5. ASTM D 2774, Practice for Underground Installation of Thermoplastic Pressure Piping.
   6. ASTM D 2846, Specification for Chlorinated Poly (Vinyl Chloride) (CPVC) Plastic Hot- and Cold-Water Distribution Systems.
   7. ASTM D 3034, Specification for Type PSM Poly (Vinyl Chloride) (PVC) Sewer Pipe and Fittings.
   8. ASTM D 3139 Standard Specification for Joints for Plastic Pressure Pipes Using Flexible Elastomeric Seals

9. ASTM F 437, Specification for Threaded Chlorinated Poly (Vinyl Chloride) (CPVC) Plastic Pipe Fittings, Schedule 80.
10. ASTM F 439, Specification for Chlorinated Poly (Vinyl Chloride) (CPVC) Plastic Pipe Fittings, Schedule 80.
11. ASTM F 441, Specification for Chlorinated Poly (Vinyl Chloride) (CPVC) Plastic Pipe, Schedules 40 and 80.
12. ASTM F 477, Specification for Elastomeric Seals (Gaskets) for Joining Plastic Pipe.
13. ASTM F 493, Specification for Solvent Cements for Chlorinated Poly (Vinyl Chloride) (CPVC) Plastic Pipe and Fittings.
14. ASTM F 1417, Standard Practice for Installation Acceptance of Plastic Non-pressure Sewer Lines Using Low-Pressure Air
15. Standard No. 14, National Sanitation Foundation.
16. American National Standards Institute.

C. Shop Tests:
1. Piping manufacturer shall maintain a continuous quality control program. All PVC plastic molding materials used to manufacture pipe and fittings under this Section shall be tested for conformance to the requirements of ASTM D 3034.

1.3 SUBMITTALS

A. Shop Drawings: Submit for approval the following:
1. Detailed procedures to be used in jointing and installing piping system including manufacturer's recommendations.
2. Interfacing of piping system to equipment and appurtenances.
3. Detail requirements for burial, supports, anchors, guides, expansion joints, and all accessories required for a satisfactory piping system.
4. Bill of materials, indicating material composition of pipe, fittings and solvent, pressure rating, nominal size and its location on the piping installation drawings.
5. Certifications letter from pipe manufacturer confirming that the materials to be used are suitable for the intended service.
6. Comply with the requirements of Section 01332, Shop Drawing Procedures.
7. CONTRACTOR shall submit an electronic copy per Specification Section 01332, Shop Drawing Procedures.
8. A copy of this specification section, with addendum updates included, and all referenced and applicable sections, with addendum updates included, with each paragraph check-marked to indicate specification compliance or marked to indicate requested deviations from specification requirements. Check marks (✓) shall denote full compliance with a paragraph as a whole. If deviations from the specifications are indicated, and therefore requested by the CONTRACTOR, each deviation shall be underlined and denoted by a number in the margin to the right of the identified paragraph, referenced to a detailed written explanation of the reasons for requesting the deviation. The ENGINEER shall be the final

authority for determining acceptability of requested deviations. The remaining portions of the paragraph not underlined will signify compliance on the part of the CONTRACTOR with the specifications. Failure to include a copy of the marked-up specification sections, along with justification(s) for any requested deviations to the specification requirements, with the submittal shall be sufficient cause for rejection of the entire submittal with no further consideration.

B. Certificates: Submit certificates of compliance with referenced standards.

1.4 PRODUCT DELIVERY, HANDLING AND STORAGE

A. Delivery: All necessary precautions shall be taken to prevent damage to pipe fittings and other materials during shipment and delivery. All materials shall be securely fastened to truck or rail car to prevent movement or damage during shipment. All materials shall be inspected by CONTRACTOR, upon delivery to the site.

B. Handling: All pipe materials shall be handled to prevent damage. Pipe and fittings shall not be dropped, rolled, or pushed off from any height on delivery, storage or installation.

C. Storage: All pipe materials shall be stored off the ground. Pipe ends shall be secured by caps or plugs. Do not store pipe or fittings in sunlight. Pipe shall be stored to prevent sagging or bending. Store off the ground, under cover, and in a dry location.

PART 2 - PRODUCTS

2.1 MATERIALS

A. PVC Pipe:
   1. PVC pipe shall be SDR 26, conforming to ASTM D 3034.
   2. Pipe Compound shall conform to ASTM D1784 Cell Class 12454/12364, gaskets shall conform to ASTM F477, and integral bell joints shall conform to ASTM D3212.

2.2 DETAILED REQUIREMENTS

A. Workmanship: The pipe shall be homogeneous throughout and free from visible cracks, holes, foreign inclusions or other defects. The pipe shall be uniform in color, opacity, density, and other physical properties.

B. Dimensions and Tolerances: Dimensions and tolerances shall be measured in accordance with ASTM D 2122. The eccentricity of the inside and outside circumferences of the pipe walls shall not exceed 12 percent.

C. Sustained Pressure: The pipe shall not fail, balloon, burst, or weep as defined in ASTM D 1598.

D. Burst Pressure: The minimum burst pressure shall be determined in accordance with ASTM D 1599.

E. Meets or exceeds ASTM D3219 for joint tightness, including a 22-inch Hg vacuum and a 25-foot head pressure test. When testing/ qualifying the line, low pressure air testing is acceptable in accordance with ASTM F1417.

F. Marking: Marking on the pipe shall include the following, spaced at intervals of not more than five feet.
   1. Pipe nominal size.
   2. Pipe schedule.
   3. Specification of plastic material.
   4. Type and grade of plastic.
   5. Date and place of manufacture.

G. Piping and fittings shall be manufactured with a minimum of two percent of titanium oxide for ultraviolet protection.

2.3 ADAPTERS

A. Where required to join piping of different materials, provide the required adapters, as recommended by the thermoplastic pipe manufacturer.

PART 3 - EXECUTION

3.1 INSTALLATION

A. General:
   1. Refer to Section 15050, Piping Systems, Section 15051, Buried Piping Installation for piping installation, testing, cleaning and acceptance.
   2. Request instructions from ENGINEER before proceeding if there is a conflict between Contract Documents and manufacturer's recommendations.
   3. Pipe, fittings and accessories that are cracked, damaged, not identified or in poor condition will be rejected.

+ + END OF SECTION + +

SECTION 15108.1

CENTRIFUGALLY CAST, FIBERGLASS-REINFORCED POLYMER MORTAR PIPE

PART 1 - GENERAL

1.1 DESCRIPTION

A. Scope:
   1. Provide all labor, materials, equipment and incidentals as shown on the Drawings, as specified and as required to furnish and install centrifugally cast, fiberglass-reinforced polymer mortar piping.
   2. The extent of centrifugally cast fiberglass-reinforced polymer mortar pipe to be furnished is shown on the Drawings.

1.2 QUALITY ASSURANCE

A. Manufacturer's Qualifications:
   1. Manufacturers of centrifugally cast, fiberglass-reinforced polymer mortar pipe and fittings shall have a minimum of five years' experience of producing centrifugally cast, fiberglass-reinforced polymer mortar pipe and fittings, and shall be able to show evidence of at least five installations in satisfactory operation.

B. Reference Standards: Comply with applicable provisions and recommendations of the following, except as otherwise shown or specified.
   1. ASTM D 2412, Test Method for Determination of External Loading Character-istics of Plastic Pipe by Parallel-Plate Loading.
   2. ASTM D 3262, Specification for "Fiberglass" (Glass-Fiber-Reinforced Thermo-setting-Resin) Sewer Pipe.
   3. ASTM D 3681, Test Method for Chemical Resistance of "Fiberglass" (Glass-Fiber-Reinforced Thermosetting-Resin Pipe) in a Deflected Condition.
   4. ASTM D 4161, Specification for "Fiberglass" (Glass-Fiber-Reinforced Thermo-setting-Resin) Pipe Joints Using Flexible Elastomeric Seals.

C. Shop Tests:
   1. Manufacturer shall maintain a continuous quality control program and shall furnish the ENGINEER with certified test reports.
   2. Tests shall be witnessed by a Registered Professional Engineer or a member of ASTM, who may be an employee of the manufacturer. The Registered Professional Engineer shall seal and sign all test reports.
   3. Cut a three-foot section from each size pipe furnished, and perform the following tests using methods recommended by the ASTM:

a. ASTM D 2412, Test Method for Determination of External Loading Characteristics of Plastic Pipe by Parallel-Plate Loading.
b. ASTM D 3262, Specification for "Fiberglass" (Glass-Fiber-Reinforced Thermosetting-Resin) Sewer Pipe.
c. ASTM D 3681, Test Method for Chemical Resistance of "Fiberglass" (Glass-Fiber-Reinforced Thermosetting-Resin) Pipe in a Deflected Condition.

1.3 SUBMITTALS

A. Shop Drawings: Submit for approval the following:
1. Details of construction, fabrication, and specifications for pipe laminate construction.
2. Details of piping system including: Location of supports, fittings, anchors, and all accessories necessary for piping system.
3. Pipe laying schedules.
   a. Submit these with Shop Drawings required under Section 15051, Buried Piping Installation.
4. A copy of this specification section, with addendum updates included, and all referenced and applicable sections, with addendum updates included, with each paragraph check-marked to indicate specification compliance or marked to indicate requested deviations from specification requirements. Check marks (✓) shall denote full compliance with a paragraph as a whole. If deviations from the specifications are indicated, and therefore requested by the CONTRACTOR, each deviation shall be underlined and denoted by a number in the margin to the right of the identified paragraph, referenced to a detailed written explanation of the reasons for requesting the deviation. The ENGINEER shall be the final authority for determining acceptability of requested deviations. The CONTRACTOR shall furnish equipment and/or services as specified if an exception and/or deviation is rejected. The remaining portions of the paragraph not underlined will signify compliance on the part of the CONTRACTOR with the specifications. Failure to include a copy of the marked-up specification sections, along with justification(s) for any requested deviations to the specification requirements, with the submittal shall be sufficient cause for rejection of the entire submittal with no further consideration. The CONTRACTOR shall submit the preventive maintenance information package as part of the shop drawing submittal package to the ENGINEER for review and approval.

B. Test Reports: Submit reports for any tests required above with test specimens.

C. Certificates: Submit certificates of compliance with referenced standards.

1.4 PRODUCT DELIVERY, STORAGE AND HANDLING

A. Refer to Sections 15051, Buried Piping Installation.

PART 2 - PRODUCTS

2.1 SERVICE CONDITIONS

A. Centrifugally cast, fiberglass-reinforced polymer mortar piping system shall be specifically designed, constructed, and installed for the service intended and shall comply with the following service conditions.

B. Service Conditions:

Location:	**New Gravity Sewer Pipes (Open Cut)**	**New Gravity Sewer Pipe inside 86” Dia. (Outside Dia.) Steel Casing (Casing Carrier)**
Nominal Pipe Size (in):	66	66
Joint Type	FWC Coupling	Flush Reline
Pipe Pressure Class (psi):	25	25
Pipe Stiffness (psi):	46	71
Min. Wall Thickness (in):	1.27	1.45
Nominal Pipe Length (ft.):	20	20
Fluid Temperature (°F max):	100	100
Fluid Flow Max. (MGD):	28	28
Fluid Chemical Composition	Raw Wastewater	Raw Wastewater

2.2 MATERIALS

A. Resin Systems: The manufacturer shall use only polyester resin systems.

B. Glass Reinforcements: The reinforcing glass fibers used to manufacture the components shall be of the highest quality commercial grade E-glass filaments with binder and sizing compatible with impregnating resins.

C. Silica Sand: Sand shall be minimum 98 percent silica with a maximum moisture content of 0.2 percent.

D. Additives: Resin additives, such as curing agents, pigments, dyes, fillers, thixotropic agents, etc., when used, shall not detrimentally affect the performance of the product.

E. Elastomeric Gaskets: Gasket shall be a full face EPDM gasket with double fin on each side of center register. Overall coupling width and sealing surface shall be: 10" wide for pipe sizes 24" thru 54" in diameter and 11.5" wide for pipe sizes 57" thru 78" in diameter. Gaskets shall be supplied by qualified gasket manufacturers and be suitable for the service intended.

2.3 DETAILS OF CONSTRUCTION

A. Pipes: Manufacture pipe by the centrifugal casting process only, so it will result in a dense, non-porous, corrosion-resistant, consistent composite structure. Non-reinforced, unlined or statically cast polymer products are not acceptable. Pipes made with filament-winding construction either by continuous mandrel winding or reciprocating winding process are not allowed. The pipe shall meet the ASTM D3262 Standard Specification CELL LIMITS Type1, Liner 2, Grade 3 and Pipe Stiffness Class C or higher. The manufacturer of pipe materials must demonstrate a 5-year recent history of successful installations with over 2.5 million lineal feet in the United States for sanitary sewer service.

B. Joints: Unless otherwise specified, the pipe shall be field connected with fiberglass sleeve couplings that utilize built-in double fin integral elastomeric seal gasket made of EPDM rubber compound, which must be mechanically locked to FRP backing, as the sole means to maintain joint water tightness. The joints must meet the performance requirements of ASTM D4161, and be leak free after field testing.

C. Corrosion Liner: CCFRPM pipe liner shall be a non-reinforced layer of nominal 0.040 inches (40 mil) and maximum 0.100 inches (100 mil) flexibilized polyester resin as an integral part of pipe wall construction. No fiberglass material in the form of glass fabric, filament winding or otherwise shall be present in the liner layer

D. Fittings: Flanges, elbows, reducers, tees, wyes, laterals and other fittings shall be capable of withstanding all operating conditions when installed. They may be contact molded or manufactured from mitered sections of pipe joined by glass-fiber-reinforced overlays. Properly protected standard ductile iron, fusion-bonded epoxy-coated steel and stainless steel fittings may also be used.

E. Diameters: The actual outside diameter of the pipes shall be in accordance with ASTM D 3262.

F. Lengths: Pipe shall be supplied in nominal lengths of 20 feet. Actual laying length shall be nominal +1, -4 inches. At least 90% of the total footage of each size and class of pipe, excluding special order lengths, shall be furnished in nominal length sections

G. Wall thickness: The minimum wall thickness shall be the stated design thickness.

H. End Squareness: Pipe ends shall be square to the pipe axis with a maximum tolerance of 1/8-inch.

I. Product and Manufacturer: Provide one of the following:
   1. Hobas Pipe USA, Inc.
   2. Or equal.

2.4 MAINTENANCE TOOLS AND SPARE MATERIALS

A. If required, furnish and deliver the following tools and maintenance materials carefully boxed or packaged and plainly marked for recording:
   1. Names and addresses of all manufacturers of fiberglass reinforcements, resins, hardeners and components used to repair and maintain centrifugally cast, fiberglass-reinforced polymer mortar piping system.
   2. Contact Hobas Pipe USA Field Service department for review and inspection as required prior to ordering field repair materials.

B. Store and safeguard tools and materials until completion of the Work, at which time they shall be inventoried, delivered and placed in an area designated by OWNER.

2.5 MARKING FOR IDENTIFICATION

A. All pipe line materials shall be permanently marked with the following:
   1. Name or trademark of manufacturer.
   2. Pipe class and specification designation.
   3. Size and length dimensions.
   4. Date and place of manufacture.

PART 3 - EXECUTION

3.1 INSTALLATION

A. For buried piping installation, refer to Section 15051, Buried Piping Installation.

B. Pipe Handling: Use textile slings, other suitable materials or a forklift. Use of chains or cables is not recommended.

C. Jointing:
   1. Clean ends of pipe and coupling components.
   2. Apply joint lubricant to pipe ends and elastomeric seals of coupling. Use only lubricants approved by the pipe manufacturer.
   3. Use suitable equipment and end protection to push or pull the pipes together.
   4. Do not exceed forces recommended by the manufacturer for coupling pipe.
   5. Join pipes in straight alignment then deflect to required angle. Do not allow the deflection angle to exceed the deflection permitted by the manufacturer.

D. For pipe testing, refer to Section 15050, Piping Systems.

3.2 LEAKAGE TESTS

A. For buried piping leakage tests, refer to Section 15051, Buried Piping Installation.

B. Low Pressure Air Test: Each reach may be tested with air pressure (max 5 psi). The system passes the test if the pressure drop due to leakage through the pipe or pipe joints is less than or equal to the specified amount over the prescribed time period.

C. Individual Joint Testing: For pipes large enough to enter, individual joints may be pressure tested with a portable tester to 5 psi max. with air or water in lieu of line infiltration, exfiltration or air testing.

D. Deflection: Maximum allowable long-term deflection is normally 5% of the initial diameter.

+ + END OF SECTION + +

EXHIBIT D

ACCEPTED GMP/PRICE PROPOSAL

INDEX OF EXHIBITS

LOOP 101 AND 202 FREEWAY
66-INCH REDUNDANT SEWER PROJECT
COC Project No.: WW2402.401
Guaranteed Maximum Price

Table of Contents

- Exhibit D1: Scope of Work
- Exhibit D2: GMP Coversheet
- Exhibit D3: Schedule of Values
- Exhibit D4: List of GMP Documents
- Exhibit D5: GMP CPM Schedule
- Exhibit D6: Cashflow Chart
- Exhibit D7: Risk Register
- Exhibit D8: Supplemental Reports
- Exhibit D9: Vendor Quotes & Backup

EXHIBIT D1: SCOPE OF WORK
LOOP 101 AND 202 FREEWAY
66-INCH REDUNDANT SEWER PROJECT
COC Project No.: WW2402.401
Guaranteed Maximum Price

PROJECT OVERVIEW

The project includes installing a redundant 66" diameter gravity sewer line that crosses the Loop 202 Santan Freeway. The new 66" diameter gravity sewer line installations consist of approximately 776 linear feet of open cut installation, 639 linear feet of trenchless 66-inch sewer line installation within an 88-inch steel casing that crosses the Loop 202, 4 new junction structures, and 4 each new 60" polymer concrete manholes with 96" precast bases. The new gravity sewer system also includes installing 203 linear feet of 48" PVC SDR-26 sewer line, removing sections of existing 48" sewer lines for construction of the new system, and abandonment of those existing 48" sewer lines and corresponding structures. In addition, this project includes rehabilitating existing 30", 48", and 66" diameter sewer lines, which includes installation of cured-in-place pipe liners and polymer concrete manhole inserts.

SCOPE OF WORK

Below chart demonstrates the direct activities of the project to complete the work.

1	Mobilization And Demobilization	1	LS
2	SWPPP	15	MO
3	Install Pipe Plug Per MAG Standard Detail 427	8	EACH
4	Remove Existing 48" Sanitary Sewer As Needed For Construction Of New 66" (HOBAS) Pipe	63	LF
5	Grout Fill Existing 48" Sanitary Sewer To Extents Shown	387	LF
6	Abandon Existing 108" Dia Manhole 756009379	1	EACH
7	Abandon Existing Junction Structure No. 2	1	EACH
8	Furnish And Install 48" Sanitary Sewer (PVC SDR-26)	203	LF
9	Remove Existing Plug And Connect To Existing 66" Stub Out	1	EACH
10	Furnish & Install 66" Sanitary Sewer (Hobas FWC Coupling Joint)	776	LF
11	Remove Existing 66" Sanitary Sewer And Replace With 66" Hobas (FWC Coupling Joint Type)	110	LF
12	Furnish And Install 60" Polymer Concrete Sewer Manhole With 96" Precast Base	3	EACH
13	Remove Existing Manhole 756004803 And Replace With 60" Polymer Concrete Sewer Manhole With 96" Precast Base (MH No. 4)	1	EACH
14	Furnish & Install 66" Sanitary Sewer (Hobas Flush Reline Joint) Inside 86" Steel Casing	639	LF
15	Remove Existing 48" Sanitary Sewer Prior To Steel Casing	2	EACH

16	Furnish & Install New Junction Structure B	1	EACH
17	Furnish & Install New Junction Structure C	1	EACH
18	Furnish & Install Junction Structure D (60" Polymer Concrete Manhole With 84" Base)	1	EACH
19	Furnish & Install New Junction Structure E	1	EACH
20	Install 60" Polymer Concrete Manhole Insert And 30" Diameter Composite Frame/Cover (Inserts)	8	EACH
21	Install 60" Polymer Concrete Manhole And 30" Diameter Composite Frame/Cover (Tee-Style)	1	EACH
22	Install 48" Polymer Concrete Manhole And 30" Diameter Composite Frame/Cover (Tee Style)	4	EACH
23	Existing Junction Structure No. 1 (New 60" Polymer MH Stackout & Abandonment Of South MH)	1	EACH
24	Clean Existing 30" Sanitary Sewer	938	LF
25	Clean Existing 48" Sanitary Sewer	1,997	LF
26	Clean Existing 66" Sanitary Sewer	652	LF
27	Pipe Man Entry Cleaning & Detached Liner Removal	2,669	LF
28	Install 30" CIPP Liner	938	LF
29	Install 48" CIPP Liner	2,019	LF
30	Install 66" CIPP Liner	652	LF
31	48" East Bypass Pump Setup & Teardown	1	EACH
32	48" East Bypass Pump Operation	289	DY
33	Furnish & Install 84" Polymer Concrete Sewer Manhole On CIP Base	1	EACH
34	48" West Bypass Pump Setup & Teardown	1	EACH
35	48" West Bypass Pump Operation	122	DY
36	General Conditions	15	MO

BID ITEM INCLUSIONS:

1. Mobilization/Demobilization
    a. Includes a onetime round trip for personnel, equipment, and supplies. Project delays caused by Owner that result in demobilization of personnel and/or equipment are not included, and any additional costs incurred are a change in scope.
    b. Monthly internet fees and connex box rental.
    c. Yard maintenance and clean-up crew.
    d. Water meters for construction water.
    e. 4 each project signs.
    f. Jack and bore subcontractor mobilization and demobilization. Project delays that result in demobilization of personnel and/or equipment are not included, and any additional costs incurred are a change in scope.

g. 1 each CIPP subcontractor mobilization.
h. Material delivery/freight for stop logs, 66” Hobas Pipe, and Armorock manholes and inserts.
i. Crew costs for unloading and stringing new 48” and 66” sewerline pipe.
j. Crew and crane costs for offloading Armorock structures, staging material in yard, handling material, and transporting material to on-site location.
k. Large excavator transport costs for mobilizing, on-site equipment moves from one site location to another, and demobilizing from the site.

2. SWPPP
   a. B&F utilizes a third-party service to provide the SWPPP project book and complete the inspections and record keeping. This cost is included in this item.
   b. BMP materials to protect drainage inlets from storm water runoff.
   c. Street sweeping for 168 hours which will be expected at 12 hours per month during construction.
   d. NOI and Dust Control Permit
   e. Labor and equipment to perform setup of SWPPP and routine maintenance of the site cleaning and repairing and replacing BMPs weekly as needed.
3. Install Pipe Plug Per MAG Standard Detail 427
   a. Includes all labor, equipment, and shoring to install 8 each pipe plugs on to-be abandoned existing pipe sections called out on Sheet No. D-1.0 Note 3 (Plug Pipe Per MAG Standard Detail 427) and Note 4 (Plug Existing 48” Dia. Pipe From Within MH 7560009379 Per MAG Standard Detail 427 to Avoid Removal of ADOT Irrigation Ditch).
   b. Includes materials for brick and mortar pipe plugs per MAG Standard Detail 427.
4. Remove Existing 48" Sanitary Sewer As Needed For Construction Of New 66" Sewer
   a. Labor, equipment, and shoring to cut and remove existing 48” sanitary sewer between existing manholes 756004803 and 756007413.
   b. Trucking costs for hauling off and disposing of spoils and existing pipe to be removed.
   c. Subcontractor costs for cutting pipe ends prior to removing pipe.
5. Grout Fill Existing 48" Sanitary Sewer
   a. Scope includes grout filling the existing 48-inch sewerline to-be abandoned, which is called out on Sheet D-1.0
   b. Labor, equipment, and shoring to assemble pipe plugs with grout connection and connect grout pump.
   c. Grout pump and labor to fill each pipe to be abandoned with grout.
   d. Grout or CLSM material to fill existing pips with.
6. Abandon Existing 108" Dia. Manhole 756009379
   a. Labor and equipment to abandon existing Manhole 756009379 in place.
   b. Material and crew costs for filling manhole with ½ sack ABC slurry in lifts.
7. Abandon Existing Junction Structure No. 2
   a. Labor and equipment to abandon existing junction structure no. 2 by removing the manhole lids, concrete rings, and riser and grout filling.
   b. Includes trucking and disposals costs for removing lids, concrete rings, and riser.
   c. ½ Sack ABC slurry for filling existing junction structure no. 2.
8. Furnish & Install 48" Sanitary Sewer (PVC SDR-26)

a. Labor, equipment, and shoring for excavating, installing, and backfilling new 48″ sewerline per Project Drawings.
b. Trucking and dump fees for haul-off and disposal of spoils.
c. Sewerline testing.
d. Compacted MAG Spec ABC for pipe bedding.
e. ½ Sack ABC Slurry backfill from top of bedding to 12″ above top of pipe.
f. MAG spec ABC backfill from 12″ above top of pipe to 1 foot below finished grade.
g. Material purchase for 48″ PVC SDR-26 sewerline pipe.

9. Remove Existing Plug And Connect To Existing 66" Stub Out
    a. Labor, equipment, and shoring to excavate, expose, and remove pipe plug from existing 66″ sewer stub-out.
    b. Trucking and dump fees for spoil materials.
    c. Hydro excavation crew time for soft digging around existing sewer stub-out.
10. Furnish & Install 66" Sanitary Sewer (Hobas FWC Coupling Joint)
    a. Labor, equipment, and shoring for excavating, installing, and backfilling new 66″ Hobas sewerline per Project Drawings.
    b. Trucking and dump fees for haul-off and disposal of spoils.
    c. Sewerline testing.
    d. MAG Spec ABC for pipe bedding
    e. ½ Sack ABC Slurry backfill from top of bedding to 12″ above top of pipe.
    f. MAG spec ABC backfill from 12″ above top of pipe to 1 foot below finished grade.
    g. Material purchase for 66″ Hobas sewerline pipe.
11. Remove Existing 66″ Sanitary Sewer and Replace With 66" HObas (FWC Coupling Joint)
    a. Labor, equipment, haul-off, dump fees, and shoring for removing existing existing 66″ RCP sewer between new Price Junction Structure on existing alignment, excavating, installing, and backfilling new 66″ Hobas sewerline per Project Drawings.
    b. Trucking and dump fees for haul-off and disposal of spoils.
    c. Sewerline testing.
    d. MAG Spec ABC for pipe bedding
    e. ½ Sack ABC Slurry backfill from top of bedding to 12″ above top of pipe.
    f. MAG spec ABC backfill from 12″ above top of pipe to 1 foot below finished grade.
    g. Material purchase for 66″ Hobas sewerline pipe.
12. Furnish & Install 60" Polymer Concrete Sewer Manhole With 96" Precast Base (New 66" Sewer Line)
    a. Includes manhole number 1, 2, and 3.
    b. Labor, equipment, and shoring for excavating, installing, and backfilling 2 each new 60″ polymer concrete manholes with 96″ precast bases per Project Drawings.
    c. Trucking and dump fees for haul-off and disposal of spoils.
    d. Vacuum testing structure after backfill.
    e. Final adjustments and concrete collars.
    f. ½ Sack ABC Slurry backfill.
    g. Purchase of precast manhole material from Armorock.
    h. Crane to set manholes.
    i. Owner supplies manhole frame and covers.
13. Remove Existing Manhole 756004803 And Replace With 60" Polymer Concrete Sewer Manhole With 96" Precast Base

a. Includes costs for removing existing manhole 756004803 and installing new manhole no. 4 per Project Drawings.
b. Labor, equipment, and shoring for excavating, installing, and backfilling 1 each new 60″ polymer concrete manholes with 96″ precast base per Project Drawings.
c. Trucking and dump fees for haul-off and disposal of spoils.
d. Sawcut and removal of existing pipe.
e. Vacuum testing structure after backfill.
f. Final adjustments and concrete collars.
g. ½ Sack ABC Slurry backfill.
h. Purchase of precast manhole material from Armorock.
i. 48″ PVC SDR-26 sewerline pipe material for stub-out and 1 each pipe collar to connect to existing 48″ on west side of new manhole. No end treatment of cut pipe included since pipe collar will be CIPP lined through.
j. Crane to set manhole.
k. Owner supplies manhole frame and cover.

14. Furnish & Install 66" Sanitary Sewer (Hobas Flush Reline Joint) Inside 86" Steel Casing
    a. Labor and equipment to excavate jack and bore pits, set shoring, remove shoring, and back fill pits.
    b. Trucking and dump fees for hauling off jack and bore pits spoils and casing installation spoils.
    c. MAG specs for ABC backfill jack and bore pits.
    d. Jack and bore subcontractor costs for furnishing, installing, and welding 86″ O.D. steel casing (84″ I.D.), installing 66″ Hobas pipe through steel casing, grouting void outside of casing, and filling annular space with low density cellular grout.
    e. Crew costs for loading trucks to haul off spoils from casing installation.
    f. Trench shore protection rental.
    g. Temporary fence for securing jack and bore pits.
    h. Purchase of 66″ Hobas Pipe to be pushed through casing.
15. Remove Existing 48" Sanitary Sewer Prior To Steel Casing
    a. Labor, equipment, and shoring for excavating and exposing existing 48″ sewerlines to be removed for steel casing installation at stations 107+96 and 108+65.
    b. Sawcutting and removing pipe
    c. Trucking and dump fees for haul-off of spoils and removed sewer pipe.
    d. ½ Sack ABC Slurry backfill off 2 each excavations.
16. Furnish & Install New Junction Structure B
    a. Labor and equipment to excavate and set slide rail for cast-in-place structure installation and set and prep subgrade for structure.
    b. Crane for setting and removing slide rail.
    c. MAG Spec ABC for structure subgrade/foundation installation and preparation.
    d. Trucking and dump fees for spoil haul-off.
    e. ½ Sack ABC Slurry backfill around structure.
    f. Slide rail shoring system rental and Engineering.
    g. Furnishing and installing PVC T-Lock per Project Drawings.
    h. Cast-in-place Structure Subcontractor costs for reinforcing, forming, and pouring structure.
    i. Material purchase costs for Plastifab stop logs, davit crane, access hatch, and grating. Note material deviation, per Plastifab, guide frames are surface mounted

with unseating head, so they will need to be stainless steel in lieu of the specified vinyl ester FRP.

j. Owner supplies manhole frames and covers.

17. Furnish & Install New Junction Structure C
    a. Labor and equipment to excavate, set slide rail, install, and backfill 192” round precast polymer structure installation.
    b. Hydro excavation around corners for slide rail installation.
    c. Crane for setting/removing slide rail and setting structure.
    d. MAG Spec ABC for structure subgrade.
    e. Trucking and dump fees for spoil haul-off.
    f. ½ Sack ABC Slurry backfill around structure.
    g. Slide rail shoring system rental and Engineering.
    h. Vacuum testing of new structure.
    i. Purchase of 192” Armorock polymer precast structure, hatches, FRP grating, stop logs, and davit crane.
    j. Note material deviation, per Plastifab, guide frames are surface mounted with unseating head, so they will need to be stainless steel in lieu of the specified vinyl ester FRP.
    k. Labor and equipment for installing FRP grating.
    l. Owner supplies manhole frames and covers.
18. Furnish & Install Junction Structure D (60" Polymer Concrete Manhole With 84" Base)
    a. Labor, equipment, and shoring for excavating, installing, and backfilling 1 each new 60” polymer concrete manhole with an 84” precast base per Project Drawings.
    b. Trucking and dump fees for haul-off and disposal of spoils.
    c. Sawcut and removal of existing pipe.
    d. Vacuum testing structure after backfill.
    e. Final adjustments and concrete collars.
    f. ½ Sack ABC Slurry backfill.
    g. Purchase of precast manhole material from Armorock.
    h. 48” PVC SDR-26 sewerline pipe material for stub-out and 1 each pipe collar to connect to existing 48” sewerline on east side of new structure.
    i. FRP end treatment on existing pipe end to be connected to and collar poured around.
    j. Crane to set manhole.
    k. Owner supplies manhole frame and cover.
19. Furnish & Install New Junction Structure E
    a. Labor and equipment to excavate, demo and remove existing MH 756007413, set slide rail, install new junction structure, and backfill around 192” round precast polymer structure installation.
    b. Hydro excavation around corners for slide rail installation.
    c. Crane for setting/removing slide rail and setting structure.
    d. Sawcutting and removing existing pipe.
    e. MAG Spec ABC for structure subgrade.
    f. Trucking and dump fees for spoil haul-off.
    g. ½ Sack ABC Slurry backfill around structure.
    h. Slide rail shoring system rental and Engineering.
    i. Vacuum testing of new structure.
    j. Purchase of 192” Armorock polymer precast structure, hatches, and FRP grating.

k. Labor and equipment for installing FRP grating.
l. Owner supplies manhole frames and covers.

20. Install 60" Polymer Concrete Manhole Insert and 32" Diameter Smart Composite Cover
    a. Labor and equipment to excavate around existing manhole, remove and haul off existing manhole cones, and install 60" polymer concrete manhole inserts.
    b. Trucking and dump fees for cone and spoil disposal.
    c. Purchase 60" Armorock polymer manhole inserts.
    d. Preparation of bench to accept composite insert.
    e. Bench rehabilitation includes rebuilding bench with C-120, installing FRP, and overlapping FRP onto polymer concrete manhole insert.
    f. Final adjustments and concrete collars.
    g. Hydrophilic grout between annular space between existing manhole barrel sections and new polymer concrete manhole insert.
    h. Slurry backfill around manhole.
    i. 1 each location, specifically MH 756005216 along Price Road, for concrete flatwork replacement.
    j. 1 each location, specifically MH 756005162 in Pecos Diversion structure facility, for asphalt replacement.
    k. Owner supplies manhole frames and covers.
21. Install 60" Polymer Concrete Manhole and 30" Diameter Composite Frame/Cover (Tee-Style)
    a. Labor and equipment to excavate and remove existing manhole to tee-style base, prep tee-style base for wet set of new bottom polymer section, install new 60" polymer risers and cone/flat top, and slurry backfill with ½ Sack ABC Slurry.
    b. Trucking and dump fees for manhole removal and excavation.
    c. Purchase 60" Armorock polymer manhole materials.
    d. Installing FRP to overlap CIPP lining and new polymer manhole riser bottom section.
    e. Final adjustments and concrete collars.
    f. Slurry backfill around manhole.
    g. Owner supplies manhole frames and covers.
22. Install 48" Polymer Concrete Manhole and 30" Diameter Composite Frame/Cover (Tee-Style)
    a. Labor and equipment to excavate and remove existing manhole to tee-style base, prep tee-style base for wet set of new bottom polymer sections, install new 48" polymer risers and cone/flat top, and slurry backfill with ½ Sack ABC Slurry.
    b. Trucking and dump fees for manhole removal and excavation.
    c. Purchase 48" Armorock polymer manhole materials.
    d. Installing FRP to overlap CIPP lining and new polymer manhole riser bottom section.
    e. Final adjustments and concrete collars.
    f. Slurry backfill around manhole.
    g. Owner supplies manhole frames and covers.
23. Existing Junction Structure No. 1 (New 60" Polymer MH Stackout & Abandonment of South MH)
    a. Labor and equipment to excavate and remove existing manhole riser sections on existing Junction Structure No. 1, prep tee-style base for wet set of new bottom

polymer section, install new 60” polymer riser and cone/flat top, and slurry backfill with ½ Sack ABC Slurry.

b. FRP will be installed to overlap CIPP to-be lined through structure and overlap onto new polymer bottom riser section per Project Drawings.
c. South manhole will be completely removed, CIPP lined through, and backfilled.
d. Trucking and dump fees for manhole removal and excavation.
e. Purchase 60” Armorock polymer manhole materials.
f. Final adjustment and concrete collar.
g. Slurry backfill structure.
h. Owner supplies manhole frames and covers.

24. Clean Existing 30" Sanitary Sewer
    a. Sewer cleaning vactor crew and CCTV crew for performing 3-pass cleaning of existing 30” sewerline.
25. Clean Existing 48" Sanitary Sewer
    a. Sewer cleaning vactor crew and CCTV crew for performing 3-pass cleaning of existing 48” sewerline.
26. Clean Existing 66" Sanitary Sewer
    a. Sewer cleaning vactor crew and CCTV crew for performing 3-pass cleaning of existing 66” sewerline.
27. Man Entry Cleaning & Detached Liner Removal
    a. Labor and confined space equipment to complete entry to remove any detached T-Lock from pipe.
    b. Any grouting to be compensated through Construction Contingency.
28. Install 30" CIPP Liner
    a. Furnish and install 30” CIPP Liner per project documents.
    b. CIPP lining support crew.
    c. Post-Pano sewer CCTV inspection.
    d. Modify manhole bench for CIPP liner installation.
29. Install 48" CIPP Liner
    a. Furnish and install 48” CIPP Liner per project documents.
    b. Lining water usage to be compensated through allowance item.
    c. CIPP lining support crew.
    d. Post-Pano sewer CCTV inspection.
30. Install 66" CIPP Liner
    a. Furnish and install 66” CIPP Liner per project documents.
    b. CIPP lining support crew.
    c. Lining water usage to to be compensated through allowance item.
    d. If required, chilled water setups and/or styrene mitigation shall be compensated through Construction Contingency.
    e. Post-Pano sewer CCTV inspection.
31. 48" East Bypass Pump Setup & Teardown
    a. Complete bypass setup costs for 48” bypass from suction pit to discharge into existing manhole 756009379.
    b. Excavation of suction pit, cutting coupon, installing temporary CMP tank for suction pit, installing concrete in suction pit, restoring coupon, removing CMP tank, backfilling, and restoring.
    c. Labor, equipment, and transport costs for mobilizing and demobilizing bypass pumps, pipe, and equipment.

d. Bypass pump station setup with 3 each 12” pumps.
e. Trenching and burying bypass lines to maintain SRP, ADOT, and construction access.
f. Fuse and install 1 each 18” discharge lines with each line being approximately 700 linear feet and pass hydrostatic test HDPE discharge line.
g. Bypass pump station and pipe removal.
h. Bypass discharge location prep and setup for discharge line installation.
i. Bypass Engineering Stamp.

32. 48" East Bypass Pump Operation
    a. All equipment rental for 289 calendar days.
    b. Fuel for pumps for 289 calendar days based on $4.00 per gallon. Fuel escalation will be based on the EIA.gov Rock Mountain market rate and compensation will be paid through Contractor’s Contingency based of area average fuel rate index, if market increases above $4.00 per gallon for over a 30-day period.
    c. Pump operators and bypass monitors for 24 hours per day. 1 operator/monitor during day-time work hours and 2 each operators/monitors for after hours.
    d. Includes disposal of rags that are removed from pumps.
    e. Includes maintenance of equipment.
    f. Includes secondary containment for all equipment.
    g. All valves, manifolds, pipe, fittings, fencing/barriers, and equipment rental.
    h. Includes light tower.
33. Furnish & Install 84” Polymer Concrete Sewer Manhole on Cast-In-Place Base
    a. Pricing is based on preliminary and conceptual discussions only. Pricing includes installing a new 84” manhole on a cast-in-place base north of the Pecos Diversion Structure, which will also be utilized as the suction manhole for the west bypass.
    b. Includes labor, equipment, and shoring to excavate down to existing pipe, cut coupon, and pour cast-in-place base around existing 48” sewerline.
    c. Concrete cast-in-place structure crew to perform reinforcing, forming, and pouring of manhole bases per detail provided in 90% Design Review Comments.
    d. Includes concrete material for cast-in-place bases.
    e. FRP bench treatment for cast-in-place base.
    f. ½ Sack ABC Slurry backfill around structures.
    g. Hydro excavation around existing pipe
    h. Final manhole adjustments and concrete collars.
    i. Owner supplies manhole frames and covers.
34. 48" West Bypass Pump Setup & Teardown
    a. Complete bypass setup costs for 48” bypass from new manhole north of Pecos Diversion Structure to discharge into existing manhole 756009379.
    b. Labor, equipment, and transport costs for mobilizing and demobilizing bypass pumps, pipe, and equipment.
    c. Bypass pump station setup with 3 each 12” pumps.
    d. Trenching and burying bypass lines to maintain SRP, ADOT, and construction access.
    e. Fuse and install 1 each 18” discharge lines with each line being approximately 2,550 linear feet and pass hydrostatic test HDPE discharge line.
    f. Bypass pump station and pipe removal.
    g. Bypass discharge location prep and setup for discharge line installation.
    h. Bypass Engineering Stamp.

35. 48" West Bypass Pump Operation
    a. All equipment rental for 122 calendar days.
    b. Fuel for pumps for 122 calendar days based on $4.00 per gallon. Fuel escalation will be based on the EIA.gov Rock Mountain market rate and compensation will be paid through Contractor's Contingency based of area average fuel rate index, if market increases above $4.00 per gallon for over a 30-day period.
    c. Pump operators and bypass monitors for 24 hours per day. 1 operator/monitor during day-time work hours and 2 each operators/monitors for after hours.
    d. Includes disposal of rags that are removed from pumps.
    e. Includes maintenance of equipment.
    f. Includes secondary containment for all equipment.
    g. All valves, manifolds, pipe, fittings, fencing/barriers, and equipment rental.
    h. Includes light tower.

ALLOWANCES

100. Traffic Control (Allowance)
    a. This will be all costs associated with Traffic Control including but not limited to traffic control plans, permits, devices, labor, equipment, temporary pedestrian relocation, light bagging, etc.
    b. Visual Message Boards
101. Police Officer (Allowance)
    a. This will cover all cost associate with police officers' presence on the site during work near a lighted intersection.
    b. The intent will always be to offer the work to Chandler PD prior to allowing other officers to work on the project.
102. Quality Control Testing (Allowance)
    a. All costs associated with testing on the project including but not limited to compaction, concrete cylinder, sieve analysis, proctor, etc.
103. Construction Water (Allowance)
    a. Cost for water on the project for all activating including but not limited to dust mitigation, testing, CIPP, pipe cleaning, etc.
    b. This will be reimbursed with the bills backing up the charges with all associated markups.
104. Public Outreach (Allowance)
    a. Cost for all required public outreach efforts including but not limited to public meetings, websites, hotline management, flyers, door hanger, labor for distribution, email correspondence, data collection, etc.
105. T-Lock Grouting (Allowance)
    a. The grouting behind deteriorated concrete inside pipe during inspections and cleaning efforts.
106. Heavy Cleaning (Allowance)
    a. Cleaning of heavy debris inside pipe with man entry and extraction to waste.
107. Landscape Restoration (Allowance)
    a. Landscape restoration due to work in landscape areas.
108. SRP Observer (Allowance)

a. Allowance to reimburse any costs associated with SRP observers required for construction activities near SRP easement or powerlines.

109. Survey (Allowance)
    a. Allowance to capture all GIS survey data for the city.
110. Odor Control (Allowance)
    a. Allowance to capture all costs associated with additional Odor Control required beyond tarping bypass suction and discharge locations.
111. Pecos Diversion Structure Rehab & Sluice Gates (Allowance)
    a. Allowance shall be utilized to reimburse costs for stripping and coating existing Pecos Diversion Structure, removing and replacing 2 each sluice gates, costs for sluice gates and hardware, motor operated sluice gate valves, stems, anchors, electrical connections for motor operated sluice gate valves, etc.

CONTINGENCY

500. Contractor's Contingency
    a. Proposed Contractor's Contingency amount is based on risk matrix included in this GMP.
501. Owner Contingency
    i. The Owner's Contingency is based on 5% of the contract value.

EXHIBIT D

CM@RISK GMP SUMMARY (PAGE 2 of 2)

Project Name: 101/202 66-inch Redundant Sewer GMP

Date: 8/12/2025

Project Location: Price Road and 202

City of Chandler Project No.: WW2402.401

					Amount
A. Cost of Work					
A1 Cost of Work (self perform, no mark-up)					$10,879,284.64
A2 Cost of Work (subcontractors, suppliers, material)					$13,052,205.73
				TOTAL COST OF WORK:	**$23,931,490.37**
B. General Conditions					**$1,357,246.35**
				SUBTOTAL 1 (Cost of Work) (A + B):	**$25,288,736.72**
C. CM@Risk's Fee					**$2,149,542.62**
				SUBTOTAL 2 (A + B + C):	**$27,438,279.34**
D. Bonds and Insurance (on Subtotal 1)					
D1 Bonds (Payment and Performance) @ 1.0%					$252,887.37
D2 Insurance @ 1.1%					$278,176.10
D3 Builder's Risk Insurance					$84,000.00
				TOTAL BONDS & INSURANCE:	**$615,063.47**
				SUBTOTAL 3 (SUBTOTAL 2 + BONDS & INS):	**$28,053,342.81**
E. Sales Tax					
E1 Sales Tax (7.8% x 0.65)					$1,422,304.48
E2 Tax Credits					$0.00
				TOTAL SALES TAX:	**$1,422,304.48**
F. Approved Allowances	QTY	UOM		**Unit Price**	**Allowance Total**
100 Traffic Control	1	AL		$ 46,000.00	$46,000.00
101 Police Officer	1	AL		$ 14,490.00	$14,490.00
102 Quality Control Testing	1	AL		$ 86,250.00	$86,250.00
103 Construction Water	1	AL		$ 57,500.00	$57,500.00
104 Public Outreach	1	AL		$ 15,000.00	$15,000.00
105 T-Lock Grouting Allowance	40	HR		$ 704.90	$28,196.08
106 Heavy Cleaning Allowance	1	AL		$ 66,125.00	$66,125.00
107 Landscape Restoration	1	AL		$ 15,000.00	$15,000.00
108 SRP Observer	1	AL		$ 52,900.00	$52,900.00
109 Survey	1	AL		$ 54,050.00	$54,050.00
110 Odor Control	1	AL		$ 197,000.00	$197,000.00
111 Pecos Diversion Structure Rehab & Sluice Gates	1	AL		$ 466,900.00	$466,900.00
				TOTAL ALLOWANCES:	**$1,099,411.08**
G. Contingencies					
G1 Contractors Contigency					$2,545,652.66
G2 Owner Contingency					$1,528,752.92
				TOTAL CONTINGENCIES:	**$4,074,405.57**
				GUARANTEED MAXIMUM PRICE TOTAL:	**$34,649,463.94**

Establishment of Values:

a. Cost of Work (A) and Allowances (F) to be submitted with GMP Proposal.

b. General Conditions Cost (B) to be established in Baseline GMP.

c. CM@Risk Fee as set forth in Section 3.7.3 of this Contract

CITY OF CHANDLER
WW2402.401 LOOP 101 AND 202 FREEWAY 66-INCH REDUNDANT SEWER PROJECT
GMP SCHEDULE OF VALUES

A	B	C	D	E	F
ITEM NO.	DESCRIPTION OF WORK	QTY	UNIT OF MEASURE	UNIT PRICE	SCHEDULED VALUE
1	Mobilization And Demobilization	1	LS	$ 1,070,395.41	$ 1,070,395.41
2	SWPPP	15	MO	$ 6,621.58	$ 99,323.70
3	Install Pipe Plug Per MAG Standard Detail 427	8	EACH	$ 10,050.84	$ 80,406.72
4	Pipe	63	LF	$ 1,039.65	$ 65,497.95
5	Grout Fill Existing 48" Sanitary Sewer To Extents Shown	387	LF	$ 212.93	$ 82,403.91
6	Abandon Existing 108" Dia Manhole 756009379	1	EACH	$ 27,020.66	$ 27,020.66
7	Abandon Existing Junction Structure No. 2	1	EACH	$ 65,995.34	$ 65,995.34
8	Furnish And Install 48" Sanitary Sewer (PVC SDR-26)	203	LF	$ 1,377.18	$ 279,567.54
9	Remove Existing Plug And Connect To Existing 66" Stub Out	1	EACH	$ 15,331.12	$ 15,331.12
10	Furnish & Install 66" Sanitary Sewer (Hobas FWC Coupling Joint)	776	LF	$ 2,061.63	$ 1,599,824.88
11	Type)	110	LF	$ 4,489.87	$ 493,885.70
12	Furnish And Install 60" Polymer Concrete Sewer Manhole With 96" Precast Base	3	EACH	$ 189,772.58	$ 569,317.74
13	Manhole With 96" Precast Base (MH No. 4)	1	EACH	$ 348,571.50	$ 348,571.50
14	Furnish & Install 66" Sanitary Sewer (Hobas Flush Reline Joint) Inside 86" Steel Casing	639	LF	$ 5,973.99	$ 3,817,379.61
15	Remove Existing 48" Sanitary Sewer Prior To Steel Casing	2	EACH	$ 83,716.80	$ 167,433.60
16	Furnish & Install New Junction Structure B	1	EACH	$ 3,098,028.38	$ 3,098,028.38
17	Furnish & Install New Junction Structure C	1	EACH	$ 1,263,349.01	$ 1,263,349.01
18	Furnish & Install Junction Structure D (60" Polymer Concrete Manhole With 84" Base)	1	EACH	$ 313,292.32	$ 313,292.32
19	Furnish & Install New Junction Structure E	1	EACH	$ 1,176,438.77	$ 1,176,438.77
20	(Inserts)	8	EACH	$ 69,859.71	$ 558,877.68
21	Style)	1	EACH	$ 200,635.08	$ 200,635.08
22	Style)	4	EACH	$ 132,459.19	$ 529,836.76
23	South MH)	1	EACH	$ 95,414.07	$ 95,414.07
24	Clean Existing 30" Sanitary Sewer	938	LF	$ 10.28	$ 9,642.64
25	Clean Existing 48" Sanitary Sewer	1,997	LF	$ 14.49	$ 28,936.53
26	Clean Existing 66" Sanitary Sewer	652	LF	$ 18.82	$ 12,270.64
27	Pipe Man Entry Cleaning & Detached Liner Removal	2,669	LF	$ 7.74	$ 20,658.06
28	Install 30" CIPP Liner	938	LF	$ 292.97	$ 274,805.86
29	Install 48" CIPP Liner	2,019	LF	$ 427.40	$ 862,920.60
30	Install 66" CIPP Liner	652	LF	$ 1,036.46	$ 675,771.92
31	48" East Bypass Pump Setup & Teardown	1	EACH	$ 274,833.54	$ 274,833.54
32	48" East Bypass Pump Operation	289	DY	$ 10,884.80	$ 3,145,707.20
33	Furnish & Install 84" Polymer Concrete Sewer Manhole On CIP Base	1	EACH	$ 278,133.06	$ 278,133.06
34	48" West Bypass Pump Setup & Teardown	1	EACH	$ 238,901.81	$ 238,901.81
35	48" West Bypass Pump Operation	122	DY	$ 17,136.73	$ 2,090,681.06
					$ 23,931,490.37
	General Conditions				
36	General Conditions	15	MO	$ 90,483.09	$ 1,357,246.35
	Subtotal with General Conditions				**$ 25,288,736.72**
	8.5% Markup				$ 2,149,542.62
	Total with OH&P				**$ 27,438,279.34**
	Insurance and Bond on Subtotal of CMAR Direct Work + Overhead & Profit				
	Bond Cost (1%)				$ 252,887.37
	Insurance Cost (1.1%)				$ 278,176.10
	Builder's Risk Insurance				$ 84,000.00
	Subtotal Bond and Insurance				**$ 615,063.47**
	Subtotal Bond and Insurance+ CMAR Direct Work + Overhead & Profit				**$ 28,053,342.81**
	Sales Tax				
	Sales Tax				$ 1,422,304.48
	Combined Total with Insurance, Bonds, & Tax				**$ 29,475,647.29**

CITY OF CHANDLER
WW2402.401 LOOP 101 AND 202 FREEWAY 66-INCH REDUNDANT SEWER PROJECT
GMP SCHEDULE OF VALUES

A	B	C	D	E	F
ITEM NO.	DESCRIPTION OF WORK	QTY	UNIT OF MEASURE	UNIT PRICE	SCHEDULED VALUE
	ALLOWANCES				
100	Traffic Control	1	AL	$ 46,000.00	$ 46,000.00
101	Police Officer	1	AL	$ 14,490.00	$ 14,490.00
102	Quality Control Testing	1	AL	$ 86,250.00	$ 86,250.00
103	Construction Water	1	AL	$ 57,500.00	$ 57,500.00
104	Public Outreach	1	AL	$ 15,000.00	$ 15,000.00
105	T-Lock Grouting Allowance	40	HR	$ 704.90	$ 28,196.08
106	Heavy Cleaning Allowance	1	AL	$ 66,125.00	$ 66,125.00
107	Landscape Restoration	1	AL	$ 15,000.00	$ 15,000.00
108	SRP Observer	1	AL	$ 52,900.00	$ 52,900.00
109	Survey	1	AL	$ 54,050.00	$ 54,050.00
110	Odor Control	1	AL	$ 197,000.00	$ 197,000.00
111	Pecos Diversion Structure Rehab & Sluice Gates	1	AL	$ 466,900.00	$ 466,900.00
	Subtotal with Allowances				**$ 1,099,411.08**
500	Contractors Contingency	1	LS	$ 2,545,652.66	$ 2,545,652.66
501	Owner's Contingency	1	LS	$ 1,528,752.92	$ 1,528,752.92
	Subtotal of Contingency				**$ 4,074,405.57**
	ORIGINAL CONTRACT TOTALS				**$ 34,649,463.94**

B&F CONTRACTING Since 1990

Corporate:
11011 N. 23rd Ave. Phoenix, AZ 85029
Office: 623-582-1170 | Fax: 623-582-3761

Tucson:
1904 W Prince Rd. Tucson, 85705
Office: 520-207-8228 | Fax: 520-305-3323

AZ Licenses:
ROC089744 A | General Engineering
ROC111282 B-04 | General Engineering Contractor

Proposal

Cost Detail With Man Hours

Project Name:	101/202 66 Inch Reduntant Sewer 90% GMP Rev1	**Customer:**	City of Chandler
Job Number:	24-4018-00 **Bid Number:** 24-4018-00	**Billing Address:**	Mail Stop 407, P.O. Box 4008
Bid As:	General Contractor		Chandler, AZ 85244
Estimator:	Travis Monk	**Phone:**	480-782-3310
Project Address:	Price Road And 202	**Contact:**	Raymond Potts
Completion Date:	4/10/2025		

Pay Items

Description	Quantity	UM	Man Hours	Man Hours per Unit	Unit Direct Cost	Total Direct Cost
1 - Mobilization And Demobilization	**1.00**	**LS**	**1,146.00**	**1,146.00**	**$1,070,395.41**	**$1,070,395.41**
Mobilize/ Demobilize Equipment	1.00	LS	336.00	336.00	$66,432.96	$66,432.96
B&F Equipment Mobilization (1.00 EACH/DY, 42.00 DY)	42.00	EACH	336.00	8.00	$1,388.88	$58,332.96
Transport Lowboy	336.00	HR			$33.43	$11,232.48
Transport Truck Semi	336.00	HR			$83.31	$27,992.16
Transport Truck Driver	336.00	HR			$56.87	$19,108.32
Shoring Deliveries/Pick-ups/Moves (Slide Rail Delivery Is Under Separate Item)	36.00	EACH			$225.00	$8,100.00
Office Startup / Establishment	1.00	EACH	0.00	0.00	$12,750.00	$12,750.00
Internet	15.00	MO			$300.00	$4,500.00
Connex	15.00	MO			$550.00	$8,250.00
Yard Crew	15.00	MO	330.00	22.00	$3,515.60	$52,734.00
Yard Clean-up & Maintenance (2.75 DY/MO, 41.25 DY)	15.00	MO	330.00	22.00	$3,515.60	$52,734.00
Cat 950	330.00	HR			$104.46	$34,471.80
Operator: Small Equipment	330.00	HR			$55.34	$18,262.20
Water Meters	2.00	EACH			$2,400.00	$4,800.00
Project Signs	4.00	EACH	32.00	8.00	$1,527.36	$6,109.44
Project Signs	4.00	EACH			$750.00	$3,000.00
Sign Installation Crew (3.00 EACH/DY, 1.33 DY)	4.00	EACH	32.00	8.00	$777.36	$3,109.44
F-250 to F-450	10.67	HR			$39.86	$425.17
Foreman	10.67	HR			$77.15	$822.93
Laborer	10.67	HR			$44.30	$472.53
Cat 420 Small Backhoe	10.67	HR			$74.86	$798.51
Operator: Small Equipment	10.67	HR			$55.34	$590.29
Unload & String Pipe	20.00	DY	240.00	12.00	$1,395.36	$27,907.20
Unload And String Pipe (2.00 DY/DY, 10.00 DY)	20.00	DY	240.00	12.00	$1,395.36	$27,907.20
F-250 to F-450	80.00	HR			$39.86	$3,188.80

Description	Quantity	UM	Man Hours	Man Hours per Unit	Unit Direct Cost	Total Direct Cost
(Item 1 - Mobilization And Demobilization continued)						
Foreman	80.00	HR			$77.15	$6,172.00
Laborer	80.00	HR			$44.30	$3,544.00
Operator: Large Equipment	80.00	HR			$60.68	$4,854.40
Cat TL1255 (12K Telehandler Forklift)	80.00	HR			$126.85	$10,148.00
Large Excavator(s) Mobilization/Site Moves/ Demobilization	12.00	EACH			$4,218.00	$50,616.00
Structures, Manholes, Inserts, & Pipe Material Handling At Yard And Deliver To Site	12.00	EACH	128.00	10.67	$7,338.49	$88,061.92
B&F Equipment Mobilization (3.00 EACH/DY, 4.00 DY)	12.00	EACH	32.00	2.67	$462.96	$5,555.52
Transport Lowboy	32.00	HR			$33.43	$1,069.76
Transport Truck Semi	32.00	HR			$83.31	$2,665.92
Transport Truck Driver	32.00	HR			$56.87	$1,819.84
Support & Spotter Crew (3.00 EACH/DY, 4.00 DY)	12.00	EACH	96.00	8.00	$870.53	$10,446.40
Cat 950	32.00	HR			$104.46	$3,342.72
Laborer	32.00	HR			$44.30	$1,417.60
Operator: Large Equipment	32.00	HR			$60.68	$1,941.76
Foreman	32.00	HR			$77.15	$2,468.80
F-250 to F-450	32.00	HR			$39.86	$1,275.52
Crane For Offloading Armorock Manhole Bases	3.00	EACH			$9,500.00	$28,500.00
Crane For Offroading Armorock Structures	2.00	EACH			$21,780.00	$43,560.00
Potholing	15.00	EACH	80.00	5.33	$894.83	$13,422.40
GC-Combo Hydro Truck Crew (3.00 EACH/DY, 5.00 DY)	15.00	EACH	80.00	5.33	$894.83	$13,422.40
Combo Vactor Truck	40.00	HR			$225.00	$9,000.00
Combo Truck Assistant	40.00	HR			$48.46	$1,938.40
Combo Truck Operator	40.00	HR			$62.10	$2,484.00
Material Delivery	1.00	LS	0.00	0.00	$445,790.65	$445,790.65
Stop Logs	1.00	LS			$15,525.00	$15,525.00
66" Hobas Pipe Delivery	1.00	LS			$117,600.00	$117,600.00
Armorock Polymer Structure & Insert Deliveries	1.00	EACH			$309,200.00	$309,200.00
Access Hatch Delivery Fees	1.00	LS			$3,465.65	$3,465.65
Subcontractor Mobilizations	1.00	LS	0.00	0.00	$296,770.84	$296,770.84
CIPP Mob (3 Each - 30", 48", And 66") W/ 1.5% Bond (Insituform Technologies LLC)	1.00	LS			$38,680.64	$38,680.64
Jack & Bore Subcontractor Mobilization (W/ 1.5% Bond)	1.00	EACH			$203,000.00	$203,000.00
CIP Structure B Subcontractor Mobilization (w/ 2% Bond) (CS Construction Inc)	1.00	LS			$55,090.20	$55,090.20
General Site Shoring Engineered Fees	2.00	EACH			$2,500.00	$5,000.00
2 - SWPPP	**15.00**	**MO**	**432.00**	**28.80**	**$6,621.58**	**$99,323.68**
SWPPP Permit And Book	1.00	LS			$6,500.00	$6,500.00
Inspections	44.00	EACH			$200.00	$8,800.00
BMP	1.00	LS			$10,500.00	$10,500.00
SWPPP Manitenance	15.00	MO	360.00	24.00	$2,427.76	$36,416.40
SWPPP Maintenance Crew (1.00 DY/MO, 15.00 DY)	15.00	MO	360.00	24.00	$2,427.76	$36,416.40
F-250 to F-450	120.00	HR			$39.86	$4,783.20
John Deere 210 Gannon / Skip Loader	120.00	HR			$86.82	$10,418.40

Description	Quantity	UM	Man Hours	Man Hours per Unit	Unit Direct Cost	Total Direct Cost
(Item 2 - SWPPP continued)						
Foreman	120.00	HR			$77.15	$9,258.00
Laborer	120.00	HR			$44.30	$5,316.00
Operator: Small Equipment	120.00	HR			$55.34	$6,640.80
Street Sweeping	168.00	HR			$140.00	$23,520.00
Dust Permit	2.00	EACH			$1,130.00	$2,260.00
On-site Trackout Rock	120.00	TON	72.00	0.60	$94.39	$11,327.28
Trackout Rock	120.00	TON			$33.70	$4,044.00
Setup & Remove Trackout (40.00 TON/DY, 3.00 DY)	120.00	TON	72.00	0.60	$60.69	$7,283.28
F-250 to F-450	24.00	HR			$39.86	$956.64
John Deere 210 Gannon / Skip Loader	24.00	HR			$86.82	$2,083.68
Foreman	24.00	HR			$77.15	$1,851.60
Laborer	24.00	HR			$44.30	$1,063.20
Operator: Small Equipment	24.00	HR			$55.34	$1,328.16
3 - Install Pipe Plug Per MAG Standard Detail 427	**8.00**	**EACH**	**576.00**	**72.00**	**$10,050.84**	**$80,406.72**
Install Pipe Plug	8.00	EACH	576.00	72.00	$9,175.84	$73,406.72
Large Diameter Pipe Plug Crew (1.00 EACH/DY, 8.00 DY)	8.00	EACH	576.00	72.00	$8,925.84	$71,406.72
F-250 to F-450	64.00	HR			$39.86	$2,551.04
Cat 950	64.00	HR			$104.46	$6,685.44
Excavator - 160 K LB	64.00	HR			$304.86	$19,511.04
Water Truck 4000Gal	64.00	HR			$75.36	$4,823.04
Backhoe Light	64.00	HR			$86.11	$5,511.04
Foreman	64.00	HR			$77.15	$4,937.60
Operator: Large Equipment [3]	64.00	HR			$60.68	$11,650.56
Pipelayer [2]	64.00	HR			$51.05	$6,534.40
Laborer [2]	64.00	HR			$44.30	$5,670.40
Water Truck Driver	64.00	HR			$55.19	$3,532.16
Cement - Concrete Mix 60# (Arizona Materials LLC)	160.00	UNIT			$8.00	$1,280.00
Concrete Block 8x8x16	288.00	UNIT			$2.50	$720.00
Shoring	14.00	DY			$500.00	$7,000.00
4 - Remove Existing 48" Sanitary Sewer As Needed For Construction Of New 66" (HOBAS) Pipe	**63.00**	**LF**	**264.00**	**4.19**	**$1,039.65**	**$65,497.64**
Dig, Remove Pipe & Backfill	63.00	LF	264.00	4.19	$982.50	$61,897.64
Large Diameter Removal Crew (21.00 LF/DY, 3.00 DY)	63.00	LF	264.00	4.19	$720.04	$45,362.64
F-250 to F-450	24.00	HR			$39.86	$956.64
Water Truck 4000Gal	24.00	HR			$75.36	$1,808.64
Cat 395 (Weight 190K)	24.00	HR			$398.75	$9,570.00
Excavator - 160 K LB	24.00	HR			$304.86	$7,316.64
Backhoe Light	24.00	HR			$86.11	$2,066.64
Hydraulic Hammer 10k FT LB	24.00	HR			$88.45	$2,122.80
Dump Truck - 10 Wheel [2]	24.00	HR			$88.40	$4,243.20
Cat 950	24.00	HR			$104.46	$2,507.04

Description	Quantity	UM	Man Hours	Man Hours per Unit	Unit Direct Cost	Total Direct Cost
(Item 4 - Remove Existing 48" Sanitary Sewer As Needed For Construction Of New 66" (HOBAS) Pipe						
Foreman	24.00	HR			$77.15	$1,851.60
Laborer [2]	24.00	HR			$44.30	$2,126.40
Operator: Large Equipment [3]	24.00	HR			$60.68	$4,368.96
Pipelayer [2]	24.00	HR			$51.05	$2,450.40
Truck Driver [2]	24.00	HR			$55.19	$2,649.12
Water Truck Driver	24.00	HR			$55.19	$1,324.56
DUMP FEES	27.00	LOAD			$75.00	$2,025.00
Dump Fee - Pipe Disposal	6.00	EACH			$100.00	$600.00
Trucking (1.00 DY, 8.25 Trucks, 4.13 EACH/HR)	33.00	EACH			$270.00	$8,910.00
Shoring	10.00	DY			$500.00	$5,000.00
Cut Pipe	2.00	EACH			$1,800.00	$3,600.00
5 - Grout Fill Existing 48" Sanitary Sewer To Extents Shown	**387.00**	**LF**	**288.00**	**0.74**	**$212.93**	**$82,403.56**
Grout Fill And Abandon Pipe	387.00	EACH	288.00	0.74	$200.01	$77,403.56
Large Diameter Abandonment Crew (96.75 EACH/DY, 4.00 DY)	387.00	EACH	288.00	0.74	$100.10	$38,738.56
F-250 to F-450	32.00	HR			$39.86	$1,275.52
Water Truck 4000Gal	32.00	HR			$75.36	$2,411.52
Cat 395 (Weight 190K)	32.00	HR			$218.28	$6,984.96
Cat 950	32.00	HR			$79.64	$2,548.48
Backhoe Light	32.00	HR			$86.11	$2,755.52
Grout Pump	32.00	HR			$206.25	$6,600.00
Foreman	32.00	HR			$77.15	$2,468.80
Operator: Large Equipment [3]	32.00	HR			$60.68	$5,825.28
Pipelayer [2]	32.00	HR			$51.05	$3,267.20
Laborer [2]	32.00	HR			$44.30	$2,835.20
Water Truck Driver	32.00	HR			$55.19	$1,766.08
Pumpable Grout Fill	209.00	UNIT			$185.00	$38,665.00
Shoring	10.00	DY			$500.00	$5,000.00
6 - Abandon Existing 108" Dia Manhole 756009379	**1.00**	**EACH**	**168.00**	**168.00**	**$27,020.66**	**$27,020.66**
Abandon Existing Manhole In Place	1.00	EACH	168.00	168.00	$21,803.76	$21,803.76
Structure Abandonment Crew (0.33 EACH/DY, 3.00 DY)	1.00	EACH	168.00	168.00	$21,803.76	$21,803.76
F-250 to F-450	24.00	HR			$39.86	$956.64
Backhoe Light	24.00	HR			$86.11	$2,066.64
Excavator - 160K LB	24.00	HR			$304.86	$7,316.64
Hydraulic Hammer 10k FT LB	24.00	HR			$88.45	$2,122.80
Foreman	24.00	HR			$77.15	$1,851.60
Operator: Large Equipment [2]	24.00	HR			$60.68	$2,912.64
Pipelayer [2]	24.00	HR			$51.05	$2,450.40
Laborer [2]	24.00	HR			$44.30	$2,126.40
1/2 Sack Slurry	50.40	CY			$103.51	$5,216.90
7 - Abandon Existing Junction Structure No. 2	**1.00**	**EACH**	**232.00**	**232.00**	**$65,995.34**	**$65,995.34**
Remove Lids, Concrete Rings, Riser, And Grout Fill	1.00	EACH	232.00	232.00	$33,563.12	$33,563.12
Demo, Grout Fill, Backfill & Restore Crew (0.25 EACH/DY, 4.00 DY)	1.00	EACH	232.00	232.00	$33,563.12	$33,563.12

Description	Quantity	UM	Man Hours	Man Hours per Unit	Unit Direct Cost	Total Direct Cost
(Item 7 - Abandon Existing Junction Structure No. 2 continued)						
F-250 to F-450	32.00	HR			$39.86	$1,275.52
Excavator - 160 K LB	32.00	HR			$304.86	$9,755.52
Cat 950	32.00	HR			$104.46	$3,342.72
Backhoe Light	32.00	HR			$86.11	$2,755.52
Dump Truck - 10 Wheel	8.00	HR			$88.40	$707.20
Hydraulic Hammer 10k FT LB	32.00	HR			$88.45	$2,830.40
Foreman	32.00	HR			$77.15	$2,468.80
Operator: Large Equipment [2]	32.00	HR			$60.68	$3,883.52
Pipelayer [2]	32.00	HR			$51.05	$3,267.20
Laborer [2]	32.00	HR			$44.30	$2,835.20
Truck Driver	8.00	HR			$55.19	$441.52
Trucking (2.00 DY, 0.13 Trucks, 0.06 EACH/HR)	1.00	EACH			$270.00	$270.00
DUMP FEES	1.00	LOAD			$100.00	$100.00
1/2 Sack Slurry	309.75	CY			$103.51	$32,062.22
8 - Furnish And Install 48" Sanitary Sewer (PVC SDR-26)	**203.00**	**LF**	**609.00**	**3.00**	**$1,377.18**	**$279,567.56**
48" Sewer Installation	203.00	LF	609.00	3.00	$728.36	$147,857.66
48" Mainline Sewer Crew (29.00 LF/DY, 7.00 DY)	203.00	LF	560.00	2.76	$461.11	$93,604.56
F-250 to F-450	56.00	HR			$39.86	$2,232.16
Dump Truck - 10 Wheel	56.00	HR			$88.40	$4,950.40
Water Truck 4000Gal	56.00	HR			$75.36	$4,220.16
Cat 395 (Weight 190K)	56.00	HR			$398.75	$22,330.00
Excavator - 160 K LB	56.00	HR			$304.86	$17,072.16
Cat 950	56.00	HR			$104.46	$5,849.76
Backhoe Light	56.00	HR			$86.11	$4,822.16
36" Compaction Wheel 320/325/335/349	56.00	HR			$13.44	$752.64
Foreman	56.00	HR			$77.15	$4,320.40
Operator: Large Equipment [3]	56.00	HR			$60.68	$10,194.24
Pipelayer [2]	56.00	HR			$51.05	$5,717.60
Laborer [2]	56.00	HR			$44.30	$4,961.60
Truck Driver	56.00	HR			$55.19	$3,090.64
Water Truck Driver	56.00	HR			$55.19	$3,090.64
Trucking (1.00 DY, 27.00 Trucks, 13.50 EACH/HR)	108.00	EACH			$270.00	$29,160.00
DUMP FEES	108.00	LOAD			$100.00	$10,800.00
Shoring	10.00	DY			$750.00	$7,500.00
Sewerline Testing	203.00	LF	49.00	0.24	$33.46	$6,793.10
Sewerline Testing Crew (203.00 LF/DY, 1.00 DY)	203.00	LF	40.00	0.20	$24.89	$5,053.60
42-78 Inch Plug [2]	8.00	HR			$19.88	$318.08
185 Compressor	8.00	HR			$51.69	$413.52
Backhoe Light	8.00	HR			$86.11	$688.88
24-inch Trailer Mounted Blower	8.00	HR			$51.25	$410.00
Confined Space Equipment	8.00	HR			$15.63	$125.04
Flatbed Trailers 12 to 18 Fort Trailer	8.00	HR			$12.75	$102.00
Vac Trailer 500 Gallon	8.00	HR			$56.36	$450.88
F-250 to F-450	8.00	HR			$39.86	$318.88

Description	Quantity	UM	Man Hours	Man Hours per Unit	Unit Direct Cost	Total Direct Cost
(Item 8 - Furnish And Install 48" Sanitary Sewer (PVC SDR-26) continued)						
Foreman	8.00	HR			$77.15	$617.20
Laborer [2]	8.00	HR			$44.30	$708.80
Leadman	8.00	HR			$51.86	$414.88
Operator: Large Equipment	8.00	HR			$60.68	$485.44
GC-Combo Hydro Truck Crew (812.00 LF/DY, 0.25 DY)	203.00	LF	4.00	0.02	$3.31	$671.12
Combo Vactor Truck	2.00	HR			$225.00	$450.00
Combo Truck Assistant	2.00	HR			$48.46	$96.92
Combo Truck Operator	2.00	HR			$62.10	$124.20
CCTV Inspection (4 Hour Minimum Or 1000 LF) (406.00 LF/DY, 0.50 DY)	203.00	LF	5.00	0.02	$5.26	$1,068.38
Camera Truck	4.00	HR			$165.00	$660.00
CCTV Technician	5.00	HR			$81.68	$408.38
Material Buy	1.00	EACH	0.00	0.00	$131,709.91	$131,709.91
1/2 Sack Slurry	190.28	CY			$103.51	$19,695.37
Aggregate - ABC MAG Spec	1,738.28	TON			$20.00	$34,765.50
Pipe - PVC SDR 26 Pipe 48in	224.00	LF			$344.68	$77,208.54
Detectable Tape	1.00	ROLL			$40.50	$40.50
9 - Remove Existing Plug And Connect To Existing 66" Stub Out	**1.00**	**EACH**	**60.00**	**60.00**	**$15,331.12**	**$15,331.12**
Expose Existing Pipe Stub And Remove Plug	1.00	EACH	60.00	60.00	$15,331.12	$15,331.12
66" Sewer Crew (2.00 EACH/DY, 0.50 DY)	1.00	EACH	44.00	44.00	$7,206.64	$7,206.64
F-250 to F-450	4.00	HR			$39.86	$159.44
Dump Truck - 10 Wheel [2]	4.00	HR			$88.40	$707.20
Water Truck 4000Gal	4.00	HR			$75.36	$301.44
Cat 395 (Weight 190K)	4.00	HR			$398.75	$1,595.00
Excavator - 160 K LB	4.00	HR			$304.86	$1,219.44
Cat 950	4.00	HR			$104.46	$417.84
Backhoe Light	4.00	HR			$86.11	$344.44
Foreman	4.00	HR			$77.15	$308.60
Operator: Large Equipment [3]	4.00	HR			$60.68	$728.16
Laborer [2]	4.00	HR			$44.30	$354.40
Pipelayer [2]	4.00	HR			$51.05	$408.40
Truck Driver [2]	4.00	HR			$55.19	$441.52
Water Truck Driver	4.00	HR			$55.19	$220.76
GC-Combo Hydro Truck Crew (1.00 EACH/DY, 1.00 DY)	1.00	EACH	16.00	16.00	$2,684.48	$2,684.48
Combo Vactor Truck	8.00	HR			$225.00	$1,800.00
Combo Truck Assistant	8.00	HR			$48.46	$387.68
Combo Truck Operator	8.00	HR			$62.10	$496.80
Trucking (1.00 DY, 3.00 Trucks, 1.50 EACH/HR)	12.00	EACH			$270.00	$3,240.00
DUMP FEES	12.00	LOAD			$100.00	$1,200.00
Shoring	2.00	DY			$500.00	$1,000.00
10 - Furnish & Install 66" Sanitary Sewer (Hobas FWC Coupling Joint)	**776.00**	**LF**	**3,840.89**	**4.95**	**$2,061.63**	**$1,599,824.82**
66" Sewerline Installation	776.00	LF	3,840.89	4.95	$1,277.02	$990,968.16
66" Sewer Crew (18.00 LF/DY, 43.11 DY)	776.00	LF	3,448.89	4.44	$782.18	$606,973.40
F-250 to F-450	344.89	HR			$39.86	$13,747.27

Description	Quantity	UM	Man Hours	Man Hours per Unit	Unit Direct Cost	Total Direct Cost
(Item 10 - Furnish & Install 66" Sanitary Sewer (Hobas FWC Coupling Joint) continued)						
Dump Truck - 10 Wheel [2]	344.89	HR			$88.40	$60,976.36
Water Truck 4000Gal	344.89	HR			$75.36	$25,990.83
Cat 395 (Weight 190K)	344.89	HR			$398.75	$137,524.44
Excavator - 160 K LB	344.89	HR			$304.86	$105,142.83
Cat 950	344.89	HR			$104.46	$36,027.09
Backhoe Light	344.89	HR			$86.11	$29,698.38
36" Compaction Wheel 320/325/335/349	344.89	HR			$13.44	$4,635.31
Foreman	344.89	HR			$77.15	$26,608.18
Operator: Large Equipment [3]	344.89	HR			$60.68	$62,783.57
Laborer [2]	344.89	HR			$44.30	$30,557.16
Pipelayer [2]	344.89	HR			$51.05	$35,213.16
Truck Driver	344.89	HR			$55.19	$19,034.42
Water Truck Driver	344.89	HR			$55.19	$19,034.42
Trucking (1.00 DY, 148.75 Trucks, 74.38 EACH/HR)	595.00	EACH			$270.00	$160,650.00
DUMP FEES	595.00	LOAD			$100.00	$59,500.00
Shoring	60.00	DY			$1,825.00	$109,500.00
Sewerline Testing	776.00	LF	392.00	0.51	$70.03	$54,344.76
Sewerline Testing Crew (97.00 LF/DY, 8.00 DY)	776.00	LF	320.00	0.41	$52.10	$40,428.80
42-78 Inch Plug [2]	64.00	HR			$19.88	$2,544.64
185 Compressor	64.00	HR			$51.69	$3,308.16
Backhoe Light	64.00	HR			$86.11	$5,511.04
24-inch Trailer Mounted Blower	64.00	HR			$51.25	$3,280.00
Confined Space Equipment	64.00	HR			$15.63	$1,000.32
Flatbed Trailers 12 to 18 Fort Trailer	64.00	HR			$12.75	$816.00
Vac Trailer 500 Gallon	64.00	HR			$56.36	$3,607.04
F-250 to F-450	64.00	HR			$39.86	$2,551.04
Foreman	64.00	HR			$77.15	$4,937.60
Laborer [2]	64.00	HR			$44.30	$5,670.40
Leadman	64.00	HR			$51.86	$3,319.04
Operator: Large Equipment	64.00	HR			$60.68	$3,883.52
GC-Combo Hydro Truck Crew (388.00 LF/DY, 2.00 DY)	776.00	LF	32.00	0.04	$6.92	$5,368.96
Combo Vactor Truck	16.00	HR			$225.00	$3,600.00
Combo Truck Assistant	16.00	HR			$48.46	$775.36
Combo Truck Operator	16.00	HR			$62.10	$993.60
CCTV Inspection (4 Hour Minimum Or 1000 LF) (194.00 LF/DY, 4.00 DY)	776.00	LF	40.00	0.05	$11.01	$8,547.00
Camera Truck	32.00	HR			$165.00	$5,280.00
CCTV Technician	40.00	HR			$81.68	$3,267.00
Material Buy	1.00	EACH	0.00	0.00	$608,856.66	$608,856.66
Aggregate - ABC MAG Spec	8,980.55	TON			$20.00	$179,611.00
1/2 Sack Slurry	1,467.38	CY			$103.51	$151,887.99
66" Hobas Pipe	840.00	LF			$330.00	$277,200.00
Detectable Tape	2.00	ROLL			$40.50	$81.00
Misc. - Tracer Wire	1.00	LF			$76.67	$76.67

Description	Quantity	UM	Man Hours	Man Hours per Unit	Unit Direct Cost	Total Direct Cost
11 - Remove Existing 66" Sanitary Sewer And Replace With 66" Hobas (FWC Coupling Joint Type)	**110.00**	**LF**	**1,673.00**	**15.21**	**$4,489.87**	**$493,885.30**
66" Sewerline Removal & Replacement	110.00	LF	1,624.00	14.76	$3,476.19	$382,380.73
66" Remove & Replace Sewer Crew (7.33 LF/DY, 15.00 DY)	110.00	LF	1,200.00	10.91	$2,016.39	$221,803.20
F-250 to F-450	120.00	HR			$39.86	$4,783.20
Dump Truck - 10 Wheel [2]	120.00	HR			$88.40	$21,216.00
Water Truck 4000Gal	120.00	HR			$75.36	$9,043.20
Cat 395 (Weight 190K)	120.00	HR			$398.75	$47,850.00
Excavator - 160 K LB	120.00	HR			$304.86	$36,583.20
Cat 950	120.00	HR			$104.46	$12,535.20
Backhoe Light	120.00	HR			$86.11	$10,333.20
Hydraulic Hammer 10k FT LB	120.00	HR			$88.45	$10,614.00
36" Compaction Wheel 320/325/335/349	120.00	HR			$13.44	$1,612.80
Foreman	120.00	HR			$77.15	$9,258.00
Operator: Large Equipment [3]	120.00	HR			$60.68	$21,844.80
Laborer [2]	120.00	HR			$44.30	$10,632.00
Pipelayer [2]	120.00	HR			$51.05	$12,252.00
Truck Driver	120.00	HR			$55.19	$6,622.80
Water Truck Driver	120.00	HR			$55.19	$6,622.80
Locate, Remove Existing Collar, And Tie-in (0.33 EACH/DY, 3.00 DY)	1.00	EACH	216.00	216.00	$40,691.28	$40,691.28
F-250 to F-450	24.00	HR			$39.86	$956.64
Dump Truck - 10 Wheel	24.00	HR			$88.40	$2,121.60
Water Truck 4000Gal	24.00	HR			$75.36	$1,808.64
Cat 395 (Weight 190K)	24.00	HR			$398.75	$9,570.00
Excavator - 160 K LB	24.00	HR			$304.86	$7,316.64
Cat 950	24.00	HR			$104.46	$2,507.04
Backhoe Light	24.00	HR			$86.11	$2,066.64
Hydraulic Hammer 10k FT LB	24.00	HR			$88.45	$2,122.80
Foreman	24.00	HR			$77.15	$1,851.60
Laborer [2]	24.00	HR			$44.30	$2,126.40
Operator: Large Equipment [3]	24.00	HR			$60.68	$4,368.96
Pipelayer	24.00	HR			$51.05	$1,225.20
Truck Driver	24.00	HR			$55.19	$1,324.56
Water Truck Driver	24.00	HR			$55.19	$1,324.56
Trucking (1.00 DY, 39.50 Trucks, 19.75 EACH/HR)	158.00	EACH			$270.00	$42,660.00
DUMP FEES	158.00	LOAD			$100.00	$15,800.00
Shoring	20.00	DY			$1,250.00	$25,000.00
Hydro Excavate Around Pipe	2.00	EACH	128.00	64.00	$10,737.92	$21,475.84
GC-Combo Hydro Truck Crew (0.25 EACH/DY, 8.00 DY)	2.00	EACH	128.00	64.00	$10,737.92	$21,475.84
Combo Vactor Truck	64.00	HR			$225.00	$14,400.00
Combo Truck Assistant	64.00	HR			$48.46	$3,101.44
Combo Truck Operator	64.00	HR			$62.10	$3,974.40
Install Pipe Collar	1.00	EACH	80.00	80.00	$11,350.41	$11,350.41
Install Pipe Collar 66" Pipe (0.50 EACH/DY, 2.00 DY)	1.00	EACH	80.00	80.00	$9,977.76	$9,977.76

Description	Quantity	UM	Man Hours	Man Hours per Unit	Unit Direct Cost	Total Direct Cost
(Item 11 - Remove Existing 66" Sanitary Sewer And Replace With 66" Hobas (FWC Coupling Joint Type) continued)						
F-250 to F-450	16.00	HR			$39.86	$637.76
Excavator - 160 K LB	16.00	HR			$304.86	$4,877.76
Foreman	16.00	HR			$77.15	$1,234.40
Pipelayer [2]	16.00	HR			$51.05	$1,633.60
Laborer	16.00	HR			$44.30	$708.80
Operator: Small Equipment	16.00	HR			$55.34	$885.44
Forms And Bar	1.00	EACH			$750.00	$750.00
Ready Mix Concrete - MAG C 2000	4.20	CY			$148.25	$622.65
Cut Pipe	2.00	EACH			$1,800.00	$3,600.00
Material Buy	1.00	EACH	0.00	0.00	$104,711.47	$104,711.47
Aggregate - ABC MAG Spec	1,651.20	TON			$20.00	$33,024.00
1/2 Sack Slurry	245.10	CY			$103.51	$25,370.30
66" Hobas Pipe	140.00	LF			$330.00	$46,200.00
Detectable Tape	1.00	ROLL			$40.50	$40.50
Misc. - Tracer Wire	1.00	LF			$76.67	$76.67
Sewerline Testing	110.00	LF	49.00	0.45	$61.76	$6,793.10
Sewerline Testing Crew (110.00 LF/DY, 1.00 DY)	110.00	LF	40.00	0.36	$45.94	$5,053.60
42-78 Inch Plug [2]	8.00	HR			$19.88	$318.08
185 Compressor	8.00	HR			$51.69	$413.52
Backhoe Light	8.00	HR			$86.11	$688.88
24-inch Trailer Mounted Blower	8.00	HR			$51.25	$410.00
Confined Space Equipment	8.00	HR			$15.63	$125.04
Flatbed Trailers 12 to 18 Fort Trailer	8.00	HR			$12.75	$102.00
Vac Trailer 500 Gallon	8.00	HR			$56.36	$450.88
F-250 to F-450	8.00	HR			$39.86	$318.88
Foreman	8.00	HR			$77.15	$617.20
Laborer [2]	8.00	HR			$44.30	$708.80
Leadman	8.00	HR			$51.86	$414.88
Operator: Large Equipment	8.00	HR			$60.68	$485.44
GC-Combo Hydro Truck Crew (440.00 LF/DY, 0.25 DY)	110.00	LF	4.00	0.04	$6.10	$671.12
Combo Vactor Truck	2.00	HR			$225.00	$450.00
Combo Truck Assistant	2.00	HR			$48.46	$96.92
Combo Truck Operator	2.00	HR			$62.10	$124.20
CCTV Inspection (4 Hour Minimum Or 1000 LF) (220.00 LF/DY, 0.50 DY)	110.00	LF	5.00	0.05	$9.71	$1,068.38
Camera Truck	4.00	HR			$165.00	$660.00
CCTV Technician	5.00	HR			$81.68	$408.38
12 - Furnish And Install 60" Polymer Concrete Sewer Manhole With 96" Precast Base	**3.00**	**EACH**	**1,056.00**	**352.00**	**$189,772.58**	**$569,317.75**
Install 60" Manhole	3.00	EACH	1,056.00	352.00	$180,272.58	$540,817.75
Excavate And Backfill Manhole	3.00	EACH	960.00	320.00	$86,202.06	$258,606.19
Manhole Crew (0.25 EACH/DY, 12.00 DY)	3.00	EACH	960.00	320.00	$53,058.24	$159,174.72
F-250 to F-450	96.00	HR			$39.86	$3,826.56
Dump Truck - 10 Wheel	96.00	HR			$88.40	$8,486.40
Water Truck 4000Gal	96.00	HR			$75.36	$7,234.56
Cat 395 (Weight 190K)	96.00	HR			$398.75	$38,280.00

Description	Quantity	UM	Man Hours	Man Hours per Unit	Unit Direct Cost	Total Direct Cost
(Item 12 - Furnish And Install 60" Polymer Concrete Sewer Manhole With 96" Precast Base continued)						
Excavator - 160 K LB	96.00	HR			$304.86	$29,266.56
Cat 950	96.00	HR			$104.46	$10,028.16
Backhoe Light	96.00	HR			$86.11	$8,266.56
Foreman	96.00	HR			$77.15	$7,406.40
Operator: Large Equipment [3]	96.00	HR			$60.68	$17,475.84
Pipelayer [2]	96.00	HR			$51.05	$9,801.60
Laborer [2]	96.00	HR			$44.30	$8,505.60
Truck Driver	96.00	HR			$55.19	$5,298.24
Water Truck Driver	96.00	HR			$55.19	$5,298.24
1/2 Sack Slurry	403.13	CY			$103.51	$41,727.47
Aggregate - ABC MAG Spec	56.70	TON			$20.00	$1,134.00
Trucking (1.00 DY, 11.50 Trucks, 5.75 EACH/HR)	46.00	EACH			$270.00	$12,420.00
DUMP FEES	46.00	LOAD			$75.00	$3,450.00
Shoring	22.00	DY			$1,850.00	$40,700.00
Testing Structure	3.00	EACH	48.00	16.00	$2,325.00	$6,975.00
Manhole Testing (2.00 EACH/DY, 1.50 DY)	3.00	EACH	48.00	16.00	$2,325.00	$6,975.00
F-250 to F-450	12.00	HR			$39.86	$478.32
42-78 Inch Plug [2]	12.00	HR			$19.88	$477.12
185 Compressor	12.00	HR			$51.69	$620.28
Backhoe Light	12.00	HR			$86.11	$1,033.32
24-inch Trailer Mounted Blower	12.00	HR			$51.25	$615.00
Confined Space Equipment	12.00	HR			$15.63	$187.56
Flatbed Trailers 12 to 18 Fort Trailer	12.00	HR			$12.75	$153.00
Vac Trailer 500 Gallon	12.00	HR			$56.36	$676.32
Foreman	12.00	HR			$77.15	$925.80
Pipelayer	12.00	HR			$51.05	$612.60
Laborer	12.00	HR			$44.30	$531.60
Operator: Small Equipment	12.00	HR			$55.34	$664.08
MH Adjustment	3.00	EACH	48.00	16.00	$1,745.52	$5,236.56
RH-Manhole Raised Crew (2.00 EACH/DY, 1.50 DY)	3.00	EACH	48.00	16.00	$1,460.60	$4,381.80
F-250 to F-450	12.00	HR			$39.86	$478.32
Backhoe Light	12.00	HR			$86.11	$1,033.32
Flatbed Trailers 12 to 18 Fort Trailer	12.00	HR			$12.75	$153.00
Foreman	12.00	HR			$77.15	$925.80
Laborer [2]	12.00	HR			$44.30	$1,063.20
Operator: Large Equipment	12.00	HR			$60.68	$728.16
CONCRETE - MAG AA (4000 PSI)	4.00	CY			$151.19	$604.76
Concrete - Short Load Fee	1.00	EACH			$250.00	$250.00
Buy Manholes	3.00	EACH	0.00	0.00	$90,000.00	$270,000.00
Manhole - Polymer Manhole - 60"	3.00	EACH			$90,000.00	$270,000.00
Crane For Manhole Installation	3.00	EACH			$9,500.00	$28,500.00
13 - Remove Existing Manhole 756004803 And Replace With 60" Polymer Concrete Sewer Manhole With 96" Precast Base (MH No. 4)	**1.00**	**EACH**	**896.00**	**896.00**	**$348,571.50**	**$348,571.50**
Install 60" Manhole	1.00	EACH	896.00	896.00	$339,071.50	$339,071.50
Hydro Excavate Around Pipe	1.00	EACH	64.00	64.00	$10,737.92	$10,737.92

Description	Quantity	UM	Man Hours	Man Hours per Unit	Unit Direct Cost	Total Direct Cost
(Item 13 - Remove Existing Manhole 756004803 And Replace With 60" Polymer Concrete Sewer Manhole With 96" Precast Base						
GC-Combo Hydro Truck Crew (0.25 EACH/DY, 4.00 DY)	1.00	EACH	64.00	64.00	$10,737.92	$10,737.92
Combo Vactor Truck	32.00	HR			$225.00	$7,200.00
Combo Truck Assistant	32.00	HR			$48.46	$1,550.72
Combo Truck Operator	32.00	HR			$62.10	$1,987.20
Cut Pipe	2.00	EACH			$1,800.00	$3,600.00
MH Adjustment	1.00	EACH	16.00	16.00	$2,095.60	$2,095.60
RH-Manhole Raised Crew (2.00 EACH/DY, 0.50 DY)	1.00	EACH	16.00	16.00	$1,460.60	$1,460.60
F-250 to F-450	4.00	HR			$39.86	$159.44
Backhoe Light	4.00	HR			$86.11	$344.44
Flatbed Trailers 12 to 18 Fort Trailer	4.00	HR			$12.75	$51.00
Foreman	4.00	HR			$77.15	$308.60
Laborer [2]	4.00	HR			$44.30	$354.40
Operator: Large Equipment	4.00	HR			$60.68	$242.72
CONCRETE - MAG AA (4000 PSI)	4.20	CY			$151.19	$635.00
Excavate And Backfill Manhole	1.00	EACH	720.00	720.00	$184,833.01	$184,833.01
SL-Manhole Coated 7ft Diameter Appurtenance Crew (0.10 EACH/DY, 10.00 DY)	1.00	EACH	720.00	720.00	$135,637.60	$135,637.60
F-250 to F-450	80.00	HR			$39.86	$3,188.80
Dump Truck - 10 Wheel	80.00	HR			$88.40	$7,072.00
Water Truck 4000Gal	80.00	HR			$75.36	$6,028.80
Cat 395 (Weight 190K)	80.00	HR			$398.75	$31,900.00
Excavator - 160 K LB	80.00	HR			$304.86	$24,388.80
Cat 950	80.00	HR			$104.46	$8,356.80
Backhoe Light	80.00	HR			$86.11	$6,888.80
Hydraulic Hammer 10k FT LB	80.00	HR			$88.45	$7,076.00
Foreman	80.00	HR			$77.15	$6,172.00
Laborer [2]	80.00	HR			$44.30	$7,088.00
Operator: Large Equipment [3]	80.00	HR			$60.68	$14,563.20
Pipelayer	80.00	HR			$51.05	$4,084.00
Truck Driver	80.00	HR			$55.19	$4,415.20
Water Truck Driver	80.00	HR			$55.19	$4,415.20
1/2 Sack Slurry	288.75	CY			$103.51	$29,888.51
Aggregate - ABC MAG Spec	23.10	TON			$20.00	$462.00
Trucking (1.00 DY, 8.75 Trucks, 4.38 EACH/HR)	35.00	EACH			$270.00	$9,450.00
Dump Fee - Concrete	4.00	LOAD			$195.00	$780.00
DUMP FEES	31.00	LOAD			$100.00	$3,100.00
Pipe - PVC SDR 26 Pipe 48in	16.00	LF			$344.68	$5,514.90
Testing Structure	1.00	EACH	16.00	16.00	$2,328.24	$2,328.24
Manhole Testing (2.00 EACH/DY, 0.50 DY)	1.00	EACH	16.00	16.00	$2,328.24	$2,328.24
F-250 to F-450	4.00	HR			$39.86	$159.44
42-78 Inch Plug [2]	4.00	HR			$19.88	$159.04
185 Compressor	4.00	HR			$51.69	$206.76
Backhoe Light	4.00	HR			$86.11	$344.44
24-inch Trailer Mounted Blower	4.00	HR			$51.25	$205.00
Confined Space Equipment	4.00	HR			$15.63	$62.52

Description	Quantity	UM	Man Hours	Man Hours per Unit	Unit Direct Cost	Total Direct Cost
(Item 13 - Remove Existing Manhole 756004803 And Replace With 60" Polymer Concrete Sewer Manhole With 96" Precast Base						
Flatbed Trailers 12 to 18 Fort Trailer	4.00	HR			$12.75	$51.00
Vac Trailer 500 Gallon	4.00	HR			$56.36	$225.44
Foreman	4.00	HR			$77.15	$308.60
Laborer	4.00	HR			$44.30	$177.20
Leadman	4.00	HR			$51.86	$207.44
Operator: Small Equipment	4.00	HR			$55.34	$221.36
Install Pipe Collar	1.00	EACH	80.00	80.00	$11,661.74	$11,661.74
Install Pipe Collar 66" Pipe (0.50 EACH/DY, 2.00 DY)	1.00	EACH	80.00	80.00	$9,977.76	$9,977.76
F-250 to F-450	16.00	HR			$39.86	$637.76
Excavator - 160 K LB	16.00	HR			$304.86	$4,877.76
Foreman	16.00	HR			$77.15	$1,234.40
Pipelayer [2]	16.00	HR			$51.05	$1,633.60
Laborer	16.00	HR			$44.30	$708.80
Operator: Small Equipment	16.00	HR			$55.34	$885.44
Forms And Bar	1.00	EACH			$750.00	$750.00
Ready Mix Concrete - MAG C 2000	6.30	CY			$148.25	$933.98
Buy Manholes	1.00	EACH	0.00	0.00	$96,065.00	$96,065.00
Manhole - Polymer Manhole - 60"	1.00	EACH			$96,065.00	$96,065.00
Shoring	15.00	DY			$1,850.00	$27,750.00
Crane For Manhole Installation	1.00	EACH			$9,500.00	$9,500.00
14 - Furnish & Install 66" Sanitary Sewer (Hobas Flush Reline Joint) Inside 86" Steel Casing	**639.00**	**LF**	**1,909.40**	**2.99**	**$5,973.99**	**$3,817,381.41**
Excavate Jack & Bore Pits And Set Shoring	2.00	EACH	1,008.00	504.00	$110,520.62	$221,041.24
J&B Excavation Crew (0.14 EACH/DY, 14.00 DY)	2.00	EACH	1,008.00	504.00	$89,993.12	$179,986.24
F-250 to F-450	112.00	HR			$39.86	$4,464.32
Backhoe Light	112.00	HR			$86.11	$9,644.32
Cat 395 (Weight 190K)	112.00	HR			$398.75	$44,660.00
Cat 950	112.00	HR			$104.46	$11,699.52
Dump Truck - 10 Wheel	112.00	HR			$88.40	$9,900.80
Excavator - 160 K LB	112.00	HR			$304.86	$34,144.32
Water Truck 4000Gal	112.00	HR			$75.36	$8,440.32
Foreman	112.00	HR			$77.15	$8,640.80
Laborer [2]	112.00	HR			$44.30	$9,923.20
Operator: Large Equipment [3]	112.00	HR			$60.68	$20,388.48
Pipelayer	112.00	HR			$51.05	$5,717.60
Truck Driver	112.00	HR			$55.19	$6,181.28
Water Truck Driver	112.00	HR			$55.19	$6,181.28
Trucking (1.00 DY, 29.75 Trucks, 14.88 EACH/HR)	119.00	EACH			$270.00	$32,130.00
DUMP FEES	119.00	LOAD			$75.00	$8,925.00
Backfill Jack & Bore Pits And Set Shoring	2.00	EACH	616.00	308.00	$85,310.23	$170,620.46
J&B Backfill Crew (0.29 EACH/DY, 7.00 DY)	2.00	EACH	616.00	308.00	$53,037.60	$106,075.20
Backhoe Light	56.00	HR			$86.11	$4,822.16
Cat 395 (Weight 190K)	56.00	HR			$398.75	$22,330.00
Cat 950	56.00	HR			$104.46	$5,849.76
Dump Truck - 10 Wheel [3]	56.00	HR			$88.40	$14,851.20

Description	Quantity	UM	Man Hours	Man Hours per Unit	Unit Direct Cost	Total Direct Cost
(Item 14 - Furnish & Install 66" Sanitary Sewer (Hobas Flush Reline Joint) Inside 86" Steel Casing continued)						
Excavator - 160 K LB	56.00	HR			$304.86	$17,072.16
F-250 to F-450	56.00	HR			$39.86	$2,232.16
Water Truck 4000Gal	56.00	HR			$75.36	$4,220.16
Foreman	56.00	HR			$77.15	$4,320.40
Laborer [2]	56.00	HR			$44.30	$4,961.60
Operator: Large Equipment [3]	56.00	HR			$60.68	$10,194.24
Pipelayer	56.00	HR			$51.05	$2,858.80
Truck Driver [3]	56.00	HR			$55.19	$9,271.92
Water Truck Driver	56.00	HR			$55.19	$3,090.64
Aggregate - ABC MAG Spec	1,227.45	TON			$20.00	$24,549.00
1/2 Sack Slurry	386.40	CY			$103.51	$39,996.26
J&B Casing Installation	639.00	LF	256.40	0.40	$4,931.21	$3,151,043.27
J&B Sub Furnish & Install Casing (W/ 1.5% Bond)	639.00	LF			$4,308.68	$2,753,246.52
Trucking (13.75 DY, 2.00 Trucks, 1.00 EACH/HR)	110.00	EACH			$270.00	$29,700.00
DUMP FEES	110.00	LOAD			$75.00	$8,250.00
J&B Support Crew & Spoil Haul - Off (9.97 LF/DY, 64.10 DY)	639.00	LF	256.40	0.40	$167.55	$107,066.75
Cat 950	512.80	HR			$104.46	$53,567.35
Water Truck 4000Gal	512.80	HR			$75.36	$38,644.80
Operator: Large Equipment [0.25]	512.80	HR			$60.68	$7,779.21
Water Truck Driver [0.25]	512.80	HR			$55.19	$7,075.39
66" Hobas Pipe Flush Reline	660.00	LF			$383.00	$252,780.00
Temp Fence Around Pits	7.00	MO			$350.00	$2,450.00
Shoring	7.00	MO			$38,280.02	$267,960.14
Sewerline Testing	639.00	LF	29.00	0.05	$6.68	$4,266.30
Sewerline Testing Crew (1,278.00 LF/DY, 0.50 DY)	639.00	LF	20.00	0.03	$3.95	$2,526.80
42-78 Inch Plug [2]	4.00	HR			$19.88	$159.04
185 Compressor	4.00	HR			$51.69	$206.76
Backhoe Light	4.00	HR			$86.11	$344.44
24-inch Trailer Mounted Blower	4.00	HR			$51.25	$205.00
Confined Space Equipment	4.00	HR			$15.63	$62.52
Flatbed Trailers 12 to 18 Fort Trailer	4.00	HR			$12.75	$51.00
Vac Trailer 500 Gallon	4.00	HR			$56.36	$225.44
F-250 to F-450	4.00	HR			$39.86	$159.44
Foreman	4.00	HR			$77.15	$308.60
Laborer [2]	4.00	HR			$44.30	$354.40
Leadman	4.00	HR			$51.86	$207.44
Operator: Large Equipment	4.00	HR			$60.68	$242.72
GC-Combo Hydro Truck Crew (2,556.00 LF/DY, 0.25 DY)	639.00	LF	4.00	0.01	$1.05	$671.12
Combo Vactor Truck	2.00	HR			$225.00	$450.00
Combo Truck Assistant	2.00	HR			$48.46	$96.92
Combo Truck Operator	2.00	HR			$62.10	$124.20
CCTV Inspection (4 Hour Minimum Or 1000 LF) (1,278.00 LF/DY, 0.50 DY)	639.00	LF	5.00	0.01	$1.67	$1,068.38
Camera Truck	4.00	HR			$165.00	$660.00
CCTV Technician	5.00	HR			$81.68	$408.38

Description	Quantity	UM	Man Hours	Man Hours per Unit	Unit Direct Cost	Total Direct Cost
15 - Remove Existing 48" Sanitary Sewer Prior To Steel Casing	**2.00**	**EACH**	**512.00**	**256.00**	**$83,716.80**	**$167,433.60**
Remove Existing 48" Sewer & Backfill	2.00	EACH	512.00	256.00	$83,716.80	$167,433.60
Sewer Removal Crew (0.25 EACH/DY, 8.00 DY)	2.00	EACH	512.00	256.00	$39,553.28	$79,106.56
F-250 to F-450	64.00	HR			$39.86	$2,551.04
Backhoe Light	64.00	HR			$86.11	$5,511.04
Cat 950	64.00	HR			$104.46	$6,685.44
Dump Truck - 10 Wheel	64.00	HR			$88.40	$5,657.60
Excavator - 160 K LB	64.00	HR			$304.86	$19,511.04
Hydraulic Hammer 10k FT LB	64.00	HR			$88.45	$5,660.80
Water Truck 4000Gal	64.00	HR			$75.36	$4,823.04
Foreman	64.00	HR			$77.15	$4,937.60
Laborer [2]	64.00	HR			$44.30	$5,670.40
Operator: Large Equipment [2]	64.00	HR			$60.68	$7,767.04
Pipelayer	64.00	HR			$51.05	$3,267.20
Truck Driver	64.00	HR			$55.19	$3,532.16
Water Truck Driver	64.00	HR			$55.19	$3,532.16
Trucking (1.00 DY, 10.00 Trucks, 5.00 EACH/HR)	40.00	EACH			$270.00	$10,800.00
DUMP FEES	40.00	LOAD			$75.00	$3,000.00
Shoring For Sta. 107+96	6.00	DY			$500.00	$3,000.00
Slide Rail For Sta. 108+65 (Pipe Is 5' From ADOT Canal)	2.00	WK			$14,936.87	$29,873.74
Cut Pipe	4.00	EACH			$1,800.00	$7,200.00
1/2 Sack Slurry	332.85	CY			$103.51	$34,453.30
16 - Furnish & Install New Junction Structure B	**1.00**	**EACH**	**4,304.00**	**4,304.00**	**$3,098,028.38**	**$3,098,028.38**
Excavate Pit, Set Slide Rail/Shoring, & Prep Subgrade	1.00	EACH	2,400.00	2,400.00	$513,495.57	$513,495.57
Excavation (0.04 EACH/DY, 25.00 DY)	1.00	EACH	2,200.00	2,200.00	$360,332.00	$360,332.00
F-250 to F-450	200.00	HR			$39.86	$7,972.00
Foreman	200.00	HR			$77.15	$15,430.00
Laborer [2]	200.00	HR			$44.30	$17,720.00
Pipelayer [2]	200.00	HR			$51.05	$20,420.00
Water Truck Driver	200.00	HR			$55.19	$11,038.00
Dump Truck - 10 Wheel [2]	200.00	HR			$88.40	$35,360.00
Water Truck 4000Gal	200.00	HR			$75.36	$15,072.00
Cat 395 (Weight 190K)	200.00	HR			$398.75	$79,750.00
Excavator - 160 K LB	200.00	HR			$304.86	$60,972.00
Cat 950	200.00	HR			$104.46	$20,892.00
Backhoe Light	200.00	HR			$86.11	$17,222.00
Operator: Large Equipment [3]	200.00	HR			$60.68	$36,408.00
Truck Driver [2]	200.00	HR			$55.19	$22,076.00
Structure Subgrade Prep Crew (441.80 SF/DY, 5.00 DY)	2,209.00	SF	200.00	0.09	$9.08	$20,048.00
F-250 to F-450	40.00	HR			$39.86	$1,594.40
Water Truck 4000Gal	40.00	HR			$75.36	$3,014.40
Cat 239 Skid Steer	40.00	HR			$71.84	$2,873.60
Trench Compactor Remote Control	40.00	HR			$31.11	$1,244.40
Foreman	40.00	HR			$77.15	$3,086.00

Description	Quantity	UM	Man Hours	Man Hours per Unit	Unit Direct Cost	Total Direct Cost
(Item 16 - Furnish & Install New Junction Structure B continued)						
Laborer	40.00	HR			$44.30	$1,772.00
Operator: Small Equipment	40.00	HR			$55.34	$2,213.60
Pipelayer	40.00	HR			$51.05	$2,042.00
Water Truck Driver	40.00	HR			$55.19	$2,207.60
Trucking (1.00 DY, 66.25 Trucks, 33.13 EACH/HR)	265.00	EACH			$270.00	$71,550.00
DUMP FEES	265.00	LOAD			$100.00	$26,500.00
Aggregate - ABC MAG Spec	242.55	TON			$20.00	$4,851.00
1/2 Sack Slurry	291.90	CY			$103.51	$30,214.57
Soft Dig Corners / Pipe	15.00	DY	240.00	16.00	$2,684.48	$40,267.20
GC-Combo Hydro Truck Crew (1.00 DY/DY, 15.00 DY)	15.00	DY	240.00	16.00	$2,684.48	$40,267.20
Combo Vactor Truck	120.00	HR			$225.00	$27,000.00
Combo Truck Assistant	120.00	HR			$48.46	$5,815.20
Combo Truck Operator	120.00	HR			$62.10	$7,452.00
Remove Slide Rail & Backfill	1.00	EACH	576.00	576.00	$213,795.55	$213,795.55
Remove Slide Rail & Backfill Crew (0.13 EACH/DY, 8.00 DY)	1.00	EACH	576.00	576.00	$91,415.68	$91,415.68
Cat 395 (Weight 190K)	64.00	HR			$398.75	$25,520.00
Cat 950	64.00	HR			$104.46	$6,685.44
Excavator - 160 K LB	64.00	HR			$304.86	$19,511.04
F-250 to F-450	64.00	HR			$39.86	$2,551.04
Water Truck 4000Gal	64.00	HR			$75.36	$4,823.04
Foreman	64.00	HR			$77.15	$4,937.60
Laborer [2]	64.00	HR			$44.30	$5,670.40
Operator: Large Equipment [3]	64.00	HR			$60.68	$11,650.56
Pipelayer [2]	64.00	HR			$51.05	$6,534.40
Water Truck Driver	64.00	HR			$55.19	$3,532.16
1/2 Sack Slurry	1,182.30	CY			$103.51	$122,379.87
Slide Rail Shoring	8.00	MO			$67,054.72	$536,437.76
Crane For Slide Rail Installation & Remove	5.00	DY			$9,500.00	$47,500.00
PVC T-Lock Installation (Sonco) (Sonco Construction, Inc.)	1.00	LS			$223,760.00	$223,760.00
CIP Structure B Subcontractor (CS Construction Inc)	1.00	LS			$931,382.40	$931,382.40
CIP Structure Material Buy	1.00	EACH	0.00	0.00	$478,157.74	$478,157.74
Stop Logs	1.00	LS			$270,034.00	$270,034.00
Davit Crane	1.00	LS			$10,258.50	$10,258.50
Access Hatch	1.00	LS			$41,305.95	$41,305.95
FRP Grating	1.00	LS			$148,343.72	$148,343.72
Misc Hardware, Anchors, Kor-N-Seal Boots, Braided Rope, Signs, Etc.	1.00	LS			$8,215.57	$8,215.57
Structure Leak Test	1.00	LS	320.00	320.00	$49,680.80	$49,680.80
Manhole Testing (0.10 EACH/DY, 10.00 DY)	1.00	EACH	320.00	320.00	$49,680.80	$49,680.80
F-250 to F-450	80.00	HR			$39.86	$3,188.80
42-78 Inch Plug [4]	80.00	HR			$19.88	$6,361.60
185 Compressor	80.00	HR			$51.69	$4,135.20
Backhoe Light	80.00	HR			$86.11	$6,888.80

Description	Quantity	UM	Man Hours	Man Hours per Unit	Unit Direct Cost	Total Direct Cost
(Item 16 - Furnish & Install New Junction Structure B continued)						
24-inch Trailer Mounted Blower	80.00	HR			$51.25	$4,100.00
Confined Space Equipment	80.00	HR			$15.63	$1,250.40
Flatbed Trailers 12 to 18 Fort Trailer	80.00	HR			$12.75	$1,020.00
Vac Trailer 500 Gallon	80.00	HR			$56.36	$4,508.80
Foreman	80.00	HR			$77.15	$6,172.00
Pipelayer	80.00	HR			$51.05	$4,084.00
Laborer	80.00	HR			$44.30	$3,544.00
Operator: Small Equipment	80.00	HR			$55.34	$4,427.20
Install Grating	1.00	EACH	480.00	480.00	$37,969.60	$37,969.60
Structure Assembly Crew (0.10 EACH/DY, 10.00 DY)	1.00	EACH	480.00	480.00	$37,969.60	$37,969.60
Backhoe Light	80.00	HR			$86.11	$6,888.80
F-250 to F-450	80.00	HR			$39.86	$3,188.80
Confined Space Equipment	80.00	HR			$15.63	$1,250.40
Foreman	80.00	HR			$77.15	$6,172.00
Laborer	80.00	HR			$44.30	$3,544.00
Operator: Small Equipment	80.00	HR			$55.34	$4,427.20
Pipelayer	80.00	HR			$51.05	$4,084.00
Concrete Finisher [2]	80.00	HR			$52.59	$8,414.40
Install Stop Logs	3.00	EACH	288.00	96.00	$7,593.92	$22,781.76
Structure Assembly Crew (0.50 EACH/DY, 6.00 DY)	3.00	EACH	288.00	96.00	$7,593.92	$22,781.76
Backhoe Light	48.00	HR			$86.11	$4,133.28
F-250 to F-450	48.00	HR			$39.86	$1,913.28
Confined Space Equipment	48.00	HR			$15.63	$750.24
Foreman	48.00	HR			$77.15	$3,703.20
Laborer	48.00	HR			$44.30	$2,126.40
Operator: Small Equipment	48.00	HR			$55.34	$2,656.32
Pipelayer	48.00	HR			$51.05	$2,450.40
Concrete Finisher [2]	48.00	HR			$52.59	$5,048.64
Temp Fence Around Pits	8.00	MO			$350.00	$2,800.00
17 - Furnish & Install New Junction Structure C	**1.00**	**EACH**	**1,792.00**	**1,792.00**	**$1,263,349.01**	**$1,263,349.01**
Excavate/Set Slide Rail And Remove Slide Rail/Backfill Of Structure	1.00	EACH	1,200.00	1,200.00	$253,237.48	$253,237.48
Structure Excavation & Backfill Crew (0.07 EACH/DY, 15.00 DY)	1.00	EACH	1,200.00	1,200.00	$198,968.40	$198,968.40
Backhoe Light	120.00	HR			$86.11	$10,333.20
Cat 395 (Weight 190K)	120.00	HR			$398.75	$47,850.00
Cat 950	120.00	HR			$104.46	$12,535.20
Dump Truck - 10 Wheel	120.00	HR			$88.40	$10,608.00
Excavator - 160 K LB	120.00	HR			$304.86	$36,583.20
F-250 to F-450	120.00	HR			$39.86	$4,783.20
Water Truck 4000Gal	120.00	HR			$75.36	$9,043.20
Foreman	120.00	HR			$77.15	$9,258.00
Laborer [2]	120.00	HR			$44.30	$10,632.00
Operator: Large Equipment [3]	120.00	HR			$60.68	$21,844.80
Pipelayer [2]	120.00	HR			$51.05	$12,252.00

Description	Quantity	UM	Man Hours	Man Hours per Unit	Unit Direct Cost	Total Direct Cost
(Item 17 - Furnish & Install New Junction Structure C continued)						
Truck Driver	120.00	HR			$55.19	$6,622.80
Water Truck Driver	120.00	HR			$55.19	$6,622.80
1/2 Sack Slurry	320.25	CY			$103.51	$33,149.08
Aggregate - ABC MAG Spec	38.50	TON			$20.00	$770.00
DUMP FEES	55.00	LOAD			$100.00	$5,500.00
Trucking (6.25 DY, 2.20 Trucks, 1.10 EACH/HR)	55.00	EACH			$270.00	$14,850.00
Soft Dig Corners / Pipe	10.00	DY	160.00	16.00	$2,684.48	$26,844.80
GC-Combo Hydro Truck Crew (1.00 DY/DY, 10.00 DY)	10.00	DY	160.00	16.00	$2,684.48	$26,844.80
Combo Vactor Truck	80.00	HR			$225.00	$18,000.00
Combo Truck Assistant	80.00	HR			$48.46	$3,876.80
Combo Truck Operator	80.00	HR			$62.10	$4,968.00
Crane For Structure Installation	1.00	EACH			$25,938.00	$25,938.00
Crane For Slide Rail Installation & Remove	2.00	EACH			$9,500.00	$19,000.00
Testing Structure	1.00	EACH	80.00	80.00	$12,475.28	$12,475.28
Manhole Testing (0.50 EACH/DY, 2.00 DY)	1.00	EACH	80.00	80.00	$10,425.28	$10,425.28
F-250 to F-450	16.00	HR			$39.86	$637.76
42-78 Inch Plug [3]	16.00	HR			$19.88	$954.24
185 Compressor	16.00	HR			$51.69	$827.04
Backhoe Light	16.00	HR			$86.11	$1,377.76
24-inch Trailer Mounted Blower	16.00	HR			$51.25	$820.00
Confined Space Equipment	16.00	HR			$15.63	$250.08
Flatbed Trailers 12 to 18 Fort Trailer	16.00	HR			$12.75	$204.00
Vac Trailer 500 Gallon	16.00	HR			$56.36	$901.76
Foreman	16.00	HR			$77.15	$1,234.40
Operator: Large Equipment	16.00	HR			$60.68	$970.88
Laborer [2]	16.00	HR			$44.30	$1,417.60
Leadman	16.00	HR			$51.86	$829.76
Grout Exterior Joint	100.00	EACH			$20.50	$2,050.00
Material Buy	1.00	EACH	0.00	0.00	$830,218.21	$830,218.21
Junction Structure C	1.00	EACH			$561,245.00	$561,245.00
Stop Logs	1.00	LS			$186,689.00	$186,689.00
Access Hatch	1.00	LS			$31,027.00	$31,027.00
Davit Crane	1.00	LS			$10,258.50	$10,258.50
FRP Grating	1.00	LS			$32,783.14	$32,783.14
Misc Hardware, Anchors, Kor-N-Seal Boots, Braided Rope, Signs, Etc.	1.00	LS			$8,215.57	$8,215.57
Slide Rail Shoring System	3.00	MO			$21,540.00	$64,620.00
Install Grating	1.00	EACH	160.00	160.00	$14,777.40	$14,777.40
CP-Concrete Replace Crew (0.20 EACH/DY, 5.00 DY)	1.00	EACH	160.00	160.00	$14,777.40	$14,777.40
Backhoe Light	40.00	HR			$86.11	$3,444.40
F-250 to F-450	40.00	HR			$39.86	$1,594.40
Confined Space Equipment	5.00	DY			$125.00	$625.00
Foreman	40.00	HR			$77.15	$3,086.00
Laborer	40.00	HR			$44.30	$1,772.00
Operator: Small Equipment	40.00	HR			$55.34	$2,213.60

Description	Quantity	UM	Man Hours	Man Hours per Unit	Unit Direct Cost	Total Direct Cost
(Item 17 - Furnish & Install New Junction Structure C continued)						
Pipelayer	40.00	HR			$51.05	$2,042.00
Install Stop Logs	2.00	EACH	192.00	96.00	$7,593.92	$15,187.84
Structure Assembly Crew (0.50 EACH/DY, 4.00 DY)	2.00	EACH	192.00	96.00	$7,593.92	$15,187.84
Backhoe Light	32.00	HR			$86.11	$2,755.52
F-250 to F-450	32.00	HR			$39.86	$1,275.52
Confined Space Equipment	32.00	HR			$15.63	$500.16
Foreman	32.00	HR			$77.15	$2,468.80
Laborer	32.00	HR			$44.30	$1,417.60
Operator: Small Equipment	32.00	HR			$55.34	$1,770.88
Pipelayer	32.00	HR			$51.05	$1,633.60
Concrete Finisher [2]	32.00	HR			$52.59	$3,365.76
Temp Fence Around Pits	3.00	MO			$350.00	$1,050.00
18 - Furnish & Install Junction Structure D (60" Polymer Concrete Manhole With 84" Base)	**1.00**	**EACH**	**888.00**	**888.00**	**$313,292.32**	**$313,292.32**
Install 60" Manhole On 84" Precast Base	1.00	EACH	888.00	888.00	$303,792.32	$303,792.32
Excavate And Backfill Manhole	1.00	EACH	720.00	720.00	$183,585.21	$183,585.21
Structure Excavation & Backfill Crew (0.10 EACH/DY, 10.00 DY)	1.00	EACH	720.00	720.00	$135,637.60	$135,637.60
F-250 to F-450	80.00	HR			$39.86	$3,188.80
Dump Truck - 10 Wheel	80.00	HR			$88.40	$7,072.00
Water Truck 4000Gal	80.00	HR			$75.36	$6,028.80
Cat 395 (Weight 190K)	80.00	HR			$398.75	$31,900.00
Excavator - 160 K LB	80.00	HR			$304.86	$24,388.80
Cat 950	80.00	HR			$104.46	$8,356.80
Backhoe Light	80.00	HR			$86.11	$6,888.80
Hydraulic Hammer 10k FT LB	80.00	HR			$88.45	$7,076.00
Foreman	80.00	HR			$77.15	$6,172.00
Operator: Large Equipment [3]	80.00	HR			$60.68	$14,563.20
Pipelayer	80.00	HR			$51.05	$4,084.00
Laborer [2]	80.00	HR			$44.30	$7,088.00
Truck Driver	80.00	HR			$55.19	$4,415.20
Water Truck Driver	80.00	HR			$55.19	$4,415.20
1/2 Sack Slurry	281.40	CY			$103.51	$29,127.71
Aggregate - ABC MAG Spec	22.00	TON			$20.00	$440.00
Trucking (1.00 DY, 9.25 Trucks, 4.63 EACH/HR)	37.00	EACH			$270.00	$9,990.00
Dump Fee - Concrete	4.00	UNIT			$100.00	$400.00
DUMP FEES	33.00	LOAD			$75.00	$2,475.00
Pipe - PVC SDR 26 Pipe 48in	16.00	LF			$344.68	$5,514.90
Cut Pipe	2.00	EACH			$1,800.00	$3,600.00
MH Adjustment	1.00	EACH	16.00	16.00	$1,778.10	$1,778.10
RH-Manhole Raised Crew (2.00 EACH/DY, 0.50 DY)	1.00	EACH	16.00	16.00	$1,460.60	$1,460.60
F-250 to F-450	4.00	HR			$39.86	$159.44
Backhoe Light	4.00	HR			$86.11	$344.44
Flatbed Trailers 12 to 18 Fort Trailer	4.00	HR			$12.75	$51.00
Foreman	4.00	HR			$77.15	$308.60
Laborer [2]	4.00	HR			$44.30	$354.40

Description	Quantity	UM	Man Hours	Man Hours per Unit	Unit Direct Cost	Total Direct Cost
(Item 18 - Furnish & Install Junction Structure D (60" Polymer Concrete Manhole With 84" Base) continued)						
Operator: Large Equipment	4.00	HR			$60.68	$242.72
CONCRETE - MAG AA (4000 PSI)	2.10	CY			$151.19	$317.50
Testing Structure	1.00	EACH	32.00	32.00	$4,118.40	$4,118.40
Manhole Testing (1.00 EACH/DY, 1.00 DY)	1.00	EACH	32.00	32.00	$4,118.40	$4,118.40
F-250 to F-450	8.00	HR			$39.86	$318.88
42-78 Inch Plug [2]	8.00	HR			$19.88	$318.08
185 Compressor	8.00	HR			$29.85	$238.80
Backhoe Light	8.00	HR			$40.69	$325.52
24-inch Trailer Mounted Blower	8.00	HR			$51.25	$410.00
Confined Space Equipment	8.00	HR			$15.63	$125.04
Flatbed Trailers 12 to 18 Fort Trailer	8.00	HR			$12.75	$102.00
Vac Trailer 500 Gallon	8.00	HR			$56.36	$450.88
Foreman	8.00	HR			$77.15	$617.20
Laborer	8.00	HR			$44.30	$354.40
Leadman	8.00	HR			$51.86	$414.88
Operator: Small Equipment	8.00	HR			$55.34	$442.72
Install Pipe Collar	1.00	EACH	120.00	120.00	$31,650.62	$31,650.62
Install Pipe Collar 66" Pipe (0.33 EACH/DY, 3.00 DY)	1.00	EACH	120.00	120.00	$14,966.64	$14,966.64
F-250 to F-450	24.00	HR			$39.86	$956.64
Excavator - 160 K LB	24.00	HR			$304.86	$7,316.64
Foreman	24.00	HR			$77.15	$1,851.60
Pipelayer [2]	24.00	HR			$51.05	$2,450.40
Laborer	24.00	HR			$44.30	$1,063.20
Operator: Small Equipment	24.00	HR			$55.34	$1,328.16
Forms And Bar	1.00	EACH			$750.00	$750.00
Ready Mix Concrete - MAG C 2000	6.30	CY			$148.25	$933.98
FRP End Treatment	1.00	EACH			$15,000.00	$15,000.00
Buy Manholes	1.00	EACH	0.00	0.00	$53,160.00	$53,160.00
Manhole - Polymer Manhole - 60"	1.00	EACH			$53,160.00	$53,160.00
Shoring	14.00	DY			$1,850.00	$25,900.00
Crane For Manhole Installation	1.00	EACH			$9,500.00	$9,500.00
19 - Furnish & Install New Junction Structure E	**1.00**	**EACH**	**2,380.00**	**2,380.00**	**$1,176,438.77**	**$1,176,438.77**
Excavate/Set Slide Rail And Remove Slide Rail/Backfill Of Structure	1.00	EACH	2,000.00	2,000.00	$408,466.27	$408,466.27
Structure Excavation & Backfill Crew (0.04 EACH/DY, 25.00 DY)	1.00	EACH	2,000.00	2,000.00	$349,304.00	$349,304.00
Backhoe Light	200.00	HR			$86.11	$17,222.00
Cat 395 (Weight 190K)	200.00	HR			$398.75	$79,750.00
Cat 950	200.00	HR			$104.46	$20,892.00
Dump Truck - 10 Wheel	200.00	HR			$88.40	$17,680.00
Excavator - 160 K LB	200.00	HR			$304.86	$60,972.00
F-250 to F-450	200.00	HR			$39.86	$7,972.00
Hydraulic Hammer 10k FT LB	200.00	HR			$88.45	$17,690.00
Water Truck 4000Gal	200.00	HR			$75.36	$15,072.00
Foreman	200.00	HR			$77.15	$15,430.00
Laborer [2]	200.00	HR			$44.30	$17,720.00

Description	Quantity	UM	Man Hours	Man Hours per Unit	Unit Direct Cost	Total Direct Cost
(Item 19 - Furnish & Install New Junction Structure E continued)						
Operator: Large Equipment [3]	200.00	HR			$60.68	$36,408.00
Pipelayer [2]	200.00	HR			$51.05	$20,420.00
Truck Driver	200.00	HR			$55.19	$11,038.00
Water Truck Driver	200.00	HR			$55.19	$11,038.00
1/2 Sack Slurry	349.65	CY			$103.51	$36,192.27
Aggregate - ABC MAG Spec	38.50	TON			$20.00	$770.00
DUMP FEES	60.00	LOAD			$100.00	$6,000.00
Trucking (6.25 DY, 2.40 Trucks, 1.20 EACH/HR)	60.00	EACH			$270.00	$16,200.00
Soft Dig Corners / Pipe	10.00	DY	160.00	16.00	$2,684.48	$26,844.80
GC-Combo Hydro Truck Crew (1.00 DY/DY, 10.00 DY)	10.00	DY	160.00	16.00	$2,684.48	$26,844.80
Combo Truck Assistant	80.00	HR			$48.46	$3,876.80
Combo Truck Operator	80.00	HR			$62.10	$4,968.00
Combo Vactor Truck	80.00	HR			$225.00	$18,000.00
Saw Cut Pipe	2.00	EACH			$1,500.00	$3,000.00
Crane For Structure Installation	1.00	EACH			$25,938.00	$25,938.00
Crane For Slide Rail Installation & Remove	2.00	DY			$9,500.00	$19,000.00
Testing Structure	1.00	EACH	60.00	60.00	$9,868.96	$9,868.96
Manhole Testing (0.67 EACH/DY, 1.50 DY)	1.00	EACH	60.00	60.00	$7,818.96	$7,818.96
F-250 to F-450	12.00	HR			$39.86	$478.32
42-78 Inch Plug [3]	12.00	HR			$19.88	$715.68
185 Compressor	12.00	HR			$51.69	$620.28
Backhoe Light	12.00	HR			$86.11	$1,033.32
24-inch Trailer Mounted Blower	12.00	HR			$51.25	$615.00
Confined Space Equipment	12.00	HR			$15.63	$187.56
Flatbed Trailers 12 to 18 Fort Trailer	12.00	HR			$12.75	$153.00
Vac Trailer 500 Gallon	12.00	HR			$56.36	$676.32
Foreman	12.00	HR			$77.15	$925.80
Operator: Large Equipment	12.00	HR			$60.68	$728.16
Laborer [2]	12.00	HR			$44.30	$1,063.20
Leadman	12.00	HR			$51.86	$622.32
Grout Exterior Joint	100.00	EACH			$20.50	$2,050.00
Material Buy	1.00	EACH	0.00	0.00	$602,873.14	$602,873.14
Junction Structure E (Armorock Polymer)	1.00	EACH			$552,735.00	$552,735.00
Access Hatch	1.00	LS			$17,355.00	$17,355.00
FRP Grating	1.00	LS			$32,783.14	$32,783.14
Slide Rail Shoring System	3.00	MO			$21,540.00	$64,620.00
Install Grating	1.00	EACH	160.00	160.00	$14,777.60	$14,777.60
CP-Concrete Replace Crew (0.20 EACH/DY, 5.00 DY)	1.00	EACH	160.00	160.00	$14,777.60	$14,777.60
Backhoe Light	40.00	HR			$86.11	$3,444.40
F-250 to F-450	40.00	HR			$39.86	$1,594.40
Foreman	40.00	HR			$77.15	$3,086.00
Laborer	40.00	HR			$44.30	$1,772.00
Operator: Small Equipment	40.00	HR			$55.34	$2,213.60
Pipelayer	40.00	HR			$51.05	$2,042.00
Confined Space Equipment	40.00	HR			$15.63	$625.20

Description	Quantity	UM	Man Hours	Man Hours per Unit	Unit Direct Cost	Total Direct Cost
(Item 19 - Furnish & Install New Junction Structure E continued)						
Temp Fence Around Pits	3.00	MO			$350.00	$1,050.00
20 - Install 60" Polymer Concrete Manhole Insert And 30" Diameter Composite Frame/Cover (Inserts)	**8.00**	**EACH**	**1,613.33**	**201.67**	**$69,859.71**	**$558,877.72**
Install Inserts	8.00	EACH	1,109.33	138.67	$21,930.36	$175,442.88
RH-Manhole Insert Install Crew (0.50 EACH/DY, 16.00 DY)	8.00	EACH	512.00	64.00	$7,480.96	$59,847.68
Dump Truck - 10 Wheel	128.00	HR			$88.40	$11,315.20
Excavator - 35K LB	128.00	HR			$105.46	$13,498.88
F-250 to F-450	128.00	HR			$39.86	$5,102.08
Flatbed Trailers 12 to 18 Fort Trailer	128.00	HR			$12.75	$1,632.00
Foreman	128.00	HR			$77.15	$9,875.20
Laborer [2]	128.00	HR			$44.30	$11,340.80
Operator: Small Equipment	128.00	HR			$55.34	$7,083.52
Mountain Grout	62.00	EACH			$450.00	$27,900.00
DUMP FEES	16.00	LOAD			$100.00	$1,600.00
RH-Manhole Insert Backfill Crew (0.50 EACH/DY, 16.00 DY)	8.00	EACH	512.00	64.00	$7,480.96	$59,847.68
Dump Truck - 10 Wheel	128.00	HR			$88.40	$11,315.20
Excavator - 35K LB	128.00	HR			$105.46	$13,498.88
F-250 to F-450	128.00	HR			$39.86	$5,102.08
Flatbed Trailers 12 to 18 Fort Trailer	128.00	HR			$12.75	$1,632.00
Foreman	128.00	HR			$77.15	$9,875.20
Laborer [2]	128.00	HR			$44.30	$11,340.80
Operator: Small Equipment	128.00	HR			$55.34	$7,083.52
1/2 Sack Slurry	140.70	CY			$103.51	$14,563.86
RH-Manhole Adjust Crew (3.00 EACH/DY, 2.67 DY)	8.00	EACH	85.33	10.67	$1,097.33	$8,778.67
F-250 to F-450	21.33	HR			$39.86	$850.35
Flatbed Trailers 12 to 18 Fort Trailer	21.33	HR			$12.75	$272.00
Foreman	21.33	HR			$77.15	$1,645.87
Laborer [2]	21.33	HR			$44.30	$1,890.13
Operator: Small Equipment	21.33	HR			$55.34	$1,180.59
Backhoe Light	21.33	HR			$86.11	$1,837.01
185 Compressor	21.33	HR			$51.69	$1,102.72
CONCRETE - MAG AA (4000 PSI)	12.60	CY			$151.19	$1,904.99
Concrete - Short Load Fee	4.00	EACH			$250.00	$1,000.00
Bench Rebuild And FRP Channel, Bench, And Tie Into Armorock	8.00	EACH	384.00	48.00	$30,454.52	$243,636.16
Manhole Prep & Rebuild Crew (0.50 EACH/DY, 16.00 DY)	8.00	EACH	384.00	48.00	$12,807.52	$102,460.16
12-inch Electric Blower	128.00	HR			$1.50	$192.00
185 Compressor	128.00	HR			$51.69	$6,616.32
Coating Truck	128.00	HR			$550.00	$70,400.00
Confined Space Entry	128.00	HR			$15.63	$2,000.64
Foreman	128.00	HR			$77.15	$9,875.20
Manhole Coating Assistant	128.00	HR			$48.84	$6,251.52
Manhole Coating Technician	128.00	HR			$55.66	$7,124.48

Description	Quantity	UM	Man Hours	Man Hours per Unit	Unit Direct Cost	Total Direct Cost
(Item 20 - Install 60" Polymer Concrete Manhole Insert And 30" Diameter Composite Frame/Cover (Inserts) continued)						
Ready Mix Concrete - C - 120	56.00	EACH			$21.00	$1,176.00
FRP Treatment Channel, Bench, And Tie Into To Armorock	8.00	EACH			$17,500.00	$140,000.00
Manhole Insert Material Buy	8.00	EACH	0.00	0.00	$15,560.00	$124,480.00
Armorock 60" Polymer Inserts	8.00	EACH			$15,560.00	$124,480.00
Concrete Restoration	1.00	EACH	120.00	120.00	$8,568.68	$8,568.68
CP-Concrete Sidewalk Crew (0.33 EACH/DY, 3.00 DY)	1.00	EACH	120.00	120.00	$7,963.92	$7,963.92
F-250 to F-450	24.00	HR			$39.86	$956.64
Box Trailer Pump Watch	24.00	HR			$12.75	$306.00
Concrete Finisher [3]	24.00	HR			$52.59	$3,786.48
Foreman	24.00	HR			$77.15	$1,851.60
Laborer	24.00	HR			$44.30	$1,063.20
CONCRETE - MAG AA (4000 PSI)	4.00	CY			$151.19	$604.76
Asphalt Min. Mob	1.00	LS			$3,250.00	$3,250.00
ADOT Chainlink Fence Removal & Replacements	1.00	EACH	0.00	0.00	$1,500.00	$1,500.00
Fence Subcontractor	1.00	LS			$1,500.00	$1,500.00
Manhole Inspections	8.00	EACH			$250.00	$2,000.00
21 - Install 60" Polymer Concrete Manhole And 30" Diameter Composite Frame/Cover (Tee-Style)	**1.00**	**EACH**	**608.00**	**608.00**	**$200,635.08**	**$200,635.08**
Install 60" Manhole	1.00	EACH	608.00	608.00	$166,385.08	$166,385.08
Excavate And Backfill Manhole	1.00	EACH	480.00	480.00	$124,401.00	$124,401.00
Manhole Crew (0.17 EACH/DY, 6.00 DY)	1.00	EACH	480.00	480.00	$64,954.08	$64,954.08
F-250 to F-450	48.00	HR			$39.86	$1,913.28
Dump Truck - 10 Wheel	48.00	HR			$88.40	$4,243.20
Water Truck 4000Gal	48.00	HR			$75.36	$3,617.28
Cat 395 (Weight 190K)	48.00	HR			$398.75	$19,140.00
Cat 950	48.00	HR			$104.46	$5,014.08
Backhoe Light	48.00	HR			$86.11	$4,133.28
Foreman	48.00	HR			$77.15	$3,703.20
Operator: Large Equipment [3]	48.00	HR			$60.68	$8,737.92
Pipelayer [2]	48.00	HR			$51.05	$4,900.80
Laborer [2]	48.00	HR			$44.30	$4,252.80
Truck Driver	48.00	HR			$55.19	$2,649.12
Water Truck Driver	48.00	HR			$55.19	$2,649.12
1/2 Sack Slurry	274.05	CY			$103.51	$28,366.92
Trucking (1.00 DY, 8.50 Trucks, 4.25 EACH/HR)	34.00	EACH			$270.00	$9,180.00
DUMP FEES	34.00	LOAD			$100.00	$3,400.00
Shoring	10.00	DY			$1,850.00	$18,500.00
Testing Structure	1.00	EACH	16.00	16.00	$2,099.56	$2,099.56
Manhole Testing (2.00 EACH/DY, 0.50 DY)	1.00	EACH	16.00	16.00	$2,099.56	$2,099.56
F-250 to F-450	4.00	HR			$39.86	$159.44
42-78 Inch Plug [2]	4.00	HR			$19.88	$159.04
185 Compressor	4.00	HR			$51.69	$206.76
Backhoe Light	4.00	HR			$86.11	$344.44
24-inch Trailer Mounted Blower	4.00	HR			$51.25	$205.00
Confined Space Equipment	4.00	HR			$15.63	$62.52

Description	Quantity	UM	Man Hours	Man Hours per Unit	Unit Direct Cost	Total Direct Cost
(Item 21 - Install 60" Polymer Concrete Manhole And 30" Diameter Composite Frame/Cover (Tee-Style) continued)						
Flatbed Trailers 12 to 18 Fort Trailer	4.00	HR			$12.75	$51.00
Foreman	4.00	HR			$77.15	$308.60
Pipelayer	4.00	HR			$51.05	$204.20
Laborer	4.00	HR			$44.30	$177.20
Operator: Small Equipment	4.00	HR			$55.34	$221.36
MH Adjustment	1.00	EACH	16.00	16.00	$1,762.98	$1,762.98
RH-Manhole Raised Crew (2.00 EACH/DY, 0.50 DY)	1.00	EACH	16.00	16.00	$1,460.60	$1,460.60
F-250 to F-450	4.00	HR			$39.86	$159.44
Backhoe Light	4.00	HR			$86.11	$344.44
Flatbed Trailers 12 to 18 Fort Trailer	4.00	HR			$12.75	$51.00
Foreman	4.00	HR			$77.15	$308.60
Laborer [2]	4.00	HR			$44.30	$354.40
Operator: Large Equipment	4.00	HR			$60.68	$242.72
CONCRETE - MAG AA (4000 PSI)	2.00	CY			$151.19	$302.38
Buy Manholes	1.00	EACH	0.00	0.00	$29,120.00	$29,120.00
Armorock 60" Manhole Tee Style	1.00	EACH			$29,120.00	$29,120.00
Wet Set Impression Ring Or Tee Adapter	1.00	EACH	96.00	96.00	$9,001.54	$9,001.54
CIP Manhole Crew (0.50 EACH/DY, 2.00 DY)	1.00	EACH	96.00	96.00	$7,343.84	$7,343.84
F-250 to F-450	16.00	HR			$39.86	$637.76
Backhoe Light	16.00	HR			$86.11	$1,377.76
Foreman	16.00	HR			$77.15	$1,234.40
Operator: Small Equipment	16.00	HR			$55.34	$885.44
Pipelayer	16.00	HR			$51.05	$816.80
Laborer	16.00	HR			$44.30	$708.80
Concrete Finisher [2]	16.00	HR			$52.59	$1,682.88
Forms / Rebar Cure	1.00	EACH			$750.00	$750.00
CONCRETE - MAG A (3000 PSI)	6.30	CY			$144.08	$907.70
FRP Treatment And Installation	1.00	EACH			$34,000.00	$34,000.00
Manhole Inspections	1.00	EACH			$250.00	$250.00
22 - Install 48" Polymer Concrete Manhole And 30" Diameter Composite Frame/Cover (Tee Style)	**4.00**	**EACH**	**2,432.00**	**608.00**	**$132,459.19**	**$529,836.77**
Install 48" Manhole	4.00	EACH	2,432.00	608.00	$117,209.19	$468,836.77
Excavate And Backfill Manhole	4.00	EACH	1,920.00	480.00	$90,100.45	$360,401.82
Manhole Crew (0.17 EACH/DY, 24.00 DY)	4.00	EACH	1,920.00	480.00	$60,447.36	$241,789.44
F-250 to F-450	192.00	HR			$39.86	$7,653.12
Dump Truck - 10 Wheel	192.00	HR			$88.40	$16,972.80
Water Truck 4000Gal	192.00	HR			$75.36	$14,469.12
Excavator - 160 K LB	192.00	HR			$304.86	$58,533.12
Cat 950	192.00	HR			$104.46	$20,056.32
Backhoe Light	192.00	HR			$86.11	$16,533.12
Foreman	192.00	HR			$77.15	$14,812.80
Operator: Large Equipment [3]	192.00	HR			$60.68	$34,951.68
Pipelayer [2]	192.00	HR			$51.05	$19,603.20
Laborer [2]	192.00	HR			$44.30	$17,011.20
Truck Driver	192.00	HR			$55.19	$10,596.48

Description	Quantity	UM	Man Hours	Man Hours per Unit	Unit Direct Cost	Total Direct Cost
(Item 22 - Install 48" Polymer Concrete Manhole And 30" Diameter Composite Frame/Cover (Tee Style) continued)						
Water Truck Driver	192.00	HR			$55.19	$10,596.48
1/2 Sack Slurry	398.83	CY			$103.51	$41,282.38
Trucking (1.00 DY, 14.75 Trucks, 7.38 EACH/HR)	59.00	EACH			$270.00	$15,930.00
DUMP FEES	59.00	LOAD			$100.00	$5,900.00
Shoring	30.00	DY			$1,850.00	$55,500.00
Testing Structure	4.00	EACH	64.00	16.00	$2,099.56	$8,398.24
Manhole Testing (2.00 EACH/DY, 2.00 DY)	4.00	EACH	64.00	16.00	$2,099.56	$8,398.24
F-250 to F-450	16.00	HR			$39.86	$637.76
42-78 Inch Plug [2]	16.00	HR			$19.88	$636.16
185 Compressor	16.00	HR			$51.69	$827.04
Backhoe Light	16.00	HR			$86.11	$1,377.76
24-inch Trailer Mounted Blower	16.00	HR			$51.25	$820.00
Confined Space Equipment	16.00	HR			$15.63	$250.08
Flatbed Trailers 12 to 18 Fort Trailer	16.00	HR			$12.75	$204.00
Foreman	16.00	HR			$77.15	$1,234.40
Pipelayer	16.00	HR			$51.05	$816.80
Laborer	16.00	HR			$44.30	$708.80
Operator: Small Equipment	16.00	HR			$55.34	$885.44
MH Adjustment	4.00	EACH	64.00	16.00	$1,937.39	$7,749.54
RH-Manhole Raised Crew (2.00 EACH/DY, 2.00 DY)	4.00	EACH	64.00	16.00	$1,460.60	$5,842.40
F-250 to F-450	16.00	HR			$39.86	$637.76
Backhoe Light	16.00	HR			$86.11	$1,377.76
Flatbed Trailers 12 to 18 Fort Trailer	16.00	HR			$12.75	$204.00
Foreman	16.00	HR			$77.15	$1,234.40
Laborer [2]	16.00	HR			$44.30	$1,417.60
Operator: Large Equipment	16.00	HR			$60.68	$970.88
CONCRETE - MAG AA (4000 PSI)	6.00	CY			$151.19	$907.14
Concrete - Short Load Fee	4.00	EACH			$250.00	$1,000.00
Buy Manholes	4.00	EACH	0.00	0.00	$14,070.25	$56,281.00
Armorock 48" Manhole Tee Style	4.00	EACH			$14,070.25	$56,281.00
Wet Set Impression Ring Or Tee Adapter	4.00	EACH	384.00	96.00	$9,001.54	$36,006.18
CIP Manhole Crew (0.50 EACH/DY, 8.00 DY)	4.00	EACH	384.00	96.00	$7,343.84	$29,375.36
F-250 to F-450	64.00	HR			$39.86	$2,551.04
Backhoe Light	64.00	HR			$86.11	$5,511.04
Foreman	64.00	HR			$77.15	$4,937.60
Operator: Small Equipment	64.00	HR			$55.34	$3,541.76
Pipelayer	64.00	HR			$51.05	$3,267.20
Laborer	64.00	HR			$44.30	$2,835.20
Concrete Finisher [2]	64.00	HR			$52.59	$6,731.52
Forms / Rebar Cure	4.00	EACH			$750.00	$3,000.00
CONCRETE - MAG A (3000 PSI)	25.20	CY			$144.08	$3,630.82
FRP Treatment And Installation	4.00	EACH			$15,000.00	$60,000.00
Manhole Inspections	4.00	EACH			$250.00	$1,000.00
23 - Existing Junction Structure No. 1 (New 60" Polymer MH Stackout & Abandonment Of South MH)	**1.00**	**EACH**	**432.00**	**432.00**	**$95,414.07**	**$95,414.07**

Description	Quantity	UM	Man Hours	Man Hours per Unit	Unit Direct Cost	Total Direct Cost
(Item 23 - Existing Junction Structure No. 1 (New 60" Polymer MH Stackout & Abandonment Of South MH) continued)						
Install 60" Manhole	1.00	EACH	416.00	416.00	$70,050.67	$70,050.67
Excavate And Backfill Manhole	1.00	EACH	272.00	272.00	$39,950.51	$39,950.51
Manhole Crew (0.25 EACH/DY, 4.00 DY)	1.00	EACH	272.00	272.00	$26,164.64	$26,164.64
F-250 to F-450	32.00	HR			$39.86	$1,275.52
Dump Truck - 10 Wheel [0.5]	32.00	HR			$88.40	$1,414.40
Water Truck 4000Gal	32.00	HR			$75.36	$2,411.52
Cat 320 (Weight 30K)	32.00	HR			$105.46	$3,374.72
Backhoe Light	32.00	HR			$86.11	$2,755.52
Foreman	32.00	HR			$77.15	$2,468.80
Operator: Large Equipment	32.00	HR			$60.68	$1,941.76
Pipelayer [2]	32.00	HR			$51.05	$3,267.20
Laborer [2]	32.00	HR			$44.30	$2,835.20
Truck Driver [0.5]	32.00	HR			$55.19	$883.04
Water Truck Driver	32.00	HR			$55.19	$1,766.08
Operator: Small Equipment	32.00	HR			$55.34	$1,770.88
1/2 Sack Slurry	67.20	CY			$103.51	$6,955.87
Trucking (1.00 DY, 2.25 Trucks, 1.13 EACH/HR)	9.00	EACH			$270.00	$2,430.00
DUMP FEES	9.00	LOAD			$100.00	$900.00
Shoring	7.00	DY			$500.00	$3,500.00
Testing Structure	1.00	EACH	16.00	16.00	$2,099.56	$2,099.56
Manhole Testing (2.00 EACH/DY, 0.50 DY)	1.00	EACH	16.00	16.00	$2,099.56	$2,099.56
F-250 to F-450	4.00	HR			$39.86	$159.44
42-78 Inch Plug [2]	4.00	HR			$19.88	$159.04
185 Compressor	4.00	HR			$51.69	$206.76
Backhoe Light	4.00	HR			$86.11	$344.44
24-inch Trailer Mounted Blower	4.00	HR			$51.25	$205.00
Confined Space Equipment	4.00	HR			$15.63	$62.52
Flatbed Trailers 12 to 18 Fort Trailer	4.00	HR			$12.75	$51.00
Foreman	4.00	HR			$77.15	$308.60
Pipelayer	4.00	HR			$51.05	$204.20
Laborer	4.00	HR			$44.30	$177.20
Operator: Small Equipment	4.00	HR			$55.34	$221.36
MH Adjustment	1.00	EACH	16.00	16.00	$1,762.98	$1,762.98
RH-Manhole Raised Crew (2.00 EACH/DY, 0.50 DY)	1.00	EACH	16.00	16.00	$1,460.60	$1,460.60
F-250 to F-450	4.00	HR			$39.86	$159.44
Backhoe Light	4.00	HR			$86.11	$344.44
Flatbed Trailers 12 to 18 Fort Trailer	4.00	HR			$12.75	$51.00
Foreman	4.00	HR			$77.15	$308.60
Laborer [2]	4.00	HR			$44.30	$354.40
Operator: Large Equipment	4.00	HR			$60.68	$242.72
CONCRETE - MAG AA (4000 PSI)	2.00	CY			$151.19	$302.38
Buy Manholes	1.00	EACH	0.00	0.00	$11,440.00	$11,440.00
Armorock 60" Manhole Tee Style	1.00	EACH			$11,440.00	$11,440.00
Wet Set Impression Ring Or Tee Adapter	1.00	EACH	112.00	112.00	$14,797.62	$14,797.62
CIP Manhole Crew (0.50 EACH/DY, 2.00 DY)	1.00	EACH	112.00	112.00	$13,192.48	$13,192.48
F-250 to F-450	16.00	HR			$39.86	$637.76

Description	Quantity	UM	Man Hours	Man Hours per Unit	Unit Direct Cost	Total Direct Cost
(Item 23 - Existing Junction Structure No. 1 (New 60" Polymer MH Stackout & Abandonment Of South MH) continued)						
Backhoe Light	16.00	HR			$86.11	$1,377.76
Excavator - 160 K LB	16.00	HR			$304.86	$4,877.76
Foreman	16.00	HR			$77.15	$1,234.40
Operator: Large Equipment	16.00	HR			$60.68	$970.88
Operator: Small Equipment	16.00	HR			$55.34	$885.44
Pipelayer	16.00	HR			$51.05	$816.80
Laborer	16.00	HR			$44.30	$708.80
Concrete Finisher [2]	16.00	HR			$52.59	$1,682.88
Forms / Rebar Cure	1.00	EACH			$750.00	$750.00
CONCRETE - MAG A (3000 PSI)	4.20	CY			$144.08	$605.14
Concrete - Short Load Fee	1.00	EACH			$250.00	$250.00
FRP Treatment And Installation	1.00	EACH			$24,000.00	$24,000.00
Man Entry T-Lock Removal	1.00	EACH	16.00	16.00	$1,363.40	$1,363.40
T-Lock Removal - No Grout Back (2.00 EACH/DY, 0.50 DY)	1.00	EACH	16.00	16.00	$1,363.40	$1,363.40
F-250 to F-450	4.00	HR			$39.86	$159.44
24-inch Trailer Mounted Blower	4.00	HR			$51.25	$205.00
Confined Space Equipment	4.00	HR			$15.63	$62.52
Dump Trailer	4.00	HR			$16.50	$66.00
Foreman	4.00	HR			$77.15	$308.60
Laborer [2]	4.00	HR			$44.30	$354.40
Leadman	4.00	HR			$51.86	$207.44
24 - Clean Existing 30" Sanitary Sewer	**938.00**	**LF**	**52.00**	**0.06**	**$10.28**	**$9,642.46**
30" Cleaning	938.00	LF	52.00	0.06	$10.28	$9,642.46
3 Pass Cleaning (469.00 LF/DY, 2.00 DY)	938.00	LF	32.00	0.03	$5.72	$5,368.96
Combo Vactor Truck	16.00	HR			$225.00	$3,600.00
Combo Truck Assistant	16.00	HR			$48.46	$775.36
Combo Truck Operator	16.00	HR			$62.10	$993.60
CCTV Inspection (4 Hour Minimum Or 1000 LF) (469.00 LF/DY, 2.00 DY)	938.00	LF	20.00	0.02	$4.56	$4,273.50
Camera Truck	16.00	HR			$165.00	$2,640.00
CCTV Technician	20.00	HR			$81.68	$1,633.50
25 - Clean Existing 48" Sanitary Sewer	**1,997.00**	**LF**	**156.00**	**0.08**	**$14.49**	**$28,927.38**
48" Cleaning	1,997.00	LF	156.00	0.08	$14.49	$28,927.38
3 Pass Cleaning (332.83 LF/DY, 6.00 DY)	1,997.00	LF	96.00	0.05	$8.07	$16,106.88
Combo Vactor Truck	48.00	HR			$225.00	$10,800.00
Combo Truck Assistant	48.00	HR			$48.46	$2,326.08
Combo Truck Operator	48.00	HR			$62.10	$2,980.80
CCTV Inspection (4 Hour Minimum Or 1000 LF) (332.83 LF/DY, 6.00 DY)	1,997.00	LF	60.00	0.03	$6.42	$12,820.50
Camera Truck	48.00	HR			$165.00	$7,920.00
CCTV Technician	60.00	HR			$81.68	$4,900.50
26 - Clean Existing 66" Sanitary Sewer	**652.00**	**LF**	**63.89**	**0.10**	**$18.82**	**$12,272.14**
66" Cleaning	652.00	LF	63.89	0.10	$18.17	$11,847.14
GC-Combo Hydro Truck Crew (265.33 LF/DY, 2.46 DY)	652.00	LF	39.32	0.06	$10.12	$6,596.54
Combo Vactor Truck	19.66	HR			$225.00	$4,423.12

Description	Quantity	UM	Man Hours	Man Hours per Unit	Unit Direct Cost	Total Direct Cost
(Item 26 - Clean Existing 66" Sanitary Sewer continued)						
Combo Truck Assistant	19.66	HR			$48.46	$952.64
Combo Truck Operator	19.66	HR			$62.10	$1,220.78
CCTV Inspection (4 Hour Minimum Or 1000 LF) (265.33 LF/DY, 2.46 DY)	652.00	LF	24.57	0.04	$8.05	$5,250.61
Camera Truck	19.66	HR			$165.00	$3,243.62
CCTV Technician	24.57	HR			$81.68	$2,006.99
Dump Fees	1.00	EACH			$425.00	$425.00
27 - Pipe Man Entry Cleaning & Detached Liner Removal	**2,669.00**	**LF**	**244.63**	**0.09**	**$7.74**	**$20,658.77**
Man-Entry T-lock Removal	2,669.00	LF	244.63	0.09	$7.74	$20,658.77
T-Lock Removal - No Grout Back (349.13 LF/DY, 7.64 DY)	2,669.00	LF	244.63	0.09	$7.74	$20,658.77
F-250 to F-450	61.16	HR			$39.86	$2,437.78
24-inch Trailer Mounted Blower	61.16	HR			$40.69	$2,488.54
Confined Space Equipment	61.16	HR			$15.63	$955.91
Dump Trailer	61.16	HR			$24.00	$1,467.81
Foreman	61.16	HR			$77.15	$4,718.39
Laborer [2]	61.16	HR			$44.30	$5,418.65
Leadman	61.16	HR			$51.86	$3,171.69
28 - Install 30" CIPP Liner	**938.00**	**LF**	**284.00**	**0.30**	**$292.97**	**$274,810.20**
CIPP Lining 30" W/ 1.5% Bond	938.00	LF			$254.77	$238,974.26
RH-CIPP Lining Support Crew & Confined Space (93.80 LF/DY, 10.00 DY)	938.00	LF	160.00	0.17	$13.76	$12,904.80
F-250 to F-450	80.00	HR			$39.86	$3,188.80
Foreman	80.00	HR			$77.15	$6,172.00
Laborer	80.00	HR			$44.30	$3,544.00
Post Pano	938.00	LF			$4.00	$3,752.00
Widen Bench	6.00	EACH	96.00	16.00	$1,894.52	$11,367.12
RH-Manhole Reconstruct Crew (2.00 EACH/DY, 3.00 DY)	6.00	EACH	96.00	16.00	$1,894.52	$11,367.12
24-inch Trailer Mounted Blower	24.00	HR			$51.25	$1,230.00
Backhoe Light	24.00	HR			$86.11	$2,066.64
Confined Space Equipment	24.00	HR			$15.63	$375.12
F-250 to F-450	24.00	HR			$39.86	$956.64
185 Compressor	24.00	HR			$51.69	$1,240.56
Jack Hammer	24.00	HR			$8.00	$192.00
Foreman	24.00	HR			$77.15	$1,851.60
Laborer [2]	24.00	HR			$44.30	$2,126.40
Operator: Small Equipment	24.00	HR			$55.34	$1,328.16
Water Support For CIPP Lining Steam Cure (938.00 LF/DY, 1.00 DY)	938.00	LF	12.00	0.01	$1.47	$1,375.54
Water Truck Driver	12.00	HR			$64.39	$772.66
Water Truck 4000Gal	8.00	HR			$75.36	$602.88
Post Pano	938.00	LF	16.00	0.02	$6.86	$6,436.48
Hydro Crew (938.00 LF/DY, 1.00 DY)	938.00	LF	16.00	0.02	$2.86	$2,684.48
Combo Vactor Truck	8.00	HR			$225.00	$1,800.00
Combo Truck Assistant	8.00	HR			$48.46	$387.68
Combo Truck Operator	8.00	HR			$62.10	$496.80

Description	Quantity	UM	Man Hours	Man Hours per Unit	Unit Direct Cost	Total Direct Cost
(Item 28 - Install 30" CIPP Liner continued)						
Post Pano	938.00	LF			$4.00	$3,752.00
29 - Install 48" CIPP Liner	**2,019.00**	**LF**	**352.00**	**0.17**	**$427.40**	**$862,917.53**
CIPP Lining 48" W/ 1.5% Bond	2,019.00	LF			$404.99	$817,674.81
RH-CIPP Lining Support Crew (168.25 LF/DY, 12.00 DY)	2,019.00	LF	192.00	0.10	$7.67	$15,485.76
F-250 to F-450	96.00	HR			$39.86	$3,826.56
Foreman	96.00	HR			$77.15	$7,406.40
Laborer	96.00	HR			$44.30	$4,252.80
Post Pano	2,019.00	LF	64.00	0.03	$9.32	$18,813.92
Hydro Crew (504.75 LF/DY, 4.00 DY)	2,019.00	LF	64.00	0.03	$5.32	$10,737.92
Combo Vactor Truck	32.00	HR			$225.00	$7,200.00
Combo Truck Assistant	32.00	HR			$48.46	$1,550.72
Combo Truck Operator	32.00	HR			$62.10	$1,987.20
Post Pano	2,019.00	LF			$4.00	$8,076.00
Setup & Remove Temp Water Source	1.00	LS	96.00	96.00	$10,943.04	$10,943.04
RH-Bypass Fusion 12-18in Crew (0.33 LS/DY, 3.00 DY)	1.00	LS	96.00	96.00	$10,943.04	$10,943.04
F-250 to F-450	24.00	HR			$39.86	$956.64
Backhoe Light	24.00	HR			$86.11	$2,066.64
Flatbed Trailers 12 to 18 Fort Trailer	24.00	HR			$12.75	$306.00
Fusion Machine 6-8in	24.00	HR			$64.65	$1,551.60
Pipe Trailer	24.00	HR			$23.65	$567.60
Foreman	24.00	HR			$77.15	$1,851.60
Fuser Technician	24.00	HR			$52.15	$1,251.60
Laborer	24.00	HR			$44.30	$1,063.20
Operator: Small Equipment	24.00	HR			$55.34	$1,328.16
30 - Install 66" CIPP Liner	**652.00**	**LF**	**240.00**	**0.37**	**$1,036.46**	**$675,768.80**
CIPP Lining 66" W/ 1.5% Bond	652.00	LF			$995.72	$649,209.44
RH-CIPP Lining Support Crew (81.50 LF/DY, 8.00 DY)	652.00	LF	128.00	0.20	$15.83	$10,323.84
F-250 to F-450	64.00	HR			$39.86	$2,551.04
Foreman	64.00	HR			$77.15	$4,937.60
Laborer	64.00	HR			$44.30	$2,835.20
Post Pano	652.00	LF	16.00	0.02	$8.12	$5,292.48
Hydro Crew (652.00 LF/DY, 1.00 DY)	652.00	LF	16.00	0.02	$4.12	$2,684.48
Combo Vactor Truck	8.00	HR			$225.00	$1,800.00
Combo Truck Assistant	8.00	HR			$48.46	$387.68
Combo Truck Operator	8.00	HR			$62.10	$496.80
Post Pano	652.00	LF			$4.00	$2,608.00
Setup & Remove Temp Water Source	1.00	LS	96.00	96.00	$10,943.04	$10,943.04
RH-Bypass Fusion 12-18in Crew (0.33 LS/DY, 3.00 DY)	1.00	LS	96.00	96.00	$10,943.04	$10,943.04
F-250 to F-450	24.00	HR			$39.86	$956.64
Backhoe Light	24.00	HR			$86.11	$2,066.64
Flatbed Trailers 12 to 18 Fort Trailer	24.00	HR			$12.75	$306.00
Fusion Machine 6-8in	24.00	HR			$64.65	$1,551.60
Pipe Trailer	24.00	HR			$23.65	$567.60

Description	Quantity	UM	Man Hours	Man Hours per Unit	Unit Direct Cost	Total Direct Cost
(Item 30 - Install 66" CIPP Liner continued)						
Foreman	24.00	HR			$77.15	$1,851.60
Fuser Technician	24.00	HR			$52.15	$1,251.60
Laborer	24.00	HR			$44.30	$1,063.20
Operator: Small Equipment	24.00	HR			$55.34	$1,328.16
31 - 48" East Bypass Pump Setup & Teardown	**1.00**	**EACH**	**1,599.00**	**1,599.00**	**$274,833.54**	**$274,833.54**
Mobilization/Demobilization Bypass Equipment	1.00	EACH	192.00	192.00	$24,495.36	$24,495.36
Mob Pipe	700.00	LF	12.00	0.02	$2.19	$1,530.96
GC-Mobilization Crew (1,400.00 LF/DY, 0.50 DY)	700.00	LF	12.00	0.02	$2.19	$1,530.96
Transport Truck Semi	4.00	HR			$83.31	$333.24
Transport Trailer - 48 FT	4.00	HR			$17.75	$71.00
Cat TL1255 (12K Telehandler Forklift)	4.00	HR			$126.85	$507.40
Laborer	4.00	HR			$44.30	$177.20
Operator: Small Equipment	4.00	HR			$55.34	$221.36
Truck Driver	4.00	HR			$55.19	$220.76
Mob Pumps	3.00	EACH	72.00	24.00	$3,061.92	$9,185.76
GC-Mobilization Crew (1.00 EACH/DY, 3.00 DY)	3.00	EACH	72.00	24.00	$3,061.92	$9,185.76
Transport Truck Semi	24.00	HR			$83.31	$1,999.44
Transport Trailer - 48 FT	24.00	HR			$17.75	$426.00
Cat TL1255 (12K Telehandler Forklift)	24.00	HR			$126.85	$3,044.40
Laborer	24.00	HR			$44.30	$1,063.20
Operator: Small Equipment	24.00	HR			$55.34	$1,328.16
Truck Driver	24.00	HR			$55.19	$1,324.56
Mob Appurtenances	1.00	EACH	12.00	12.00	$1,530.96	$1,530.96
GC-Mobilization Crew (2.00 EACH/DY, 0.50 DY)	1.00	EACH	12.00	12.00	$1,530.96	$1,530.96
Transport Truck Semi	4.00	HR			$83.31	$333.24
Transport Trailer - 48 FT	4.00	HR			$17.75	$71.00
Cat TL1255 (12K Telehandler Forklift)	4.00	HR			$126.85	$507.40
Laborer	4.00	HR			$44.30	$177.20
Operator: Small Equipment	4.00	HR			$55.34	$221.36
Truck Driver	4.00	HR			$55.19	$220.76
Demob Pipe	700.00	LF	12.00	0.02	$2.19	$1,530.96
GC-Mobilization Crew (1,400.00 LF/DY, 0.50 DY)	700.00	LF	12.00	0.02	$2.19	$1,530.96
Transport Truck Semi	4.00	HR			$83.31	$333.24
Transport Trailer - 48 FT	4.00	HR			$17.75	$71.00
Cat TL1255 (12K Telehandler Forklift)	4.00	HR			$126.85	$507.40
Laborer	4.00	HR			$44.30	$177.20
Operator: Small Equipment	4.00	HR			$55.34	$221.36
Truck Driver	4.00	HR			$55.19	$220.76
Demob Pumps	3.00	EACH	72.00	24.00	$3,061.92	$9,185.76
GC-Mobilization Crew (1.00 EACH/DY, 3.00 DY)	3.00	EACH	72.00	24.00	$3,061.92	$9,185.76
Transport Truck Semi	24.00	HR			$83.31	$1,999.44
Transport Trailer - 48 FT	24.00	HR			$17.75	$426.00
Cat TL1255 (12K Telehandler Forklift)	24.00	HR			$126.85	$3,044.40
Laborer	24.00	HR			$44.30	$1,063.20
Operator: Small Equipment	24.00	HR			$55.34	$1,328.16

Description	Quantity	UM	Man Hours	Man Hours per Unit	Unit Direct Cost	Total Direct Cost
(Item 31 - 48" East Bypass Pump Setup & Teardown continued)						
Truck Driver	24.00	HR			$55.19	$1,324.56
Demob Appurtenances	1.00	EACH	12.00	12.00	$1,530.96	$1,530.96
Mobe Appurtenances	1.00	UNIT	12.00	12.00	$1,530.96	$1,530.96
GC-Mobilization Crew (2.00 UNIT/DY, 0.50 DY)	1.00	UNIT	12.00	12.00	$1,530.96	$1,530.96
Transport Truck Semi	4.00	HR			$83.31	$333.24
Transport Trailer - 48 FT	4.00	HR			$17.75	$71.00
Cat TL1255 (12K Telehandler Forklift)	4.00	HR			$126.85	$507.40
Laborer	4.00	HR			$44.30	$177.20
Operator: Small Equipment	4.00	HR			$55.34	$221.36
Truck Driver	4.00	HR			$55.19	$220.76
Bypass Pump Station Setup & Removal	1.00	EACH	1,407.00	1,407.00	$250,338.18	$250,338.18
Cut Coupons	1.00	EACH			$2,800.00	$2,800.00
Bypass Pump Setup & Removal	3.00	EACH	904.00	301.33	$58,041.34	$174,124.01
Bypass Pump Setup	3.00	EACH	240.00	80.00	$11,125.97	$33,377.92
Crane To Setup Pump	2.00	DY			$5,600.00	$11,200.00
RH-Bypass Sewer Setup Crew (0.50 EACH/DY, 6.00 DY)	3.00	EACH	240.00	80.00	$7,392.64	$22,177.92
F-250 to F-450	48.00	HR			$39.86	$1,913.28
Cat TL1055 (10K Telehandler Forklift)	48.00	HR			$112.65	$5,407.20
Data Logger	48.00	HR			$12.50	$600.00
Flatbed Trailers 12 to 18 Fort Trailer	48.00	HR			$12.75	$612.00
Foreman	48.00	HR			$77.15	$3,703.20
Fuser Technician	48.00	HR			$52.15	$2,503.20
Laborer	48.00	HR			$44.30	$2,126.40
Operator: Small Equipment [2]	48.00	HR			$55.34	$5,312.64
Excavation Suction Pit & Subcut For Pump Station	1.00	EACH	192.00	192.00	$25,341.28	$25,341.28
Excavate Suction Pits (0.33 EACH/DY, 3.00 DY)	1.00	EACH	192.00	192.00	$22,751.28	$22,751.28
Cat 352 (Weight 110K)	24.00	HR			$190.54	$4,572.96
Cat 950	24.00	HR			$104.46	$2,507.04
Dump Truck - 10 Wheel	24.00	HR			$88.40	$2,121.60
F-250 to F-450	24.00	HR			$39.86	$956.64
Water Truck 4000Gal	24.00	HR			$75.36	$1,808.64
Foreman	24.00	HR			$77.15	$1,851.60
Laborer [2]	24.00	HR			$44.30	$2,126.40
Operator: Large Equipment [2]	24.00	HR			$60.68	$2,912.64
Truck Driver	24.00	HR			$55.19	$1,324.56
Water Truck Driver	24.00	HR			$55.19	$1,324.56
Leadman	24.00	HR			$51.86	$1,244.64
Trucking (4.75 DY, 0.37 Trucks, 0.18 EACH/HR)	7.00	EACH			$270.00	$1,890.00
DUMP FEES	7.00	LOAD			$100.00	$700.00
Pour Concrete In Suction Pit	1.00	EACH	40.00	40.00	$5,718.20	$5,718.20
SL-Manhole Coated 7ft Diameter Appurtenance Crew (1.00 EACH/DY, 1.00 DY)	1.00	EACH	40.00	40.00	$3,227.60	$3,227.60
F-250 to F-450	8.00	HR			$39.86	$318.88

Description	Quantity	UM	Man Hours	Man Hours per Unit	Unit Direct Cost	Total Direct Cost
(Item 31 - 48" East Bypass Pump Setup & Teardown continued)						
Backhoe Light	8.00	HR			$86.11	$688.88
Foreman	8.00	HR			$77.15	$617.20
Laborer [2]	8.00	HR			$44.30	$708.80
Operator: Large Equipment	8.00	HR			$60.68	$485.44
Pipelayer	8.00	HR			$51.05	$408.40
Ready Mix Concrete - MAG C 2000	16.80	CY			$148.25	$2,490.60
Repair T-Lock Coupons (Sonco Construction, Inc.)	1.00	EACH			$11,000.00	$11,000.00
Excavation And Backfill Suction Pits	1.00	EACH	240.00	240.00	$67,883.41	$67,883.41
Excavate Suction Pits (0.33 EACH/DY, 3.00 DY)	1.00	EACH	144.00	144.00	$20,443.44	$20,443.44
Cat 352 (Weight 110K)	24.00	HR			$190.54	$4,572.96
Cat 950	24.00	HR			$104.46	$2,507.04
Dump Truck - 10 Wheel	24.00	HR			$88.40	$2,121.60
F-250 to F-450	24.00	HR			$39.86	$956.64
Water Truck 4000Gal	24.00	HR			$75.36	$1,808.64
Foreman	24.00	HR			$77.15	$1,851.60
Laborer	24.00	HR			$44.30	$1,063.20
Operator: Large Equipment [2]	24.00	HR			$60.68	$2,912.64
Truck Driver	24.00	HR			$55.19	$1,324.56
Water Truck Driver	24.00	HR			$55.19	$1,324.56
1/2 Sack Slurry	231.00	CY			$103.51	$23,910.81
Backfill Pits Remove CMP (0.50 EACH/DY, 2.00 DY)	1.00	EACH	64.00	64.00	$7,309.28	$7,309.28
Cat 352 (Weight 110K)	16.00	HR			$190.54	$3,048.64
F-250 to F-450	16.00	HR			$39.86	$637.76
Foreman	16.00	HR			$77.15	$1,234.40
Laborer [2]	16.00	HR			$44.30	$1,417.60
Operator: Large Equipment	16.00	HR			$60.68	$970.88
Buy CMP 10"	1.00	EACH			$4,560.92	$4,560.92
GC-Combo Hydro Truck Crew (0.50 EACH/DY, 2.00 DY)	1.00	EACH	32.00	32.00	$5,368.96	$5,368.96
Combo Vactor Truck	16.00	HR			$225.00	$3,600.00
Combo Truck Assistant	16.00	HR			$48.46	$775.36
Combo Truck Operator	16.00	HR			$62.10	$993.60
Trucking (4.75 DY, 0.89 Trucks, 0.45 LOAD/HR)	17.00	LOAD			$270.00	$4,590.00
DUMP FEES	17.00	LOAD			$100.00	$1,700.00
Remove Pump Setup	3.00	EACH	192.00	64.00	$10,267.73	$30,803.20
RH-Bypass Sewer Setup Crew (0.50 EACH/DY, 6.00 DY)	3.00	EACH	192.00	64.00	$6,534.40	$19,603.20
F-250 to F-450	48.00	HR			$39.86	$1,913.28
Foreman	48.00	HR			$77.15	$3,703.20
Fuser Technician	48.00	HR			$52.15	$2,503.20
Laborer	48.00	HR			$44.30	$2,126.40
Cat TL1255 (12K Telehandler Forklift)	48.00	HR			$126.85	$6,088.80
Data Logger [0]	48.00	HR			$12.50	$0.00
Flatbed Trailers 12 to 18 Fort Trailer	48.00	HR			$12.75	$612.00

Description	Quantity	UM	Man Hours	Man Hours per Unit	Unit Direct Cost	Total Direct Cost
(Item 31 - 48" East Bypass Pump Setup & Teardown continued)						
Operator: Small Equipment	48.00	HR			$55.34	$2,656.32
Crane To Setup Pump	2.00	DY			$5,600.00	$11,200.00
Fuse Pipe For 48" Bypass	700.00	LF	503.00	0.72	$102.73	$71,914.17
18-inch Fusion	700.00	LF	35.00	0.05	$6.24	$4,367.65
RH-Bypass Fusion 12-18in Crew (800.00 LF/DY, 0.88 DY)	700.00	LF	35.00	0.05	$6.24	$4,367.65
F-250 to F-450	7.00	HR			$39.86	$279.02
Cat TL1055 (10K Telehandler Forklift)	7.00	HR			$112.65	$788.55
Pipe Trailer	7.00	HR			$23.65	$165.55
Backhoe Light	7.00	HR			$86.11	$602.77
Flatbed Trailers 12 to 18 Fort Trailer	7.00	HR			$12.75	$89.25
Fusion Machine 6-8in	7.00	HR			$64.65	$452.55
Foreman	7.00	HR			$77.15	$540.05
Fuser Technician	7.00	HR			$52.15	$365.05
Laborer	7.00	HR			$44.30	$310.10
Operator: Small Equipment [2]	7.00	HR			$55.34	$774.76
18" Misc. Fusion	8.00	EACH	40.00	5.00	$629.29	$5,034.32
RH-Bypass Fusion 12-18in Crew (8.00 LF/DY, 1.00 DY)	8.00	LF	40.00	5.00	$629.29	$5,034.32
F-250 to F-450	8.00	HR			$39.86	$318.88
Cat TL1055 (10K Telehandler Forklift)	8.00	HR			$112.65	$901.20
Pipe Trailer	8.00	HR			$23.65	$189.20
Backhoe Light	8.00	HR			$86.11	$688.88
Flatbed Trailers 12 to 18 Fort Trailer	8.00	HR			$12.75	$102.00
Fusion Machine 6-8in	8.00	HR			$64.65	$517.20
Foreman	8.00	HR			$77.15	$617.20
Fuser Technician	8.00	HR			$52.15	$417.20
Laborer	8.00	HR			$44.30	$354.40
Operator: Small Equipment	8.00	HR			$55.34	$442.72
Operator: Large Equipment	8.00	HR			$60.68	$485.44
Testing	700.00	LF	12.00	0.02	$2.03	$1,419.48
Pressure Test Crew (1,400.00 LF/DY, 0.50 DY)	700.00	LF	12.00	0.02	$2.03	$1,419.48
Backhoe Light	4.00	HR			$86.11	$344.44
F-250 to F-450	4.00	HR			$39.86	$159.44
Hydro Static Test Trailer	4.00	HR			$45.36	$181.44
Foreman	4.00	HR			$77.15	$308.60
Operator: Small Equipment	4.00	HR			$55.34	$221.36
Pipelayer	4.00	HR			$51.05	$204.20
Remove Bypass Pump Station	1.00	EACH	160.00	160.00	$28,260.48	$28,260.48
Crane To Remove Pumps	2.00	DY			$5,600.00	$11,200.00
RH-Bypass Sewer Takedown Crew (0.25 EACH/DY, 4.00 DY)	1.00	EACH	160.00	160.00	$17,060.48	$17,060.48
Backhoe Light	32.00	HR			$86.11	$2,755.52
Cat TL1055 (10K Telehandler Forklift)	32.00	HR			$112.65	$3,604.80
F-250 to F-450	32.00	HR			$39.86	$1,275.52
Flatbed Trailers 12 to 18 Fort Trailer	32.00	HR			$12.75	$408.00
Foreman	32.00	HR			$77.15	$2,468.80

Description	Quantity	UM	Man Hours	Man Hours per Unit	Unit Direct Cost	Total Direct Cost
(Item 31 - 48" East Bypass Pump Setup & Teardown continued)						
Laborer [2]	32.00	HR			$44.30	$2,835.20
Operator: Large Equipment	32.00	HR			$60.68	$1,941.76
Operator: Small Equipment	32.00	HR			$55.34	$1,770.88
Bypass Pipe Removal	700.00	LF	256.00	0.37	$46.90	$32,832.24
Flush Pipe & Pigging Crew	1,400.00	LF	136.00	0.10	$10.56	$14,784.80
Chlorine And Dechlorine	1.00	LS			$1,200.00	$1,200.00
Flush & Chlorinate Discharge Piping (1,400.00 LF/DY, 1.00 DY)	1,400.00	LF	40.00	0.03	$3.03	$4,237.76
Backhoe Light	8.00	HR			$86.11	$688.88
F-250 to F-450	8.00	HR			$39.86	$318.88
Hydro Static Test Trailer	8.00	HR			$45.36	$362.88
Water Truck 4000Gal	8.00	HR			$75.36	$602.88
Foreman	8.00	HR			$77.15	$617.20
Operator: Small Equipment	8.00	HR			$55.34	$442.72
Pipelayer	8.00	HR			$51.05	$408.40
Laborer	8.00	HR			$44.30	$354.40
Water Truck Driver	8.00	HR			$55.19	$441.52
RH-Bypass Sewer Takedown Crew (700.00 LF/DY, 2.00 DY)	1,400.00	LF	96.00	0.07	$6.68	$9,347.04
Backhoe Light	16.00	HR			$86.11	$1,377.76
Cat TL1055 (10K Telehandler Forklift)	16.00	HR			$112.65	$1,802.40
F-250 to F-450	16.00	HR			$39.86	$637.76
Flatbed Trailers 12 to 18 Fort Trailer	16.00	HR			$12.75	$204.00
Foreman	16.00	HR			$77.15	$1,234.40
Laborer [2]	16.00	HR			$44.30	$1,417.60
Operator: Large Equipment	16.00	HR			$60.68	$970.88
Operator: Small Equipment	16.00	HR			$55.34	$885.44
Pipelayer	16.00	HR			$51.05	$816.80
Remove And Replace Discharge Manhole	1.00	EACH	120.00	120.00	$18,047.44	$18,047.44
RH- Bypass Sewer Takedown Crew (0.33 EACH/DY, 3.00 DY)	1.00	EACH	120.00	120.00	$17,497.44	$17,497.44
Backhoe Light	24.00	HR			$86.11	$2,066.64
F-250 to F-450	24.00	HR			$39.86	$956.64
Flatbed Trailers 12 to 18 Fort Trailer	24.00	HR			$12.75	$306.00
Foreman	24.00	HR			$77.15	$1,851.60
Laborer [2]	24.00	HR			$44.30	$2,126.40
Operator: Small Equipment	24.00	HR			$55.34	$1,328.16
Cat TL1255 (12K Telehandler Forklift)	24.00	HR			$126.85	$3,044.40
Cat 352 (Weight 110K)	24.00	HR			$190.54	$4,572.96
Leadman	24.00	HR			$51.86	$1,244.64
Buy Manhole Section	1.00	EACH			$550.00	$550.00
Bypass Engineering Stamp	1.00	EACH			$1,500.00	$1,500.00
32 - 48" East Bypass Pump Operation	**289.00**	**DY**	**13,872.00**	**48.00**	**$10,884.80**	**$3,145,708.22**
Rental Equipment And Fuel	289.00	DY	0.00	0.00	$7,683.60	$2,220,561.42
Pump - 12in Pump [3]	2,312.00	HR			$59.75	$414,426.00
Box Trailer Pump Watch	2,312.00	HR			$12.75	$29,478.00
18-inch HDPE (LF/MO) [700]	13.44	MO			$1.25	$11,761.63

Description	Quantity	UM	Man Hours	Man Hours per Unit	Unit Direct Cost	Total Direct Cost
(Item 32 - 48" East Bypass Pump Operation continued)						
Fuel [170]	2,312.00	HR			$4.00	$1,572,160.00
Spill Kits	1.00	EACH			$850.00	$850.00
Fuel Cell 500 Gallons	13.44	MO			$500.00	$6,720.93
18-inch 45 OR 90 Degree Elbow [5]	13.44	MO			$86.00	$5,780.00
18-inch Flange Adapters With Backer Ring [8]	289.00	DY			$1.22	$2,820.64
18-inch Gate Valve [4]	13.44	MO			$750.00	$40,325.58
Large Manifold	13.44	MO			$2,650.00	$35,620.93
24-inch Suction Pipe [3]	13.44	MO			$1,250.00	$50,406.98
24-inch Suction 45-90 Degree DR17 [3]	13.44	MO			$48.90	$1,971.92
24-inch Flange Adapters With Backer Ring [3]	13.44	MO			$43.50	$1,754.16
Spill Containment [4]	13.44	MO			$195.00	$10,484.65
42-78 Inch Plug [0]	2,325.44	HR			$19.88	$0.00
Purchase Plugs	2.00	EACH			$18,000.00	$36,000.00
Pump Watch And Equipment	289.00	DY	13,872.00	48.00	$3,201.20	$925,146.80
RH-Bypass Sewer Pump Watch Crew (1.00 DY/DY, 289.00 DY)	289.00	DY	13,872.00	48.00	$3,171.20	$916,476.80
F-250 to F-450	2,312.00	HR			$39.86	$92,156.32
Light Tower [2]	2,312.00	HR			$12.25	$56,644.00
Operator: Small Equipment [6]	2,312.00	HR			$55.34	$767,676.48
Consumables	289.00	DY			$30.00	$8,670.00
33 - Furnish & Install 84" Polymer Concrete Sewer Manhole On CIP Base	**1.00**	**EACH**	**968.00**	**968.00**	**$278,133.06**	**$278,133.06**
Install New 60" In Line MH With Cast-In-Place Base	1.00	EACH	968.00	968.00	$278,133.06	$278,133.06
Manhole Crew (0.10 EACH/DY, 10.00 DY)	1.00	EACH	640.00	640.00	$91,807.20	$91,807.20
F-250 to F-450	80.00	HR			$39.86	$3,188.80
Cat 950	80.00	HR			$104.46	$8,356.80
Excavator - 160 K LB	80.00	HR			$304.86	$24,388.80
Backhoe Light	80.00	HR			$86.11	$6,888.80
Dump Truck - 10 Wheel	80.00	HR			$88.40	$7,072.00
Water Truck 4000Gal	80.00	HR			$75.36	$6,028.80
Foreman	80.00	HR			$77.15	$6,172.00
Operator: Large Equipment [2]	80.00	HR			$60.68	$9,708.80
Pipelayer	80.00	HR			$51.05	$4,084.00
Laborer [2]	80.00	HR			$44.30	$7,088.00
Truck Driver	80.00	HR			$55.19	$4,415.20
Water Truck Driver	80.00	HR			$55.19	$4,415.20
Aggregate - ABC MAG Spec	19.95	TON			$20.00	$399.00
1/2 Sack Slurry	176.40	CY			$103.51	$18,259.16
DUMP FEES	21.00	LOAD			$75.00	$1,575.00
Trucking (6.25 DY, 0.84 Trucks, 0.42 EACH/HR)	21.00	EACH			$270.00	$5,670.00
Concrete Cast In Place Bench	1.00	EACH	280.00	280.00	$36,910.76	$36,910.76
CIP Manhole Crew (0.20 EACH/DY, 5.00 DY)	1.00	EACH	280.00	280.00	$32,981.20	$32,981.20
F-250 to F-450	40.00	HR			$39.86	$1,594.40
Backhoe Light	40.00	HR			$86.11	$3,444.40
Excavator - 160 K LB	40.00	HR			$304.86	$12,194.40
Foreman	40.00	HR			$77.15	$3,086.00
Operator: Large Equipment	40.00	HR			$60.68	$2,427.20

Description	Quantity	UM	Man Hours	Man Hours per Unit	Unit Direct Cost	Total Direct Cost
(Item 33 - Furnish & Install 84" Polymer Concrete Sewer Manhole On CIP Base continued)						
Operator: Small Equipment	40.00	HR			$55.34	$2,213.60
Pipelayer	40.00	HR			$51.05	$2,042.00
Laborer	40.00	HR			$44.30	$1,772.00
Concrete Finisher [2]	40.00	HR			$52.59	$4,207.20
Forms / Rebar Cure	1.00	EACH			$2,568.00	$2,568.00
CONCRETE - MAG A (3000 PSI)	9.45	CY			$144.08	$1,361.56
Hydro Excavate Around Pipe	1.00	EACH	32.00	32.00	$5,368.96	$5,368.96
GC-Combo Hydro Truck Crew (0.50 EACH/DY, 2.00 DY)	1.00	EACH	32.00	32.00	$5,368.96	$5,368.96
Combo Vactor Truck	16.00	HR			$225.00	$3,600.00
Combo Truck Operator	16.00	HR			$62.10	$993.60
Combo Truck Assistant	16.00	HR			$48.46	$775.36
FRP Bench Treatment	1.00	EACH			$34,000.00	$34,000.00
Manhole - Polymer Manhole -84" Stackout	1.00	UNIT			$54,580.00	$54,580.00
Shoring	20.00	DY			$1,250.00	$25,000.00
MH Adjustment	1.00	EACH	16.00	16.00	$1,762.98	$1,762.98
RH-Manhole Raised Crew (2.00 EACH/DY, 0.50 DY)	1.00	EACH	16.00	16.00	$1,460.60	$1,460.60
F-250 to F-450	4.00	HR			$39.86	$159.44
Backhoe Light	4.00	HR			$86.11	$344.44
Flatbed Trailers 12 to 18 Fort Trailer	4.00	HR			$12.75	$51.00
Foreman	4.00	HR			$77.15	$308.60
Laborer [2]	4.00	HR			$44.30	$354.40
Operator: Large Equipment	4.00	HR			$60.68	$242.72
CONCRETE - MAG AA (4000 PSI)	2.00	CY			$151.19	$302.38
Cut Coupons	1.00	EACH			$2,800.00	$2,800.00
34 - 48" West Bypass Pump Setup & Teardown	**1.00**	**EACH**	**1,661.10**	**1,661.10**	**$238,901.81**	**$238,901.81**
Mobilization/Demobilizaion Bypass Equipment	1.00	EACH	336.00	336.00	$42,866.88	$42,866.88
Mob Pipe	2,550.00	LF	48.00	0.02	$2.40	$6,123.84
GC-Mobilization Crew (1,275.00 LF/DY, 2.00 DY)	2,550.00	LF	48.00	0.02	$2.40	$6,123.84
Transport Truck Semi	16.00	HR			$83.31	$1,332.96
Transport Trailer - 48 FT	16.00	HR			$17.75	$284.00
Cat TL1255 (12K Telehandler Forklift)	16.00	HR			$126.85	$2,029.60
Laborer	16.00	HR			$44.30	$708.80
Operator: Small Equipment	16.00	HR			$55.34	$885.44
Truck Driver	16.00	HR			$55.19	$883.04
Mob Pumps	3.00	EACH	72.00	24.00	$3,061.92	$9,185.76
GC-Mobilization Crew (1.00 EACH/DY, 3.00 DY)	3.00	EACH	72.00	24.00	$3,061.92	$9,185.76
Transport Truck Semi	24.00	HR			$83.31	$1,999.44
Transport Trailer - 48 FT	24.00	HR			$17.75	$426.00
Cat TL1255 (12K Telehandler Forklift)	24.00	HR			$126.85	$3,044.40
Laborer	24.00	HR			$44.30	$1,063.20
Operator: Small Equipment	24.00	HR			$55.34	$1,328.16
Truck Driver	24.00	HR			$55.19	$1,324.56
Mob Appurtenances	1.00	EACH	48.00	48.00	$6,123.84	$6,123.84
GC-Mobilization Crew (0.50 EACH/DY, 2.00 DY)	1.00	EACH	48.00	48.00	$6,123.84	$6,123.84

Description	Quantity	UM	Man Hours	Man Hours per Unit	Unit Direct Cost	Total Direct Cost
(Item 34 - 48" West Bypass Pump Setup & Teardown continued)						
Transport Truck Semi	16.00	HR			$83.31	$1,332.96
Transport Trailer - 48 FT	16.00	HR			$17.75	$284.00
Cat TL1255 (12K Telehandler Forklift)	16.00	HR			$126.85	$2,029.60
Laborer	16.00	HR			$44.30	$708.80
Operator: Small Equipment	16.00	HR			$55.34	$885.44
Truck Driver	16.00	HR			$55.19	$883.04
Demob Pipe	2,550.00	LF	48.00	0.02	$2.40	$6,123.84
GC-Mobilization Crew (1,275.00 LF/DY, 2.00 DY)	2,550.00	LF	48.00	0.02	$2.40	$6,123.84
Transport Truck Semi	16.00	HR			$83.31	$1,332.96
Transport Trailer - 48 FT	16.00	HR			$17.75	$284.00
Cat TL1255 (12K Telehandler Forklift)	16.00	HR			$126.85	$2,029.60
Laborer	16.00	HR			$44.30	$708.80
Operator: Small Equipment	16.00	HR			$55.34	$885.44
Truck Driver	16.00	HR			$55.19	$883.04
Demob Pumps	3.00	EACH	72.00	24.00	$3,061.92	$9,185.76
GC-Mobilization Crew (1.00 EACH/DY, 3.00 DY)	3.00	EACH	72.00	24.00	$3,061.92	$9,185.76
Transport Truck Semi	24.00	HR			$83.31	$1,999.44
Transport Trailer - 48 FT	24.00	HR			$17.75	$426.00
Cat TL1255 (12K Telehandler Forklift)	24.00	HR			$126.85	$3,044.40
Laborer	24.00	HR			$44.30	$1,063.20
Operator: Small Equipment	24.00	HR			$55.34	$1,328.16
Truck Driver	24.00	HR			$55.19	$1,324.56
Demob Appurtenances	1.00	EACH	48.00	48.00	$6,123.84	$6,123.84
Mobe Appurtenances	2.00	UNIT	48.00	24.00	$3,061.92	$6,123.84
GC-Mobilization Crew (1.00 UNIT/DY, 2.00 DY)	2.00	UNIT	48.00	24.00	$3,061.92	$6,123.84
Transport Truck Semi	16.00	HR			$83.31	$1,332.96
Transport Trailer - 48 FT	16.00	HR			$17.75	$284.00
Cat TL1255 (12K Telehandler Forklift)	16.00	HR			$126.85	$2,029.60
Laborer	16.00	HR			$44.30	$708.80
Operator: Small Equipment	16.00	HR			$55.34	$885.44
Truck Driver	16.00	HR			$55.19	$883.04
Bypass Pump Station Setup	1.00	EACH	1,085.10	1,085.10	$152,105.25	$152,105.25
Cut Coupons	1.00	EACH			$2,800.00	$2,800.00
Bypass Pump Setup	3.00	EACH	240.00	80.00	$11,125.97	$33,377.92
Crane To Setup Pump	2.00	DY			$5,600.00	$11,200.00
RH-Bypass Sewer Setup Crew (0.50 EACH/DY, 6.00 DY)	3.00	EACH	240.00	80.00	$7,392.64	$22,177.92
F-250 to F-450	48.00	HR			$39.86	$1,913.28
Cat TL1055 (10K Telehandler Forklift)	48.00	HR			$112.65	$5,407.20
Data Logger	48.00	HR			$12.50	$600.00
Flatbed Trailers 12 to 18 Fort Trailer	48.00	HR			$12.75	$612.00
Foreman	48.00	HR			$77.15	$3,703.20
Fuser Technician	48.00	HR			$52.15	$2,503.20
Laborer	48.00	HR			$44.30	$2,126.40
Operator: Small Equipment [2]	48.00	HR			$55.34	$5,312.64

Description	Quantity	UM	Man Hours	Man Hours per Unit	Unit Direct Cost	Total Direct Cost
(Item 34 - 48" West Bypass Pump Setup & Teardown continued)						
Fuse Pipe For 48" Bypass	2,550.00	LF	653.10	0.26	$33.38	$85,124.13
18-inch Fusion	2,550.00	LF	102.00	0.04	$5.69	$14,499.56
RH-Bypass Fusion 12-18in Crew (800.00 LF/DY, 3.19 DY)	2,550.00	LF	102.00	0.04	$5.69	$14,499.56
F-250 to F-450	25.50	HR			$39.86	$1,016.43
Backhoe Light	25.50	HR			$86.11	$2,195.81
Cat TL1055 (10K Telehandler Forklift)	25.50	HR			$112.65	$2,872.58
Flatbed Trailers 12 to 18 Fort Trailer	25.50	HR			$12.75	$325.13
Fusion Machine 6-8in	25.50	HR			$64.65	$1,648.58
Pipe Trailer	25.50	HR			$23.65	$603.08
Foreman	25.50	HR			$77.15	$1,967.33
Fuser Technician	25.50	HR			$52.15	$1,329.83
Laborer	25.50	HR			$44.30	$1,129.65
Operator: Small Equipment	25.50	HR			$55.34	$1,411.17
18" Misc. Fusion	8.00	EACH	32.00	4.00	$568.61	$4,548.88
RH-Bypass Fusion 12-18in Crew (8.00 LF/DY, 1.00 DY)	8.00	LF	32.00	4.00	$568.61	$4,548.88
F-250 to F-450	8.00	HR			$39.86	$318.88
Backhoe Light	8.00	HR			$86.11	$688.88
Cat TL1055 (10K Telehandler Forklift)	8.00	HR			$112.65	$901.20
Flatbed Trailers 12 to 18 Fort Trailer	8.00	HR			$12.75	$102.00
Fusion Machine 6-8in	8.00	HR			$64.65	$517.20
Pipe Trailer	8.00	HR			$23.65	$189.20
Foreman	8.00	HR			$77.15	$617.20
Fuser Technician	8.00	HR			$52.15	$417.20
Laborer	8.00	HR			$44.30	$354.40
Operator: Small Equipment	8.00	HR			$55.34	$442.72
Testing	2,550.00	LF	22.70	0.01	$1.05	$2,684.59
Pressure Test Crew (2,696.63 LF/DY, 0.95 DY)	2,550.00	LF	22.70	0.01	$1.05	$2,684.59
Backhoe Light	7.57	HR			$86.11	$651.42
F-250 to F-450	7.57	HR			$39.86	$301.54
Hydro Static Test Trailer	7.57	HR			$45.36	$343.15
Foreman	7.57	HR			$77.15	$583.64
Operator: Small Equipment	7.57	HR			$55.34	$418.65
Pipelayer	7.57	HR			$51.05	$386.19
Remove Bypass Pump Station	1.00	EACH	160.00	160.00	$28,260.48	$28,260.48
Crane To Remove Pumps	2.00	DY			$5,600.00	$11,200.00
RH-Bypass Sewer Takedown Crew (0.25 EACH/DY, 4.00 DY)	1.00	EACH	160.00	160.00	$17,060.48	$17,060.48
Backhoe Light	32.00	HR			$86.11	$2,755.52
Cat TL1055 (10K Telehandler Forklift)	32.00	HR			$112.65	$3,604.80
F-250 to F-450	32.00	HR			$39.86	$1,275.52
Flatbed Trailers 12 to 18 Fort Trailer	32.00	HR			$12.75	$408.00
Foreman	32.00	HR			$77.15	$2,468.80
Laborer [2]	32.00	HR			$44.30	$2,835.20
Operator: Large Equipment	32.00	HR			$60.68	$1,941.76
Operator: Small Equipment	32.00	HR			$55.34	$1,770.88

Description	Quantity	UM	Man Hours	Man Hours per Unit	Unit Direct Cost	Total Direct Cost
(Item 34 - 48" West Bypass Pump Setup & Teardown continued)						
Bypass Pipe Removal	2,550.00	LF	336.40	0.13	$13.78	$35,130.62
Flush Pipe & Pigging Crew	4,800.00	LF	336.40	0.07	$7.32	$35,130.62
Chlorine And Dechlorine	1.00	LS			$1,200.00	$1,200.00
Flush And Chlorinate Pipe (1,399.42 LF/DY, 3.43 DY)	4,800.00	LF	137.20	0.03	$3.03	$14,535.52
Backhoe Light	27.44	HR			$86.11	$2,362.86
F-250 to F-450	27.44	HR			$39.86	$1,093.76
Hydro Static Test Trailer	27.44	HR			$45.36	$1,244.68
Water Truck 4000Gal	27.44	HR			$75.36	$2,067.88
Foreman	27.44	HR			$77.15	$2,117.00
Operator: Small Equipment	27.44	HR			$55.34	$1,518.53
Pipelayer	27.44	HR			$51.05	$1,400.81
Laborer	27.44	HR			$44.30	$1,215.59
Water Truck Driver	27.44	HR			$55.19	$1,514.41
RH-Bypass Sewer Takedown Crew (1,156.63 LF/DY, 4.15 DY)	4,800.00	LF	199.20	0.04	$4.04	$19,395.11
Backhoe Light	33.20	HR			$86.11	$2,858.85
Cat TL1055 (10K Telehandler Forklift)	33.20	HR			$112.65	$3,739.98
F-250 to F-450	33.20	HR			$39.86	$1,323.35
Flatbed Trailers 12 to 18 Fort Trailer	33.20	HR			$12.75	$423.30
Foreman	33.20	HR			$77.15	$2,561.38
Laborer [2]	33.20	HR			$44.30	$2,941.52
Operator: Large Equipment	33.20	HR			$60.68	$2,014.58
Operator: Small Equipment	33.20	HR			$55.34	$1,837.29
Pipelayer	33.20	HR			$51.05	$1,694.86
Remove Pump Setup	3.00	EACH	192.00	64.00	$10,267.73	$30,803.20
RH-Bypass Sewer Setup Crew (0.50 EACH/DY, 6.00 DY)	3.00	EACH	192.00	64.00	$6,534.40	$19,603.20
F-250 to F-450	48.00	HR			$39.86	$1,913.28
Foreman	48.00	HR			$77.15	$3,703.20
Fuser Technician	48.00	HR			$52.15	$2,503.20
Laborer	48.00	HR			$44.30	$2,126.40
Cat TL1255 (12K Telehandler Forklift)	48.00	HR			$126.85	$6,088.80
Data Logger [0]	48.00	HR			$12.50	$0.00
Flatbed Trailers 12 to 18 Fort Trailer	48.00	HR			$12.75	$612.00
Operator: Small Equipment	48.00	HR			$55.34	$2,656.32
Crane To Setup Pump	2.00	DY			$5,600.00	$11,200.00
Bypass Engineering Stamp	1.00	EACH			$1,500.00	$1,500.00
Excavation/Subcut For Pump Station	1.00	EACH	128.00	128.00	$18,833.68	$18,833.68
Subcut Crew (0.50 EACH/DY, 2.00 DY)	1.00	EACH	128.00	128.00	$16,983.68	$16,983.68
F-250 to F-450	16.00	HR			$39.86	$637.76
Excavator - 160 K LB	16.00	HR			$304.86	$4,877.76
Dump Truck - 10 Wheel	16.00	HR			$88.40	$1,414.40
Water Truck 4000Gal	16.00	HR			$75.36	$1,205.76
Cat 950	16.00	HR			$104.46	$1,671.36
Foreman	16.00	HR			$77.15	$1,234.40
Operator: Large Equipment [2]	16.00	HR			$60.68	$1,941.76

Description	Quantity	UM	Man Hours	Man Hours per Unit	Unit Direct Cost	Total Direct Cost
(Item 34 - 48" West Bypass Pump Setup & Teardown continued)						
Pipelayer	16.00	HR			$51.05	$816.80
Laborer [2]	16.00	HR			$44.30	$1,417.60
Truck Driver	16.00	HR			$55.19	$883.04
Water Truck Driver	16.00	HR			$55.19	$883.04
Trucking (1.00 DY, 1.25 Trucks, 0.63 EACH/HR)	5.00	EACH			$270.00	$1,350.00
DUMP FEES	5.00	LOAD			$100.00	$500.00
Backfill & Restore Subcut/Pump Station	1.00	EACH	112.00	112.00	$13,546.00	$13,546.00
Subcut Crew (0.50 EACH/DY, 2.00 DY)	1.00	EACH	112.00	112.00	$11,824.00	$11,824.00
F-250 to F-450	16.00	HR			$39.86	$637.76
Dump Truck - 10 Wheel	16.00	HR			$88.40	$1,414.40
Water Truck 4000Gal	16.00	HR			$75.36	$1,205.76
Cat 950	16.00	HR			$104.46	$1,671.36
Cat CB24 (Roller)	16.00	HR			$32.02	$512.32
Foreman	16.00	HR			$77.15	$1,234.40
Operator: Large Equipment	16.00	HR			$60.68	$970.88
Pipelayer	16.00	HR			$51.05	$816.80
Laborer	16.00	HR			$44.30	$708.80
Truck Driver	16.00	HR			$55.19	$883.04
Water Truck Driver	16.00	HR			$55.19	$883.04
Operator: Small Equipment	16.00	HR			$55.34	$885.44
Aggregate - ABC MAG Spec	86.10	TON			$20.00	$1,722.00
Paving Subcontractor	134.00	SY			$75.00	$10,050.00
35 - 48" West Bypass Pump Operation	**122.00**	**DY**	**5,856.00**	**48.00**	**$17,136.73**	**$2,090,680.70**
Rental Equipment And Fuel	122.00	DY	0.00	0.00	$13,935.53	$1,700,134.30
12-Inch Standard Pump [3]	1,096.00	HR			$52.82	$173,672.16
Box Trailer Pump Watch	1,096.00	HR			$12.75	$13,974.00
18-inch HDPE (LF/MO) [2,550]	6.37	MO			$1.25	$20,311.05
Fuel [313]	1,096.00	HR			$4.00	$1,372,192.00
Spill Kits	1.00	EACH			$850.00	$850.00
2-inch ARV And Containment	6.37	MO			$195.00	$1,242.56
Fuel Cell 500 Gallons	6.37	MO			$500.00	$3,186.05
18-inch 45 OR 90 Degree Elbow	6.37	MO			$86.00	$548.00
18-inch Flange Adapters With Backer Ring	137.00	DY			$1.22	$167.14
18-inch Gate Valve	6.37	MO			$750.00	$4,779.07
Large Manifold	6.37	MO			$2,650.00	$16,886.05
24-inch Flange Adapters With Backer Ring	6.37	MO			$43.50	$277.19
24-inch Suction 45-90 Degree DR17	6.37	MO			$48.90	$311.60
24-inch Suction Pipe	6.37	MO			$1,250.00	$7,965.12
Spill Containment	6.37	MO			$195.00	$1,242.56
42-78 Inch Plug [0]	976.00	HR			$19.88	$0.00
Purchase Plugs	2.00	EACH			$18,000.00	$36,000.00
8-inch HDPE (LF/MO) [1,000]	5.67	MO			$1.00	$5,674.42
6-Inch Centrifugal [2]	976.00	HR			$12.78	$24,946.56
6-Inch High Pressure Hose (EA/MO) [2]	976.00	HR			$1.18	$2,303.36
6-Inch Valve [2]	976.00	HR			$1.72	$3,357.44
Small Manifold	976.00	HR			$7.10	$6,929.60

Description	Quantity	UM	Man Hours	Man Hours per Unit	Unit Direct Cost	Total Direct Cost
(Item 35 - 48" West Bypass Pump Operation continued)						
4-12 Inch Plug [2]	976.00	HR			$1.70	$3,318.40
Pump Watch And Equipment	122.00	DY	5,856.00	48.00	$3,201.20	$390,546.40
RH-Bypass Sewer Pump Watch Crew (1.00 DY/DY, 122.00 DY)	122.00	DY	5,856.00	48.00	$3,171.20	$386,886.40
F-250 to F-450	976.00	HR			$39.86	$38,903.36
Light Tower [2]	976.00	HR			$12.25	$23,912.00
Operator: Small Equipment [6]	976.00	HR			$55.34	$324,071.04
Consumables	122.00	DY			$30.00	$3,660.00
36 - General Conditions	**15.00**	**MO**	**8,640.00**	**576.00**	**$90,483.09**	**$1,357,246.29**
Job Office Expense	15.00	MO			$500.00	$7,500.00
Office Power	15.00	MO			$500.00	$7,500.00
ST&S	53,962.76	MH			$3.00	$161,888.29
Software/ Hardware / Devices	15.00	MO			$250.00	$3,750.00
Water And Ice	15.00	MO			$1,000.00	$15,000.00
Site Security	15.00	MO			$3,000.00	$45,000.00
Project Management	15.00	MO	2,640.00	176.00	$23,474.88	$352,123.20
Project Manager (0.05 MO/DY, 330.00 DY)	15.00	MO	2,640.00	176.00	$23,474.88	$352,123.20
F-150	2,640.00	HR			$28.36	$74,870.40
Project Manager	2,640.00	HR			$105.02	$277,252.80
Project Engineer	15.00	MO	2,640.00	176.00	$19,747.20	$296,208.00
Project Engineer (0.05 MO/DY, 330.00 DY)	15.00	MO	2,640.00	176.00	$19,747.20	$296,208.00
F-150	2,640.00	HR			$28.36	$74,870.40
Project Engineer	2,640.00	HR			$83.84	$221,337.60
Superintendent (Full-Time)	15.00	MO	2,640.00	176.00	$23,166.88	$347,503.20
Project Superintendent (0.05 MO/DY, 330.00 DY)	15.00	MO	2,640.00	176.00	$23,166.88	$347,503.20
F-150	2,640.00	HR			$28.36	$74,870.40
Project Superintendent	2,640.00	HR			$103.27	$272,632.80
Bypass Superintendent (Half-Time)	9.00	MO	720.00	80.00	$10,530.40	$94,773.60
Project Superintendent (0.10 MO/DY, 90.00 DY)	9.00	MO	720.00	80.00	$10,530.40	$94,773.60
F-150	720.00	HR			$28.36	$20,419.20
Project Superintendent	720.00	HR			$103.27	$74,354.40
Dumpster Service	15.00	MO			$500.00	$7,500.00
Portable Restroom	15.00	MO			$1,000.00	$15,000.00
Armorock QA/QC Travel Expenses	1.00	LS			$3,500.00	$3,500.00

Exhibit D4: List of GMP Documents
LOOP 101 AND 202 FREEWAY
66-INCH REDUNDANT SEWER PROJECT
COC PROJECT NO.: WW2402.401
GURANTEDD MAXIMUM PRICE

DOCUMENTS:

- **TECHNICAL SPECIFICATIONS:** CITY OF CHANDLER, ARIZONA – LOOP 101 AND 202 FREEWAY 66-INCH REDUNDANT SEWER PROJECT, TECHNICAL SPECIFICATIONS, MAY 2025
- **PROJECT DRAWINGS:** CITY OF CHANDLER, ARIZONA – LOOP 101 AND 202 FREEWAY 66-INCH REDUNDANT SEWER PROJECT, CITY PROJECT NO. WW2402-401, JUNE 2025

EXHIBIT E

SUBCONTRACTOR DOCUMENTS WITH CM@RISK

Any subcontractor assumptions, clarifications, exclusions, terms & conditions, signature blocks, etc. included are strictly between the CM@RISK and their subcontractors, and do not apply to the Agreement between the CM@RISK and the City.

SUBCONTRACTOR'S LIST FORM

If CM@Risk intends to subcontract any portion of this Agreement, the CM@Risk must submit the name, address, and contractor's license number (if applicable) of each subcontractor, including the work component of such subcontracting. Include the form with the bid submittal documents. CM@Risk may make multiple copies of this form as needed.

Company Name:	
Contact Name:	
Contact Email:	
Contact Phone:	
Work Component:	
Percentage of Total Work Performed:	

Company Name:	
Contact Name:	
Contact Email:	
Contact Phone:	
Work Component:	
Percentage of Total Work Performed:	

Company Name:	
Contact Name:	
Contact Email:	
Contact Phone:	
Work Component:	
Percentage of Total Work Performed:	

Company Name:	
Contact Name:	
Contact Email:	
Contact Phone:	
Work Component:	
Percentage of Total Work Performed:	

Company Name:	
Contact Name:	
Contact Email:	
Contact Phone:	
Work Component:	
Percentage of Total Work Performed:	

Company Name:	
Contact Name:	
Contact Email:	
Contact Phone:	
Work Component:	
Percentage of Total Work Performed:	

EXHIBIT F

GIS / GPS DATA DELIVERY REQUIREMENTS

GIS / GPS Data Delivery Requirements

Contractor shall provide survey grade GPS / GIS data, meeting the following requirements for all facilities to be owned and/or operated by the City of Chandler.

a) ESRI File Geodatabase format:

All GPS point data, along with corresponding GIS Attribute data, must be submitted in ESRI File Geodatabase format. The City of Chandler will provide a copy of the File Geodatabase in ESRI ArcGIS format. Please submit your request through the Project Manager.

b) Data dictionary and Attribute data:

Attribute data should be provided for each of the GPS'd Utility Features listed in Section 'd' below. All Attribute data should conform to the ESRI File Geodatabase format, provided by the City. A copy of the data dictionary is also attached here for reference.

c) Coordinate System:

Horizontal Datum: Arizona State Plane Coordinates, Central Zone NAD83 (HARN)
Vertical Datum: NAVD88

d) Point Data for GPS:

1) Water System Features:
   - Water main location (top of pipe), size and material (one (1) coordinate provided every 100 feet minimum) and at fittings.
   - Water fitting location (top of feature), size, material and type including: Bend (22.5, 45, or 90), Tee, Tapping Sleeve, Cross, Coupling, End Cap, Line Stop, Reducer, Saddle, Other.
   - Water valve location (center of valve box cover), size and type.
   - Fire hydrant location (top of hydrant), manufacturer and year.
   - Water service line location (at connection to main, any bends, and termination at meter box or meter vault or at the edge of easement or ROW), size and material.
   - Water blow-off and air release valve location (center of cover), size, type and manufacturer.
   - Water manhole or vault location (center of cover), size and type.

2) Waste Water System Features:
   - Sewer manhole and cleanout location (center of cover), size, material, and cover type.
   - Sewer gravity main location (invert of pipe), size, material and flow direction (from) at all manholes, cleanouts and structures.
   - Sewer service line location, size and material (at connection to main, and termination at cleanout, or stub out at edge of the easement or ROW).
   - Sewer force main location (top of pipe), size, and material (one (1) coordinate provided every 100 feet minimum) and at fittings.

- Sewer force main (and gravity) fitting location (top of feature), size, material and type including: Bend (22.5, 45, or 90), Tee, Tapping Sleeve, Cross, Coupling, End Cap, Linestop, Reducer, Saddle, Wye, Other
- Sewer force main valve location (center of valve box cover), size and type.
- Sewer force main air release valve location (center of cover), size, type and manufacturer.
- Sewer force main manhole or vault location (center of cover), size and material.
- Sewer structure (center of structure), type (diversion, junction box).

3) Reclaimed Water System Features:
   - Reclaimed main location (top of pipe), size, and material (one (1) coordinate provided every 100 feet minimum) and at fittings.
   - Reclaimed fitting location (top of feature), size, material and type including: Bend (22.5, 45, or 90), Tee, Tapping Sleeve, Cross, Coupling, End Cap, Linestop, Reducer, Saddle, Other.
   - Reclaimed valve location (center of valve box cover), size and type.
   - Reclaimed service line location (at connection to main, any bends, and termination at meter box or meter vault or at the edge of easement or ROW), size and material.
   - Reclaimed blow-off and air release valve location (center of cover), size, type and manufacturer.
   - Reclaimed manhole or vault location (center of cover), size and type.

4) Storm Water System Features:
   - Storm manhole and cleanout location (center of cover), size, material, and cover type.
   - Storm gravity main location (invert of pipe), size, material, and flow direction (from) at all manholes, cleanouts and structures.
   - Storm structure location (center of structure), type and category including: Drywell, Catch Basin, Scupper, Bubbler Box, and Collection Vault.

5) Streetlight Feature:
   - Streetlights

6) Standard GPS Metadata on all points collected: Date, Time, Horizontal Accuracy, Vertical Accuracy, Latitude, Longitude, Altitude, Surveyor, and Comments.

7) Electronic Data Submittal: Each submittal must consist of
   - ESRI – ArcGIS Geodatabase with cumulative data and attributes
   - Construction plans with collected utilities clearly redlined and changes marked

The frequency of data submittals will be every two weeks after water, sewer, reclaim or storm assets go into the ground. Please email submittals to: GIS@chandleraz.gov

DATA DICTIONARY: WATER

WATER_BACKFLOW				
Field Name	**Alias Name**	**Type**	**Length**	**Domain**
OBJECTID	OBJECTID	OID		
SHAPE	SHAPE	Geometry		
FEATUREOWNER	FEATUREOWNER	Text	25	GIS_BACKFLOW_FEATUREOWNER
LIFECYCLESTATUS	LIFECYCLESTATUS	Text	25	GIS_BACKFLOW_LIFECYCLESTATUS
SPATIALSOURCE	SPATIALSOURCE	Text	25	GIS_BACKFLOW_SPATIALSOURCE
SIZE	SIZE	Double		
TYPE	TYPE	Text	25	GIS_BACKFLOW_TYPE
MANUFACTURER	MANUFACTURER	Text	25	GIS_BACKFLOW_MANUFACTURER
GPS_DATE	GPS_DATE	Date		
GPS_TIME	GPS_TIME	Text	15	
LATITUDE	LATITUDE	Double		
LONGITUDE	LONGITUDE	Double		
ALTITUDE	ALTITUDE	Double		
HORIZONTAL_ACCURACY	HORIZONTAL_ACCURACY (m)	Double		
VERTICAL_ACCURACY	VERTICAL_ACCURACY (m)	Double		
GPS_COMMENT	GPS_COMMENT	Text	30	

WATER_FITTING				
Field Name	**Alias Name**	**Data Type**	**Length**	**Domain**
OBJECTID	OBJECTID	OID		
SHAPE	SHAPE	Geometry		
FEATUREOWNER	FEATUREOWNER	Text	20	WS_FEATUREOWNER
LIFECYCLESTATUS	LIFECYCLESTATUS	Text	20	WS_LIFECYCLESTATUS
SPATIALSOURCE	SPATIALSOURCE	Text	20	WS_SPATIALSOURCE_STD
MATERIAL	MATERIAL	Text	20	WS_FITTING_MATERIAL
DIAMETER1	DIAMETER1	Text	8	RWS_FITTING_DIAMETER
DIAMETER2	DIAMETER2	Text	8	RWS_FITTING_DIAMETER
TYPE	TYPE	Text	30	WS_FITTING_TYPE
BEND	BEND	Text	20	WS_FITTING_BEND
GPS_DATE	GPS_DATE	Date		
GPS_TIME	GPS_TIME	Text	10	
LATITUDE	LATITUDE	Double		
LONGITUDE	LONGITUDE	Double		
ALTITUDE	ALTITUDE	Double		
HORIZONTAL_ACCURACY	HORIZONTAL_ACCURACY (m)	Double		
VERTICAL_ACCURACY	VERTICAL_ACCURACY (m)	Double		
GPS_COMMENT	GPS_COMMENT	Text	30	

WATER_HYDRANT				
Field Name	**Alias Name**	**Type**	**Length**	**Domain**
OBJECTID	OBJECTID	OID		
SHAPE	SHAPE	Geometry		
FEATUREOWNER	Feature Owner	Text	25	WS_FEATUREOWNER
LIFECYCLESTATUS	Lifecycle Status	Text	25	WS_LIFECYCLESTATUS
SPATIALSOURCE	Spatial Source	Text	25	WS_SPATIALSOURCE_STD
BARRELDIAMETER	Barrel Diameter	Double		
LARGENOZZLEDIAMETER	Large Nozzle Diameter	Double		
SMALLNOZZLEDIAMETER	Small Nozzle Diameter	Double		
OUTLETCONFIGURATION	Outlet Configuration	Double		
SEATDIAMETER	Seat Diameter	Double		
MANUFACTURER	Manufacturer	Text	25	WS_HYD_MANUFACTURER
YEARMANUFACTURED	Manufacture Year	Text	25	
HASLOCK	Has Lock ?	Text	25	GIS_BOOLEAN_YES_NO
COLOR	Color	Text	25	WS_HYD_COLOR
GPS_DATE	GPS_DATE	Date		
GPS_TIME	GPS_TIME	Text	25	
LATITUDE	LATITUDE	Double		
LONGITUDE	LONGITUDE	Double		
ALTITUDE	ALTITUDE	Double		
HORIZONTAL_ACCURACY	HORIZONTAL_ACCURACY (m)	Double		
VERTICAL_ACCURACY	VERTICAL_ACCURACY (m)	Double		
GPS_COMMENT	GPS_COMMENT	Text	50	

WATER_MANHOLE				
Field Name	**Alias Name**	**Type**	**Length**	**Domain**
OBJECTID	OBJECTID	OID		
SHAPE	SHAPE	Geometry		
FEATUREOWNER	FEATUREOWNER	Text	20	WS_FEATUREOWNER
LIFECYCLESTATUS	LIFECYCLESTATUS	Text	20	WS_LIFECYCLESTATUS
SPATIALSOURCE	SPATIALSOURCE	Text	20	WS_SPATIALSOURCE_STD
ACCESSDIAMETER	ACCESSDIAMETER	Text	8	
ACCESSTYPE	ACCESSTYPE	Text	20	
GROUNDTYPE	GROUNDTYPE	Text	20	WS_SYSVAL_GROUNDTYPE
COVERMATERIAL	COVERMATERIAL	Text	10	
COVERTYPE	COVERTYPE	Text	8	
GPS_DATE	GPS_DATE	Date		
GPS_TIME	GPS_TIME	Text	10	
LATITUDE	LATITUDE	Double		
LONGITUDE	LONGITUDE	Double		
ALTITUDE	ALTITUDE	Double		
HORIZONTAL_ACCURACY	HORIZONTAL_ACCURACY (m)	Double		
VERTICAL_ACCURACY	VERTICAL_ACCURACY (m)	Double		
GPS_COMMENT	GPS_COMMENT	Text	30	

WATER_METER				
Field Name	**Alias Name**	**Type**	**Length**	**Domain**
OBJECTID	OBJECTID	OID		
SHAPE	SHAPE	Geometry		
FEATUREOWNER	Feature Owner	Text	20	GBA_WMSL_FEATUREOWNER
LIFECYCLESTATUS	Lifecycle Status	Text	25	GBA_WMSL_LIFECYCLESTATUS
SPATIALSOURCE	Spatial Source	Text	25	GBA_STATIC_SPATIALSOURCE
DIAMETER	DIAMETER	Double		WS_METER_DIAM
MANUFACTURER	Manufacturer	Text	25	WS_METER_MANUFACTURER
METERTYPE	Meter Type	Text	25	WS_METER_TYPE
GPS_DATE	GPS_DATE	Date		
GPS_TIME	GPS_TIME	Text	15	
LATITUDE	LATITUDE	Double		
LONGITUDE	LONGITUDE	Double		
ALTITUDE	ALTITUDE	Double		
HORIZONTAL_ACCURACY	HORIZONTAL_ACCURACY (m)	Double		
VERTICAL_ACCURACY	VERTICAL_ACCURACY (m)	Double		
GPS_COMMENT	GPS_COMMENT	Text	30	

WATER_SYSTEM_VALVE				
Field Name	**Alias Name**	**Type**	**Length**	**Domain**
OBJECTID	OBJECTID	OID		
SHAPE	SHAPE	Geometry		
FEATUREOWNER	FEATURE OWNER	Text	20	WS_SYSVAL_FEATUREOWNER
LIFECYCLESTATUS	LIFECYCLE STATUS	Text	20	WS_SYSVAL_LIFECYCLESTATUS
SPATIALSOURCE	SPATIAL SOURCE	Text	20	WS_SYSVAL_SPATIALSOURCE
TYPE	TYPE	Text	25	WS_SYSVAL_TYPE
VALVETYPE	VALVE TYPE	Text	10	WS_SYSVAL_VALVETYPE
FUNCTION	FUNCTION	Text	25	WS_SYSVAL_FUNCTION
GROUNDTYPE	GROUNDTYPE	Text	25	WS_SYSVAL_GROUNDTYPE
DIAMETER	Diameter	Text	8	WS_SYSVAL_DIAM
GPS_DATE	GPS DATE	Date		
GPS_TIME	GPS TIME	Text	10	
LATITUDE	LATITUDE	Double		
LONGITUDE	LONGITUDE	Double		
ALTITUDE	ALTITUDE	Double		
HORIZONTAL_ACCURACY	HORIZONTAL_ACCURACY (m)	Double		
VERTICAL_ACCURACY	VERTICAL_ACCURACY (m)	Double		
GPS_COMMENT	GPS COMMENT	Text	30	

Water Domains:

Domain name	WS_LIFECYCLESTATUS
ABANDONED	ABANDONED
ACTIVE	ACTIVE
FUTURE	FUTURE
INACTIVE	INACTIVE
REMOVED	REMOVED
UNKNOWN	UNKNOWN

Domain name	WS_SYSVAL_SPATIALSOURCE
APPROVED PLANS	APPROVED PLANS
ASBUILT	ASBUILT
DESIGN	DESIGN
GPS	GPS
HYDRMAINT	HYDRMAINT
ORTHOPHOTO	ORTHOPHOTO
TM7	TM7
UNKNOWN	UNKNOWN

Domain name	WS_HYD_MANUFACTURER
AMERICANDARLING	AMERICANDARLING
AVK	AVK
CLOW	CLOW
DRESSER	DRESSER
GREENBERG	GREENBERG
KENNEDY	KENNEDY
MUELLER	MUELLER
PACIFIC	PACIFIC
UNKNOWN	UNKNOWN
WATEROUS	WATEROUS

Domain name	WS_FEATUREOWNER
COC	Chandler
COG	Gilbert
COM	Mesa
COP	Phoenix
COT	Tempe
COUNTY	Maricopa County
GOULD	Gould
GRIC	GRIC
INTEL	Intel
MICROCHIP	Microchip
MOTOROLA	Motorola
PRIVATE	Private
SRP	SRP
SRVWUA	SRVWUA
UNKNOWN	UNKNOWN

Domain name	WS_SYSVAL_LIFECYCLESTATUS
FUTURE	FUTURE
UNKNOWN	UNKNOWN
INACTIVE	INACTIVE
ACTIVE	ACTIVE
REMOVED	REMOVED
ABANDONED	ABANDONED

Domain name	WS_FITTING_BEND
HORIZONTAL	HORIZONTAL
VERTICAL	VERTICAL

Domain name	WS_SYSVAL_DIAM
2	2
3	3
4	4
6	6
8	8
10	10
12	12
16	16
20	20
24	24
30	30
36	36
42	42
48	48
54	54

Domain name	WS_HYD_COLOR
0	YELLOW
1	BLACK/YELLOW
2	RED
3	UNKNOWN

Domain name	WS_FITTING_TYPE
11B	11B
22B	22B
45B	45B
90B	90B
COUPLING	COUPLING
CROSS	CROSS
ENDCAP	ENDCAP
LINESTOP	LINESTOP
OTHER	OTHER
REDUCER	REDUCER
SADDLE	SADDLE
TAPPING SLEEVE	TAPPING SLEEVE
TEE	TEE
UNKNOWN	UNKNOWN
WYE	WYE

Domain name	WS_SYSVAL_GROUNDTYPE
CONCRETE	CONCRETE
ASPHALT	ASPHALT
LANDSCAPE	LANDSCAPE
UNKNOWN	UNKNOWN

Domain name	WS_SPATIALSOURCE_STD
ASBUILT	ASBUILT
DESIGN	DESIGN
FIELD	FIELD
GPS	GPS
ORTHOPHOTO	ORTHOPHOTO
UNKNOWN	UNKNOWN

Domain name	WS_METER_DIAM
0.63	.63
0.75	.75
1	1
1.5	1.5
2	2
2.5	2.5
3	3
4	4
6	6
8	8
10	10

Domain name	WS_METER_MANUFACTURER
BADGER METERS	BADTER METERS
NEPTUNE METERS	NEPTUNE METERS
PRECISION METERS	PRECISION METERS
BADGER-NEPTUNE	BADGER-NEPTUNE
SENSUS	SENSUS

Domain name	WS_METER_TYPE
BYPASS	BYPASS
COMBO	COMBO
CMPND	CMPND
DISC	DISC
MAG	MAG
FDTEC	FDTEC
MLTJET	MLTJET
TURBIN	TURBIN
Ultrasonic	Ultrasonic

S

Domain name	WS_SYSVAL_FEATUREOWNER
COC	COC
PRIVATE	PRIVATE
COM	COM
MOTOROLA	MOTOROLA
INTEL	INTEL
UNKNOWN	UNKNOWN
TOG	TOG

Domain name	WS_FITTING_MATERIAL
DI	DI
PVC	PVC
BRASS	BRASS
STL	STL
COPPER	COPPER
AC	AC
CC	CC
CI	CI

Domain name	WS_SYSVAL_TYPE
STANDARD	STANDARD
BLOWOFF	BLOWOFF
ARV	ARV
AIR VACUUM	AIR VACUUM
PERMASEAL	PERMASEAL

Domain name	GBA_WMSI_LIFECYCLESTATUS
Operational	Operational
Empty	Empty
Out of Service	Out of Service
Abandoned	Abandoned

Domain name	WS_SYSVAL_FUNCTION
INLINE	INLINE
HYDRANT	HYDRANT
STUBOUT	STUBOUT
UNKNOWN	UNKNOWN
SERVICE	SERVICE
BYPASS	BYPASS
WPF	WPF
FDC	FDC
VAULT	VAULT
BACKFLOW	BACKFLOW
PUMPOUT	PUMPOUT
PUMPSTATION	PUMPSTATION
FIRELINE	FIRELINE
ARV	ARV
ZONE_SPLIT_VALVES	ZONE_SPLIT_VALVES

Domain name	GIS_BACKFLOW_FEATUREOWNER
COC	COC
PRIVATE	PRIVATE
CONTRACTOR	CONTRACTOR
INTEL	INTEL
OCA	OCA
OMG	OMG
TOG	TOG
UNKNOWN	UNKNOWN

Domain name	WS_SYSVAL_VALVETYPE
GATE	GATE
BUTTERFLY	BUTTERFLY
BALL	BALL
PLUG	PLUG
PIV	PIV
UNKNOWN	UNKNOWN
INSERTA	INSERTA

Domain name	GIS_BACKFLOW_MANUFACTURER
FEBCO	FEBCO
WATTS	WATTS
WILKINS	WILKINS
AMES	AMES
CONBRACO	SERVICE
HERSEY	HERSEY
RAIN BIRD	RAIN BIRD
APOLLO VALVES	APOLLO VALVES
METRON	METRON
OTHER	OTHER

Domain name	GIS_BACKFLOW_TYPE
Air Gap	Air Gap
Unknown	Unknown
Double Check Detector	Double Check Detector
Pressure Vacuum Breaker	Pressure Vacuum Breaker
Double Check	Double Check
Reduced Pressure Detector	Reduced Pressure Detector
Atmoshpheric Vacuum Breaker	Atmoshpheric Vacuum Breaker

DATA DICTIONARY: SEWER

SEWER CLEANOUT				
Field Name	**Alias Name**	**Type**	**Length**	**Domain**
OBJECTID	OBJECTID	OID		
SHAPE	SHAPE	Geometry		
FEATUREOWNER	FEATUREOWNER	Text	20	WW_FEATUREOWNER
LIFECYCLESTATUS	LIFECYCLESTATUS	Text	20	WW_LIFECYCLESTATUS
SPATIALSOURCE	SPATIALSOURCE	Text	20	WW_SPATIALSOURCE
RIM_ELEV	RIM_ELEV	Double		
INV_ELEV	INV_ELEV	Double		
GPS_DATE	GPS_DATE	Date		
GPS_TIME	GPS_TIME	Text	10	
LATITUDE	LATITUDE	Double		
LONGITUDE	LONGITUDE	Double		
ALTITUDE	ALTITUDE	Double		
HORIZONTAL_ACCURACY	HORIZONTAL_ACCURACY (m)	Double		
VERTICAL_ACCURACY	VERTICAL_ACCURACY (m)	Double		
GPS_COMMENT	GPS_COMMENT	Text	30	

SEWER CONTROL VALVE				
Field Name	**Alias Name**	**Type**	**Length**	**Domain**
OBJECTID	OBJECTID	OID		
SHAPE	SHAPE	Geometry		
FEATUREOWNER	FEATUREOWNER	Text	20	WW_FEATUREOWNER
LIFECYCLESTATUS	LIFECYCLESTATUS	Text	20	WW_LIFECYCLESTATUS
SPATIALSOURCE	SPATIALSOURCE	Text	20	WW_SPATIALSOURCE
TYPE	TYPE	Text	25	WW_CONTROL_VALVE_TYPE
DIAMETER	DIAMETER	Text	8	
GPS_DATE	GPS_DATE	Date		
GPS_TIME	GPS_TIME	Text	10	
LATITUDE	LATITUDE	Double		
LONGITUDE	LONGITUDE	Double		
ALTITUDE	ALTITUDE	Double		
HORIZONTAL_ACCURACY	HORIZONTAL_ACCURACY (m)	Double		
VERTICAL_ACCURACY	VERTICAL_ACCURACY (m)	Double		
GPS_COMMENT	GPS_COMMENT	Text	30	

SEWER_FITTING				
Field Name	**Alias Name**	**Type**	**Length**	**Domain**
OBJECTID	OBJECTID	OID		
SHAPE	SHAPE	Geometry		
FEATUREOWNER	FEATUREOWNER	Text	20	WW_FEATUREOWNER
LIFECYCLESTATUS	LIFECYCLESTATUS	Text	20	WW_LIFECYCLESTATUS
SPATIALSOURCE	SPATIALSOURCE	Text	20	WW_SPATIALSOURCE
MATERIAL	MATERIAL	Text	20	WW_FITTING_MATERIAL
TYPE	TYPE	Text	30	WW_FITTING_TYPE
BEND	BEND	Text	20	WW_FITTING_BEND
SIZE	SIZE	Text	20	
GPS_DATE	GPS_DATE	Date		
GPS_TIME	GPS_TIME	Text	10	
LATITUDE	LATITUDE	Double		
LONGITUDE	LONGITUDE	Double		
ALTITUDE	ALTITUDE	Double		
HORIZONTAL_ACCURACY	HORIZONTAL_ACCURACY (m)	Double		
VERTICAL_ACCURACY	VERTICAL_ACCURACY (m)	Double		
GPS_COMMENT	GPS_COMMENT	Text	30	

SEWER_MANHOLE				
Field Name	**Alias Name**	**Type**	**Length**	**Domain**
OBJECTID	OBJECTID	OID		
SHAPE	SHAPE	Geometry		
FEATUREOWNER	FEATUREOWNER	Text	25	WW_FEATUREOWNER
LIFECYCLESTATUS	LIFECYCLESTATUS	Text	25	WW_LIFECYCLESTATUS
SPATIALSOURCE	SPATIALSOURCE	Text	20	WW_SPATIALSOURCE
TYPE	TYPE	Text	20	WW_MH_TYPE
COVER_MATERIAL	COVER_MATERIAL	Text	25	WW_MH_COVER_MATERIAL
COVER_HOLE	COVER_HOLE	Text	25	WW_MH_COVER_HOLE
COVER_SIZE	COVER_SIZE	Text	20	WW_MH_COVER_SIZE
RIM_ELEV	RIM_ELEV	Double		
INV_ELEV	INV_ELEV	Double		
LINING	LINING	Text	255	WW_MH_LINER
WALL_MATERIAL	WALL_MATERIAL	Text	255	WW_MH_WALL_MATERIAL
GPS_DATE	GPS_DATE	Date		
GPS_TIME	GPS_TIME	Text	10	
LATITUDE	LATITUDE	Double		
LONGITUDE	LONGITUDE	Double		
ALTITUDE	ALTITUDE	Double		
HORIZONTAL_ACCURACY	HORIZONTAL_ACCURACY (m)	Double		
VERTICAL_ACCURACY	VERTICAL_ACCURACY (m)	Double		
GPS_COMMENT	GPS_COMMENT	Text	30	

Sewer Domains:

Domain name	WW_FEATUREOWNER
COC	COC
PRIVATE	PRIVATE
TOG	TOG
UNKNOWN	UNKNOWN

Domain name	WW_SPATIALSOURCE
GPS	GPS
ASBUILT	ASBUILT
UNKNOWN	UNKNOWN

Domain name	WW_MH_COVER_HOLE
UNKNOWN	UNKNOWN
SEALED	SEALED

Domain name	WW_MH_LINER
CAST-IN-PLACE	CAST-IN-PLACE
CEMENTITIOUS	CEMENTITIOUS
COMPOSITE	COMPOSITE
CURED-IN-PLACE	CURED-IN-PLACE
EPOXY	EPOXY
FR PLASTIC INSERT	FR PLASTIC INSERT
FR POLYMER INSERT	FR POLYMER INSERT
INSERT	INSERT
UNKNOWN	UNKNOWN

Domain name	WW_LIFECYCLESTATUS
ABANDONED	ABANDONED
ACTIVE	ACTIVE
INACTIVE	INACTIVE
PULLED	PULLED
UNKNOWN	UNKNOWN

Domain name	WW_MH_COVER_MATERIAL
ALUMINUM	ALUMINUM
CASTIRON	CASTIRON
HDPE COMPOSITE - CAP	HDPE COMPOSITE - CAP
HDPE COMPOSITE - EJ	HDPE COMPOSITE - EJ
HDPE COMPOSITE - HD20	HDPE COMPOSITE - HD20
STEEL	STEEL
UNKNOWN	UNKNOWN

Domain name	WW_MH_COVER_SIZE
0	Unknown
4	4
6	6
8	8
22	22
24	24
26	26
28	28
30	30
32	32
38	38
48	48
60	60

Domain name	WW_MH_WALL_MATERIAL
NONE	NONE
COMPOSITE	COMPOSITE
UNKNOWN	UNKNOWN
CONCRETE	CONCRETE
POURED	POURED
TLOCK	TLOCK
PRECAST	PRECAST
BRICK	BRICK

Domain name	WW_FITTING_MATERIAL
PVC	PVC
DIP	DIP
HDPE	HDPE
RCP	RCP
ACP	ACP
ABS	ABS
RUBBER	RUBBER
CONCRETE	CONCRETE
CLAY	CLAY
STEEL ENCASED VCP	STEEL ENCASED VCP
TLOCK LINE	TLOCK LINE
LINED RCP	LINED RCP
PVC LINED RCP	PVC LINED RCP
PVC LINED DIP	PVC LINED RCP

Domain name	WW_FITTING_BEND
HORIZONTAL	HORIZONTAL
VERTICAL	VERTICAL
NONE	NONE

Domain name	WW_MH_TYPE
0	UNKNOWN
1	SANITARY SEWER
2	ARV

Domain name	WW_FITTING_TYPE
TEE	TEE
WYE	WYE
90 BEND	90 BEND
45 BEND	45 BEND
22 BEND	22 BEND
11 BEND	11 BEND
ENCAP	ENCAP
PLUG	PLUG
REDUCER	REDUCER
ARV	ARV
FLOW METER	FLOW METER
NO FLOW POINT	NO FLOW POINT
OWNERSHIP CHANGE	OWNERSHIP CHANGE
OTHER	OTHER
UNKNOWN	UNKNOWN
COUPLING	COUPLING

Domain name	WW_CONTROL_VALVE_TYPE
AIRRELEASE	AIRRELEASE
AIRVACUUMRELEASE	AIRVACUUMRELEASE
PRESSURERELIEF	PRESSURERELIEF
VACUUMRELEASE	VACUUMRELEASE
UNKNOWN	UNKNOWN
N/A	N/A

DATA DICTIONARY: RECLAIM

RECLAIM_WATER_BACKFLOW				
Field Name	**Alias Name**	**Type**	**Length**	**Domain**
OBJECTID	OBJECTID	OID		
SHAPE	SHAPE	Geometry		
FEATUREOWNER	FEATUREOWNER	Text	25	GIS_BACKFLOW_FEATUREOWNER
LIFECYCLESTATUS	LIFECYCLESTATUS	Text	25	GIS_BACKFLOW_LIFECYCLESTATUS
SPATIALSOURCE	SPATIALSOURCE	Text	25	GIS_BACKFLOW_SPATIALSOURCE
SIZE	SIZE	Double		
TYPE	TYPE	Text	25	GIS_BACKFLOW_TYPE
MANUFACTURER	MANUFACTURER	Text	25	GIS_BACKFLOW_MANUFACTURER
GPS_DATE	GPS_DATE	Date		
GPS_TIME	GPS_TIME	Text	15	
LATITUDE	LATITUDE	Double		
LONGITUDE	LONGITUDE	Double		
ALTITUDE	ALTITUDE	Double		
HORIZONTAL_ACCURACY	HORIZONTAL_ACCURACY (m)	Double		
VERTICAL_ACCURACY	VERTICAL_ACCURACY (m)	Double		
GPS_COMMENT	GPS_COMMENT	Text	30	

RECLAIM_WATER_FITTING				
Field Name	**Alias Name**	**Type**	**Length**	**Domain**
OBJECTID	OBJECTID	OID		
SHAPE	SHAPE	Geometry		
FEATUREOWNER	FEATUREOWNER	Text	20	RWS_FEATUREOWNER
LIFECYCLESTATUS	LIFECYCLESTATUS	Text	20	RWS_LIFECYCLESTATUS
SPATIALSOURCE	SPATIALSOURCE	Text	20	RWS_SPATIALSOURCE
MATERIAL	MATERIAL	Text	20	RWS_MAIN_OR_SERVICE_MATERIAL
DIAMETER1	DIAMETER1	Text	8	RWS_FITTING_DIAMETER
DIAMETER2	DIAMETER2	Text	8	RWS_FITTING_DIAMETER
TYPE	TYPE	Text	30	RWS_FITTING_TYPE
BEND	BEND	Text	20	RWS_FITTING_BEND
GPS_DATE	GPS_DATE	Date		
GPS_TIME	GPS_TIME	Text	10	
LATITUDE	LATITUDE	Double		
LONGITUDE	LONGITUDE	Double		
ALTITUDE	ALTITUDE	Double		
HORIZONTAL_ACCURACY	HORIZONTAL_ACCURACY (m)	Double	8	
VERTICAL_ACCURACY	VERTICAL_ACCURACY (m)	Double	8	
GPS_COMMENT	GPS_COMMENT	Text	30	

RECLAIM_WATER_MANHOLE				
Field Name	**Alias Name**	**Type**	**Length**	**Domain**
OBJECTID	OBJECTID	OID		
SHAPE	SHAPE	Geometry		
FEATUREOWNER	FEATUREOWNER	Text	20	RWS_FEATUREOWNER
LIFECYCLESTATUS	LIFECYCLESTATUS	Text	20	RWS_LIFECYCLESTATUS
SPATIALSOURCE	SPATIALSOURCE	Text	20	RWS_SPATIALSOURCE
ACCESSDIAMETER	ACCESSDIAMETER	Text	8	
ACCESSTYPE	ACCESSTYPE	Text	20	
GROUNDTYPE	GROUNDTYPE	Text	20	RWS_GROUNDTYPE
COVERMATERIAL	COVERMATERIAL	Text	10	RWS_COVER_MATERIAL
COVERTYPE	COVERTYPE	Text	8	RWS_COVER_TYPE
GPS_DATE	GPS_DATE	Date		
GPS_TIME	GPS_TIME	Text	10	
LATITUDE	LATITUDE	Double		
LONGITUDE	LONGITUDE	Double		
ALTITUDE	ALTITUDE	Double		
HORIZONTAL_ACCURACY	HORIZONTAL_ACCURACY (m)	Double		
VERTICAL_ACCURACY	VERTICAL_ACCURACY (m)	Double		
GPS_COMMENT	GPS_COMMENT	Text	30	

RECLAIM_WATER_METER				
Field Name	**Alias Name**	**Type**	**Length**	**Domain**
OBJECTID	OBJECTID	OID		
SHAPE	SHAPE	Geometry		
FEATUREOWNER	Feature Owner	Text	20	GBA_WMSL_FEATUREOWNER
LIFECYCLESTATUS	Lifecycle Status	Text	25	GBA_WMSL_LIFECYCLESTATUS
SPATIALSOURCE	Spatial Source	Text	25	GBA_STATIC_SPATIALSOURCE
DIAMETER	DIAMETER	Double		RWS_METER_DIAM
MANUFACTURER	Manufacturer	Text	25	RWS_METER_MANUFACTURER
METERTYPE	Meter Type	Text	25	RWS_METERTYPE
GPS_DATE	GPS_DATE	Date		
GPS_TIME	GPS_TIME	Text	15	
LATITUDE	LATITUDE	Double		
LONGITUDE	LONGITUDE	Double		
ALTITUDE	ALTITUDE	Double		
HORIZONTAL_ACCURACY	HORIZONTAL_ACCURACY (m)	Double		
VERTICAL_ACCURACY	VERTICAL_ACCURACY (m)	Double		
GPS_COMMENT	GPS_COMMENT	Text	30	

RECLAIM WATER SYSTEM VALVE				
Field Name	**Alias Name**	**Type**	**Length**	**Domain**
OBJECTID	OBJECTID	OID		
SHAPE	SHAPE	Geometry		
FEATUREOWNER	FEATURE OWNER	Text	20	RWS_FEATUREOWNER
LIFECYCLESTATUS	LIFECYCLE STATUS	Text	20	RWS_LIFECYCLESTATUS
SPATIALSOURCE	SPATIAL SOURCE	Text	20	RWS_SPATIALSOURCE
TYPE	TYPE	Text	25	RWS_SYSVAL_TYPE
VALVETYPE	VALVE TYPE	Text	10	RWS_SYSVAL_VALVETYPE
FUNCTION	FUNCTION	Text	25	RWS_SYSVAL_FUNCTION
GROUNDTYPE	GROUNDTYPE	Text	25	RWS_SYSVAL_GROUNDTYPE
DIAMETER	DIAMETER	Double		RWS_SYSVAL_DIAM
GPS_DATE	GPS DATE	Date	8	
GPS_TIME	GPS TIME	Text	10	
LATITUDE	LATITUDE	Double		
LONGITUDE	LONGITUDE	Double		
ALTITUDE	ALTITUDE	Double		
HORIZONTAL_ACCURACY	HORIZONTAL_ACCURACY (m)	Double		
VERTICAL_ACCURACY	VERTICAL_ACCURACY (m)	Double		
GPS_COMMENT	GPS COMMENT	Text	30	

Reclaim Water Domains:

Domain name	RWS_SYSVAL_VALVETYPE
BALL	BALL
BUTTERFLY	BUTTERFLY
GATE	GATE
INSERTA	INSERTA
PIV	PIV
PLUG	PLUG
UNKNOWN	UNKNOWN

Domain name	RWS_SYSVAL_FUNCTION
ARV	ARV
INLINE	INLINE
PUMPOUT	PUMPOUT
PUMPSTATION	PUMPSTATION
SERVICE	SERVICE
STUBOUT	STUBOUT
UNKNOWN	UNKNOWN
VAULT	VAULT

Domain name	RWS_SYSVAL_TYPE
ARV	ARV
AIR VACUUM	AIR VACUUM
BLOWOFF	BLOWOFF
PERMASEAL	PERMASEAL
STANDARD	STANDARD

Domain name	RWS_FITTING_BEND
HORIZONTAL	HORIZONTAL
VERTICAL	VERTICAL

Domain name	RWS_MAIN_OR_SERVICE_MATERIAL
AC	AC
CC	CC
CI	CI
CU	COPPER
DI	DI
PVC	PVC
UNKNOWN	UNKNOWN
AC	AC
CC	CC

Domain name	RWS_FITTING_TYPE
11B	11B
22B	22B
45B	45B
90B	90B
COUPLING	COUPLING
CROSS	CROSS
ENDCAP	ENDCAP
LINESTOP	LINESTOP
MECHANICAL JOINT	MECHANICAL JOINT
OTHER	OTHER
RECHARGE WELL	RECHARGE WELL
REDUCER	REDUCER
SADDLE	SADDLE
TAPPING SLEEVE	TAPPING SLEEVE
TEE	TEE
UNKNOWN	UNKNOWN
WYE	WYE

Domain name	RWS_SPATIALSOURCE
ASBUILT	ASBUILT
FIELD	FIELD
GPS	GPS
ORTHOPHOTO	ORTHOPHOTO
UNKNOWN	UNKNOWN

Domain name	RWS_LIFECYCLESTATUS
ABANDONED	ABANDONED
ACTIVE	ACTIVE
INACTIVE	INACTIVE
REMOVED	REMOVED
UNKNOWN	UNKNOWN

Domain name	RWS_SYSVAL_DIAM
1.5	1.5
2	2
3	3
4	4
6	6
8	8
10	10
12	12
16	16
20	20
24	24
30	30
36	36
42	42
48	48
9999	UNKNOWN

Domain name	RWS_GROUNDTYPE
ASPHALT	ASPHALT
CONCRETE	CONCRETE
DIRT	DIRT
UNKNOWN	UNKNOWN

Domain name	RWS_SYSVAL_GROUNDTYPE
ASPHALT	ASPHALT
CONCRETE	CONCRETE
LANDSCAPE	LANDSCAPE
UNKNOWN	UNKNOWN

Domain name	RWS_FITTING_DIAMETER
0.63	0.63
0.75	0.75
1	1
1.25	1.25
1.5	1.5
2	2
2.5	2.5
3	3
4	4
6	6
8	8
10	10
12	12
15	15
16	16
18	18
20	20
24	24
30	30

Domain name	RWS_COVER_MATERIAL
CAST IRON	CAST IRON
ALUMINUM	ALUMINUM
UNKNOWN	UNKNOWN

Domain name	RWS_COVER_TYPE
SEALED	SEALED
VENTED	VENTED
BOLTED	BOLTED
UNKNOWN	UNKNOWN

Domain name	RWS_METER_MANUFACTURER
BADGER METERS	BADGER METERS
NEPTUNE METERS	NEPTUNE METERS
PRECISION METERS	PRECISION METERS
BADGER-NEPTUNE	BADGER-NEPTUNE
SENSUS	SENSUS

Domain name	RWS_METERTYPE
BYPASS	BYPASS
COMBO	COMBO
CMPND	CMPND
DISC	DISC
MAG	MAG
FDTEC	FDTEC
MLTJET	MLTJET
TURBIN	TURBIN

Domain name	RWS_METER_DIAM
0.63	.63
0.75	.75
1	1
1.5	1.5
2	2
2.5	2.5
3	3
4	4
6	6
8	8
10	10

Domain name	RWS_FEATUREOWNER
COC	CHANDLER
COM	MESA
INTEL	INTEL
OCA	OCA
OMG	OMG
PRIVATE	PRIVATE
SRP	SRP
TOG	GILBERT
UNKNOWN	UNKNOWN

DATA DICTIONARY: STORM

STORM_BUBBLER_BOX				
Field Name	**Alias Name**	**Type**	**Length**	**Domain**
OBJECTID	OBJECTID	OID		
SHAPE	SHAPE	Geometry		
FEATUREOWNER	FEATUREOWNER	Text	25	SWS_FEATUREOWNER
LIFECYCLESTATUS	LIFECYCLESTATUS	Text	25	SWS_LIFECYCLESTATUS
SPATIALSOURCE	SPATIALSOURCE	Text	25	SWS_SPATIALSOURCE
GRATE_OPENINGS_NUM	GRATE_OPENINGS_NUM	Short		SWS_GRATE_OPENINGS
GRATE_LENGTH	GRATE_LENGTH	Double	8	SWS_GRATE_LENGTH
GRATE_WIDTH	GRATE_WIDTH	Double	8	SWS_GRATE_WIDTH
DRYWELL_ASSOC	DRYWELL_ASSOC	Text	5	GIS_BOOLEAN_YES_NO
GPS_DATE	GPS_DATE	Date		
GPS_TIME	GPS_TIME	Text	10	
LATITUDE	LATITUDE	Double		
LONGITUDE	LONGITUDE	Double		
ALTITUDE	ALTITUDE	Double		
HORIZONTAL_ACCURACY	HORIZONTAL_ACCURACY (m)	Double		
VERTICAL_ACCURACY	VERTICAL_ACCURACY (m)	Double		
GPS_COMMENT	GPS_COMMENT	Text	50	

STORM_CATCHBASIN				
Field Name	**Alias Name**	**Type**	**Length**	**Domain**
OBJECTID	OBJECTID	OID		
SHAPE	SHAPE	Geometry		
FEATUREOWNER	FEATUREOWNER	Text	25	SWS_FEATUREOWNER
LIFECYCLESTATUS	LIFECYCLESTATUS	Text	25	SWS_LIFECYCLESTATUS
SPATIALSOURCE	SPATIALSOURCE	Text	25	SWS_SPATIALSOURCE
STRUCTURE_TYPE	STRUCTURE_TYPE	Short		SWS_STRUCTURE_TYPE
CATCHBASIN_TYPE	CATCHBASIN_TYPE	Text	25	SWS_CB_TYPE
CITY_EMBLEM	CITY_EMBLEM	Text	5	GIS_BOOLEAN_YES_NO
ACCESS_OPENING_TYPE	ACCESS_OPENING_TYPE	Text	25	SWS_CB_ACCESS_OPENING_TYPE
GRATE_LENGTH	GRATE_LENGTH	Double		SWS_GRATE_LENGTH
GRATE_WIDTH	GRATE_WIDTH	Double		SWS_GRATE_WIDTH
LID	LID	Text	5	GIS_BOOLEAN_YES_NO
LID_TYPE	LID_TYPE	Text	25	SWS_CB_LID_TYPE
DRYWELL_CONN	DRYWELL_CONN	Text	5	GIS_BOOLEAN_YES_NO
OUTLET_CONN	OUTLET_CONN	Text	5	GIS_BOOLEAN_YES_NO
BUBBLERBOX_CONN	BUBBLERBOX_CONN	Text	5	GIS_BOOLEAN_YES_NO
BUBBLERBOX_DRYWELL_ASSOC	BUBBLERBOX_DRYWELL_ASSOC	Text	5	GIS_BOOLEAN_YES_NO
LAKE_DRAIN	LAKE_DRAIN	Text	5	GIS_BOOLEAN_YES_NO
GPS_DATE	GPS_DATE	Date		
GPS_TIME	GPS_TIME	Text	10	
LATITUDE	LATITUDE	Double		
LONGITUDE	LONGITUDE	Double		
ALTITUDE	ALTITUDE	Double		
HORIZONTAL_ACCURACY	HORIZONTAL_ACCURACY (m)	Double		
VERTICAL_ACCURACY	VERTICAL_ACCURACY (m)	Double		
GPS_COMMENT	GPS_COMMENT	Text	50	

STORM_COLLECTION_VAULT				
Field Name	**Alias Name**	**Type**	**Length**	**Domain**
OBJECTID	OBJECTID	OID		
SHAPE	SHAPE	Geometry		
FEATUREOWNER	FEATUREOWNER	Text	20	SWS_FEATUREOWNER
LIFECYCLESTATUS	LIFECYCLESTATUS	Text	20	SWS_LIFECYCLESTATUS
SPATIALSOURCE	SPATIALSOURCE	Text	20	SWS_SPATIALSOURCE
INLET_NUM	INLET_NUM	Short		SWS_CV_NUMB_INLETS
INLET_DIAM	INLET_DIAM	Short		SWS_CV_PIPE_SIZE
INLET_PIPE_TYPE	INLET_PIPE_TYPE	Text	30	SWS_CV_PIPE_TYPE
NUISANCE_LINE_ASSOC	NUISANCE_LINE_ASSOC	Text	5	GIS_BOOLEAN_YES_NO
DRYWELL_ASSOC	DRYWELL_ASSOC	Text	5	GIS_BOOLEAN_YES_NO
LID_GRATE	LID_GRATE	Text	5	SWS_LID_GRATE
GPS_DATE	GPS_DATE	Date		
GPS_TIME	GPS_TIME	Text	10	
LATITUDE	LATITUDE	Double		
LONGITUDE	LONGITUDE	Double		
ALTITUDE	ALTITUDE	Double		
HORIZONTAL_ACCURACY	HORIZONTAL_ACCURACY (m)	Double		
VERTICAL_ACCURACY	VERTICAL_ACCURACY (m)	Double		
GPS_COMMENT	GPS_COMMENT	Text	50	

STORM_DRAIN_MANHOLE				
Field Name	**Alias Name**	**Type**	**Length**	**Domain**
OBJECTID	OBJECTID	OID		
SHAPE	SHAPE	Geometry		
FEATUREOWNER	FEATUREOWNER	Text	25	SWS_FEATUREOWNER
LIFECYCLESTATUS	LIFECYCLESTATUS	Text	25	SWS_LIFECYCLESTATUS
SPATIALSOURCE	SPATIALSOURCE	Text	25	SWS_SPATIALSOURCE
STRUCTURE_TYPE	STRUCTURE_TYPE	Short	2	SWS_STRUCTURE_TYPE
CHANDLER_NAME	CHANDLER_NAME_ON_LID	Text	5	GIS_BOOLEAN_YES_NO
DIAMETER	DIAMETER	Short	2	SWS_SDMH_SIZE
VENT_HOLE	VENT_HOLE	Text	30	GIS_BOOLEAN_YES_NO
ACCESS_OPENING_TYPE	ACCESS_OPENING_TYPE	Text	25	SWS_SDMH_ACCESS_OPENING_TYPE
LID_TYPE	LID_TYPE	Text	30	SWS_SDMH_TYPE
LID_TEXT	LID_TEXT	Text	30	SWS_SDMH_LID_TEXT
GPS_DATE	GPS_DATE	Date		
GPS_TIME	GPS_TIME	Text	10	
LATITUDE	LATITUDE	Double		
LONGITUDE	LONGITUDE	Double		
ALTITUDE	ALTITUDE	Double		
HORIZONTAL_ACCURACY	HORIZONTAL_ACCURACY (m)	Double		
VERTICAL_ACCURACY	VERTICAL_ACCURACY (m)	Double		
GPS_COMMENT	GPS_COMMENT	Text	50	

STORM_DRYWELL				
Field Name	**Alias Name**	**Type**	**Length**	**Domain**
OBJECTID	OBJECTID	OID		
SHAPE	SHAPE	Geometry		
FEATUREOWNER	FEATUREOWNER	Text	25	SWS_FEATUREOWNER
LIFECYCLESTATUS	LIFECYCLESTATUS	Text	25	SWS_LIFECYCLESTATUS
SPATIALSOURCE	SPATIALSOURCE	Text	25	SWS_SPATIALSOURCE
FIELD_LOC	FIELD_LOC	Text	100	SWS_DW_LOCATION
INSTALLER	INSTALLER	Text	30	SWS_DW_INSTALLER
CHAMBER_TYPE	CHAMBER_TYPE	Text	30	SWS_DW_CHAMBER_TYPE
LID_SIZE	LID_SIZE	Short		SWS_DW_LID_SIZE
LID_TYPE	LID_TYPE	Text	25	SWS_DW_LID_TYPE
NUISANCE_LINE_ASSOC	NUISANCE_LINE_ASSOC	Text	5	GIS_BOOLEAN_YES_NO
CONCRETE_PAD	CONCRETE_PAD	Text	5	GIS_BOOLEAN_YES_NO
GPS_DATE	GPS_DATE	Date		
GPS_TIME	GPS_TIME	Text	10	
LATITUDE	LATITUDE	Double		
LONGITUDE	LONGITUDE	Double		
ALTITUDE	ALTITUDE	Double		
HORIZONTAL_ACCURACY	HORIZONTAL_ACCURACY (m)	Double		
VERTICAL_ACCURACY	VERTICAL_ACCURACY (m)	Double		
GPS_COMMENT	GPS_COMMENT	Text	50	

STORM_INLET				
Field Name	**Alias Name**	**Type**	**Length**	**Domain**
OBJECTID	OBJECTID	OID		
SHAPE	SHAPE	Geometry		
FEATUREOWNER	FEATUREOWNER	Text	25	SWS_FEATUREOWNER
LIFECYCLESTATUS	LIFECYCLESTATUS	Text	25	SWS_LIFECYCLESTATUS
SPATIALSOURCE	SPATIALSOURCE	Text	25	SWS_SPATIALSOURCE
CATCHBASIN_TYPE	CATCHBASIN_TYPE	Text	25	SWS_CB_TYPE
FIELD_LOC	FIELD_LOC	Text	100	SWS_FIELD_LOC
GRATE_ASSOC	GRATE_ASSOC	Text	25	GIS_BOOLEAN_YES_NO
GRATE_LENGTH	GRATE_LENGTH	Double		SWS_GRATE_LENGTH
GRATE_WIDTH	GRATE_WIDTH	Double		SWS_GRATE_WIDTH
INLET_PIPE_DIAM	INLET_PIPE_DIAM	Short		SWS_INLET_PIPE_DIAM
INLET_NUMBER	NUMBER_OF_INLETS	Short		SWS_INLET_NUMBER
TRASHRACK_ASSOC	TRASHRACK_ASSOC	Text	5	GIS_BOOLEAN_YES_NO
TRASH_LENGTH	TRASH_LENGTH	Double		
TRASH_WIDTH	TRASH_WIDTH	Double		
NUISANCE_LINE_ASSOC	NUISANCE_LINE_ASSOC	Text	5	GIS_BOOLEAN_YES_NO
BUBBLER_BOX_DRYWELL_ASSOC	BUBBLER_BOX_DRYWELL_ASSOC	Text	5	GIS_BOOLEAN_YES_NO
HEADWALLASSOC	HEADWALLASSOC	Text	5	GIS_BOOLEAN_YES_NO
GPS_DATE	GPS_DATE	Date		
GPS_TIME	GPS_TIME	Text	10	
LATITUDE	LATITUDE	Double		
LONGITUDE	LONGITUDE	Double		
ALTITUDE	ALTITUDE	Double		
HORIZONTAL_ACCURACY	HORIZONTAL_ACCURACY (m)	Double		
VERTICAL_ACCURACY	VERTICAL_ACCURACY (m)	Double		
GPS_COMMENT	GPS_COMMENT	Text	50	

STORM_OUTLET				
Field Name	**Alias Name**	**Type**	**Length**	**Domain**
OBJECTID	OBJECTID	OID		
SHAPE	SHAPE	Geometry		
FEATUREOWNER	FEATUREOWNER	Text	25	SWS_FEATUREOWNER
LIFECYCLESTATUS	LIFECYCLESTATUS	Text	25	SWS_LIFECYCLESTATUS
SPATIALSOURCE	SPATIALSOURCE	Text	25	SWS_SPATIALSOURCE
GRATE_ASSOC	GRATE_ASSOC	Text	25	GIS_BOOLEAN_YES_NO
GRATE_LENGTH	GRATE_LENGTH	Double		SWS_GRATE_LENGTH
GRATE_WIDTH	GRATE_WIDTH	Double		SWS_GRATE_WIDTH
INLET_PIPE_DIAM	INLET_PIPE_DIAM	Short		SWS_INLET_PIPE_DIAM
INLET_NUMBER	NUMBER_OF_INLETS	Short		SWS_INLET_NUMBER
TRASHRACK_ASSOC	TRASHRACK_ASSOC	Text	5	GIS_BOOLEAN_YES_NO
TRASH_LENGTH	TRASH_LENGTH	Double		
TRASH_WIDTH	TRASH_WIDTH	Double		
NUISANCE_LINE_ASSOC	NUISANCE_LINE_ASSOC	Text	5	GIS_BOOLEAN_YES_NO
BUBBLER_BOX_DRYWELL_ASSOC	BUBBLER_BOX_DRYWELL_ASSOC	Text	5	GIS_BOOLEAN_YES_NO
HEADWALLASSOC	HEADWALLASSOC	Text	5	GIS_BOOLEAN_YES_NO
GPS_DATE	GPS_DATE	Date		
GPS_TIME	GPS_TIME	Text	10	
LATITUDE	LATITUDE	Double		
LONGITUDE	LONGITUDE	Double		
ALTITUDE	ALTITUDE	Double		
HORIZONTAL_ACCURACY	HORIZONTAL_ACCURACY (m)	Double		
VERTICAL_ACCURACY	VERTICAL_ACCURACY (m)	Double		
GPS_COMMENT	GPS_COMMENT	Text	50	

STORM_SCUPPER				
Field Name	**Alias Name**	**Type**	**Length**	**Domain**
OBJECTID	OBJECTID	OID		
SHAPE	SHAPE	Geometry		
FEATUREOWNER	FEATUREOWNER	Text	25	SWS_FEATUREOWNER
LIFECYCLESTATUS	LIFECYCLESTATUS	Text	25	SWS_LIFECYCLESTATUS
SPATIALSOURCE	SPATIALSOURCE	Text	25	SWS_SPATIALSOURCE
CITY_EMBLEM	CITY_EMBLEM	Text	5	GIS_BOOLEAN_YES_NO
NUMBER_OPENINGS	NUMBER_OPENINGS	Short		
WIDTH	WIDTH	Double		
SPILLWAY_ASSOC	SPILLWAY_ASSOC	Text	25	GIS_BOOLEAN_YES_NO
HEADWALL_ASSOC	HEADWALL_ASSOC	Text	5	GIS_BOOLEAN_YES_NO
NUISANCE_LINE_ASSOC	NUISANCE_LINE_ASSOC	Text	5	GIS_BOOLEAN_YES_NO
BUBBLERBOX_ASSOC	BUBBLERBOX_ASSOC	Text	5	GIS_BOOLEAN_YES_NO
BUBBLER_BOX_DRYWELL_ASSOC	BUBBLER_BOX_DRYWELL_ASSOC	Text	5	GIS_BOOLEAN_YES_NO
LAKE_DRAIN	LAKE_DRAIN	Text	5	GIS_BOOLEAN_YES_NO
RIPRAP	RIPRAP	Text	25	GIS_BOOLEAN_YES_NO
GPS_DATE	GPS_DATE	Date		
GPS_TIME	GPS_TIME	Text	10	
LATITUDE	LATITUDE	Double		
LONGITUDE	LONGITUDE	Double		
ALTITUDE	ALTITUDE	Double		
HORIZONTAL_ACCURACY	HORIZONTAL_ACCURACY (m)	Double		
VERTICAL_ACCURACY	VERTICAL_ACCURACY (m)	Double		
GPS_COMMENT	GPS_COMMENT	Text	50	

Storm Domains:

Domain name	SWS_DW_LOCATION
AIRPORT	AIRPORT
CITYRETENTION	CITY RETENTION
PARK	PARK
PARKING_LOT	PARKING LOT
PRIVATERETENTION	PRIVATE RETENTION
STREET	STREET
WELL_SITE	WELL SITE

Domain name	SWS_GRATE_LENGTH
12	12
24	24
28	28
30	30
36	36
38	38
40	40
50	50
60	60
76	76

Domain name	SWS_CB_LID_TYPE
STEEL	STEEL
CONCRETE	CONCRETE

Domain name	SWS_DW_CHAMBER_TYPE
DOUBLE	DOUBLE
SINGLE	SINGLE
TRIPLE	TRIPLE

Domain name	SWS_LIFECYCLESTATUS
ACTIVE	ACTIVE
REMOVED	REMOVED
ABANDONED	ABANDONED
INACTIVE	INACTIVE
FUTURE	FUTURE

Domain name	SWS_GRATE_OPENINGS
1	1
2	2
3	3
4	4
5	5
6	6

Domain name	SWS_SPATIALSOURCE
APPROVED_PLANS	APPROVED_PLANS
ASBUILT	ASBUILT
DESIGN	DESIGN
FIELD	FIELD
GPS	GPS
ORTHOPHOTO	ORTHOPHOTO
UNKNOWN	UNKNOWN

Domain name	SWS_SDMH_SIZE
22	22
24	24
26	26
28	28
30	30
32	32
38	38

Domain name	SWS_DW_LID_SIZE
22	22
24	24
25	25
26	26
32	32
38	38

Domain name	SWS_STRUCTURE_TYPE
1	CATCH BASIN
2	SCUPPER
3	DRYWELL
4	MANHOLE
5	OUTLET
6	INLET
7	BUBBLERBOX
8	SPILLWAY
9	SEPARATOR

Domain name	SWS_SDMH_LID_TEXT
CHANDLER_SANITATION_SEWER	CHANDLER SANITATION SEWER
CHANDLER_STORM/SEWER	CHANDLER STORM/SEWER
NONE	NONE
OTHER	OTHER
STORM SEWER	STORM SEWER

Domain name	SWS_DW_INSTALLER
McGUCKINDRILLING	McGUCKIN DRILLING
TORRENTRESOURCES	TORRENT RESOURCES
WACODRILLING	WACO DRILLING
OTHER	OTHER

Domain name	SWS_CB_ACCESS_OPENING_TYPE
NONE	NONE
RECTANGULAR	RECTANGULAR
ROUND	ROUND
SQUARE	SQUARE

Domain name	SWS_FEATUREOWNER
ADOT	ADOT
CITY_OF_CHANDLER	CITY_OF_CHANDLER
HOA	HOA
OTHER	OTHER

Domain name	SWS_GRATE_WIDTH
6	6
12	12
16	16
18	18
24	24
28	28
30	30
36	36
38	38
44	44
72	72

Domain name	SWS_SDMH_ACCESS_OPENING_TYPE
NONE	NONE
RECTANGULAR	RECTANGULAR
ROUND	ROUND
SQUARE	SQUARE

Domain name	SWS_FIELD_LOC
PARK	PARK
WELLSI	WELL_SITE
PRKLOT	PARKING_LOT
STREET	STREET
AIRPOR	AIRPORT
CTYRTN	CITYRETENTION
PVRET	PRIVATERETENTION

Domain name	SWS_SDMH_TYPE
PRESSURIZED	PRESSURIZED
NON-PRESSURIZED	NON-PRESSURIZED

Domain name	SWS_DW_LID_TYPE
STEEL	STEEL
GRANITE	GRANITE
CONCRETE_SEALED	CONCRETE_SEALED
GRATE	GRATE

Domain name	SWS_INLET_PIPE_DIAM
12	12
13	13
14	14
15	15
16	16
18	18
24	24
26	26
30	30
36	36
42	42
46	46
60	60
72	72

Domain name	SWS_INLET_NUMBER
1	1
2	2
3	3
4	4

Domain name	SWS_CB_TYPE
TYPE_A	TYPE_A
TYPE_B	TYPE_B
TYPE_C	TYPE_C
TYPE_D	TYPE_D
TYPE_E	TYPE_E
TYPE_F	TYPE_F
TYPE_G	TYPE_G
TYPE_H	TYPE_H
TYPE_Q	TYPE_Q
NONE	NONE

Domain name	SWS_LID_GRATE
LID	LID
GRATE	GRATE

Domain name	SWS_CV_PIPE_TYPE
CONCRETE	CONCRETE
OTHER	OTHER
METAL	METAL

Domain name	SWS_CV_PIPE_SIZE
12	12
14	14
16	16
18	18
20	20
24	24
30	30
36	36

DATA DICTIONARY: MISCELLANEOUS POINTS

MISCELLANEOUS POINT				
Field Name	**Alias Name**	**Type**	**Length**	**Domain**
OBJECTID	OBJECTID	OID		
SHAPE	SHAPE	Geometry		
SIZE	SIZE	Double		
MATERIAL	MATERIAL	Text	30	
UTILITY_TYPE	UTILITY_TYPE	Text	30	PW_UTILITY_TYPE
NOTES	NOTES	Text	150	
GPS_DATE	GPS_DATE	Date		
GPS_TIME	GPS_TIME	Text	10	
LATITUDE	LATITUDE	Double		
LONGITUDE	LONGITUDE	Double		
ALTITUDE	ALTITUDE	Double		
HORIZONTAL_ACCURACY	HORIZONTAL_ACCURACY (m)	Double		
VERTICAL_ACCURACY	VERTICAL_ACCURACY (m)	Double		
GPS_COMMENT	GPS_COMMENT	Text	50	

Domains:

Domain name	PW_UTILITY_TYPE
WATER	WATER
WASTEWATER	WASTEWATER
RECLAIM	RECLAIM
STORM	STORM
OTHER	OTHER

DATA DICTIONARY: STREETLIGHTS

STREETLIGHTS				
Field Name	**Alias Name**	**Type**	**Length**	**Domain**
OBJECTID	OBJECTID	OID		
SHAPE	SHAPE	Geometry		
FEATUREOWNER	POLE_OWNER	Text	10	ST_STLITINV_FEATUREOWNER
SPATIALSOURCE	SPATIALSOURCE	Text	25	GBA_STATIC_SPATIALSOURCE
POLENUMBER	POLENUMBER	Text	10	
POLE_HEIGHT	POLE_HEIGHT	Short		
POLE_TYPE	POLE_TYPE	Text	30	TE_STLITINV_POLE_TYPE
POLE_COAT	POLE_COAT	Text	30	TE_STLITINV_POLE_COAT
FOUNDATION	FOUNDATION	Text	30	GIS_BOOLEAN_YES_NO
GPS_DATE	GPS_DATE	Date		
GPS_TIME	GPS_TIME	Text	10	
LATITUDE	LATITUDE	Double		
LONGITUDE	LONGITUDE	Double		
ALTITUDE	ALTITUDE	Double		
HORIZONTAL_ACCURACY	HORIZONTAL_ACCURACY (m)	Double		
VERTICAL_ACCURACY	VERTICAL_ACCURACY (m)	Double		
GPS_COMMENT	GPS_COMMENT	Text	255	

Streetlights Domains:

Domain name	ST_STLITINV_FEATUREOWNER
COC	CITY OF CHANDLER
PRIVATE	PRIVATE
SRP	SRP
AP	APS

Domain name	GBA_STATIC_SPATIALSOURCE
GPS	GPS
ORTHOPHOTO	ORTHOPHOTO
APPROVED_PLANS	APPROVED_PLANS
GEOCODED	GEOCODED
UNKNOWN	UNKNOWN

Domain name	TE_STLITINV_POLE_TYPE
SL 1	SL 1
SL 6	SL 6
SL 8	SL 8
SL 10	SL 10
SL 16	SL 16
SL 17	SL 17
CURVED	CURVED
CUSTOM	CUSTOM
STERNBERG	STERNBERG
SIGNAL POLE	SIGNAL POLE
POWER POLE	POWER POLE

Domain name	TE_STLITINV_POLE_COAT
GALVANIZED	GALVANIZED
PAINTED	PAINTED
POWDER COATED	POWDER COATED

EXHIBIT G

SUBCONTRACTOR DOCUMENTS WITH CM@RISK

Any subcontractor assumptions, clarifications, exclusions, terms & conditions, signature blocks, etc. included are strictly between the CM@Risk and their subcontractors, and do not apply to the Agreement between the CM@Risk and the City.

DRM ABC QUOTE SELECTED AS LOWEST BIDDER

DESERT READY MIX

READY MIX CONCRETE SALES AND SERVICE
4011 PRESIDO STREET
MESA, AZ 85215
OFFICE: 480-428-2280 FAX: 480-985-4248

Begin Date:	February 19, 2025	Quote # :	25967
Expiration Date:	December 31, 2025	MAP/GRID	

Customer: **B & F CONTRACTING INC**
Customer Code: BFCO001
Address: 11011 N 23RD AVE
PHOENIX, AZ 85029
Contact: NANCY A/P
Phone: 623-582-1170 O
Fax:
Project: **CITY OF CHANDLER CMAR 66-INCH REDUNDANT**
Job Address: PRICE ROAD & LOOP 202
Terms Description: **2% 10TH NET 30**

Item Code	Item Description	Est. Qty	Price
S500501	PHCLSM.5 (1/2 SK SLURRY COP)	5,400	$108.00
SRP104	1/2SK MAG CLSM		$108.00
TC	TEMPERATURE CONTROL		$1.00
A203001	MAG A 3000 PSI W/ASH	60	$140.00
A204001	MAG AA 4000 PSI W/ASH	22	$148.00
G402061	2000 PSI GROUT	210	$165.00
AG010003 DELIVERED	MAG SPEC ABC (NON-LIME)	15,000	$20.00
AG020003 DELIVERED	CONCRETE SAND	200	$25.00
AG040002 DELIVERED	3/8 REJECT BEDDING CHIPS ***IF AVAILABLE***	1,000	$18.00
AG040001 DELIVERED	#8 (3/8 CONCRETE ROCK)		$23.25

Ready Mix Additional Fees

Fee ID *	UOM	Price
E01	cy	3.25
FSC	LOAD	TBD

Ready Mix Minimum Load Fee

Less than or equal to	UOM	Price
2	Load	0
3.5	Load	0
5.5	Load	0

- Normal operating hours are Mon-Fri, Sat, Sun or Holidays are subject to surcharges.
- Color added at no expressed guarantee.
- Drivers do not accept cash or make change.
- Desert Ready Mix reserves the right to increase prices due to RAW Material cost increases such as Cement, Fly Ash, Aggregates or unexpected Fuel increases.
- All specialized aggregate sales are based on availability.
- Deliveries less than 6 Cubic yards are subject to our minimum load charges.
- This quote does not guarantee product or service availability
- All Aggregates and Concrete loads have an additional fuel surcharge.

Quoted By: JUSTIN DAWSON

* E – Environmental | S – Saturday Fee | F – Fuel Surcharge

INSEARCH ABC QUOTE NOT SELECTED

Travis Monk

From: Insearch Corp Estimating <estimating@insearchcorp.com>
Sent: Wednesday, July 16, 2025 8:04 AM
To: Travis Monk
Cc: Danny Reese; Saakshi Amrale
Subject: RE: City of Chandler CMAR 66" Redundant Sewer - Updated Quote Request

Travis,
Unfortunately, we have no idea what the suppliers are going to do in 2026. My guess is add another $1.00 to the ABC and make the reject $20.00 a ton. Hopefully, that is enough, and we may get lucky and there will be no increase.

Thanks,

Thank you,

Heather Woodhurst
Senior Estimator
602-622-6072

INSEARCH
TRUCKING & LOGISTICS

From: Travis Monk <tmonk@bfcontracting.com>
Sent: Tuesday, July 15, 2025 5:41 PM
To: Insearch Corp Estimating <estimating@insearchcorp.com>
Cc: Danny Reese <dreese@insearchcorp.com>; Saakshi Amrale <saakshi.amrale@bfcontracting.com>
Subject: RE: City of Chandler CMAR 66" Redundant Sewer - Updated Quote Request

Good Evening,

Can I get an updated quote for MAG Spec ABC delivered to Price Road and the 202, Chandler, AZ? It would be greatly appreciated if you could provide the updated quote by Friday. Project is anticipated to start January of 2026. Please keep that in mind when pricing and please detail any anticipated pricing increases for next year.

Thanks,

Travis Monk
Project Manager
Mobile: 602-326-9282 | tmonk@bfcontracting.com

B&F Contracting, Inc. | 11011 N 23rd Ave, Phoenix, AZ 85029
Office: 623-582-1170 | **Fax:** 623-582-3761 | www.bfcontracting.com
ROC08974 A | ROC111282 B-4

From: Insearch Corp Estimating <estimating@insearchcorp.com>
Sent: Monday, March 24, 2025 6:55 AM
To: Travis Monk <tmonk@bfcontracting.com>
Cc: Danny Reese <dreese@insearchcorp.com>
Subject: RE: City of Chandler CMAR 66" Redundant Sewer - Updated Quote Request

Travis,
I emailed a price for the chips, and the previous quote for ABC $20.40 is good thru June. Then we need to add $1.00 per the supplier. $21.40 is good thru 12/31/2025

Thank you,

Heather Woodhurst
Senior Estimator
602-622-6072

INSEARCH
TRUCKING & LOGISTICS

From: Travis Monk <tmonk@bfcontracting.com>
Sent: Friday, March 21, 2025 9:49 AM
To: Insearch Corp Estimating <estimating@insearchcorp.com>
Subject: City of Chandler CMAR 66" Redundant Sewer - Updated Quote Request

Good Morning,

For this Chandler 66” Redundant Sewer CMAR project, can I get an updated quote for the below materials delivered to Price Road and the 202, Chandler, AZ? Thanks and let me know if you have any questions.

- Aggregates:
  - MAG Spec ABC: 15,000 Tons
  - Sand: 200 Tons
    - Sand is for 48” Sewer Pipe Bedding and Backfill to Springline of Pipe (I couldn’t find any specific specs in MAG)
  - 3/8” Minus Pea Gravel: 1000 Tons

VULCAN ABC QUOTE NOT SELECTED

Travis Monk

From: Castro, Jesse <castroje@vmcmail.com>
Sent: Thursday, July 17, 2025 4:21 PM
To: Travis Monk
Cc: Saakshi Amrale
Subject: Re: RFQ - City of Chandler CMAR 66-inch Redundant Sewer

Good afternoon,

Updated pricing for this project would be-

MAG Spec ABC 25.96/Ton Delivered
Trackout Rock 33.7/Ton Delivered
This pricing would be through end of 2025

Jesse Castro
Vulcan Materials Company
AZ Sales Representative
Mobile - 480-708-9498
Email - castroje@vmcmail.com

On Tue, Jul 15, 2025 at 5:44 PM Travis Monk <tmonk@bfcontracting.com> wrote:

> Jesse,
>
> Can you provide an updated price for MAG Spec ABC delivered to Price Road and the 202, Chandler, AZ? It will be about 15,000 tons.
>
> Can you also include 100 tons of track-out rock?
>
> Thanks,

SELECTED AS LOWEST BIDDER

Insituform®
An azuria Water Solutions Company

7/18/2025

Project Proposal

Re: Loop 101 and 202 Freeway 66" Redundant Sewer – CIPP Lining
Chandler, AZ

Attn: Travis Monk
B&F Contracting, Inc.

INSITUFORM TECHNOLOGIES, LLC herein proposes to furnish a Proposal for the labor, materials, equipment, and services set forth below to reconstruct the referenced project. The following prices should be considered confidential.

PROPOSAL PRICING

Bid Item	Description	Quantity	Unit	Unit Cost	Amount
1	Mobilization (Three total)	1	LS	$ 38,109.00	$ 38,109.00
2	CIPP 30"	938	LF	$ 251.00	$ 235,438.00
3	CIPP 48"	2,019	LF	$ 399.00	$ 805,581.00
4	CIPP 66"	652	LF	$ 981.00	$ 639,612.00
	TOTAL				**$ 1,718,740.00**
	Lining and cleaning/CCTV only (See full list of Inclusions & Exclusions below)				

ASSUMPTIONS AND QUALIFICATIONS

Insituform Technologies, LLC (Insituform) have based this proposal on a nominal wall thickness for the Insitutube as shown in the specifications or derived from general, industry accepted specifications and design criteria. This is based on the best available information at the time of this proposal. Existing pipe deterioration in excess of the conditions assumed, ground water loads in excess of those assumed, or other loads or conditions may increase the recommended thickness for all or portions of the work. Final recommendations may be submitted to you following the completion of the preliminary TV phase of the project. Stated prices are subject to adjustment if design changes are agreed upon.

Insituform is a NON-union shop, is considered a specialty contractor, and shall not be subject to any union requirements or project labor agreements.

Water shall be provided at no cost to Insituform for all construction phases of this project. Insituform will follow all required deposit, backflow prevention, and metering procedures.

Access requirements for existing pipeline to be rehabilitated shall be provided by Owner and/or Prime Contractor – includes entry and exit access approved from Insituform Project Manager and/or Field Engineer.

Specific service connections, if encountered, will not be reconnected only when written directions are received from the Owner. The Owner will indemnify and hold Insituform harmless from all claims arising from backups and other effects of such actions or inactions from services not opened at the Owner's request. In the event that

Insituform is unable to locate or reconnect a service lateral internally, the Prime Contractor will externally reconnect the service and repair any damages to the CIPP at no cost to Insituform.

PROPOSAL INCLUSIONS

Insituform proposal pricing includes only the items listed below; other items, scope of work, and/or project requirements are not part of the Insituform proposal pricing:

1. Three mobilizations and demobilizations. - based **on a mutually agreeable schedule between Insituform and the Owner and/or Prime Contractor.** The Owner and/or Prime Contractor needs to give Insituform at least one-week advance notice of any changes to the mutually agreed upon schedule. If through no fault of Insituform the mutually agreed upon schedule changes with less than one-week notice, then Insituform may charge the Owner and/or Prime Contractor an additional mobilization charge and any potential lost materials including but not limited to tube already "wetout".
2. Installation of Cured-In-Place Pipe (CIPP) lining per ASTM F1216 Cured-In-Place Pipe Lining including inversion, curing, and finishing. Insituform will utilize a polyester resin system.
3. CCTV, post-installation.
4. Confined space safe entry practices.
5. As specified standard construction warranty.
6. Certificate of insurance with a standard coverage.

PROPOSAL EXCLUSIONS

Insituform proposal pricing excludes all items and scope of work listed below. These items, if needed or found to be applicable, would be provided by Insituform at your additional cost; or would be furnished by others, at your direction, at no cost to Insituform:

1. Bypass Pumping/Dewatering
2. Traffic Control
3. Cleaning and CCTV, pre-installation.
4. 1-year warranty CCTV inspection.
5. Heavy cleaning, mechanical cleaning.
6. T-Lock PVC Liner Repair.
7. Special disposal of cure water.
8. Styrene barrier on CIPP liner
9. Removal/installation of fittings or valves
10. Internal lateral reinstatement.
11. Lateral Sealing – Top Hats by others
12. Manhole installation, rehabilitation, and/or replacement
13. Point repairs, if required, prior to lining
14. Excavation of any kind
15. Filling of annular space between casing and host pipe
16. Water for curing of CIPP installation
17. Trenchless point repairs or sectional liners
18. Removal of manhole cones for access to sewer pipe
19. Manhole bench widenings or throat adjustments
20. Restorations, finished surface repairs (e.g. landscaping, sidewalk, road repairs), or any finished surface repairs required by the owner.
21. Archaeological Monitoring
22. Owner or General Contractor to provide access to water from fire hydrants within a convenient distance from each cleaning and inversion site location
23. *If any hazardous or toxic materials are encountered during the project, the Owner will be responsible for the removal and disposal of the materials.*
24. Any special permits or licenses
25. State and local sales and/or use taxes are excluded, including gross receipts. If the project is exempt, please submit the appropriate documentation.
26. Additional premiums for special insurance coverage(s) required by you or other parties particular to this project.
27. Performance and payment bond not included but is available upon request. If required, please add 2.5% to the total project cost.
28. Stamped Designs.

PROPOSAL TERMS AND CONDITIONS

a) When CIPP is required to negotiate bends or defects in the host pipe, there is a tendency to experience wrinkling in the installed CIPP around the inside radius of the bend or in the area where the host pipe defect is located. This is normal and should be expected. It will not affect the structural integrity of the finished product. Insituform Technologies, LLC will not be liable for repairs or penalties due to wrinkles in the CIPP at the locations of bends or defects in the host pipe.

b) Limits of Liability. In consideration of **INSITUFORM TECHNOLOGIES, LLC** agreement to maintain no less than $5,000,000 of comprehensive general liability insurance in the form required by the Contract, **INSITUFORM TECHNOLOGIES, LLC** liability to the Owner for any matter covered by such insurance will be limited to the extent of such insurance and the Owner will indemnify and hold **INSITUFORM TECHNOLOGIES, LLC** harmless from any third party claims covered by such insurance to the extent such claims exceed the limits of such insurance. Neither party shall be liable to the other for consequential damages relating to the contract. In case of conflict between this provision and any other provision in the Contract as ultimately executed, this provision shall govern and prevail.

c) LIMITED WARRANTY. IN LIEU OF ALL OTHER EXPRESSED, IMPLIED AND/OR STATUTORY. WARRANTIES, INCLUDING WARRANTIES OF MERCHANTABILITY AND FITNESS FOR A PARTICULAR PURPOSE, INSITUFORM AGREES TO CORRECT ANY DEFECTS IN THE MATERIALS OR SERVICES PROVIDED BY INSITUFORM WHICH ARE BROUGHT TO THE ATTENTION OF INSITUFORM WITHIN ONE YEAR FOLLOWING COMPLETION OF INSITUFORM'S WORK, PROVIDED OWNER AFFORDS INSITUFORM SUITABLE ACCESS AND WORKING CONDITIONS TO ACCOMPLISH SUCH CORRECTION.

d) MUTUAL RELEASE OF CONSEQUENTIAL DAMAGES. Neither party shall be liable to the other for consequential damages relating to or arising out of the Contract.

e) PROPOSAL SUBJECT TO NEGOTIATION OF OTHER STANDARD TERMS OF AGREEMENT. This proposal is subject to agreement of the parties on other terms and conditions as are customary in contracts of this nature.

f) If actual quantities differ significantly from those stated in the proposal, then work will be renegotiated.

g) Payments are due at net within thirty days of invoice. Final payment is due within thirty days of completion of project.

h) Monthly progress partial payments may be requested for the value of work in progress or completed, including materials secured and on site.

i) Prices stated are in effect for thirty days from the date of this proposal. The acceptance period may be extended at the sole option of **INSITUFORM TECHNOLOGIES, LLC.**

j) Conflicts. In case of conflict between the provision of the aforesaid paragraphs and any other provision in the Contract as ultimately executed the provisions as set forth above shall govern and prevail.

OFFERED BY:

INSITUFORM TECHNOLOGIES, LLC

BRAD CONDER
COMMERCIAL MANAGER
(801) 472-8472
bconder@azuria.com

ARIZONA OFFICE:

645 SOUTH 24TH STREET
TEMPE, AZ 85282
(480) 446-0620

ACCEPTED BY:

_____
CONTRACTOR NAME OR ORGANIZATION

_____
SIGNATURE

_____
AUTHORIZED REPRESENTATIVE

_____
TITLE

_____
DATE

NOT SELECTED

SAK™

Pipeline Infrastructure. Solved.™

2400 W. Medtronic Way, Ste. 1
Tempe, AZ 85281
480.766.8214 *tel*
www.sakcon.com

PROPOSAL

FROM: Victor Villalobos **COMPANY:** SAK Construction, LLC **PAGES:** 4

DATE: 07/18/25

RE: CMAR – Chandler, AZ – Loop 101 & 202 Freeway 66" Redundant Sewer – CIPP Scope Only

The following is our unit price quotation for the CIPP portion of the above referenced project:

ITEM NO.	ITEM DESCRIPTION	QTY	U/M	UNIT PRICE	TOTAL PRICE
BASE BID					
1	Mob/Demob	1	LS	$ 20,000.00	$ 20,000.00
2	30" CIPP Install	938	LF	$ 1,165.00	$ 1,092,770.00
3	Mob/Demob	1	LS	$ 20,000.00	$ 20,000.00
4	48" CIPP Install	1,997	LF	$ 1,185.00	$ 2,366,445.00
5	Mob/Demob	1	LS	$ 30,000.00	$ 30,000.00
6	66" CIPP Install	642	LF	$ 2,285.00	$ 1,466,970.00
				TOTAL BASE BID:	**$ 4,996,185.00**

***** SAK CONSTRUCTION IS A UNION CONTRACTOR *****

PROPOSAL INCLUSIONS:

1. One mobilization / demobilization to the project site for the CIPP lining crew for each of the diameters to be lined. Any additional mobilizations will be negotiated as extra work.
2. Install approximately 3,577 LF of cured-in-place pipe (CIPP) in the designated 30", 48", and 66" diameter pipelines. The CIPP will utilize a polyester resin system and be installed per ASTM F1216 and the supplied project specifications.
3. No laterals are anticipated in this scope of work.
4. Perform CCTV inspection of the CIPP-lined mainline pipe immediately subsequent to CIPP installation and provide required documentation of the inspection to the General Contractor. Only mainline pipes that have been lined with CIPP by SAK will be inspected.
5. Provide required testing of samples of the installed CIPP at an independent laboratory to confirm conformance with minimum specified physical properties. Sampling methods and frequency will conform to specified parameters.
6. Provide specified 2-year construction warranty on CIPP materials and workmanship.
7. Provide certificate of insurance and endorsements evidencing typical coverage and limits for General Liability ($1 million / $2 million), Automobile Liability ($1 million), Workers' Compensation & Employer's Liability ($1 million), and if required, Excess Liability ($5 million). If insurance coverage above and beyond this is required, the General Contractor will be responsible for securing any additional insurance coverage or reimbursing SAK for the costs associated with obtaining the additional insurance.

8. When payment of prevailing wages is applicable, provide the required documentation showing workers on this project have been paid in accordance with the relevant prevailing wage determination for the appropriate laborer classification.

PROPOSAL EXCLUSIONS:

The following items are not included in this proposal, and when required, will be provided by the General Contractor at no cost to SAK. If SAK is required to provide any of these items, the costs will be charged to the General Contractor as extra work.

1. Provide any necessary traffic, parking, &/or pedestrian control. Traffic, parking, &/or pedestrian control systems shall be coordinated to accommodate SAK's operations and placed in a timely manner such that SAK's operations are not impeded or delayed. The General Contractor shall also be responsible for all required traffic control plans.
2. Perform the Clean & TV inspection of the pipe and provide documentation of the inspection to SAK at least 6 weeks before Lining is scheduled. Perform any recleaning necessary in the interim between the initial cleaning and the CIPP installation.
3. Provide any point repairs or other repairs necessary or required to repair or prepare the existing pipeline for CIPP lining.
4. Provide any necessary plugging, damming, diversion, shutdown, and/or bypass pumping of existing pipeline flows, including providing any necessary dewatering of the pipelines, structures, access points, and liner termination points once the plugs, dams, diversion, shutdown, &/or bypass systems are in place and operating. Bypass or diversions systems shall be coordinated to accommodate SAK's operations and placed in a timely manner such that SAK's equipment and personnel are not obstructed by suction & discharge locations, or other components of the diversion or bypass system, and SAK's operations are not impeded or delayed. This shall also include providing any necessary odor control &/or monitoring work.
5. Provide legal and physical access to the pipeline, manholes, structures, and other access points sufficient to allow SAK's operations to be conducted, and to allow large trucks and equipment to access the structures and manholes directly when in streets, or as near as possible for easement locations. When applicable, this shall include locating, exposing, and making accessible any manholes, structures, or other access points, associated with SAK's work, including any necessary alterations to fencing, trees and vegetation, and providing any final restoration once SAK's operations are complete. When necessary, this shall also include providing expanded access by either staging construction of new structures or temporarily altering existing structures where the existing or new structure configuration will impede SAK's operations.
6. Provide any final repair, testing &/or inspection of CIPP-lined pipes when additional work has been performed in or on those pipes by others subsequent to the completion of SAK's work.
7. Provide access to a high-volume water supply at the project site either from the nearest fire hydrants, or other high-volume on-demand sources, as designated by and coordinated with SAK. Access to the water source must be within a mutually agreed upon distance from the installation sites.
8. Provide access to appropriate dump/discharge sites at the project site for disposal of liquids and material collected from the pipelines during pipeline cleaning and lining operations and other waste materials from the project.
9. All top hats or lateral liners. No laterals are anticipated or included in the current pricing.
10. Provide access to a secure yard at or near site for staging and storage of equipment and materials, when available.
11. Provide all required notifications of agencies and other parties affected by the work. This shall include providing any necessary public relations work.
12. Obtain and pay for all special licenses, permits, variances, or other fees required to perform the work. The only exception to this is that SAK will obtain and pay for its own city &/or county business license(s), when required.

13. If the contract is subject to Prime Contracting Transaction Privilege Tax (TPT), the pricing provided above does not include TPT on the total subcontract gross receipts or on the permanent materials to be integrated into the work under this proposal. The General Contractor shall provide the appropriate resale certificate, or other required documentation, verifying that any subcontract resulting from this proposal is exempt from the payment of TPT on the subcontract gross receipts and permanent integrated materials. If appropriate resale or exemption documentation is not provided, TPT will be calculated and added to the subcontract pricing above at the applicable tax rate.
14. Subcontract bonds are not included. If subcontract bonds will be required, they can be provided for an additional fee of 1.5% of the bonded amount.

OTHER CONDITIONS:

1. Work covered by this proposal will be performed under a mutually agreed upon subcontract agreement which incorporates the terms and conditions contained in this proposal either by direct attachment, by insertion, or by reference. In case of conflict, the terms and conditions of this proposal shall prevail. The subcontract agreement shall not require either party to be liable to the other for consequential damages arising out of or relating to the subcontract or contract.
2. If SAK's operations are delayed by the General Contractor or others, then standby costs &/or additional mobilization costs will be charged to the General Contractor accordingly.
3. This proposal is based on the assumption that, even though the pipelines associated with this project will be out of service, they are connected to active systems downstream, such that water discharged in the course of SAK's operations will drain downstream to an active sewer system and not be trapped or surcharged within the system.
4. Normal working hours for installing CIPP are 24-hours a day due to the nature of the product, which requires that once an install is started, it cannot be suspended until it is completed. To the extent that SAK will incur overtime expenses due to this schedule, those costs have been anticipated and are covered in this proposal. However, SAK will not be liable for any penalties, liquidated damages, overtime inspection costs, or other fees that may result from these required working hours.
5. Progress and final payments are due within 30 days of invoice, or when applicable regulations require, whichever is soonest. Release of any withheld retention shall be no later than 30 days from the completion and acceptance of the work covered under this proposal, excluding any subsequent work required in the warranty period, and regardless of whether the General Contractor's retention has been released by the Owner. If retention is not withheld from the General Contractor's payments, then retention shall not be withheld from SAK's payments. Overdue amounts will be subject to interest at a rate of 1.5% monthly, 18% annually.

6. This proposal covers only the scope of work specifically included above. It does not cover performing any cleaning or inspection of pipe or structures not specifically included above; warranty inspections or testing; verification of active/inactive status of laterals; alteration, repair, installation, or rehabilitation of manholes or other structures; abandonment of any pipe or structures; bypassing, plugging, shutdown, damming, diversion, or dewatering of existing pipe flows or structures; odor control &/or odor monitoring work or plans; pedestrian control, parking control, or traffic control; sampling or testing of the installed CIPP liner not specifically included above; sampling or testing of any substances or materials on the project not specifically included above; alteration, testing, sealing, repair, replacement, or rehabilitation of any lateral pipes or lateral connections, aside from any internal reinstatement specifically included above; grouting or repair of obstructions, voids, or defects in the host pipe prior to or after lining; UV cured fiberglass point repairs (UVPR) or cured-in-place sectional liners (CIPSL); top hat type service connection seals, unless specifically included above; mandrel testing or other similar testing of the pipe; or any work requiring excavation. This proposal also does not cover providing any field yards, meeting facilities, or office facilities for the project; phones, cameras, computer software, or computer equipment for the use of the General Contractor or Owner; photos or other documentation for record of pre- or post-construction site conditions; tree or vegetation clearing, trimming, removal, protection or restoration; site grading; snow &/or ice removal; handling, transportation, or disposal of hazardous materials; surveying or staking; engineered plans, designs, or drawings, with the only exception being if the CIPP specification specifically requires engineered CIPP thickness designs, then those designs will be provided; preparation or implementation of any pollution control or environmental protection programs or plans; environmental stewardship; street sweeping; security; fire control truck and operator; fencing of any kind; erosion or sedimentation control; community relations or public relations work; project signs or advance notification signs; and any necessary archaeological, biological, or ground settlement / movement monitoring and mitigation. If any of this type of work is required to be performed by SAK, it will be considered to be extra work and charged accordingly.
7. For the purposes of this proposal, the General Contractor shall be defined to be the entity contracting with SAK to perform the work covered under this proposal.
8. This proposal is valid for 90 days from the date of submission as indicated above.

Bragg
PO Box 727
Long Beach, CA 90801
(562) 984-2400 Ph.
(562) 984-2467 Fax

Quote Number:	P-12550	**Quoted out of:**	Phoenix
Date of Quotation:	7/18/2025	Bragg Contact:	Cerny, Paul
		Phone Number:	(602) 284-2546
		E-Mail:	paul.cerny@braggcrane.com
Customer:	Bragg Crane & Rigging - PH	Quoted To:	Benjamin Esquivel
Address:	2816 N 27th St Phoenix,AZ 85009	Phone Number:	(602) 233-0205
		E-Mail:	
Jobsite Name:	Price Road & 202	Start Date:	
Jobsite Address:		End Date:	
		Quotation Status:	Quoted to Customer

Work to be performed: Set Precast

Lift Information:

Heaviest Pick	160000	Radius	60	Height	0
Up		In		Set Back Fr. Bldg.	

Equipment Required:

Description	Est. Qty		Rate	Est. Amt
Crane Mobilization Per Trip	1.00	Each	$12,750.00	$12,750.00
550 Ton Hydraulic Truck Crane Per Day- 8 Hour Minimum	1.00	Day	$7,480.00	$7,480.00
Crane Demobilization Per Trip	1.00	Each	$12,750.00	$12,750.00
Surcharge	1.00		10.00%	$3,298.00
			Quote Estimate:	**$36,278.00**

Comments: This quote is contingent on a clear working and level working area. Any hours worked over 8-hours $50.00 per man, per hour will be added for overtime. A firm and level set up area for the crane must be provided. There will be a 10% fuel surcharge on the invoice total

*****Issuance of a purchase order acknowledges acceptance of this quotation**

Bragg
PO Box 727
Long Beach, CA 90801
(562) 984-2400 Ph.
(562) 984-2467 Fax

Quote Number:	P-12549	**Quoted out of:**	Phoenix
Date of Quotation:	7/18/2025	Bragg Contact:	Cerny, Paul
		Phone Number:	(602) 284-2546
		E-Mail:	paul.cerny@braggcrane.com
Customer:	Bragg Crane & Rigging - PH	Quoted To:	Benjamin Esquivel
Address:	2816 N 27th St Phoenix,AZ 85009	Phone Number:	(602) 233-0205
		E-Mail:	
Jobsite Name:	Price Road & 202	Start Date:	
Jobsite Address:		End Date:	
		Quotation Status:	Quoted to Customer

Work to be performed: Set Precast

Lift Information:

Heaviest Pick	60000	Radius	30	Height	0
Up		In		Set Back Fr. Bldg.	

Equipment Required:

Description	Est. Qty		Rate	Est. Amt
Crane Mobilization Per Trip- Sewer	1.00	Each	$1,890.00	$1,890.00
190 Ton Hydraulic Truck Crane Per Day- 8 Hour Minimum- Sewer	1.00	Day	$5,478.00	$5,478.00
Crane Demobilization Per Trip- Sewer	1.00	Each	$1,890.00	$1,890.00
Crane Mobilization Per trip-pumps	1.00	Each	$650.00	$650.00
90 Ton Hydraulic Truck Crane Per Day- 8 Hours-Pumps	1.00	Day	$3,850.00	$3,850.00
Crane Demobilization Per Trips- Pumps	1.00	Each	$650.00	$650.00
Surcharge	1.00		10.00%	$1,440.80
			Quote Estimate:	**$15,848.80**

Comments: This quote is contingent on a clear working and level working area. Any hours worked over 8-hours $50.00 per man, per hour will be added for overtime. A firm and level set up area for the crane must be provided. There will be a 10% fuel surcharge on the invoice total

*****Issuance of a purchase order acknowledges acceptance of this quotation**

DAVIT CRANE QUOTE

Engineered Solutions. Smart Infrastructure.

JAMES, COOKE & HOBSON, INC.

3501 E Broadway Rd, Phoenix, AZ.85040
Phone: 602-586-1439
Fax: 602-276-5402
E-mail egm@jchinc.com

MARCH 21, 2025

To: B&F CONTRACTING

Quotation #: 032125-1EGM

Job Name: CHANDLER CMAR 66 INCH REDUNDANT SEWER
Location: CHANDLER , AZ
Quotation by: ED MARTIN

Attn: TRAVIS MONK
Ph:

Unless otherwise stated: Prices are firm for 30 days from bid date, payment terms are NET 30 DAYS from shipment. Interest shall accrue at 1.5% per month on past due amounts per month. Any taxes are additional. **Items included are only listed below.** Please review carefully

---

QTY	DESCRIPTION	TOTAL
2	5PT20G-E2 Commander Series 2000 lbs. / 900 kg maximum capacity portable davit crane with a 4WP2-K power winch. Crane includes: - Handle for easy 360° rotation with Nylatron flange bearing - Adjust boom angle with ratchet style screw jack finished with Galvanized Protective Coating - Adjust boom reach with boom extension - Quick connect winch mounting plate with single clevis pin connection - Welded constructed structural steel pipe and tubing - Hot Dipped Galvanized finish - Stainless Steel assembly hardware Winch Includes: - 1.3 HP TENV, 115-1-60 motor - Automatic internal load brake - 6-foot NEMA 4 pendant control and an 8-foot power cord with grounded plug - Line Speed range from 8 – 13 fpm - Frame constructed of mild steel - Gear reducer and drum constructed of cast aluminum - Pressure plate with corrosion-resistant trivalent zinc finish - Red Enamel finish - Slot for swaged ball end on wire rope assembly to allow for Quick Disconnect option. This feature allows you to keep the hook end of the wire rope assembly attached to the load at all times, disconnect the wire rope from the winch and attach the swaged ball end to a Wire Rope Keeper (RK19-25S) or Cable Reel (RW50). - Quick disconnect option allows crane to be moved to another base location - Stainless Steel fasteners to mount winch to crane	
2	5BE20-15G Commander Series 2000 Base Extension - 15” / 38cm long - Available for use with the 5PT20 series davit crane and base configuration - Hot Dipped Galvanized finish Use with flush or wall mount base to maintain crane height. Use with pedestal base if additional height is required. Bases available in various finishes.	
5	5BF20G Commander Series 2000 (5PT20) Flush Mount Base - Base cover with lanyard - Hot Dipped Galvanized finish	

CONT.

5 AN62A-6S

Expansion bolt anchor kit
Includes four bolts
ANCHOR DIAMETER: 5/8"
ANCHOR LENGTH: 6"
304 STAINLESS STEEL

5 WS25-45NS
1/4" diameter 7x19 aircraft cable assembly
- 304 Stainless Steel
- 45 feet long
- Swaged ball one end
- 316 SST Swivel hook with safety latch other end
- Ships loose with order

THE TOTAL NET PRICE F.O.B. FACTORY WITH FREIGHT ALLOWED TO THE JOB SITE IS…$20,517.00

NOTES:

- **The above price is firm for 30 days. After such time it may be subject to review. Shipment has been estimated at Approx. 4-6 weeks after receipt of purchase order and/or approved submittal drawings.**
- **Price includes: Freight to the job site off loaded by-others. Submittal drawings and start-up supervision.**
- **Prices do not include: Sales tax**
- **Thank you for this opportunity to be of service. If you have any questions regarding this quotation or any other matter, Please do not hesitate to call.**

FRP GRATING ONLY
RESPONSIVE BIDDER

Fibergrate Composite Structures Inc

1234 Johnson Road, Suite 366 ~ Allen, TX 75013 USA

T: 800-527-4043 ~ F: 972-250-1530

Quote No.91219 Quote Type: Fab Per Approval (original)

Bid Type: Budget

Customer:	B&F Contracting, Inc	Date: July 18, 2025	
Address:	11011 North 23rd Avenue	Phone: 623-582-1170	
	Phoenix, Arizona 85029	Fax:	
	United States		
Attention:	Travis Monk	Cell:	
	tmonk@bfcontracting.com		
	623-582-1170		

Opportunity: City of Chandler Pre-cast

Location: Chandler, AZ 85248

Fibergrate appreciates the opportunity to bid on your FRP requirement, and offers the following quotation for your consideration. Fibergrate is an ISO-9001:2015 certified manufacturer and is one of the original pioneers in the FRP fabrication industry, having invented fiberglass molded grating in 1965. With more than 50 years of experience in FRP fabrications , Fibergrate has the experience and capabilities necessary to design, manufacture , and fabricate the materials for your project to ensure that the assembly at the jobsite will proceed smoothly. Fibergrate continues its commitment as a leader in the FRP market. All of the FRP products and solutions offered in this quotation are heavy metal safe. If you have any questions about heavy metals in FRP products or how they can affect your business, our communities and our environment, please go to our website (www.fibergrate.com) or contact your local Fibergrate Representative.

All material take-offs were derived from drawing M-2.0, M-2.1, M-2.2, M-3.0, M-3.1, M-3.2, M-3.3, M-3.4, M-3.5, M3.6, S1.2, S-3.0, S-301 revision 0 dated February 2025. Specification 06611 was provided with request for quote. Quoted FRP materials area based off e-mail received on 02/20/2025. All quoted FRP materials will be per the design by the engineering department and are based of a 500 pound concentrated loading.

MATERIALS of CONSTRUCTION:

Vi-Corr® 1 1/2" deep 1 1/2" square mesh molded grating with meniscus surface, color dark gray.

Dynaform® VEFR structural shapes, color beige.

316 Stainless Steel Hardware.

SCOPE of WORK:

Fibergrate® will provide the following:

Drawing M-2.0 revision 0 dated February 2025:

Junction Structure B:

One (1) area of 1 1/2" deep 1 1/2" square mesh molded grating with a non-slip meniscus surface. This area to be approximately 902 square feet. Grating supports to be FRP structural beams, all FRP to FRP structural connections to be made using 316 stainless steel hardware.. Beams to rest on concrete except for areas where spanning over open channels. Channel opening range from 6'-0" to 6'-8". Grating to attach to the FRP supports using Fibergrate's standard 316 stainless steel grating hold down clip assemblies. All grating pieces to be cut down to 24" wide or less to fit through a man-hole.

Drawing M-3.0 revision 0 dated February 2025:

Junction Structure C:

One (1) area of 1 1/2" deep 1 1/2" square mesh molded grating with a non-slip meniscus surface. This area to be approximately 200 square feet. Grating supports to be FRP structural beams, all FRP to FRP structural connections to be made using 316 stainless steel hardware.. Beams to rest on concrete except for areas where spanning over open channels. Channel opening to be approximately 5'-10". Grating to attach to the FRP supports using Fibergrate's standard 316 stainless steel grating hold down clip assemblies. All grating pieces to be cut down to 24" wide or less to fit through a man-hole. This area includes a 2'-0" (square) section of removable grating.

Drawing M-3.4 revision 0 dated February 2025:

Junction Structure E:

One (1) area of 1 1/2" deep 1 1/2" square mesh molded grating with a non-slip meniscus surface. This area to be approximately 200 square feet. Grating supports to be FRP structural beams, all FRP to FRP structural connections to be made using 316 stainless steel hardware.. Beams to rest on concrete except for areas where spanning over open channels. Channel opening to be approximately 4'-10". Grating to attach to the FRP supports using Fibergrate's standard 316 stainless steel grating hold down clip assemblies. All grating pieces to be cut down to 24" wide or less to fit through a man-hole. This area includes a 2'-0" (square) section of removable grating.

****

Special Notes:

1.) This quote has been prepared using non-domestic bolts, nuts, and washers.

2.) If US domestic hardware is required contact Fibergrate Composite Structures for a revised quote using US domestic hardware.

Special Notes:

****

NOTES:

Fibergrate reserves the right to a final review of it's quotation prior to accepting a purchase order.

This quotation allows for three (3) sets of Approval & Erection drawings, additional drawings are available at an additional cost of $5.00 per sheet.

Fibergrate's standard fabrication and manufacturing tolerances will apply as follows:

1.) Structural shapes & plate = +/- 1/8"; Cut grating = + 1/8" / - 5/16".

2.) Cut grating may have open or unequal stub bars.

3.) No specifications for design/products were provided with request for quote.

4.) No design calculations are included with the quotation.

5.) Design calculations are available with projects requiring approval drawings at an additional charge.

6.) Fibergrate Composite Structures has a manufacturing facility in Stephenville, TX.

7.) Grating will be attached to the structure using provided hold down clip assemblies.

8.) This quotation is based upon customer providing AutoCad drawings to Fibergrate before approval drawings can be started.

9.) All grating notches/penetrations shown on the contract drawing are included in this quotation.

10.) All grating notches/penetrations not shown can be provided at additional cost.

11.) Hold-down clips/anchors are available but not included in this quotation unless specifically referenced.

12.) FRP platforms and other structural fabrications will require assembly.

13.) Visit www.fibergrate.com for Company history, literature, catalogs, specifications and product information.

EXCLUSIONS:(to be provided by others)

Anchor bolts (including concrete screws used in conjunction with grating hold down clips), installation, field measurements and any other items not specifically included in the above described "Scope of Work" are to be provided by others.

PRICING:

Fibergrate will provide prefabricated materials per this quotation for the amount of:

Lump Sum Sales Price:	**$213,910.00**	(USD)
		(Taxes and Tariffs NOT included)

Freight Included in Total Quoted Price for delivery to zip code 85248.

Freight Included based on One Complete Shipment.

Multiple shipments will result in additional charges to be determined at time of request. Executed change orders will be required prior to release of materials for shipment.

TERMS OF DELIVERY:

Terms of Delivery: FOB Point of Origin

SUBMITTAL REVISIONS: Submittal revisions due to customer requested changes will be billed at a rate of $60/HR for any additional drafting and/or engineering.

QUOTE VALIDITY: This quotation is firm for acceptance within thirty (30) days from the Bid Date.

SHIPMENT: Prices are firm for shipment within six (6) months of date of receipt of order. After six (6) months, prices may escalate per the Producer Price Index (PPI) for Finished Goods as reported at www.bls.gov/ppi. Price will be adjusted at quarterly intervals per the PPI until material shipment. Executed change orders will be required prior to release of materials for shipment.

ESTIMATED DELIVERY:

(Lead times to be determined upon receipt of a purchase order.)

Fibergrate Territory Manager:	Ben Loth E-Mail: ben.loth@fibergrate.com Tel: 480-851-8541
Fibergrate Field Sales Manager:	West USA House, Greg Harris E-Mail: greg.harris@fibergrate.com Tel: 480-695-2052
This quotation was prepared by:	KW

Terms of Payment: net 30

Terms of Delivery:

Fibergrate Composite Structures terms and conditions govern this quote. [x] See attached.

FOSTER ENGINEERED PRODUCTS SELECTED AS LOWEST BIDDER FOR ALL PROJECT HATCHES

an Amesbury Truth company

QUOTE

The Bilco Company
P.O. Box 1203
New Haven, CT. 06505
(203) 934-6363, Email cs@bilco.com

Date	Quote	Pg
07/17/25	480327	1

THIS QUOTE WILL EXPIRE ON 08/31/25

Cust # 542574

FOSTER ENGINEERED PRODUCTS
1819 E MORTEN AVE
STE 200
PHOENIX AZ 85020
RICHARD
Phone 602-265-0127 Fax 602-266-0455 Email jen@fosterengineered.com

City of Chandler CMAR 66-

Qty	Product	Description	Weight Pounds	Unit Price	Extension US Dollars
<Main Products>					
1	JD-SS-H20	BILCO FLOOR/VAULT/SIDEWALK DOOR 4' 0.00 X 7' 0.00 (1220mm X 2135mm) HINGED ON 7' 0.00 (2135mm) SIDE Description 1/4" (6.35mm) DIAMOND PATTERN DBL COVE Description DRAINAGE FRAME W/ DRAIN COUPLING Live Load H-20 WHEEL LOAD (OFF-STREET LOCATIONS) Lock STAINLESS STEEL SLAM LOCK Finish MILL FINISH W/ELECTROCHEMICAL PASSIVATION OF WELDS Hdwe 316 STAINLESS STEEL HARDWARE BILCO PART # XJD095001 HINGED ON THE 7'0" SIDES. MANUFACTURED WITH TYPE 316 STAINLESS STEEL, 1/4" DIAMOND PLATE COVERS, 1/4" SMOOTH PLATE FRAME, TYPE 316 STAINLESS STEEL HARDWARE, MILL FINISH WITH ELECTROCHEMICAL PASSIVATION OF WELDS REINFORCED FOR H-20 LOADING. MODIFIED WITH RECESSED PADLOCK HASP.	1528	15037.65	15037.65 NET
1	PARTS SW	FALL PROTECTION FALL PROTECTION FOR JD-SS-H20 4'X7' UNIT.	70	814.05	814.05 NET
3	J-SS H20	BILCO FLOOR/VAULT/SIDEWALK DOOR 2' 0.00 X 7' 0.00 (609mm X 2135mm) HINGED ON 7' 0.00 (2135mm) SIDE Description 1/4" (6.35mm) DIAMOND PATTERN COVER Description DRAINAGE FRAME W/ DRAIN COUPLING Live Load H-20 WHEEL LOAD (OFF-STREET LOCATIONS) Lock STAINLESS STEEL SLAM LOCK Finish MILL FINISH W/ELECTROCHEMICAL PASSIVATION OF WELDS Hdwe 316 STAINLESS STEEL HARDWARE BILCO PART # XJ0095001 HINGED ON THE 7'0" SIDE. MANUFACTURED WITH TYPE 316 STAINLESS STEEL, 1/4" DIAMOND PLATE COVER, 1/4" SMOOTH PLATE FRAME, TYPE 316 STAINLESS STEEL HARDWARE, MILL FINISH WITH ELECTROCHEMICAL PASSIVATION OF WELDS REINFORCED FOR H-20 LOADING. MODIFIED WITH RECESSED PADLOCK HASP.	860	8039.25	24117.75 NET

QUOTE

The Bilco Company
P.O. Box 1203
New Haven, CT. 06505
(203) 934-6363, Email cs@bilco.com

Date	Quote	Pg
07/17/25	480327	2

THIS QUOTE WILL EXPIRE ON 08/31/25

Cust # 542574

FOSTER ENGINEERED PRODUCTS
1819 E MORTEN AVE
STE 200
PHOENIX AZ 85020
RICHARD
Phone 602-265-0127 Fax 602-266-0455

City of Chandler CMAR 66-

Email jen@fosterengineered.com

Qty	Product	Description	Weight Pounds	Unit Price	Extension US Dollars
3	PARTS SW	FALL PROTECTION	37	421.20	1263.60 NET

FALL PROTECTION FOR J-SS H20 2'X7' UNIT.

** ABOVE PRICE IS NET FOR ALL TYPES OF CUSTOMERS. MAXIMUM DISCOUNT APPLIED.

FOB: FACTORY
FABRICATION TIME:
DUE TO MARKET CONDITIONS RELATED TO MATERIAL AVAILABILITY, LEAD TIME TO BE DETERMINED WHEN PURCHASE ORDER IS RELEASED FOR FABRICATION.

**ADD TO ABOVE PRICE FOR FREIGHT TO PHOENIX, AZ 85029: $1,502.81
CHR LTL

<Terms>

ALL SALES BY THE BILCO COMPANY ARE GOVERNED BY TERMS AND CONDITIONS ATTACHED TO THIS QUOTATION.
PLEASE MAKE P.O. OUT TO THE BILCO COMPANY AS A SUPPLIER WITH NO RETAINAGE

<Taxes>

Above Pricing Does NOT Include Sales Tax. Sales Tax WILL BE CHARGED Based On The SHIPPING DESTINATION.
IF TAX EXEMPT, PLEASE FORWARD EXEMPTION CERTIFICATE WITH YOUR ORDER

<Exceptions>

Fall Protection Grating System consists of aluminum panel(s) withstain less steel hardware (hinges, hold open latch, and all fasteners). Padlock lug provided for security (padlock by others).
Fall protection system meets OSHA 29 CFR 1926.502(c)

Stainless Steel material is subject to prior sale.Please consult facto ry at time of order for material availability.

Important Note: The above doors are suitable for use in off-street locations where not subjected to high density, fast moving traffic

Support required under frame and shelf -designed and installed by others in the field.

QUOTE

The Bilco Company
P.O. Box 1203
New Haven, CT. 06505
(203) 934-6363, Email cs@bilco.com

Date	Quote	Pg
07/17/25	480327	3

THIS QUOTE WILL EXPIRE ON 08/31/25

Cust # 542574

FOSTER ENGINEERED PRODUCTS
1819 E MORTEN AVE
STE 200
PHOENIX AZ 85020
RICHARD
Phone 602-265-0127 Fax 602-266-0455

City of Chandler CMAR 66-

Email jen@fosterengineered.com

Qty	Product	Description	Weight Pounds	Unit Price	Extension US Dollars

If Units Not Released To Fabrication By 08/31/25 Pricing Is Subject To Review

<Notes>

Freight is subject to additional charges for appointment/notification, delivery to construction sites, limited access sites, residential deliveries, lift gates and excessive pallet length (greater than 8').

Price is FOB factory and does not include tax or freight.

Any change or addition to above items as quoted will result in a price change.

If an order is placed for the items quoted above, lead time will be reviewed and may change based on plant capacity & schedule and/or our material suppliers lead times at the time of the order.

Price may be subject to change pending review of specifications and/or details.

Note: Pricing is based on all units being shipped at the same time to the same location.

If we are favored with an order, it would be necessary for us to furnish drawings for architectural approval prior to fabrication.

If Units Not Released To Fabrication By 08/31/25 Pricing Is Subject To Review

PLEASE ADVISE IF THE BUY AMERICAN ACT, THE BUY AMERICA ACT, OR THE AMERICAN RECOVERY AND REINVESTMENT ACT APPLIES TO THIS PROJECT

In the event that there are product or project details that you would like to discuss further, you may also contact your local BILCO representative (noted below)
Each of our representatives has been factory trained and is fully qualified to answer any questions that you may have.

FOSTER ENGINEERED PRODUCTS
1819 E MORTEN AVE
STE 200
PHOENIX AZ 85020
Phone 602-265-0127
Fax 602-266-0455

QUOTE

The Bilco Company
P.O. Box 1203
New Haven, CT. 06505
(203) 934-6363, Email cs@bilco.com

Date	Quote	Pg
07/17/25	480361	1

THIS QUOTE WILL EXPIRE ON 08/31/25

Cust # 542574

FOSTER ENGINEERED PRODUCTS
1819 E MORTEN AVE
STE 200
PHOENIX AZ 85020
JEN FOSTER
Phone 602-265-0127 Fax 602-266-0455 Email jen@fosterengineered.com

JUNCTION STRUCTURE C

Qty	Product	Description	Weight Pounds	Unit Price	Extension US Dollars
<Main Products>					
1	J-SS H20	BILCO FLOOR/VAULT/SIDEWALK DOOR 3' 0.00 X 6' 8.00 (914mm X 2030mm) HINGED ON 6' 8.00 (2030mm) SIDE Description 1/4" (6.35mm) DIAMOND PATTERN COVER Description DRAINAGE FRAME W/ DRAIN COUPLING Live Load H-20 WHEEL LOAD (OFF-STREET LOCATIONS) Lock STAINLESS STEEL SLAM LOCK Finish MILL FINISH W/ELECTROCHEMICAL PASSIVATION OF WELDS Hdwe 316 STAINLESS STEEL HARDWARE BILCO PART # XJ0095001 HINGED ON THE 6'8" SIDE. MANUFACTURED WITH TYPE 316 STAINLESS STEEL, 1/4" DIAMOND PLATE COVER, 1/4" SMOOTH PLATE FRAME, TYPE 316 STAINLESS STEEL HARDWARE, MILL FINISH WITH ELECTROCHEMICAL PASSIVATION OF WELDS. REINFORCED FOR H-20 LOADING. MODIFIED WITH RECESSED PADLOCK HASP. 8" CHANNEL UNDER FRAME.	1347	13571.55	13571.55 NET
1	PARTS SW	FALL PROTECTION FALL PROTECTION FOR J-SS H20 3'X6'8" UNIT.	49	486.00	486.00 NET
2	J-SS H20	BILCO FLOOR/VAULT/SIDEWALK DOOR 2' 0.00 X 7' 0.00 (609mm X 2135mm) HINGED ON 7' 0.00 (2135mm) SIDE Description 1/4" (6.35mm) DIAMOND PATTERN COVER Description DRAINAGE FRAME W/ DRAIN COUPLING Live Load H-20 WHEEL LOAD (OFF-STREET LOCATIONS) Lock STAINLESS STEEL SLAM LOCK Finish MILL FINISH W/ELECTROCHEMICAL PASSIVATION OF WELDS Hdwe 316 STAINLESS STEEL HARDWARE BILCO PART # XJ0095001 HINGED ON THE 7'0" SIDE. MANUFACTURED WITH TYPE 316 STAINLESS STEEL, 1/4" DIAMOND PLATE COVER, 1/4" SMOOTH PLATE FRAME, TYPE 316 STAINLESS STEEL HARDWARE, MILL FINISH WITH ELECTROCHEMICAL PASSIVATION OF WELDS. REINFORCED FOR H-20 LOADING. MODIFIED WITH RECESSED PADLOCK HASP.	860	8063.55	16127.10 NET

QUOTE

The Bilco Company
P.O. Box 1203
New Haven, CT. 06505
(203) 934-6363, Email cs@bilco.com

Date	Quote	Pg
07/17/25	480361	2

THIS QUOTE WILL EXPIRE ON 08/31/25

Cust # 542574

FOSTER ENGINEERED PRODUCTS
1819 E MORTEN AVE
STE 200
PHOENIX AZ 85020
JEN FOSTER
Phone 602-265-0127 Fax 602-266-0455 Email jen@fosterengineered.com

JUNCTION STRUCTURE C

Qty	Product	Description	Weight Pounds	Unit Price	Extension US Dollars
2	PARTS SW	FALL PROTECTION	37	421.20	842.40 NET

FALL PROTECTION FOR J-SS H20 2'X7' UNIT

**ABOVE PRICE IS NET FOR ALL TYPES OF CUSTOMERS. MAXIMUM DISCOUNT APPLIED.

FOB: FACTORY
FABRICATION TIME:
DUE TO MARKET CONDITIONS RELATED TO MATERIAL AVAILABILITY, LEAD TIME TO BE DETERMINED WHEN PURCHASE ORDER IS RELEASED FOR FABRICATION.

**ADD TO ABOVE PRICE FOR FREIGHT TO EL PASO, TX 79930: $1,309.18 CHR LTL

<Terms>

ALL SALES BY THE BILCO COMPANY ARE GOVERNED BY TERMS AND CONDITIONS ATTACHED TO THIS QUOTATION.
PLEASE MAKE P.O. OUT TO THE BILCO COMPANY AS A SUPPLIER WITH NO RETAINAGE

<Taxes>

Above Pricing Does NOT Include Sales Tax. Sales Tax WILL BE CHARGED Based On The SHIPPING DESTINATION.
IF TAX EXEMPT, PLEASE FORWARD EXEMPTION CERTIFICATE WITH YOUR ORDER

<Exceptions>

Fall Protection Grating System consists of aluminum panel(s) withstain less steel hardware (hinges, hold open latch, and all fasteners). Padlock lug provided for security (padlock by others).
Fall protection system meets OSHA 29 CFR 1926.502(c)

Stainless Steel material is subject to prior sale.Please consult facto ry at time of order for material availability.

Important Note: The above doors are suitable for use in off-street locations where not subjected to high density, fast moving traffic

Support required under frame and shelf -designed and installed by

QUOTE

The Bilco Company
P.O. Box 1203
New Haven, CT. 06505
(203) 934-6363, Email cs@bilco.com

Date	Quote	Pg
07/17/25	480361	3

THIS QUOTE WILL EXPIRE ON 08/31/25

Cust # 542574

FOSTER ENGINEERED PRODUCTS
1819 E MORTEN AVE
STE 200
PHOENIX AZ 85020
JEN FOSTER
Phone 602-265-0127 Fax 602-266-0455 Email jen@fosterengineered.com

JUNCTION STRUCTURE C

Qty	Product	Description	Weight Pounds	Unit Price	Extension US Dollars

others in the field.

If Units Not Released To Fabrication By 08/31/25 Pricing Is Subject To Review

<Notes>

If we are favored with an order, it would be necessary for us to furnish drawings for architectural approval prior to fabrication.

Freight is subject to additional charges for appointment/notification, delivery to construction sites, limited access sites, residential deliveries, lift gates and excessive pallet length (greater than 8').

Price is FOB factory and does not include tax or freight.

Any change or addition to above items as quoted will result in a price change.

If an order is placed for the items quoted above, lead time will be reviewed and may change based on plant capacity & schedule and/or our material suppliers lead times at the time of the order.

Price may be subject to change pending review of specifications and/or details.

Note: Pricing is based on all units being shipped at the same time to the same location.

If Units Not Released To Fabrication By 08/31/25 Pricing Is Subject To Review

PLEASE ADVISE IF THE BUY AMERICAN ACT, THE BUY AMERICA ACT, OR THE AMERICAN RECOVERY AND REINVESTMENT ACT APPLIES TO THIS PROJECT

QUOTE

The Bilco Company
P.O. Box 1203
New Haven, CT. 06505
(203) 934-6363, Email cs@bilco.com

Date	Quote	Pg
07/17/25	480361	4

THIS QUOTE WILL EXPIRE ON 08/31/25

Cust # 542574

FOSTER ENGINEERED PRODUCTS
1819 E MORTEN AVE
STE 200
PHOENIX AZ 85020
JEN FOSTER
Phone 602-265-0127 Fax 602-266-0455 Email jen@fosterengineered.com

JUNCTION STRUCTURE C

Qty	Product	Description	Weight Pounds	Unit Price	Extension US Dollars

In the event that there are product or project details that you would like to discuss further, you may also contact your local BILCO representative (noted below)
Each of our representatives has been factory trained and is fully qualified to answer any questions that you may have.

FOSTER ENGINEERED PRODUCTS
1819 E MORTEN AVE
STE 200
PHOENIX AZ 85020
Phone 602-265-0127
Fax 602-266-0455
Email jen@fosterengineered.com

QUOTE

The Bilco Company
P.O. Box 1203
New Haven, CT. 06505
(203) 934-6363, Email cs@bilco.com

Date	Quote	Pg
07/17/25	480360	1

THIS QUOTE WILL EXPIRE ON 08/31/25

Cust # 542574

FOSTER ENGINEERED PRODUCTS
1819 E MORTEN AVE
STE 200
PHOENIX AZ 85020
JEN FOSTER
Phone 602-265-0127 Fax 602-266-0455 Email jen@fosterengineered.com

JUNCTION STRUCTURE E

Qty	Product	Description	Weight Pounds	Unit Price	Extension US Dollars
<Main Products>					
1	J-SS H20	BILCO FLOOR/VAULT/SIDEWALK DOOR 3' 0.00 X 6' 8.00 (914mm X 2030mm) HINGED ON 6' 8.00 (2030mm) SIDE	1347	16755.00	16755.00
	Description	1/4" (6.35mm) DIAMOND PATTERN COVER			
	Description	DRAINAGE FRAME W/ DRAIN COUPLING			
	Live Load	H-20 WHEEL LOAD (OFF-STREET LOCATIONS)			
	Lock	STAINLESS STEEL SLAM LOCK			
	Finish	MILL FINISH W/ELECTROCHEMICAL PASSIVATION OF WELDS			
	Hdwe	316 STAINLESS STEEL HARDWARE BILCO PART # XJ0095001			
		HINGED ON THE 6'8" SIDE. MANUFACTURED WITH TYPE 316 STAINLESS STEEL, 1/4" DIAMOND PLATE COVER, 1/4" SMOOTH PLATE FRAME, TYPE 316 STAINLESS STEEL HARDWARE, MILL FINISH WITH ELECTROCHEMICAL PASSIVATION OF WELDS. REINFORCED FOR H-20 LOADING. MODIFIED WITH RECESSED PADLOCK HASP. 8" CHANNEL UNDER FRAME.			
1	PARTS SW	FALL PROTECTION	49	600.00	600.00
		FALL PROTECTION FOR J-SS H20 3'X6'8" UNIT.			

FOB: FACTORY
FABRICATION TIME:
DUE TO MARKET CONDITIONS RELATED TO MATERIAL AVAILABILITY, LEAD TIME TO BE DETERMINED WHEN PURCHASE ORDER IS RELEASED FOR FABRICATION.

<Freight>

FREIGHT TO 79930 EL PASO TX FROM ZIP 72472 653.66

Freight is based on units and quantities as quoted above and subject to review based on method of shipment. DOES NOT INCLUDE ALTERNATES.

<Terms>

ALL SALES BY THE BILCO COMPANY ARE GOVERNED BY TERMS AND CONDITIONS ATTACHED TO THIS QUOTATION.
PLEASE MAKE P.O. OUT TO THE BILCO COMPANY AS A SUPPLIER WITH NO RETAINAGE

<Taxes>

Above Pricing Does NOT Include Sales Tax. Sales Tax WILL BE CHARGED
Based On The SHIPPING DESTINATION.
IF TAX EXEMPT, PLEASE FORWARD EXEMPTION CERTIFICATE WITH YOUR ORDER

QUOTE

The Bilco Company
P.O. Box 1203
New Haven, CT. 06505
(203) 934-6363, Email cs@bilco.com

Date	Quote	Pg
07/17/25	480360	2

THIS QUOTE WILL EXPIRE ON 08/31/25

Cust # 542574

FOSTER ENGINEERED PRODUCTS
1819 E MORTEN AVE
STE 200
PHOENIX AZ 85020
JEN FOSTER
Phone 602-265-0127 Fax 602-266-0455 Email jen@fosterengineered.com

JUNCTION STRUCTURE E

Qty	Product	Description	Weight Pounds	Unit Price	Extension US Dollars

<Exceptions>

Fall Protection Grating System consists of aluminum panel(s) withstain less steel hardware (hinges, hold open latch, and all fasteners). Padlock lug provided for security (padlock by others). Fall protection system meets OSHA 29 CFR 1926.502(c)

Stainless Steel material is subject to prior sale.Please consult facto ry at time of order for material availability.

Important Note: The above doors are suitable for use in off-street locations where not subjected to high density, fast moving traffic

Support required under frame and shelf -designed and installed by others in the field.

If Units Not Released To Fabrication By 08/31/25 Pricing Is Subject To Review

<Notes>

Freight is subject to additional charges for appointment/notification, delivery to construction sites, limited access sites, residential deliveries, lift gates and excessive pallet length (greater than 8').

Prices quoted are list.

Price is FOB factory and does not include tax or freight.

Any change or addition to above items as quoted will result in a price change.

If an order is placed for the items quoted above, lead time will be reviewed and may change based on plant capacity & schedule and/or our material suppliers lead times at the time of the order.

Price may be subject to change pending review of specifications and/or details.

If we are favored with an order, it would be necessary for us to furnish drawings for architectural approval prior to fabrication.

QUOTE

The Bilco Company
P.O. Box 1203
New Haven, CT. 06505
(203) 934-6363, Email cs@bilco.com

Date	Quote	Pg
07/17/25	480360	3

THIS QUOTE WILL EXPIRE ON 08/31/25

Cust # 542574

FOSTER ENGINEERED PRODUCTS
1819 E MORTEN AVE
STE 200
PHOENIX AZ 85020
JEN FOSTER
Phone 602-265-0127 Fax 602-266-0455 Email jen@fosterengineered.com

JUNCTION STRUCTURE E

Qty	Product	Description	Weight Pounds	Unit Price	Extension US Dollars

If Units Not Released To Fabrication By 08/31/25 Pricing Is Subject To Review

PLEASE ADVISE IF THE BUY AMERICAN ACT, THE BUY AMERICA ACT, OR THE AMERICAN RECOVERY AND REINVESTMENT ACT APPLIES TO THIS PROJECT

In the event that there are product or project details that you would like to discuss further, you may also contact your local BILCO representative (noted below)
Each of our representatives has been factory trained and is fully qualified to answer any questions that you may have.

FOSTER ENGINEERED PRODUCTS
1819 E MORTEN AVE
STE 200
PHOENIX AZ 85020
Phone 602-265-0127
Fax 602-266-0455
Email jen@fosterengineered.com

JCH NOT SELECTED

Engineered Solutions. Smart Infrastructure.

JAMES, COOKE & HOBSON, INC.

3501 E Broadway Rd, Phoenix, AZ.85040
Phone: 602-586-1439
Fax: 602-276-5402
E-mail egm@jchinc.com

MARCH 18, 2025

To: B&F CONTRACTING

Quotation #: 031825-1EGM

Job Name: CITY OF CHANDLER CMAR 66" SEWER

Attn: TRAVIS MONK

Location: CHANDLER , AZ

Ph:

Quotation by: ED MARTIN

Unless otherwise stated: Prices are firm for 30 days from bid date, payment terms are NET 30 DAYS from shipment. Interest shall accrue at 1.5% per month on past due amounts per month. Any taxes are additional. **Items included are only listed below.** Please review carefully

QTY	DESCRIPTION	TOTAL
1	STAINLESS STEEL TYPE 316 AHD 48" X 84" A-NGLE FRAME, H-20 OCCASIONAL LOADING, D-OUBLE DOOR. OPTIONS INCLUDED: OPEN SPRINGS, SLAMLOCK, OVERSIZED RECESSED PADLOCK, SKIRT FOR 8" TOP SLAB, MILL FINISH.	$20,848.00
2	STAINLESS STEEL TYPE 316 AHD 36" X 80" A-NGLE FRAME, H-20 OCCASIONAL LOADING, D-OUBLE DOOR. OPTIONS INCLUDED: OPEN SPRINGS, SLAMLOCK, OVERSIZED RECESSED PADLOCK, SKIRT FOR 8" TOP SLAB, MILL FINISH.	$36,642.00
3	316SS FRAME AND COVER 24" X 84" FRAME OPENING BOLTED COVER MADE OUT OF 1/4" THICK DIAMOND PLATES FRAME MADE OUT 3 X 3 X 3/8 THICK ANGLE WITH 1/2 X 5 1/2 ANCHORS. LOADING: H-20 - OCCASIONAL TRAFFIC MILL FINISH	$28,277.00
2	316SS FRAME AND COVER 21" X 84" FRAME OPENING BOLTED COVER MADE OUT OF 1/4" THICK DIAMOND PLATES FRAME MADE OUT 3 X 3 X 3/8 THICK ANGLE WITH 1/2 X 5 1/2 ANCHORS. LOADING: H-20 - OCCASIONAL TRAFFIC MILL FINISH	$18,327.00
	ESTIMATED FREIGHT	$2,500.00

NOTES:

- **The above price is firm for 30 days. After such time it may be subject to review. Shipment has been estimated at Approx. 12 - 14 weeks after receipt of purchase order and/or approved submittal drawings.**
- **Price includes: Freight to the job site off loaded by-others. Submittal drawings and start-up supervision.**
- **Prices do not include: Sales tax**
- **Thank you for this opportunity to be of service. If you have any questions regarding this quotation or any other matter, Please do not hesitate to call.**

Pacific Boring

SELECTED BASED ON COMBINED QUALIFICATION AND PRICING SCORING SYSTEM (SEE ATTACHED SCORE SHEET)

P.O. Box 727 Caruthers, Ca. 93609 • **P** 559-864-9444 **F** 559-864-9256

Contractors License Numbers

California Lic: 553794 | DIR 1000003953 | Nevada Lic: 0042398

REFERENCE	**Chandler – 66-Inch Redundant Sewer Project No. 2402.201**
BID DATE	**Revised 7/22/2025 (Original 1/20/2025)**

The following proposal is submitted for your review:

	Description	Size	Quantity	Unit Price	Total
1	Mobilization		1-EA	200,000.00	200,000.00
2	Furnish & Install Bare Casing	86”x1.00”	639-LF	4,245.00	2,712,555.00
Soil Condition: Sandy Clay				**Total Bid**	$2,912,555.00

Special Provisions: Price based on casing quote dated 7/18/25, 90% drawings, no Buy America requirements, PJP weld on casing joints , no conflicts with existing utilities, backfill of existing utilities will not impact tunneling & a scheduled start date of 1/5/2025. Price includes steel rack for Hobas pipe, brick and mortar bulkhead, low density backfill grout and pushing Contractor furnished Hobas pipe. Jacking pit will need high arch doubler spreaders and a backwall capable of 800 tons with no movement.

PRICE INCREASE DUE TO STEEL PRICES. SEE NEXT TWO SHEETS FOR OLD QUOTE COMPARISON TO CURRENT

Jacking Pit:	40’	**L**	16’	**W**	24"	**Below Bottom of Casing**
Receiving Pit:	24’	**L**	14’	**W**	grade”	**Below Bottom of Casing**

Stand-by Crew Rate: $1,497.00 **per hour, for delays beyond control of Pacific Boring (i.e. pit not ready, line and grade staking not available, obstructions, rock, non-borable ground)**

CONTRACTOR TO FURNISH THE FOLLOWING:

1. This quotation will be incorporated into the subcontract between the parties. Pacific Boring will not sign a contract that doesn’t have this quote attached and referenced as included.
2. Bore and Receiving pits shall be to the minimum clear inside dimensions as listed above and will require a vertical clearance from pit floor to walers or cross members of 10-foot minimum & up to 14-foot. Contractor shall consult with Pacific Boring personnel on details of pit design to ensure compatibility of pit and proposed tunneling equipment. In addition to Pacific Borings requirements all pits must comply with OSHA requirements, including landings, handrails, toe boards, etc.
3. Dewatering, as directed by Pacific Boring.
4. Furnish access to Job-site, clear overhead access (no power lines over pits), and traffic control.
5. Provide all required surveying including but not limited to; line and grade staking, surface settlement points and monitoring, survey control, etc.
6. Notify Underground Service Alert 48 hours before commencing bore. Locate all substructures for size, line, and depth prior to starting tunneling operations and specifically hold Pacific Boring, Inc. harmless from all damages of any kind caused by failure to properly locate substructures.
7. Permits, including Cal/Osha classification for all bores 30" and larger to be provided prior to scheduling.
8. Remove spoils from job-site. Pacific Boring to bring to street level.
9. Any required vent pipe, cathodic protection and testing such as, welds, concrete, etc.
10. Furnish carrier pipe or RCP unloaded at job-site with all necessary joint materials, as required.
11. Test and fill carrier pipe with water prior to and during sand or grout backfill of casing.
12. If bond required, Add 1 1/2 %.
13. Pothole existing utilities and confirm elevations are not in conflict with bore.
14. Construction water, concrete washout and sanitary facilities.
15. Pacific Boring shall indemnify and defend the contractor for claims of negligence which arise solely from work performed under the contract to the extent that Pacific Boring is found liable for the claim.
16. *DOES NOT INCLUDE RAILROAD INSURANCE, IF APPLICABLE. Pacific Boring as named insured on Contractor’s Railroad protective liability insurance policy.*
17. Pacific Boring will pour a concrete thrust block in jacking. General Contractor is responsible for removal of thrust block.
18. In the event that this agreement is placed with an attorney to enforce its provisions, the prevailing party shall be entitled to reasonable attorney’s fees and costs.
19. Price based on one move in, additional move ins to be billed at mobilization unit prices provided.
20. Upon execution of contract Pacific Boring will procure materials for your project. If the project is delayed or canceled after scheduling Contractor will be responsible for all specialty material costs and become owner of said materials.
21. Contractor shall provide at least four weeks advance notice of scheduling requirements.
22. If retention is withheld it shall be limited to 5% and shall be paid 60 days after completion of Pacific Borings work.
23. Quote Good for 30-days

Submitted By: Ted Miller **Estimator** Reference # 250120sc.r2

PITTSBURGH PIPE
SINCE 1977

The Right Pipe The Right Services Right On Time

Home Office: 2331 Hampton Ave. St. Louis, MO 63139
Plant: 11 Skyview Dr. Litchfield, IL 62056
Telecom & Power Yard: 501 Gimblin St. Louis, MO 63147
1-800-325-2653 314-383-5300 Fax: 314-383-2322

Quote To	Quote Number
Pacific Boring Steven Gallyer / Ted Miller	200992
Project Description	**Date**
Chandler AZ - 66 in Redundant Sewer	07/18/2025
Terms	**FOB**
1/2% 10 DAYS, NET 30	Chandler AZ
Sales Consultant	**Estimated Ship Date (ARO)**
Marshall Blume	12-15wk MINIMUM Lead times subject to change until order placed

We are pleased to offer the following material for your consideration:

Pcs	Total Feet	Diameter (inches)	Wall Thickness (inches)	Description/Specifications	Length	Price/Ft	Ext. Price
34	680	86 OD X	1.00	A252-2; ROLLED & WELDED; BARE; BEVELED BY SQUARE; 20' UL'S;	20 Ft	$ 898.00	$ 610,640.00
				1-2 MID WELDS; MELT/MANUFACTURE USA; PP TEST REPORTS;			
				All costing, lead time and availability must be verified prior to us accepting an			
				order.			
				Manufacturing begins when we start receiving plate.			
				We will need every bit of 12-15 weeks to make this order.			

UPDATED QUOTE WITH INCREASE

Subtotal $	610,640.00
Estimated Freight $	
Total $	610,640.00

It is the customer's responsibility to inform Pittsburgh Pipe at the time of quotation what, if any, Material specs are required. Customer agrees the material specs listed above meet customer's job specifications.

TERMS & CONDITIONS

Quotation subject to raw material price and availability at time of order
Charges may apply for restocking, cancellation or storage for orders more than 90 days past original ship date.
Special orders are non-cancellable and non-returnable.
All dimensions are nominal, unless otherwise indicated.
All items are offered subject to prior sale, unless otherwise indicated.
Freight is an estimate and is subject to actual cost at time of shipment.

If you have any questions, or if I may be of further assistance, please do not hesitate to call me

Marshall Blume

Marshall Blume
Sales Consultant
314-659-1919
mblume@pittsburghpipe.com

Steven Gallyer / Ted Miller
Pacific Boring

*** Large Diameter Pipe * Bore Casing * Rolled and Welded Pipe * Pipe Piling * Polyethylene Duct**
VISIT OUR WEBSITE AT www.pittsburghpipe.com

The Right Pipe The Right Services Right On Time

*Large Diameter Pipe *Bore Casing *Rolled and Welded Pipe *Fiber Optic Casing *Polyethylene Duct

Date:	01/20/2025
Quote:	00200992 PAC936
To:	Pacific Boring
Attn:	Ted Miller
From:	Kevin Davidson
Reference:	Chandler AZ - 66 in Redundant Sewer

We are pleased to offer the following material for your consideration:

680 F 88 OD; 1.00 WALL; A252-2; ROLLED & WELDED; BARE; BEVELED BY SQUARE; 20' UL'S; 1-2 MID WELDS; MELT/MANUFACTURE USA; PP TEST REPORTS; *L*34@20.00 **at $810.0000 per F**

Delivered Pricing
Pre-tax delivered total: $550,800.oo

OLD QUOTE UTILIZED IN ORIGINAL PACIFIC BORING BID

FOB:	Chandler AZ
Terms:	1/2% 10 DAYS, NET 30
Estimated Ship Date:	8-10 weeks ARO

If you have any questions, or if I may be of further assistance, please do not hesitate to call me.
Charges may apply for restocking, cancellation or storage for orders more than 90 days past original ship date.
Special orders are non-cancellable and non-returnable.
All dimensions are nominal, unless otherwise indicated.
All items are offered subject to prior sale, unless otherwise indicated.

VISIT OUR WEBSITE AT www.pittsburghpipe.com

Kevin Davidson

2331 Hampton Ave. St. Louis, MO 63139 1-800-325-2653 314-383-5300 Fax: 314-383-2322
www.pittsburghpipe.com

Phone: (602) 997-6164 Fax: (602) 997-4811
Website: www.sscunderground.com E-mail: Arvid@sscunderground.com
Contractor's License No. AZ 085634 / CA 1006387 / NM 382037

PROPOSAL

January 16, 2025

Specialized Services Company (SSC), 2001 W. North Lane, Phoenix, Arizona, 85021, proposes to furnish and provide all labor, material, and equipment necessary to complete the following work:

Job Title/Location: **Chandler Redundant Sewer**
Scope of Work: **See Attachment "A"**

Specialized Services Company agrees to complete the work acting as a sub-contractor. The General Contractor is responsible for all taxes related to the gross revenue sale and not the responsibility of Specialized Services Company.

Any alteration or deviation from the specifications contained in this proposal involving extra cost for material, labor, or other expenses resulting from the alteration or deviation from the specification will only be executed upon written orders for same and will require extra charges over the sum quoted in this proposal. All agreements will be made in writing.

Respectfully submitted,

Arvid Veidmark, III
President

Attachment "A"

This Attachment A is specifically incorporated into and made a part of the Proposal between Specialized Services Company and the General Contractor.

This Scope of Work includes:

A. SSC will setup in a bore pit dug and shored by B&F, 40′ long with 16′ wide with arches to provide a minimum 110″ vertical clearance for jacking equipment. The front box needs to be a 10′ x 28′ and the back box 10′ x 12′. SSC will utilize specialized equipment to excavate the soils in front of the leading edge of the 90″ OD x 1″ wall steel casing, 6-12″ at a time and jack the casing into the space. The soil is excavated with a precision process to ensure the bottom third of the casing is riding on the soil to control line and grade with the top 2/3rd is over-excavated to allow for line and grade adjustments as needed. This process is repeated until the casing is parked at 650′. The 88″ ID steel casing is welded with a full circumference weld at each joint as the casing is advanced into the earth. After the casing is parked, the gap between the casing and earth is filled with a neat cement or 6-sack sand slurry to provide a full contact grout. Two key items that we have considered in our plan are the removal of the existing abandoned RCP storm drain and sewer line from inside the tunnel as we advance north of the 202. B&F and SSC will work through the plan to plug these two lines from inside each line to ensure the section to be removed during the tunneling process are secure and empty and SSC will strategically remove the lines while advancing the steel casing. The 66″ flush bell HOBAS will be installed on a railing system to ensure line and grade meet the specification requirements and the annular space will be filled with pea gravel after the 66″ has been accepted for line and grade. The ends of the casing will be sealed with a brick-and-mortar bulkhead.

B. Mobilize jack and bore operation to the job site.

NOTE: PRICING ON MATERIAL GOOD FOR 28 DAYS ONLY, AFTER 28 DAYS PRICE CAN INCREASE BASED ON MARKET CONDITIONS!

Reminder: Budget **$6,800.00** dollars into the job for vacuum utility potholing, the last page list SSC vacuum services.

Schedule of Values

Inclusions	**Price**
A. Horizontal jack and boring machine, labor, welder, excavator, brick and mortar, steel casing, railing, pea gravel, grout for OD of casing.	A. $2,780.00 p/f x 650′ = $1,807,000.00 for L&E $1,125.00 p/f x 650′ = $731,250.00 for 90″ x 1″ wall steel casing.
B. Mobilization	B. $25,500.00 LS

Change Orders:

The parties agree to adjust the scope of work at any time. Such adjustments may include, but not be limited to, extending, deleting, or adding bore paths or footage, and decreasing work schedules by up to five (5) percent without renegotiating the labor rates quoted in this proposal. The General Contractor agrees to compensate SSC for adjustments requiring increased labor hours on the same terms and conditions set forth in the proposal. The General Contractor and SSC will mutually determine how many hours of additional labor are required for such adjustments.

The parties agree to adjust material quantities at any time. Such adjustments may include, but not be limited to decreasing quantities by up to ten (10) percent without renegotiating the material charges quoted in this proposal. The General Contractor agrees to compensate SSC for adjustments requiring increasing material quantities on the same terms and conditions set for the in the proposal. The General Contractor and SSC will mutually determine quantity increases required for such adjustments.

Assumptions:

A. ~~For any bore pit that SSC is proposing to excavate, this is based conventional shore boxes in soils that stand while the pit is being excavated to depth before shoring is set. If the pits are adjacent to an existing trench line or in other soil conditions that will not stand, an alternate method of shoring such as slide rail will need to be evaluated and pricing negotiated, General Contractor may need to take over the digging & shoring.~~

B. SSC crews will work 5 days per week, Monday – Friday, 8 hours on site. Price includes no weekend, night or double shift work.

C. This project is being bid as a Prime Contracting project per Arizona Transaction Privilege Tax law and does not have sales tax included in its material price. An AZ 5005 form is required at contract execution, if one cannot be provided, sales tax on materials will be added to SSC's invoices to General Contractor.

D. SSC is not responsible for any damage to the carrier line in any form or fashion, the General Contractor has the option to provide an operator to jack the carrier line through the steel casing if there is a concern over damage to the carrier line.

E. The General Contractor agrees to provide 24-hour security personnel to safeguard SSC's property against vandalism, theft, and unauthorized use if any of these issues occurs.

F. If unknown utility or structure is encountered and/or if existing AZ-Builts are not true, and these conditions result in the delay of the project or stand-by time, the General Contractor and/or owner will agree to absorb SSC's additional costs.

G. If rock or cobbles are encountered which become too dense for the bore machine to bore through, or if the soil conditions result in a delay of the estimated job completion, the General Contractor agrees to compensate Specialized Services Company for additional labor and materials according to the same terms and conditions set forth in this proposal. The General Contractor and Specialized Service Company will mutually determine in writing additional labor hours, materials, and other resources required for such adjustments.

H. SSC is not responsible for removing or replacing any asphalt or concrete damaged during mobilization, construction or demobilization.

I. The pressure testing of the carrier line is the sole responsibility of the General Contractor and owner. Specialized Services Company is not responsible for any failure of the carrier line regardless of the nature of the failure.

J. The parties agree that Specialized Services Company will not be held responsible or liable for any damage to existing utilities, structures, roadways, or the like caused by cave-ins or flowing material which was not chemically stabilized prior to the bore under any circumstances.

K. The General Contractor agrees to compensate SSC for any costs incurred in mobilizing or for materials ordered if the project is delayed by unforeseen circumstances, including but not limited to, flowing, running caving material.

L. The General Contractor agrees to accept the footages listed by the SSC job foreman on site when bores are completed. The General Contractor's representative may verify and sign-off on footages as bores are completed if on site at the time work is completed.

M. ~~Specialized Services Company will not provide any certified welders or certified welding for the joints of the steel casing.~~

N. Specialized Services Company will not provide coatings or linings of the steel casings.

O. The storm drain and sewer line that are in the bore path are sealed off and ready for SSC to safely tunnel through/remove by the time they are encountered in the bore path.

Exclusions:
Specialized Services Company is not responsible for the following:

A. Traffic control, dead-man tie-off's, fall protection equipment, temporary fencing and barricades

~~B. Any costs or requirements related to work around or under railroad tracks including Railpros, flaggers or observers~~

C. Excavating the bore pit (40' long x 16' wide) and the reception pit as needed by B&F

D. Backfilling of bore and reception pits, all spoils removal, and restoration of landscaping

E. Surveying for proper elevation of casing or carrier line

F. Cost for re-staking hubs regardless of the amount needed to complete the bore & carrier line install

G. De-watering of bore and reception pits and bore line

H. Supply, assembling, and any special equipment to set carrier pipe and install

I. Any cathodic protection, coatings, or linings of the steel casing and poly wrapping of carrier line

J. Removal of any asphalt concrete or metal

K. Boring through any rock, cobbles or unstable material

L. Replacement of asphalt with hot patch or any concrete replacement such as sidewalk or driveways

M. Removal and replacement of any permanent fencing

N. Supply, setup, tear down, and removal of any temporary fencing of entire job site, pits & equipment

O. Permits, bonds and sales taxes (SSC Bond rate 1.5%)

P. Geo-technical reports for SSC and grout company (if necessary)

Q. Chemical grout to stabilize the soil conditions for the project (if necessary)

~~R. Grout to fill any annular space inside the casing~~

S. Construction water and/or fire hydrant hook-ups and any meters

T. Security personnel to protect the job site

U. Inspection or testing of any carrier lines, any equipment needed to set the carrier into the bore pit

V. Pipe fitters, welders, welding machine, linings, wrappings and any items required for the assembly of the carrier line or lines.

W. Coating and lining of the casing

X. SWPPP (Storm Water Pollution Prevention Plan)

Y. Camera and water test of any gravity carrierline

Z. Potholing any utilities crossed by the proposed bore. (SSC can provide this service, see rates on last page)

Attachment "B"

This Attachment B is specifically incorporated into and made a part of the Service Agreement between Specialized Services Company and the Client.

Scope of Work:

A. SSC will provide an air vacuum truck and crew to vacuum excavate and expose utilities or provide vacuum excavation as directed by the Client. SSC will temporarily backfill all holes temporarily with native material. SSC will patch all holes in asphalt or concrete with temporary cold patch.

B. SSC will provide a hydro-excavation truck and 2 man crew to vacuum excavate as directed. Holes will be left open/responsibility of client to backfill and/or cover.

Schedule of Values:

A. Air Excavation (Vacmaster System 4000)

$250.00 per hour portal to portal, 4 hr. min.

B. Hydro Excavation (Truvac HXX)

$285.00 per hour Port to Port (SSC Yard to Jobsite to SSC Yard, includes dump time), 6 hr. min.

Dump Fees – Cost +15% (If onsite dump is not available)
Water Fee - $50/load (If not available onsite)

- If client request that SSC hauls spoils offsite a removal fee of $150.00 will be charged per load.
- SSC will supply the Client with a hand-written Utility Report for each utility located, included in hourly rate.
- All holes in asphalt or concrete will be patched with temporary cold patch and backfilled with native soil unless noted otherwise, backfilling is temporary.
- If requested, SSC can core the holes to be potholed and reinstate the cores. Coring will be billed at $350.00 per pothole.
- If requested, Slurry can be ordered and will be billed at $200.00 per pothole with a $1000.00 per day minimum.
- Any utility we pothole where we encounter slurry backfill or concrete encasement will require 2 holes, one on either side of the encasement to confirm the depth on each side.
- The Client or Owner is responsible for all compaction testing on holes.
- Excludes traffic control, temporary fencing, shoring, permits and barricades.
- Set Control for potholes and provide sealed pothole report is $225.00 per hole, 10 hole minimum.

Note: Billed quantities will be based on actual hours recorded by crews and signed off on by client.

CIP STRUCTURE B
QUOTE (SELECTED)

PROPOSAL

CS CONSTRUCTION, INC.

22023 NORTH 20TH AVENUE
PHOENIX, ARIZONA 85027
PHONE: (623) 889-7650 | FAX: (623) 889-7651
AZ ROC NO. 071662 | A- GENERAL ENGINEERING

PROJECT: LOOP 101 7 202 FREEWAY 66" REDUNDANT SEWER

TO:	B&F CONTRACTING, INC.	PROJECT NO.	WW2402.401
ATTN:	TRAVIS MONK	LOCATION:	CHANDLER, AZ
BID DATE:	7/18/2025	ADDENDUMS:	

ITEM	DESCRIPTION	QUANTITY	UNIT	UNIT PRICE	AMOUNT
1	MOB/DEMOB	1.00	LS	54,010.00	54,010.00
2	FURNISH AND INSTALL JUNCTION STRUCTURE B	1.00	LS	913,120.00	913,120.00

GRAND TOTAL **$967,130.00**

NOTES:

As per 90% plans and specs, we have prepared a proposal on the above referenced project. We propose to furnish all labor, equipment, supervision and materials to complete the following items for the indicated price.

This proposal includes the following:
1. Requirements per Special Instructions To Bidders
2. Prior to starting the 96 Workings Days, C S Construction will need a minimum of 3 months to start the submittal process and purchase long lead items
3. Duration includes 15 Total Working Days of Cure Time. 5 Working Days for the Walls, 5 Working Days for the Grout Fill, and 5 Working Days for the Deck.
4. Time required for Water-Tightness Testing to be added to C S Construction Working Days
5. C S Construction will not be Liable for Delays Caused by Material Provided by Others
6. 1 Mobilization

This proposal excludes the following:
1. Bond, Permits, Sales Tax or Fees
2. Engineering, Testing (including Water-Tightness Testing), and Surveying
3. Excavation
4. Backfill
5. Furnish/Install Bedding Material (if required)
6. All Shoring/Soil Nails for Excavation (if required)
7. Shoring, removal or replacement of existing walls or structures
8. Pipe installation, excavation, encasement, protection, bracing, support, relocation, grouting or cutting
9. Utility adjustments, protect-in-place, and relocations
10. Traffic Control/Dust Control/SWPPP
11. Water Diversion/Water Management/Dewatering
12. Paint, Stain, or Integral Color for Concrete
13. Sealants, caulking, coatings, waterproofing (other than curing compound)
14. Continuous Access to work areas on both sides of structures for equipment/crane/concrete trucks
15. GC to provide secure yard for Materials and Equipment
16. All scope of work not associated with bid items listed/includes

Progress billings shall be submitted by the 30th of the month with payment due by the 15th of the month following. Retention

shall be due to CSCI within 10 days of completion of our work. Sales tax will be invoiced separately unless a signed and completed Arizona Department of Revenue Prime Contractor's Certificate with a valid Transaction Privilege License # is received prior to starting work on this project. If the owner holds retention from the General Contractor, then retention may be held from CS Construction in an equal percentage. Retention must be released 30 days after work has been completed by CS Construction, Inc.

This proposal is valid for a period of thirty (30) days from this date.

Thank you for the opportunity to bid this work. We hope that we may be of service.

Sincerely,
C S CONSTRUCTION, INC.

Stephen Rogers

Digitally signed by Stephen Rogers
Date: 2025.07.18 12:42:51 -07'00'

Stephen Rogers
Estimator

CIP STRUCTURE B QUOTE (NOT SELECTED)

R. DUGAN CONSTRUCTION INC

Storm Drains & Concrete Structures

Bid

Bid# 25-058 R-1

CA. LIC # 621586
AZ. LIC # ROC 253213
DIR # 1000007798
DBE # 39828
PHONE(951)360-7531
FAX (951)360-7561
www.rduganconst.com

Attn: Travis Monk
Date: 07/18/25

Job: Redundant Sewer Project, City of Chandler, AZ

Item #	Description	Quan.	Units	Working Days	Price	Amount
	Junction Structure B per Detail on Sheet S-2.0, S-2.1, S-3.0 & S-3.1 ***CONCRETE & REBAR ONLY* *CAST-IN-PLACE HARDWARE SET BY R. DUGAN* *BOLTED HARDWARE SET BY OTHERS***					
	Box 33.00' x 29.11' x 24.46'	1.00	Ea			
	Grout - 900.77 sqft ***INSIDE GROUT CHANNEL BY R. DUGAN ONLY***	72.00	CY			
		1.00	LS	47	$ 1,336,898.00	$ 1,336,898.00
					Total	$ 1,336,898.00

Excludes:
Excavation, Backfill, Compaction, Demo, Removals, Survey, Testing, Permits, Rip Rap, Traffic Control, Erosion Control Dewatering, Stencils, Placards, Waterproofing, Bonds, Fossil Filters, Stamps and Fencing.

Notes:
01. Must have 12' access road to all structures.
02. Colored concrete not included unless otherwise noted.
03. Concrete washout pits supplied by others.
04. This proposal is good for 30 days, if awarded after the 30 days price may need to be adjusted.
05. Please add 2.5% if bond is required. To be paid in full. No retention held.
06. Bid is good for standard daytime work hours and does not include night-time or weekend work.
07. Concrete is compliant with AB 219.
08. Cast-in-Place hardware set by R. Dugan.
09. Bolted hardware set by others.
10. Inside grout channel by R. Dugan only.

Contract:
This proposal is good for 30 days. if awarded after 30 days prices may need to be adjusted. Should this proposal be accepted, and if our company must pursue the collection of monies due for work performed, we shall be entitled to recover our attorneys fees and court costs.
Proposal is made from Emailed Request, based on **Prevailing** rates, and standard insurance (GL) of $ 5,000,000.
If this proposal results in a contract, please give us as much time (1 Week) as possible so we can schedule our crews to accommodate your needs.

Please accept this proposal for the work described above. If this is acceptable, please sign and fax back along with the legal information, your job number and / or a Purchase Order Number.

R. Dugan Construction, Inc.
Marcos Cordova
(951) 360-7531 x 26

B&F Contracting, Inc

Sign. _____

Date _____

1575 W Horizon Ridge Parkway
#530427
Henderson, NV 89012

207 Heritage Court
Sulphur Springs, TX 75482

1708 Turkey Creek Road
Plant City, FL 33566

702-824-9702
www.armorock.com

Quote Date: 7/23/2025

To: All Bidders

Reference: Price Road 66" Rehab (Insert Material)
Chandler, AZ
Maricopa County

Sales Manager: Nicholas Drago

Q U O T A T I O N

Notes:

1. Quote is subject to our standard terms, conditions, and shipping policies.
2. Payment is due at Net 30. Late Payment service charge for over 30 days will be charged at 18% APR
3. Quote is valid for 60 days from issue date to receipt of PO after 60 days quote is subject to change based off market value of materials.
4. Sales tax not included. All applicable taxes are to be paid by purchaser
5. If owner requires items to be grouted in field contractor is responsible for materials and labor costs incurred.
6. All loads will be billed at $2,000 for each legal load out of Boulder City, NV, $5,300 for each legal load out of Sulphur Springs, TX, $6,500 for 208" troughing out of Sulphur Springs, TX, $5,850 for each oversized load at 108" out of SS, $22,500 for each oversized load at 208" out of SS. Total of 12 legal loads (BC), 1 legal loads (SS), 4 oversized for troughing loads (SS), 2 oversized loads at 108" (SS), and 11 oversized loads at 208" (SS) needed for job. Customer will only be billed for trucks used. Additional trucks will be billed at market rate.
7. Freight requested under 3 days notice may be subject to increased freight rates
8. Products will be billed at unit pricing per quotation
9. Rush orders will be priced accordingly.
10. Contractor shall be responsible for joint sealing and performance.
11. Miscellaneous items such as grout, epoxy, and hardware are not included with the structures unless a specific line item is shown on this quote. Additional charges will apply for any extra items that are not shown on this quote.
12. Final lead time is determined at date of approved submittal.
13. Project retention is not allowed.
14. Summation of structure price is for convenience of bidding only. Structures will be billed by components per quotation detail.

From: JJohnson

ARMOROCK™

1575 W Horizon Ridge Parkway
#530427
Henderson, NV 89012

207 Heritage Court
Sulphur Springs, TX 75482

1708 Turkey Creek Road
Plant City, FL 33566

702-824-9702
www.armorock.com

For: All Bidders

Ref: Price Road 66" Rehab (Insert Material)
Chandler, AZ
Maricopa County

Quote Date: 7/23/2025

Structure	Description	Height	Weight	Price
84" CIP	**84"-30" Polymer Manhole**	**19.55'**	**26,800**	**$54,580**

1	PR30X2FN	30 IN X 2 IN FINISH PRO-RING	1	PR30X4G	30 IN X 4 IN GRADE PRO-RING
1	MHL8430	84 IN ECC POLYMER LID FLAT W/ 30" ACCESS	1	MHS8424	84 IN X 2 FT POLYMER MH SECTION
1	MHS8460	84 IN X 5 FT POLYMER MH SECTION	1	MHS8472	84 IN X 6 FT POLYMER MH SECTION
1	MHS8424NB	84 IN X 2 FT POLYMER MH SECTION NO BELL	16	MASJ	1.25 IN X 14 FT JOINT MASTIC ROLL

Insert MH 756004800	**60" Polymer Rehab**	**18.68'**	**6,510**	**$13,460**	

1	MHGR30X5	30 IN X 5 IN POLYMER GRADE RING	1	MHGR30X6	30 IN X 6 IN POLYMER GRADE RING
1	MHTLC3630	36 IN CONCENTRIC POLYMER TRANSITION LID W/ 30" ACCESS	1	RMHC6036	60 IN X 3 FT ECC POLYMER CONE - REHAB W/ 36" ACCESS
1	RMH6036	60 IN X 3 FT POLYMER MH SECTION - REHAB	2	RMH6048	60 IN X 4 FT POLYMER MH SECTION - REHAB
6	MASJ	1.25 IN X 14 FT JOINT MASTIC ROLL	1	PGROUT	POLYMER GROUT KIT

Insert MH 756005162	**60" Polymer Rehab**	**17.54'**	**6,010**	**$12,460**	

1	MHGR30X3	30 IN X 3 IN POLYMER GRADE RING	1	MHGR30X6	30 IN X 6 IN POLYMER GRADE RING
1	MHTLC3630	36 IN CONCENTRIC POLYMER TRANSITION LID W/ 30" ACCESS	1	RMHC6036	60 IN X 3 FT ECC POLYMER CONE - REHAB W/ 36" ACCESS
1	RMH6024	60 IN X 2 FT POLYMER MH SECTION - REHAB	2	RMH6048	60 IN X 4 FT POLYMER MH SECTION - REHAB
6	MASJ	1.25 IN X 14 FT JOINT MASTIC ROLL	1	PGROUT	POLYMER GROUT KIT

Insert MH 756005216	**60" Polymer Rehab**	**9.66'**	**3,310**	**$6,940**	

1	MHGR30X5	30 IN X 5 IN POLYMER GRADE RING	1	MHGR30X6	30 IN X 6 IN POLYMER GRADE RING
1	MHTLC3630	36 IN CONCENTRIC POLYMER TRANSITION LID W/ 30" ACCESS	1	RMHC6036	60 IN X 3 FT ECC POLYMER CONE - REHAB W/ 36" ACCESS
1	RMH6024	60 IN X 2 FT POLYMER MH SECTION - REHAB	2	MASJ	1.25 IN X 14 FT JOINT MASTIC ROLL
1	PGROUT	POLYMER GROUT KIT			

Insert MH 756009519	**60" Polymer Rehab**	**18.51'**	**6,410**	**$13,260**	

1	MHGR30X3	30 IN X 3 IN POLYMER GRADE RING	1	MHGR30X6	30 IN X 6 IN POLYMER GRADE RING
1	MHTLC3630	36 IN CONCENTRIC POLYMER TRANSITION LID W/ 30" ACCESS	1	RMHC6036	60 IN X 3 FT ECC POLYMER CONE - REHAB W/ 36" ACCESS
1	RMH6036	60 IN X 3 FT POLYMER MH SECTION - REHAB	2	RMH6048	60 IN X 4 FT POLYMER MH SECTION - REHAB
6	MASJ	1.25 IN X 14 FT JOINT MASTIC ROLL	1	PGROUT	POLYMER GROUT KIT

Insert MH 756020514	**60" Polymer Rehab**	**30.25'**	**10,470**	**$21,560**	

1	MHGR30X6	30 IN X 6 IN POLYMER GRADE RING	1	MHTLC3630	36 IN CONCENTRIC POLYMER TRANSITION LID W/ 30" ACCESS
1	RMHC6036	60 IN X 3 FT ECC POLYMER CONE - REHAB W/ 36" ACCESS	1	RMH6036	60 IN X 3 FT POLYMER MH SECTION - REHAB
5	RMH6048	60 IN X 4 FT POLYMER MH SECTION - REHAB	12	MASJ	1.25 IN X 14 FT JOINT MASTIC ROLL
1	PGROUT	POLYMER GROUT KIT			

Insert MH 756023918	**60" Polymer Rehab**	**23.30'**	**8,020**	**$16,540**	

1	MHGR30X3	30 IN X 3 IN POLYMER GRADE RING	1	MHGR30X4	30 IN X 4 IN POLYMER GRADE RING
1	MHTLC3630	36 IN CONCENTRIC POLYMER TRANSITION LID W/ 30" ACCESS	1	RMHC6036	60 IN X 3 FT ECC POLYMER CONE - REHAB W/ 36" ACCESS
4	RMH6048	60 IN X 4 FT POLYMER MH SECTION - REHAB	8	MASJ	1.25 IN X 14 FT JOINT MASTIC ROLL
1	PGROUT	POLYMER GROUT KIT			

ARMOROCK™

1575 W Horizon Ridge Parkway
#530427
Henderson, NV 89012

207 Heritage Court
Sulphur Springs, TX 75482

1708 Turkey Creek Road
Plant City, FL 33566

702-824-9702
www.armorock.com

For: All Bidders

Ref: Price Road 66" Rehab (Insert Material)
Chandler, AZ
Maricopa County

Quote Date: 7/23/2025

Structure	Description	Height	Weight	Price
Insert MH 756023919	**60" Polymer Rehab**	**23.23'**	**7,970**	**$16,440**

1	MHGR30X6	30 IN X 6 IN POLYMER GRADE RING	1	MHTLC3630	36 IN CONCENTRIC POLYMER TRANSITION LID W/ 30" ACCESS
1	RMHC6036	60 IN X 3 FT ECC POLYMER CONE - REHAB W/ 36" ACCESS	4	RMH6048	60 IN X 4 FT POLYMER MH SECTION - REHAB
8	MASJ	1.25 IN X 14 FT JOINT MASTIC ROLL	1	PGROUT	POLYMER GROUT KIT

Insert MH 756023920	**60" Polymer Rehab**	**33.42'**	**11,570**	**$23,820**

1	MHGR30X2	30 IN X 2 IN POLYMER GRADE RING	1	MHGR30X6	30 IN X 6 IN POLYMER GRADE RING
1	MHTLC3630	36 IN CONCENTRIC POLYMER TRANSITION LID W/ 30" ACCESS	1	RMHC6036	60 IN X 3 FT ECC POLYMER CONE - REHAB W/ 36" ACCESS
1	RMH6024	60 IN X 2 FT POLYMER MH SECTION - REHAB	6	RMH6048	60 IN X 4 FT POLYMER MH SECTION - REHAB
14	MASJ	1.25 IN X 14 FT JOINT MASTIC ROLL	1	PGROUT	POLYMER GROUT KIT

MH 01 STA 99+03.81	**96"-Reduced-36" Polymer Manhole**	**23.05'**	**44,530**	**$88,840**

1	MHGR30X4	30 IN X 4 IN POLYMER GRADE RING	1	MHGR30X5	30 IN X 5 IN POLYMER GRADE RING
1	MHC6030	60 IN X 3 FT ECC POLYMER CONE W/ 30" ACCESS	1	MHS6072	60 IN X 6 FT POLYMER MH SECTION
1	MHS6060NB	60 IN X 5 FT POLYMER MH SECTION NO BELL	1	MHTL9660	96 IN ECC POLYMER TRANSITION LID W/ 60" ACCESS
1	MHB9696.133	96 IN X 8 FT POLYMER PRECAST BASE FULL PLUS DEPTH TROUGHING	2		S206-74
3	60" Joint Gasket	60" JOINT GASKET	10	MASJ	1.25 IN X 14 FT JOINT MASTIC ROLL
1	96" Joint Gasket	96" JOINT GASKET			

MH 02 STA 701+21.86	**96"-Reduced-36" Polymer Manhole**	**23.14'**	**44,580**	**$88,940**

2	MHGR30X5	30 IN X 5 IN POLYMER GRADE RING	1	MHC6030	60 IN X 3 FT ECC POLYMER CONE W/ 30" ACCESS
1	MHS6060	60 IN X 5 FT POLYMER MH SECTION	1	MHS6072NB	60 IN X 6 FT POLYMER MH SECTION NO BELL
1	MHTLC9660	96 IN CONCENTRIC POLYMER TRANSITION LID W/ 60" ACCESS	1	MHB9696.133	96 IN X 8 FT POLYMER PRECAST BASE FULL PLUS DEPTH TROUGHING
2		S206-74	3	60" Joint Gasket	60" JOINT GASKET
10	MASJ	1.25 IN X 14 FT JOINT MASTIC ROLL	1	96" Joint Gasket	96" JOINT GASKET

MH 03 STA 102+33.52	**96"-Reduced-36" Polymer Manhole**	**22.79'**	**44,380**	**$88,540**

1	MHGR30X6	30 IN X 6 IN POLYMER GRADE RING	1	MHC6030	60 IN X 3 FT ECC POLYMER CONE W/ 30" ACCESS
1	MHS6072	60 IN X 6 FT POLYMER MH SECTION	1	MHS6060NB	60 IN X 5 FT POLYMER MH SECTION NO BELL
1	MHTL9660	96 IN ECC POLYMER TRANSITION LID W/ 60" ACCESS	1	MHB9696.133	96 IN X 8 FT POLYMER PRECAST BASE FULL PLUS DEPTH TROUGHING
2		S206-74	3	60" Joint Gasket	60" JOINT GASKET
10	MASJ	1.25 IN X 14 FT JOINT MASTIC ROLL	1	96" Joint Gasket	96" JOINT GASKET

MH 04 STA 200+00.00	**96"-Reduced-36" Polymer Manhole**	**22.44'**	**48,400**	**$96,065**

1	MHGR30X2	30 IN X 2 IN POLYMER GRADE RING	1	MHC6030	60 IN X 3 FT ECC POLYMER CONE W/ 30" ACCESS
1	MHS6072	60 IN X 6 FT POLYMER MH SECTION	1	MHS6060NB	60 IN X 5 FT POLYMER MH SECTION NO BELL
1	MHTL9660	96 IN ECC POLYMER TRANSITION LID W/ 60" ACCESS	1	MHB9696.133	96 IN X 8 FT POLYMER PRECAST BASE FULL PLUS DEPTH TROUGHING
1		S206-54L BOOT	1		S206-74
3	60" Joint Gasket	60" JOINT GASKET	10	MASJ	1.25 IN X 14 FT JOINT MASTIC ROLL
1	96" Joint Gasket	96" JOINT GASKET			

Spreader Bar		**0.00'**	**0**	**$3,680**

1	RMH60SPREADER	60" REHAB SPREADER BAR	1	Spreader Bar Kit-48"-72"	SPREADER BAR & RIGGING

ARMOROCK™

1575 W Horizon Ridge Parkway
#530427
Henderson, NV 89012

207 Heritage Court
Sulphur Springs, TX 75482

1708 Turkey Creek Road
Plant City, FL 33566

702-824-9702
www.armorock.com

For: All Bidders

Ref: Price Road 66" Rehab (Insert Material)
Chandler, AZ
Maricopa County

Quote Date: 7/23/2025

Structure	Description	Height	Weight	Price
Structure C Full Depth+	**192" Polymer Manhole**	**22.62'**	**271,700**	**$561,245**

1	MHL19230	192 IN ECC SPLIT POLYMER LID FLAT W/ 30" ACCESS	1	MHS19272	192 IN X 6 FT POLYMER MH SECTION
1	MHS19296	192 IN X 8 FT POLYMER MH SECTION	1	MHS19296H	192 IN X 8 FT POLYMER MH SECTION W/ CORED HOLE
3		S206-74	1	MHB19215.133	192 IN X 1 FT 3 IN POLYMER PRECAST BASE FULL PLUS DEPTH TROUGHING
72	MASJ	1.25 IN X 14 FT JOINT MASTIC ROLL	3	Gasket	GASKET FOR 192" MANHOLE JOINTS
1		LABOR FOR FIELD GROUTING	1	PGROUT	POLYMER GROUT KIT

Structure D	**84" Hatch Polymer Manhole**	**19.79'**	**31,140**	**$53,160**

1		30" CITY OF CHANDLER SEWER A-1700 R&C	1	MHGR30X3	30 IN X 3 IN POLYMER GRADE RING
1	MHC6030	60 IN X 3 FT ECC POLYMER CONE W/ 30" ACCESS	1	MHS6060	60 IN X 5 FT POLYMER MH SECTION
1	MHS6060NB	60 IN X 5 FT POLYMER MH SECTION NO BELL	1	MHTL8460	84 IN ECC POLYMER TRANSITION LID W/ 60" ACCESS
1	MHB8473.133	84 IN X 6 FT 1 IN POLYMER PRECAST BASE FULL PLUS DEPTH TROUGHING	2		S206-54L BOOT
10	MASJ	1.25 IN X 14 FT JOINT MASTIC ROLL	3	Gasket	GASKET FOR 192" MANHOLE JOINTS
2	Gasket	GASKET FOR 48" MANHOLE JOINTS	1	PGROUT	POLYMER GROUT KIT

Structure E Full Depth +	**192" Polymer Manhole**	**22.21'**	**271,800**	**$552,735**

1		30" CITY OF CHANDLER SEWER A-1700 R&C	1	MHL19230	192 IN ECC SPLIT POLYMER LID FLAT W/ 30" ACCESS
1	MHS19267	192 IN X 5 FT 7 IN POLYMER MH SECTION	1	MHS19296	192 IN X 8 FT POLYMER MH SECTION
1	MHS19296H	192 IN X 8 FT POLYMER MH SECTION W/ CORED HOLE	3		S206-74
1	MHB19215.133	192 IN X 1 FT 3 IN POLYMER PRECAST BASE FULL PLUS DEPTH TROUGHING	72	MASJ	1.25 IN X 14 FT JOINT MASTIC ROLL
3	Gasket	GASKET FOR 192" MANHOLE JOINTS	1		LABOR FOR FIELD GROUTING
1	PGROUT	POLYMER GROUT KIT			

Tee 756004806	**48"-30" Polymer Manhole**	**17.40'**	**6,050**	**$12,752**

1	MHGR30X4	30 IN X 4 IN POLYMER GRADE RING	1	MHGR30X5	30 IN X 5 IN POLYMER GRADE RING
1	MHL4830	48 IN ECC POLYMER LID FLAT W/ 30" ACCESS	1	MHS4848	48 IN X 4 FT POLYMER MH SECTION
1	MHS4872	48 IN X 6 FT POLYMER MH SECTION	1	MHS4812NB	48 IN X 1 FT POLYMER MH SECTION NO BELL
3	MASJ	1.25 IN X 14 FT JOINT MASTIC ROLL			

Tee 756007414	**60"-30" Polymer Manhole w/36" Tee**	**35.46'**	**14,040**	**$29,120**

1	MHGR30X5	30 IN X 5 IN POLYMER GRADE RING	1	MHC6030	60 IN X 3 FT ECC POLYMER CONE W/ 30" ACCESS
4	MHS6072	60 IN X 6 FT POLYMER MH SECTION	1	56003-TL	36 IN TEE ADAPTOR 60 IN
10	MASJ	1.25 IN X 14 FT JOINT MASTIC ROLL			

Tee 756009377	**60"-30" Polymer Manhole w/36" Tee**	**15.70'**	**5,290**	**$11,440**

1	MHGR30X4	30 IN X 4 IN POLYMER GRADE RING	1	MHC6030	60 IN X 3 FT ECC POLYMER CONE W/ 30" ACCESS
1	MHS6072	60 IN X 6 FT POLYMER MH SECTION	1	56003-TL	36 IN TEE ADAPTOR 60 IN
4	MASJ	1.25 IN X 14 FT JOINT MASTIC ROLL			

Tee 756009378	**48"-30" Polymer Manhole**	**20.82'**	**7,750**	**$16,325**

1	MHGR30X3	30 IN X 3 IN POLYMER GRADE RING	2	MHGR30X6	30 IN X 6 IN POLYMER GRADE RING
1	MHL4830	48 IN ECC POLYMER LID FLAT W/ 30" ACCESS	1	MHS4812	48 IN X 1 FT POLYMER MH SECTION
2	MHS4872	48 IN X 6 FT POLYMER MH SECTION	1	MHS4812NB	48 IN X 1 FT POLYMER MH SECTION NO BELL
4	MASJ	1.25 IN X 14 FT JOINT MASTIC ROLL			

ARMOROCK™

1575 W Horizon Ridge Parkway
#530427
Henderson, NV 89012

207 Heritage Court
Sulphur Springs, TX 75482

1708 Turkey Creek Road
Plant City, FL 33566

702-824-9702
www.armorock.com

For: All Bidders

Ref: Price Road 66" Rehab (Insert Material)
Chandler, AZ
Maricopa County

Quote Date: 7/23/2025

Structure	Description	Height	Weight	Price
Tee 756011281	**48"-30" Polymer Manhole**	**18.06'**	**6,250**	**$13,182**

1 MHGR30X3	30 IN X 3 IN POLYMER GRADE RING	1 MHGR30X4	30 IN X 4 IN POLYMER GRADE RING
1 MHL4830	48 IN ECC POLYMER LID FLAT W/ 30" ACCESS	1 MHS4860	48 IN X 5 FT POLYMER MH SECTION
1 MHS4872	48 IN X 6 FT POLYMER MH SECTION	1 MHS4812NB	48 IN X 1 FT POLYMER MH SECTION NO BELL
3 MASJ	1.25 IN X 14 FT JOINT MASTIC ROLL		

Tee 756013317	**48"-30" Polymer Manhole**	**19.13'**	**6,650**	**$14,022**

1 MHGR30X3	30 IN X 3 IN POLYMER GRADE RING	1 MHGR30X4	30 IN X 4 IN POLYMER GRADE RING
1 MHL4830	48 IN ECC POLYMER LID FLAT W/ 30" ACCESS	2 MHS4872	48 IN X 6 FT POLYMER MH SECTION
1 MHS4812NB	48 IN X 1 FT POLYMER MH SECTION NO BELL	3 MASJ	1.25 IN X 14 FT JOINT MASTIC ROLL

Sub-Total	**$1,809,106**
Freight/Delivery	**$314,500**
Total Price for Price Road 66" Rehab (Insert Material)	**$2,123,606**

ARMOROCK™

1575 W Horizon Ridge Parkway
#530427
Henderson, NV 89012

207 Heritage Court
Sulphur Springs, TX 75482

1708 Turkey Creek Road
Plant City, FL 33566

702-824-9702
www.armorock.com

APPROVED BY: _____

Structure: 84" CIP
Job Number: AZ2402
Job Name: Price Road 66" Rehab (Insert Material)
Job Location: Chandler, AZ
Maricopa County
Contractor: All Bidders
Agency:
Engineer:

Based on:
Take Off By: 7/23/2025 JoshuaJohnson

Design Build Height		
Rim	+	1,184.91'
Outlet Invert	-	1,165.36'
Design Height	=	19.55'
Pipe Inner Dia.	-	2.60'
Pipe Wall	-	0.03'
Pour Above	-	0.17'
Above Base	=	16.75'

Stack Build Height		
Ring	+	0.39'
Adjustment	+	0.53'
Eccentric Slab	+	0.83'
Risers	+	15.00'
Above Base	=	16.75'
Contractor Base	+	2.80'
Design Height	=	19.55'

Ship Date:
Ring: 30" City of Chandler CAP R&C By Others
Channel: BASE POURED IN FIELD BY CONTRACTOR
Reduction:
Notes:

Openings

ID	Invert	Pipe Size	Connector	Hole Size	Angle	To CL	Top to Top	Hole Former
#1	1165.36'	30" Ductile Iron	In 84 IN CIP Base	N/A	0°	18"	0"	30 DIP
#2	1165.36'	30" Ductile Iron	In 84 IN CIP Base	N/A	180°	18"	0"	30 DIP

Elevation (View A-A)

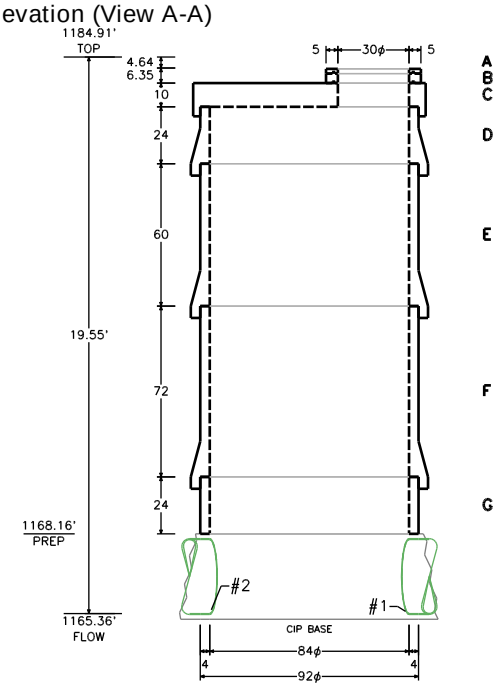

Plan View

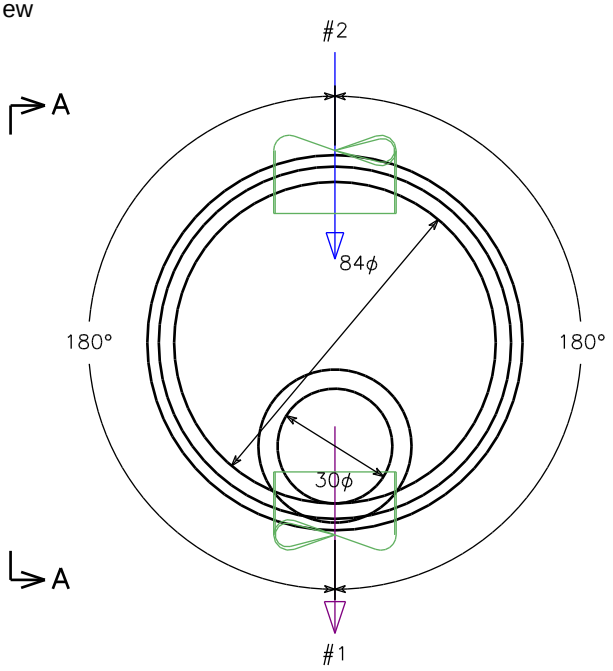

BOM For Stack

ID	Description	Part Number	Qty.	Weight
	1.25 IN X 14 FT JOINT MASTIC ROLL	MASJ	16	
A	30 IN X 2 IN FINISH PRO-RING	PR30X2FN	1	
B	30 IN X 4 IN GRADE PRO-RING	PR30X4G	1	
C	84 IN ECC POLYMER LID FLAT W/ 30" ACCESS	MHL8430	1	6,100
D	84 IN X 2 FT POLYMER MH SECTION	MHS8424	1	3,500
E	84 IN X 5 FT POLYMER MH SECTION	MHS8460	1	6,900
F	84 IN X 6 FT POLYMER MH SECTION	MHS8472	1	8,000
G	84 IN X 2 FT POLYMER MH SECTION NO BELL	MHS8424NB	1	2,300
	Totals (precast, lbs.)		7	26,800

ARMOROCK™

1575 W Horizon Ridge Parkway
#530427
Henderson, NV 89012

207 Heritage Court
Sulphur Springs, TX 75482

1708 Turkey Creek Road
Plant City, FL 33566

702-824-9702
www.armorock.com

APPROVED BY: _____

Structure: Insert MH 756004800
Job Number: AZ2402
Job Name: Price Road 66" Rehab (Insert Material)
Job Location: Chandler, AZ
Maricopa County
Contractor: All Bidders
Agency:
Engineer:

Based on:
Take Off By: 7/17/2025 PMcRae

Design Build Height

Top of Casting	+	1,182.65'
Outlet Invert	-	1,163.97'
Design Height	=	18.68'
Pipe Inner Dia.	-	2.60'
Pipe Wall	-	0.03'
Pour Above	-	0.17'
Above Base	=	15.88'

Stack Build Height

Ring	+	0.39'
Adjustment	+	0.99'
Concentric Slab	+	0.50'
Eccentric Cone	+	3.00'
Risers	+	11.00'
Above Base	=	15.88'
Contractor Base	+	2.80'
Design Height	=	18.68'

Ship Date:
Ring: 30" City of Chandler CAP R&C By Others
Channel: BASE POURED IN FIELD BY CONTRACTOR
Reduction:
Notes:

Openings

ID	Invert	Pipe Size	Connector	Hole Size	Angle	To CL	Top to Top	Hole Former
#1	1163.97'	30" Ductile Iron	In 53 IN Rehab Base	N/A	0°	18"	0"	30 DIP
#2	1163.97'	30" Ductile Iron	In 53 IN Rehab Base	N/A	130°	18"	0"	30 DIP

Elevation (View A-A)

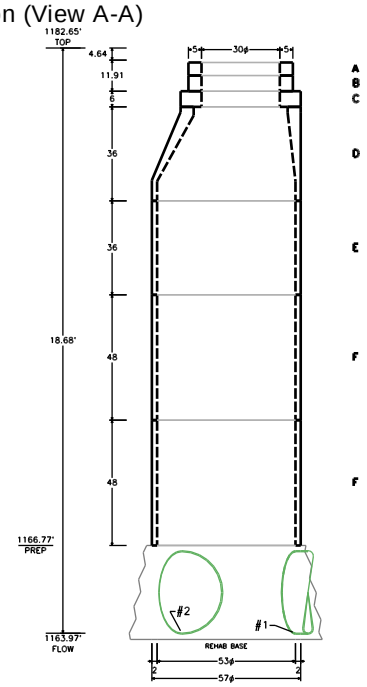

Plan View

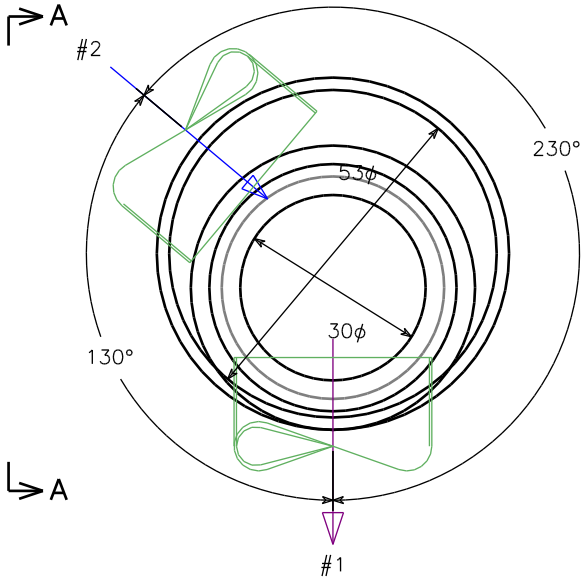

BOM For Stack

ID	Description	Part Number	Qty.	Weight
	POLYMER GROUT KIT	PGROUT	1	
	1.25 IN X 14 FT JOINT MASTIC ROLL	MASJ	6	
A	30 IN X 5 IN POLYMER GRADE RING	MHGR30X5	1	240
B	30 IN X 6 IN POLYMER GRADE RING	MHGR30X6	1	280
C	36 IN CONCENTRIC POLYMER TRANSITION LID W/ 30" ACCESS	MHTLC3630	1	490
D	60 IN X 3 FT ECC POLYMER CONE - REHAB W/ 36" ACCESS	RMHC6036	1	1,600
E	60 IN X 3 FT POLYMER MH SECTION - REHAB	RMH6036	1	1,100
F	60 IN X 4 FT POLYMER MH SECTION - REHAB	RMH6048	2	2,800
	Totals (precast, lbs.)		7	6,510

ARMOROCK™

1575 W Horizon Ridge Parkway
#530427
Henderson, NV 89012

207 Heritage Court
Sulphur Springs, TX 75482

1708 Turkey Creek Road
Plant City, FL 33566

702-824-9702
www.armorock.com

APPROVED BY: _____

Structure: Insert MH 756005162
Job Number: AZ2402
Job Name: Price Road 66" Rehab (Insert Material)
Job Location: Chandler, AZ
Maricopa County
Contractor: All Bidders
Agency:
Engineer:

Based on:
Take Off By: 7/17/2025 PMcRae

Design Build Height

Top of Casting	+	1,184.03'
Outlet Invert	-	1,166.49'
Design Height	=	17.54'
Pipe Inner Dia.	-	2.46'
Pipe Wall	-	0.24'
Pour Above	-	0.17'
Above Base	=	14.67'

Stack Build Height

Ring	+	0.39'
Adjustment	+	0.78'
Concentric Slab	+	0.50'
Eccentric Cone	+	3.00'
Risers	+	10.00'
Above Base	=	14.67'
Contractor Base	+	2.87'
Design Height	=	17.54'

Ship Date:
Ring: 30" City of Chandler CAP R&C By Others
Channel: BASE POURED IN FIELD BY CONTRACTOR
Reduction:
Notes:

Openings

ID	Invert	Pipe Size	Connector	Hole Size	Angle	To CL	Top to Top	Hole Former
#1	1166.49'	30" Ductile Iron	In 53 IN Rehab Base	N/A	0°	20.54"	0.85"	30 DIP
#2	1166.49'	30" Vitrified Clay	In 53 IN Rehab Base	N/A	126°	19.69"	-0.31"	30 VCP

Elevation (View A-A)

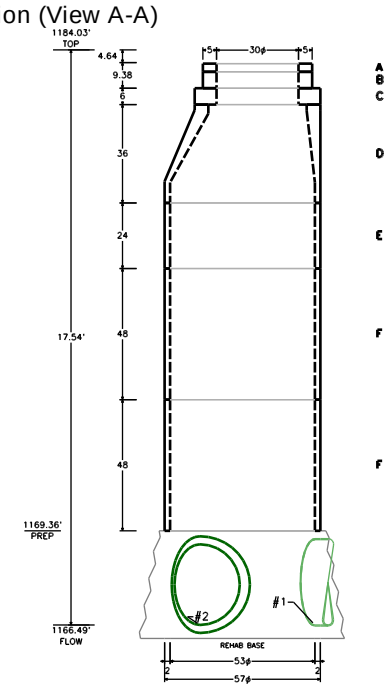

Plan View

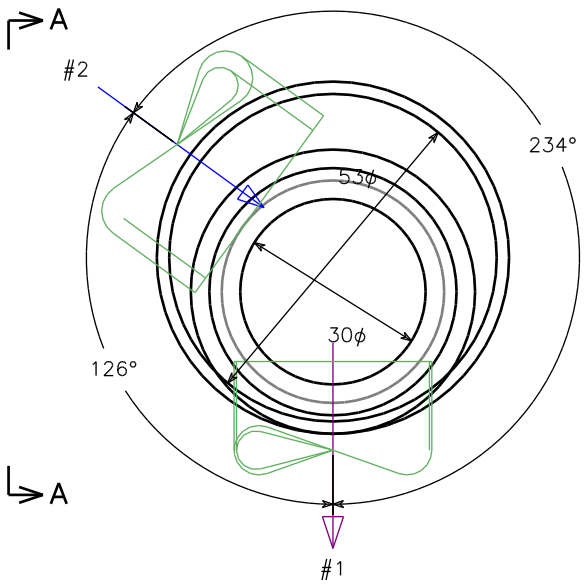

BOM For Stack

ID	Description	Part Number	Qty.	Weight
	POLYMER GROUT KIT	PGROUT	1	
	1.25 IN X 14 FT JOINT MASTIC ROLL	MASJ	6	
A	30 IN X 3 IN POLYMER GRADE RING	MHGR30X3	1	140
B	30 IN X 6 IN POLYMER GRADE RING	MHGR30X6	1	280
C	36 IN CONCENTRIC POLYMER TRANSITION LID W/ 30" ACCESS	MHTLC3630	1	490
D	60 IN X 3 FT ECC POLYMER CONE - REHAB W/ 36" ACCESS	RMHC6036	1	1,600
E	60 IN X 2 FT POLYMER MH SECTION - REHAB	RMH6024	1	700
F	60 IN X 4 FT POLYMER MH SECTION - REHAB	RMH6048	2	2,800
	Totals (precast, lbs.)		7	6,010

ARMOROCK™

1575 W Horizon Ridge Parkway
#530427
Henderson, NV 89012

207 Heritage Court
Sulphur Springs, TX 75482

1708 Turkey Creek Road
Plant City, FL 33566

702-824-9702
www.armorock.com

APPROVED BY: _____

Structure: Insert MH 756005216
Job Number: AZ2402
Job Name: Price Road 66" Rehab (Insert Material)
Job Location: Chandler, AZ
Maricopa County
Contractor: All Bidders
Agency:
Engineer:

Based on:
Take Off By: 7/17/2025 PMcRae

Design Build Height

Top of Casting	+	1,175.27'
Outlet Invert	-	1,165.61'
Design Height	=	9.66'
Pipe Inner Dia.	-	2.60'
Pipe Wall	-	0.03'
Pour Above	-	0.17'
Above Base	=	6.86'

Stack Build Height

Ring	+	0.39'
Adjustment	+	0.97'
Concentric Slab	+	0.50'
Eccentric Cone	+	3.00'
Risers	+	2.00'
Above Base	=	6.86'
Contractor Base	+	2.80'
Design Height	=	9.66'

Ship Date:
Ring: 30" City of Chandler CAP R&C By Others
Channel: BASE POURED IN FIELD BY CONTRACTOR
Reduction:
Notes:

Openings

ID	Invert	Pipe Size	Connector	Hole Size	Angle	To CL	Top to Top	Hole Former
#1	1165.61'	30" Ductile Iron	In 53 IN Rehab Base	N/A	0°	18"	0"	30 DIP
#2	1165.61'	30" Ductile Iron	In 53 IN Rehab Base	N/A	157°	18"	0"	30 DIP

Elevation (View A-A)

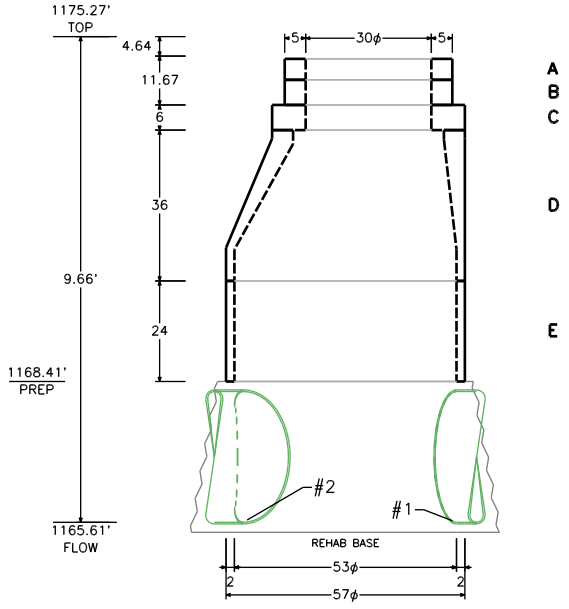

Plan View

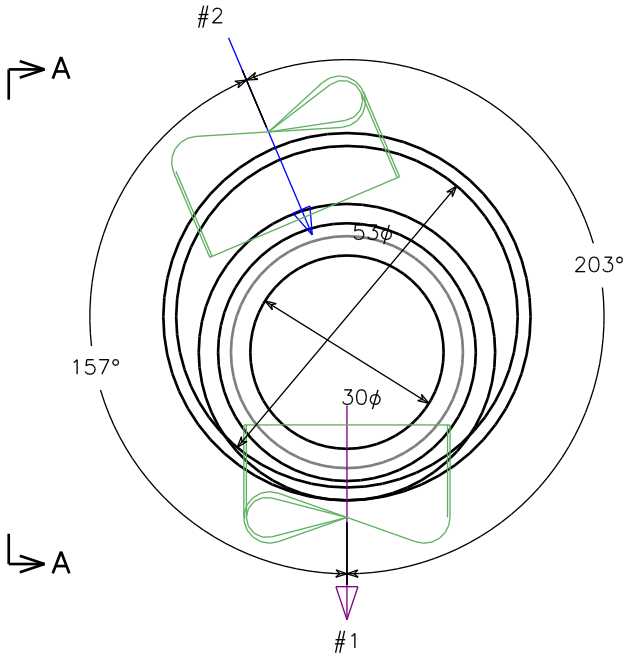

BOM For Stack

ID	Description	Part Number	Qty.	Weight
	POLYMER GROUT KIT	PGROUT	1	
	1.25 IN X 14 FT JOINT MASTIC ROLL	MASJ	2	
A	30 IN X 5 IN POLYMER GRADE RING	MHGR30X5	1	240
B	30 IN X 6 IN POLYMER GRADE RING	MHGR30X6	1	280
C	36 IN CONCENTRIC POLYMER TRANSITION LID W/ 30" ACCESS	MHTLC3630	1	490
D	60 IN X 3 FT ECC POLYMER CONE - REHAB W/ 36" ACCESS	RMHC6036	1	1,600
E	60 IN X 2 FT POLYMER MH SECTION - REHAB	RMH6024	1	700
	Totals (precast, lbs.)		5	3,310

ARMOROCK™

1575 W Horizon Ridge Parkway
#530427
Henderson, NV 89012

207 Heritage Court
Sulphur Springs, TX 75482

1708 Turkey Creek Road
Plant City, FL 33566

702-824-9702
www.armorock.com

APPROVED BY: _____

Structure: Insert MH 756009519
Job Number: AZ2402
Job Name: Price Road 66" Rehab (Insert Material)
Job Location: Chandler, AZ
Maricopa County
Contractor: All Bidders
Agency:
Engineer:

Based on:
Take Off By: 7/17/2025 PMcRae

Design Build Height

Top of Casting	+	1,182.48'
Outlet Invert	-	1,163.97'
Design Height	=	18.51'
Pipe Inner Dia.	-	2.60'
Pipe Wall	-	0.03'
Pour Above	-	0.17'
Above Base	=	15.71'

Stack Build Height

Ring	+	0.39'
Adjustment	+	0.82'
Concentric Slab	+	0.50'
Eccentric Cone	+	3.00'
Risers	+	11.00'
Above Base	=	15.71'
Contractor Base	+	2.80'
Design Height	=	18.51'

Ship Date:
Ring: 30" City of Chandler CAP R&C By Others
Channel: BASE POURED IN FIELD BY CONTRACTOR
Reduction:
Notes:

Openings

ID	Invert	Pipe Size	Connector	Hole Size	Angle	To CL	Top to Top	Hole Former
#1	1163.97'	30" Ductile Iron	In 53 IN Rehab Base	N/A	0°	18"	0"	30 DIP
#2	1163.97'	30" Ductile Iron	In 53 IN Rehab Base	N/A	180°	18"	0"	30 DIP

Elevation (View A-A)

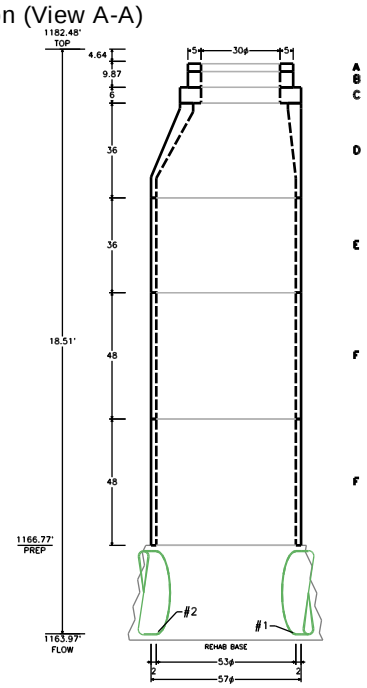

Plan View

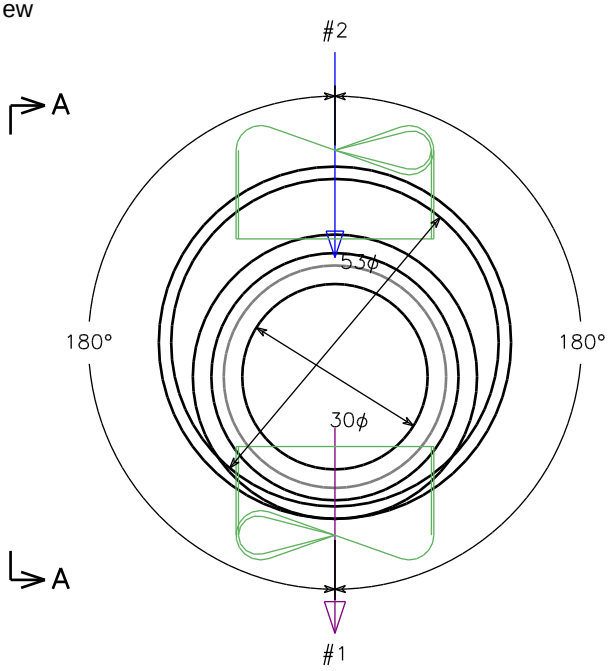

BOM For Stack

ID	Description	Part Number	Qty.	Weight
	POLYMER GROUT KIT	PGROUT	1	
	1.25 IN X 14 FT JOINT MASTIC ROLL	MASJ	6	
A	30 IN X 3 IN POLYMER GRADE RING	MHGR30X3	1	140
B	30 IN X 6 IN POLYMER GRADE RING	MHGR30X6	1	280
C	36 IN CONCENTRIC POLYMER TRANSITION LID W/ 30" ACCESS	MHTLC3630	1	490
D	60 IN X 3 FT ECC POLYMER CONE - REHAB W/ 36" ACCESS	RMHC6036	1	1,600
E	60 IN X 3 FT POLYMER MH SECTION - REHAB	RMH6036	1	1,100
F	60 IN X 4 FT POLYMER MH SECTION - REHAB	RMH6048	2	2,800
	Totals (precast, lbs.)		7	6,410

1575 W Horizon Ridge Parkway
#530427
Henderson, NV 89012

207 Heritage Court
Sulphur Springs, TX 75482

1708 Turkey Creek Road
Plant City, FL 33566

702-824-9702
www.armorock.com

APPROVED BY: _____

Structure: Insert MH 756020514
Job Number: AZ2402
Job Name: Price Road 66" Rehab (Insert Material)
Job Location: Chandler, AZ
Maricopa County
Contractor: All Bidders
Agency:
Engineer:

Based on:
Take Off By: 7/17/2025 PMcRae

Design Build Height

Top of Casting	+	1,195.71'
Outlet Invert	-	1,165.46'
Design Height	=	30.25'
Pipe Inner Dia.	-	2.60'
Pipe Wall	-	0.03'
Pour Above	-	0.17'
Above Base	=	27.45'

Stack Build Height

Ring	+	0.39'
Adjustment	+	0.56'
Concentric Slab	+	0.50'
Eccentric Cone	+	3.00'
Risers	+	23.00'
Above Base	=	27.45'
Contractor Base	+	2.80'
Design Height	=	30.25'

Ship Date:
Ring: 30" City of Chandler CAP R&C By Others
Channel: BASE POURED IN FIELD BY CONTRACTOR
Reduction:
Notes:

Openings

ID	Invert	Pipe Size	Connector	Hole Size	Angle	To CL	Top to Top	Hole Former
#1	1165.46'	30" Ductile Iron	In 53 IN Rehab Base	N/A	0°	18"	0"	30 DIP
#2	1165.46'	30" Ductile Iron	In 53 IN Rehab Base	N/A	157°	18"	0"	30 DIP

Elevation (View A-A)

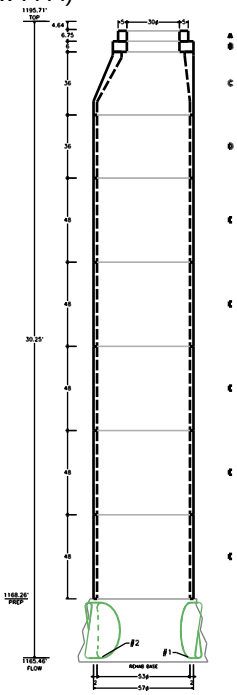

Plan View

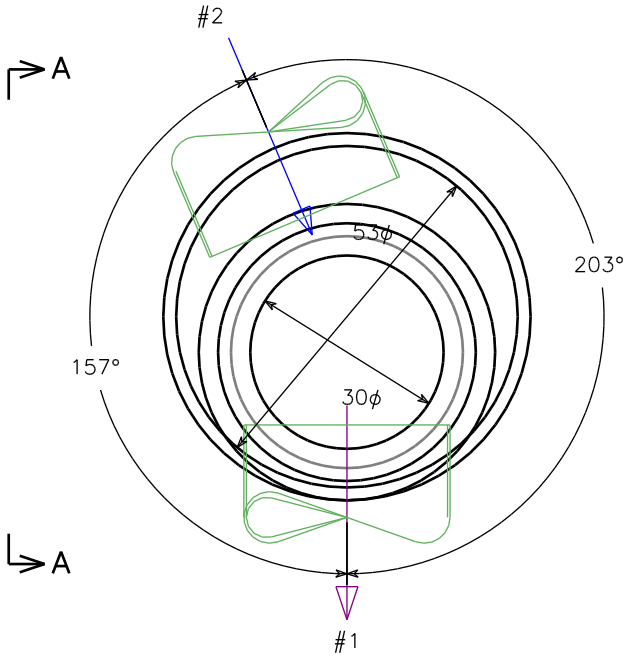

BOM For Stack

ID	Description	Part Number	Qty.	Weight
	POLYMER GROUT KIT	PGROUT	1	
	1.25 IN X 14 FT JOINT MASTIC ROLL	MASJ	12	
A	30 IN X 6 IN POLYMER GRADE RING	MHGR30X6	1	280
B	36 IN CONCENTRIC POLYMER TRANSITION LID W/ 30" ACCESS	MHTLC3630	1	490
C	60 IN X 3 FT ECC POLYMER CONE - REHAB W/ 36" ACCESS	RMHC6036	1	1,600
D	60 IN X 3 FT POLYMER MH SECTION - REHAB	RMH6036	1	1,100
E	60 IN X 4 FT POLYMER MH SECTION - REHAB	RMH6048	5	7,000
	Totals (precast, lbs.)		9	10,470

ARMOROCK™

1575 W Horizon Ridge Parkway
#530427
Henderson, NV 89012

207 Heritage Court
Sulphur Springs, TX 75482

1708 Turkey Creek Road
Plant City, FL 33566

702-824-9702
www.armorock.com

APPROVED BY: _____

Structure: Insert MH 756023918
Job Number: AZ2402
Job Name: Price Road 66" Rehab (Insert Material)
Job Location: Chandler, AZ
Maricopa County
Contractor: All Bidders
Agency:
Engineer:

Based on:
Take Off By: 7/17/2025 PMcRae

Design Build Height

Top of Casting	+	1,188.85'
Outlet Invert	-	1,165.55'
Design Height	=	23.30'
Pipe Inner Dia.	-	2.60'
Pipe Wall	-	0.03'
Pour Above	-	0.17'
Above Base	=	20.50'

Stack Build Height

Ring	+	0.39'
Adjustment	+	0.61'
Concentric Slab	+	0.50'
Eccentric Cone	+	3.00'
Risers	+	16.00'
Above Base	=	20.50'
Contractor Base	+	2.80'
Design Height	=	23.30'

Ship Date:
Ring: 30" City of Chandler CAP R&C By Others
Channel: BASE POURED IN FIELD BY CONTRACTOR
Reduction:
Notes:

Openings

ID	Invert	Pipe Size	Connector	Hole Size	Angle	To CL	Top to Top	Hole Former
#1	1165.55'	30" Ductile Iron	In 53 IN Rehab Base	N/A	0°	18"	0"	30 DIP
#2	1165.55'	30" Ductile Iron	In 53 IN Rehab Base	N/A	144°	18"	0"	30 DIP

Elevation (View A-A)

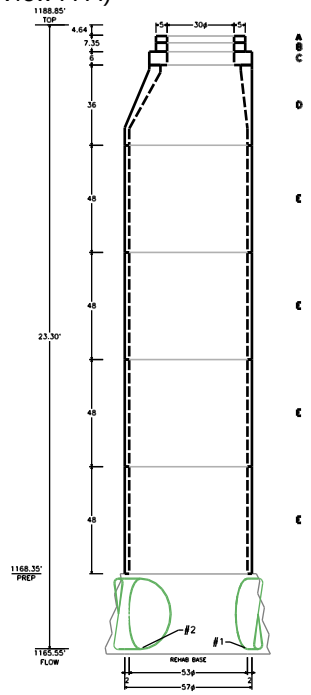

Plan View

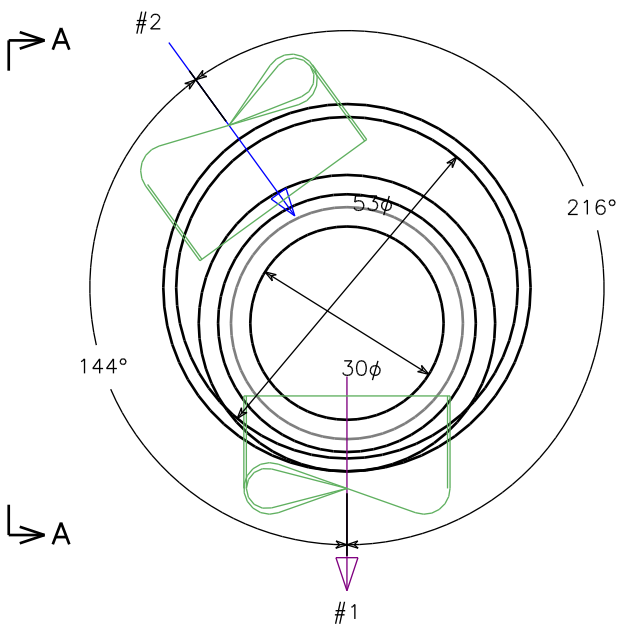

BOM For Stack

ID	Description	Part Number	Qty.	Weight
	POLYMER GROUT KIT	PGROUT	1	
	1.25 IN X 14 FT JOINT MASTIC ROLL	MASJ	8	
A	30 IN X 3 IN POLYMER GRADE RING	MHGR30X3	1	140
B	30 IN X 4 IN POLYMER GRADE RING	MHGR30X4	1	190
C	36 IN CONCENTRIC POLYMER TRANSITION LID W/ 30" ACCESS	MHTLC3630	1	490
D	60 IN X 3 FT ECC POLYMER CONE - REHAB W/ 36" ACCESS	RMHC6036	1	1,600
E	60 IN X 4 FT POLYMER MH SECTION - REHAB	RMH6048	4	5,600
	Totals (precast, lbs.)		8	8,020

1575 W Horizon Ridge Parkway
#530427
Henderson, NV 89012

207 Heritage Court
Sulphur Springs, TX 75482

1708 Turkey Creek Road
Plant City, FL 33566

702-824-9702
www.armorock.com

APPROVED BY: _____

Structure: Insert MH 756023919
Job Number: AZ2402
Job Name: Price Road 66" Rehab (Insert Material)
Job Location: Chandler, AZ
Maricopa County
Contractor: All Bidders
Agency:
Engineer:

Based on:
Take Off By: 7/17/2025 PMcRae

Design Build Height

Top of Casting	+	1,188.74'
Outlet Invert	-	1,165.51'
Design Height	=	23.23'
Pipe Inner Dia.	-	2.60'
Pipe Wall	-	0.03'
Pour Above	-	0.17'
Above Base	=	20.43'

Stack Build Height

Ring	+	0.39'
Adjustment	+	0.54'
Concentric Slab	+	0.50'
Eccentric Cone	+	3.00'
Risers	+	16.00'
Above Base	=	20.43'
Contractor Base	+	2.80'
Design Height	=	23.23'

Ship Date:
Ring: 30" City of Chandler CAP R&C By Others
Channel: BASE POURED IN FIELD BY CONTRACTOR
Reduction:
Notes:

Openings

ID	Invert	Pipe Size	Connector	Hole Size	Angle	To CL	Top to Top	Hole Former
#1	1165.51'	30" Ductile Iron	In 53 IN Rehab Base	N/A	0°	18"	0"	30 DIP
#2	1165.51'	30" Ductile Iron	In 53 IN Rehab Base	N/A	202°	18"	0"	30 DIP

Elevation (View A-A)

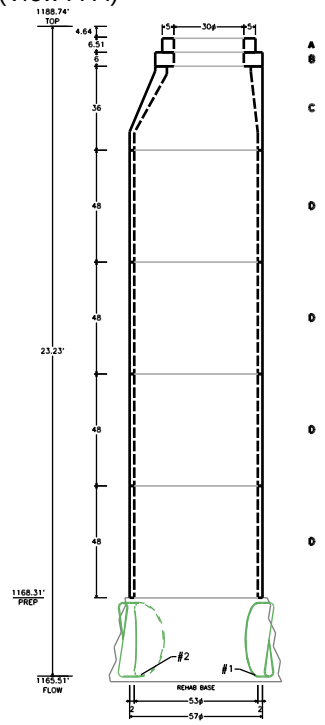

Plan View

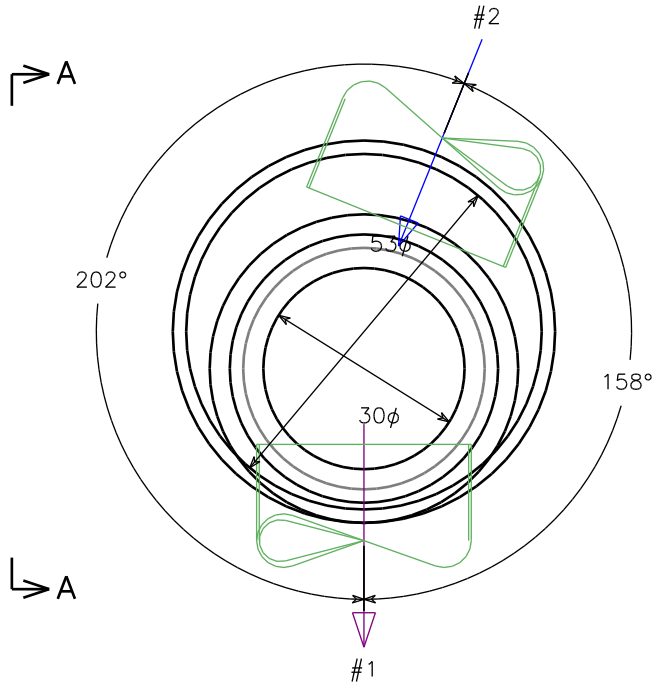

BOM For Stack

ID	Description	Part Number	Qty.	Weight
	POLYMER GROUT KIT	PGROUT	1	
	1.25 IN X 14 FT JOINT MASTIC ROLL	MASJ	8	
A	30 IN X 6 IN POLYMER GRADE RING	MHGR30X6	1	280
B	36 IN CONCENTRIC POLYMER TRANSITION LID W/ 30" ACCESS	MHTLC3630	1	490
C	60 IN X 3 FT ECC POLYMER CONE - REHAB W/ 36" ACCESS	RMHC6036	1	1,600
D	60 IN X 4 FT POLYMER MH SECTION - REHAB	RMH6048	4	5,600
	Totals (precast, lbs.)		7	7,970

ARMOROCK™

1575 W Horizon Ridge Parkway
#530427
Henderson, NV 89012

207 Heritage Court
Sulphur Springs, TX 75482

1708 Turkey Creek Road
Plant City, FL 33566

702-824-9702
www.armorock.com

APPROVED BY: _____

Structure: Insert MH 756023920
Job Number: AZ2402
Job Name: Price Road 66" Rehab (Insert Material)
Job Location: Chandler, AZ
Maricopa County
Contractor: All Bidders
Agency:
Engineer:

Based on:
Take Off By: 7/17/2025 PMcRae

Design Build Height

Top of Casting	+	1,198.58'
Outlet Invert	-	1,165.16'
Design Height	=	33.42'
Pipe Inner Dia.	-	2.60'
Pipe Wall	-	0.03'
Pour Above	-	0.17'
Above Base	=	30.62'

Stack Build Height

Ring	+	0.39'
Adjustment	+	0.73'
Concentric Slab	+	0.50'
Eccentric Cone	+	3.00'
Risers	+	26.00'
Above Base	=	30.62'
Contractor Base	+	2.80'
Design Height	=	33.42'

Ship Date:
Ring: 30" City of Chandler CAP R&C By Others
Channel: BASE POURED IN FIELD BY CONTRACTOR
Reduction:
Notes:

Openings

ID	Invert	Pipe Size	Connector	Hole Size	Angle	To CL	Top to Top	Hole Former
#1	1165.16'	30" Ductile Iron	In 53 IN Rehab Base	N/A	0°	18"	0"	30 DIP
#2	1165.16'	30" Ductile Iron	In 53 IN Rehab Base	N/A	203°	18"	0"	30 DIP

Elevation (View A-A)

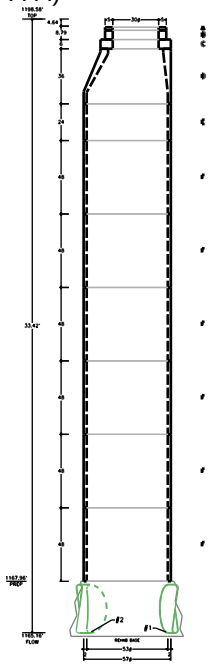

Plan View

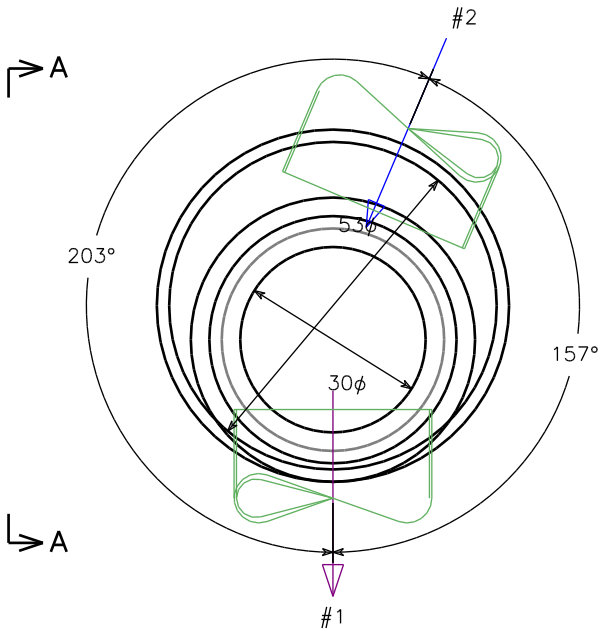

BOM For Stack

ID	Description	Part Number	Qty.	Weight
	POLYMER GROUT KIT	PGROUT	1	
	1.25 IN X 14 FT JOINT MASTIC ROLL	MASJ	14	
A	30 IN X 2 IN POLYMER GRADE RING	MHGR30X2	1	100
B	30 IN X 6 IN POLYMER GRADE RING	MHGR30X6	1	280
C	36 IN CONCENTRIC POLYMER TRANSITION LID W/ 30" ACCESS	MHTLC3630	1	490
D	60 IN X 3 FT ECC POLYMER CONE - REHAB W/ 36" ACCESS	RMHC6036	1	1,600
E	60 IN X 2 FT POLYMER MH SECTION - REHAB	RMH6024	1	700
F	60 IN X 4 FT POLYMER MH SECTION - REHAB	RMH6048	6	8,400
	Totals (precast, lbs.)		11	11,570

ARMOROCK™

1575 W Horizon Ridge Parkway
#530427
Henderson, NV 89012

207 Heritage Court
Sulphur Springs, TX 75482

1708 Turkey Creek Road
Plant City, FL 33566

702-824-9702
www.armorock.com

APPROVED BY: _____

Structure: MH 01 STA 99+03.81
Job Number: AZ2402
Job Name: Price Road 66" Rehab (Insert Material)
Job Location: Chandler, AZ
Maricopa County
Contractor: All Bidders
Agency:
Engineer:

Based on:
Take Off By: 7/17/2025 PMcRae

Design Build Height

Rim	+	1,187.26'
Outlet Invert	-	1,164.21'
Design Height	=	23.05'

Stack Build Height

Ring	+	0.39'
Adjustment	+	0.80'
Eccentric Cone	+	3.00'
Risers	+	11.00'
Eccentric Slab	+	0.92'
Base Gain	+	6.95'
Design Height	=	23.05'
Floor Thickness	+	1.05'
Outside Height	=	24.10'

Ship Date:
Ring: 30" City of Chandler CAP R&C By Others
Channel: FULL DEPTH PLUS 6" TROUGHING
Reduction:
Notes:

Openings

ID	Invert	Pipe Size	Connector	Hole Size	Angle	To CL	Top to Top	Hole Former
#1	1164.21'	66 HOBAS	S206-74	74" Ø (84.49" v	0°	45"	14"	
#2	1164.21'	66 HOBAS	S206-74	74" Ø (84.49" v	127°	45"	14"	

Elevation (View A-A)

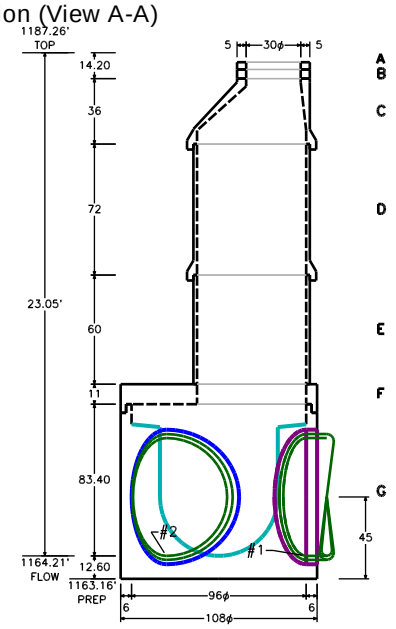

Plan View

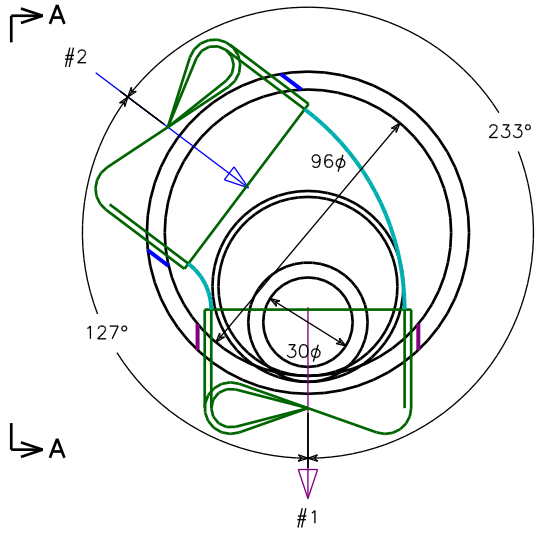

BOM For Stack

ID	Description	Part Number	Qty.	Weight
	60" JOINT GASKET	60" Joint Gaske	3	
	1.25 IN X 14 FT JOINT MASTIC ROLL	MASJ	10	
	96" JOINT GASKET	96" Joint Gaske	1	
A	30 IN X 4 IN POLYMER GRADE RING	MHGR30X4	1	190
B	30 IN X 5 IN POLYMER GRADE RING	MHGR30X5	1	240
C	60 IN X 3 FT ECC POLYMER CONE W/ 30" ACCESS	MHC6030	1	2,200
D	60 IN X 6 FT POLYMER MH SECTION	MHS6072	1	2,900
E	60 IN X 5 FT POLYMER MH SECTION NO BELL	MHS6060NB	1	2,000
F	96 IN ECC POLYMER TRANSITION LID W/ 60" ACCESS	MHTL9660	1	6,300
G	96 IN X 8 FT POLYMER PRECAST BASE FULL PLUS DEPTH TROUGHING	MHB9696.133	1	30,700
	Totals (precast, lbs.)		7	44,530

ARMOROCK™

1575 W Horizon Ridge Parkway
#530427
Henderson, NV 89012

207 Heritage Court
Sulphur Springs, TX 75482

1708 Turkey Creek Road
Plant City, FL 33566

702-824-9702
www.armorock.com

APPROVED BY: _____

Structure: MH 02 STA 701+21.86
Job Number: AZ2402
Job Name: Price Road 66" Rehab (Insert Material)
Job Location: Chandler, AZ
Maricopa County
Contractor: All Bidders
Agency:
Engineer:

Based on:
Take Off By: 7/17/2025 PMcRae

Design Build Height

Rim	+	1,187.32'
Outlet Invert	-	1,164.18'
Design Height	=	23.14'

Stack Build Height

Ring	+	0.39'
Adjustment	+	0.89'
Eccentric Cone	+	3.00'
Risers	+	11.00'
Concentric Slab	+	0.92'
Base Gain	+	6.95'
Design Height	=	23.14'
Floor Thickness	+	1.05'
Outside Height	=	24.19'

Ship Date:
Ring: 30" City of Chandler CAP R&C By Others
Channel: FULL DEPTH PLUS 6" TROUGHING
Reduction:
Notes:

Openings

ID	Invert	Pipe Size	Connector	Hole Size	Angle	To CL	Top to Top	Hole Former
#1	1164.18'	66 HOBAS	S206-74	74" Ø (84.49" v	0°	45"	14"	
#2	1164.18'	66 HOBAS	S206-74	74" Ø (84.49" v	143°	45"	14"	

Elevation (View A-A)

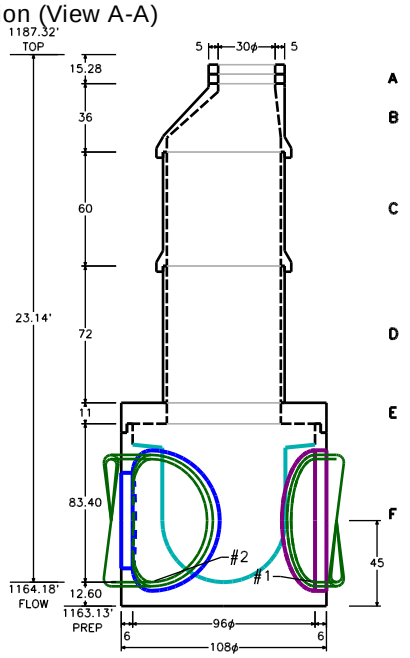

Plan View

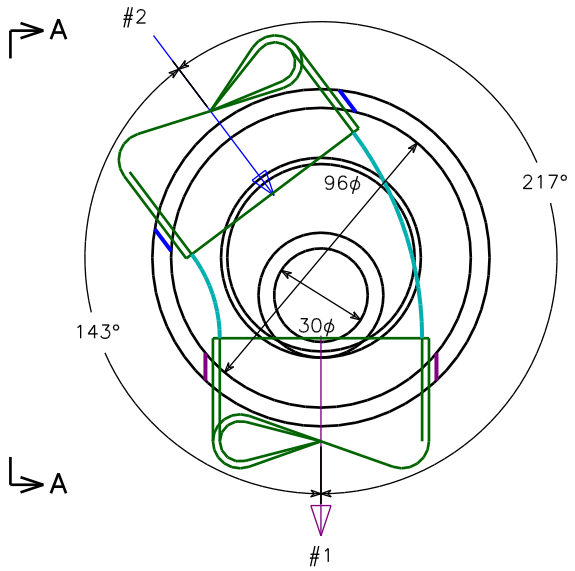

BOM For Stack

ID	Description	Part Number	Qty.	Weight
	60" JOINT GASKET	60" Joint Gaske	3	
	1.25 IN X 14 FT JOINT MASTIC ROLL	MASJ	10	
	96" JOINT GASKET	96" Joint Gaske	1	
A	30 IN X 5 IN POLYMER GRADE RING	MHGR30X5	2	480
B	60 IN X 3 FT ECC POLYMER CONE W/ 30" ACCESS	MHC6030	1	2,200
C	60 IN X 5 FT POLYMER MH SECTION	MHS6060	1	2,500
D	60 IN X 6 FT POLYMER MH SECTION NO BELL	MHS6072NB	1	2,400
E	96 IN CONCENTRIC POLYMER TRANSITION LID W/ 60" ACCESS	MHTLC9660	1	6,300
F	96 IN X 8 FT POLYMER PRECAST BASE FULL PLUS DEPTH TROUGHING	MHB9696.133	1	30,700
	Totals (precast, lbs.)		7	44,580

ARMOROCK™

1575 W Horizon Ridge Parkway
#530427
Henderson, NV 89012

207 Heritage Court
Sulphur Springs, TX 75482

1708 Turkey Creek Road
Plant City, FL 33566

702-824-9702
www.armorock.com

APPROVED BY: _____

Structure: MH 03 STA 102+33.52
Job Number: AZ2402
Job Name: Price Road 66" Rehab (Insert Material)
Job Location: Chandler, AZ
Maricopa County
Contractor: All Bidders
Agency:
Engineer:

Based on:
Take Off By: 7/17/2025 PMcRae

Design Build Height

Rim	+	1,187.23'
Outlet Invert	-	1,164.44'
Design Height	=	22.79'

Stack Build Height

Ring	+	0.39'
Adjustment	+	0.54'
Eccentric Cone	+	3.00'
Risers	+	11.00'
Eccentric Slab	+	0.92'
Base Gain	+	6.95'
Design Height	=	22.79'
Floor Thickness	+	1.05'
Outside Height	=	23.84'

Ship Date:
Ring: 30" City of Chandler CAP R&C By Others
Channel: FULL DEPTH PLUS 6" TROUGHING
Reduction:
Notes:

Openings

ID	Invert	Pipe Size	Connector	Hole Size	Angle	To CL	Top to Top	Hole Former
#1	1164.44'	66 HOBAS	S206-74	74" Ø (84.49" v	0°	45"	14"	
#2	1164.44'	66 HOBAS	S206-74	74" Ø (84.49" v	120°	45"	14"	

Elevation (View A-A)

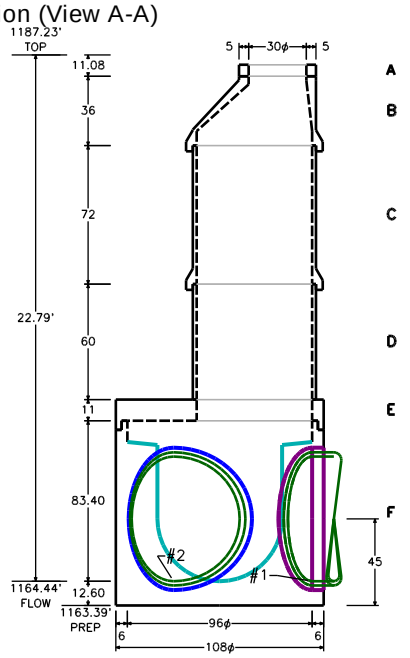

Plan View

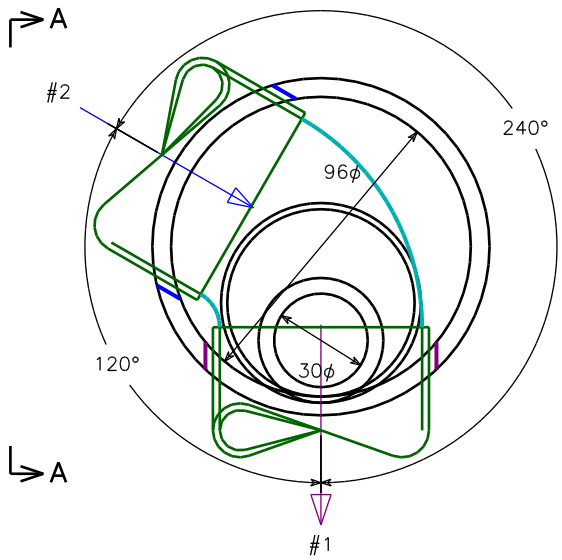

BOM For Stack

ID	Description	Part Number	Qty.	Weight
	60" JOINT GASKET	60" Joint Gaske	3	
	1.25 IN X 14 FT JOINT MASTIC ROLL	MASJ	10	
	96" JOINT GASKET	96" Joint Gaske	1	
A	30 IN X 6 IN POLYMER GRADE RING	MHGR30X6	1	280
B	60 IN X 3 FT ECC POLYMER CONE W/ 30" ACCESS	MHC6030	1	2,200
C	60 IN X 6 FT POLYMER MH SECTION	MHS6072	1	2,900
D	60 IN X 5 FT POLYMER MH SECTION NO BELL	MHS6060NB	1	2,000
E	96 IN ECC POLYMER TRANSITION LID W/ 60" ACCESS	MHTL9660	1	6,300
F	96 IN X 8 FT POLYMER PRECAST BASE FULL PLUS DEPTH TROUGHING	MHB9696.133	1	30,700
	Totals (precast, lbs.)		6	44,380

ARMOROCK™

1575 W Horizon Ridge Parkway
#530427
Henderson, NV 89012

207 Heritage Court
Sulphur Springs, TX 75482

1708 Turkey Creek Road
Plant City, FL 33566

702-824-9702
www.armorock.com

APPROVED BY: _____

Structure: MH 04 STA 200+00.00
Job Number: AZ2402
Job Name: Price Road 66" Rehab (Insert Material)
Job Location: Chandler, AZ
Maricopa County
Contractor: All Bidders
Agency:
Engineer:

Based on:
Take Off By: 7/17/2025 PMcRae

Design Build Height

Rim	+	1,187.64'
Outlet Invert	-	1,165.20'
Design Height	=	22.44'

Stack Build Height

Ring	+	0.39'
Adjustment	+	0.19'
Eccentric Cone	+	3.00'
Risers	+	11.00'
Eccentric Slab	+	0.92'
Base Gain	+	6.95'
Design Height	=	22.44'
Floor Thickness	+	1.05'
Outside Height	=	23.49'

Ship Date:
Ring: 30" City of Chandler CAP R&C By Others
Channel: FULL DEPTH PLUS 6" TROUGHING
Reduction:
Notes: Verify Opening #1 hole size that its correct for 50.8" O.D.

Openings

ID	Invert	Pipe Size	Connector	Hole Size	Angle	To CL	Top to Top	Hole Former
#1	1165.20'	48" PVC Sdr 35	S206-54L Boot	54" Ø	0°	36.65"	32.35"	48 Sdr35
#2	1165.20'	66 HOBAS	S206-74	74" Ø (84.49" v	175°	45"	14"	

Elevation (View A-A)

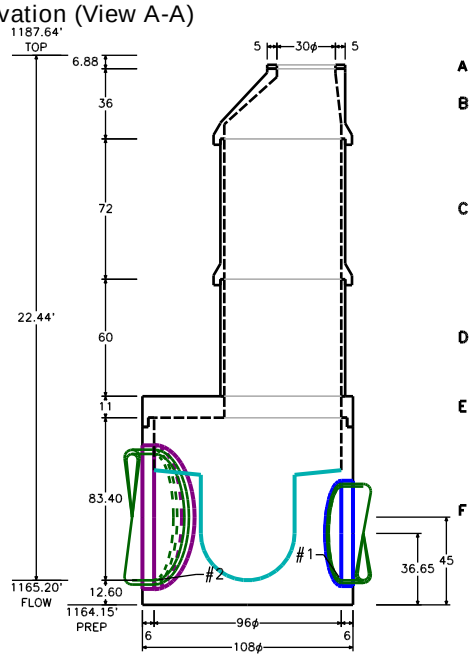

Plan View

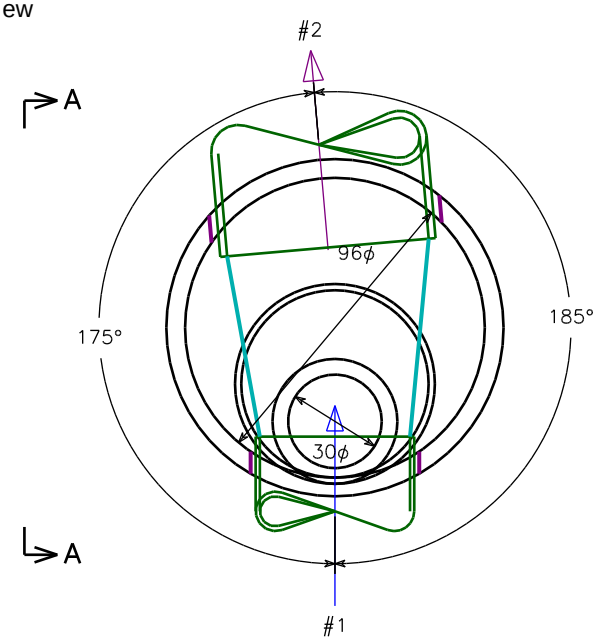

BOM For Stack

ID	Description	Part Number	Qty.	Weight
	60" JOINT GASKET	60" Joint Gaske	3	
	1.25 IN X 14 FT JOINT MASTIC ROLL	MASJ	10	
	96" JOINT GASKET	96" Joint Gaske	1	
A	30 IN X 2 IN POLYMER GRADE RING	MHGR30X2	1	100
B	60 IN X 3 FT ECC POLYMER CONE W/ 30" ACCESS	MHC6030	1	2,200
C	60 IN X 6 FT POLYMER MH SECTION	MHS6072	1	2,900
D	60 IN X 5 FT POLYMER MH SECTION NO BELL	MHS6060NB	1	2,000
E	96 IN ECC POLYMER TRANSITION LID W/ 60" ACCESS	MHTL9660	1	6,300
F	96 IN X 8 FT POLYMER PRECAST BASE FULL PLUS DEPTH TROUGHING	MHB9696.133	1	34,900
	Totals (precast, lbs.)		6	48,400

ARMOROCK™

1575 W Horizon Ridge Parkway
#530427
Henderson, NV 89012

207 Heritage Court
Sulphur Springs, TX 75482

1708 Turkey Creek Road
Plant City, FL 33566

702-824-9702
www.armorock.com

APPROVED BY: _____

Structure: Structure C Full Depth+
Job Number: AZ2402
Job Name: Price Road 66" Rehab (Insert Material)
Job Location: Chandler, AZ
Maricopa County
Contractor: All Bidders
Agency:
Engineer:

Based on:
Take Off By: 7/17/2025 PMcRae

Design Build Height

Rim	+	1,187.74'
Outlet Invert	-	1,165.12'
Design Height	=	22.62'

Stack Build Height

Eccentric Slab	+	1.00'
Risers	+	14.00'
Last Riser Gain	+	7.62'
Design Height	=	22.62'
Floor Thickness	+	1.63'
Outside Height	=	24.25'

Ship Date:
Ring: 30" City of Chandler Sewer A-1700 R&C By Others
Channel: FULL DEPTH PLUS 4" TROUGHING
Reduction:
Notes: Stop log storage racks supplied and installed by others.

Openings

ID	Invert	Pipe Size	Connector	Hole Size	Angle	To CL	Top to Top	Hole Former
#1	1165.12'	66 HOBAS	S206-74	74" Ø (75.97" v	0°	37"	22"	
#2	1187.75'	21x84 Hole Box	Mortar	88"Wx24"H Bo	180°	6"	0"	
#3	1187.75'	84x21 Hole Box	Mortar	26"Wx88"H Bo	180°	6"	0"	
#4	1187.75'	80x36 Hole Box	Mortar	40"Wx84"H Bo	90°	6"	0"	
#5	1165.12'	66 HOBAS	S206-74	74" Ø (75.97" v	180°	37"	22"	
#6	1165.12'	66 HOBAS	S206-74	74" Ø (75.97" v	270°	37"	22"	

Elevation (View A-A)

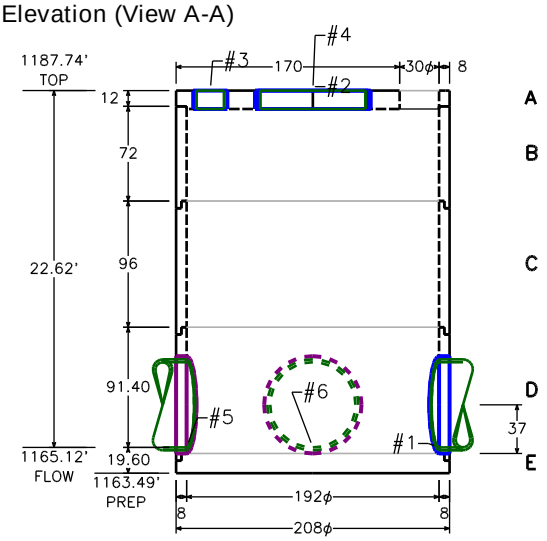

Plan View

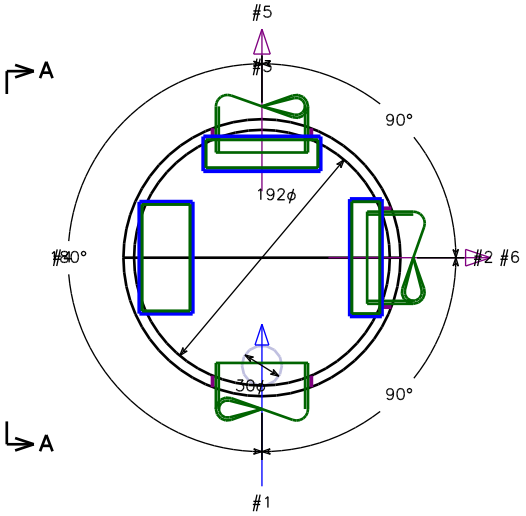

BOM For Stack

ID	Description	Part Number	Qty.	Weight
	GASKET FOR 192" MANHOLE JOINTS	Gasket	3	
	LABOR FOR FIELD GROUTING		1	
	POLYMER GROUT KIT	PGROUT	1	
	1.25 IN X 14 FT JOINT MASTIC ROLL	MASJ	72	
A	192 IN ECC SPLIT POLYMER LID FLAT W/ 30" ACCESS	MHL19230	1	30,400
B	192 IN X 6 FT POLYMER MH SECTION	MHS19272	1	31,600
C	192 IN X 8 FT POLYMER MH SECTION	MHS19296	1	40,600
D	192 IN X 8 FT POLYMER MH SECTION W/ CORED HOLE	MHS19296H	1	31,700
E	192 IN X 1 FT 3 IN POLYMER PRECAST BASE FULL PLUS DEPTH TROUGHING	MHB19215.133	1	137,400
	Totals (precast, lbs.)		5	271,700

ARMOROCK™

1575 W Horizon Ridge Parkway
#530427
Henderson, NV 89012

207 Heritage Court
Sulphur Springs, TX 75482

1708 Turkey Creek Road
Plant City, FL 33566

702-824-9702
www.armorock.com

APPROVED BY: _____

Structure: Structure D
Job Number: AZ2402
Job Name: Price Road 66" Rehab (Insert Material)
Job Location: Chandler, AZ
Maricopa County
Contractor: All Bidders
Agency:
Engineer:

Based on:
Take Off By: 7/17/2025 PMcRae

Design Build Height

Rim	+	1,188.71'
Outlet Invert	-	1,168.92'
Design Height	=	19.79'

Stack Build Height

Ring	+	0.50'
Adjustment	+	0.29'
Eccentric Cone	+	3.00'
Risers	+	10.00'
Eccentric Slab	+	0.83'
Base Gain	+	5.17'
Design Height	=	19.79'
Floor Thickness	+	0.92'
Outside Height	=	20.71'

Ship Date:
Ring: 30" City of Chandler Sewer A-1700 R&C
Channel: FULL DEPTH PLUS 4" TROUGHING
Reduction:
Notes:

Openings

ID	Invert	Pipe Size	Connector	Hole Size	Angle	To CL	Top to Top	Hole Former
#1	1168.92'	48" HOBAS	S206-54L Boot	54" Ø	0°	35"	11"	48 HOBAS
#2	1168.92'	48" HOBAS	S206-54L Boot	54" Ø	150°	35"	11"	48 HOBAS

Elevation (View A-A)

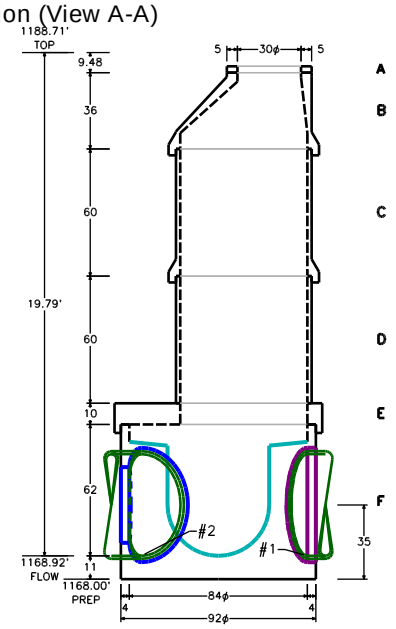

Plan View

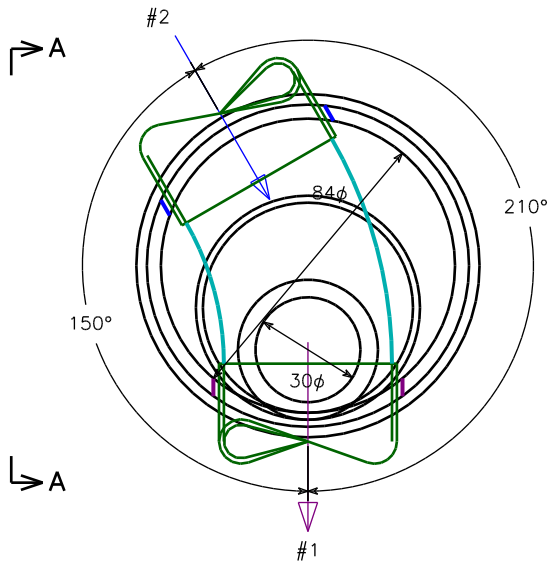

BOM For Stack

ID	Description	Part Number	Qty.	Weight
	GASKET FOR 192" MANHOLE JOINTS	Gasket	3	
	GASKET FOR 48" MANHOLE JOINTS	Gasket	2	
	POLYMER GROUT KIT	PGROUT	1	
	1.25 IN X 14 FT JOINT MASTIC ROLL	MASJ	10	
A	30 IN X 3 IN POLYMER GRADE RING	MHGR30X3	1	140
B	60 IN X 3 FT ECC POLYMER CONE W/ 30" ACCESS	MHC6030	1	2,200
C	60 IN X 5 FT POLYMER MH SECTION	MHS6060	1	2,500
D	60 IN X 5 FT POLYMER MH SECTION NO BELL	MHS6060NB	1	2,000
E	84 IN ECC POLYMER TRANSITION LID W/ 60" ACCESS	MHTL8460	1	4,300
F	84 IN X 6 FT 1 IN POLYMER PRECAST BASE FULL PLUS DEPTH TROUGHING	MHB8473.133	1	20,000
	Totals (precast, lbs.)		6	31,140

ARMOROCK™

1575 W Horizon Ridge Parkway
#530427
Henderson, NV 89012

207 Heritage Court
Sulphur Springs, TX 75482

1708 Turkey Creek Road
Plant City, FL 33566

702-824-9702
www.armorock.com

APPROVED BY: _____

Structure: Structure E Full Depth +
Job Number: AZ2402
Job Name: Price Road 66" Rehab (Insert Material)
Job Location: Chandler, AZ
Maricopa County
Contractor: All Bidders
Agency:
Engineer:

Based on:
Take Off By: 7/16/2025 JoshuaJohnson

Design Build Height

Rim	+	1,187.27'
Outlet Invert	-	1,165.06'
Design Height	=	22.21'

Stack Build Height

Adjustment	+	0.01'
Eccentric Slab	+	1.00'
Risers	+	13.58'
Last Riser Gain	+	7.62'
Design Height	=	22.21'
Floor Thickness	+	1.63'
Outside Height	=	23.84'

Ship Date:
Ring: 30" City of Chandler Sewer A-1700 R&C
Channel: FULL DEPTH PLUS 4" TROUGHING
Reduction:
Notes:

Openings

ID	Invert	Pipe Size	Connector	Hole Size	Angle	To CL	Top to Top	Hole Former
#1	1165.06'	66 FRP (Fiberglass)	S206-74	74" Ø (75.97" v	0°	37.75"	21.25"	66 FRP
#2	1187.00'	30"	Mortar	40" Ø in Lid	180°	6"	0"	
#3	1187.00'	30"	Mortar	40" Ø in Lid	180°	6"	0"	
#4	1187.00'	36"x80" Hole Box	Mortar	84"Wx40"H Bo	30°	6"	0"	
#5	1165.06'	66 HOBAS	S206-74	74" Ø (75.97" v	162°	37"	22"	
#6	1165.06'	66 HOBAS	S206-74	74" Ø (75.97" v	223°	37"	22"	

Elevation (View A-A)

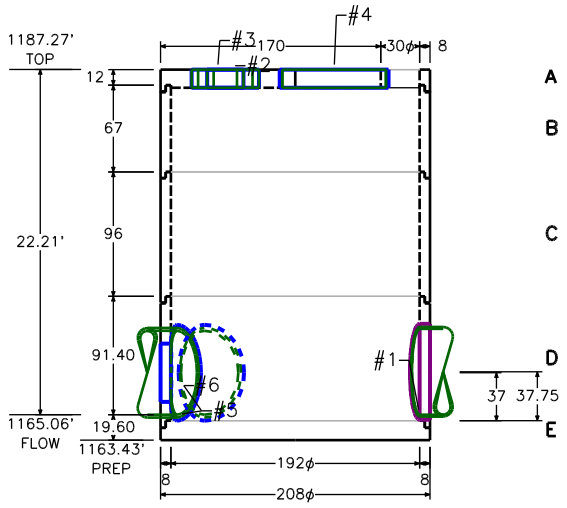

Plan View

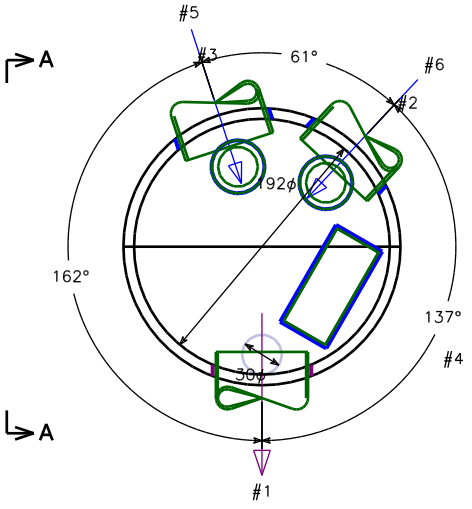

BOM For Stack

ID	Description	Part Number	Qty.	Weight
	GASKET FOR 192" MANHOLE JOINTS	Gasket	3	
	LABOR FOR FIELD GROUTING		1	
	POLYMER GROUT KIT	PGROUT	1	
	1.25 IN X 14 FT JOINT MASTIC ROLL	MASJ	72	
A	192 IN ECC SPLIT POLYMER LID FLAT W/ 30" ACCESS	MHL19230	1	33,400
B	192 IN X 5 FT 7 IN POLYMER MH SECTION	MHS19267	1	28,300
C	192 IN X 8 FT POLYMER MH SECTION	MHS19296	1	40,600
D	192 IN X 8 FT POLYMER MH SECTION W/ CORED HOLE	MHS19296H	1	31,700
E	192 IN X 1 FT 3 IN POLYMER PRECAST BASE FULL PLUS DEPTH TROUGHING	MHB19215.133	1	137,800
	Totals (precast, lbs.)		5	271,800

ARMOROCK™

1575 W Horizon Ridge Parkway
#530427
Henderson, NV 89012

207 Heritage Court
Sulphur Springs, TX 75482

1708 Turkey Creek Road
Plant City, FL 33566

702-824-9702
www.armorock.com

APPROVED BY: _____

Structure: Tee 756004806
Job Number: AZ2402
Job Name: Price Road 66" Rehab (Insert Material)
Job Location: Chandler, AZ
Maricopa County
Contractor: All Bidders
Agency:
Engineer:

Based on:
Take Off By: 7/17/2025 PMcRae

Design Build Height

Rim	+	1,183.41'
Outlet Invert	-	1,166.01'
Design Height	=	17.40'
Pipe Inner Dia.	-	4.00'
Pipe Wall	-	0.42'
Pour Above	-	0.17'
Above Base	=	12.82'

Stack Build Height

Ring	+	0.39'
Adjustment	+	0.93'
Eccentric Slab	+	0.50'
Risers	+	11.00'
Above Base	=	12.82'
Contractor Base	+	4.58'
Design Height	=	17.40'

Ship Date:
Ring: 30" City of Chandler CAP R&C By Others
Channel: BASE POURED IN FIELD BY CONTRACTOR
Reduction:
Notes: Confirm structure design

Openings

ID	Invert	Pipe Size	Connector	Hole Size	Angle	To CL	Top to Top	Hole Former
#1	1166.01'	48" RCP B	In 48 IN CIP Base	N/A	0°	31"	-6"	48 RCP(B)
#2	1166.01'	48" RCP B	In 48 IN CIP Base	N/A	180°	31"	-6"	48 RCP(B)

Elevation (View A-A)

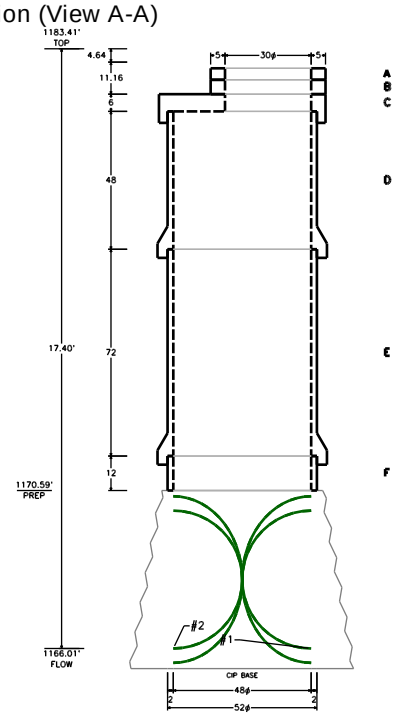

Plan View

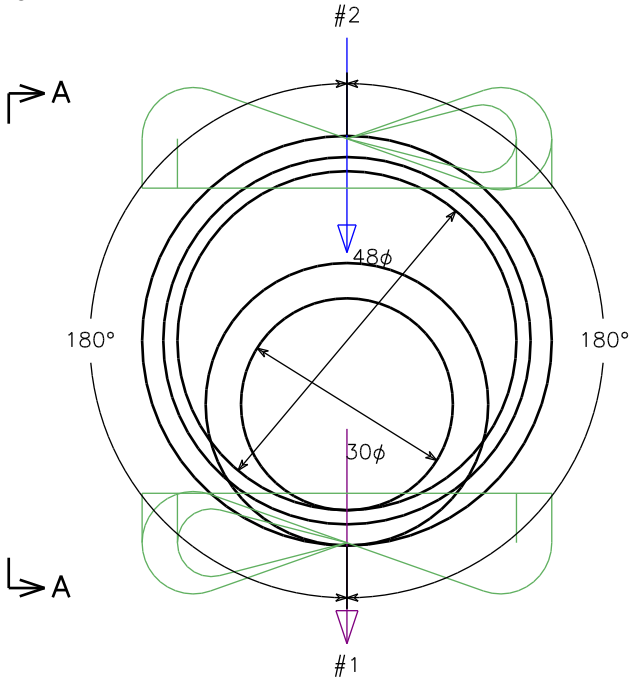

BOM For Stack

ID	Description	Part Number	Qty.	Weight
	1.25 IN X 14 FT JOINT MASTIC ROLL	MASJ	3	
A	30 IN X 4 IN POLYMER GRADE RING	MHGR30X4	1	190
B	30 IN X 5 IN POLYMER GRADE RING	MHGR30X5	1	240
C	48 IN ECC POLYMER LID FLAT W/ 30" ACCESS	MHL4830	1	1,200
D	48 IN X 4 FT POLYMER MH SECTION	MHS4848	1	1,700
E	48 IN X 6 FT POLYMER MH SECTION	MHS4872	1	2,400
F	48 IN X 1 FT POLYMER MH SECTION NO BELL	MHS4812NB	1	320
	Totals (precast, lbs.)		6	6,050

ARMOROCK™

1575 W Horizon Ridge Parkway
#530427
Henderson, NV 89012

207 Heritage Court
Sulphur Springs, TX 75482

1708 Turkey Creek Road
Plant City, FL 33566

702-824-9702
www.armorock.com

APPROVED BY: _____

Structure: Tee 756007414
Job Number: AZ2402
Job Name: Price Road 66" Rehab (Insert Material)
Job Location: Chandler, AZ
Maricopa County
Contractor: All Bidders
Agency:
Engineer:

Based on:
Take Off By: 7/17/2025 PMcRae

Design Build Height

Rim	+	1,199.65'
Outlet Invert	-	1,164.19'
Design Height	=	35.46'

Stack Build Height

Ring	+	0.39'
Adjustment	+	0.47'
Eccentric Cone	+	3.00'
Risers	+	24.00'
Concentric Slab	+	0.50'
Tee Height	+	1.00'
Above Crown	=	29.36'
Pipe ID & Wall	+	6.10'
Design Height	=	35.46'

Ship Date:
Ring: 30" City of Chandler CAP R&C By Others
Channel: BASE IS A MANHOLE TEE
Reduction:
Notes: Confirm structure design

Openings

ID	Invert	Pipe Size	Connector	Hole Size	Angle	To CL	Top to Top	Hole Former
#1	1164.19'	66" RCP C	In 36 IN TEE	N/A	0°	40.25"	10.25"	66 RCP(C)
#2	1164.19'	66" RCP C	In 36 IN TEE	N/A	173°	40.25"	10.25"	66 RCP(C)

Elevation (View A-A)

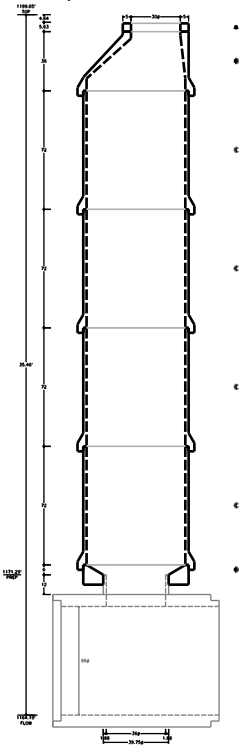

Plan View

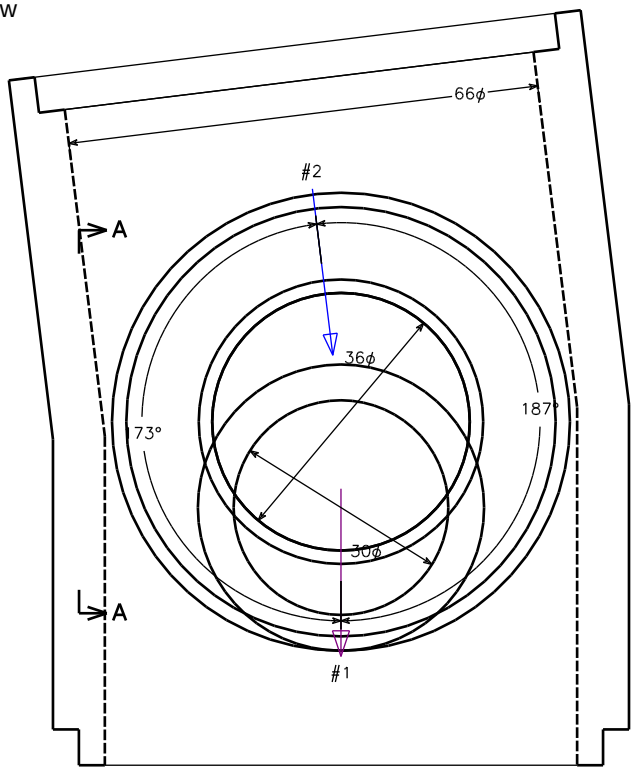

BOM For Stack

ID	Description	Part Number	Qty.	Weight
	1.25 IN X 14 FT JOINT MASTIC ROLL	MASJ	10	
A	30 IN X 5 IN POLYMER GRADE RING	MHGR30X5	1	240
B	60 IN X 3 FT ECC POLYMER CONE W/ 30" ACCESS	MHC6030	1	2,200
C	60 IN X 6 FT POLYMER MH SECTION	MHS6072	4	11,600
D	36 IN TEE ADAPTOR 60 IN	56003-TL	1	
	Totals (precast, lbs.)		7	14,040

ARMOROCK™

1575 W Horizon Ridge Parkway
#530427
Henderson, NV 89012

207 Heritage Court
Sulphur Springs, TX 75482

1708 Turkey Creek Road
Plant City, FL 33566

702-824-9702
www.armorock.com

APPROVED BY: _____

Structure: Tee 756009377
Job Number: AZ2402
Job Name: Price Road 66" Rehab (Insert Material)
Job Location: Chandler, AZ
Maricopa County
Contractor: All Bidders
Agency:
Engineer:

Based on:
Take Off By: 7/17/2025 PMcRae

Design Build Height

Rim	+	1,182.02'
Outlet Invert	-	1,166.32'
Design Height	=	15.70'

Stack Build Height

Ring	+	0.39'
Adjustment	+	0.40'
Eccentric Cone	+	3.00'
Risers	+	6.00'
Concentric Slab	+	0.50'
Tee Height	+	1.00'
Above Crown	=	11.28'
Pipe ID & Wall	+	4.42'
Design Height	=	15.70'

Ship Date:
Ring: 30" City of Chandler CAP R&C By Others
Channel: BASE IS A MANHOLE TEE
Reduction:
Notes: Confirm structure design

Openings

ID	Invert	Pipe Size	Connector	Hole Size	Angle	To CL	Top to Top	Hole Former
#1	1166.32'	48" RCP B	In 36 IN TEE	N/A	0°	29"	4"	48 RCP(B)
#2	1166.32'	48" RCP B	In 36 IN TEE	N/A	180°	29"	4"	48 RCP(B)

Elevation (View A-A)

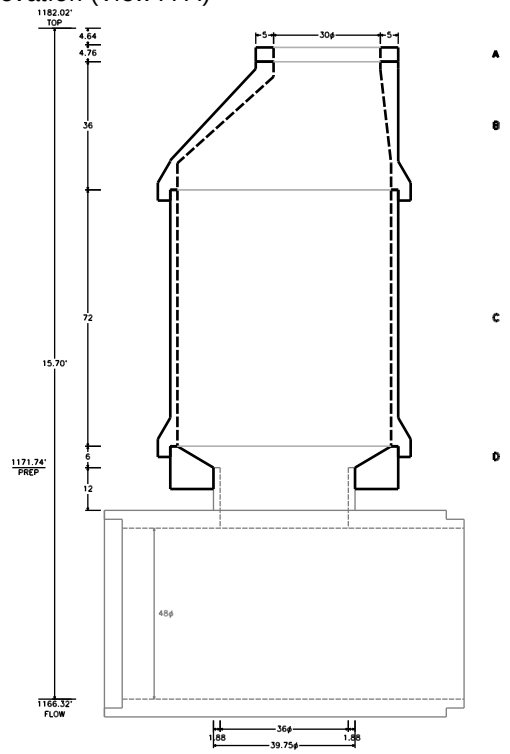

Plan View

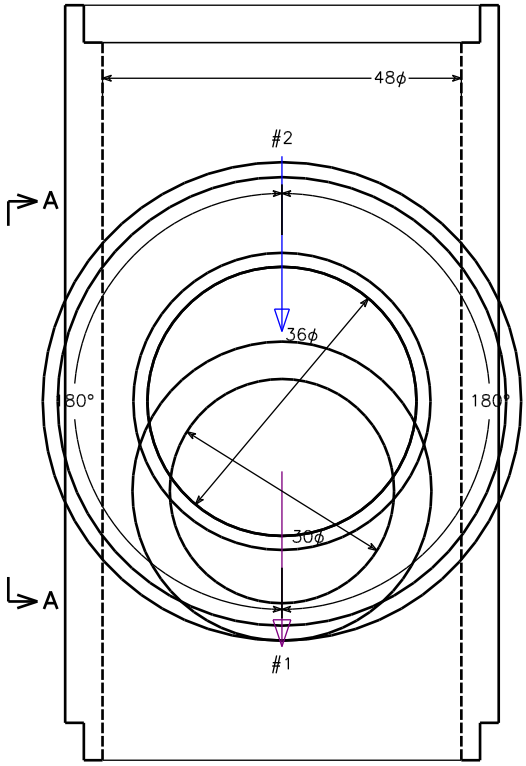

BOM For Stack

ID	Description	Part Number	Qty.	Weight
	1.25 IN X 14 FT JOINT MASTIC ROLL	MASJ	4	
A	30 IN X 4 IN POLYMER GRADE RING	MHGR30X4	1	190
B	60 IN X 3 FT ECC POLYMER CONE W/ 30" ACCESS	MHC6030	1	2,200
C	60 IN X 6 FT POLYMER MH SECTION	MHS6072	1	2,900
D	36 IN TEE ADAPTOR 60 IN	56003-TL	1	
	Totals (precast, lbs.)		4	5,290

ARMOROCK™

1575 W Horizon Ridge Parkway
#530427
Henderson, NV 89012

207 Heritage Court
Sulphur Springs, TX 75482

1708 Turkey Creek Road
Plant City, FL 33566

702-824-9702
www.armorock.com

APPROVED BY: _____

Structure: Tee 756009378
Job Number: AZ2402
Job Name: Price Road 66" Rehab (Insert Material)
Job Location: Chandler, AZ
Maricopa County
Contractor: All Bidders
Agency:
Engineer:

Based on:
Take Off By: 7/17/2025 PMcRae

Design Build Height

Rim	+	1,186.19'
Outlet Invert	-	1,165.37'
Design Height	=	20.82'
To Highest Pipe	-	0.03'
Pipe Inner Dia.	-	4.00'
Pipe Wall	-	0.42'
Pour Above	-	0.17'
Above Base	=	16.21'

Stack Build Height

Ring	+	0.39'
Adjustment	+	1.32'
Eccentric Slab	+	0.50'
Risers	+	14.00'
Above Base	=	16.21'
Contractor Base	+	4.61'
Design Height	=	20.82'

Ship Date:
Ring: 30" City of Chandler CAP R&C By Others
Channel: BASE POURED IN FIELD BY CONTRACTOR
Reduction:
Notes: Confirm structure design

Openings

ID	Invert	Pipe Size	Connector	Hole Size	Angle	To CL	Top to Top	Hole Former
#1	1165.37'	48" RCP B	In 48 IN CIP Base	N/A	0°	31"	-5.64"	48 RCP(B)
#2	1165.40'	48" RCP B	In 48 IN CIP Base	N/A	180°	31.36"	-6"	48 RCP(B)

Elevation (View A-A)

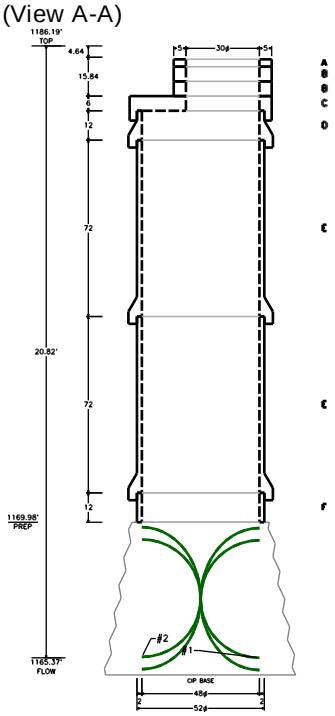

Plan View

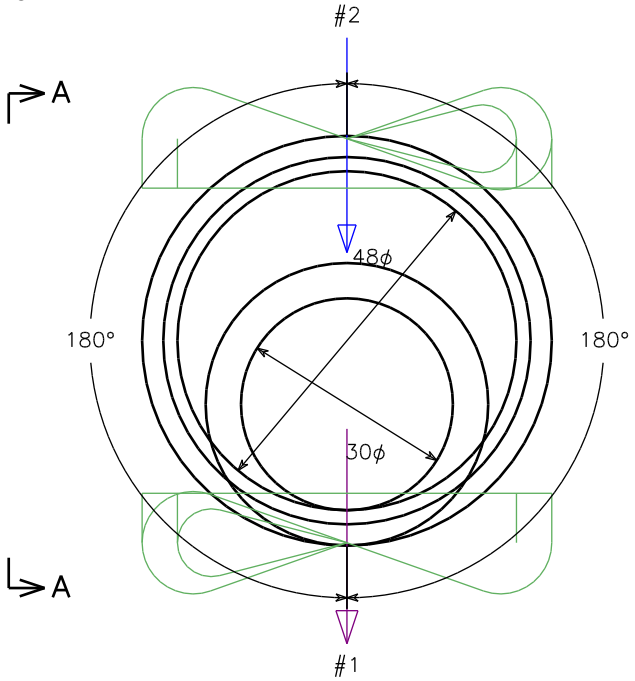

BOM For Stack

ID	Description	Part Number	Qty.	Weight
	1.25 IN X 14 FT JOINT MASTIC ROLL	MASJ	4	
A	30 IN X 3 IN POLYMER GRADE RING	MHGR30X3	1	140
B	30 IN X 6 IN POLYMER GRADE RING	MHGR30X6	2	560
C	48 IN ECC POLYMER LID FLAT W/ 30" ACCESS	MHL4830	1	1,200
D	48 IN X 1 FT POLYMER MH SECTION	MHS4812	1	730
E	48 IN X 6 FT POLYMER MH SECTION	MHS4872	2	4,800
F	48 IN X 1 FT POLYMER MH SECTION NO BELL	MHS4812NB	1	320
	Totals (precast, lbs.)		8	7,750

ARMOROCK™

1575 W Horizon Ridge Parkway
#530427
Henderson, NV 89012

207 Heritage Court
Sulphur Springs, TX 75482

1708 Turkey Creek Road
Plant City, FL 33566

702-824-9702
www.armorock.com

APPROVED BY: _____

Structure: Tee 756011281
Job Number: AZ2402
Job Name: Price Road 66" Rehab (Insert Material)
Job Location: Chandler, AZ
Maricopa County
Contractor: All Bidders
Agency:
Engineer:

Based on:
Take Off By: 7/17/2025 PMcRae

Design Build Height

Rim	+	1,183.89'
Outlet Invert	-	1,165.83'
Design Height	=	18.06'
Pipe Inner Dia.	-	4.00'
Pipe Wall	-	0.42'
Pour Above	-	0.17'
Above Base	=	13.48'

Stack Build Height

Ring	+	0.39'
Adjustment	+	0.59'
Eccentric Slab	+	0.50'
Risers	+	12.00'
Above Base	=	13.48'
Contractor Base	+	4.58'
Design Height	=	18.06'

Ship Date:
Ring: 30" City of Chandler CAP R&C By Others
Channel: BASE POURED IN FIELD BY CONTRACTOR
Reduction:
Notes: Confirm structure design

Openings

ID	Invert	Pipe Size	Connector	Hole Size	Angle	To CL	Top to Top	Hole Former
#1	1165.83'	48" RCP B	In 48 IN CIP Base	N/A	0°	31"	-6"	48 RCP(B)
#2	1165.83'	48" RCP B	In 48 IN CIP Base	N/A	190°	31"	-6"	48 RCP(B)

Elevation (View A-A)

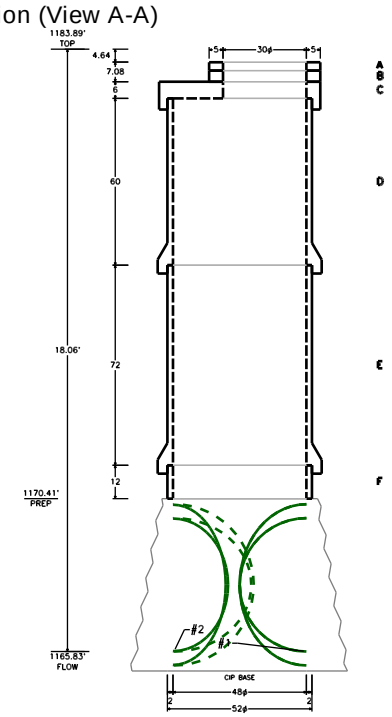

Plan View

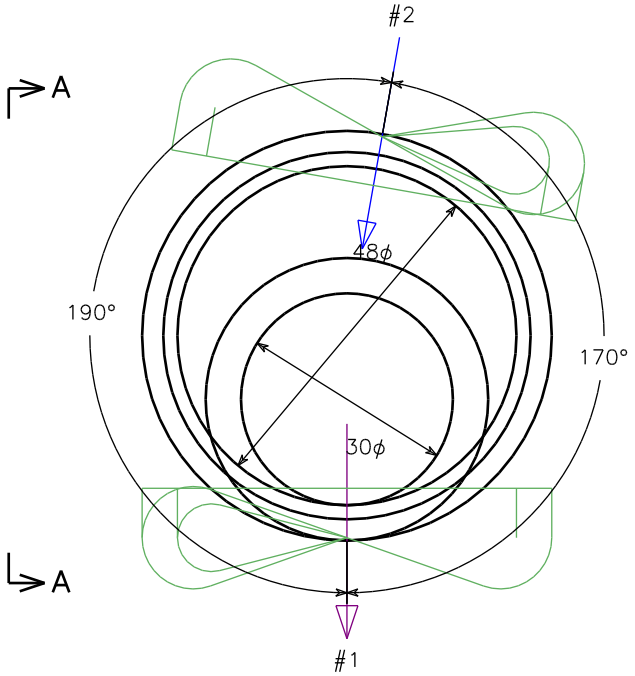

BOM For Stack

ID	Description	Part Number	Qty.	Weight
	1.25 IN X 14 FT JOINT MASTIC ROLL	MASJ	3	
A	30 IN X 3 IN POLYMER GRADE RING	MHGR30X3	1	140
B	30 IN X 4 IN POLYMER GRADE RING	MHGR30X4	1	190
C	48 IN ECC POLYMER LID FLAT W/ 30" ACCESS	MHL4830	1	1,200
D	48 IN X 5 FT POLYMER MH SECTION	MHS4860	1	2,000
E	48 IN X 6 FT POLYMER MH SECTION	MHS4872	1	2,400
F	48 IN X 1 FT POLYMER MH SECTION NO BELL	MHS4812NB	1	320
	Totals (precast, lbs.)		6	6,250

ARMOROCK™

1575 W Horizon Ridge Parkway
#530427
Henderson, NV 89012

207 Heritage Court
Sulphur Springs, TX 75482

1708 Turkey Creek Road
Plant City, FL 33566

702-824-9702
www.armorock.com

APPROVED BY: _____

Structure: Tee 756013317
Job Number: AZ2402
Job Name: Price Road 66" Rehab (Insert Material)
Job Location: Chandler, AZ
Maricopa County
Contractor: All Bidders
Agency:
Engineer:

Based on:
Take Off By: 7/17/2025 PMcRae

Design Build Height

Rim	+	1,184.78'
Outlet Invert	-	1,165.65'
Design Height	=	19.13'
To Highest Pipe	-	0.03'
Pipe Inner Dia.	-	4.00'
Pipe Wall	-	0.42'
Pour Above	-	0.17'
Above Base	=	14.52'

Stack Build Height

Ring	+	0.39'
Adjustment	+	0.63'
Eccentric Slab	+	0.50'
Risers	+	13.00'
Above Base	=	14.52'
Contractor Base	+	4.61'
Design Height	=	19.13'

Ship Date:
Ring: 30" City of Chandler CAP R&C By Others
Channel: BASE POURED IN FIELD BY CONTRACTOR
Reduction:
Notes: Confirm structure design

Openings

ID	Invert	Pipe Size	Connector	Hole Size	Angle	To CL	Top to Top	Hole Former
#1	1165.65'	48" RCP B	In 48 IN CIP Base	N/A	0°	31"	-5.64"	48 RCP(B)
#2	1165.68'	48" RCP B	In 48 IN CIP Base	N/A	180°	31.36"	-6"	48 RCP(B)

Elevation (View A-A)

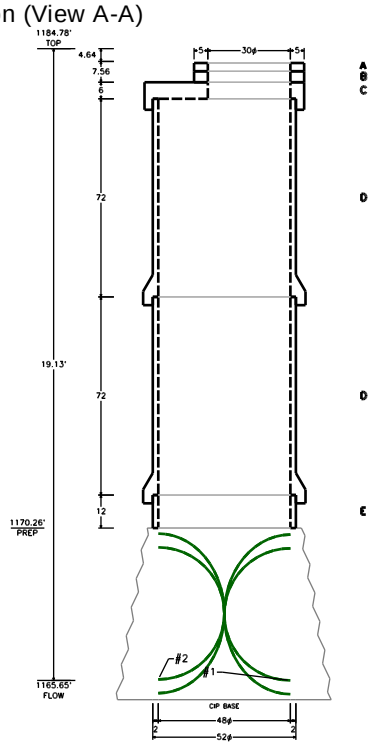

Plan View

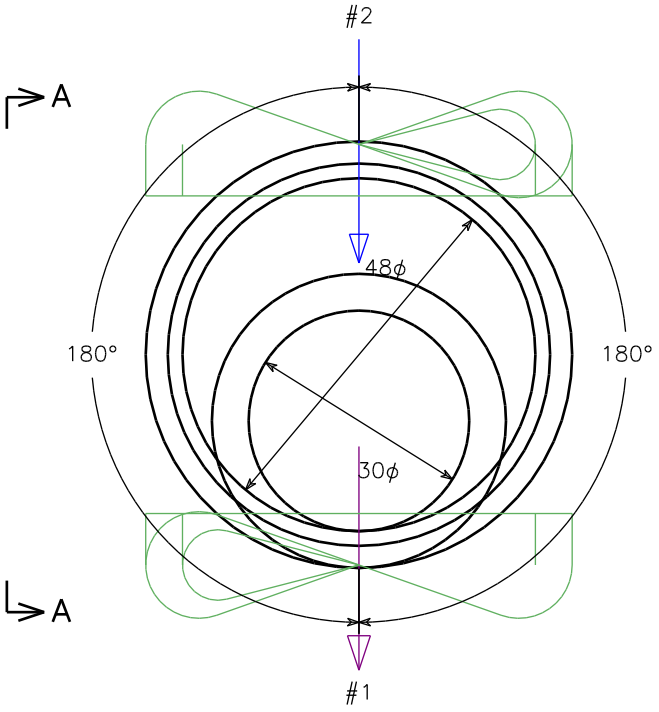

BOM For Stack

ID	Description	Part Number	Qty.	Weight
	1.25 IN X 14 FT JOINT MASTIC ROLL	MASJ	3	
A	30 IN X 3 IN POLYMER GRADE RING	MHGR30X3	1	140
B	30 IN X 4 IN POLYMER GRADE RING	MHGR30X4	1	190
C	48 IN ECC POLYMER LID FLAT W/ 30" ACCESS	MHL4830	1	1,200
D	48 IN X 6 FT POLYMER MH SECTION	MHS4872	2	4,800
E	48 IN X 1 FT POLYMER MH SECTION NO BELL	MHS4812NB	1	320
	Totals (precast, lbs.)		6	6,650

SONCO CONSTRUCTION

4927 Toronto Ave
Fontana CA 92336
(909) 223-1280 / (909) 260-4749
license #911666 / dir #1000024656

PROPOSAL

To:	Travis Monk	Proposal #	1800-11-02
Company:	B&F Contracting	Proposal Date:	07/18/25
		Project Name	Chandler 66
Phone:	602-326-9282	Project Address:	Chandler AZ
Email	Tmonk@bfcontracting.com		

UNITS	DESCRIPTION	UNIT PRICE	LABOR and MATERIAL
	Furnish and install ArmorLok PVC Liner, to new Junction structure.		
	Junction Structure B		
	Install Armorlok Liner to wall, Deck and around all Pipe ends. Weld all seam and spark test. Approx: 3810 sqft		**$ 102,870.00**
	Install Armorlok Shieldlok system to all grout fill. Weld all seams and sparktest. Approx:1200 sqft		**$ 90,000.00**
			$ 192,870.00

***Included in this Proposal**

(1) All labor and equipment necessary. (2) ArmorLok Certified PVC welding Technicians.
(3) Unlimited access to work area. (4) Typical ventilation (5) Top man and confined space restrictions
(6) must be clean and dry

*** Excluded from this Proposal**

(1)Traffic control. (2) Inspection (3) Exterior water proofing. (4) Sewer bypass and/or plugs.
(5) Damage caused to liner due to operations of other trades. (6) Spray coatings.
(7) Permits, Bonds, Liquidated Damages. (8) Dewatering

Sonco Construction, Inc.

By: Richard Chico

Date:

Prime Contractor

By:

Date:

PAYMENT CONDITIONS

BILLING TURNED IN BY THE 25th OF EACH MONTH WILL BE PAID BY THE 10th DAY OF THE FOLLOWING MONTH

SIGNATURE OF THIS DOCUMENT IS TO BE CONSIDERED ACCEPTANCE OF THESE TERMS AND AN AUTHORIZATION TO PROCEED.

THIS PROPOSAL MAY BE SUBJECT TO CHANGE OR CANCELLATION IF NOT ACCEPTED WITHIN 30 DAYS.

QUIKRETE
What America's Made Of
CONSTRUCTION MATERIALS

Quote Number:	**Q10018482-2**
Created On:	7/17/2025
Quote Expires On:	8/16/2025

Project:	**COC- CMAR 66" Sewer**	**Account**:	**B & F Contracting Inc**
Project Address:	S Price Rd & 202 South Chandler, AZ 85224	Account Number:	40032
		Contact:	Wes Johnston
Estimated Start Date:	9/1/2025	E-mail:	wesley.johnston@bfcontracting.com
Project End Date:	4/1/2026	Phone:	480-489-9893

Customer Service:
Sales Office Address: PO Box 741805 Kilgore Companies
Los Angeles, CA 90074-1805

READY-MIX (SELECTED AS LOWEST)

MATERIAL PRICING

Item Code	Description	Quantity	Unit Price
PHCLSM	**1/2 SACK ABC SLURRY (COP)**	5,400 CY	$97.00
	Escalator of $2.00 effective 10/1/2025 recurring every 12 months		
13004	**MAG-A 3000 PSI**	60 CY	$136.00
	Escalator of $4.00 effective 10/1/2025 recurring every 12 months		
14004	**MAG-AA 4000 PSI, 1" ROCK**	30 CY	$142.00
	Escalator of $4.00 effective 10/1/2025 recurring every 12 months		
50020	**2000 PSI GROUT W/ASH, ASTM 476**	210 CY	$151.00
	Escalator of $4.00 effective 10/1/2025 recurring every 12 months		

SUNDRIES AND SURCHARGES

Item	Comments	Price	Unit
Fuel Surcharge RMX		$35.00	EA
WEEKEND TRUCK TIME		$50.00	HRS
ENVIRONMENTAL CHARGE		$25.00	EA
Load Size: 0.00 > 6.00		$200.00	CY
Additional Products & Services			
Hot Water		$2.50	PCY
Recover per 1/2 hour		$4.00	OZ
Micro Fiber		$7.50	PCY
Color Wash Out		$25.00	EA
Nitrogen Cooling		$9.50	GAL
Non-Chloride Accerator (per 1%)		$0.00	GAL
Macro Fiber (Structural)		$7.00	PCY
Color Seal		$0.00	PCY
Chilled Water		$2.50	PCY

Respectfully,

Arizona Materials

Sales Rep: Randy Schmolke
Phone: 602-342-6595
Email: rschmolk@summit-materials.com

Customer Acceptance

Signed by:

Date:

__*Taxable* __*Tax Exempt (Attach Certificate)*

READY-MIX (SELECTED AS ALTERNATE)

Martin Marietta
4129 E Van Buren St, Suite 200
Phoenix, AZ 85008
(602) 685-3400

QUOTE NUMBER: 155376
SALES REP: Villegas, Raul
(480) 298-0157
Raul.Villegas@MartinMarietta.com

PROJECT NAME	JOB / P. O. NUMBER	QUOTE DATE
66"- REDUNDANT SEWER PH II	83734 /	7/17/2025 2:12:25 PM
PROJECT LOCATION		**BID DATE**
PRICE RD AND LOOP 202 CHANDLER, AZ		March 24, 2025
		PROJECT START DATE
		July 14, 2025
		QUOTE EXPIRATION DATE
		March 31, 2026
		See Price Escalators

CUSTOMER	B & F CONTRACTING INC
CONTACT	TRAVIS MONK
	TMONK@BFCONTRACTING.COM
STREET ADDRESS	11011 N 23RD AVE
CITY, STATE, ZIP	PHOENIX, AZ 85029-4828
CUSTOMER NO.	992678

PRODUCT CODE	MATERIAL DESCRIPTION	UOM	USAGE	SLUMP	QTY	PRICE
PHCLSM	1/2 SACK ABC SLURRY (PHCLSM1/2)	CY	SLURRY	7-11	5400	$104.00
2303141	MAG A, 1"	CY	SITE WORK	3-5	60	$140.00
2403141	MAG AA, 1"	CY	SITE WORK	3-5	22	$145.00
422033A	2000 PSI-F, 30% 3/8" GROUT (ASTM C-476)	CY	GROUT	8-11	210	$149.00

ADDITIONAL COMMENTS *PRICES DO NOT INCLUDE TAX*

ESCALATION NOTES:
CUBIC YARD PRICE INCREASE: 1/1/2026 $8.00

Add:

$10.00	Per Load Transportation Surcharge - Add to Above Pricing
$1.00	Per Cubic Yard Environmental Fee - Add to Above Pricing
$1.00	Per Cubic Yard Tempered Water Service Fee
$10.00	Per Cubic Yard Saturday Premium Charge

Add Miscellaneous Extra Charges:

$8.00	Per Cubic Yard per each 1% Non Chloride Accelerator (available in 0.25% increments)
$3.00	Per Cubic Yard per Each 30 Minute Increment of Hydration Stabilizer (Retarder)
$7.00	Per Cubic Yard Mono/Micro Fiber (1LB per Cubic Yard)
$4.00	Per Pound of Color per Sack of Cement per Cubic Yard
$50.00	Color Washout Fee per Load
$250.00	Per Load Short Load Delivery Fee (Orders of 6 CYs or Less)
$2.00	Per Minute of Wait Time per Load After 45 Minutes (on job standby)
$5.00	Per Gallon Nitro (3 gallons is equivalent to 20 LBs. of ice) Call for Availability
$0.75	Per Pound Ice
$8.00	Per Cubic Yard Cancellation Fee within 24 Hours of Scheduled Start Time ($200 minimum fee)
$100.00	Per Load Multi-Stop Delivery Fee (per stop)

Above pricing is valid for 30 days from quote date, written quote acceptance is required to hold pricing beyond 30 days.
Prices are FOB job site unless noted otherwise and do not include taxes. Sales Tax owed unless exempt documentation is received before the first pour.
See item 7. TERMS: NET 30 DAYS. If not paid when due, Applicant agrees to pay interest charges at the rate of 1.5% per month or the maximum lawful rate, whichever is lower, and Seller's reasonable costs of collection, including reasonable attorneys' fees.

Signature:_____ Quote Date: 7/17/2025 Accepted by: _____

Please Note

All concrete as bid is per 90 minute max delivery and 95 degree max concrete temperature unless noted otherwise. All Concrete as Bid contains Type F Ash and normal weight aggregate unless specifically noted. All concrete pricing above is valid from Monday thru Friday during normal business hours unless noted otherwise. Aggregates are a naturally occurring material which can contain particles that degrade or stain concrete. It is not possible to completely remove all such particles; however, the occurrence is infrequent, and the bulk aggregate meets the Limits for Deleterious Substances and Physical Property Requirements of Coarse Aggregate for Concrete as outlined in ASTM C 33. Martin Marietta does not warranty against these infrequent occurrences.

Minimum amount of standard concrete for deliveries is 2 cubic yards, specialty concrete is 4 cubic yards. Buyer is responsible for safe access to work area and wash out containment area for all deliveries.

READY-MIX (NOT SELECTED)

DESERT READY MIX

READY MIX CONCRETE SALES AND SERVICE
4011 PRESIDO STREET
MESA, AZ 85215
OFFICE: 480-428-2280 FAX: 480-985-4248

Begin Date:	February 19, 2025	Quote # :	25967
Expiration Date:	December 31, 2025	MAP/GRID	

Customer: **B & F CONTRACTING INC**
Customer Code: BFCO001
Address: 11011 N 23RD AVE
PHOENIX, AZ 85029
Contact: NANCY A/P
Phone: 623-582-1170 O
Fax:
Project: **CITY OF CHANDLER CMAR 66-INCH REDUNDANT**
Job Address: PRICE ROAD & LOOP 202
Terms Description: **2% 10TH NET 30**

Item Code	Item Description	Est. Qty	Price
S500501	PHCLSM.5 (1/2 SK SLURRY COP)	5,400	$108.00
SRP104	1/2SK MAG CLSM		$108.00
TC	TEMPERATURE CONTROL		$1.00
A203001	MAG A 3000 PSI W/ASH	60	$140.00
A204001	MAG AA 4000 PSI W/ASH	22	$148.00
G402061	2000 PSI GROUT	210	$165.00
AG010003 DELIVERED	MAG SPEC ABC (NON-LIME)	15,000	$20.00
AG020003 DELIVERED	CONCRETE SAND	200	$25.00
AG040002 DELIVERED	3/8 REJECT BEDDING CHIPS ***IF AVAILABLE***	1,000	$18.00
AG040001 DELIVERED	#8 (3/8 CONCRETE ROCK)		$23.25

Ready Mix Additional Fees

Fee ID *	UOM	Price
E01	cy	3.25
FSC	LOAD	TBD

Ready Mix Minimum Load Fee

Less than or equal to	UOM	Price
2	Load	0
3.5	Load	0
5.5	Load	0

- Normal operating hours are Mon-Fri, Sat, Sun or Holidays are subject to surcharges.
- Color added at no expressed guarantee.
- Drivers do not accept cash or make change.
- Desert Ready Mix reserves the right to increase prices due to RAW Material cost increases such as Cement, Fly Ash, Aggregates or unexpected Fuel increases.
- All specialized aggregate sales are based on availability.
- Deliveries less than 6 Cubic yards are subject to our minimum load charges.
- This quote does not guarantee product or service availability
- All Aggregates and Concrete loads have an additional fuel surcharge.

Quoted By: JUSTIN DAWSON

* E – Environmental | S – Saturday Fee | F – Fuel Surcharge

Quote Number: Q25-100-Rev.02
Date of Quote: 7/16/2025
Project Name: **Chandler 66" Redundant Sewer CMAR**
Jobsite Location: Chandler, Arizona
Owner: City of Chandler
Bid Date: **N/A**
Type of Job: Gravity Sewer
Agent: N/A

Hobas Pipe USA, Inc.
1413 E. Richey Road
Houston, Texas 77073
+1 (800) 856-7473

FIBERGLASS PIPE PRODUCTS SUPPLY-QUOTE

To assist you in preparing your bid for the above referenced project, we are pleased to offer you the following prices for your consideration:

FIBERGLASS PIPE

QUANTITY	UNIT	SIZE (DN) in	CLASS (PN) PSI	STIFFNESS (SN) PSI	TYPE OF JOINT	PIPE LENGTH LF	UNIT PRICE USD $	TOTAL USD $
640	LF	66"	0 PSI	71 PSI	Flush Reline*	20'	$ 383.00	$ 245,120
960	LF	66"	25 PSI	46 PSI	Coupling*	20'	$ 330.00	$ 316,800
220	LF	48"	25 PSI	46 PSI	Coupling*	20'	$ 186.00	$ 340,800
42	EA	48"-66"	Freight Per Truck (Houston to Above Jobsite)**				$ 2,800.00	$ 117,600
* No Freight Included - See Separate Freight Rates Above								
** Freight Costs Shown Are Based on Rates at Bid Time, and on Quantities Shown. Buyer Will pay								
Actual Freight Invoice Amounts. Any Increase or Decrease in the freight is for Account of the Buyer.								

Hobas Package Total: $ 1,020,320

Remarks:

Line Item quanitites are based on available information, if it differs use Unit Pricing

Additional Information:

1. The prices quoted above are firm for acceptance within 30 days of latest quote date. Final prices are valid for 1 year after receipt of Order Confirmation.
2. Applicable sales taxes are to be added to the net amount of the quoted prices on transactions which are not exempt. Buyer is responsible for all applicable taxes.
3. Terms: Net 30 days from date of invoice, subject to credit approval. Payments to be made via ACH. Payment bonds required on all public jobs. Private jobs without payment bonds will be required to pay 50% upfront with balance due in 30 days or provide a "Standby Letter of Credit".
4. Prior to agreeing to a delivery start date and delivery rate, HOBAS requires a signed quotation or acceptable purchase order, receipt of approved submittal, and payment bond information.
5. Freight Terms: F.O.B. above referenced Jobsite full freight quantities, with unloading by others (Incoterms 2020).
6. HOBAS manufactures its pipe products to the specifications provided by the engineer and/or project owner and warrants them to be in line with such specifications as set forth in the attached General Terms, unless stated herein or any accompanying documentation.
7. HOBAS cannot be responsible for and makes no warranties or representations as to the selection of a suitable pipe design for any specific job and/or methods used in installation of the pipe products.
8. To optimize shipments, pipe diameters 51" thru 60" ship on steel racks & must ship in multiples of 10 loads over a 10 day time period. Contractor must store & reload racks for return to yard for prices quoted to be valid. If contractor does not wish to do this, alternate, increase freight rates are available.
9. The enclosed HOBAS General Terms are hereby incroporated and expressly apply to this quotation.

ACCEPTANCE

Subject to being awarded the above referenced project we hereby order the outlined pipe products.

COMPANY: _____

BY: _____

TITLE: _____

For information concerning this quote contact

Stephen Alston - Area Manager

Cell Phone (801) 888-2772

Quotation Approved by:

General Terms in the next pages

FULLERFORM
SINCE 1947

Fullerform Systems Inc.
24 East Pioneer St.
PHOENIX, AZ 85040
Phone (602) 268-5701

Quotation

EXPIRATION DATE	QUOTE NUMBER
03/30/2025	S100052097

	PAGE NO.
Fullerform Systems Inc. 24 East Pioneer St. PHOENIX, AZ 85040 Phone (602) 268-5701	1 of 1

QUOTE TO:

B&F CONTRACTING, INC
11011 N. 23RD AVENUE
PHOENIX, AZ 85029

SHIP TO:

B&F CONTRACTING, INC
11011 N. 23RD AVENUE
PHOENIX, AZ 85029

CUSTOMER NUMBER	CUSTOMER PO NUMBER	JOB NAME / RELEASE NUMBER	SALESPERSON
129	City of Chandler Redundant Sew		BRYCE YNCERA

WRITER	SHIP VIA	TERMS	SHIP DATE	FREIGHT ALLOWED
JJ PARKINSON		1% disc 20 days, Net 30	02/28/2025	No

ORDER QTY	DESCRIPTION	UNIT PRICE	EXT PRICE
	Project: City of Chandler Redundant Sewer Spec: City of Chandler Bid Date: 7/18/2025 Pricing Valid: 30 Days		
	48" Heavy Wall Sewer Pipe ----------		
224ea	48" PS115 SDR26 PVC Non Return / Non Cancellable	344.681/ea	77208.52
2ea	3DT-GREEN / 3DT-SEWER 3" X 1000' ROLL OF DETECTABLE SEWER TAPE GREEN	40.500/ea	81.00
2ea	14UF GREEN WIRE X 500 ||	76.667/ea	153.33

*ALL PRODUCTS WILL BE PRICED IN EFFECT AT TIME OF SHIPMENT.
*DUE TO SUPPLY CHAIN PRICE INCREASES.

Subtotal	77442.85
S&H Charges	0.00
Estimated Tax	0.00
Amount Due	77442.85

United Rentals®
TRENCH SAFETY

PROPOSAL

To: B&F Contracting **Date:** 7/17/2025
Project: 101/202 66 Inch Redundant Sewer Rehab
Project Location: Chandler, AZ
Plans: United Rentals (North America), Inc. ("United Rentals" or "Company") proposes to furnish equipment ("Equipment") and engineering for a shoring system (the "System") as follows.

Shoring System:
System Type: 4-Sided Slide Rail Pit Application. **(Engineering review required)**
System Dimensions: 48' wide x 48' long x 32' deep.
Phasing Required: Yes, Removal of rolling strut carts after Tie Backs and Sacrificial are installed.
Sheeting Required: No.
Benching/Sloping Required: No.
Soil Description: Soil is dense sand over very dense sand over medium dense sand based on Bore B-1 by Ninyo & Moore dated 2-25-21.
Dewatering Required: Base of excavation on interior and exterior of system.
Surcharge Setback: HS20-44 Vehicular Traffic 20', Waterways 30', Structures 50'.
Additional Notes: The proposed system is based on the information available, adverse site or soil conditions may affect design and engineering.

Rental:

Daily Rate before taxes and freight	$ 10,087.31
Weekly Rate before taxes and freight	$ 20,174.62
Monthly Rate before taxes and freight	$ 50,436.56
Total Delivery and Pickup of all Equipment (12 Trucks Each Way)	$ 20,800.00
Rigging Box RPP	$ 151.05

Sale Item :

Sacrificial Beams (2 at 50')	$ 15,000.00
Beam Price to be quoted at time of installation due to market fluctuation	
Engineering Fee (see Note 6)	$ 4,000.00
Shoring Advisor: ($750 day estimated 4 days)	$ 3,000.00

Below are optional equipment and/ or services available upon request:

Pertaining to Slide Rail Shoring systems only

Panel Puller (see Note 14)		$975.00
Rental Protection Plan System (See Note 13)	15% of Rental	$

Pertaining to Sheeting, Bracing and beam systems only

Vibratory Hammer Rental Weekly Rate (HPSI 80E or equivalent)	$ XXXX	Initial_____

Please select one of the following options:

Sheeting Service Fee (see Note 11)	10% of sheet rental up to 1st month only	Initial_____
Rental Protection Plan (see Note 12)	15% of total rental contract for full duration	Initial_____

United Rentals®
TRENCH SAFETY

PROPOSAL

To: B&F Contracting **Date:** 7/17/2025
Project: 101/202 66 Inch Redundant Sewer Rehab
Project Location: 331 S Price Rd. Chandler, AZ 85224
Plans: United Rentals (North America), Inc. ("United Rentals" or "Company") proposes to furnish equipment ("Equipment") and engineering for a shoring system (the "System") as follows.

Shoring System:
System Type: 4-Sided Slide Rail Pit Application
System Dimensions: 20' wide x 20' long x 27' deep.
Phasing Required: No.
Sheeting Required: Yes, Lower 8' on (3) adjacent walls.
Benching/Sloping Required: No.
Soil Description: Soil is dense sand over very dense sand over medium dense sand based on Bore B-1 by Ninyo & Moore dated 2-25-21. Dewatering Required: Base of excavation on interior and exterior of system.
Surcharge Setback: HS20-44 Vehicular Traffic 20', Waterways 30', Structures 50'.
Additional Notes: The proposed system is based on the information available, adverse site or soil conditions may affect design and engineering.

Rental:

Daily Rate before taxes and freight	$ 2,306.37
Weekly Rate before taxes and freight	$ 4,612.75
Monthly Rate before taxes and freight	$ 11,531.87
Total Delivery and Pickup of all Equipment (4 Trucks Each Way)	$ 400.00
Rigging Box RPP	$143.85

Sale Item :

Engineering Fee (see Note 6)	$ 2,750.00
Shoring Advisor: ($750 day estimated 2 days)	$ 1,500.00

Below are optional equipment and/ or services available upon request:

Pertaining to Slide Rail Shoring systems only

Panel Puller (see Note 14)		$975.00
Rental Protection Plan System (See Note 13)	15% of Rental	$ XXXX

Pertaining to Sheeting, Bracing and beam systems only

Vibratory Hammer Rental Weekly Rate (HPSI 80E or equivalent)		$ XXXX	Initial_____

Please select one of the following options:

Sheeting Service Fee (see Note 11)	10% of sheet rental up to 1st month only	Initial_____
Rental Protection Plan (see Note 12)	15% of total rental contract for full duration	Initial_____

United Rentals

RENTAL QUOTE

BRANCH DA8
503 W 3RD AVE
MESA AZ 85210-1246
602-357-7670
602-357-7671 FAX

250597626

Customer #	: 220648
Quote Date	: 07/17/25
Estimated Out	: 09/30/25 09:00 AM
Estimated In	: 10/28/25 09:00 AM
UR Job Loc	: 331 S PRICE RD, CHAN
UR Job #	: 895
Customer Job ID:	
P.O. #	: QUOTE
Ordered By	: TRAVIS MONK
Written By	: BRANDON SOWELL
Salesperson	: BRANDON SOWELL

Job Site

101/202 66" SEWER LINE REHAB
331 S PRICE RD
CHANDLER AZ 85224-4900

Office: 623-582-1170

B & F CONTRACTING
A1011 N 23RD AVE
PHOENIX AZ 85029-4828

This is not an invoice
Please do not pay from this document

RENTAL ITEMS:

Qty	Equipment	Description	Minimum	Day	Week	4 Week	Estimated Amt.
2	9418471	TRENCH BOX 8' X 24' (6" FB)		80.14	320.54	961.63	1,923.26
1	9418566	TRENCH BOX 10' X 24' (6" FB)		101.51	406.02	1,218.07	1,218.07
1	9418530	TRENCH BOX 10' X 16' (6" FB)		76.93	307.72	923.17	923.17
2	9418435	TRENCH BOX 8' X 16' (6" FB)		64.11	265.44	769.31	1,538.62
6	940/5620	20' END LOADING SPREADER		63.00	252.40	757.00	4,542.00
18	940/5538	SPREADER BAR (KIT) 8" X 20'		21.37	106.85	320.54	5,769.72
360	940/5655	8" SPREADER BAR (LINEAR FEET)					
16	941/8103	STACKING PINS FOR STEEL BOXES		1.12	2.04	5.09	81.44
1	940/9560	LADDER HANGER FOR TRENCH SHIELD		2.49	9.97	19.92	19.92
1	6759415	TRENCH BRIDGE STEEL 8'		14.86	74.28	222.85	222.85
1	330/7120	LIFTING BRIDLE 4 LEG X 20'		18.57	74.28	222.85	222.85
6	944/9944	ROAD PLATE 8' X 16'		10.58	74.08	296.33	1,777.98
300	942/7280	SHEETING PZ27 PAIRED SHEETS (LINEAR FT) (10) 30' SHEETS		1.24	2.17	4.96	1,488.00

Rental Subtotal: 19,727.88

SALES/MISCELLANEOUS ITEMS:

Qty	Item		Price	Unit of Measure	Extended Amt.
1	PROPERTY TAX SURCHARGE	[DRSURAZ/MCI]	295.920	EACH	295.92
1	DELIVERY CHARGE		215.000	EACH	215.00
1	PICKUP CHARGE		215.000	EACH	215.00

Sales/Misc Subtotal: 725.92

Agreement Subtotal: 20,453.80
Tax: 1,697.68
Estimated Total: 22,151.48

COMMENTS/NOTES:

CONTACT: TRAVIS MONK
CELL#: 602-326-9282

This proposal may be withdrawn if not accepted within 30 days. The above referenced Rental Protection Plan, environmental, and tax charges are estimates and are subject to change.

NOTICE: This is not a rental agreement. The rental of equipment and any items listed above is subject to availability and subject to the terms and conditions of the Rental and Service Agreement, which are available at https://www.unitedrentals.com/legal/rental-service-terms-US and which are incorporated herein by reference. A COPY OF THE RENTAL AND SERVICE AGREEMENT TERMS ARE AVAILABLE IN PAPER FORM UPON REQUEST.

United Rentals

RENTAL QUOTE

BRANCH DA8
503 W 3RD AVE
MESA AZ 85210-1246
602-357-7670
602-357-7671 FAX

250597793

Customer #	: 220648
Quote Date	: 07/17/25
Estimated Out	: 09/30/25 09:00 AM
Estimated In	: 10/28/25 09:00 AM
UR Job Loc	: 331 S PRICE RD, CHAN
UR Job #	: 895
Customer Job ID:	
P.O. #	: QUOTE
Ordered By	: TRAVIS MONK
Written By	: BRANDON SOWELL
Salesperson	: BRANDON SOWELL

Job Site

101/202 66" SEWER LINE REHAB
331 S PRICE RD
CHANDLER AZ 85224-4900

Office: 623-582-1170

B & F CONTRACTING
A1011 N 23RD AVE
PHOENIX AZ 85029-4828

This is not an invoice
Please do not pay from this document

RENTAL ITEMS:

Qty	Equipment	Description	Minimum	Day	Week	4 Week	Estimated Amt.
2	9418471	TRENCH BOX 8' X 24' (6" FB)		80.14	320.54	961.63	1,923.26
1	9418566	TRENCH BOX 10' X 24' (6" FB)		101.51	406.02	1,218.07	1,218.07
1	9418530	TRENCH BOX 10' X 16' (6" FB)		76.93	307.72	923.17	923.17
2	9418435	TRENCH BOX 8' X 16' (6" FB)		64.11	265.44	769.31	1,538.62
16	941/8103	STACKING PINS FOR STEEL BOXES		1.12	2.04	5.09	81.44
1	940/9560	LADDER HANGER FOR TRENCH SHIELD		2.49	9.97	19.92	19.92
1	6759415	TRENCH BRIDGE STEEL 8'		14.86	74.28	222.85	222.85
1	330/7120	LIFTING BRIDLE 4 LEG X 20'		18.57	74.28	222.85	222.85
6	944/9944	ROAD PLATE 8' X 16'		10.58	74.08	296.33	1,777.98
300	942/7280	SHEETING PZ27 PAIRED SHEETS (LINEAR FT) (10) 30' SHEETS		1.24	2.17	4.96	1,488.00
18	940/5530	SPREADER BAR (KIT) 8" X 16'		21.37	106.85	320.54	5,769.72
288	940/5655	8" SPREADER BAR (LINEAR FEET)					
6	940/5616	16' END LOADING SPREADER		50.40	201.92	605.60	3,633.60

Rental Subtotal: 18,819.48

SALES/MISCELLANEOUS ITEMS:

Qty	Item		Price	Unit of Measure	Extended Amt.
1	PROPERTY TAX SURCHARGE	[DRSURAZ/MCI]	282.294	EACH	282.29
1	DELIVERY CHARGE		215.000	EACH	215.00
1	PICKUP CHARGE		215.000	EACH	215.00

Sales/Misc Subtotal: 712.29

Agreement Subtotal: 19,531.77
Tax: 1,621.15
Estimated Total: 21,152.92

COMMENTS/NOTES:

CONTACT: TRAVIS MONK
CELL#: 602-326-9282

This proposal may be withdrawn if not accepted within 30 days. The above referenced Rental Protection Plan, environmental, and tax charges are estimates and are subject to change.

NOTICE: This is not a rental agreement. The rental of equipment and any items listed above is subject to availability and subject to the terms and conditions of the Rental and Service Agreement, which are available at https://www.unitedrentals.com/legal/rental-service-terms-US and which are incorporated herein by reference. A COPY OF THE RENTAL AND SERVICE AGREEMENT TERMS ARE AVAILABLE IN PAPER FORM UPON REQUEST.

RENTAL QUOTE

320 S. 19th Avenue, Phoenix AZ 85009
Phone: (602) 253-3311
Fax: (602) 253-3320

Sales Rep: Kevin Koehler
Phone: (602) 509-2231
Email: kevin.koehler@sunstateequip.com

Date: **7/16/2025**

Customer: B&F
Contact: Travis Monk
Phone: 602-326-9282
Email: tmonk@bfcontracting.com
Job Address: SR 101 & SR 202
Job/PO #: Chandler Redundant Sewer BORE PIT

	CATEGORY	DESCRIPTION	EACH DAILY	EACH WEEKLY	EACH MONTHLY
3	Steel Crossing Plates	8 X 20 END PROTECTION	$ 11.93	$ 83.51	$ 334.04
1	Trench Box - Steel	6' x 16' x 4"	$ 38.30	$ 153.20	$ 459.60
2	Trench Box - Steel	10' x 16' x 4"	$ 61.42	$ 245.68	$ 737.04
1	Trench Box - Steel	6' x 24' x 6"	$ 51.31	$ 205.24	$ 615.72
2	Trench Box - Steel	10' x 24' x 6"	$ 82.37	$ 329.48	$ 988.44
18	Trench Box - Accessories	Corrugated Hanger Plates 10-6', 8-20"	$ 6.95	$ 27.80	$ 83.40
12	Trench Box - Accessories	20' I-Beam Spreader	$ 20.00	$ 80.00	$ 240.00
12	Trench Box - Accessories	20' Pipe Spreader	$ 5.00	$ 20.00	$ 60.00
1	Trench Box - Accessories	Ladder Hanger	$ 2.49	$ 9.96	$ 29.88
4	Trench Box - Accessories	Stacking Pin (Set of 4)	$ 2.01	$ 8.04	$ 24.12
12	Trench Box - Accessories	Handrail	$ 7.00	$ 28.00	$ 84.00
2	Slings - Chain	4 Way Bridle 20' Box	$ 17.38	$ 69.52	$ 208.56
1	Trench Bridges	8'	$ 15.18	$ 60.72	$ 182.16
			DAILY	**WEEKLY**	**MONTHLY**
		SUBTOTAL - ESTIMATED RENTAL	$ 742.55	$ 3,077.57	$ 9,483.24
		TAX - 8.6%	$ 63.86	$ 264.67	$ 815.56
		TOTAL - ESTIMATED RENTAL	**$ 806.41**	**$ 3,342.24**	**$ 10,298.80**

QTY	SERVICE ITEMS	COST	UNIT	TOTAL COST
5	Delivery - Phoenix Metropollitan Area	$225.00	Each	$ 1,125.00
5	Pickup - Phoenix Metropolitan Area	$225.00	Each	$ 1,125.00
4	Wide Load Charge Delivery & Pick up	$50.00	Each	$ 200.00
1	Site Specific Enineering (For excavations over 20ft depth if required)	$1,500.00	Each	$ 1,500.00
		SUBTOTAL - ESTIMATED TRANSPORTATION/SERVICE ITEMS		$ 3,950.00
		TAX 8.6%		$ 210.70
		TOTAL - ESTIMATED TRANSPORTATION/SERVICE ITEMS		**$ 4,160.70**

After Hours/Wide Load charge of $150.00/per load if applicable/Freight is for Metro Phoenix unless noted.
Customers will be responsible for equipment assembly/disassembly.

Quoted By: **Kevin Koehler**

Customer Signature

QUOTE IS VALID FOR 30 DAYS, WE RESERVE THE RIGHT TO CHANGE/CANCEL TERMS WITHOUT WRITTEN NOTICE
THANK YOUR FOR THE OPPORTUNITY TO SERVE YOU!

RENTAL QUOTE

Sales Rep: Kevin Koehler
Phone: (602) 509-2231
Email: kevin.koehler@sunstateequip.com

320 S. 19th Avenue, Phoenix AZ 85009
Phone: (602) 253-3311
Fax: (602) 253-3320

Date: **7/16/2025**

Customer: B&F
Contact: Travis Monk
Phone: 602-326-9282
Email: tmonk@bfcontracting.com
Job Address: SR 101 & SR 202
Job/PO #: Chandler Redundant Sewer Junction Structure B

	CATEGORY	DESCRIPTION	EACH DAILY	EACH WEEKLY	EACH MONTHLY
28	Trench Box - Accessories	Handrail	$ 7.00	$ 28.00	$ 84.00
1	Trench Bridges	8'	$ 15.18	$ 60.72	$ 182.16
			DAILY	**WEEKLY**	**MONTHLY**
		SUBTOTAL - ESTIMATED RENTAL	$ 211.18	$ 844.72	$ 2,534.16
		TAX - 8.6%	$ 18.16	$ 72.65	$ 217.94
		TOTAL - ESTIMATED RENTAL	**$ 229.34**	**$ 917.37**	**$ 2,752.10**

After Hours/Wide Load charge of $150.00/per load if applicable/Freight is for Metro Phoenix unless noted.
Customers will be responsible for equipment assembly/disassembly.

Quoted By: **Kevin Koehler**

Date: **7/16/2025**

Customer Signature

Title

QUOTE IS VALID FOR 30 DAYS, WE RESERVE THE RIGHT TO CHANGE/CANCEL TERMS WITHOUT WRITTEN NOTICE
THANK YOUR FOR THE OPPORTUNITY TO SERVE YOU!

Slide Rail Rental Quote

320 S. 19th Avenue, Phoenix AZ 85009
Phone (6002) 253-3311 Fax: (602) 253-3320

Order Date: 7/16/25
Quoted By: Kevin Koehler
Mobile Number: (602) 509-2231
E-mail: kevin@tsraz.com

Customer: B&F
Attention: Travis Monk
Phone: 602-326-9282

Job Name: Chandler Redundant Sewer Junction Structure C
Job Location: SR 101 & SR 202

EQUIPMENT DESCRIPTION	PER WEEK	PER MONTH
SLIDE RAIL SYSTEM-		
20' L x 20' W x 28' D	$ 7,094.00	$ 21,282.00
Rigging Kit (If requested to be left on site after installation)		$ 750.00
ONE MONTH MINIMUM RENTAL ON SHORING		
ENGINEERING: $3,500 (estimated)		
TSR WILL PROVIDE ON SITE PERSONNEL TO INSTRUCT IN THE PROPER		
INSTALLATION & REMOVAL OF SHORING SYSTEM. CONTRACTOR TO PROVIDE		
NECESSARY EQUIPMENT FOR INSTALLTION AND REMOVAL OF THE SHORING		
SYSTEM. TSR WILL PROVIDE ON SITE PERSONNEL FOR (3) DAYS FOR		
INSTALLATION. ANY ADDITIONAL ON SITE INSTRUCTION CAN BE CHARGED		
AT $1000 PER DAY. NOTE: RENTAL BEGINS THE DAY THE EQUIPMENT IS		
DELIVERED UNLESS AGREED UPON BY BOTH PARTIES. SIGNATURE IS		
REQUIRED BEFORE ENGINEERING AND OR DELIVERY OF EQUIPMENT.		
QUOTE IS JUST AND ESTIMATE AND CAN CHANGE BASED ON CONTRACTOR		
SCHEDULE.		
EQUIPMENT WEEKLY/MONTHLY TOTAL	**WEEKLY**	**MONTHLY**
	$7,094.00	**$22,032.00**

Quantity	Service/Item Description	Unit Price	Unit	Total
5	Delivery	$ 800.00	EACH	$4,000.00
5	Pickup	$ 800.00	EACH	$4,000.00
	SERVICE/ITEM TOTAL			**$8,000.00**

CONTRACTOR TO AGREE TO TSR'S RENTAL TERMS AND CONDITIONS PRIOR TO START OF SHORING PROJECT. RENTAL BEGINS UPON DLEIVERY OF SHORING MATERISLS

Kevin Koehler — 7/16/25
Quoted By — Date

Customer Signature — Date

RENTAL QUOTE

320 S. 19th Avenue, Phoenix AZ 85009
Phone: (602) 253-3311
Fax: (602) 253-3320

Sales Rep: Kevin Koehler
Phone: (602) 509-2231
Email: kevin.koehler@sunstateequip.com

Date: **7/16/2025**

Customer: B&F
Contact: Travis Monk
Phone: 602-326-9282
Email: tmonk@bfcontracting.com
Job Address: SR 101 & SR 202
Job/PO #: Chandler Redundant Sewer Junction Structure C

	CATEGORY	DESCRIPTION	EACH DAILY	EACH WEEKLY	EACH MONTHLY
20	Trench Box - Accessories	Handrail	$ 7.00	$ 28.00	$ 84.00
1	Trench Bridges	8'	$ 15.18	$ 60.72	$ 182.16
			DAILY	**WEEKLY**	**MONTHLY**
		SUBTOTAL - ESTIMATED RENTAL	$ 155.18	$ 620.72	$ 1,862.16
		TAX - 8.6%	$ 13.35	$ 53.38	$ 160.15
		TOTAL - ESTIMATED RENTAL	**$ 168.53**	**$ 674.10**	**$ 2,022.31**

After Hours/Wide Load charge of $150.00/per load if applicable/Freight is for Metro Phoenix unless noted.
Customers will be responsible for equipment assembly/disassembly.

Quoted By: **Kevin Koehler**

Date: **7/16/2025**

Customer Signature

Title

QUOTE IS VALID FOR 30 DAYS, WE RESERVE THE RIGHT TO CHANGE/CANCEL TERMS WITHOUT WRITTEN NOTICE
THANK YOUR FOR THE OPPORTUNITY TO SERVE YOU!

Slide Rail Rental Quote

320 S. 19th Avenue, Phoenix AZ 85009
Phone (6002) 253-3311 Fax: (602) 253-3320

Order Date: 7/16/25
Quoted By: Kevin Koehler
Mobile Number: (602) 509-2231
E-mail: kevin@tsraz.com

Customer: B&F
Attention: Travis Monk
Phone: 602-326-9282

Job Name: Chandler Redundant Sewer Junction Structure E
Job Location: SR 101 & SR 202

EQUIPMENT DESCRIPTION	PER WEEK	PER MONTH
SLIDE RAIL SYSTEM-		
20' L x 20' W x 27' D	$ 7,094.00	$ 21,282.00
Rigging Kit (If requested to be left on site after installation)		$ 750.00
ONE MONTH MINIMUM RENTAL ON SHORING		
ENGINEERING: $3,500 (estimated)		
TSR WILL PROVIDE ON SITE PERSONNEL TO INSTRUCT IN THE PROPER		
INSTALLATION & REMOVAL OF SHORING SYSTEM. CONTRACTOR TO PROVIDE		
NECESSARY EQUIPMENT FOR INSTALLTION AND REMOVAL OF THE SHORING		
SYSTEM. TSR WILL PROVIDE ON SITE PERSONNEL FOR (3) DAYS FOR		
INSTALLATION. ANY ADDITIONAL ON SITE INSTRUCTION CAN BE CHARGED		
AT $1000 PER DAY. NOTE: RENTAL BEGINS THE DAY THE EQUIPMENT IS		
DELIVERED UNLESS AGREED UPON BY BOTH PARTIES. SIGNATURE IS		
REQUIRED BEFORE ENGINEERING AND OR DELIVERY OF EQUIPMENT.		
QUOTE IS JUST AND ESTIMATE AND CAN CHANGE BASED ON CONTRACTOR		
SCHEDULE.		
EQUIPMENT WEEKLY/MONTHLY TOTAL	**WEEKLY**	**MONTHLY**
	$7,094.00	**$22,032.00**

Quantity	Service/Item Description	Unit Price	Unit	Total
5	Delivery	$ 800.00	EACH	$4,000.00
5	Pickup	$ 800.00	EACH	$4,000.00
	SERVICE/ITEM TOTAL			**$8,000.00**

CONTRACTOR TO AGREE TO TSR'S RENTAL TERMS AND CONDITIONS PRIOR TO START OF SHORING PROJECT. RENTAL BEGINS UPON DLEIVERY OF SHORING MATERISLS

Kevin Koehler — 7/16/25
Quoted By — Date

Customer Signature — Date

RENTAL QUOTE

Sales Rep: Kevin Koehler
Phone: (602) 509-2231
Email: kevin.koehler@sunstateequip.com

320 S. 19th Avenue, Phoenix AZ 85009
Phone: (602) 253-3311
Fax: (602) 253-3320

Date: **7/16/2025**

Customer: B&F
Contact: Travis Monk
Phone: 602-326-9282
Email: tmonk@bfcontracting.com
Job Address: SR 101 & SR 202
Job/PO #: Chandler Redundant Sewer Junction Structure E

	CATEGORY	DESCRIPTION	EACH DAILY	EACH WEEKLY	EACH MONTHLY
20	Trench Box - Accessories	Handrail	$ 7.00	$ 28.00	$ 84.00
1	Trench Bridges	8'	$ 15.18	$ 60.72	$ 182.16
			DAILY	**WEEKLY**	**MONTHLY**
		SUBTOTAL - ESTIMATED RENTAL	$ 155.18	$ 620.72	$ 1,862.16
		TAX - 8.6%	$ 13.35	$ 53.38	$ 160.15
		TOTAL - ESTIMATED RENTAL	**$ 168.53**	**$ 674.10**	**$ 2,022.31**

After Hours/Wide Load charge of $150.00/per load if applicable/Freight is for Metro Phoenix unless noted.
Customers will be responsible for equipment assembly/disassembly.

Quoted By: **Kevin Koehler**

Date: **7/16/2025**

Customer Signature

Title

QUOTE IS VALID FOR 30 DAYS, WE RESERVE THE RIGHT TO CHANGE/CANCEL TERMS WITHOUT WRITTEN NOTICE
THANK YOUR FOR THE OPPORTUNITY TO SERVE YOU!

RENTAL QUOTE

320 S. 19th Avenue, Phoenix AZ 85009
Phone: (602) 253-3311
Fax: (602) 253-3320

Sales Rep: Kevin Koehler
Phone: (602) 509-2231
Email: kevin.koehler@sunstateequip.com

Date: **7/16/2025**

Customer: B&F
Contact: Travis Monk
Phone: 602-326-9282
Email: tmonk@bfcontracting.com
Job Address: SR 101 & SR 202
Job/PO #: Chandler Redundant Sewer RECEIVER PIT

	CATEGORY	DESCRIPTION	EACH DAILY	EACH WEEKLY	EACH MONTHLY
2	Steel Crossing Plates	8 X 20 END PROTECTION	$ 11.93	$ 83.51	$ 334.04
1	Trench Box - Steel	6' x 16' x 4"	$ 38.30	$ 153.20	$ 459.60
2	Trench Box - Steel	10' x 16' x 4"	$ 61.42	$ 245.68	$ 737.04
1	Trench Box - Steel	6' x 24' x 6"	$ 51.31	$ 205.24	$ 615.72
2	Trench Box - Steel	10' x 24' x 6"	$ 82.37	$ 329.48	$ 988.44
16	Trench Box - Accessories	Corrugated Hanger Plates 9-6', 8-20"	$ 6.95	$ 27.80	$ 83.40
12	Trench Box - Accessories	16' I-Beam Spreader	$ 18.00	$ 72.00	$ 216.00
12	Trench Box - Accessories	20' Pipe Spreader	$ 5.00	$ 20.00	$ 60.00
1	Trench Box - Accessories	Ladder Hanger	$ 2.49	$ 9.96	$ 29.88
4	Trench Box - Accessories	Stacking Pin (Set of 4)	$ 2.01	$ 8.04	$ 24.12
12	Trench Box - Accessories	Handrail	$ 7.00	$ 28.00	$ 84.00
2	Slings - Chain	4 Way Bridle 20' Box	$ 17.38	$ 69.52	$ 208.56
1	Trench Bridges	8'	$ 15.18	$ 60.72	$ 182.16

	DAILY	WEEKLY	MONTHLY
SUBTOTAL - ESTIMATED RENTAL	$ 716.72	$ 2,938.46	$ 8,982.40
TAX - 8.6%	$ 61.64	$ 252.71	$ 772.49
TOTAL - ESTIMATED RENTAL	**$ 778.36**	**$ 3,191.17**	**$ 9,754.89**

QTY	SERVICE ITEMS	COST	UNIT	TOTAL COST
5	Delivery - Phoenix Metropollitan Area	$225.00	Each	$ 1,125.00
5	Pickup - Phoenix Metropolitan Area	$225.00	Each	$ 1,125.00
4	Wide Load Charge Delivery & Pick up	$50.00	Each	$ 200.00
1	Site Specific Enineering (For excavations over 20ft depth if required)	$1,500.00	Each	$ 1,500.00

SUBTOTAL - ESTIMATED TRANSPORTATION/SERVICE ITEMS	$ 3,950.00
TAX 8.6%	$ 210.70
TOTAL - ESTIMATED TRANSPORTATION/SERVICE ITEMS	**$ 4,160.70**

After Hours/Wide Load charge of $150.00/per load if applicable/Freight is for Metro Phoenix unless noted.
Customers will be responsible for equipment assembly/disassembly.

Quoted By: **Kevin Koehler**

Customer Signature

QUOTE IS VALID FOR 30 DAYS, WE RESERVE THE RIGHT TO CHANGE/CANCEL TERMS WITHOUT WRITTEN NOTICE
THANK YOUR FOR THE OPPORTUNITY TO SERVE YOU!

Slide Rail Rental Quote

320 S. 19th Avenue, Phoenix AZ 85009
Phone (6002) 253-3311 Fax: (602) 253-3320

Order Date: 7/16/25
Quoted By: Kevin Koehler
Mobile Number: (602) 509-2231
E-mail: kevin@tsraz.com

Customer: B&F
Attention: Travis Monk
Phone: 602-326-9282

Job Name: Chandler Redundent Sewer Junction Structure B
Job Location: SR 101 & SR 202 San Tan

EQUIPMENT DESCRIPTION	PER WEEK	PER MONTH
SLIDE RAIL SYSTEM-		
47' L x 47' W x 33' D	$ 19,646.00	$ 58,938.00
Rigging Kit (If requested to be left on site after installation)		$ 750.00
ONE MONTH MINIMUM RENTAL ON SHORING		
ENGINEERING: $3,500 (estimated)		
TSR WILL PROVIDE ON SITE PERSONNEL TO INSTRUCT IN THE PROPER		
INSTALLATION & REMOVAL OF SHORING SYSTEM. CONTRACTOR TO PROVIDE		
NECESSARY EQUIPMENT FOR INSTALLTION AND REMOVAL OF THE SHORING		
SYSTEM. TSR WILL PROVIDE ON SITE PERSONNEL FOR (3) DAYS FOR		
INSTALLATION. ANY ADDITIONAL ON SITE INSTRUCTION CAN BE CHARGED		
AT $1000 PER DAY. NOTE: RENTAL BEGINS THE DAY THE EQUIPMENT IS		
DELIVERED UNLESS AGREED UPON BY BOTH PARTIES. SIGNATURE IS		
REQUIRED BEFORE ENGINEERING AND OR DELIVERY OF EQUIPMENT.		
QUOTE IS JUST AND ESTIMATE AND CAN CHANGE BASED ON CONTRACTOR		
SCHEDULE.		
EQUIPMENT WEEKLY/MONTHLY TOTAL	**WEEKLY**	**MONTHLY**
	$19,646.00	**$59,688.00**

Quantity	Service/Item Description	Unit Price	Unit	Total
10	Delivery	$ 800.00	EACH	$8,000.00
10	Pickup	$ 800.00	EACH	$8,000.00
2	47'6" Waster Beam	$ 5,700.00	EACH	$11,400.00
		SERVICE/ITEM TOTAL		**$27,400.00**

CONTRACTOR TO AGREE TO TSR'S RENTAL TERMS AND CONDITIONS PRIOR TO START OF SHORING PROJECT. RENTAL BEGINS UPON DLEIVERY OF SHORING MATERISLS

Kevin Koehler — 7/16/25
Quoted By — Date

Customer Signature — Date

Quote # 2502R

TRENCH-ADE

Date: 7/18/2025
Quoted By: Timothy Plane
Phone: 602-370-7532

Customer: B&F Contracting
Contact: Travis Monk
Phone: 602-326-9282
Email: tmonk@bfcontracting.com

Project Name: COC 66" Redundant CMAR - Junction Structure B

Location: NEC of San Tan 202 & Price Rd, Chandler

Approx Duration: 7 Months
901D

		Per Unit Cost			
Rental Items Description	Qty.		*Daily*	*Weekly*	*Monthly*
Slide Rail System 33'D x 47'L x 47' W	7				55,814.00
Clearspan					
Note: Contractor to supply 2"x4"					
material to complete guard rail fencing					
10' Ped Bridge	7				479.91
Ladder Hanger	7				47.99
Note: Contractor to suppy ladder					
EXTENDED TOTALS			0.00	0.00	394,393.30

Delivery/ Pickup	Qty.	Cost	Ext.
Round Trip Freight (estimated at 7 truck loads each way)	14	2,500.00	35,000.00
Deadman	2	3,600.00	7,200.00
Site Specific Engineering	1	6,300.00	6,300.00
Site Consultation (est. at 4 days install included rigging kit)	1	4,500.00	4,500.00
EXTENDED TOTALS		16,900.00	48,000.00

TOTALS			442,393.30

Fuel surcharge is not included and will be added to all items

Sales tax is not included and will be added to all items

Quote # 2503R

Date: 7/18/2025
Quoted By: Timothy Plane
Phone: 602-370-7532

Customer: B&F Contracting
Contact: Travis Monk
Phone: 602-326-9282
Email: tmonk@bfcontracting.com

Project Name: COC 66" Redundant CMAR - Junction Structure C

Location: NEC of San Tan 202 & Price Rd, Chandler

Approx Duration: 3 Months
901D

		Per Unit Cost			
Rental Items Description	Qty.		*Daily*	*Weekly*	*Monthly*
Slide Rail System 28'D x 20'L x 20'W	3				17,020.00
Clearspan					
10' Ped Bridge	3				479.91
Lagger Hanger	3				47.99
Note: Contractor to supply ladder					
Note: Contractor to supply 2"x4"					
material to complete guard rail fencing					
EXTENDED TOTALS			0.00	0.00	52,643.70

Delivery/ Pickup	Qty.	Cost	Ext.
Round Trip Freight (estimated at 4 truck loads)	8	2,500.00	20,000.00
Deadman	0	3,600.00	0.00
Site Specific Engineering	1	3,500.00	3,500.00
Site Consultation (est. at 3 days install includes rigging kit)	1	3,375.00	3,375.00
EXTENDED TOTALS		12,975.00	26,875.00

TOTALS			79,518.70

Fuel surcharge is not included and will be added to all items

Sales tax is not included and will be added to all items

Quote # 2504R

Date: 7/18/2025
Quoted By: Timothy Plane
Phone: 602-370-7532

Customer: B&F Contracting
Contact: Travis Monk
Phone: 602-326-9282
Email: tmonk@bfcontracting.com

Project Name: COC 66" Redundant CMAR - Bore Pit

Location: NEC of San Tan 202 & Price Rd, Chandler

Approx Duration: 6 Months

901D

		Per Unit Cost			
Rental Items Description	Qty.		*Daily*	*Weekly*	*Monthly*
Slide Rail System 26'D x 40'L x 20' W	6				30,240.00
Clearspan					
Note: Contractor to supply 2"x4"					
material to complete guard rail fencing					
8x20 Steel Plate	36				873.17
Hanging End Panels (26')	60				221.87
10' Ped Bridge	6				479.91
Ladder Hanger	6				47.99
Note: Contractor to supply ladder					
EXTENDED TOTALS			0.00	0.00	229,353.72

Delivery/ Pickup	Qty.	Cost	Ext.
Round Trip Freight (estimated at 5 truck loads each way)	10	2,500.00	25,000.00
Deadman	1	2,100.00	2,100.00
Site Specific Engineering	1	4,250.00	4,250.00
Site Consultation (estimated at 4 days install)	1	4,500.00	4,500.00
EXTENDED TOTALS		13,350.00	35,850.00

TOTALS			265,203.72

Fuel surcharge is not included and will be added to all items

Sales tax is not included and will be added to all items

Quote # 2505R

Date: 7/18/2025
Quoted By: Timothy Plane
Phone: 602-370-7532

Customer: B&F Contracting
Contact: Travis Monk
Phone: 602-326-9282
Email: tmonk@bfcontracting.com

Project Name: COC 66" Redundant CMAR - Receiving Pit

Location: NEC of San Tan 202 & Price Rd, Chandler

Approx Duration: 6 Months
901D

		Per Unit Cost			
Rental Items Description	Qty.		*Daily*	*Weekly*	*Monthly*
Slide Rail System 25'D x 40'L x 16' W	6				25,270.00
Clearspan					
Note: Contractor to supply 2"x4"					
material to complete guard rail fencing					
8x20 Steel Plate	36				873.17
Hanging End Panels (26')	60				221.87
10' Ped Bridge	6				479.91
Ladder Hanger	6				47.99
Note: Contractor to supply ladder					
EXTENDED TOTALS			0.00	0.00	199,533.72

Delivery/ Pickup	Qty.	Cost	Ext.
Round Trip Freight (estimated at 4 truck loads each way)	8	2,500.00	20,000.00
Deadman	1	2,100.00	2,100.00
Site Specific Engineering	1	4,250.00	4,250.00
Site Consultation (estimated at 4 days install)	1	4,500.00	4,500.00
EXTENDED TOTALS		13,350.00	30,850.00

TOTALS			230,383.72

Fuel surcharge is not included and will be added to all items

Sales tax is not included and will be added to all items

Quote # 2512R

Date: 7/18/2025
Quoted By: Timothy Plane
Phone: 602-370-7532

Customer: B&F Contracting
Contact: Travis Monk
Phone: 602-326-9282
Email: tmonk@bfcontracting.com

Project Name: COC 66" Redundant CMAR - Junction Structure E

Location: NEC of San Tan 202 & Price Rd, Chandler

Approx Duration: 3 Months

901D

		Per Unit Cost			
Rental Items Description	Qty.		*Daily*	*Weekly*	*Monthly*
Slide Rail System 27'D x 20'L x 20'W	3				17,020.00
Clearspan					
Note: Contractor to supply 2"x4"					
material to complete guard rail fencing					
10' Ped Bridge	3				479.91
Ladder Hanger	3				47.99
Note: Contractor to supply ladder					
EXTENDED TOTALS			0.00	0.00	52,643.70

Delivery/ Pickup	Qty.	Cost	Ext.
Round Trip Freight (estimated at 4 truck loads each way)	8	2,500.00	20,000.00
Deadman	0	3,600.00	0.00
Site Specific Engineering	1	3,500.00	3,500.00
Site Consultation (est. at 4 days install including rigging kit)	1	3,375.00	3,375.00
EXTENDED TOTALS		12,975.00	26,875.00

TOTALS			79,518.70

Fuel surcharge is not included and will be added to all items

Sales tax is not included and will be added to all items

PLASTIFAB STOP LOGS

Fiber Glass Systems | NOV

Fiber Glass Systems, L.P.
5985 South 6th Way
Ridgefield, WA 98642
Phone: (360) 887-3580
Fax: (360) 887-3577
Web: www.Plasti-Fab.com

Quote

Account Manager:
Mike A Garcia
Regional Sales Manager - West
564-237-0342
Mike.Garcia@nov.com

Prepared by:
Damon Quint

B&F Contracting — Date: 07/17/2025
Attn: Travis Monk
Project: City of Chandler Junction Structures B &C – AZ
Quotation Number: 250123101 Rev2

Qty	Description	Price	Total
	Junction Structure B Pipe Size: 66" ID Structural Opening: 74" ID **Plasti-Fab Stop Log / Filler Log Assembly 66" x 84"** (3) Guide Frames (3) Sets of Logs Includes:		$270,034.00
3	T-316 stainless steel surface mount guide frame 5'-6" wide x 23'-0" high w/ embedded bottom channel and T-316 anchor bolts.		
9	Composite FRP infusion molded stop log 5'-6" wide x 2'-0" high x 3.5" thick with T-316 lifting pins, EPDM base seals and vertical seals mounted on the face. (Approximately 301 lbs per log)		
3	Composite FRP infusion molded stop log 5'-6" wide x 1'-0" high x 3.5" thick with T-316 lifting pins, EPDM base seals and vertical seals mounted on the face. (Approximately 161 lbs per log)		
3	Composite FRP infusion molded filler log 5'-6" wide x 6'-0" high x 3.5" thick with flow through opening and T-316 lifting pins. (Approximately 350 lbs per log)		
1	T-316 stainless steel lifting beam for above logs		
3	T-316 stainless steel storage rack wall mounted 66" x 84"		

	Junction Structure C Pipe Size: 66" ID Structural Opening: 74" ID **Plasti-Fab Stop Log / Filler Log Assembly 66" x 84"** (2) Guide Frames (2) Sets of Logs Includes:		$186,689.00
2	T-316 stainless steel surface mount guide frame 5'-6" wide x 19'-0" high w/ embedded bottom channel and T-316 anchor bolts.		
6	Composite FRP infusion molded stop log 5'-6" wide x 2'-0" high x 3.5" thick with T-316 lifting pins, EPDM base seals and vertical seals mounted on the face. (Approximately 301 lbs per log)		
2	Composite FRP infusion molded stop log 5'-6" wide x 1'-0" high x 3.5" thick with T-316 lifting pins, EPDM base seals and vertical seals mounted on the face. (Approximately 161 lbs per log)		
2	Composite FRP infusion molded filler log 5'-6" wide x 6'-0" high x 3.5" thick with flow through opening and T-316 lifting pins. (Approximately 350 lbs per log)		
1	T-316 stainless steel lifting beam for above logs		
2	T-316 stainless steel storage rack wall mounted 66" x 84"		
	Clarifications: 1) Davit crane, hoist cable/rope, lifting bridle, eye hook and access hatch by others. 2) We are quoting guide frame and storage rack material as T-316 stainless steel in lieu of specified FRP. 3) Fiber Glass Systems provides a 1-year warranty against failure due to any defects in material and workmanship. 4) All testing and field start-up by others.		
		Subtotal	**$456,723.00**
		Estimated Freight + 15% - EXW Seller's Premises Incoterms 2020	$15,525.00

Terms: Unless otherwise specified, Fiber Glass Systems standard terms are NET 30, contingent upon credit approval.

Exclusions:

- Installation, grouting and concrete.
- Fasteners, anchor hardware and adhesive not expressly stated above.
- Appurtenances, fittings, supports, and materials not expressly stated above.
- Controls and operators not expressly stated above.
- Spare parts not expressly stated above.
- NSF-61 compliant components not expressly stated above.
- Site visitation for any reason, including start-up and validation.
- Shop testing and field testing.

O&M Manuals: When requested,1 electronic copy only will be provided. Hard copies not included.

CHANDLER arizona

101/202 REDUNDANT 66-INCH SEWER LINE PROJECT NO. WW2402.401

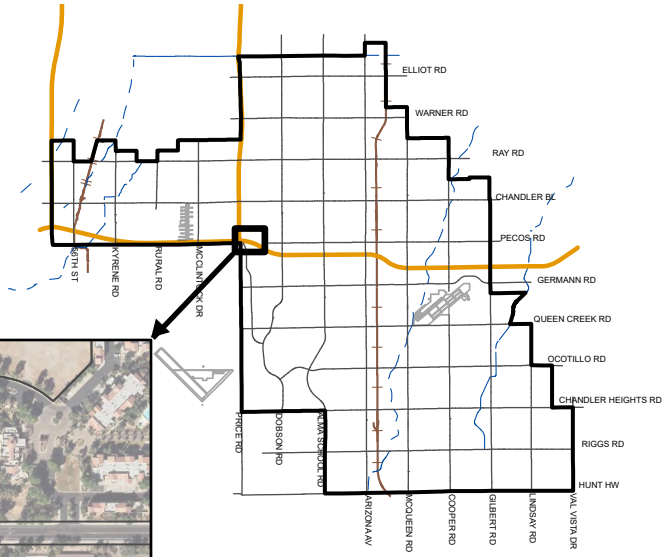

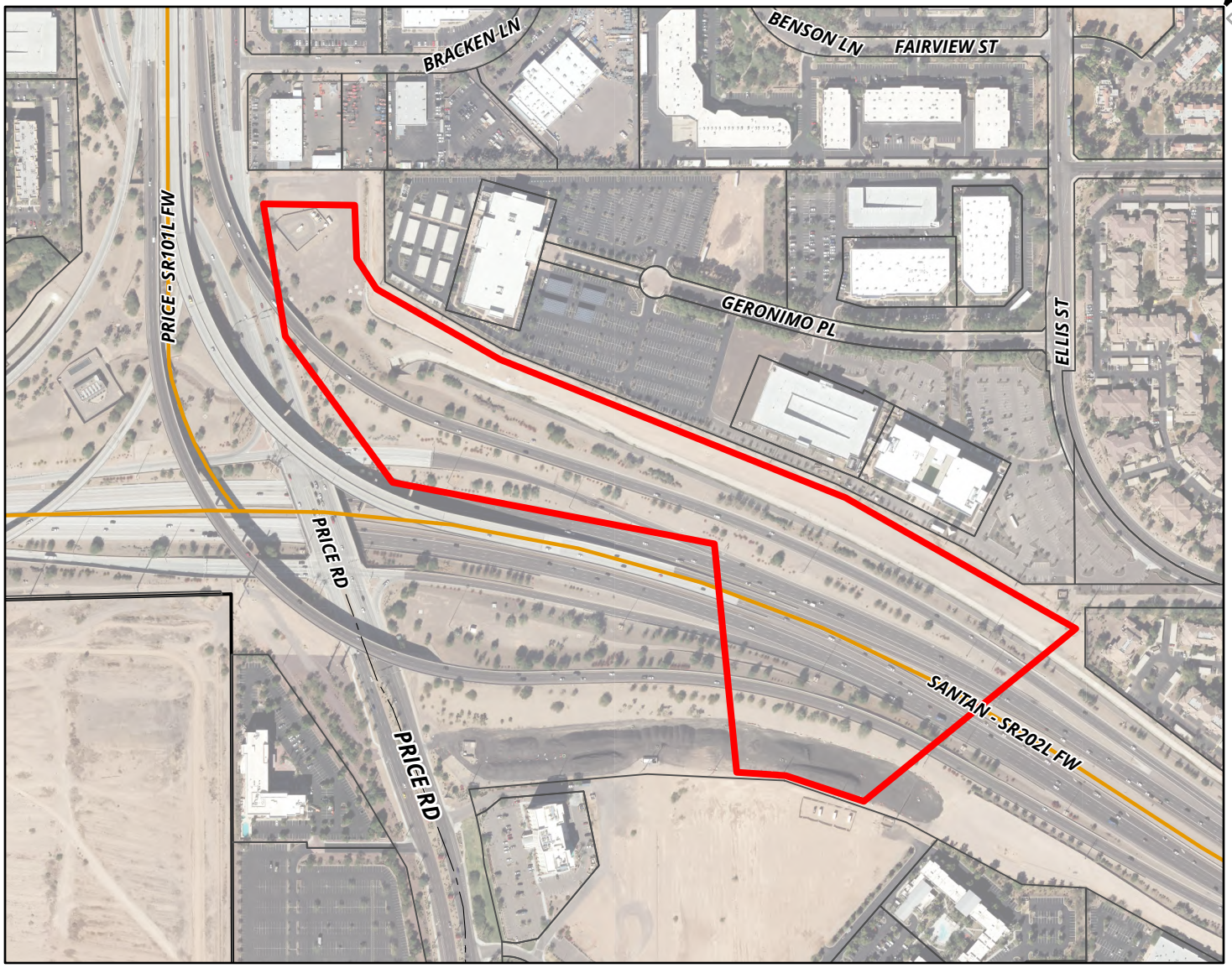

MEMO NO. CP26-021

PROJECT LOCATION

NTS

ChanGIS

F:\ENGINEER\GENSERV_ArcGISPro_Shared\Map Requests\Capital Projects\2025\CP25-059\CP25-059\CP25-059.aprx 8/8/2025 CameronK

City Council Memorandum Public Works & Utilities Memo No. UA26-012

Date: September 15, 2025
To: Mayor and Council
Thru: John M. Pombier, Acting City Manager
Dawn Lang, Deputy City Manager/CFO
Jeremy Abbott, Acting Public Works and Utilities Director
From: Christian Jonson, Procurement Officer
Subject: Sole Source Purchase of Analytical Equipment, Parts, and Services

---

Proposed Motion:

Move City Council approve the sole source purchase of analytical equipment, parts, and services, from Emerson LLP, in an amount not to exceed $325,000.

Background/Discussion:

The Public Works & Utilities Department utilizes Rosemount pH oxidation reduction potential, conductivity, and chlorine analyzers to measure water quality at multiple facilities. These analyzers are important to facility operations and must be maintained on a regular basis. The maintenance of these analyzers includes changing probes and transmitters on a schedule set by the manufacturer. These facilities have standardized to Rosemount analyzers to reduce the number of spare parts on-hand to a minimum and maintain staff's proficiency of the equipment.

Evaluation:

Emerson LLP, formerly Rosemount Analytical, Inc., is the sole supplier of Rosemount analytical equipment, parts, and services. Staff recommends the purchase of Rosemount analytical equipment, parts, and services as a sole source.

Financial Implications:

The city will receive a 10% discount off list price, with $325,000 total purchase amount covering multiple water quality measurement needs across facilities. Costs associated with the Ocotillo Brine Reduction Facility, in the amount of $100,000, will be reimbursed by Intel Corporation.

Fiscal Impact

Account No.	Fund Name	Program Name	Dollar Amount	CIP Funded Y/N
616.3930.5316.0.0.0	Wastewater Industrial Treatment	N/A	$100,000	N
615.3960.5316.4IAC.0.0	Wastewater Operating	N/A	$60,000	N
612.3960.5316.4IAC.0.0	Reclaimed Water Operating	N/A	$20,000	N
612.3980.5316.4IAC.0.0	Reclaimed Water Operating	N/A	$40,000	N
605.3860.5316.4IAC.0.0	Water Operating	N/A	$75,000	N
615.3970.5316.4IAC.0.0	Wastewater Operating	N/A	$30,000	N

City Council Memorandum Public Works & Utilities Memo No. UA26-013

Date: September 15, 2025
To: Mayor and Council
Thru: John M. Pombier, Acting City Manager
Dawn Lang, Deputy City Manager/CFO
Jeremy Abbott, Acting Public Works and Utilities Director
From: Tabitha Sauer, Solid Waste Manager
Subject: Agreement No. 4831, Amendment No. 1, with Tetra Tech, Inc., Paseo Vista Recreation Area and Landfill Environmental Consulting Services

---

Proposed Motion:

Move City Council approve Agreement No. 4831, Amendment No. 1, with Tetra Tech, Inc., Paseo Vista Recreation Area and landfill environmental consulting services, in an amount not to exceed $200,000, for a one-year period, October 1, 2025, through September 30, 2026.

Background/Discussion:

The Paseo Vista Recreation Area, located at 3850 South McQueen Road, is a 64-acre former landfill site. In 2005, the landfill was closed, and the site was redeveloped into a recreation area in 2009. The Post Closure Plan and regulatory permits approved by the Arizona Department of Environmental Quality (ADEQ) include requirements for regular environmental monitoring.

Under this agreement, Tetra Tech, Inc., will continue to provide assistance with environmental monitoring, including data analysis and generating reports for submission. Tetra Tech, Inc. will also assist with maintenance and installation services of the landfill's systems upon request. The project scope of work consists of research, geotechnical investigation and monitoring, recertification, sampling and soil testing, and regulatory assistance.

Evaluation:

On October 14, 2024, City Council approved Agreement No. 4831, with Tetra Tech, Inc., for the Paseo Vista Recreation Area and landfill environmental consulting services, for a one-year period, with the option of up to four one-year extensions. The consultant has agreed to extend the agreement under the same terms and conditions, and staff recommends the extension of this agreement.

Fiscal Impact

Account No.	Fund Name	Program Name	Dollar Amount	CIP Funded Y/N
625.3700.5219.4LFL.0.0	Solid Waste Operating	N/A	$200,000	N

Attachments

Amendment No. 1

City Clerk Document No. _____

City Council Meeting Date: September 18, 2025

AMENDMENT TO CITY OF CHANDLER AGREEMENT
PASEO VISTA RECREATION AREA AND LANDFILL ENVIRONMENTAL CONSULTING SERVICES
CITY OF CHANDLER AGREEMENT NO. 4831

THIS AMENDMENT NO. 1 (Amendment No. 1) is made and entered into by and between the City of Chandler, an Arizona municipal corporation (City), and Tetra Tech, Inc. (Contractor), (City and Contractor may individually be referred to as Party and collectively referred to as Parties) and made _____ , 2025 (Effective Date).

RECITALS

WHEREAS, the Parties entered into an agreement for Paseo Vista Recreation Area and Landfill environmental consulting services (Agreement); and

WHEREAS, the term of the Agreement was October 1, 2024, through September 30, 2025, with the option of up to four one-year extensions; and

WHEREAS, the Parties wish to exercise the first option through this Amendment to extend the Agreement for one year.

AGREEMENT

NOW THEREFORE, the Parties agree as follows:

1. The recitals are accurate and are incorporated and made a part of the Agreement by this reference.

2. Section III is amended to read as follows: The Agreement is extended for a one-year period October 1, 2025, through September 30, 2026.

3. Section IV is amended to read as follows: The City will pay the Contractor the per unit cost set forth in Revised Exhibit B of the original Agreement, attached to and made a part of this Amendment No. 1 by this reference. Total payments made to the Contractor during the term of this Amendment No. 1 will not exceed $200,000.

4. All other terms and conditions of the Agreement remain unchanged and in full force and effect. If a conflict or ambiguity arises between this Amendment No. 1 and the Agreement, the terms and conditions in this Amendment No. 1 prevail and control.

IN WITNESS WHEREOF, the Parties have entered into this Amendment on the Effective Date.

FOR THE CITY

By: _____

Its: Mayor

APPROVED AS TO FORM:

By: _____
City Attorney JMB

ATTEST:

By: _____
City Clerk

FOR THE CONTRACTOR

By: Jeffery M Williams

Its: Vice President, Tetra Tech BAS, Inc.

REVISED EXHIBIT B
COMPENSATION AND FEES

TETRA TECH

SOLID WASTE WEST

SCHEDULE OF CHARGES

PERSONNEL	RATE
Administrative Assistant	$102
Project Clerk	$91
Project Data Analyst	$84
Office Services Clerk	$102
Project Coordinator	$153
Senior Project Coordinator	$175
CAD Tech I	$95
CAD Tech II	$111
CAD Tech III	$131
CAD Tech IV	$151
Designer I	$169
Designer II	$184
Designer III	$203
Designer IV	$221
Staff Engineer I	$128
Staff Engineer II	$139
Staff Engineer III	$151
Project Engineer I	$161
Project Engineer II	$173
Project Engineer III	$184
Senior Engineer I	$194
Senior Engineer II	$205
Senior Engineer III	$217
Supervising Engineer I	$228
Supervising Engineer II	$238
Supervising Engineer III	$250
Division Engineer I	$271
Division Engineer II	$283
Principal Engineer	$309
Principal	$332
Senior Principal	$349
Project Manager	$182
Project Manager I	$193
Project Manager II	$221
Project Manager III	$233
Project Manager IV	$244
Project Manager V	$256
Senior Project Manager	$266
Program Director	$316
Project Advisor*	$275-$375
Construction Supervisor I	$184
Construction Supervisor II	$194
Construction Supervisor III	$205
Construction Manager I	$217
Construction Manager II	$233
Senior Construction Manager	$271
Principal Construction Manager	$298
Chief of Survey Parties	$203
1-Man Survey Party with GPS	$245
2-Man Survey Party	$363

PERSONNEL	RATE
Staff Env. Specialist/Scientist I	$115
Staff Env. Specialist/Scientist II	$127
Project Env. Specialist/Scientist I	$139
Project Env. Specialist/Scientist II	$159
Project Env. Specialist/Scientist III	$174
Senior Env. Specialist/Scientist I	$184
Senior Env. Specialist/Scientist II	$193
Senior Env. Specialist/Scientist III	$205
Field Data Collector	$70
Staff Planner/Permitter I	$77
Staff Planner/Permitter II	$95
Staff Planner/Permitter III	$102
Project Planner/Permitter I	$119
Project Planner/Permitter II	$131
Project Planner/Permitter III	$144
Project Planner/Permitter IV	$154
Senior Planner/Permitter I	$166
Senior Planner/Permitter II	$181
Senior Planner/Permitter III	$193
Senior Planner/Permitter IV	$213
Senior Planner/Permitter V	$232
Principal Planner/Permitter	$294
Architect I	$139
Architect II	$166
Architect III	$194
Architect IV	$222
Staff Geologist I	$130
Staff Geologist II	$140
Staff Geologist III	$150
Project Geologist I	$160
Project Geologist II	$174
Project Geologist III	$184
Senior Geologist I	$194
Senior Geologist II	$205
Senior Geologist III	$217
Supervising Geologist I	$228
Supervising Geologist II	$238
Supervising Geologist III	$250
Principal Geotechnical Eng/Geologist	$269
Principal Geotechnical Eng	$298
Soils/Asphalt/Field Technician	$122
Soils/Asphalt/Field Technician - Prevailing Wage	$149
Technician	$62
Technician I	$93
Technician II	$109
Senior Technician I	$121
Senior Technician II	$144
Senior Technician III	$157
Chief Technician	$177
Senior Operator	$179

*Rates are Effective January 1, 2025 - December 31, 2025. Court Appearance (Expert Witness, Deposition) and Overtime Premium is 150% of Personnel Hourly Rate. *Rate for Project Advisor to be based on specialized staff required.*

IN-HOUSE EXPENSES

3% of Total Personnel Fees	
Personal Vehicle	$0.65/mile
Company Vehicle	$0.75/mile

OTHER EXPENSES

Company and Survey Vehicles	$17/hour
Other Out-of-Pocket Expenses/Supplies/Travel	Cost + 15%
Consultants/Outside/Construction Services	Cost + 15%
Per Diem for Living Expenses	Federal +15%
Equipment Usage	See Attached Schedule

Outside services performed by others and direct expenses incurred on the Client's behalf are charged an administrative fee of fifteen (15%) to cover the cost to provide for administration, sub-consultant contract coordination and insurance. Fee to be added to the direct cost of all consultants, vendors, materials, equipment suppliers, other direct costs, and any other outside services.

TETRA TECH

SOLID WASTE WEST

EQUIPMENT RENTAL RATES

Rates are Effective January 1, 2025 - December 31, 2025

TYPE OF EQUIPMENT	DAY	WEEK	MONTH
4 Gas Range Meter CH4, H2S, CO, O2 (Sentinel 44)	$75	$225	$575
Alpha - 1 Personal Sampling Pump	$75	$200	$500
Disposable Bailer	$20/each	n/a	n/a
CO2 Calorimetric Analysis Tubes	$40	$125	$250
Downhole Camera	$75/hr	n/a	n/a
Dupont Dosimeter Mark-3 (Personal Sample Pump)	$50	$150	$300
Flow Calibrator (Gilian)	$50	$150	$300
Gas Extraction Monitor (GEM 500 / 2000 / 2000 Plus)	$145	$445	$1,330
Lung Sampler (Nutech 218)	$100	$300	$800
Mini-Ram Data Logger	$40	$125	$250
Mini-Ram Dust Meter	$50	$150	$300
Organic Vapor Analyzer (OVA128)	$125	$400	$1,000
Photo Ionization Detector (OVM580B)	$125	$400	$1,000
Sample Train (Gas Extraction Pump)	$50	$150	$300
Soil Auger/Sampler	$30	$90	$180
Sounder (Liquid Level Indicator)	$40	$125	$250
Horiba Meter	$50	$200	$400
MiniRae 2000	$75	$200	$500
GT Surveyor	$75	$200	$500
GPS Enabled SEM Leak Detection Equipment	$250	$800	$2,400
GPS Survey Equipment Services	n/a	$200	n/a
Groundwater Sampling Equipment	$30/hour	n/a	n/a
Company Vehicle	$130	$550	$1,750
Field Sampling Supplies:	100/day	n/a	n/a
LEVEL C (Per Person) Respirator with Cartridge (full or half faced), Tyvek Coveralls, Outer Gloves, Glove Liners, Neoprene Boots	$150	n/a	n/a
Sand Cone or Nuclear Density Gauge	$14/hour	n/a	n/a
Hand auger and soil sampling equipment	$70	n/a	n/a
BAT Permeameter	$250	n/a	n/a
Double Ring Infiltrometer	$250	n/a	n/a
Inclinometer data collection system	$400	n/a	n/a
Infiltration test flowmeter	$130 per day-test		
Floor level manomenter	$80	n/a	n/a
Moisture vapor emission test kit (material only)	$40/kit	n/a	n/a
Field inspection kit (camera, recorder, GPS)	$35	n/a	n/a

City Council Memorandum **Public Works & Utilities** **Memo No.** RE26-022

Date: September 15, 2025
To: Mayor and Council
Thru: John M. Pombier, Acting City Manager
Dawn Lang, Deputy City Manager/CFO
Jeremy Abbott, Acting Public Works and Utilities Director
Daniel Haskins, Capital Projects Division Manager
From: Stephen Shea, Real Estate Program Coordinator
Subject: Introduction of Ordinance No. 5135 Granting a Non-Exclusive Power Distribution Easement to Salt River Project Agricultural Improvement and Power District (SRP), at No Cost, for Electrical Facilities Relocation Required as Part of the Lindsay Road Improvement Project from Ocotillo Road to Hunt Highway

---

Proposed Motion:

Move City Council introduce and tentatively adopt Ordinance No. 5135 granting a non-exclusive power distribution easement to SRP, at no cost, for electrical facilities relocation required as part of the Lindsay Road Improvement Project from Ocotillo Road to Hunt Highway.

Background:

The city will be improving Lindsay Road between Ocotillo Road and Hunt Highway (the “Project”). In order to accommodate the construction of the Project, SRP’s electrical facilities along the county road frontages on the east side of Lindsay Road must be relocated and converted to underground facilities. SRP requires a new power distribution easement (the “Easement”) to cover their relocated facilities. This easement will be granted, at no cost, to SRP.

Staff has reviewed and approved the easement document and legal description.

Financial Implications:

No financial impact to the city.

Attachments

Ordinance No. 5135
Exhibit A
Location Map

ORDINANCE NO. 5135

AN ORDINANCE OF THE CITY COUNCIL OF THE CITY OF CHANDLER, ARIZONA, GRANTING A NON-EXCLUSIVE POWER DISTRIBUTION EASEMENT TO SALT RIVER PROJECT AGRICULTURAL IMPROVEMENT AND POWER DISTRICT, AT NO COST, FOR ELECTRICAL FACILITIES RELOCATION REQUIRED AS PART OF THE LINDSAY ROAD IMPROVEMENT PROJECT FROM OCOTILLO ROAD TO HUNT HIGHWAY.

WHEREAS, the City of Chandler will be improving Lindsay Road from Ocotillo Road to Hunt Highway (the "Project"); and

WHEREAS, in order to accommodate the construction of the Project, Salt River Project Agricultural Improvement and Power District's (SRP) electrical facilities along the county road frontages on the east side of Lindsay Road must be relocated and converted to underground facilities; and

WHEREAS, the City of Chandler is willing to grant a non-exclusive Power Distribution Easement (the "Easement") to SRP, at no cost, for the relocated facilities; and

WHEREAS, the City of Chandler is still in the process of acquiring all of the necessary property to be conveyed to SRP, therefore the City may execute more than one Easement instrument while acquisitions are finalized on the remaining parcels.

NOW, THEREFORE, BE IT ORDAINED by the City Council of the City of Chandler, Arizona, as follows:

Section 1. That the City Council of the City of Chandler, Arizona, authorizes and approves the granting of the Easement to SRP, at no cost, in, upon, over, under, across, through, and along that certain property legally described and depicted in the Easement instrument.

Section 2. That the granting of the Easement(s) shall be in substantially the form approved by the City Attorney attached hereto as Exhibit "A".

Section 3. That the Mayor of the City of Chandler, Arizona, is hereby authorized to execute the Easement and this Ordinance on behalf of the City.

Section 4. That the City Clerk shall cause the original or a certified copy of this Ordinance to be recorded in the Office of Maricopa County Recorder after the effective date of this Ordinance.

INTRODUCED AND TENTATIVELY APPROVED by the City Council of the City of Chandler, Arizona, this _____ day of _____ 2025.

ATTEST:

_____ _____
CITY CLERK MAYOR

PASSED AND ADOPTED by the Mayor and City Council of the City of Chandler, Arizona, this _____ day of _____, 2025.

ATTEST:

_____ _____
CITY CLERK MAYOR

CERTIFICATION

I HEREBY CERTIFY that the above and foregoing Ordinance No. 5135 was duly passed and adopted by the City Council of the City of Chandler, Arizona, at a regular meeting held on the _____ day of _____, 2025, and that the vote was _____ ayes, and _____ nays.

_____
CITY CLERK

APPROVED AS TO FORM

_____
CITY ATTORNEY
DMG

Published in the Arizona Republic on:

EXHIBIT “A”
SRP Easement

WHEN RECORDED MAIL TO:

SALT RIVER PROJECT
Land Department/PAB10W
P. O. Box 52025
Phoenix, Arizona 85072-2025

POWER DISTRIBUTION EASEMENT

Maricopa County
Parcel # SW 1/4 Section 29
SW ¼, SEC. 29, T02S, R06E

Agt. CLB
Job # LJ88884 / T3445714
W *clB* C ASM
R/W #

CITY OF CHANDLER,
an Arizona municipal corporation,

hereinafter called Grantor, for and in consideration of the sum of Ten Dollars, and other valuable consideration, receipt and sufficiency of which is hereby acknowledged, does hereby grant and convey to **SALT RIVER PROJECT AGRICULTURAL IMPROVEMENT AND POWER DISTRICT**, an agricultural improvement district organized and existing under the laws of the State of Arizona, and its successors and assigns, hereinafter called Grantee, for use by Grantee and Grantee's employees, contractors, licensees, and invitees, a non-exclusive easement to construct, install, reconstruct, replace, remove, repair, operate and maintain underground electrical conduits and conductors, pipes, cables, switching equipment, transformers, pad-mounted equipment, enclosures, manholes, vaults, and all other appliances, appurtenances and fixtures (collectively, "Facilities") for the transmission and distribution of electricity, communication signals and data, and for all other purposes connected therewith at such locations and elevations, in, upon, over, under, across, through and along the Easement Parcel (defined below), as Grantee may now or hereafter deem convenient or necessary from time to time, together with the right of access to and from the Easement Parcel, over, across, through and along Grantor's Property (defined below) (collectively, the "Easement").

The lands in, upon, over, under, across, through and along which the Easement is granted are situated in the County of Maricopa, State of Arizona, and are more particularly described as:

Grantor's Property:

A portion of the Southwest quarter, Section 29, Township 2 South, Range 6 East, of the Gila and Salt River Base and Meridian, Maricopa County, Arizona.

Easement Parcel:

SEE EXHIBIT "A" ATTACHED HERETO AND MADE A PART HEREOF

CAUTION: Facilities placed within the Easement Parcel may contain high voltage electrical equipment. Notice is hereby given that the location of underground electrical conductors or facilities must be verified as required by Arizona Revised Statutes, Section 40-360.21, et seq., Arizona Blue Stake Law, prior to any excavation.

Grantor shall maintain a clear area that extends 3.00 feet from and around all edges of all transformer pads and other equipment pads, and a clear operational area that extends 12.00 feet immediately in front of all transformer and other equipment openings. No obstruction, trees, shrubs, fixtures, or permanent structures shall be placed within said areas.

Grantor shall not construct, install, or place, or permit to be constructed, installed or placed any building or other structure, plant any trees, drill any well, store materials of any kind, or alter ground level by cut or fill, within the area of the Easement Parcel.

Grantee shall have the right (but not the obligation) to trim, cut and clear away trees, brush or other vegetation on, the Easement Parcel whenever in its judgment the same shall be necessary for the convenient and safe exercise of the rights herein granted.

In the event Grantee records a document to formally abandon the easement granted herein, all Grantee's rights hereunder shall cease, except the right to remove any and all property placed upon the Easement Parcel within a reasonable time subsequent to such abandonment.

Notwithstanding anything in this instrument, or laws, statutes, ordinances, rules, or regulations to the contrary, if Grantor requires Grantee to relocate or modify the Facilities, Grantor will (i) pay and/or reimburse Grantee any and all costs incurred for such relocation or modification and (ii) provide a reasonable new location for the Facilities, and easement rights therefor, that meets the standards set forth in this instrument. Grantor acknowledges that the Facilities are being located within public right-of-way at the request of Grantor, and that Grantee materially relied on the provisions of this paragraph in agreeing to Grantor's request.

The covenants and agreements herein set forth shall extend and inure in favor and to the benefit of and shall be binding on the heirs, administrators, executors, personal representatives, legal representatives, successors (including successors in ownership and estate), assigns and lessees of the Grantor and Grantee.

THE REMAINDER OF THIS PAGE LEFT INTENTIONALLY BLANK

IN WITNESS WHEREOF, **THE CITY OF CHANDLER,** an Arizona municipal corporation, has caused its name to be executed by its duly authorized representative(s) this _____ day of _____, 20___.

THE CITY OF CHANDLER,

an Arizona municipal corporation

By: _____

Its: _____

APPROVED AS TO FORM:

Dawn M Gingerich for

_____

City Attorney for the

City of Chandler

STATE OF _____)

) ss.

COUNTY OF _____)

On this _____ day of _____, 20_____, before me, the undersigned, personally appeared _____, as _____, of **THE CITY OF CHANDLER**, an Arizona municipal corporation, and such authorized representative acknowledged that this document was executed on behalf of the corporation for the purposes therein contained.

_____

Notary Public

My Commission Expires:

_____

_____

Notary Stamp/Seal

Note: This instrument is exempt from the real estate transfer fee and affidavit of legal value required under A.R.S. Sections 11-1131 and 11-1132 pursuant to the exemptions set forth in A.R.S. Sections 11-1134(A)(2) and (A)(3).

EXHIBIT "A"

SRP JOB NUMBER: T3445714
SRP JOB NAME: CUS UE CH BA LINDSAY RD UG CONV
TTRRSS: 02S06E29

DATE: 08-12-2025

FOUR EASEMENTS LOCATED IN THE SOUTHWEST QUARTER OF SECTION 29, TOWNSHIP 2 SOUTH, RANGE 6 EAST, OF THE GILA AND SALT RIVER MERIDIAN, MARICOPA COUNTY, ARIZONA, BEING MORE PARTICULARLY DESCRIBED AS FOLLOWS:

EASEMENT NO. 1:

COMMENCING AT THE SOUTHWEST CORNER OF SAID SECTION 29, BEING A REBAR, FROM WHICH THE WEST QUARTER CORNER OF SAID SECTION 29, BEING A BRASS CAP IN HAND HOLE, BEARS NORTH 00 DEGREES 26 MINUTES 17 SECONDS WEST, A DISTANCE OF 2645.37 FEET (**BASIS OF BEARINGS**);

THENCE ALONG THE WEST LINE OF THE SOUTHWEST QUARTER OF SAID SECTION 29, NORTH 00 DEGREES 26 MINUTES 17 SECONDS WEST, A DISTANCE OF 66.22 FEET;

THENCE NORTH 89 DGREES 33 MINUTES 43 SECONDS EAST, A DISTANCE OF 61.16 FEET TO THE **POINT OF BEGINNING OF EASEMENT NO. 1**;

THENCE NORTH 45 DEGREES 26 MINUTES 26 SECONDS WEST, A DISTANCE OF 31.34 FEET;

THENCE NORTH 00 DEGREES 26 MINUTES 17 SECONDS WEST, A DISTANCE OF 67.36 FEET TO A POWER DISTRIBUTION EASEMENT PER DOCUMENT 2009-0226631 MARICOPA COUNTY RECORDER (MCR);

THENCE ALONG SAID EASEMENT, NORTH 89 DEGREES 31 MINUTES 49 SECONDS EAST, A DISTANCE OF 8.00 FEET;

THENCE CONTINUING ALONG SAID EASEMENT, SOUTH 00 DEGREES 26 MINUTES 17 SECONDS EAST, A DISTANCE OF 64.05 FEET;

THENCE CONTINUING ALONG SAID EASEMENT, SOUTH 45 DEGREES 26 MINUTES 26 SECONDS EAST, A DISTANCE OF 28.03 FEET;

THENCE SOUTH 44 DEGREES 33 MINUTES 34 SECONDS WEST, A DISTANCE OF 8.00 FEET TO SAID **POINT OF BEGINNING OF EASEMENT NO. 1**.

SAID **EASEMENT NO. 1** CONTAINS AN AREA OF 763.10 SQUARE FEET, MORE OR LESS.

EASEMENT NO. 2:

COMMENCING AT THE SOUTHWEST CORNER OF SAID SECTION 29, BEING A REBAR, FROM WHICH THE WEST QUARTER CORNER OF SAID SECTION 29, BEING A BRASS CAP IN HAND HOLE, BEARS NORTH 00 DEGREES 26 MINUTES 17 SECONDS WEST, A DISTANCE OF 2645.37 FEET (**BASIS OF BEARINGS**);

THENCE ALONG THE WEST LINE OF THE SOUTHWEST QUARTER OF SAID SECTION 29, NORTH 00 DEGREES 26 MINUTES 17 SECONDS WEST, A DISTANCE OF 163.74 FEET;

THENCE NORTH 89 DGREES 33 MINUTES 43 SECONDS EAST, A DISTANCE OF 39.00 FEET TO THE **POINT OF BEGINNING OF EASEMENT NO. 2**;

THENCE NORTH 00 DEGREES 26 MINUTES 17 SECONDS WEST, A DISTANCE OF 52.82 FEET TO A POWER DISTRIBUTION EASEMENT PER DOCUMENT 2009-0226631 MCR;

THENCE ALONG SAID EASEMENT, NORTH 89 DEGREES 33 MINUTES 43 SECONDS EAST, A DISTANCE OF 8.00 FEET;

THENCE CONTINUING ALONG SAID EASEMENT, SOUTH 00 DEGREES 26 MINUTES 17 SECONDS EAST, A DISTANCE OF 52.82 FEET;

THENCE CONTINUING ALONG SAID EASEMENT, SOUTH 89 DEGREES 31 MINUTES 49 SECONDS WEST, A DISTANCE OF 8.00 FEET TO SAID **POINT OF BEGINNING OF EASEMENT NO. 2.**

SAID **EASEMENT NO. 2** CONTAINS AN AREA OF 422.60 SQUARE FEET, MORE OR LESS.

EASEMENT NO. 3:

COMMENCING AT THE SOUTHWEST CORNER OF SAID SECTION 29, BEING A REBAR, FROM WHICH THE WEST QUARTER CORNER OF SAID SECTION 29, BEING A BRASS CAP IN HAND HOLE, BEARS NORTH 00 DEGREES 26 MINUTES 17 SECONDS WEST, A DISTANCE OF 2645.37 FEET (**BASIS OF BEARINGS**);

THENCE ALONG THE WEST LINE OF THE SOUTHWEST QUARTER OF SAID SECTION 29, NORTH 00 DEGREES 26 MINUTES 17 SECONDS WEST, A DISTANCE OF 224.56 FEET;

THENCE NORTH 89 DGREES 33 MINUTES 43 SECONDS EAST, A DISTANCE OF 45.00 FEET TO THE **POINT OF BEGINNING OF EASEMENT NO. 3**;

THENCE NORTH 00 DEGREES 26 MINUTES 17 SECONDS WEST, A DISTANCE OF 412.25 FEET;

THENCE SOUTH 89 DEGREES 33 MINUTES 43 SECONDS WEST, A DISTANCE OF 15.36 FEET;

THENCE NORTH 00 DEGREES 26 MINUTES 17 SECONDS WEST, A DISTANCE OF 8.00 FEET;

THENCE NORTH 89 DEGREES 33 MINUTES 43 SECONDS EAST, A DISTANCE OF 15.36 FEET;

THENCE NORTH 00 DEGRES 26 MINUTES 17 SECONDS WEST, A DISTANCE OF 22.42 FEET;

THENCE NORTH 89 DEGREES 33 MINUTES 43 SECONDS EAST, A DISTANCE OF 8.00 FEET;

THENCE SOUTH 00 DEGREES 26 MINUTES 17 SECONDS EAST, A DISTANCE OF 36.40 FEET;

THENCE NORTH 89 DEGREES 33 MINUTES 43 SECONDS EAST, A DISTANCE OF 2.00 FEET;

THENCE SOUTH 00 DEGREES 26 MINUTES 17 SECONDS EAST, A DISTANCE OF 12.17 FEET;

THENCE SOUTH 89 DEGREES 33 MINUTES 43 SECONDS WEST, A DISTANCE OF 2.00 FEET;

THENCE SOUTH 00 DEGREES 26 MINUTES 17 SECONDS EAST, A DISTANCE OF 183.50 FEET;

THENCE NORTH 89 DEGREES 33 MINUTES 43 SECONDS EAST, A DISTANCE OF 2.00 FEET;

THENCE SOUTH 00 DEGREES 26 MINUTES 17 SECONDS EAST, A DISTANCE OF 28.17 FEET;

THENCE SOUTH 89 DEGREES 33 MINUTES 43 SECONDS WEST, A DISTANC OF 2.00 FEET;

THENCE SOUTH 00 DEGREES 26 MINUTES 17 SECONDS EAST, A DISTANCE OF 182.43 FEET TO A POWER DISTRIBUTION EASEMENT PER DOCUMENT 2009-0226631 MCR;

THENCE ALONG SAID EASEMENT, SOUTH 89 DEGREES 33 MINUTES 43 SECONDS WEST, A DISTANCE OF 8.00 FEET TO SAID **POINT OF BEGINNING OF EASEMENT NO. 3.**

SAID **EASEMENT NO. 3** CONTAINS AN AREA OF 3,745.00 SQUARE FEET, MORE OR LESS.

EASEMENT NO. 4:

COMMENCING AT THE SOUTHWEST CORNER OF SAID SECTION 29, BEING A REBAR, FROM WHICH THE WEST QUARTER CORNER OF SAID SECTION 29, BEING A BRASS CAP IN HAND HOLE, BEARS NORTH 00 DEGREES 26 MINUTES 17 SECONDS WEST, A DISTANCE OF 2645.37 FEET (**BASIS OF BEARINGS**);

THENCE ALONG THE WEST LINE OF THE SOUTHWEST QUARTER OF SAID SECTION 29, NORTH 00 DEGREES 26 MINUTES 17 SECONDS WEST, A DISTANCE OF 1324.28 FEET;

THENCE NORTH 89 DGREES 33 MINUTES 43 SECONDS EAST, A DISTANCE OF 47.00 FEET TO THE **POINT OF BEGINNING OF EASEMENT NO. 4;**

THENCE NORTH 00 DEGREES 26 MINUTES 17 SECONDS WEST, A DISTANCE OF 665.47 FEET;

THENCE NORTH 09 DEGREES 59 MINUTES 42 SECONDS WEST, A DISTANCE OF 54.21 FEET;

THENCE NORTH 00 DEGREES 26 MINUTES 17 SECONDS WEST, A DISTANCE OF 178.01 FEET;

THENCE NORTH 89 DEGREES 33 MINUTES 43 SECONDS EAST, A DISTANCE OF 9.00 FEET;

THENCE NORTH 00 DEGREES 26 MINUTES 17 SECONDS WEST, A DISTANCE OF 195.58 FEET;

THENCE SOUTH 89 DEGREES 33 MINUTES 43 SECONDS WEST, A DISTANCE OF 20.26 FEET;

THENCE NORTH 00 DEGREES 26 MINUTES 17 SECONDS WEST, A DISTANCE OF 8.00 FEET;

THENCE NORTH 89 DEGREES 33 MINUTES 43 SECONDS EAST, A DISTANCE OF 20.26 FEET;

THENCE NORTH 00 DEGRES 26 MINUTES 17 SECONDS WEST, A DISTANCE OF 193.39 FEET;

THENCE NORTH 49 DEGREES 05 MINUTES 25 SECONDS WEST, A DISTANCE OF 8.00 FEET;

THENCE NORTH 00 DEGREES 26 MINUTES 17 SECONDS WEST, A DISTANCE OF 1.95 FEET;

THENCE NORTH 89 DEGREES 29 MINUTES 31 SECONDS EAST, A DISTANCE OF 9.88 FEET;

THENCE SOUTH 49 DEGREES 05 MINUTES 25 SECONDS EAST, A DISTANCE OF 5.50 FEET;

THENCE SOUTH 00 DEGREES 26 MINUTES 17 SECONDS EAST, A DISTANCE OF 408.58 FEET;

THENCE SOUTH 89 DEGREES 33 MINUTES 43 SECONDS WEST, A DISTANCE OF 9.00 FEET;

THENCE SOUTH 00 DEGREES 26 MINUTES 17 SECONDS EAST, A DISTANCE OF 169.34 FEET;

THENCE SOUTH 09 DEGREES 59 MINUTES 42 SECONDS EAST, A DISTANCE OF 54.21 FEET;

THENCE SOUTH 00 DEGREES 26 MINUTES 17 SECONDS EAST, A DISTANCE OF 663.55 FEET;

THENCE SOUTH 36 DEGREES 18 MINUTES 17 SECONDS EAST, A DISTANCE OF 5.47 FEET TO THE NORTHERLY BOUNDARY OF FALCON ESTATES PER BOOK 638 PAGE 35 MCR;

THENCE ALONG SAID NORTHERLY BOUNDARY, SOUTH 89 DEGREES 31 MINUTES 47 SECONDS WEST, A DISTANCE OF 3.21 FEET;

THENCE ALONG THE WESTERLY BOUNDARY OF SAID FALCON ESTATES, SOUTH 00 DEGREES 26 MINUTES 17 SECONDS EAST, A DISTANCE OF 8.28 FEET;

THENCE SOUTH 89 DEGREES 33 MINUTES 43 SECONDS WEST, A DISTANCE OF 0.68 FEET;

THENCE NORTH 36 DEGREES 18 MINUTES 17 SECONDS WEST, A DISTANCE OF 12.49 FEET TO SAID **POINT OF BEGINNING OF EASEMENT NO. 4.**

SAID **EASEMENT NO. 4** CONTAINS AN AREA OF 10,721.80 SQUARE FEET, MORE OR LESS.

THIS DOCUMENT DESCRIBES MULTIPLE EASEMENTS EACH INTERDEPENDENT ON THE OTHER AND SHOULD BE REPRODUCED IN ITS ENTIRETY.

END OF DESCRIPTION

REGISTERED LAND SURVEYOR
CERTIFICATE NO.
48253
KATIE
THOMAS
08-12-2025
Date Signed
ARIZONA, U.S.A.

EXHIBIT "A"

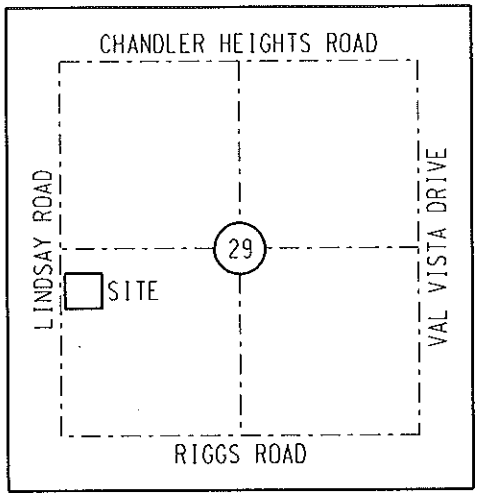

VICINITY MAP (NTS)
T2S, R6E
G&SRM

LEGEND

- SECTION AND CENTERLINE
- PROPERTY LINE
- LIMITS OF EASEMENT
- EXISTING EASEMENT AS NOTED
- TIE LINE
- SECTION CORNER AS NOTED

ABBREVIATION TABLE

APN	ASSESSOR'S PARCEL NUMBER
FND	FOUND
MCR	MARICOPA COUNTY RECORDER
(M)	MEASURED
NTS	NOT TO SCALE
ROW	RIGHT OF WAY

REGISTERED LAND SURVEYOR
CERTIFICATE NO.
48253
KATIE
THOMAS
08-12-2025
Date Signed
ARIZONA, U.S.A.

BASIS OF BEARINGS:
BASED ON THE MARICOPA COUNTY
LOW DISTORTION PROJECTION
COORDINATE SYSTEM.

CAUTION

THE EASEMENT LOCATION AS HEREON DELINEATED MAY CONTAIN HIGH VOLTAGE ELECTRICAL EQUIPMENT. NOTICE IS HEREBY GIVEN THAT THE LOCATION OF UNDERGROUND ELECTRICAL CONDUCTORS OR FACILITIES MUST BE VERIFIED AS REQUIRED BY ARIZONA REVISED STATUTES, SECTION 40-380.21, ET. SEQ., ARIZONA BLUE STAKE LAW, PRIOR TO ANY EXCAVATION.

NOTES

THIS EXHIBIT IS INTENDED TO ACCOMPANY AN EASEMENT. ALL PARCELS SHOWN WERE PLOTTED FROM RECORD INFORMATION, AND NO ATTEMPT HAS BEEN MADE TO VERIFY THE LOCATION OF ANY BOUNDARIES SHOWN. THIS IS NOT AN ARIZONA BOUNDARY SURVEY.

ALL ELECTRIC LINES SHOWN ARE MEASURED TO THE WINDOW OF THE EQUIPMENT PAD UNLESS OTHERWISE NOTED.

SALT RIVER PROJECT
AGRICULTURAL IMPROVEMENT & POWER DISTRICT

SRP JOB NUMBER: T3445714	SCALE: NTS
AGENT: C BALTRUS	SHEET: 6 OF 14
DRAWN: K THOMAS	SHEET SIZE: 8.5"x11"
DATE: 08-12-2025 ASM	REVISION: 2

SRP SURVEY DIVISION
LAND DEPARTMENT

CUS UE CH BA LINDSAY RD
UG CONV
SW 1/4 SECTION 29
T.2 S., R.6 E.
10.25 SOUTH-31.06 EAST

EXHIBIT "A"

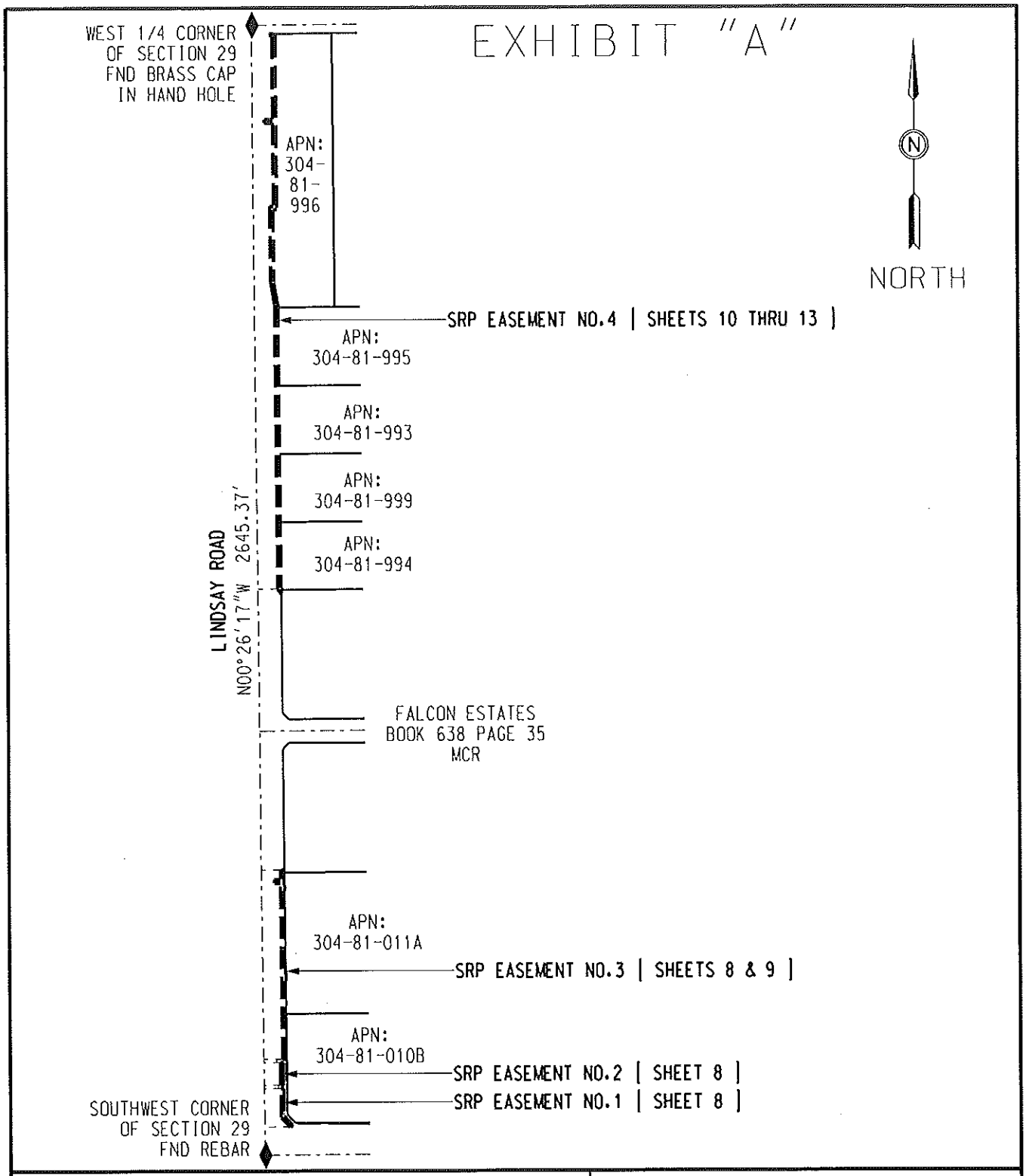

SALT RIVER PROJECT
AGRICULTURAL IMPROVEMENT & POWER DISTRICT

SURVEY DIVISION
LAND DEPARTMENT

SRP JOB NUMBER: T3445714	SCALE: NTS
AGENT: C BALTRUS	SHEET: 7 OF 14
DRAWN: K THOMAS	SHEET SIZE: 8.5"x11"
DATE: 08-12-2025 ASM	REVISION: 2

CUS UE CH BA LINDSAY RD
UG CONV
SW 1/4 SECTION 29
T.2 S., R.6 E.
10.25 SOUTH-31.06 EAST

EXHIBIT "A"

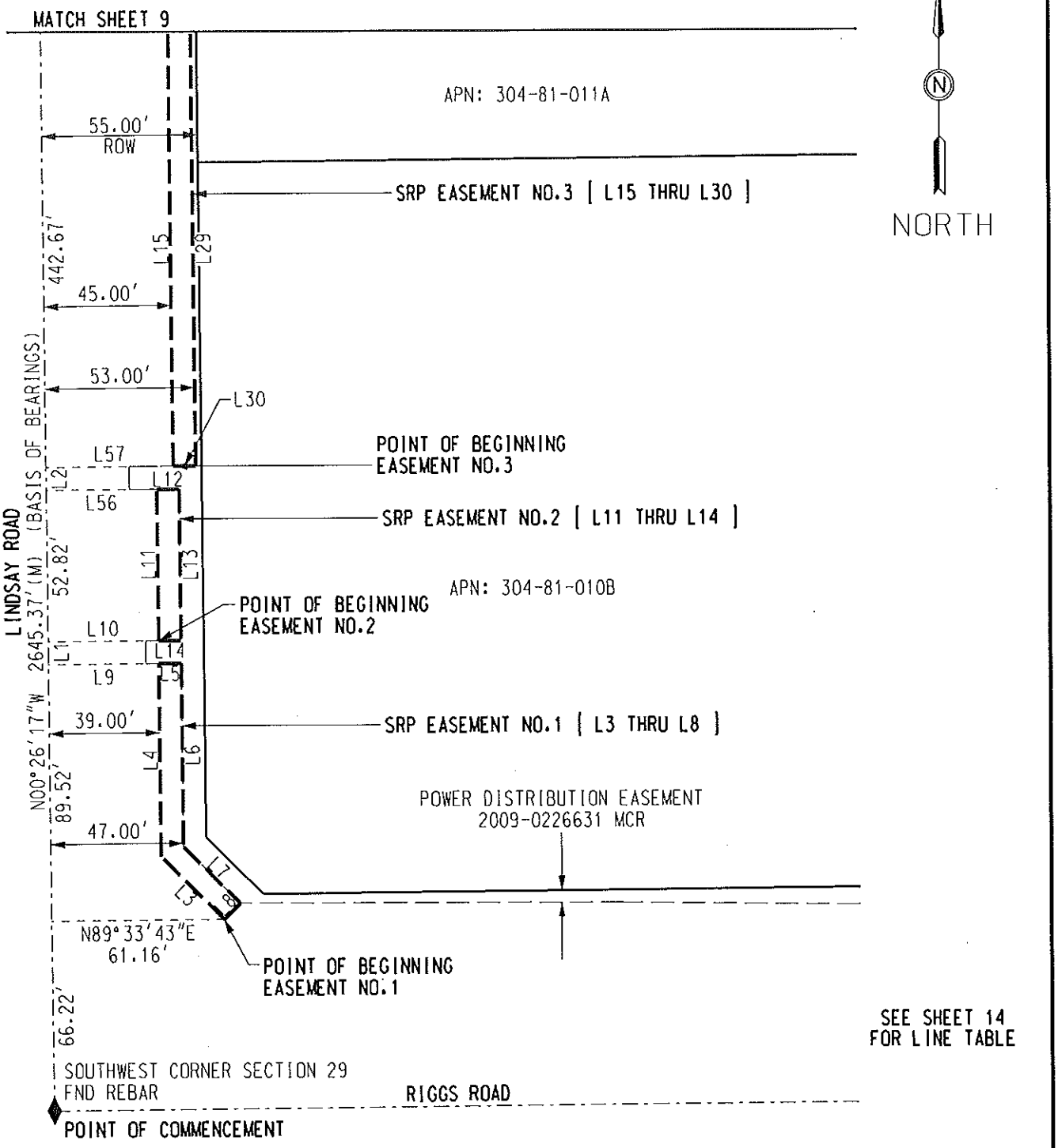

SALT RIVER PROJECT
AGRICULTURAL IMPROVEMENT & POWER DISTRICT

SURVEY DIVISION
LAND DEPARTMENT

SRP JOB NUMBER: T3445714	SCALE: NTS
AGENT: C BALTRUS	SHEET: 8 OF 14
DRAWN: K THOMAS	SHEET SIZE: 8.5"x11"
DATE: 08-12-2025 ASM	REVISION: 2

CUS UE CH BA LINDSAY RD
UG CONV
SW 1/4 SECTION 29
T.2 S., R.6 E.
10.25 SOUTH-31.06 EAST

EXHIBIT "A"

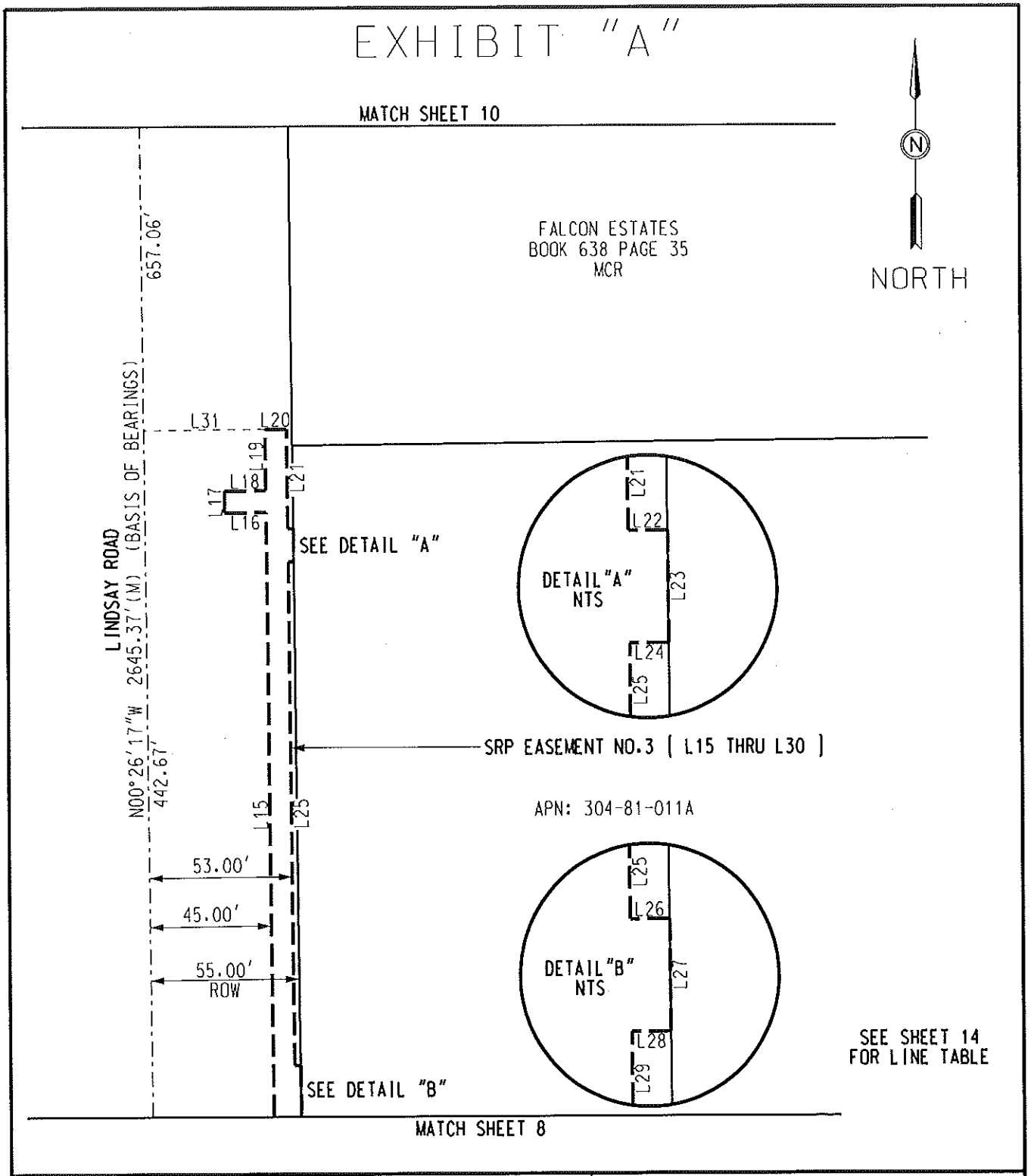

SALT RIVER PROJECT
AGRICULTURAL IMPROVEMENT & POWER DISTRICT

SURVEY DIVISION
LAND DEPARTMENT

CUS UE CH BA LINDSAY RD
UG CONV
SW 1/4 SECTION 29
T.2 S., R.6 E.
10.25 SOUTH-31.06 EAST

SRP JOB NUMBER: T3445714	SCALE: NTS
AGENT: C BALTRUS	SHEET: 9 OF 14
DRAWN: K THOMAS	SHEET SIZE: 8.5"x11"
DATE: 08-12-2025 ASM	REVISION: 2

EXHIBIT "A"

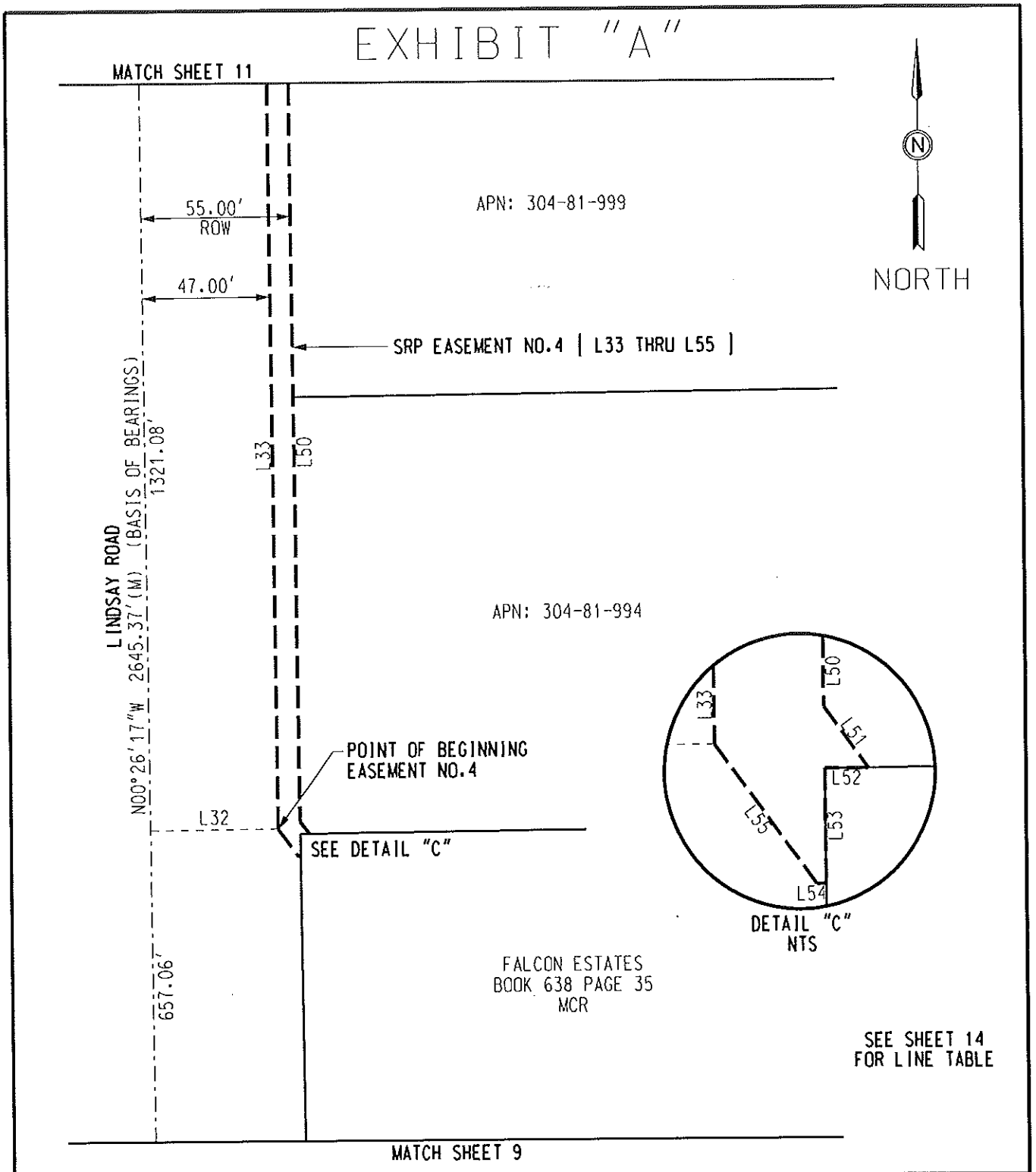

SALT RIVER PROJECT
AGRICULTURAL IMPROVEMENT & POWER DISTRICT

SURVEY DIVISION
LAND DEPARTMENT

CUS UE CH BA LINDSAY RD
UG CONV
SW 1/4 SECTION 29
T.2 S., R.6 E.
10.25 SOUTH-31.06 EAST

SRP JOB NUMBER: T3445714	SCALE: NTS
AGENT: C BALTRUS	SHEET: 10 OF 14
DRAWN: K THOMAS	SHEET SIZE: 8.5"x11"
DATE: 08-12-2025 ASM	REVISION: 2

EXHIBIT "A"

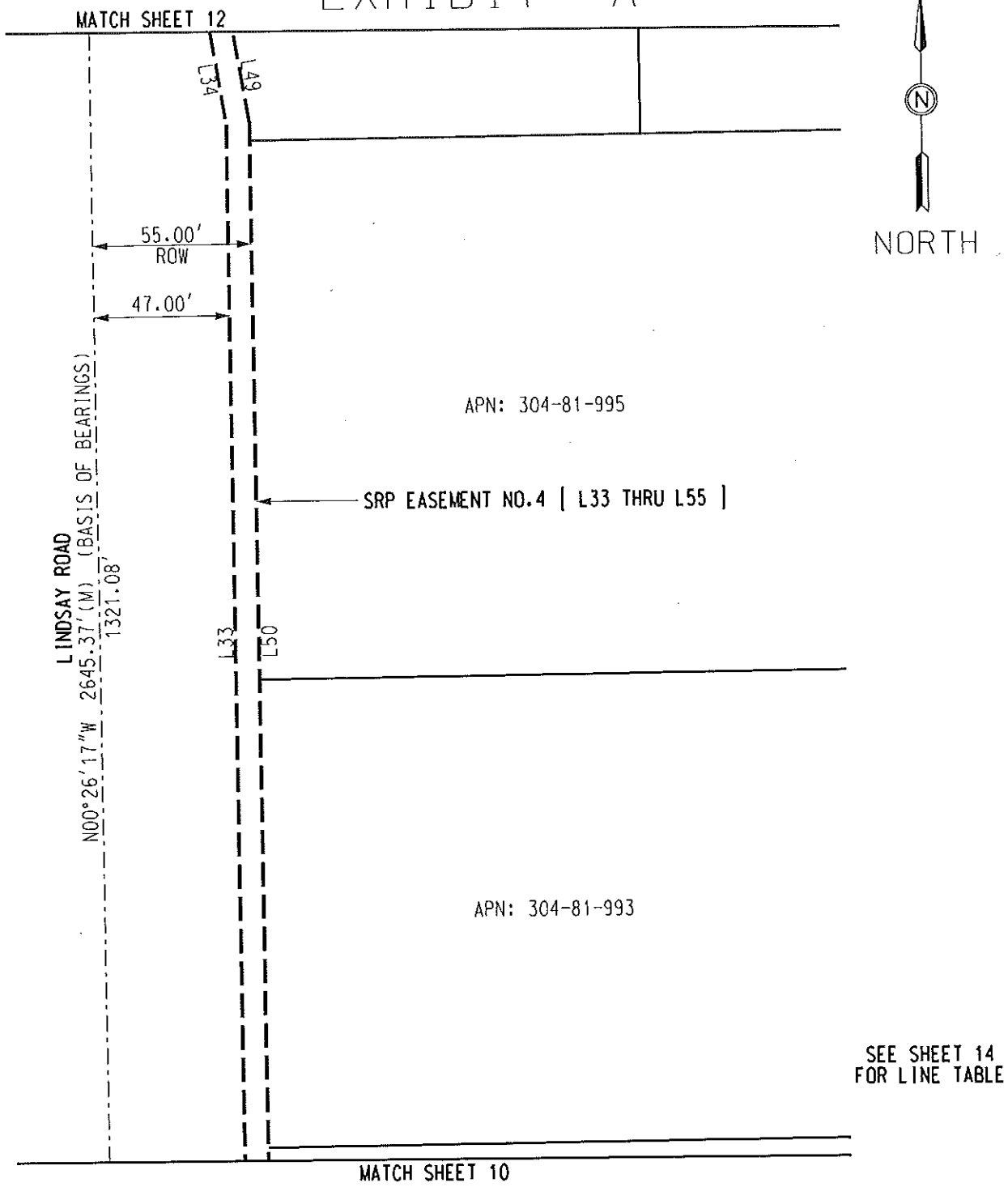

SALT RIVER PROJECT
AGRICULTURAL IMPROVEMENT & POWER DISTRICT

SURVEY DIVISION
LAND DEPARTMENT

CUS UE CH BA LINDSAY RD
UG CONV
SW 1/4 SECTION 29
T.2 S., R.6 E.
10.25 SOUTH-31.06 EAST

SRP JOB NUMBER: T3445714	SCALE: NTS
AGENT: C BALTRUS	SHEET: 11 OF 14
DRAWN: K THOMAS	SHEET SIZE: 8.5"x11"
DATE: 08-12-2025 ASM	REVISION: 2

EXHIBIT "A"

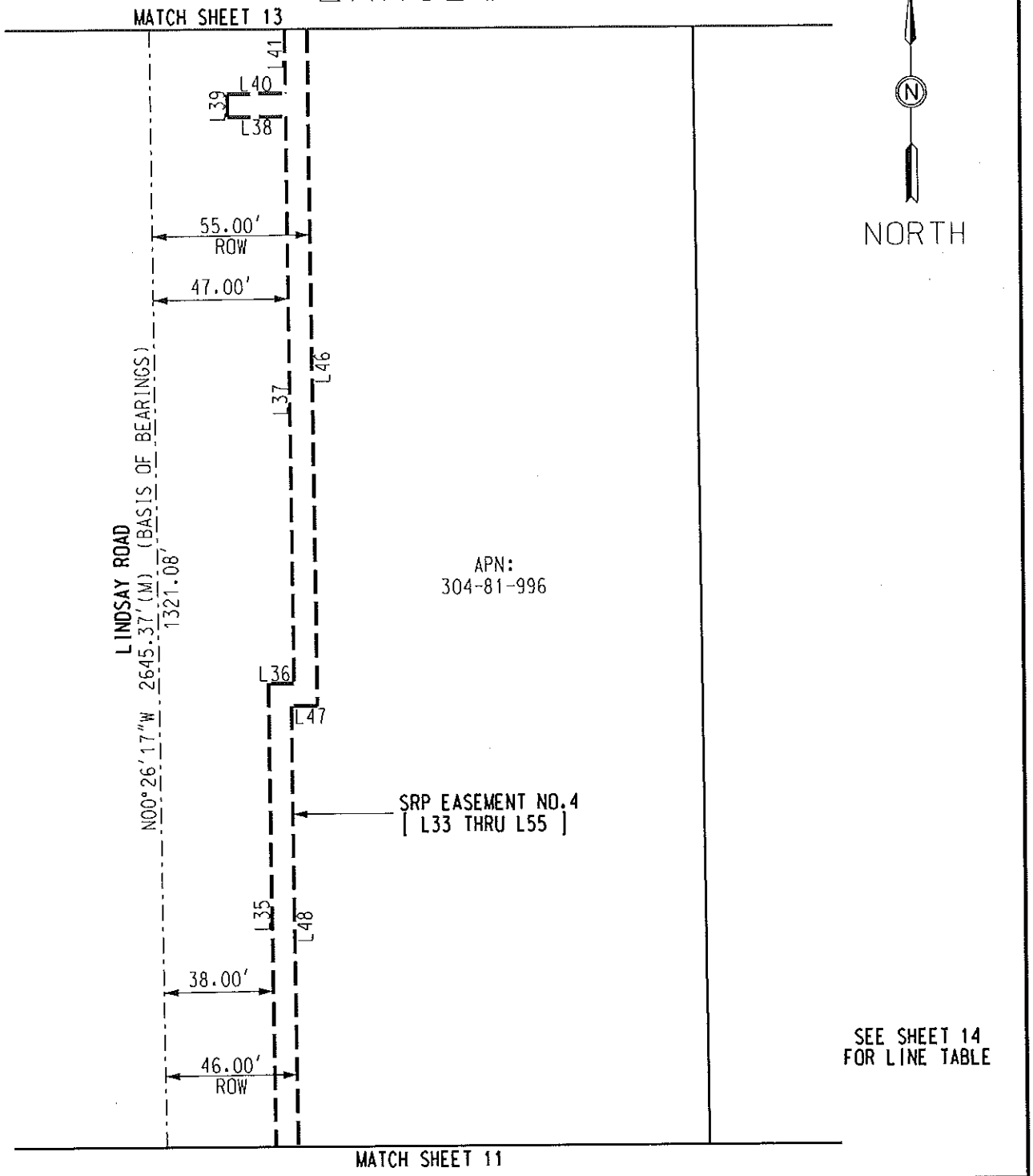

SALT RIVER PROJECT
AGRICULTURAL IMPROVEMENT & POWER DISTRICT

SURVEY DIVISION
LAND DEPARTMENT

CUS UE CH BA LINDSAY RD
UG CONV
SW 1/4 SECTION 29
T.2 S., R.6 E.
10.25 SOUTH-31.06 EAST

SRP JOB NUMBER: T3445714	SCALE: NTS
AGENT: C BALTRUS	SHEET: 12 OF 14
DRAWN: K THOMAS	SHEET SIZE: 8.5"x11"
DATE: 08-12-2025 ASM	REVISION: 2

EXHIBIT "A"

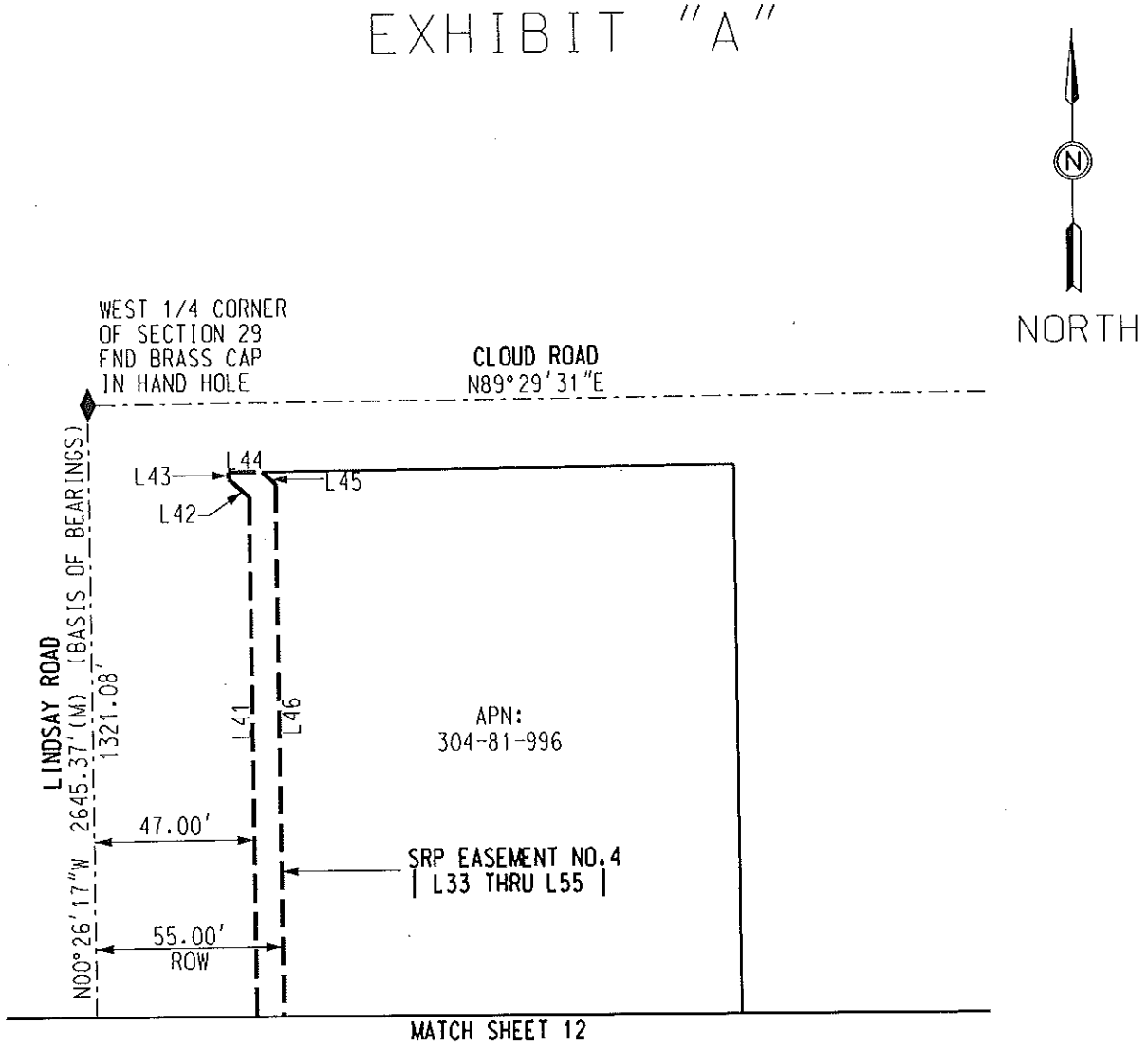

SEE SHEET 14
FOR LINE TABLE

SALT RIVER PROJECT
AGRICULTURAL IMPROVEMENT & POWER DISTRICT

SURVEY DIVISION
LAND DEPARTMENT

CUS UE CH BA LINDSAY RD
UG CONV
SW 1/4 SECTION 29
T.2 S., R.6 E.
10.25 SOUTH-31.06 EAST

SRP JOB NUMBER: T3445714	SCALE: NTS
AGENT: C BALTRUS	SHEET: 13 OF 14
DRAWN: K THOMAS	SHEET SIZE: 8.5"x11"
DATE: 08-12-2025 ASM	REVISION: 2

EXHIBIT "A"

LINE TABLE		
LINE	BEARING	DISTANCE
L1	N00°26'17"W	8.00'
L2	N00°26'17"W	7.99'
L3	N45°26'26"W	31.34'
L4	N00°26'17"W	67.36'
L5	N89°31'49"E	8.00'
L6	S00°26'17"E	64.05'
L7	S45°26'26"E	28.03'
L8	S44°33'34"W	8.00'
L9	N89°33'43"E	39.00'
L10	N89°33'43"E	39.00'
L11	N00°26'17"W	52.82'
L12	N89°33'43"E	8.00'
L13	S00°26'17"E	52.82'
L14	S89°31'49"W	8.00'
L15	N00°26'17"W	412.25'
L16	S89°33'43"W	15.36'
L17	N00°26'17"W	8.00'
L18	N89°33'43"E	15.36'
L19	N00°26'17"W	22.42'
L20	N89°33'43"E	8.00'
L21	S00°26'17"E	36.40'
L22	N89°33'43"E	2.00'
L23	S00°26'17"E	12.17'
L24	S89°33'43"W	2.00'
L25	S00°26'17"E	183.50'
L26	N89°33'43"E	2.00'
L27	S00°26'17"E	28.17'
L28	S89°33'43"W	2.00'
L29	S00°26'17"E	182.43'
L30	S89°33'43"W	8.00'
L31	N89°33'43"E	45.00'
L32	N89°33'43"E	47.00'
L33	N00°26'17"W	665.47'
L34	N09°59'42"W	54.21'
L35	N00°26'17"W	178.01'
L36	N89°33'43"E	9.00'
L37	N00°26'17"W	195.58'
L38	S89°33'43"W	20.26'
L39	N00°26'17"W	8.00'
L40	N89°33'43"E	20.26'

LINE TABLE		
LINE	BEARING	DISTANCE
L41	N00°26'17"W	193.39'
L42	N49°05'25"W	8.00'
L43	N00°26'17"W	1.95'
L44	N89°29'31"E	9.88'
L45	S49°05'25"E	5.50'
L46	S00°26'17"E	408.58'
L47	S89°33'43"W	9.00'
L48	S00°26'17"E	169.34'
L49	S09°59'42"E	54.21'
L50	S00°26'17"E	663.55'
L51	S36°18'17"E	5.47'
L52	S89°31'47"W	3.21'
L53	S00°26'17"E	8.28'
L54	S89°33'43"W	0.68'
L55	N36°18'17"W	12.49'
L56	N89°33'43"E	39.00'
L57	N89°33'43"E	45.00'

SALT RIVER PROJECT
AGRICULTURAL IMPROVEMENT & POWER DISTRICT

SURVEY DIVISION
LAND DEPARTMENT

CUS UE CH BA LINDSAY RD
UG CONV
SW 1/4 SECTION 29
T.2 S., R.6 E.
10.25 SOUTH-31.06 EAST

SRP JOB NUMBER: T3445714	SCALE: NTS
AGENT: C BALTRUS	SHEET: 14 OF 14
DRAWN: K THOMAS	SHEET SIZE: 8.5"x11"
DATE: 08-12-2025 ASM	REVISION: 2

EXHIBIT "A"

SRP JOB NUMBER: T3445714
SRP JOB NAME: CUS UE CH BA LINDSAY RD UG CONV
TTRRSS: 02S06E29

DATE: 08-12-2025

AN EASEMENT LOCATED IN THE NORTHWEST QUARTER OF SECTION 29, TOWNSHIP 2 SOUTH, RANGE 6 EAST, OF THE GILA AND SALT RIVER MERIDIAN, MARICOPA COUNTY, ARIZONA, BEING MORE PARTICULARLY DESCRIBED AS FOLLOWS:

COMMENCING AT THE WEST QUARTER CORNER OF SAID SECTION 29, BEING A BRASS CAP IN HAND HOLE, FROM WHICH THE NORTHWEST CORNER OF SAID SECTION 29, BEING A REBAR, BEARS NORTH 00 DEGREES 25 MINUTES 40 SECONDS WEST, A DISTANCE OF 2616.10 FEET (**BASIS OF BEARINGS**);

THENCE NORTH 63 DEGREES 30 MINUTES 15 SECONDS EAST, A DISTANCE OF 45.64 FEET TO THE **POINT OF BEGINNING;**

THENCE NORTH 00 DEGREES 25 MINUTES 40 SECONDS WEST, A DISTANCE OF 1237.41 FEET;

THENCE SOUTH 89 DEGREES 23 MINUTES 16 SECONDS WEST, A DISTANCE OF 12.43 FEET;

THENCE NORTH 00 DEGREES 36 MINUTES 44 SECONDS WEST, A DISTANCE OF 8.00 FEET;

THENCE NORTH 89 DEGREES 23 MINUTES 16 SECONDS EAST, A DISTANCE OF 12.45 FEET;

THENCE NORTH 00 DEGREES 25 MINUTES 40 SECONDS WEST, A DISTANCE OF 146.07 FEET;

THENCE NORTH 89 DEGREES 34 MINUTES 20 SECONDS EAST, A DISTANCE OF 8.00 FEET;

THENCE SOUTH 00 DEGREES 25 MINUTES 40 SECONDS EAST, A DISTANCE OF 5.91 FEET;

THENCE NORTH 89 DEGREES 34 MINUTES 20 SECONDS EAST, A DISTANCE OF 6.00 FEET;

THENCE SOUTH 00 DEGREES 25 MINUTES 40 SECONDS EAST, A DISTANCE OF 19.34 FEET;

THENCE SOUTH 89 DEGREES 34 MINUTES 20 SECONDS WEST, A DISTANCE OF 6.00 FEET;

THENCE SOUTH 00 DEGREES 25 MINUTES 40 SECONDS EAST, A DISTANCE OF 837.12 FEET;

THENCE NORTH 89 DEGREES 34 MINUTES 20 SECONDS EAST, A DISTANCE OF 6.00 FEET;

THENCE SOUTH 00 DEGREES 25 MINUTES 40 SECONDS EAST, A DISTANCE OF 28.17 FEET;

THENCE SOUTH 89 DEGREES 34 MINUTES 20 SECONDS WEST, A DISTANCE OF 6.00 FEET;

THENCE SOUTH 00 DEGREES 25 MINUTES 40 SECONDS EAST, A DISTANCE OF 500.92 FEET;

THENCE SOUTH 89 DEGREES 29 MINUTES 31 SECONDS WEST, A DISTANCE OF 8.00 FEET TO SAID **POINT OF BEGINNING**.

SAID **EASEMENT** CONTAINS AN AREA OF 11,516.30 SQUARE FEET, MORE OR LESS.

END OF DESCRIPTION

REGISTERED LAND SURVEYOR
CERTIFICATE NO.
48253
KATIE
THOMAS
08-12-2025
Date Signed
ARIZONA, U.S.A.

EXHIBIT "A"

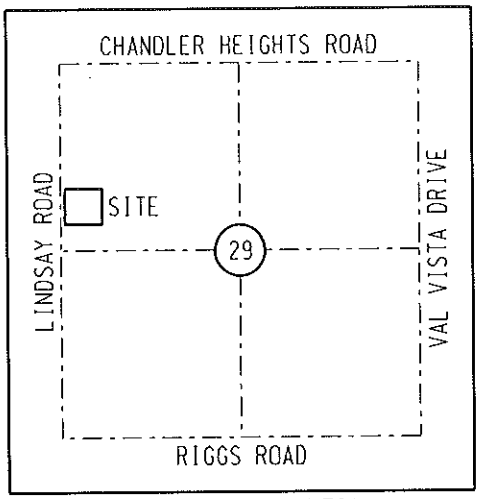

VICINITY MAP (NTS)
T2S, R6E
G&SRM

LEGEND

- SECTION AND CENTERLINE
- PROPERTY LINE
- LIMITS OF EASEMENT
- EXISTING EASEMENT AS NOTED
- TIE LINE
- SECTION CORNER AS NOTED

ABBREVIATION TABLE

APN	ASSESSOR'S PARCEL NUMBER
FND	FOUND
MCR	MARICOPA COUNTY RECORDER
(M)	MEASURED
NTS	NOT TO SCALE
ROW	RIGHT OF WAY

REGISTERED LAND SURVEYOR
CERTIFICATE NO.
48253
KATIE
THOMAS
08-12-2025
Date Signed
ARIZONA, U.S.A.

BASIS OF BEARINGS:
BASED ON THE MARICOPA COUNTY
LOW DISTORTION PROJECTION
COORDINATE SYSTEM.

CAUTION

THE EASEMENT LOCATION AS HEREON DELINEATED MAY CONTAIN HIGH VOLTAGE ELECTRICAL EQUIPMENT, NOTICE IS HEREBY GIVEN THAT THE LOCATION OF UNDERGROUND ELECTRICAL CONDUCTORS OR FACILITIES MUST BE VERIFIED AS REQUIRED BY ARIZONA REVISED STATUTES, SECTION 40-380.21, ET. SEQ., ARIZONA BLUE STAKE LAW, PRIOR TO ANY EXCAVATION.

NOTES

THIS EXHIBIT IS INTENDED TO ACCOMPANY AN EASEMENT. ALL PARCELS SHOWN WERE PLOTTED FROM RECORD INFORMATION, AND NO ATTEMPT HAS BEEN MADE TO VERIFY THE LOCATION OF ANY BOUNDARIES SHOWN. THIS IS NOT AN ARIZONA BOUNDARY SURVEY.

ALL ELECTRIC LINES SHOWN ARE MEASURED TO THE WINDOW OF THE EQUIPMENT PAD UNLESS OTHERWISE NOTED.

SALT RIVER PROJECT
AGRICULTURAL IMPROVEMENT & POWER DISTRICT

SRP JOB NUMBER: T3445714	SCALE: NTS
AGENT: C BALTRUS	SHEET: 3 OF 8
DRAWN: K THOMAS	SHEET SIZE: 8.5"x11"
DATE: 08-12-2025 ASM	REVISION: 2

SURVEY DIVISION
LAND DEPARTMENT

CUS UE CH BA LINDSAY RD
UG CONV
NW 1/4 SECTION 29
T.2 S., R.6 E.
10.25 SOUTH-31.06 EAST

EXHIBIT "A"

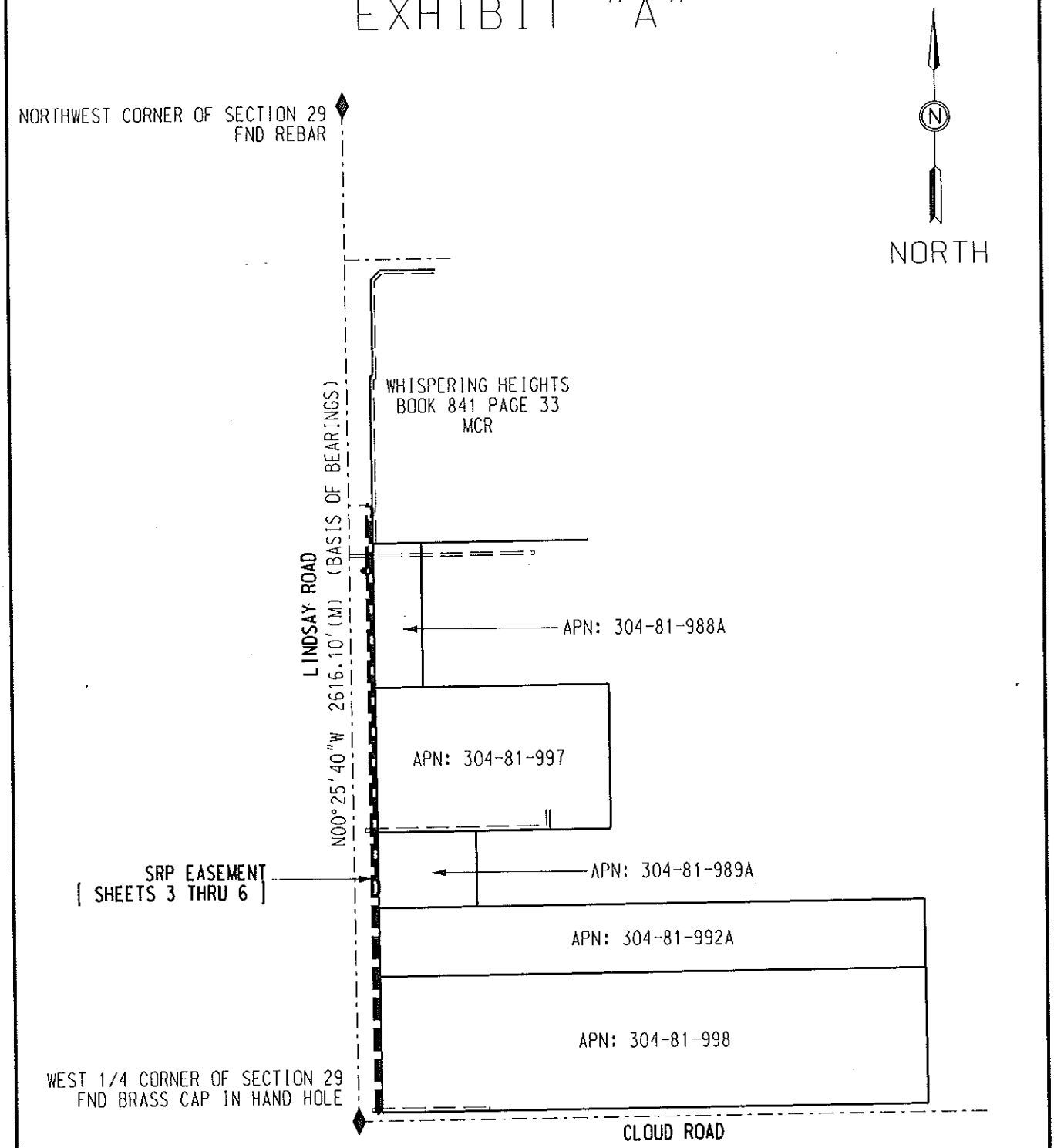

SALT RIVER PROJECT
AGRICULTURAL IMPROVEMENT & POWER DISTRICT

SURVEY DIVISION
LAND DEPARTMENT

SRP JOB NUMBER: T3445714	SCALE: NTS
AGENT: C BALTRUS	SHEET: 4 OF 8
DRAWN: K THOMAS	SHEET SIZE: 8.5"x11"
DATE: 08-12-2025 ASM	REVISION: 2

CUS UE CH BA LINDSAY RD
UG CONV
NW 1/4 SECTION 29
T.2 S., R.6 E.
10.25 SOUTH-31.06 EAST

EXHIBIT "A"

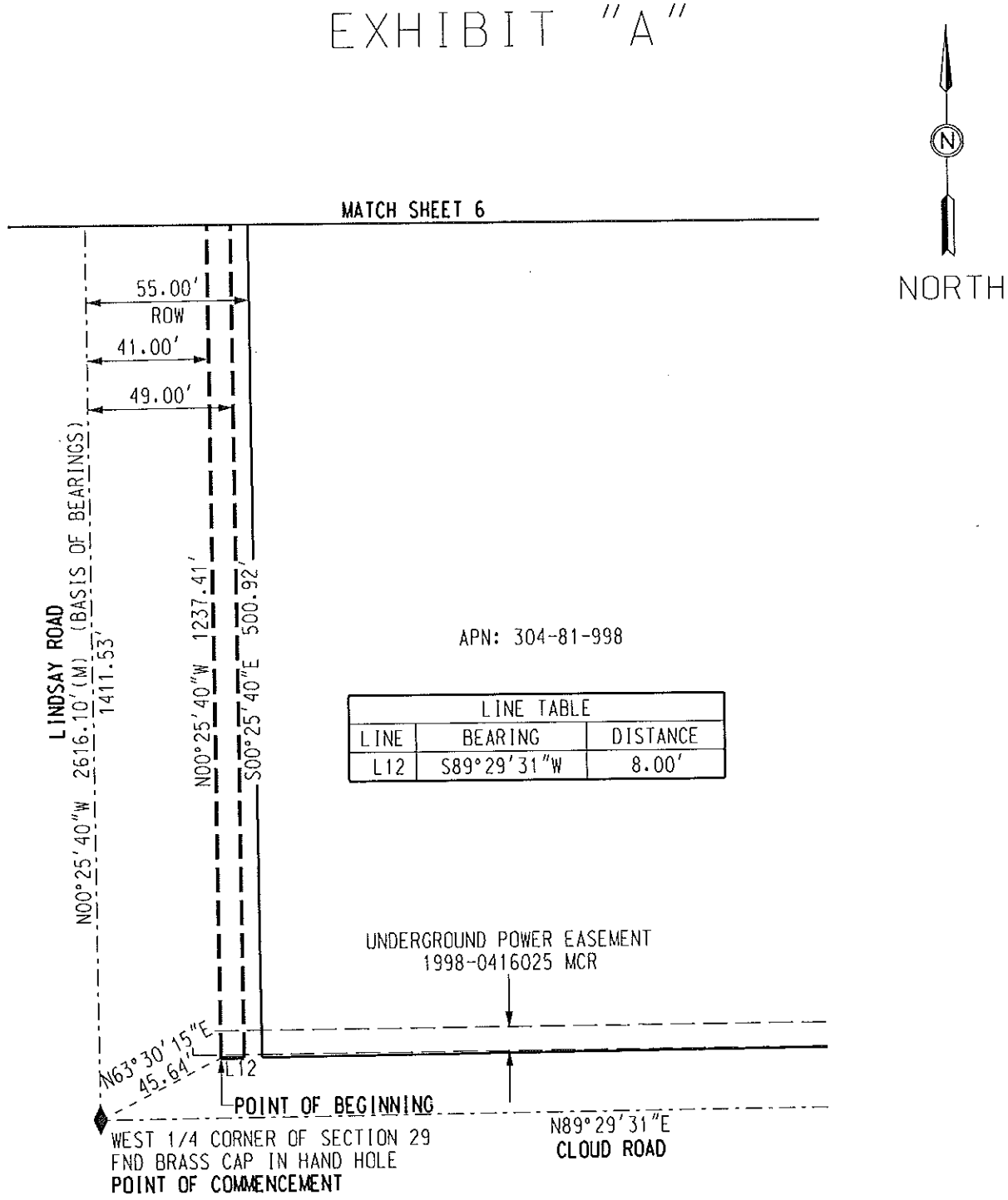

LINE TABLE		
LINE	BEARING	DISTANCE
L12	S89°29'31"W	8.00'

SALT RIVER PROJECT
AGRICULTURAL IMPROVEMENT & POWER DISTRICT

SURVEY DIVISION
LAND DEPARTMENT

CUS UE CH BA LINDSAY RD
UG CONV
NW 1/4 SECTION 29
T.2 S., R.6 E.
10.25 SOUTH-31.06 EAST

SRP JOB NUMBER: T3445714	SCALE: NTS
AGENT: C BALTRUS	SHEET: 5 OF 8
DRAWN: K THOMAS	SHEET SIZE: 8.5"x11"
DATE: 08-12-2025 ASM	REVISION: 2

EXHIBIT "A"

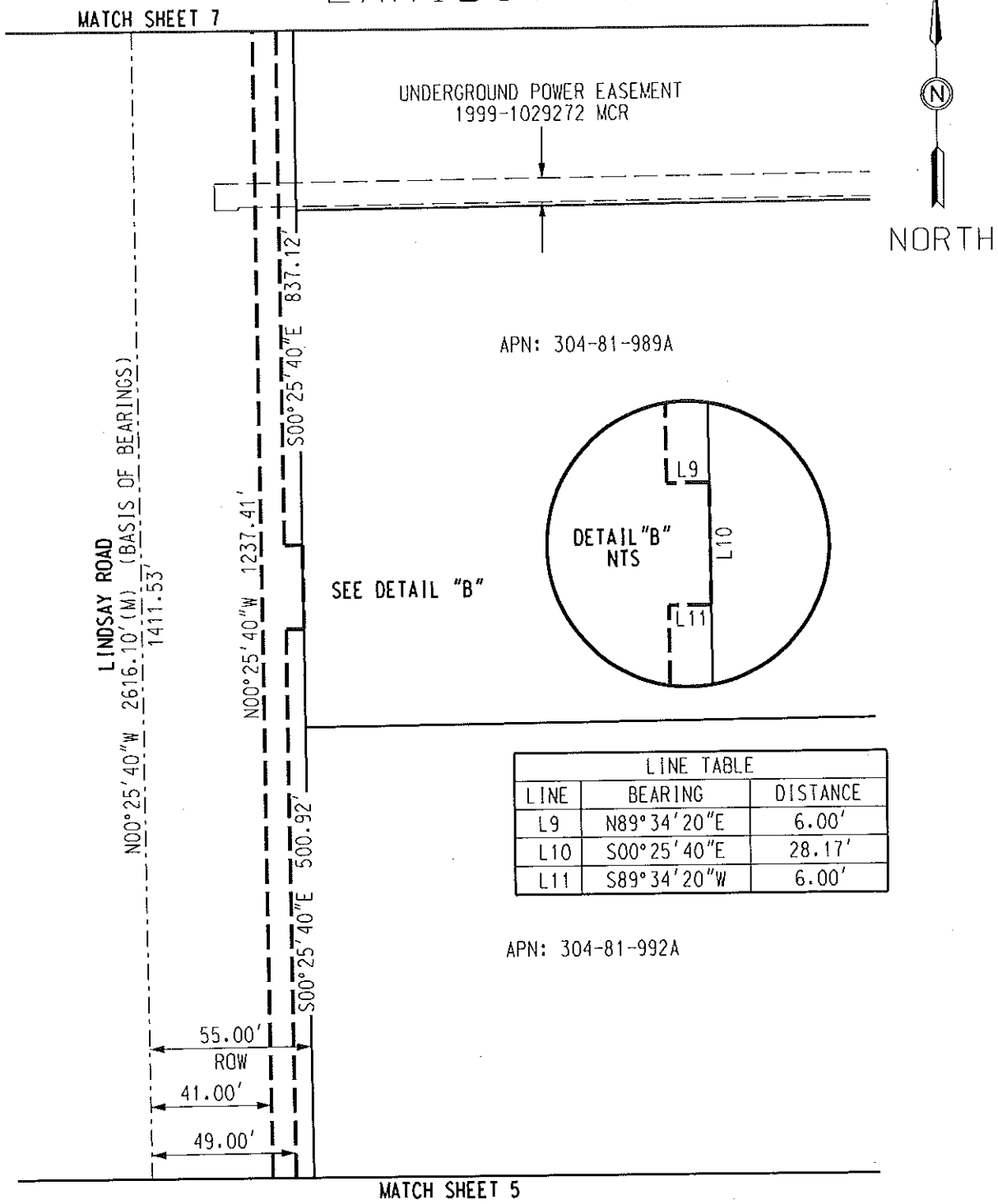

LINE TABLE		
LINE	BEARING	DISTANCE
L9	N89°34'20"E	6.00'
L10	S00°25'40"E	28.17'
L11	S89°34'20"W	6.00'

SALT RIVER PROJECT
AGRICULTURAL IMPROVEMENT & POWER DISTRICT

SURVEY DIVISION
LAND DEPARTMENT

CUS UE CH BA LINDSAY RD
UG CONV
NW 1/4 SECTION 29
T.2 S., R.6 E.
10.25 SOUTH-31.06 EAST

SRP JOB NUMBER: T3445714	SCALE: NTS
AGENT: C BALTRUS	SHEET: 6 OF 8
DRAWN: K THOMAS	SHEET SIZE: 8.5"x11"
DATE: 08-12-2025 ASM	REVISION: 2

EXHIBIT "A"

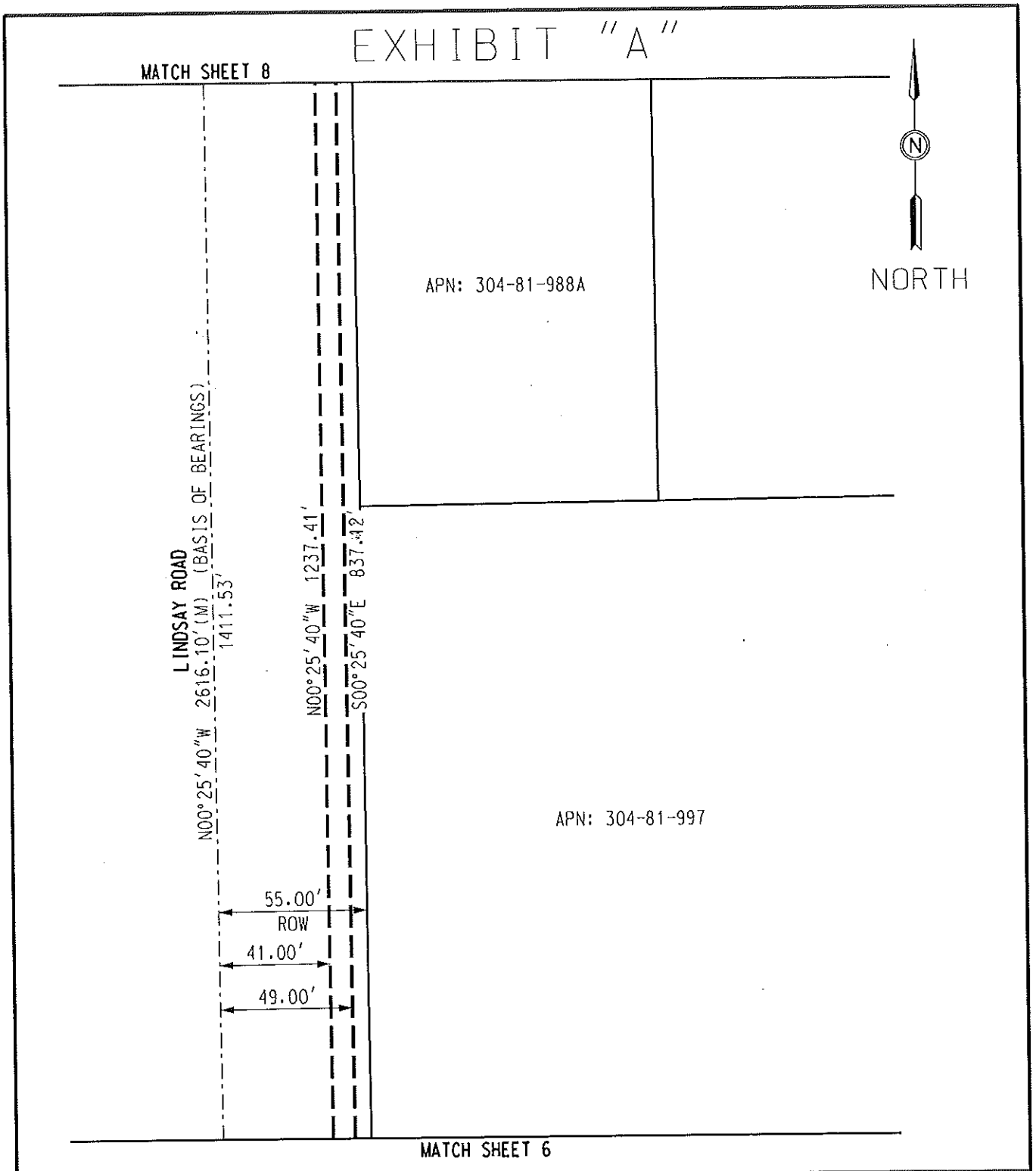

SALT RIVER PROJECT
AGRICULTURAL IMPROVEMENT & POWER DISTRICT

SURVEY DIVISION
LAND DEPARTMENT

CUS UE CH BA LINDSAY RD
UG CONV
NW 1/4 SECTION 29
T.2 S., R.6 E.
10.25 SOUTH-31.06 EAST

SRP JOB NUMBER: T3445714	SCALE: NTS
AGENT: C BALTRUS	SHEET: 7 OF 8
DRAWN: K THOMAS	SHEET SIZE: 8.5"x11"
DATE: 08-12-2025 ASM	REVISION: 2

EXHIBIT "A"

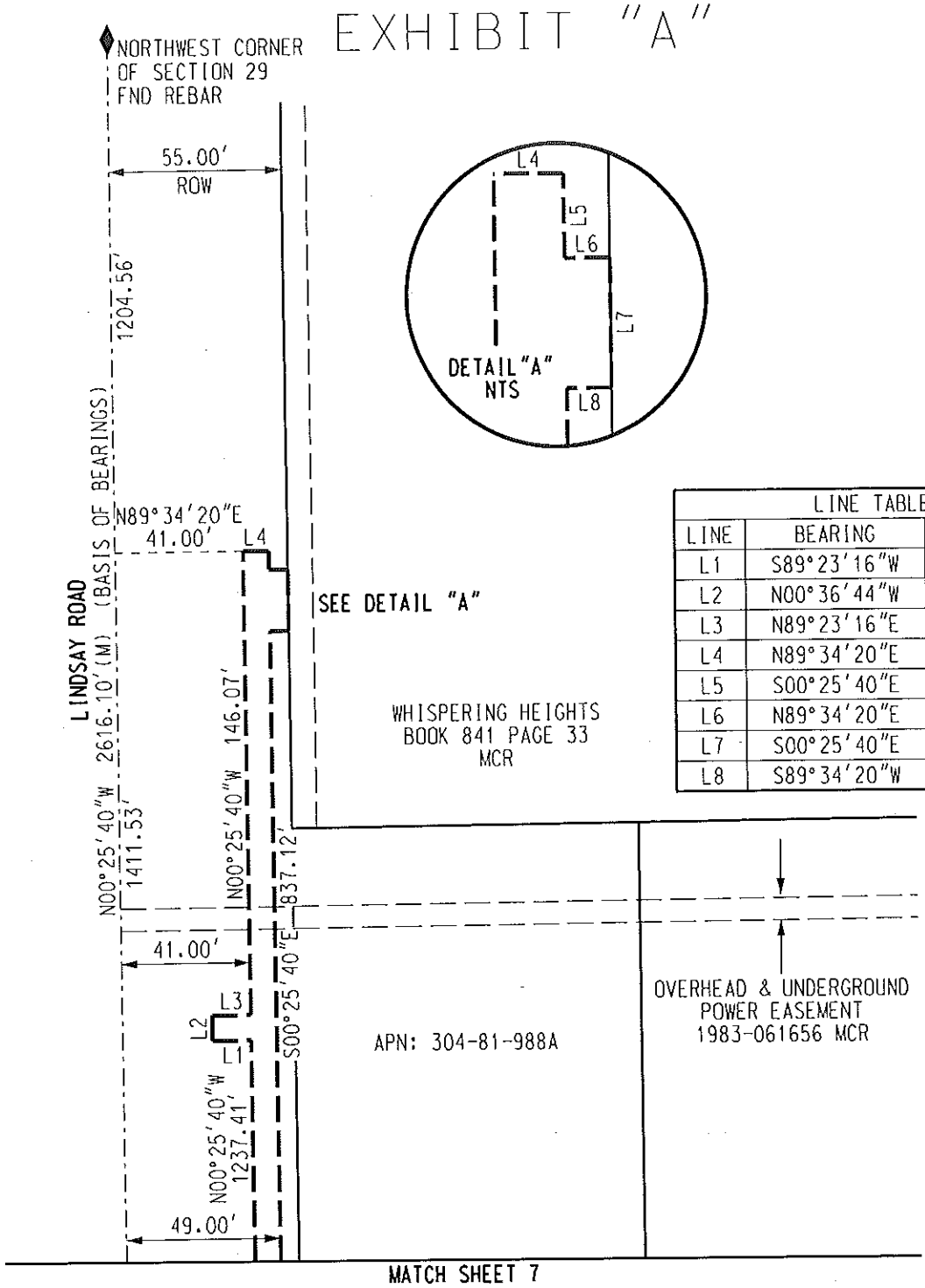

LINE TABLE		
LINE	BEARING	DISTANCE
L1	S89°23'16"W	12.43'
L2	N00°36'44"W	8.00'
L3	N89°23'16"E	12.45'
L4	N89°34'20"E	8.00'
L5	S00°25'40"E	5.91'
L6	N89°34'20"E	6.00'
L7	S00°25'40"E	19.34'
L8	S89°34'20"W	6.00'

SALT RIVER PROJECT
AGRICULTURAL IMPROVEMENT & POWER DISTRICT

SURVEY DIVISION
LAND DEPARTMENT

CUS UE CH BA LINDSAY RD
UG CONV
NW 1/4 SECTION 29
T.2 S., R.6 E.
10.25 SOUTH-31.06 EAST

SRP JOB NUMBER: T3445714	SCALE: NTS
AGENT: C BALTRUS	SHEET: 8 OF 8
DRAWN: K THOMAS	SHEET SIZE: 8.5"x11"
DATE: 08-12-2025 ASM	REVISION: 2

EXHIBIT "A"

SRP JOB NUMBER: T3532068
SRP JOB NAME: CUS UE CH BA LINDSAY RD RELOCATE
TTRRSS: 02S06E 20

DATE: 04-02-2025

A RELOCATION AGREEMENT LOCATED IN THE SOUTHWEST QUARTER OF SECTION 20, TOWNSHIP 2 SOUTH, RANGE 6 EAST, OF THE GILA AND SALT RIVER MERIDIAN, MARICOPA COUNTY, ARIZONA, BEING MORE PARTICULARLY DESCRIBED AS FOLLOWS;

COMMENCING AT THE WEST QUARTER CORNER OF SAID SECTION 20, BEING A BRASS CAP FLUSH, FROM WHICH THE SOUTHWEST CORNER OF SAID SECTION 20, BEING A REBAR, BEARS SOUTH 00 DEGREES 22 MINUTES 37 SECONDS WEST, A DISTANCE OF 2647.79 FEET (**BASIS OF BEARING**);

THENCE ALONG THE WEST LINE OF THE SOUTHWEST QUARTER OF SAID SECTION 20, SOUTH 00 DEGREES 22 MINUTES 37 SECONDS WEST, A DISTANCE OF 22.85 FEET;

THENCE SOUTH 89 DEGREES 37 MINUTES 23 SECONDS EAST, A DISTANCE OF 47.94 FEET TO THE **POINT OF BEGINNING**;

THENCE CONTINUING SOUTH 89 DEGREES 37 MINUTES 23 SECONDS EAST, A DISTANCE OF 7.06 FEET TO THE EASTERLY RIGHT-OF-WAY FOR LINDSAY ROAD;

THENCE ALONG SAID EASTERLY RIGHT-OF-WAY, SOUTH 00 DEGREES 22 MINUTES 37 SECONDS WEST, A DISTANCE OF 8.00 FEET;

THENCE NORTH 89 DEGREES 37 MINUTES 23 SECONDS WEST, A DISTANCE OF 1.07 FEET;

THENCE SOUTH 16 DEGREES 47 MINUTES 02 SECONDS WEST, A DISTANCE OF 6.82 FEET;

THENCE SOUTH 00 DEGREES 22 MINUTES 37 SECONDS WEST, A DISTANCE OF 60.75 FEET;

THENCE NORTH 89 DEGREES 59 MINUTES 44 SECONDS WEST, A DISTANCE OF 19.00 FEET;

THENCE NORTH 00 DEGREES 22 MINUTES 37 SECONDS EAST, A DISTANCE OF 8.00 FEET;

THENCE SOUTH 89 DEGREES 59 MINUTES 44 SECONDS EAST, A DISTANCE OF 11.00 FEET;

THENCE NORTH 00 DEGREES 22 MINUTES 37 SECONDS EAST, A DISTANCE OF 53.96 FEET;

THENCE NORTH 16 DEGREES 47 MINUTES 02 SECONDS EAST, A DISTANCE OF 13.96 FEET TO SAID **POINT OF BEGINNING.**

SAID **RELOCATION AGREEMENT** CONTAINS AN AREA OF 694.50 SQUARE FEET, MORE OR LESS.

END OF DESCRIPTION

REGISTERED LAND SURVEYOR
CERTIFICATE NO.
48253
KATIE
THOMAS
04-07-2025
Date Signed
ARIZONA, U.S.A.

EXHIBIT "A"

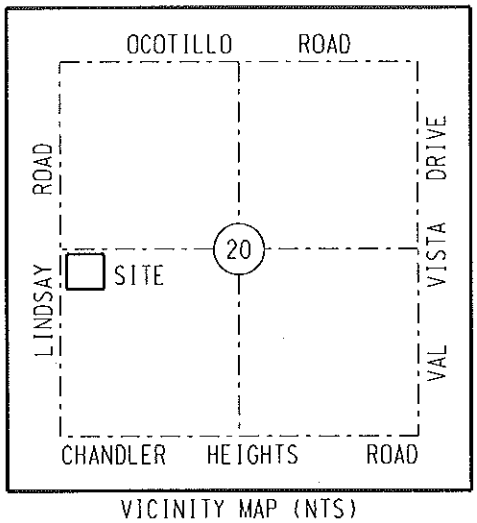

VICINITY MAP (NTS)
T2S, R6E
G&SRM

LEGEND

- SECTION AND CENTERLINE
- PROPERTY LINE
- RELOCATION AGREEMENT
- TIE LINE
- SECTION CORNER AS NOTED

ABBREVIATION TABLE

BCFL	BRASS CAP IN HAND HOLE
LVI	LAST VISUAL INSPECTION
(M)	MEASURED
NTS	NOT TO SCALE
SRP	SALT RIVER PROJECT

REGISTERED LAND SURVEYOR
CERTIFICATE NO.
48253
KATIE
THOMAS
04-07-2025
Date Signed .....
ARIZONA, U.S.A.

BASIS OF BEARINGS:
BASED ON THE MARICOPA COUNTY
LOW DISTORTION PROJECTION
COORDINATE SYSTEM.

CAUTION

THE EASEMENT LOCATION AS HEREON DELINEATED MAY CONTAIN HIGH VOLTAGE ELECTRICAL EQUIPMENT, NOTICE IS HEREBY GIVEN THAT THE LOCATION OF UNDERGROUND ELECTRICAL CONDUCTORS OR FACILITIES MUST BE VERIFIED AS REQUIRED BY ARIZONA REVISED STATUTES, SECTION 40-380.21, ET. SEQ., ARIZONA BLUE STAKE LAW, PRIOR TO ANY EXCAVATION.

NOTES

THIS EXHIBIT IS INTENDED TO ACCOMPANY AN EASEMENT. ALL PARCELS SHOWN WERE PLOTTED FROM RECORD INFORMATION, AND NO ATTEMPT HAS BEEN MADE TO VERIFY THE LOCATION OF ANY BOUNDARIES SHOWN. THIS IS NOT AN ARIZONA BOUNDARY SURVEY.

ALL ELECTRIC LINES SHOWN ARE MEASURED TO THE WINDOW OF THE EQUIPMENT PAD UNLESS OTHERWISE NOTED.

SALT RIVER PROJECT
AGRICULTURAL IMPROVEMENT & POWER DISTRICT

SRP SURVEY DIVISION
LAND DEPARTMENT

SRP LDWR NUMBER: N/A	SCALE: NTS
I.O. NUMBER: T3532068	SHEET: 2 OF 3
AGENT: BALTRUS	SHEET SIZE: 8.5"x11"
DRAWN: RUSSO	REVISION: 0
CHECKED BY: THOMAS	CREW CHIEF: AERNI
DATE: 04-02-2025 ASM	FIELD DATE: 02-26-2025

CUS UE CH BA
LINDSAY RD RELOCATE
SW 1/4, SECTION 20
T.2 S.,R.6 E.
9.5 SOUTH - 30.9 EAST

EXHIBIT "A"

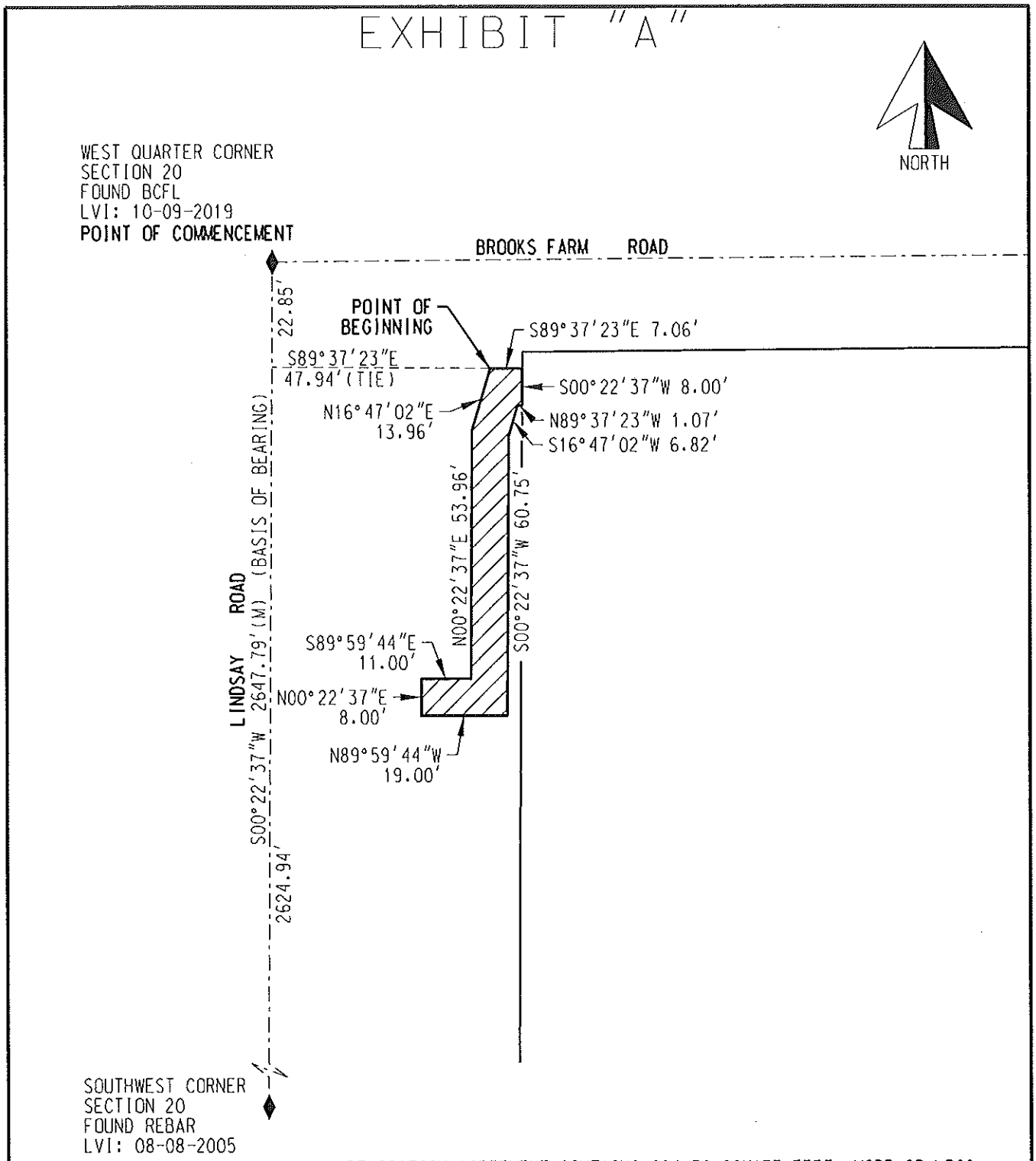

RELOCATION AGREEMENT CONTAINS 694.50 SQUARE FEET, MORE OR LESS.

SALT RIVER PROJECT AGRICULTURAL IMPROVEMENT & POWER DISTRICT		SURVEY DIVISION LAND DEPARTMENT
SRP LDWR NUMBER: N/A	SCALE: NTS	CUS UE CH BA LINDSAY RD RELOCATE SW 1/4, SECTION 20 T.2 S.,R.6 E. 9.5 SOUTH - 30.9 EAST
I.O. NUMBER: T3532068	SHEET: 3 OF 3	
AGENT: BALTRUS	SHEET SIZE: 8.5"x11"	
DRAWN: RUSSO	REVISION: 0	
CHECKED BY: THOMAS	CREW CHIEF: AERNI	
DATE: 04-02-2025 ASM	FIELD DATE: 02-26-2025	

CHANDLER arizona

ORDINANCE NO. 5135 GRANTING A NON-EXLUSIVE POWER DISTRIBUTION EASEMENT TO SALT RIVER PROJECT AGRICULTURAL IMPROVEMENT AND POWER DISTRICT (SRP), AT NO COST, FOR THE ELECTRICAL FACILITIES RELOCATION REQUIRED AS PART OF THE LINDSAY ROAD IMPROVEMENT PROJECT FROM OCOTILLO ROAD TO HUNT HIGHWAY

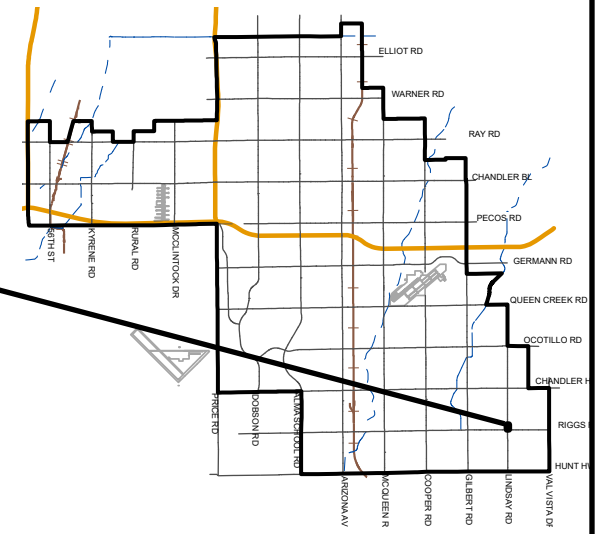

MATCH BELOW RIGHT

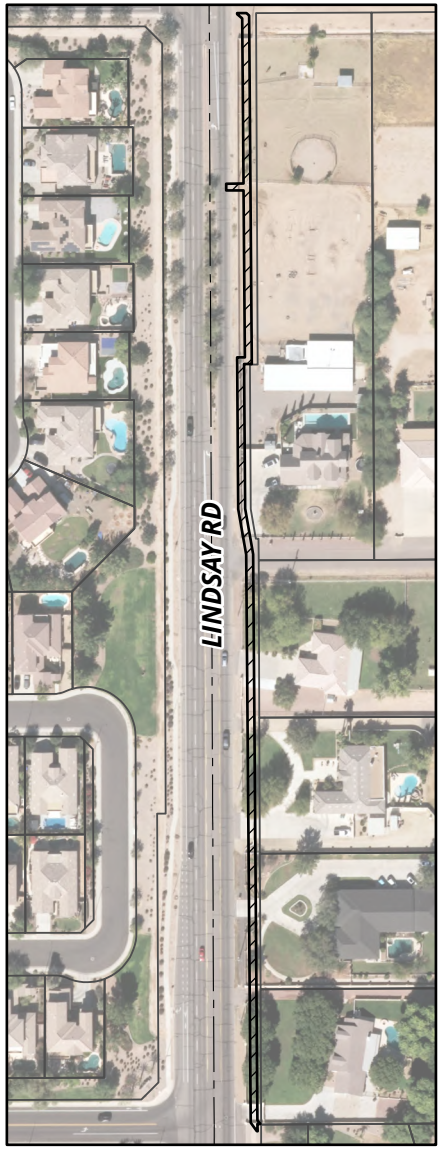

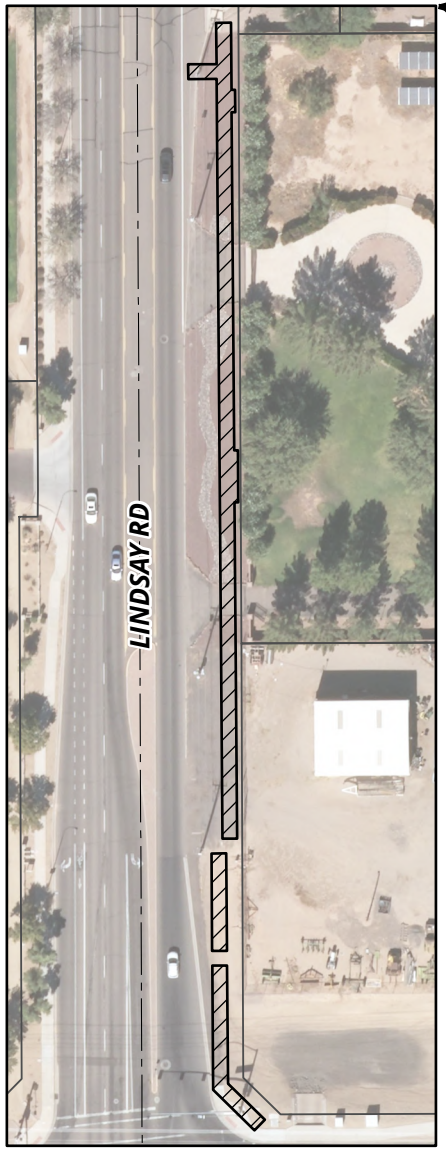

MATCH ABOVE LEFT

MEMO NO. RE26-022

SRP EASEMENT

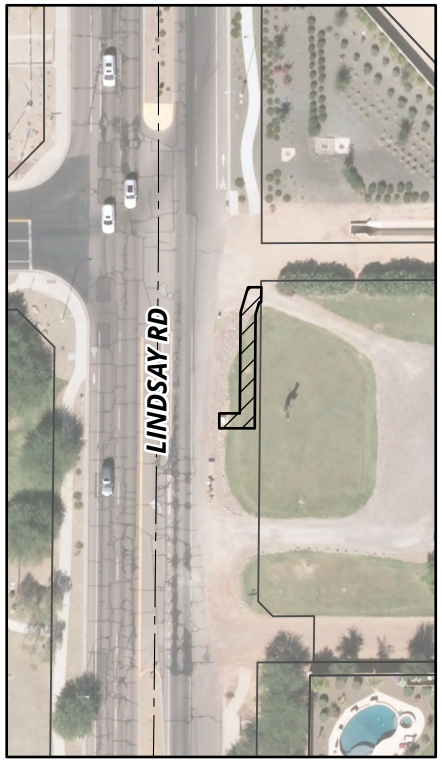

NTS

ChanGIS

F:\ENGINEER\GENSERV_ArcGISPro_Shared\Map Requests\Development Services\2025\SRP easement Request 25-07-1017\SRP easement Request 25-07-1017\SRP easement Request 25-07-1017.aprx 8/20/2025 CameronK

City Council Memorandum Public Works & Utilities Memo No. ST26-003

Date: September 15, 2025
To: Mayor and Council
Thru: John M. Pombier, Acting City Manager
Dawn Lang, Deputy City Manager/CFO
Jeremy Abbott, Acting Public Works and Utilities Director
From: John McFarland, Transportation Manager
Subject: Purchase of Streetlights, Signals, and Intelligent Transportation Systems (ITS) Components

---

Proposed Motion:

Move City Council approve the purchase of streetlights, signals, and ITS components, from CS Construction, Inc., utilizing Town of Gilbert Contract No. 323000238, in an amount not to exceed $460,000.

Background/Discussion:

The Transportation Division maintains 229 signalized intersections. In order to further optimize traffic signal operations, annual replacement and maintenance of signal components is necessary. A recent annual assessment identified 45 of the 229 signalized intersections have cracked insulation on the signal wiring. This purchase will rewire about 10 of these signalized intersections.

Evaluation:

The Town of Gilbert competitively solicited and awarded a contract for streetlights, signals, and ITS components to CS Construction, Inc. The city has a current agreement with the Town of Gilbert allowing for cooperative use of its contracts. Staff recommends the cooperative use of the contracts because of competitive pricing and the variety of services and equipment provided. The Town of Gilbert contract is valid through April 4, 2026.

Fiscal Impact

Account No.	Fund Name	Program Name	Dollar Amount	CIP Funded Y/N
411.3310.6516.0.6ST322	GO Bonds	Traffic Signal Improvement & Repair	$460,000	Y

City Council Memorandum **Public Works & Utilities** **Memo No.** RE26-003

Date: September 15, 2025
To: Mayor and Council
Thru: John M. Pombier, Acting City Manager
Dawn Lang, Deputy City Manager/CFO
Jeremy Abbott, Acting Public Works and Utilities Director
Daniel Haskins, Capital Projects Division Manager
From: Erich Kuntze, Real Estate Administrator
Subject: Resolution No. 5923 Authorizing the Acquisition of Real Property in Fee or by Easement Required for the Cooper Road and Insite Way Loop Improvement Project ST2303; Authorizing the City's Real Estate Administrator to Sign, on Behalf of the City, the Purchase Agreements and Any Other Documents Necessary to Facilitate the Acquisitions; Authorizing Eminent Domain Proceedings as Needed to Acquire Real Property Rights and Obtain Immediate Possession Thereof; and, Relocation Assistance as may be Required By Law

---

Proposed Motion:

Move City Council pass and adopt Resolution No. 5923 authorizing the acquisition of real property in fee or by easement required for the Cooper Road and Insite Way Improvement Project ST2303; authorizing the city's real estate administrator to sign, on behalf of the city, the purchase agreements, and any other documents necessary to facilitate these acquisitions; authorizing eminent domain proceedings as needed to acquire real property rights and obtain immediate possession thereof; and, relocation assistance as may be required by law.

Background:

The proposed improvements include a full-width roadway segment connecting Cooper Road, north of Queen Creek Road, to the Insight Way and Emmett Drive intersection, as well as half-street improvements on Emmett Drive south to Queen Creek Road. The roads will be improved to a collector street standard, including asphalt pavement, curb, gutter, sidewalk, streetlights, landscaping, and utility relocations. Utility relocation and undergrounding consists of 12.5 kilovolt lines

along Cooper Road and irrigation structures on both Cooper Road and Emmett Drive. Right-of-way and easement acquisitions will be required for the loop connection and east side of Emmett Drive. This project will also include a new southern entrance to the Chandler Airport for access to future development/hangars and realignment of Heliport Way for improved access and traffic safety.

Financial Implications:

Funds have been set aside in the project for acquisition and relocation services. Through the Resolution, Council authorizes the Public Works and Utilities Director to approve settlements above the appraised value of ten (10%) percent or up to $50,000 and the use of eminent domain only when needed, subject to approval at a separate Executive Session as described in Section 6. This is not required for properties in County jurisdiction.

Attachments

Resolution No. 5923

Location Map

RESOLUTION NO. 5923

A RESOLUTION OF THE CITY COUNCIL OF THE CITY OF CHANDLER, ARIZONA, AUTHORIZING THE ACQUISITION OF REAL PROPERTY IN FEE OR BY EASEMENT REQUIRED FOR THE COOPER ROAD AND INSIGHT WAY IMPROVEMENT PROJECT ST2303; AUTHORIZING THE CITY'S REAL ESTATE ADMINISTRATOR TO SIGN, ON BEHALF OF THE CITY, THE PURCHASE AGREEMENTS AND ANY OTHER DOCUMENTS NECESSARY TO FACILITATE THE ACQUISITIONS; AUTHORIZING EMINENT DOMAIN PROCEEDINGS AS NEEDED TO ACQUIRE REAL PROPERTY RIGHTS AND OBTAIN IMMEDIATE POSSESSION THEREOF; AND, RELOCATION ASSISTANCE AS MAY BE REQUIRED BY LAW.

WHEREAS, the City of Chandler is planning to improve Cooper Road north of Queen Creek Road, Insight Way west of Emmet Drive and Emmet Drive north of Queen Creek Road (the "Project") as depicted in Exhibit "A" attached hereto and made a part hereof, in order to improve service within the city and benefit the public; and

WHEREAS, to allow the Project to proceed and be constructed in accordance with its schedule, the City of Chandler needs to acquire real property rights in fee, by easement, or by access agreements along the alignment depicted in Exhibit "A"; and

WHEREAS, the City is authorized by law to acquire, whether by purchase or dedication such real property rights as are needed for public purposes; and

WHEREAS, the acquisition of some of the real property rights for the Project may result in the relocation of personal property.

NOW, THEREFORE, BE IT RESOLVED that the City Council of the City of Chandler, Arizona, as follows:

Section 1. Determines that the acquisition of real property rights by fee or by easement for the construction of the Coooper Road Insight Way Improvement Project ST2303 as depicted in Exhibit "A," is for a public and necessary purpose, and is in the best interest of the citizens of the City of Chandler.

Section 2. Authorizes and directs the City to purchase the real property rights in fee or by easement for an amount equal to the market value of the property right to be acquired as determined by appraisal, or as approved by the Public Works & Utilities Director at an amount not exceeding the appraisal by ten percent (10%) or up to $50,000. Written offers must be in a form approved by the Chandler City Attorney and each purchase agreement entered into with a property owner must be approved as to form by the Chandler City Attorney prior to being deposited into escrow.

Section 3. Subject to Section 2 above, authorizes the City's Real Estate Administrator, any city real estate officer acting on the Administrator's behalf, or any retained right-

of-way consultant acting at the direction of the Real Estate Administrator, to make written offers for the real property and, where accepted, to execute, deliver and deposit into escrow as required, the approved purchase agreements along with all other documents and instructions necessary to consummate the purchase of the real property.

Section 4. Where any such written offer is not accepted within a reasonable period of time for negotiation, authorizes and directs the Chandler City Attorney to commence condemnation (eminent domain) proceedings to acquire, in the name of the City of Chandler, the real property, including any improvements thereon, and to secure immediate possession of the real property, for the public purpose of constructing the Cooper Road and Insight Way Improvement Project ST2303, and further directs the Chandler City Attorney to do and to perform all acts necessary in furtherance of the acquisition of title to and immediate possession of the property.

Section 5. Authorizes the provision of such relocation assistance, including benefits, as may be required by law. The City's Real Estate Administrator will make the initial determination of any of any claim received for relocation benefits; any administrative appeal from such decision shall be considered and acted upon by and through the Real Estate Administrator or persons acting under the Administrator's direction or on the Administrator's behalf for such purpose, whose decision shall be final in accordance with applicable law.

Section 6. Directs that if City staff are unable to acquire any needed real property rights through voluntary sale by the property owner, the City Council will meet in executive session pursuant to ARS § 38-431.03 to discuss the matter prior to commencement of condemnation proceedings as described above. This provision does not apply to condemnation proceedings requested by the property owner or properties located outside the City's incorporated limits.

PASSED AND ADOPTED by the City Council this _____day of _____, 2025.

ATTEST:

_____ _____

CITY CLERK MAYOR

CERTIFICATION

I HEREBY CERTIFY that the above and foregoing Resolution No. 5923 was duly passed and adopted by the City Council of the City of Chandler, Arizona, at a regular meeting held on the _____ day of _____, 2025, and that a quorum was present thereat.

_____

CITY CLERK

APPROVED AS TO FORM:

_____

CITY ATTORNEY

DMG

CHANDLER arizona

AUTHORIZING THE ACQUISITION OF REAL PROPERTY IN FEE OR BY EASEMENT REQUIRED FOR THE COOPER ROAD AND INSIGHT WAY LOOP IMPROVEMENT PROJECT ST2303, AS SHOWN ON THE ATTACHED MAP, AUTHORIZING THE CITY'S REAL ESTATE ADMINISTRATOR TO SIGN, ON BEHALF OF THE CITY, THE PURCHASE AGREEMENTS, AND ANY OTHER DOCUMENTS NECESSARY TO FACILITATE THE ACQUISITIONS; AUTHORIZING EMINENT DOMAIN PROCEEDINGS AS NEEDED TO ACQUIRE SAID REAL PROPERTY AND OBTAIN IMMEDIATE POSSESSION THEREOF; AND, RELOCATION ASSISTANCE AS MAY BE REQUIRED BY LAW.

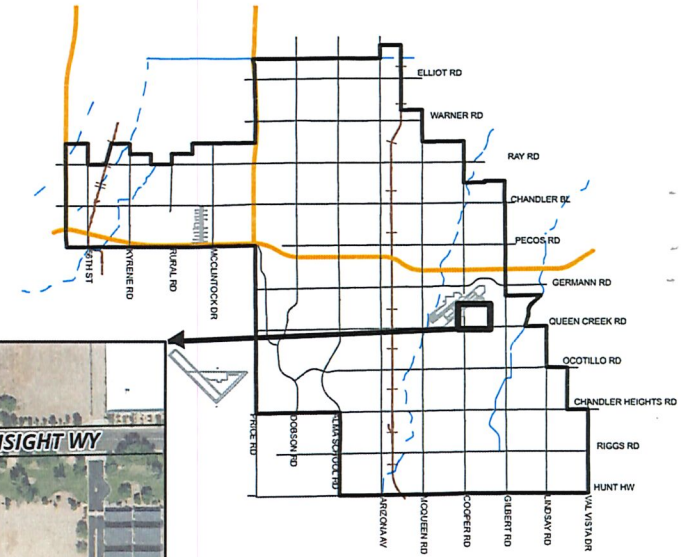

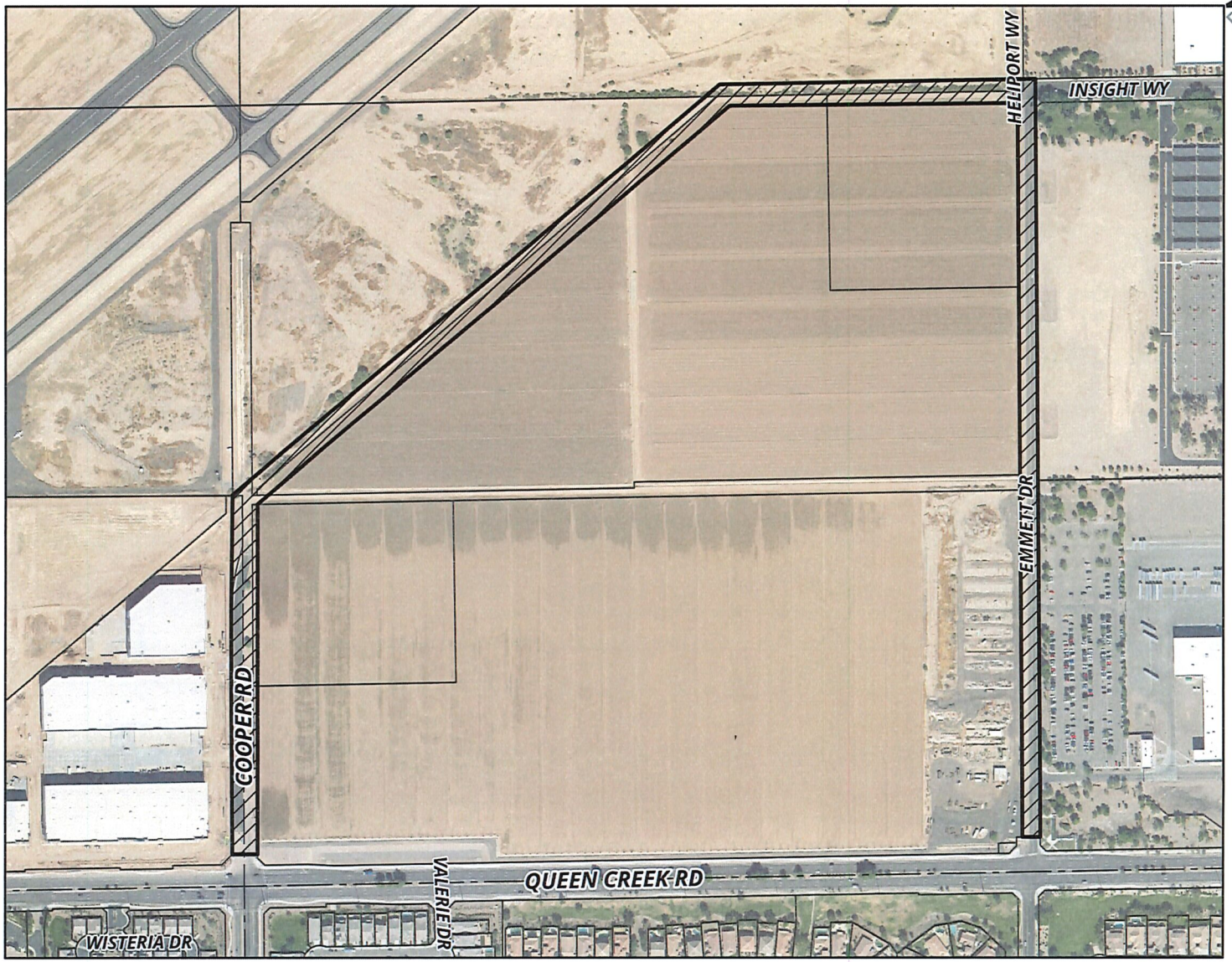

MEMO NO. RE26-003
RESOLUTION NO. 5923

PROJECT LOCATION

NTS
ChanGIS

F:\ENGINEER\GENSERV_ArcGISPro_Shared\Map Requests\Development Services\2025\RE26-003\RE26-003\RE26-003.aprx 7/23/2025 CameronK

CHANDLER arizona

AUTHORIZING THE ACQUISITION OF REAL PROPERTY IN FEE OR BY EASEMENT REQUIRED FOR THE COOPER ROAD AND INSIGHT WAY LOOP IMPROVEMENT PROJECT ST2303, AS SHOWN ON THE ATTACHED MAP, AUTHORIZING THE CITY'S REAL ESTATE ADMINISTRATOR TO SIGN, ON BEHALF OF THE CITY, THE PURCHASE AGREEMENTS, AND ANY OTHER DOCUMENTS NECESSARY TO FACILITATE THE ACQUISITIONS; AUTHORIZING EMINENT DOMAIN PROCEEDINGS AS NEEDED TO ACQUIRE SAID REAL PROPERTY AND OBTAIN IMMEDIATE POSSESSION THEREOF; AND, RELOCATION ASSISTANCE AS MAY BE REQUIRED BY LAW.

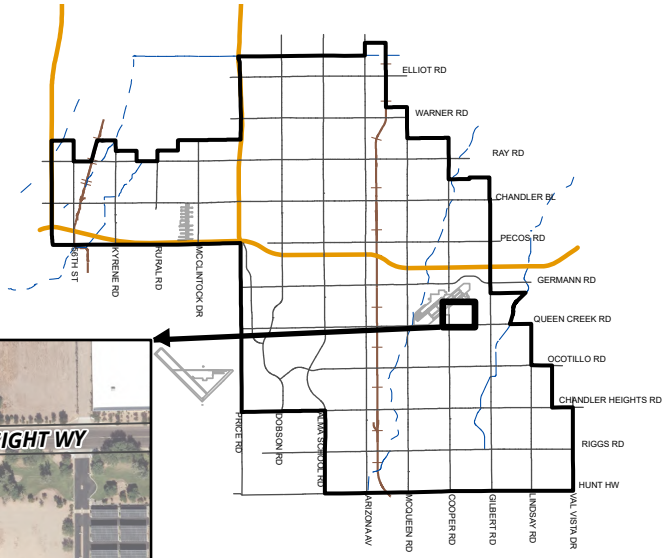

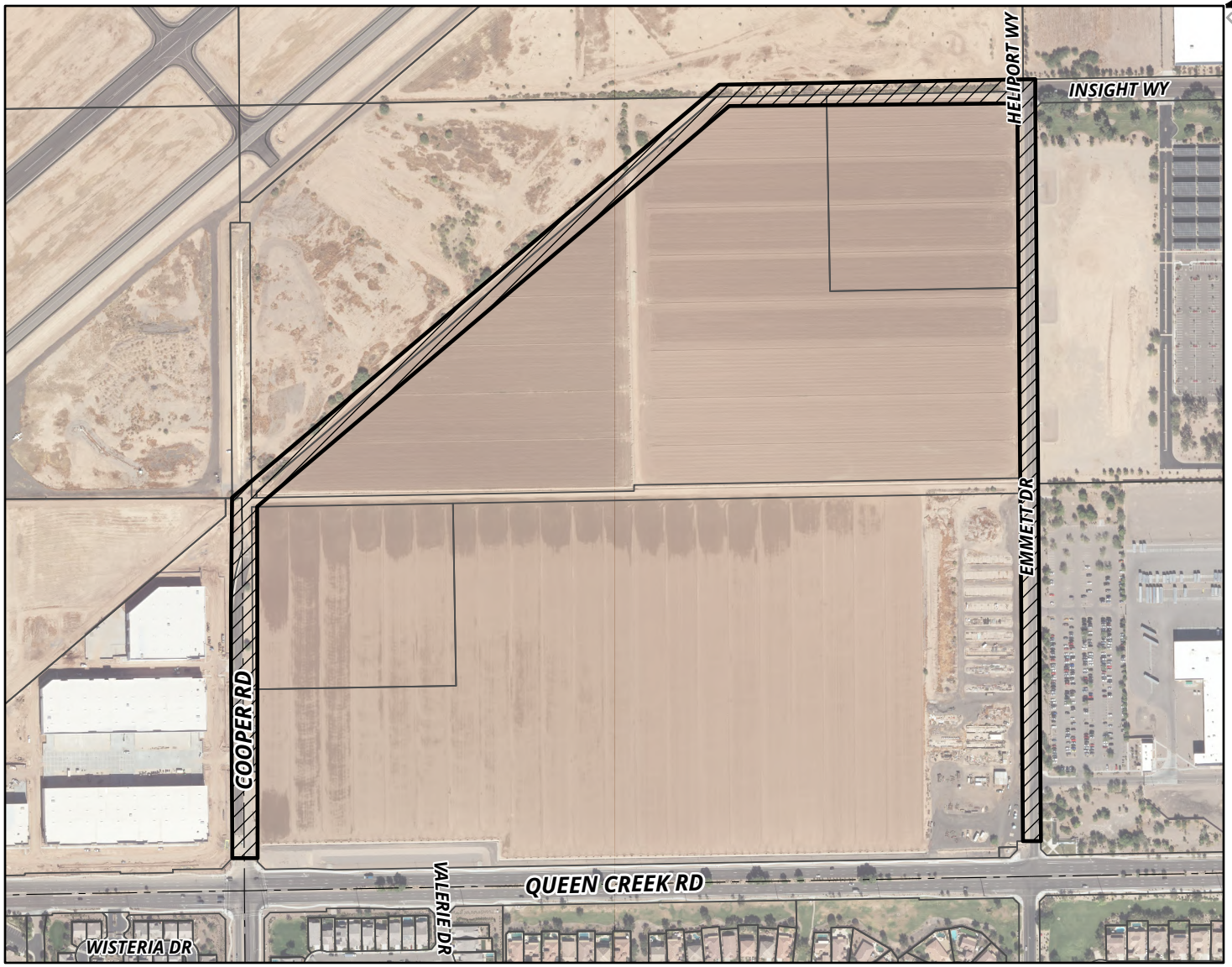

MEMO NO. RE26-003
RESOLUTION NO. 5923

PROJECT LOCATION

NTS

ChanGIS

F:\ENGINEER\GENSERV_ArcGISPro_Shared\Map Requests\Development Services\2025\RE26-003\RE26-003\RE26-003.aprx 7/23/2025 CameronK

City Council Memorandum **Public Works & Utilities** **Memo No.** RE26-004

Date: September 15, 2025

To: Mayor and Council

Thru: John M. Pombier, Acting City Manager
Dawn Lang, Deputy City Manager/CFO
Jeremy Abbott, Acting Public Works and Utilities Director
Daniel Haskins, Capital Projects Division Manager

From: Erich Kuntze, Real Estate Administrator

Subject: Resolution No. 5924 Authorizing the Acquisition of Real Property in Fee or by Easement Required for the Hamilton Street and Armstrong Way Improvement Project ST2301, Authorizing the City's Real Estate Administrator to Sign, on Behalf of the City, the Purchase Agreements, and Any Other Documents Necessary to Facilitate the Acquisitions; Authorizing Eminent Domain Proceedings as Needed to Acquire the Real Property and Obtain Immediate Possession Thereof; and, Relocation Assistance as May be Required By Law

---

Proposed Motion:

Move City Council pass and adopt Resolution No. 5924 authorizing the acquisition of real property in fee or by easement required for the Hamilton Street and Armstrong Way Improvement Project ST2301; authorizing the city's real estate administrator to sign, on behalf of the city, the purchase agreement, and any other documents necessary to facilitate these acquisitions; authorizing eminent domain proceedings as needed to acquire the real property and obtain immediate possession thereof; and, relocation assistance as may be required by law.

Background:

This project includes improving the south half of Armstrong Way from Hamilton Street to approximately 1,250 feet east (excluding development improvements made by the Midway project) to the city's current standards for a collector roadway. This project will also complete the half-street improvements on the west side of Hamilton Street from Armstrong Way to 420 feet north, including grading, streetlights, and roadway retention basins. The traffic signal and pedestrian curb ramps at the intersection of Hamilton Street and Germann Road

will be updated to add new pedestrian push buttons, crosswalk striping, signal heads, and signage to facilitate flashing yellow left-turn indications. These improvements will require the purchase of right-of-way, drainage easements, utility easements, and temporary construction easements throughout the project corridor.

Financial Implications:

Funds have been set aside in the project for acquisition and relocation services. Through the Resolution, Council authorizes the Public Works & Utilities Director to approve settlements above the appraised value of ten (10%) percent or up to $50,000 and the use of eminent domain when needed, subject to approval at a separate Executive Session as described in Section 6. This is not required for properties in County jurisdiction.

Attachments

Resolution No. 5924

Location Map

RESOLUTION NO. 5924

A RESOLUTION OF THE CITY COUNCIL OF THE CITY OF CHANDLER,ARIZONA, AUTHORIZING THE ACQUISITION OF REAL PROPERTY IN FEE OR BY EASEMENT REQUIRED FOR THE HAMILTON STREET AND ARMSTRONG WAY IMPROVEMENT PROJECT ST2301; AUTHORIZING THE CITY'S REAL ESTATE ADMINISTRATOR TO SIGN, ON BEHALF OF THE CITY, THE PURCHASE AGREEMENTS AND ANY OTHER DOCUMENTS NECESSARY TO FACILITATE THE ACQUISITIONS; AUTHORIZING EMINENT DOMAIN PROCEEDINGS AS NEEDED TO ACQUIRE THE REAL PROPERTY AND OBTAIN IMMEDIATE POSSESSION THEREOF; AND, RELOCATION ASSISTANCE AS MAY BE REQUIRED BY LAW.

WHEREAS, the City of Chandler is planning to improve Hamilton Street and Armstrong Way north of Queen Creek Road in the area depicted in Exhibit "A" attached hereto and made a part hereof (the "Project") in order to improve service within the city and to be a benefit to the public; and

WHEREAS, in order to allow the Project to proceed and be constructed in accordance with its schedule, the City of Chandler needs to acquire real property rights in fee or by easement along the alignment depicted in the attached aerial map; and

WHEREAS, the City is authorized by law to acquire, whether by purchase or dedication such real property rights as are needed for public purposes; and

WHEREAS, the acquisition of some of the real property rights for the Project may result in the relocation of personal property.

NOW, THEREFORE, BE IT RESOLVED that the City Council of the City of Chandler, Arizona, as follows:

Section 1. Determines that the acquisition of real property rights by fee or by easement for the Hamilton Street and Armstrong Way Improvement Project ST2301 as depicted in Exhibit "A" is for a public and necessary purpose, and is in the best interest of the citizens of the City of Chandler.

Section 2. Authorizes and directs the City to purchase the real property rights in fee or by easement for an amount equal to the market value to be acquired as determined by appraisal, or as approved by the Public Works & Utilities Director at an amount not exceeding the appraisal by ten percent (10%) or up to $50,000. Written offers must be in a form approved by the Chandler City Attorney and each purchase agreement entered into with a property owner must be approved as to form by the Chandler City Attorney prior to being deposited into escrow.

Section 3. Subject to Section 2 above, authorizes the City's Real Estate Administrator, any city real estate officer acting on the Administrator's behalf, or any retained right-of-way consultant acting at the direction of the Real Estate Administrator to make written offers for said real property and, where accepted, to execute, deliver and deposit into escrow as required, the approved purchase agreements along with all other documents and instructions necessary to consummate the purchase of the real property.

Section 4. Where any such written offer is not accepted within a reasonable period of time for negotiation, authorizes and directs the Chandler City Attorney to commence condemnation (eminent domain) proceedings to acquire, in the name of the City of Chandler, said real property, including any improvements thereon, and to secure immediate possession of such real property, for the public purpose of constructing the Hamilton Street and Armstrong Way Improvement Project ST2301, and further directs staff to do and to perform all acts necessary in furtherance of the acquisition of title to and immediate possession of said real property.

Section 5. Authorizes the provision of relocation assistance, including benefits, as may be required by law. The City's Real Estate Administrator will make the initial determination of any claim received for relocation benefits; any administrative appeal from such decision will be considered and acted upon by and through the Real Estate Administrator or persons acting under the Administrator's direction or on the Administrator's behalf for such purpose, whose decision is final in accordance with applicable law.

Section 6. Directs that if City staff are unable to acquire any needed real property rights through voluntary sale by the property owner, the City Council will meet in executive session pursuant to ARS § 38-431.03 to discuss the matter prior to commencement of condemnation proceedings as described above. This provision does not apply to condemnation proceedings requested by the property owner or properties located outside the City's incorporated limits.

PASSED AND ADOPTED by the City Council this _____day of _____, 2025.

ATTEST:

_____ _____

CITY CLERK MAYOR

CERTIFICATION

I HEREBY CERTIFY that the above and foregoing Resolution No. 5924 was duly passed and adopted by the City Council of the City of Chandler, Arizona, at a regular meeting held on the _____ day of _____, 2025, and that a quorum was present thereat.

_____

CITY CLERK

APPROVED AS TO FORM:

_____

CITY ATTORNEY

DMG

EXHIBIT "A"

CHANDLER arizona

AUTHORIZING THE ACQUISITION OF REAL PROPERTY IN FEE OR BY EASEMENT REQUIRED FOR THE HAMILTON STREET AND ARMSTRONG WAY IMPROVEMENT PROJECT ST2301, AS SHOWN ON THE ATTACHED MAP, AUTHORIZING THE CITY'S REAL ESTATE ADMINISTRATOR TO SIGN, ON BEHALF OF THE CITY, THE PURCHASE AGREEMENTS, AND ANY OTHER DOCUMENTS NECESSARY TO FACILITATE THE ACQUISITIONS; AUTHORIZING EMINENT DOMAIN PROCEEDINGS AS NEEDED TO ACQUIRE SAID REAL PROPERTY AND OBTAIN IMMEDIATE POSSESSION THEREOF; AND, RELOCATION ASSISTANCE AS MAY BE REQUIRED BY LAW

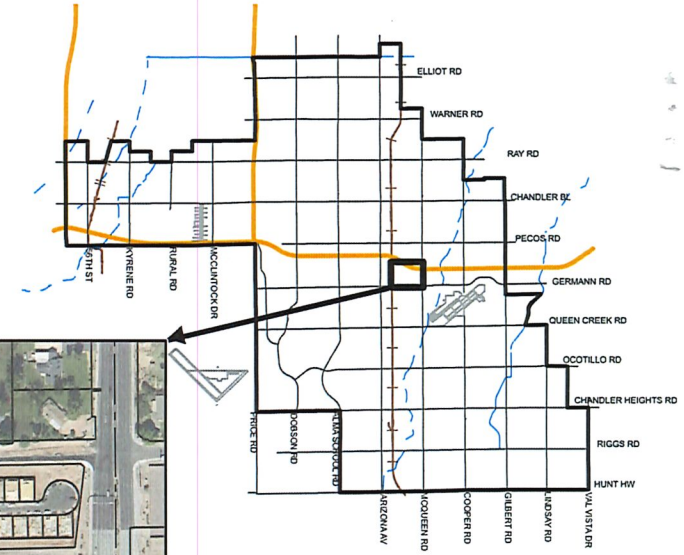

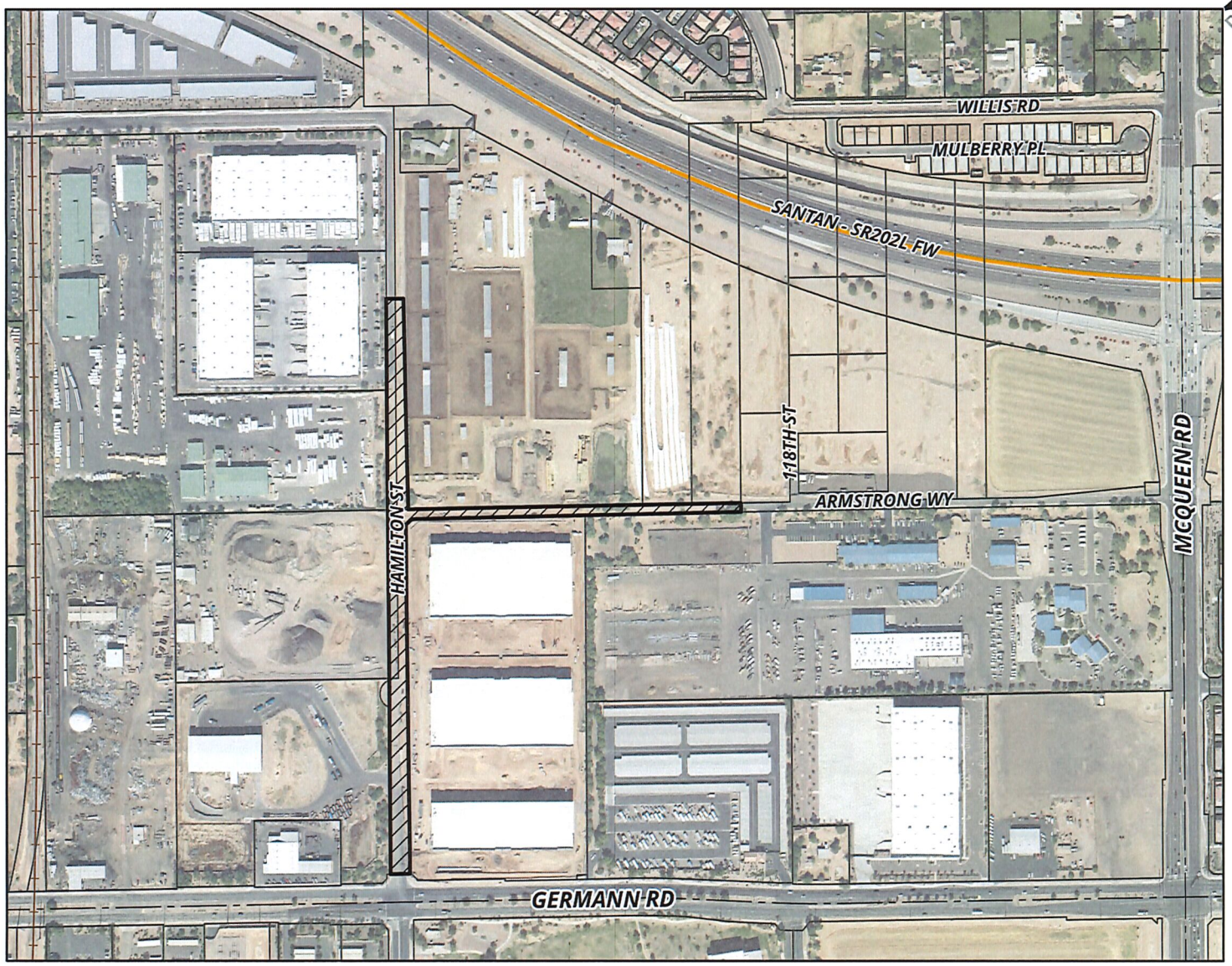

MEMO NO. RE26-004
RESOLUTION NO. 5924

PROJECT LOCATION

NTS

ChanGIS

F:\ENGINEER\GENSER_ArcGISPro_Shared\Map Requests\Real Estate\2026\RE26-004\RE26-004\RE26-004.aprx 7/24/2025 CameronK

CHANDLER arizona

AUTHORIZING THE ACQUISITION OF REAL PROPERTY IN FEE OR BY EASEMENT REQUIRED FOR THE HAMILTON STREET AND ARMSTRONG WAY IMPROVEMENT PROJECT ST2301, AS SHOWN ON THE ATTACHED MAP, AUTHORIZING THE CITY'S REAL ESTATE ADMINISTRATOR TO SIGN, ON BEHALF OF THE CITY, THE PURCHASE AGREEMENTS, AND ANY OTHER DOCUMENTS NECESSARY TO FACILITATE THE ACQUISITIONS; AUTHORIZING EMINENT DOMAIN PROCEEDINGS AS NEEDED TO ACQUIRE SAID REAL PROPERTY AND OBTAIN IMMEDIATE POSSESSION THEREOF; AND, RELOCATION ASSISTANCE AS MAY BE REQUIRED BY LAW

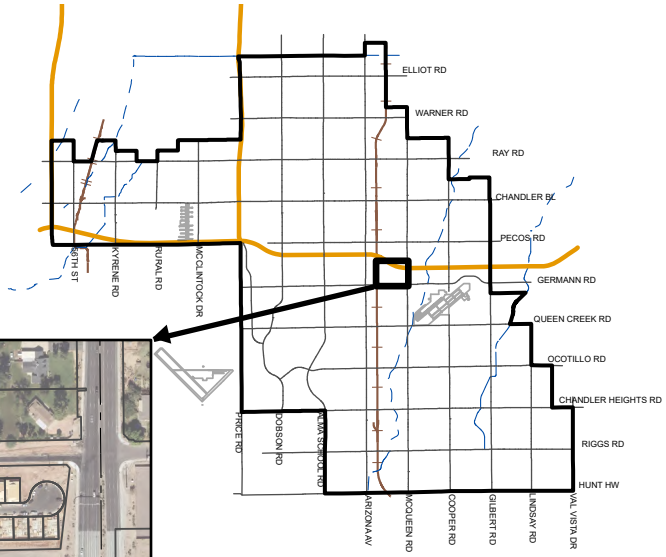

MEMO NO. RE26-004
RESOLUTION NO. 5924

PROJECT LOCATION

NTS

ChanGIS

F:\ENGINEER\GENSERV_ArcGISPro_Shared\Map Requests\Real Estate\2026\RE26-004\RE26-004\RE26-004.aprx 7/24/2025 CameronK

City Council Memorandum Public Works & Utilities Memo No. CP26-026

Date: September 15, 2025
To: Mayor and Council
Thru: John M. Pombier, Acting City Manager
Dawn Lang, Deputy City Manager/CFO
Jeremy Abbott, Acting Public Works and Utilities Director
Daniel Haskins, Capital Projects Division Manager

From: Sandra Story, Engineering Project Manager
Subject: Professional Services Agreement No. WW2206.451, Amendment No. 3, with Wilson Engineers, LLC, for the Reclaimed Water Conveyance Improvements Construction Management Services

---

Proposed Motion:

Move City Council award Professional Services Agreement No. WW2206.451, Amendment No. 3, to Wilson Engineers, LLC, for the Reclaimed Water Conveyance Improvements Construction Management Services, in the amount of $137,620, for a revised agreement amount not to exceed $1,656,390.

Background/Discussion:

In October 2021, the city executed a reclaimed water agreement with Intel Corporation for additional reclaimed water supply. The city intends to convey the additional reclaimed water from the Airport Water Reclamation Facility (AWRF), located at 905 E. Queen Creek Road, to the Ocotillo area. This approach requires utilization of existing infrastructure and installation of additional off-site pipeline within the city's rights of way. Additionally, improvements at the city's water reclamation facilities will be required, as well as the installation of Aquifer Storage and Recovery (ASR) Wells to recharge and recover water.

Amendment No. 3 is for construction management, project administration, and resident engineer services for the early procurement of the long lead items required to facilitate the construction of two ASR wells. The long lead items will include critical electrical equipment such as service entrance section,

switchboards, motor control centers, valves, actuators, variable frequency drives, and pumps. An additional 545 calendar days have been added for a revised total of 1,316 calendar days to final completion, following the Notice to Proceed.

A related Construction Change Order with PCL Construction, Inc., for the Reclaimed Water Conveyance Improvements, is also scheduled for this City Council meeting.

Evaluation:

The selection process was conducted in accordance with city policy and procedure and state law for professional services. On June 29, 2023, the City Council awarded Professional Services Agreement No. WW2206.451, to Wilson Engineers, LLC, for the Reclaimed Water Conveyance Improvements. Staff reviewed the scope of work, billing rates, and total fee for the project and determined them to be reasonable.

Financial Implications:

The cost of this project will be reimbursed by Intel Corporation (20%), using funding provided for public infrastructure in their development agreement with the City of Chandler. The remaining 80% of the project cost will utilize State of Arizona Title 42 funding for public infrastructure per the city's October 2021 Reclaimed Water Agreement with Intel Corporation.

Fiscal Impact

Account No.	Fund Name	Program Name	Dollar Amount	CIP Funded Y/N
615.3910.6814.0000.6WW690	Wastewater Operating	Reclaimed Water Conveyance	$137,620	Y

Attachments

Agreement - Wilson Engineers, LLC

Amendment Location Map

Docusign Envelope ID: 6A2E7FC3-0BE9-4627-B1DF-BA94C73398AB

AMENDMENT NO. 3 TO
CONSTRUCTION MANAGEMENT SERVICES AGREEMENT

RECLAIMED WATER CONVEYANCE IMPROVEMENTS
PROJECT NO. WW2206.451

Council Date: September 18, 2025

THIS AMENDMENT NO. 3 ("Amendment No. 3**"**) to the professional services agreement dated July 10, 2023, (the "Agreement") is made by and between the City of Chandler, an Arizona municipal corporation, ("City") and Wilson Engineers LLC, an Arizona limited liability company, ("Consultant"), on this _____ day of _____, 2025, ("Effective Date" by Clerk). (City and Consultant may individually be referred to as "Party" and collectively referred to as "Parties").

RECITALS

A. The Parties entered into the Agreement for Construction Management Services ("Services") for the Reclaimed Water Conveyance Improvements project.

B. The Parties have determined that it is necessary and desirable for the Consultant to perform services for the City under the terms and conditions set forth in this Amendment No. 3 and the Agreement.

AGREEMENT

NOW, THEREFORE, in consideration of the premises and mutual promises contained in the Agreement and this Amendment No. 3, the Parties agree to amend and modify the Agreement as follows.

SECTION I – CONSULTANT'S SERVICES

The Consultant's Services are modified as described in the Exhibit "A" attached to and made part of this amendment by reference.

SECTION II – PERIOD OF SERVICE

The Period of Service is increased by 545 calendar days for a revised total of 1,316 calendar days.

Docusign Envelope ID: 6A2E7FC3-0BE9-4627-B1DF-BA94C73398AB

SECTION III – PAYMENT OF COMPENSATION AND FEES

The Fees are increased by $137,620 and will be payable in accordance with Exhibit "B" attached to and made part of this amendment by reference, for a revised total not to exceed $1,656,390.

SECTION IV – CONFLICT AMONG DOCUMENTS

The Agreement, this Amendment No. 3, and any previous amendments constitute the complete agreement between the Parties concerning the subject matter of the Agreement and replace any prior oral or written communications between the Parties. If a conflict or ambiguity arises between the Agreement and this Amendment 3, the instrument in the following order prevails and controls: (1) this Amendment 3; (2) any previous amendments from most recent to oldest; and (3) the Agreement.

SIGNATURE PAGE TO FOLLOW

Docusign Envelope ID: 6A2E7FC3-0BE9-4627-B1DF-BA94C73398AB

IN WITNESS WHEREOF, the Parties hereto have caused this Amendment No. 3 to be duly executed. Each Party warrants and represents that its respective signatories whose signatures appear below have been and are on the date of signature duly authorized to execute this Amendment No. 3.

"CITY"
CITY OF CHANDLER

Mayor

RECOMMENDED BY:

Daniel Haskins August 26, 2025
Daniel Haskins, P.E.
CIP City Engineer

APPROVED AS TO FORM:

City Attorney JMB

ATTEST:

City Clerk Seal

"CONSULTANT"
WILSON ENGINEERS LLC

Uday Kumar Gandhe August 26, 2025
Signature Date

Uday Kumar Gandhe
Print Name

Principal
Title

uday.gandhe@wilson-engineers.com
Signer Email Address

AMENDMENT NO. 3 (cont.)
PROJECT: RECLAIMED WATER CONVEYANCE IMPROVEMENTS
PROJECT NO.: WW2206.451

These changes result in the following adjustments of Agreement amount and/or time:

Amendment authorized by Owner name: **Daniel Haskins** **Date:** **8/25/2025**		
Consultant Contact Name: **Uday Kumar Gandhe** **email:** **uday.gandhe@wilson-engineers.com**		
Original Agreement amount:	**$202,450**	
Previous Amendment(s) total:	**$1,316,320**	
Last Agreement amount approved by Council:	**$1,518,770**	
This Amendment:	**$137,620**	
This Amendment + previous Amendment(s) **not** approved by Council total:	**137,6200**	
Revised Agreement total:	**$1,656,390**	
Council Approval Required (yes indicates approval required)	**Yes**	**No**
Amendment(s) total over $100,000:	☒	☐
Amendment(s) total causes Agreement to exceed $100,000:	☒	☐
Agreement Time		
Notice to Proceed (NTP) date for Original Agreement:	**8/31/2023**	
Agreement time prior to this Amendment (including previous amendments):	**771** **Calendar Days**	
Net change resulting from this Amendment:	**545** **Calendar Days**	
Revised Agreement time (including this Amendment):	**1,316** **Calendar Days**	
Council Approval (if applicable)		
Council Approval Date: **9/18/2025**		

cc: Project Manager, Consultant, Owner, File

Docusign Envelope ID: 6A2E7FC3-0BE9-4627-B1DF-BA94C73398AB

EXHIBIT A
SCOPE OF WORK

Docusign Envelope ID: 6A2E7FC3-0BE9-4627-B1DF-BA94C73398AB

EXHIBIT "A"

CONSTRUCTION MANAGEMENT
SCOPE OF SERVICES
RECLAIMED WATER CONVEYANCE IMPROVEMENTS

GENERAL DESCRIPTION

The CITY initiated the Reclaimed Water Conveyance Improvements project in order to complete the conveyance upgrades and the construction of Tumbleweed Recharge Facility Wells No. 11 and 12. The design of the project is currently underway. The early procurement of the long lead items would facilitate timely construction work. The long lead items will include critical electrical equipment such as SES, switchboards, MCCs, valves, actuators, VFDs and pumps. The early procurement items will allow the contractor to purchase equipment in time for installation. This Construction Management scope of work will include effort by Wilson Engineers (Consultant) and will involve Project Administration, Engineering and Resident Services during this phase (GMP 3) of the Project.

PROJECT TASKS

1. PRE-CONSTRUCTION ASSISTANCE

A. Task 1.1 Preconstruction Assistance

i. CONSULTANT will conduct a pre-construction conference. At the conference, the CONSULTANT will identify the services to be provided by CONSULTANT and discuss coordination procedures. CONSULTANT will prepare an agenda for this meeting and will prepare and distribute the meeting minutes.

2. CONSTRUCTION MANAGEMENT

A. Task 2.1 Weekly Construction Meetings

i. CONSULTANT must conduct weekly construction meetings. Each meeting includes agenda and minutes; Request for Information (RFI); Shop Drawing; Request for Proposals (RF); Field Directive (FD); Material Certification; and Allowance Logs. CONSULTANT assumes ten meetings (on an as needed basis) will be held. These meetings will be to discuss the project's long lead procurement items and any schedule related discussions.

B. Task 2.2 CPM Schedule

i. CONSULTANT's opinions concerning various scheduling documents produced or used by the Contractor are for information and not for controlling the Contractor. It is Contractor's responsibility to continue to exercise independent judgement concerning means, methods and sequences of construction it employs. The Contractor remains solely responsible for meeting contract time(s) identified in the construction documents.

ii. Review Progress Schedule: CONSULTANT will review and critique the Contractor's progress schedule in accordance with the construction documents. CONSULTANT will examine work sequence, durations, interim milestones, and other appropriate scheduling features in accordance with the requirements of the construction documents. CONSULTANT will prepare a summary of the baseline schedule review comments and will meet and discuss

Docusign Envelope ID: 6A2E7FC3-0BE9-4627-B1DF-BA94C73398AB

the schedule comments with the Contractor and the CITY. CONSULTANT will provide recommendations for acceptance.

iii. Review Progress schedule updates: CONSULTANT will review the Contractor's progress schedule updates to the construction schedule in accordance with the construction documents. CONSULTANT will perform a review of progress accomplished during the period and compare to planned schedule and discuss significant discrepancies with the Contractor. CONSULTANT and Contractor will establish, based on the data, the percent of Project completion. CONSULTANT will meet with Contractor on monthly basis to review and update the schedule data. Based upon the schedule update, CONSULTANT will recommend processing progress payments. The CONSULTANT will identify CPM tasks behind schedule that may affect critical path items, project's substantial and final completion dates and initiate correspondence to CITY regarding those tasks. CONSULTANT assumes two reviews of updated CPM schedule.

C. Task 2.3 Requests for Information (RFI's)

i. CONSULTANT will issue necessary interpretations and clarifications of the construction documents; have authority, as CITY's representative, to require special inspection or testing of the work; act as initial interpreter of the requirements of the construction documents and judge the acceptability of the work thereunder, and make decisions on all claims of CITY and Contractor(s) relating to the acceptability of the work or the interpretation of the requirements of the construction documents pertaining to the execution and progress of the work. CONSULTANT will render interpretations or decisions in good faith and in accordance with the requirements of the construction documents.

ii. CONSULTANT will respond to the CITY's representative and/or Contractor to clarify and/or interpret technical or design-related questions. CONSULTANT will respond to issues raised during construction regarding interpretation and clarification of the contractual administrative and technical requirements of the construction documents. CONSULTANT will serve as the CITY's advisor in resolution of these issues.

iii. CONSULTANT will prepare and maintain a submittal log of all RFI's. CONSULTANT assumes a maximum of 25 RFI responses.

D. Task 2.4 Shop Drawing Submittals

i. CONSULTANT will receive, review, evaluate, and distribute (or take other appropriate action in respect of) shop drawings, samples, test results, and other data which Contractor is required to submit. CONSULTANT review shall be for conformance with the design concept of the Project and compliance with the information given in the construction documents. Such review or other action shall not extend to means, methods, sequences, techniques, or procedures of construction selected by Contractor(s), or to safety precautions and programs associated thereto. CONSULTANT will receive and review (for general contents as required by the construction documents) maintenance and operating schedules and instructions, operation and maintenance manuals, guarantees, and certificates of inspection, which are to be assembled by Contractor(s) in accordance with the construction documents.

ii. CONSULTANT will maintain a submittal log showing dates of submittal, transmittal action to other sub-consultants, dates of return, and review action. Copies of the log shall be furnished to the CITY and the Contractor weekly. CONSULTANT will promptly and in accordance with Project schedule requirements, review and approve, reject or take other appropriate action on the Contractor's request for substitutions. CONSULTANT will not approve any proposed substitution unless such substitution conforms to the Project design concept and the construction documents including the contract price.

iii. Task effort is based on receiving an estimated total of 20 shop drawing submittals. Submittal review efforts are based upon a maximum of two (2)

Docusign Envelope ID: 6A2E7FC3-0BE9-4627-B1DF-BA94C73398AB

reviews per submittal and that no more than fifty percent (50%) of the total number of first submittals will require two (2) reviews.

E. Task 2.5 Requests for Proposal (RFP)

i. CONSULTANT must prepare Requests for Proposal (RFP) documents detailing requested additional work tasks; review and evaluate Contractor RFP responses (cost deviations) with approval recommendations; and prepare and maintain a submittal log list of all RFP's. CONSULTANT assumes two (2) RFPs.

F. Task 2.6 Field Directives (FD's)

i. CONSULTANT, without the CITY's prior approval, may authorize or direct minor changes in the Work which are consistent with the intent of the construction contract documents and which do not involve a change in Project cost, time for construction, Project scope, aesthetics, or approved design elements. Any such minor changes shall be implemented by written field order. Except as provided in this paragraph, CONSULTANT shall not have authority to direct or authorize changes in the Work without the CITY's prior written approval; however, CONSULTANT shall provide a copy of any written field order to the CITY.

ii. CONSULTANT will prepare and submit change order requests explaining the merits for the change and a recommendation for the CITY's approval and acceptance.

iii. CONSULTANT will negotiate an agreement with the Contractor as to scope of work and cost, time or both associated with the change in Work. The change order shall include a written justification for the cost of the Work. CONSULTANT will administer and manage minor changes, change order requests, and change orders on behalf of the CITY. Change orders shall be prepared on a standard form provided by the CITY. Should a change order request be accepted by the CITY in the absence of an agreement with the Contractor as to cost, time, or both, CONSULTANT will:

A) receive and maintain all documentation pertaining to the change order request required of the Contractor;

B) examine such documentation on the CITY's behalf;

C) take such other action as may be reasonably necessary or as the CITY may request; and

D) make a recommendation to the CITY concerning any appropriate adjustment in the construction cost and/or time, and prepare a change order for Contractor's acceptance and CITY approval.

iv. Changes and substitutions shall be limited to the scope of the Project as defined by the construction documents or additional work as may be requested by the CITY. CONSULTANT will promptly consult with and advise the CITY concerning, and shall administer and manage, all change order requests and change orders.

v. CONSULTANT will prepare, when requested by the CITY, required drawings, specifications and other supporting data regarding minor changes, change order requests, and change orders. CONSULTANT must prepare Field Directive (FD) documents detailing requested additional work tasks; review and evaluate Contractor FD responses with approval recommendations; and prepare and maintain a submittal log list of all FD's. CONSULTANT assumes two (2) FD's.

G. Task 2.7 Contractor Payment Applications

i. CONSULTANT will review, prepare comments, and reach agreement with the Contractor on the progress represented in the Contractor's schedule of values. The monthly schedule update, schedule of values, in combination with CONSULTANT's field inspections, and the progress schedule shall be used by

Docusign Envelope ID: 6A2E7FC3-0BE9-4627-B1DF-BA94C73398AB

CONSULTANT to determine the appropriateness of the Contractor's request for payment.

ii. CONSULTANT, as an experienced and qualified professional, and on review of applications for payment and the accompanying data and schedules, determine the amounts owed to Contractor and recommend in writing, payments to Contractor in such amounts; such recommendations of payment will constitute a representation to CITY, based on such inspections and review, that;

A) the work has progressed to the point indicated;

B) to the best of CONSULTANT's knowledge, information and belief, the quality of such work is in accordance with the construction documents (subject to an evaluation of such work as a functioning Project upon Substantial Completion, to the results of any subsequent tests called for in the construction documents, and to any qualifications stated in the recommendation); and

C) payment of the amount recommended is due and owed to the Contractor.

iii. For unit price work, CONSULTANT's recommendations for payment will be a determination of completed quantities of such work.

iv. Consultant assumes a maximum of 6 payment applications, with 2 reviews each.

H. Task 2.8 Public Outreach

i. Not Included

3. CONSTRUCTION INSPECTION

A. Task 3.1 Inspection Services

i. Construction Inspection is not anticipated at this time.

B. Task 3.2 Landscape / Irrigation Inspection Services

i. Not Included

C. Task 3.3 Project Closeout

i. Not Included

4. UTILITY COORDINATION

A. Task 4.1 Utility Coordination

i. Not Included

5. MATERIALS TESTING

A. Task 5.1 Quality Control (QC) Test Program

i. Not Included

B. Task 5.2 Quality Assurance (QA) Test Program

i. Not Included

6. RECORD DRAWINGS

A. **Task 6.1 Record Drawings**

i. Not Included

Docusign Envelope ID: 6A2E7FC3-0BE9-4627-B1DF-BA94C73398AB

ASSUMPTION, CLARIFICATIONS, AND EXCLUSIONS

1. Application fees for CITY reviews and permits will be paid by CITY.
2. The Owner's Allowance will only be utilized with prior written approval from the CITY representative.

Docusign Envelope ID: 6A2E7FC3-0BE9-4627-B1DF-BA94C73398AB

EXHIBIT B
FEE SCHEDULE

Docusign Envelope ID: 6A2E7FC3-0BE9-4627-B1DF-BA94C73398AB

EXHIBIT "B"
CONSTRUCTION MANAGEMENT
SCOPE OF SERVICES
FEE SCHEDULE

Task	Description	Cost
1	**PRE-CONSTRUCTION ASSISTANCE**	
1.1	Pre-Construction Assistance	$ 5,568.00
	SUBTOTAL TASK 1:	**$ 5,568.00**
2	**CONSTRUCTION MANAGEMENT**	
2.1	Weekly Construction Meetings	$ 13,568.00
2.2	CPM Schedule	$ 8,844.00
2.3	Perform Site Visits	$ -
2.4	Requests for Information (RFI)	$ 24,890.00
2.5	Shop Drawing Submittals	$ 44,738.00
2.6	Requests for Proposal (RFP)	$ 7,470.00
2.7	Field Directive (FD)	$ 9,438.00
2.8	Contractor Payment Applications	$ 8,104.00
2.9	Public Outreach	$ -
	SUBTOTAL TASK 2:	**$ 117,052.00**
3	**CONSTRUCTION INSPECTION**	
3.1	Inspection Services	$ -
3.2	Landscape/Irrigation Inspection Services (IF APPLICABLE)	$ -
3.3	Project Closeout	$ -
	SUBTOTAL TASK 3:	**$ -**
4	**UTILITY COORDINATION**	
4.1	Utility Coordination	$ -
	SUBTOTAL TASK 4:	**$ -**
5	**MATERIALS TESTING**	
5.1	QC Test Program	$ -
5.2	QA Test Program	$ -
	SUBTOTAL TASK 5:	**$ -**
6	**RECORD DRAWINGS**	
6.1	Record Drawings	$ -
	SUBTOTAL TASK 6:	**$ -**
ALLOWANCES		
	SUBTOTAL ALLOWANCES:	**$ -**
SUBCONSULTANTS		
	SUBTOTAL SUBCONSULTANTS:	**$ -**
OWNER'S ALLOWANCE		
Direct Expense Allowance		
Owner's Allowance		$ 15,000.00
	OWNER'S ALLOWANCE	**$ 15,000.00**
	PROJECT TOTAL:	**$ 137,620.00**

Docusign Envelope ID: 6A2E7FC3-0BE9-4627-B1DF-BA94C73398AB

WILSON ENGINEERS

EXHIBIT "B-2"
Hours and Rates

	Principal	Sr. PM	Sr. PM (E/I&C, Str., Process)	Const. PM	Sr. Engr./RPR	Project Engineer / Prof	Lead Const. Inspector	Sr Elec. Inspector / Designer	Senior CADD Tech	Senior Admin	< PROJECT ROLE	
	Uday Gandhe	*Sreeram Rengaraj, Craig Ramsey*	*Damien Tonnelle, Scott Lorentzen, Jaco Kruger, Larry Kiser, Chris Yarn*	*Dave Corrie, Jeff Johannes*	*Kileigh Phillips, Vineet Awasthi, Sydney Adamonis, Daniel Hickey*	*Muthu Kathiresan, Jot Sandhu, Yago Freire, Channing Allen, Sai Chilakalapudi, Minhee Park*	*Kristen Reidhead, Martin Villanueva, Paul Cooper*	*Jason Gilley, Carlos Alvarez*	*Kam Casey, Amber Andrade, Timbrlee Smith*	*Brandy Nixon, Amiee Dunneback*	*< NAME OF PERSON*	
	$ 293.00	$ 293.00	$ 254.00	$ 225.00	$ 215.00	$ 174.00	$ 145.00	$ 215.00	$ 125.00	$ 116.00	< HOURLY RATES	
TASK DESCRIPTION											**TOTAL HOURS**	**PER TASK**
1. Preconstruction Assistance	**2**	**4**	**0**	**8**	**6**	**0**	**2**	**2**	**0**	**0**		**24**
Preconstruction Assistance	2	4	0	8	6	0	2	2	0	0	*24*	
2.0 Construction Management	**4**	**38**	**16**	**84**	**66**	**204**	**44**	**60**	**32**	**76**		**624**
Weekly Construction Meetings	0	4	2	16	8	20	8	0	8	8	*74*	
CPM Schedule	0	8	0	16	0	0	20	0	0	0	*44*	
Perform Site Visits	0	0	0	0	0	0	0	0	0	0	*0*	
Requests for Information	2	4	4	8	16	48	4	24	0	24	*134*	
Shop Drawing Submittals	2	8	8	8	28	124	4	24	0	40	*246*	
Request for Proposals	0	2	2	8	8	8	0	0	8	4	*40*	
Field Directives	0	4	0	12	6	4	0	12	8	0	*46*	
Contractor Payment Applications	0	8	0	16	0	0	8	0	8	0	*40*	
Public Outreach	0	0	0	0	0	0	0	0	0	0	*0*	
3. Construction Inspection	**0**	**0**	**0**	**0**	**0**	**0**	**0**	**0**	**0**	**0**		**0**
Inspection Services	0	0	0	0	0	0	0	0	0	0	*0*	
Landscaping and Inspection Services	0	0	0	0	0	0	0	0	0	0	*0*	
Project Closeout	0	0	0	0	0	0	0	0	0	0	*0*	
4. Utility Coordination	**0**	**0**	**0**	**0**	**0**	**0**	**0**	**0**	**0**	**0**		**0**
Utility Coordination	0	0	0	0	0	0	0	0	0	0	*0*	
5. Materials Testing	**0**	**0**	**0**	**0**	**0**	**0**	**0**	**0**	**0**	**0**		**0**
QC Test Program	0	0	0	0	0	0	0	0	0	0	*0*	
QA Test Program	0	0	0	0	0	0	0	0	0	0	*0*	
6. Record Drawings	**0**	**0**	**0**	**0**	**0**	**0**	**0**	**0**	**0**	**0**		**0**
Record Drawings	0	0	0	0	0	0	0	0	0	0	*0*	
ALLOWANCES	**0**	**0**	**0**	**0**	**0**	**0**	**0**	**0**	**0**	**0**		**0**
TOTAL HOURS:	6	42	16	92	72	204	46	62	32	76		**648**

Docusign Envelope ID: 6A2E7FC3-0BE9-4627-B1DF-BA94C73398AB

EXHIBIT C
SUBCONSULTANT DOCUMENTS WITH CONSULTANT

Any subconsultant assumptions, clarifications, exclusions, terms & conditions, signature blocks, etc. included are strictly between the Consultant and their subconsultants, and do not apply to the Agreement between the Consultant and the City.

N/A

RECLAIMED WATER CONVEYANCE IMPROVEMENTS - AMENDMENT #3
ASR WELLS #11 AND #12
PROJECT NO. WW2206.451

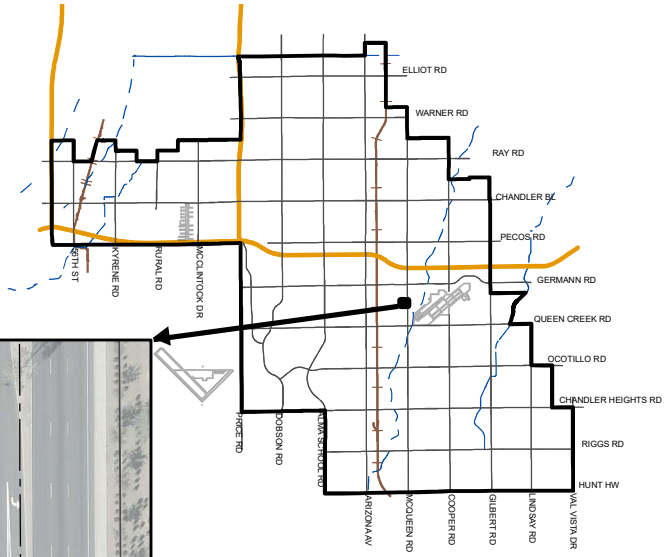

MEMO NO. CP26-026

PROJECT SITE

NTS

ChanGIS

F:\ENGINEER\GENSERV_ArcGISPro_Shared\Map Requests\Capital Projects\2023\Capital_Projects_Map_Requests_2023\Capital_Projects_Map_Requests_2023.aprx

City Council Memorandum Public Works & Utilities Memo No. CP26-027

Date: September 15, 2025
To: Mayor and Council
Thru: John M. Pombier, Acting City Manager
Dawn Lang, Deputy City Manager/CFO
Jeremy Abbott, Acting Public Works and Utilities Director
Daniel Haskins, Capital Projects Division Manager

From: Sandra Story, Engineering Project Manager
Subject: Construction Agreement No. WW2206.401, Change Order No. 3, with PCL Construction, Inc., for the Reclaimed Water Conveyance Improvements

---

Proposed Motion:

Move City Council award Construction Agreement No. WW2206.401, Change Order No. 3, to PCL Construction, Inc., for the Reclaimed Water Conveyance Improvements, in the amount of $2,327,384.58, for a revised agreement amount not to exceed $15,909,279.58.

Background/Discussion:

In October 2021, the city executed a reclaimed water agreement with Intel Corporation for additional reclaimed water supply. The city intends to convey the additional reclaimed water from the Airport Water Reclamation Facility (AWRF), located at 905 E. Queen Creek Road, to the Ocotillo area. This approach requires utilization of existing infrastructure and installation of additional off-site pipeline within the city's rights of way. Additionally, improvements at the city's water reclamation facilities will be required, as well as the installation of Aquifer Storage and Recovery (ASR) Wells to recharge and recover water.

On June 26, 2023, the City Council awarded Construction Manager at Risk Agreement No. WW2206.401, to PCL Construction, Inc., for the Reclaimed Water Conveyance Improvements. Change Order No. 3 is for the early procurement of the long lead items required to facilitate the construction of two ASR wells. An additional 571 calendar days have been added for a revised total of 1,332

calendar days to final completion, following the Notice To Proceed.

A related Professional Services Agreement with Wilson Engineers, LLC, for the Reclaimed Water Conveyance Improvements, is also scheduled for this City Council meeting.

Evaluation:

Staff reviewed the scope of work, billing rates, and total fee for the Change Order No. 3 and determined them to be reasonable.

Financial Implications:

The cost of this project will be reimbursed by Intel Corporation (20%), using funding provided for public infrastructure in their development agreement with the City of Chandler. The remaining 80% of the cost will utilize State of Arizona Title 42 funding for public infrastructure per the city's October 2021 Reclaimed Water Agreement with Intel Corporation.

Fiscal Impact

Account No.	Fund Name	Program Name	Dollar Amount	CIP Funded Y/N
615.3910.6814.0000.6WW690	Wastewater Operating	Reclaimed Water Conveyance	$2,327,384.58	Y

Attachments

Change Order - PCL

Change Order Location Map

Docusign Envelope ID: 15015610-5E21-4DDD-9336-2FF8A1795E23

CHANDLER arizona
Community of Innovation

PROJECT NO.: **WW2206.401**
CHANGE ORDER NO.: **3**
DATE: **8/22/2025**

This Change Order No. 3 ("Change Order No. **. 3**") to the construction services agreement is made by and between the City of Chandler, PCL Construction, Inc., a Colorado corporation, ("City") and ("Contractor"), on this _____ day of _____, 2025 ("Effective Date" by Clerk).

Change Order not valid until signed by both the City and the Contractor. Contractor's signature indicates Agreement herewith, including any adjustments in the Agreement Price or Agreement Time.

Project Name: **Reclaimed Water Conveyance Improvements**
Project No.: **WW2206.401**
User Dept.: **Public Works & Utilities** NTP Date: **8/31/2023**

TO: **PCL Construction, Inc.** (Contractor) **1711 W. Greentree Dr., Ste. 201, Tempe, AZ 85284** (Mailing Address)
Seth Richards (Company Representative) **sethrichards@pcl.com** (Email Address)

Contractor must make the following changes to this Agreement:
(Detail scope change (Exh. A) / cost breakdown (Exh. B), if needed)

Long Lead Procurement.

Amendment authorized by Owner Name: **Joseph Kennis** **Date:** **8/22/2025**

Original Agreement amount:	$2,614,687
Previous Change Order total:	$10,967,208
Last Agreement amount approved by Council:	$13,581,895
This Change Order:	$2,327,384.58
This Change Order + previous Change Order(s) **not** approved by Council total:	$2,327,384.58
Revised Agreement total:	$15,909,279.58

Council Approval Required (yes indicates approval required)	**YES**	**NO**
Change Order(s) total over $100,000:	☒	☐
Change Order(s) total causes Agreement to exceed $100,000:	☒	☐

Agreement Time	
Agreement time prior to this Change Order (including previous change order(s):	**761** Calendar Days
Net change resulting from this Change Order:	**571** Calendar Days
Revised Agreement time (including this Change Order):	**1,332** Calendar Days

Council Approval (if applicable)	
Council Approval Date:	**9/18/2025**

THE ABOVE IS AGREED TO BY:

"CITY"
CITY OF CHANDLER

Mayor

RECOMMENDED BY:

Daniel Haskins August 28, 2025
Daniel Haskins, P.E.

APPROVED AS TO FORM:

City Attorney

ATTEST:

City Clerk Seal

"CONTRACTOR"
PCL CONSTRUCTION, INC.

August 28, 2025
Signature Date

Ankur Talwar
Print Name

District Manager
Title

Artalwar@pcl.com
Signer Email Address

Certificate Of Completion

Envelope Id: 15015610-5E21-4DDD-9336-2FF8A1795E23 | Status: Sent

Subject: !!RUSH!! *COUNCIL 9/18* WW2206.401 CO#3 Reclaimed Water Conveyance Improvements - PCL

EDMS Application: PWU_CAPITAL_PROJECTS_CONTRACT_MANAGEMENT

Source Envelope:

Document Pages: 2	Signatures: 2	Envelope Originator:
Certificate Pages: 7	Initials: 0	Chandler CIP
AutoNav: Enabled		PO Box 4008
EnvelopeId Stamping: Enabled		Chandler, 85244
Time Zone: (UTC-07:00) Arizona		chandlercip@chandleraz.gov
		IP Address: 198.241.2.1

Record Tracking

Status: Original 8/25/2025 | 04:06 PM	Holder: Chandler CIP chandlercip@chandleraz.gov	Location: DocuSign
Security Appliance Status: Connected	Pool: StateLocal	
Storage Appliance Status: Connected	Pool: City of Chandler	Location: Docusign

Signer Events	Signature	Timestamp
Ankur Talwar Artalwar@pcl.com District Manager Security Level: Email, Account Authentication (None)	Signature Adoption: Drawn on Device Using IP Address: 2600:100e:b08f:ae52:3d3e:598a:758b:7c1d Signed using mobile	Sent: 8/28/2025 | 09:34 AM Viewed: 8/28/2025 | 09:42 AM Signed: 8/28/2025 | 09:44 AM
Electronic Record and Signature Disclosure: Accepted: 8/28/2025 | 09:42 AM ID: 544beb48-9083-4d09-8c09-cc054a127b84		
Daniel Haskins daniel.haskins@chandleraz.gov CIP City Engineer Security Level: Email, Account Authentication (None)	Daniel Haskins Signature Adoption: Pre-selected Style Using IP Address: 198.241.2.1	Sent: 8/28/2025 | 09:44 AM Viewed: 8/28/2025 | 10:33 AM Signed: 8/28/2025 | 10:33 AM
Electronic Record and Signature Disclosure: Accepted: 8/28/2025 | 10:33 AM ID: 67026f8d-f2a8-4e20-a2cf-3d4610434e0e		
Daniel L Brown Daniel.Brown@chandleraz.gov Security Level: Email, Account Authentication (None)		
Electronic Record and Signature Disclosure: Accepted: 7/1/2021 | 08:17 AM ID: 563d172a-e614-4b9b-b2a1-61a0afc8280a		
Kevin Hartke kevin.hartke@chandleraz.gov Security Level: Email, Account Authentication (None)		
Electronic Record and Signature Disclosure: Accepted: 6/28/2021 | 11:17 AM ID: 2531f230-027c-41f7-9166-1189df6a8c8f		

Signer Events	Signature	Timestamp
Dana DeLong Dana.DeLong@chandleraz.gov Security Level: Email, Account Authentication (None) **Electronic Record and Signature Disclosure:** Accepted: 6/28/2021 | 01:03 PM ID: e796186e-c533-4a41-978c-34d69e29778a		

In Person Signer Events	Signature	Timestamp

Editor Delivery Events	Status	Timestamp
Michelle Reeder michelle.reeder@chandleraz.gov Procurement Senior Specialist City of Chandler Security Level: Email, Account Authentication (None) **Electronic Record and Signature Disclosure:** Accepted: 3/18/2025 | 10:55 AM ID: 1ac24ab2-9990-4da1-8fdc-64ed51bd8509		Sent: 8/28/2025 | 10:33 AM
Records Division Signing Group: Records Division Security Level: Email, Account Authentication (None) **Electronic Record and Signature Disclosure:** Not Offered via Docusign		

Agent Delivery Events	Status	Timestamp
Seth Richards sethrichards@pcl.com Manager, Special Projects Security Level: Email, Account Authentication (None) **Electronic Record and Signature Disclosure:** Accepted: 7/21/2025 | 09:26 PM ID: 061346d0-cab2-4c79-80a3-e3eec944373b	VIEWED Using IP Address: 2a09:bac1:76a0:8e0::3f9:33 Completed using mobile	Sent: 8/25/2025 | 04:32 PM Resent: 8/27/2025 | 09:43 AM Resent: 8/27/2025 | 01:57 PM Viewed: 8/28/2025 | 05:26 AM Completed: 8/28/2025 | 09:34 AM

Intermediary Delivery Events	Status	Timestamp

Certified Delivery Events	Status	Timestamp

Carbon Copy Events	Status	Timestamp
Michelle Reeder michelle.reeder@chandleraz.gov Procurement Senior Specialist City of Chandler Security Level: Email, Account Authentication (None) **Electronic Record and Signature Disclosure:** Accepted: 3/18/2025 | 10:55 AM ID: 1ac24ab2-9990-4da1-8fdc-64ed51bd8509	COPIED	Sent: 8/25/2025 | 04:32 PM
Sandra Story Sandra.Story@chandleraz.gov Security Level: Email, Account Authentication (None) **Electronic Record and Signature Disclosure:**	COPIED	Sent: 8/25/2025 | 04:32 PM Viewed: 8/25/2025 | 04:40 PM

Carbon Copy Events	Status	Timestamp
Accepted: 11/14/2024 | 03:53 PM ID: 74d86683-28e7-4c51-92e5-4b9ea920720b		
Michelle Reeder michelle.reeder@chandleraz.gov Procurement Senior Specialist City of Chandler Security Level: Email, Account Authentication (None) **Electronic Record and Signature Disclosure:** Accepted: 3/18/2025 | 10:55 AM ID: 1ac24ab2-9990-4da1-8fdc-64ed51bd8509	COPIED	Sent: 8/28/2025 | 09:44 AM
Sandra Story Sandra.Story@chandleraz.gov Security Level: Email, Account Authentication (None) **Electronic Record and Signature Disclosure:** Accepted: 11/14/2024 | 03:53 PM ID: 74d86683-28e7-4c51-92e5-4b9ea920720b	COPIED	Sent: 8/28/2025 | 10:33 AM Viewed: 8/28/2025 | 10:34 AM
Michelle Reeder michelle.reeder@chandleraz.gov Security Level: Email, Account Authentication (None) **Electronic Record and Signature Disclosure:** Accepted: 3/18/2025 | 10:55 AM ID: 1ac24ab2-9990-4da1-8fdc-64ed51bd8509		
Michelle Reeder michelle.reeder@chandleraz.gov Security Level: Email, Account Authentication (None) **Electronic Record and Signature Disclosure:** Accepted: 3/18/2025 | 10:55 AM ID: 1ac24ab2-9990-4da1-8fdc-64ed51bd8509		
Bridgette Rhodehouse Bridgette.Rhodehouse@chandleraz.gov Jennifer Ekblad jennifer.ekblad@chandleraz.gov Dorothy Hernandez dorothy.hernandez@chandleraz.gov Vianka Enriquez Vianka.Enriquez@chandleraz.gov Signing Group: Records Division Security Level: Email, Account Authentication (None) **Electronic Record and Signature Disclosure:** Not Offered via Docusign		
Michelle Reeder michelle.reeder@chandleraz.gov Security Level: Email, Account Authentication (None) **Electronic Record and Signature Disclosure:** Accepted: 3/18/2025 | 10:55 AM ID: 1ac24ab2-9990-4da1-8fdc-64ed51bd8509		
Donna Rygiel donna.rygiel@chandleraz.gov Security Level: Email, Account Authentication (None)		

Carbon Copy Events	Status	Timestamp
Electronic Record and Signature Disclosure: Accepted: 3/28/2025 | 11:23 AM ID: 40e41fec-eb0c-46d0-b3fc-d151223d8411		
Sandra Story Sandra.Story@chandleraz.gov Security Level: Email, Account Authentication (None)		
Electronic Record and Signature Disclosure: Accepted: 11/14/2024 | 03:53 PM ID: 74d86683-28e7-4c51-92e5-4b9ea920720b		
Melanie Sikes Melanie.Sikes@chandleraz.gov Security Level: Email, Account Authentication (None)		
Electronic Record and Signature Disclosure: Accepted: 8/1/2025 | 02:13 PM ID: 5d4b3f3a-63fb-4d78-bb91-862fc465e5d4		
Adam Kleiser adam.kleiser@chandleraz.gov Security Level: Email, Account Authentication (None)		
Electronic Record and Signature Disclosure: Accepted: 8/21/2025 | 02:44 PM ID: 36372d73-1108-4cf4-9e2e-5e72cc011bcd		
Allan Zimmerman Allan.Zimmerman@chandleraz.gov Security Level: Email, Account Authentication (None)		
Electronic Record and Signature Disclosure: Accepted: 3/10/2022 | 07:58 AM ID: fa1c98a5-4381-4529-8f21-4c6629aed7b1		
Seth Richards sethrichards@pcl.com Security Level: Email, Account Authentication (None)		
Electronic Record and Signature Disclosure: Accepted: 7/21/2025 | 09:26 PM ID: 061346d0-cab2-4c79-80a3-e3eec944373b		

Witness Events	Signature	Timestamp

Notary Events	Signature	Timestamp

Envelope Summary Events	Status	Timestamps
Envelope Sent	Hashed/Encrypted	8/25/2025 | 04:32 PM
Envelope Updated	Security Checked	8/28/2025 | 09:34 AM
Envelope Updated	Security Checked	8/28/2025 | 09:34 AM

Payment Events	Status	Timestamps

Electronic Record and Signature Disclosure

ELECTRONIC RECORD AND SIGNATURE DISCLOSURE

From time to time, City of Chandler (we, us or Company) may be required by law to provide to you certain written notices or disclosures. Described below are the terms and conditions for providing to you such notices and disclosures electronically through the DocuSign system. Please read the information below carefully and thoroughly, and if you can access this information electronically to your satisfaction and agree to this Electronic Record and Signature Disclosure (ERSD), please confirm your agreement by selecting the check-box next to 'I agree to use electronic records and signatures' before clicking 'CONTINUE' within the DocuSign system.

Getting paper copies

At any time, you may request from us a paper copy of any record provided or made available electronically to you by us. You will have the ability to download and print documents we send to you through the DocuSign system during and immediately after the signing session and, if you elect to create a DocuSign account, you may access the documents for a limited period of time (usually 30 days) after such documents are first sent to you. After such time, if you wish for us to send you paper copies of any such documents from our office to you, you will be charged a $0.15 per-page fee. You may request delivery of such paper copies from us by following the procedure described below.

Withdrawing your consent

If you decide to receive notices and disclosures from us electronically, you may at any time change your mind and tell us that thereafter you want to receive required notices and disclosures only in paper format. How you must inform us of your decision to receive future notices and disclosure in paper format and withdraw your consent to receive notices and disclosures electronically is described below.

Consequences of changing your mind

If you elect to receive required notices and disclosures only in paper format, it will slow the speed at which we can complete certain steps in transactions with you and delivering services to you because we will need first to send the required notices or disclosures to you in paper format, and then wait until we receive back from you your acknowledgment of your receipt of such paper notices or disclosures. Further, you will no longer be able to use the DocuSign system to receive required notices and consents electronically from us or to sign electronically documents from us.

All notices and disclosures will be sent to you electronically

Unless you tell us otherwise in accordance with the procedures described herein, we will provide electronically to you through the DocuSign system all required notices, disclosures, authorizations, acknowledgements, and other documents that are required to be provided or made available to you during the course of our relationship with you. To reduce the chance of you inadvertently not receiving any notice or disclosure, we prefer to provide all of the required notices and disclosures to you by the same method and to the same address that you have given us. Thus, you can receive all the disclosures and notices electronically or in paper format through the paper mail delivery system. If you do not agree with this process, please let us know as described below. Please also see the paragraph immediately above that describes the consequences of your electing not to receive delivery of the notices and disclosures electronically from us.

How to contact City of Chandler:

You may contact us to let us know of your changes as to how we may contact you electronically, to request paper copies of certain information from us, and to withdraw your prior consent to receive notices and disclosures electronically as follows:
To contact us by email send messages to: esignature@chandleraz.gov

To advise City of Chandler of your new email address

To let us know of a change in your email address where we should send notices and disclosures electronically to you, you must send an email message to us at esignature@chandleraz.gov and in the body of such request you must state: your previous email address, your new email address. We do not require any other information from you to change your email address.

If you created a DocuSign account, you may update it with your new email address through your account preferences.

To request paper copies from City of Chandler

To request delivery from us of paper copies of the notices and disclosures previously provided by us to you electronically, you must send us an email to esignature@chandleraz.gov and in the body of such request you must state your email address, full name, mailing address, and telephone number. We will bill you for any fees at that time, if any.

To withdraw your consent with City of Chandler

To inform us that you no longer wish to receive future notices and disclosures in electronic format you may:

i. decline to sign a document from within your signing session, and on the subsequent page, select the check-box indicating you wish to withdraw your consent, or you may;

ii. send us an email to esignature@chandleraz.gov and in the body of such request you must state your email, full name, mailing address, and telephone number. We do not need any other information from you to withdraw consent.. The consequences of your withdrawing consent for online documents will be that transactions may take a longer time to process..

Required hardware and software

The minimum system requirements for using the DocuSign system may change over time. The current system requirements are found here: https://support.docusign.com/guides/signer-guide-signing-system-requirements.

Acknowledging your access and consent to receive and sign documents electronically

To confirm to us that you can access this information electronically, which will be similar to other electronic notices and disclosures that we will provide to you, please confirm that you have read this ERSD, and (i) that you are able to print on paper or electronically save this ERSD for your future reference and access; or (ii) that you are able to email this ERSD to an email address where you will be able to print on paper or save it for your future reference and access. Further, if you consent to receiving notices and disclosures exclusively in electronic format as described herein, then select the check-box next to 'I agree to use electronic records and signatures' before clicking 'CONTINUE' within the DocuSign system.

By selecting the check-box next to 'I agree to use electronic records and signatures', you confirm that:

- You can access and read this Electronic Record and Signature Disclosure; and
- You can print on paper this Electronic Record and Signature Disclosure, or save or send this Electronic Record and Disclosure to a location where you can print it, for future reference and access; and
- Until or unless you notify City of Chandler as described above, you consent to receive exclusively through electronic means all notices, disclosures, authorizations, acknowledgements, and other documents that are required to be provided or made available to you by City of Chandler during the course of your relationship with City of Chandler.

RECLAIMED WATER CONVEYANCE IMPROVEMENTS - CHANGE ORDER No. 3
ASR WELLS #11 AND #12
PROJECT NO. WW2206.401

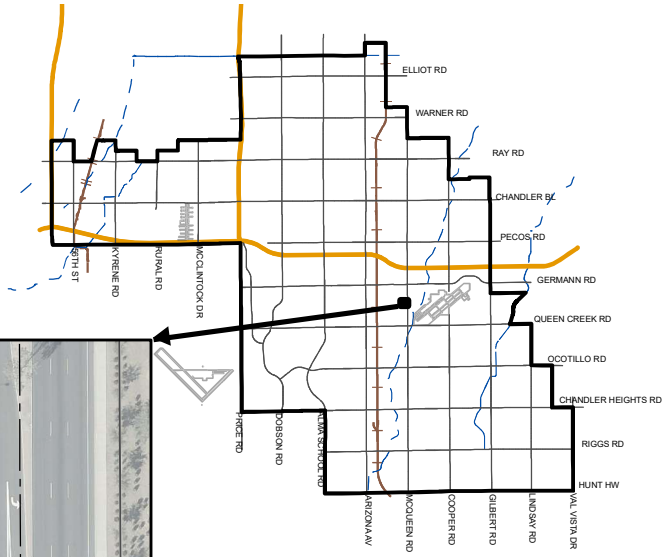

MEMO NO. CP26-027

PROJECT SITE

NTS

ChanGIS

F:\ENGINEER\GENSERV_ArcGISPro_Shared\Map Requests\Capital Projects\2023\Capital_Projects_Map_Requests_2023\Capital_Projects_Map_Requests_2023.aprx

City Council Memorandum Public Works & Utilities Memo No. ST26-004

Date:	September 15, 2025
To:	Mayor and Council
Thru:	John M. Pombier, Acting City Manager Dawn Lang, Deputy City Manager/CFO Jeremy Abbott, Acting Public Works & Utilities Director
From:	John McFarland, Transportation Manager
Subject:	Purchase of Pavement Maintenance Materials

Proposed Motion:

Move City Council approve the purchase of pavement maintenance materials, from Pavement Restoration, Inc., utilizing Pinal County Contract No. 240328, in an amount not to exceed $470,037.

Background/Discussion:

The Public Works and Utilities Department, Streets Division has an established pavement management restoration and repaving program that addresses the preventative maintenance and rehabilitation needs for the city-maintained roadway sections. This program includes various seals that focus on roadway sections that are in satisfactory condition by replenishing the asphalt binder and fine aggregate material lost through oxidation, weathering, and aging. The focus in prior years has been on Mill & Overlay of about 15 lane miles per year. The new focus is on improving our asphalt life with the use of a rejuvenator, allowing for up to an estimated 21 lane miles annually.

The scope of work includes an asphalt rejuvenator seal, Reclamite, which is applied to street sections to preserve and lengthen the life of the asphalt by sealing smaller cracks and restoring the asphalt binder. Sealants of this type are commonly used in the southwestern United States by local counties and municipalities. This agreement will be adequate to rehabilitate an estimated 15-21 lane miles of residential roadway sections. Roadway sections will not be closed during the seal application, as only half a street will be sealed at a time. The

contractor's scope of work also includes providing material, application, and all traffic control related to the project. Staff will coordinate with the Communications and Public Affairs (CAPA) Department to post project location maps on the city's website. The contractor is responsible for distribution of informational door hangers to notify citizens and businesses when work is scheduled in their areas.

Evaluation:

Pinal County competitively solicited and awarded a contract for pavement maintenance materials. The city has an agreement with the Strategic Alliance for Volume Expenditures (SAVE) purchasing cooperative allowing for use of Pinal County's contracts. Staff recommends cooperative use of this contract because it provides uniform competitive pricing for this cost-effective pavement preservation product. The term of Pinal County's contract is valid through August 15, 2026.

Financial Implications:

Prior year total was $306,801. FY 2025-26 amount is $470,037 which is a 53% increase from the prior year. This is due to the new product material, and the potential increase in lane miles.

Fiscal Impact

Account No.	Fund Name	Program Name	Dollar Amount	CIP Funded Y/N
215.3300.6513	Highway User Revenue	N/A	$470,037	N

City Council Memorandum Public Works & Utilities Memo No. UA26-014

Date: September 15, 2025
To: Mayor and Council
Thru: John M. Pombier, Acting City Manager
Dawn Lang, Deputy City Manager/CFO
Jeremy Abbott, Acting Public Works and Utilities Director
From: Josef Kennis, Wastewater Facilities Manager
Subject: Agreement No. WW3-885-4614, Amendment No. 2, for Iron Salt for Odor & Corrosion Control

---

Proposed Motion:

Move City Council approve Agreement No. WW3-885-4614, Amendment No. 2, with US Peroxide LLC, dba USP Technologies, for iron salt for odor and corrosion control, in an amount not to exceed $600,000, for a one-year period, September 21, 2025, through September 20, 2026.

Background/Discussion:

Wastewater in the city's collection system naturally produces noxious hydrogen sulfide gas, causing odors and deterioration of pipes, manholes, and concrete structures. This odorous gas is the main source of customer odor complaints associated with the city's sewer system and treatment facilities. In order to control the hydrogen sulfide that forms in the large-diameter pipe along Price Road, the addition of an odor-reducing chemical is required. City staff recommends the continuation of the turnkey services from USP Technologies for the addition of iron salt chemical, known as SulFeLox. SulFeLox is an iron salt chemical that keeps hydrogen sulfide in its liquid form and prohibits it from forming gases in the pipe as it travels to the Ocotillo Water Reclamation Facility (OWRF). The contractor will supply and manage the installation, delivery, upkeep, and dosing of SulFeLox in the collection system as they have done over the past three years.

Evaluation:

On September 21, 2023, City Council approved an agreement with US Peroxide LLC, dba USP Technologies, for iron salt for odor and corrosion control, for a one-year period, with the option of up to four (4) additional one-year extensions. The contractor has agreed to extend for one year with the same terms and conditions. Staff recommends extension of the agreements for the term of September 21, 2025, through September 20, 2026. This is the second extension of the original agreement.

Fiscal Impact

Account No.	Fund Name	Program Name	Dollar Amount	CIP Funded Y/N
615.3970.5219.0.0.0	Wastewater Operating	Other Professional Services	$600,000	N

Attachments

Amendment No. 2

Docusign Envelope ID: 5817E861-A339-4563-AEBB-E0D772BFC25B

City Clerk Document No. _____

City Council Meeting Date:_____

AMENDMENT TO CITY OF CHANDLER AGREEMENT
IRON SALT FOR ODOR & CORROSION CONTROL
CITY OF CHANDLER AGREEMENT NO. WW3-885-4614

THIS AMENDMENT NO. 2 (Amendment No. 2) is made and entered into by and between the City of Chandler, an Arizona municipal corporation (City), and us Peroxide LLC. dba USP Technologies, a Delaware corporation (Contractor), (City and Contractor may individually be referred to as Party and collectively referred to as Parties) and made _____ , 2025 (Effective Date).

RECITALS

WHEREAS, the Parties entered into an agreement for a turnkey non-hazardous iron salt product and dosing station as more fully described in the Agreement; and

WHEREAS, the term of the Agreement was September 21, 2023 through September 20, 2024, with the option of up to four one-year extensions; and

WHEREAS, the Parties wish to exercise the second option through this Amendment to extend the Agreement for one year.

AGREEMENT

NOW THEREFORE, the Parties agree as follows:

1. The recitals are accurate and are incorporated and made a part of the Agreement by this reference.

2. Section III is amended to read as follows: The Agreement is extended for a one-year period September 21, 2025 through September 20, 2026.

3. Section IV is amended to read as follows: The City will pay the Contractor the per unit cost set forth in Revised Exhibit B of the original Agreement, which is incorporated into and made a part of this Amendment No. 2 by this reference. Total payments made to the Contractor during the term of this Amendment No. 2 will not exceed $ 600,000.00.

4. All other terms and conditions of the Agreement remain unchanged and in full force and effect. If a conflict or ambiguity arises between this Amendment No. 2 and the Agreement, the terms and conditions in this Amendment No. 2 prevail and control.

IN WITNESS WHEREOF, the Parties have entered into this Amendment on the Effective Date.

FOR THE CITY

By: _____

Its: _____Mayor_____

APPROVED AS TO FORM:

By: _____
City Attorney

JMB

ATTEST:

By: _____
City Clerk

FOR THE CONTRACTOR

By: Jordan Butler

Its: VP & General Manager, USP Technologies

REVISED EXHIBIT B TO AGREEMENT
COMPENSATION AND FEES

Fees can be laid out as cost per equipment, set-up, hauling, and chemical costs. It is preferred to have the cost be all included in the cost per gallon delivered.

- Chemical Costs – Monthly usage estimate of 200 gpd or more
- Equipment Costs – Monthly facility fee per system
- Total Labor Costs – Mobilization fee per system

Item Description	UOM	Amount
Chemical Costs (SulFeLox product)	Per Gallon	$ 7.03
Equipment Costs	Month Facility Fee/System	$ N/A
Labor Costs	Lump Sum	$ N/A

Pricing is comprehensive in nature and includes supply of:

- *Supply of chemicals necessary for support of the odor control program, specifically SulFeLox buffered iron solution*
- *USP-7,800-gallon double-walled tank*
- *Duplex pump skid specifically designed for SulFeLox product*
- *Fully integrated Advanced Dosing Control System for 24hr dose profiling*
- *All chemical suction and discharge piping, valves, etc. to the treatment process, including new fill line at Lone Butte Diversion Structure.*
- *ChemWatch ACS control system for remote monitoring and dosing control of the system*
- *Equipment mobilization, installation, start-up, and maintenance*
- *Initial on-site survey to determine peroxide/sulfide reaction rates and H25 removal efficiency*
- *Project management, applications & process optimization services*
- *Seasonal program optimization and equipment maintenance services*
- *Chemical safety training for site personnel*
- *Inventory and delivery management (ACS controller)*
- *All necessary sampling (liquid and vapor) labor and installation*
- *Weekly program reporting and documentation (USP Vista)*

SulFeLox program pricing at $7.03/gal delivered in full truckloads of 44k lbs.
Volume pricing of $6.35/gal will apply for annual average use rate of >350 GPD.

Pricing good through 1/31/2026

City Council Memorandum Public Works & Utilities Memo No. CP26-028

Date: September 15, 2025
To: Mayor and Council
Thru: John M. Pombier, Acting City Manager
Dawn Lang, Deputy City Manager/CFO
Jeremy Abbott, Acting Public Works and Utilities Director
Daniel Haskins, Capital Projects Division Manager
From: Sandra Story, Engineering Project Manager
Subject: Construction Agreement No. WW2206.403, Change Order No. 1, with Revolution Industrial, LLC, for the Hamilton Street Reclaimed Water Transmission Main (Queen Creek Road to Ryan Road)

Proposed Motion:

Move City Council award Construction Agreement No. WW2206.403, Change Order No. 1, to Revolution Industrial, LLC, for the Hamilton Street Reclaimed Water Transmission Main (Queen Creek Road to Ryan Road), in the amount of $520,872.65, for a revised agreement amount not to exceed $6,420,957.38.

Background/Discussion:

In October 2021, the city executed a reclaimed water agreement with Intel Corporation for the city to provide additional reclaimed water supply to Intel. In order to meet the agreement, the city is constructing improvements at the Airport Water Reclamation Facility (AWRF), located at 905 E. Queen Creek Road. The additional reclaimed water will be pumped from AWRF for recharge to the Tumbleweed Aquifer Storage and Recover (ASR) wells. This enhancement requires the installation of an additional reclaimed water transmission main from AWRF north along Hamilton Street to Ryan Road, and then east on Ryan Road to the newly drilled Tumbleweed Aquifer Storage Recovery wells 11 and 12.

On November 7, 2024, City Council awarded a Construction Agreement to Revolution Industrial, LLC, for the Hamilton Street Reclaimed Water Transmission Main (Queen Creek Road to Ryan Road). Change Order No. 1 is to extend the reclaimed water line on Ryan Road approximately 268 feet to the east and north.

An additional 79 calendar days have been added for a revised total of 349 calendar days to final completion, following the Notice To Proceed.

Evaluation:

Staff reviewed the scope of work, billing rates, and total fee for the Change Order No. 1 and determined them to be reasonable.

Financial Implications:

The cost of this project will be reimbursed by Intel Corporation (20%) using funding provided for public infrastructure in their development agreement with the City of Chandler. The remaining 80% of the cost will utilize State of Arizona Title 42 funding for public infrastructure per the City's October 2021 Reclaimed Water Agreement with Intel Corporation.

Fiscal Impact

Account No.	Fund Name	Program Name	Dollar Amount	CIP Funded Y/N
615.3910.6814.0000.6WW690	Wastewater Operating	Reclaimed Water Conveyance	$520,872.65	Y

Attachments

Change Order - Revolution

Location Map

Docusign Envelope ID: 23EE9BC1-A675-4354-9B50-6EAFD66ECE33

CHANDLER arizona
Community of Innovation

PROJECT NO.: **WW2206.403**
CHANGE ORDER NO.: **1**
DATE: **8/22/2025**

This Change Order No. 1 ("Change Order No. **. 1**") to the construction services agreement is made by and between the City of Chandler, Revolution Industrial, LLC, an Arizona limited liability company, ("City") and ("Contractor"), on this _____ day of _____, 2025 ("Effective Date" by Clerk).

Change Order not valid until signed by both the City and the Contractor. Contractor's signature indicates Agreement herewith, including any adjustments in the Agreement Price or Agreement Time.

Project Name: **Hamilton Street Reclaimed Water Transmission Main: Queen Creek Road to Ryan Road**
Project No.: **WW2206.403**
User Dept.: **Public Works & Utilities** NTP Date: **12/16/2024**

TO: **Revolution Industrial, LLC** (Contractor) **3115 S. Price Road #130, Chandler, AZ 85248** (Mailing Address)
Christopher Nay (Company Representative) **chris@revolutionindustrial.com** (Email Address)

Contractor must make the following changes to this Agreement:
(Detail scope change (Exh. A) / cost breakdown (Exh. B), if needed)

Extend reclaimed water line on Ryan Road approximately 268' to the east and north.

Amendment authorized by Owner Name: **Josef Kennis** **Date:** **8/22/2025**

Original Agreement amount:	$5,900,894.73
Previous Change Order total:	n/a
Last Agreement amount approved by Council:	$5,900,084.73
This Change Order:	$520,872.65
This Change Order + previous Change Order(s) not approved by Council total:	$520,872.65
Revised Agreement total:	$6,420,957.38

Council Approval Required (yes indicates approval required)	**YES**	**NO**
Change Order(s) total over $100,000:	☒	☐
Change Order(s) total causes Agreement to exceed $100,000:	☒	☐

Agreement Time	
Agreement time prior to this Change Order (including previous change order(s):	**270** Calendar Days
Net change resulting from this Change Order:	**79** Calendar Days
Revised Agreement time (including this Change Order):	**349** Calendar Days

Council Approval (if applicable)	
Council Approval Date:	**8/22/2025**

THE ABOVE IS AGREED TO BY:

"CITY"
CITY OF CHANDLER

Mayor

RECOMMENDED BY:

Daniel Haskins August 26, 2025
Daniel Haskins, P.E.

APPROVED AS TO FORM:

City Attorney

ATTEST:

City Clerk Seal

"CONTRACTOR"
REVOLUTION INDUSTRIAL, LLC

Chris Nay August 26, 2025
Signature Date

Chris Nay
Print Name

Vice President
Title

chris@revolutionindustrial.com
Signer Email Address

Docusign Envelope ID: 23EE9BC1-A675-4354-9B50-6EAFD66ECE33

Revolution INDUSTRIAL A LOENBRO COMPANY

Change Order: 5478 - 32 / Date: 8/15/2025
Project Number: AZR5LB3

Revolution Industrial
3115 S Price Rd, Suite 130
Chandler, AZ
85248, US
(480) 993-6699

Prepared By:
Dillon Corrington

dcorrington@revolutionindustrial.com

Project: **240882 Chandler - Hamilton**

Scope of Work

This PCO is in reference to the design extension (EC0002 and EC003) as requested by Wilson Engineers on behalf of the City of Chandler for the 16 and 24IN RW Line.

This PCO is inclusive of all labor, materials, equipment, and sub costs necessary to to complete the proposed work.

EC002

	Quantity	Unit Cost	Total Cost
16" Reclaimed and Fittings	324 ea	$361.93	$117,265.32
16" 90 Degree Bend	1 ea	$1,025.34	$1,025.34
Flushing Assembly	1 ea	$8,962.80	$8,962.80
ARV	1 ea	$5,089.90	$5,089.90
SRP Pole hold	1 ea	$4,320.00	$4,320.00
Tree and Fence Removal	1 ea	$3,900.00	$3,900.00
Slurry Backfill	320 ea	$144.55	$46,256.87
Additional Paving	104 ea	$101.51	$10,557.04
Thickened Edge	178 ea	$20.64	$3,674.77
Slurry Seal	3,843 ea	$7.32	$28,130.76
Concrete Encasement	40 ea	$679.61	$27,184.40
QC	1 ea	$3,300.00	$3,300.00
Survey, staking and As-builts	1 ea	$6,000.00	$6,000.00
Traffic Control	10 ea	$429.83	$4,298.28

Revolution INDUSTRIAL A LOENBRO COMPANY

Change Order: 5478 - 32 / Date: 8/15/2025
Project Number: AZR5LB3

	Quantity	Unit Cost	Total Cost
Striping	960 ea	$3.90	$3,744.00
Potholing - Vac Truck	2 ea	$3,600.00	$7,200.00
	--	$280,909.48	$280,909.48

ABC Backfill Credit

	Quantity	Unit Cost	Total Cost
ABC Credit	-309 ea	$30.00	-$9,270.00
Civil-Foreman/Lead	-20 hrs	$104.78	-$2,095.68
Civil-Operator	-40 hrs	$97.68	-$3,907.20
Civil-Laborer	-80 hrs	$78.14	-$6,251.52
Excavator CAT 323	-2.5 ea	$900.00	-$2,250.00
Loader CAT 938	-2.5 ea	$960.00	-$2,400.00
QC Sub Credit	1 ea	-$1,320.00	-$1,320.00
	--	-$27,494.40	-$27,494.40

EC003

	Quantity	Unit Cost	Total Cost
24" Reclaimed and Fittings	144 ea	$533.87	$76,877.28
24" 11.25 bend	1 ea	$2,640.00	$2,640.00
Concrete Encasement	35 ea	$679.61	$23,786.35
Irrigation Channel Removal & Restoration	1 ea	$7,590.00	$7,590.00
Tree and Fence Removal	1 ea	$3,900.00	$3,900.00
Hot Tap Tie-in (24"x24")	1 ea	$20,322.00	$20,322.00
24" GV - (CoC Provided FLG x MJ GV)	1 ea	$50,203.20	$50,203.20
QC - Additional	1 ea	$2,400.00	$2,400.00
Survey, staking and As-builts	1 ea	$4,200.00	$4,200.00
Fence Panels	1 ea	$600.00	$600.00
	--	$192,518.83	$192,518.83

Additional Resource Needs for Joint Utility Trenching (45's to Termination)

	Quantity	Unit Cost	Total Cost
Super 16 Dump Truck	32 ea	$144.00	$4,608.00
Trench Boxes	10 ea	$364.18	$3,641.76

Revolution INDUSTRIAL A LOENBRO COMPANY

Change Order: 5478 - 32 / Date: 8/15/2025
Project Number: AZR5LB3

	Quantity	Unit Cost	Total Cost
	--	$8,249.76	$8,249.76

Owners Allowance

	Quantity	Unit Cost	Total Cost
Owners Contingency @ 5% of CO Total	1 ea	$25,000.00	$25,000.00
	--	$25,000.00	$25,000.00

Notes

Summary

Subtotal	$479,183.67
Taxes	$41,688.98

$520,872.65

Accepted By .....

Date .....

CHANDLER arizona

HAMILTON STREET RECLAIMED WATER TRANSMISSION MAIN: QUEEN CREEK ROAD TO RYAN ROAD CONSTRUCTION

PROJECT NO. WW2206.403

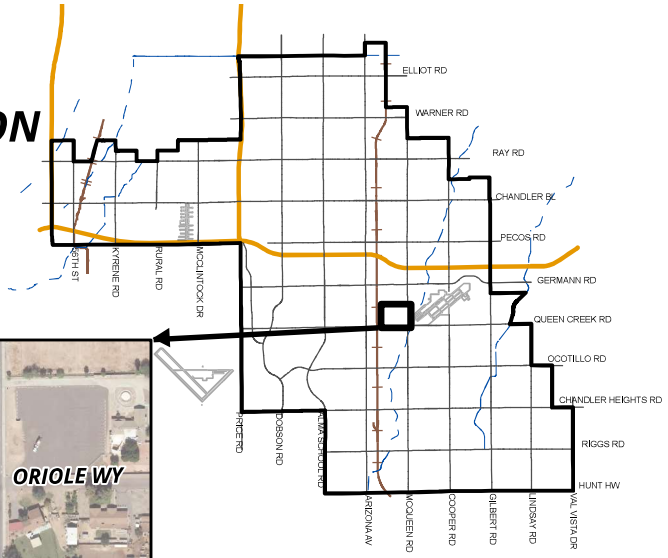

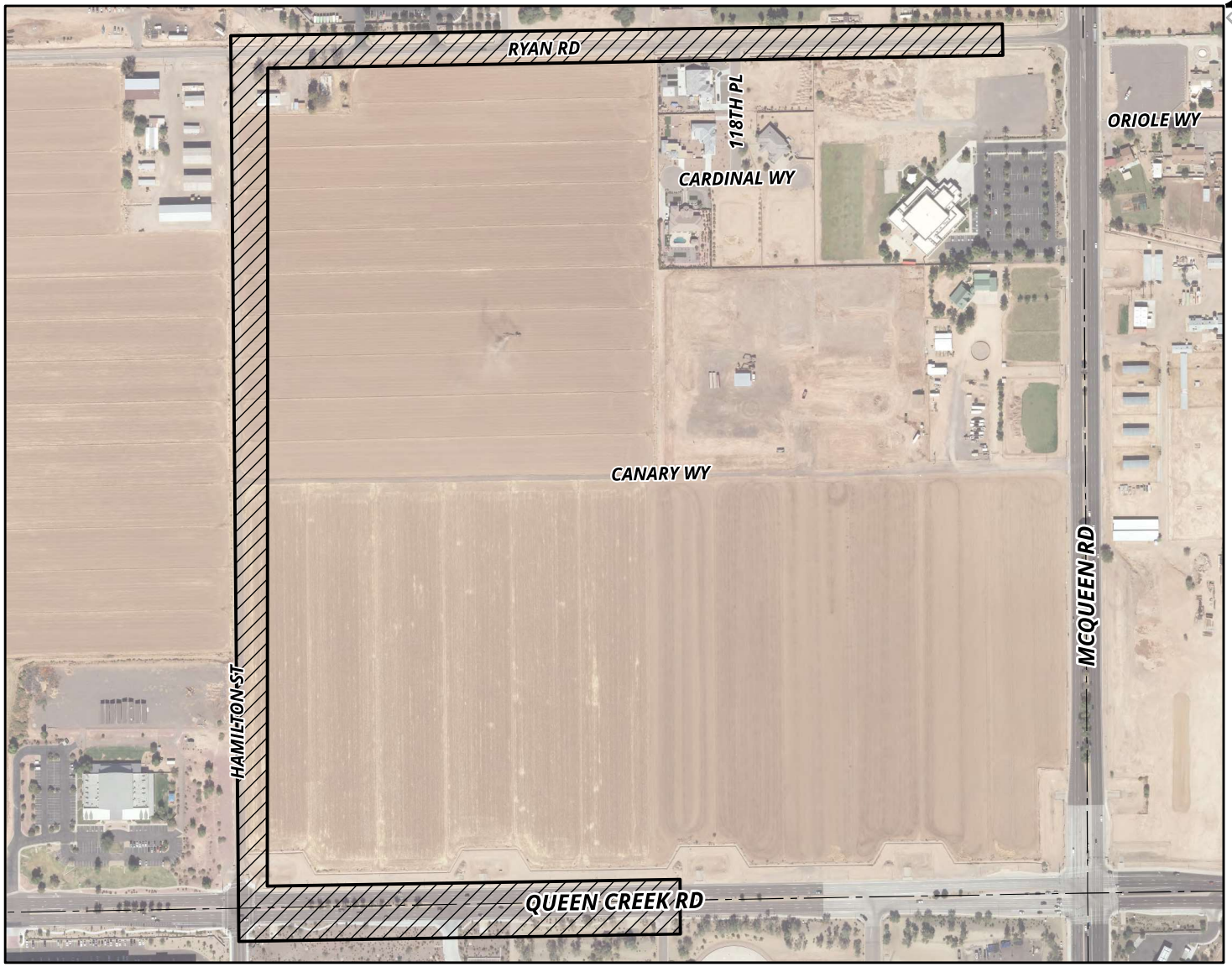

MEMO NO. CP26-028

PROJECT SITE

NTS

ChanGIS

F:\ENGINEER\GENSERV_ArcGISPro_Shared\Map Requests\Capital Projects\2025\CP25-051\CP25-051.aprx 9/26/2024 JulietteC

ITEM 45

City Council Memorandum Management Services Memo No. 26-15

Date: September 15, 2025

To: Mayor and Council

Thru: John M. Pombier, Acting City Manager
Dawn Lang, Deputy City Manager - CFO
Kristi Smith, Management Services Director

From: Danielle Wells, Revenue and Tax Senior Manager

Subject: Special Event Liquor Licenses and Temporary and Permanent Extensions of Liquor License Premises Administratively Approved

---

Attachments

Special Event Liquor and Extensions of Liquor License Premises Approvals

September 18, 2025

Special Event Liquor and Extensions of Liquor Premises Approvals

Special Event Liquor Licenses

Organization Name: Downtown Chandler Community Foundation
Applicant: Rebecca Hill
Event Details: Downtown Chandler Rocktoberfest on Friday, October 3, 2025, from 4:30 p.m. until 10:00 p.m. and Saturday, October 4, 2025 from 1:00 p.m. until 10:00 p.m.
Location: Dr. A.J. Park West, 3 S. Arizona Avenue

Temporary Extensions of Liquor License Premises
N/A

Permanent Extensions of Liquor License Premises
N/A

City Council Memorandum Management Services Memo No. MS 26-15

Date: September 15, 2025
To: Mayor and Council
John M. Pombier, Acting City Manager
Thru: Dawn Lang, Deputy City Manager - CFO
Kristi Smith, Management Services Director
From: Christina Pryor, Procurement & Supply Senior Manager
Subject: Contracts and Agreements Administratively Approved, Month of August 2025

Background/Discussion

On November 7, 2022, City Council approved Ordinance No. 5030 amending the Code of the City of Chandler, Chapter 3, raising the threshold for Council approval of contracts and agreements for materials, services, equipment, and construction from $50,000 to $100,000. The threshold for Council approval of contracts and agreements for professional services was raised from $30,000 to $100,000. The changes allow contracts and agreements valued less than $100,000 to be administratively approved. As part of the change, Council requested a monthly summary of contracts and agreements approved under the newly adopted thresholds that would have required Council approval under the previous thresholds. The attached report summarizes the administratively approved contracts and agreements for materials, services, equipment, and construction valued between $50,000 and $99,999, and professional services valued between $30,000 and $99,999.

Attachments

Contracts and Agreements Administratively Approved

Informational Procurement Council Item – August 2025 Administrative Approvals

Administrative Approval of Contracts and Agreements for Materials, Services, Equipment and Construction Valued Between $50,000 and $99,999 and Professional Services Valued Between $30,000 and $99,999

Agreement No.: 4652
Subject: Digital Marketing Consulting Services
Contractor: Bright Brothers, LLC
Value: $55,000.00
Notes: Provides digital marketing consulting services for CAPA.

Agreement No.: HR5-918-4886
Subject: Employee Assistance Program
Contractor: CuraLinc Healthcare
Value: $60,000.00
Notes: Provides for services for the employee assistance program.

Agreement No.: CTR062304
Subject: Kubota Skid Steer Loader
Contractor: Bobcat
Value: $79,380.00
Notes: Skid steer loader for the Parks Department.

Agreement No.: CS3-961-4635
Subject: Various Sports Officials
Contractor: Spiker Sports, LLC
Value: $60,000
Notes: Provides referees for city recreation programs.

Agreement No.: CS4-961-4667
Subject: Softball Umpire Services
Contractor: Dynamic Officials and Sports, LLC
Value: $95,000
Notes: Provides softball umpires for city recreation programs.

Agreement No.: WW2001.206
Subject: Ocotillo Brine Reduction Facility Permeate Tank Modifications
Contractor: Carollo Engineers, Inc.
Value: $52,000.00
Notes: Design services.

Contracts or Agreements with Significant (+50%) Price Changes Valued Between $50,000 and $99,999

Agreement No.:
Subject:
Contractor:
Value:
Notes: