END PROJECT
MATCH BUTLER - 4TH ST IMPROVEMENTS
SINAGUA MIDDLE SCHOOL
11.0' FUTS
11.0' LANE
11.0' LANE
10.0' TURN LANE
11.0' LANE
11.0' LANE
11.0' FUTS
202
210
601
C
605
610
202
210
601
605
620
EX. WALL
201
N SINAGUA HEIGHTS DR
201
ROW
202
210
601
83.0' ROW
BUTLER AVE
D
219 ft
605
EX WALL
CURB RETURN MEDIAN
E KOKOPELI LN
MUSTANG WAY
MATCH SINAGUA IMPROVEMENTS
201
23.5 FT LANE
14.0 FT MEDIAN
20.0 FT LANE
20 ft
620
202
E
610
6810
6800
6790
6780
108 ft
~5.5% slope
FIRE STATION
CAR WASH
605
201
210
601
605
MATCH KNOLES IMPROVEMENTS
201
EX WALL
KNOLES ELEMENTARY SCHOOL
11.0 FT FUTS
11.0 FT LANE
11.0 FT LANE
10.0 FT TURN LANE
11.0 FT LANE
11.0 FT LANE
80.0' ROW
601
202
210
F
270
210
605
EXISTING 12' FUTS TRAIL
WALL
RELOCATE TRANSFORMER
210
202
601
6790
SU-30 (TRASH TRUCK)*
GAS STATION
SU-40 (LARGE SINGLE UNIT TRUCK)*
WB-40 (INTERMEDIATE SEMI-TRAILER)*
ELIMINATE RIGHT TURN LANE
620
202
601
210
601
G
270
FOX GLENN ST
201
201
SU-30 (TRASH TRUCK)*
ELIMINATE RIGHT TURN LANE
270
605
601
210
101
202
620
270
501
620
250
270
210
900
901
EXISTING 12' FUTS TRAIL
SU-30 (TRASH TRUCK)*
605
202
210
605
250
610
FOX GLENN PARK
BUTLER AVE

*VEHICLE TURNING MOVEMENTS ARE SHOWN FOR DRAFT SUBMITTAL, WILL BE TURNED OFF ON FINAL.

the turn lane doesn't seem needed west of Sinagua Heights, I recommend having it raised (an extension of the Butler/4th project cross section). This could be a phased add-on if the funding isn't there initially.

show a 2' buffer/furnishing strip where we don't have the full parkway (typ.), or else I worry this feature will get overlooked, it will be easier to cut this out where it really doesn't fit than sneak it into a scope that never anticipated it.

raised median here, where no turns, and to create side friction as this hill starts to hopefully calm traffic a little more.

~3.7% slope, especially if we get a median here, this could be a better candidate for an enhanced crossing (serves peds coming/going west to Sinagua and peds going between schools). PROWAG discusses cross slopes up to 5% when that matches the main road. The other issue is stopping/starting approaches if signalized. If just a flashing beacon, would be able to get up to 5% slopes. Would have to further evaluate just a flashing beacon unless we can get down to one lane in each direction and a median refuge in the center though.

20' clear (if that is goal here for fire) can be to face of curb.

Is this stop bar too far back, will cars all pull forward and block the bikeway/crossing?

trying to think through the grading here, we catch existing road at a higher grade since there is less cross-slope distance, so likely we can tie-into Fire Station driveway further back, show sidewalk further back with note to match grade vs. at ROW so later iterations can max-out what works for grading vs. thinking we are tied to ROW somehow. Bigger picture, is it worth evaluating chasing pavement to centerline and adjusting cross slope to get us even more sidewalk width? 0.5%, basically sheet flow with adequate longitudinal slope that eventually finds the gutter? or full superelevation to south, FUTS by car wash could benefit from being higher too.

as witnessed, there is demand for two-way wheeled travel between sinagua and foxglen, what are the group's thoughts on making this more of a mixing zone vs. one-way bikeway? can we get another foot + of parkway and plant trees, even if not everywhere, would we need another foot of path width? Me, and adjacently-backed by AASHTO bike guide would prioritize parkway width since 11' vs. 12' path doesn't make huge gains on LOS.

since we are leaving existing ROW and chasing grading anyway, a little bit more parkway could go a long ways. I recommend 8' (but even 6' vs. 5' will help). this can support more landscaping and create a more physical buffer (similar to further east). I also think this segment (and existing segment further east) should be set-up to carry two-way rolling traffic and having a different parkway can help signal this change of facility type (a two-way FUTS vs. a one-way separated bikeway). And evaluate matching the width of the existing 12' FUTS to help signal that this is an extension of that and expectation that it will be busier and two-way.

evaluate more of a two-way mixing zone here, like existing, vs. one-way bike

what about MAG 250 style vs pork chop, to narrow the crossing and keep FUTS above street grade?

wrap wide sidewalk up Fox Glenn St to bike lanes, then provide bike ramps to/from on-street bike lanes.

what are benefits for a more typical ramp placement to have peds/bikes wait at sidewalk level?

CONSTRUCTION NOTES

101	Remove or replace guardrail - pending further study
201	Concrete Sidewalk
202	Concrete FUTS
210	Curb & Gutter
250	Bike Entry/Exit Ramp
260	Stairs
270	Median - includes gaps for drainage
501	Scupper/Catch Basin
601	White FUTS Stripe
605	White Lane Stripe
610	Yellow Lane Stripe
620	Crosswalk
900	Relocate ex. electrical transformer from sight triangle to landscape area
901	Relocate ex. control cabinet

LEGEND

- 🟩 Bike Path
- ⬜ Pedestrian Path
- ⬜ Driveway
- 🟦 Ramp
- ⬜ Ramp & Handrail
- ▨ Detectible Warning
- ▨ Median
- 🟧 Protected Intersection (Stamped or Colored Concrete)
- ▮▮▮▮ Bike & Pedestrian Crosswalk

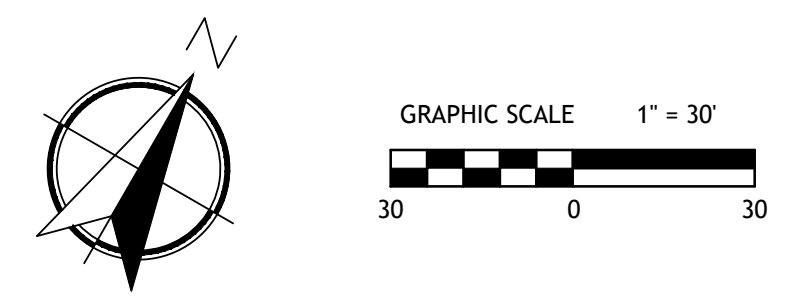
N
GRAPHIC SCALE 1" = 30'
30
0
30

EXISTING SECTION

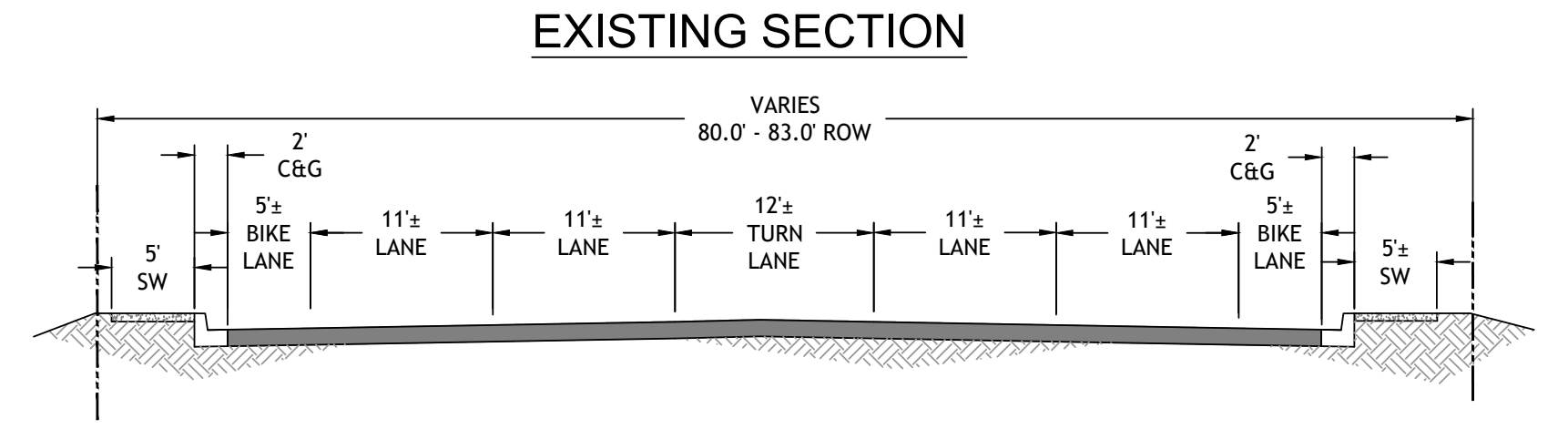
VARIES
80.0' - 83.0' ROW
5' SW
2' C&G
5'± BIKE LANE
11'± LANE
11'± LANE
12'± TURN LANE
11'± LANE
11'± LANE
5'± BIKE LANE
2' C&G
5'± SW

SECTION C

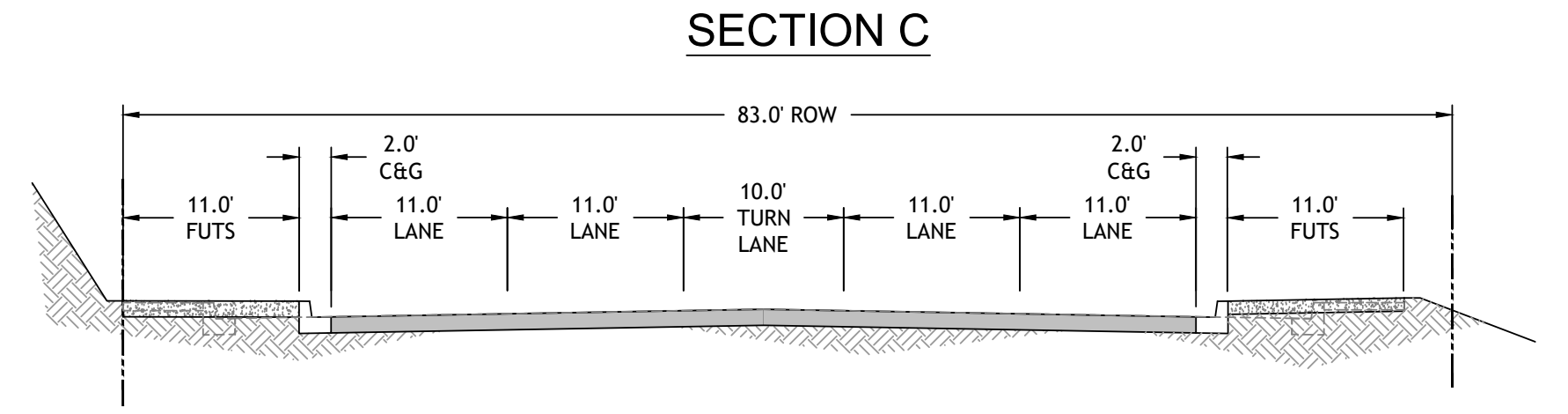
83.0' ROW
11.0' FUTS
2.0' C&G
11.0' LANE
11.0' LANE
10.0' TURN LANE
11.0' LANE
11.0' LANE
2.0' C&G
11.0' FUTS

SECTION D

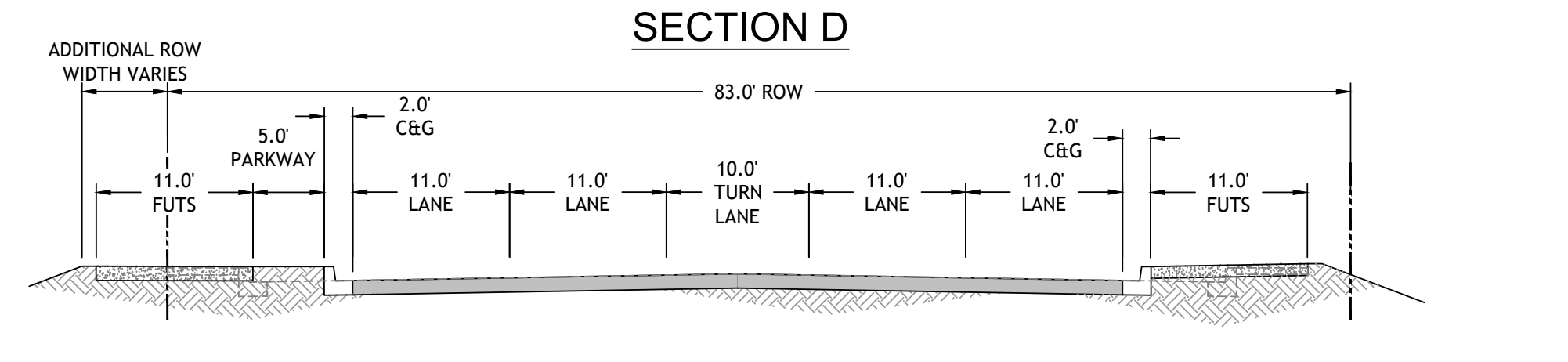
ADDITIONAL ROW WIDTH VARIES
83.0' ROW
11.0' FUTS
5.0' PARKWAY
2.0' C&G
11.0' LANE
11.0' LANE
10.0' TURN LANE
11.0' LANE
11.0' LANE
2.0' C&G
11.0' FUTS

BUTLER AVE IMPROVEMENTS

FLAGSTAFF, AZ

SECTION E

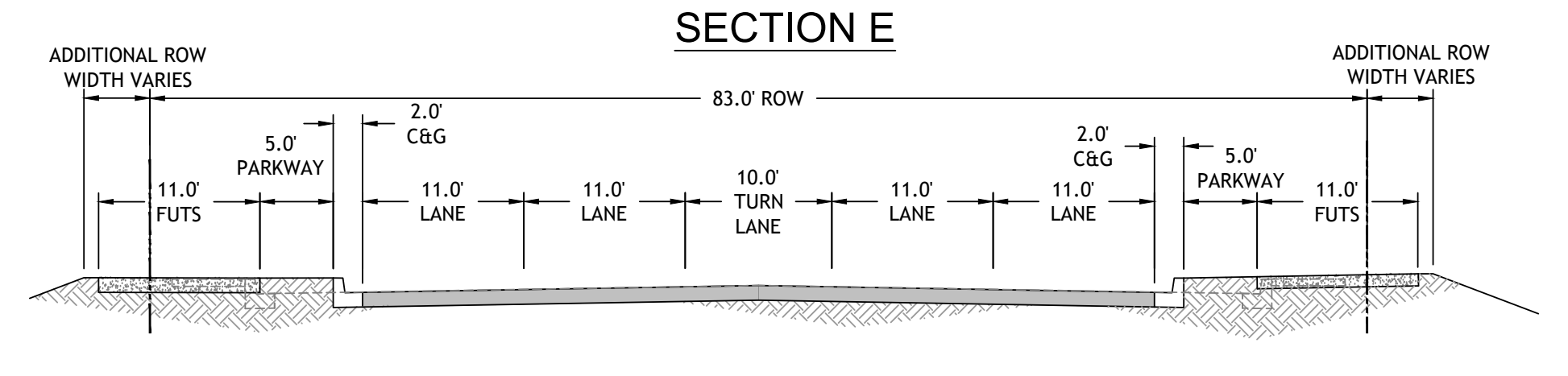
ADDITIONAL ROW WIDTH VARIES
83.0' ROW
ADDITIONAL ROW WIDTH VARIES
11.0' FUTS
5.0' PARKWAY
2.0' C&G
11.0' LANE
11.0' LANE
10.0' TURN LANE
11.0' LANE
11.0' LANE
2.0' C&G
5.0' PARKWAY
11.0' FUTS

SECTION F

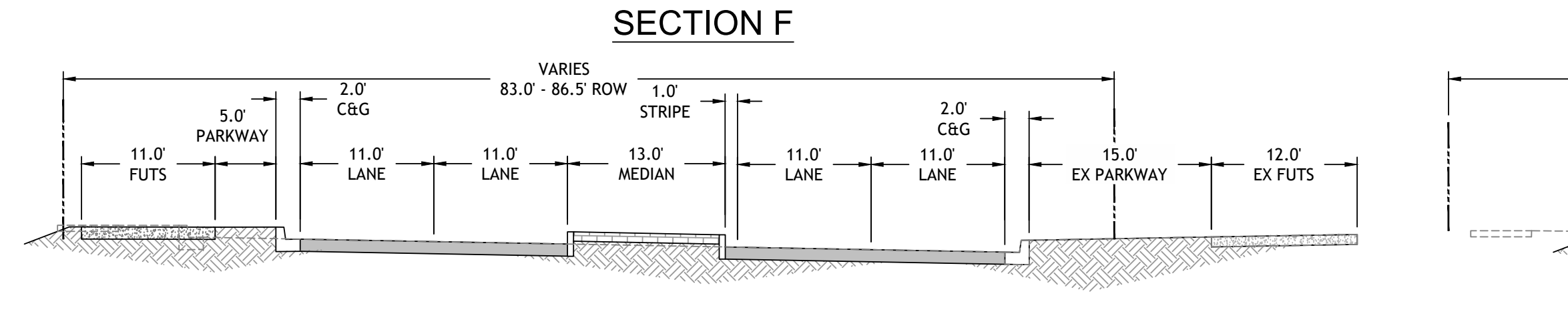
VARIES
83.0' - 86.5' ROW
11.0' FUTS
5.0' PARKWAY
2.0' C&G
11.0' LANE
11.0' LANE
1.0' STRIPE
13.0' MEDIAN
11.0' LANE
11.0' LANE
2.0' C&G
15.0' EX PARKWAY
12.0' EX FUTS

SECTION G

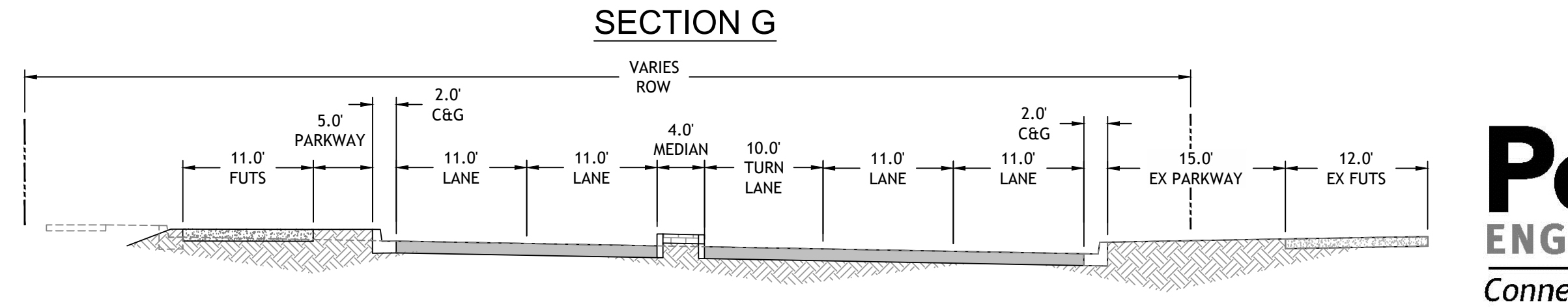
VARIES
ROW
11.0' FUTS
5.0' PARKWAY
2.0' C&G
11.0' LANE
11.0' LANE
4.0' MEDIAN
10.0' TURN LANE
11.0' LANE
11.0' LANE
2.0' C&G
15.0' EX PARKWAY
12.0' EX FUTS

MARCH 2026

Peak ENGINEERING, INC.
Connecting Place to People

NELSON NYGAARD

TYLin