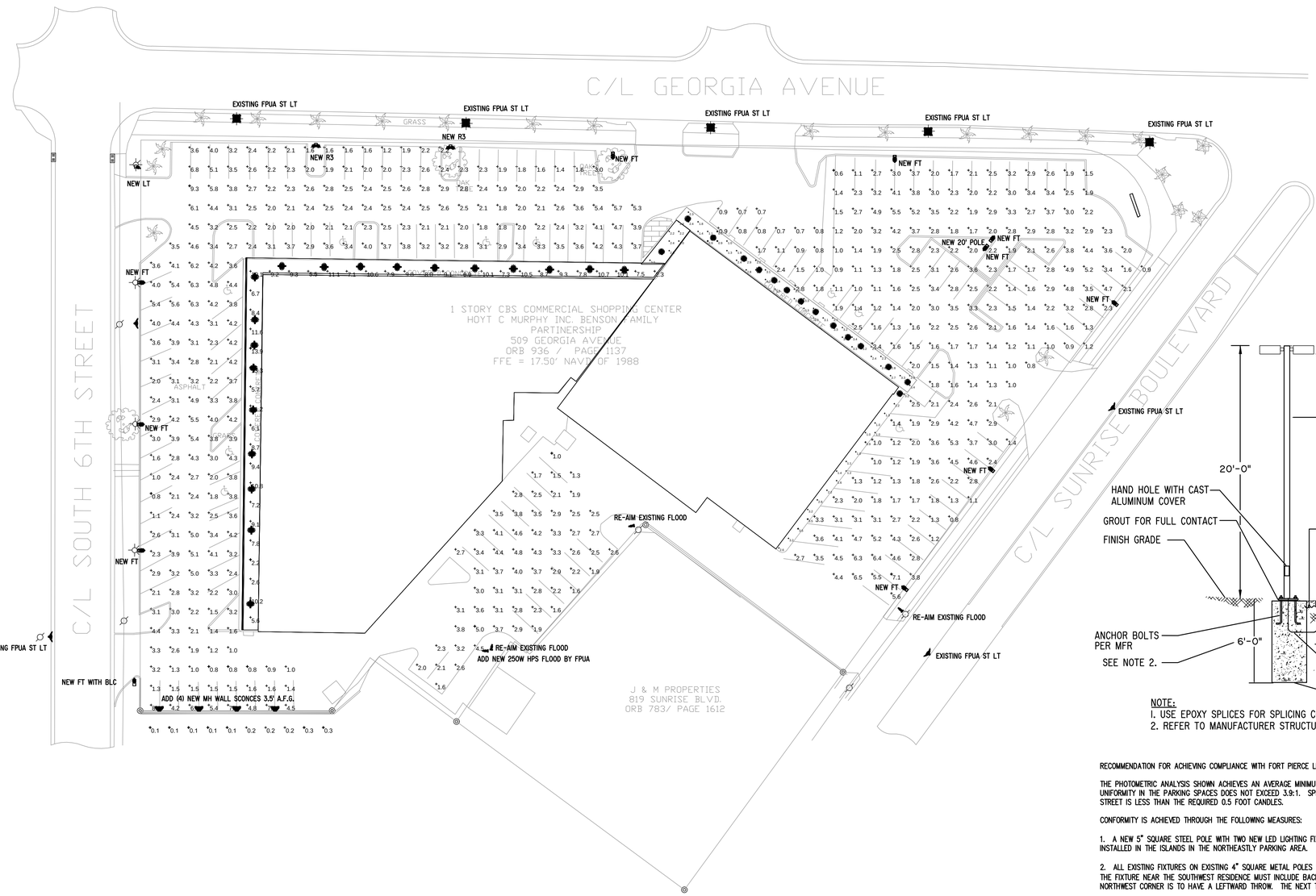

SITE LIGHTING - NEW PHOTOMETRIC PLAN

SCALE 1" = 30'-0"

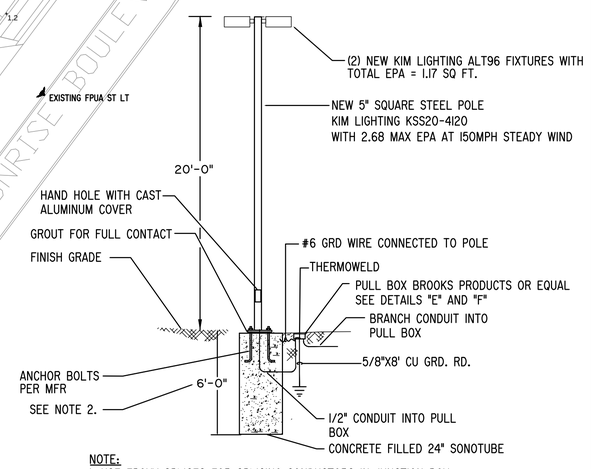

NOTE:
1. USE EPOXY SPLICES FOR SPLICING CONDUCTORS IN JUNCTION BOX.
2. REFER TO MANUFACTURER STRUCTURAL DOCUMENTATION FOR EXACT BURIAL DEPTH.

RECOMMENDATION FOR ACHIEVING COMPLIANCE WITH FORT PIERCE LIGHTING ORDINANCE

THE PHOTOMETRIC ANALYSIS SHOWN ACHIEVES AN AVERAGE MINIMUM FOOT CANDLE LEVEL IN EXCESS OF THE REQUIRED 1 FC AND UNIFORMITY IN THE PARKING SPACES DOES NOT EXCEED 3.9:1. SPILL AT THE RESIDENCE IN THE SOUTHWEST AREA ALONG 6TH STREET IS LESS THAN THE REQUIRED 0.5 FOOT CANDLES.

CONFORMITY IS ACHIEVED THROUGH THE FOLLOWING MEASURES:

1. A NEW 5" SQUARE STEEL POLE WITH TWO NEW LED LIGHTING FIXTURES WITH FORWARD THROW DISTRIBUTION IS TO BE INSTALLED IN THE ISLANDS IN THE NORTHEASTLY PARKING AREA.

2. ALL EXISTING FIXTURES ON EXISTING 4" SQUARE METAL POLES ARE REPLACED WITH NEW FORWARD THROW (FT) LED FIXTURES. THE FIXTURE NEAR THE SOUTHWEST RESIDENCE MUST INCLUDE BACKLIGHT CONTROL (BLC) AS WELL. THE FIXTURE IN THE NORTHWEST CORNER IS TO HAVE A LEFTWARD THROW. THE NEXT TWO FIXTURES TO THE EAST ARE TO HAVE R3 DISTRIBUTION.

3. AN ADDITIONAL FPUA 250W HPS FLOODLIGHT SHALL BE ADDED TO THE SOUTHERLY POLE OF THE TWO WOOD POLES IN LIGHTING THE SOUTHEASTERLY LOT AND ORIENTATIONS MUST BE ADJUSTED TO ACHIEVE UNIFORMITY AND AVOID SPILL ONTO THE SOUTHWEST RESIDENCE. ALL TILTS ARE 70 DEGREES UP FROM VERTICAL.

4. ALL EXISTING CANOPY LAMPS MUST BE BROUGHT INTO SERVICE.

5. FOUR NEW 70W METAL HALIDE OUTDOOR WALL SCONCES MUST BE ADDED TO THE FOUR FOOT HIGH CONCRETE BLOCK WALL AT THE SOUTHWEST RESIDENCE. THIS IS HOW FC AND UNIFORMITY IS ACHIEVED IN THIS AREA WITHOUT SPILL ONTO THE RESIDENCE. THE CIRCUIT FROM THE SOUTHWEST POLE SHALL BE EXTENDED THROUGH SCH 80 PVC TO THESE FIXTURES. THE CONDUIT SHALL BE PAINTED WHITE TO MATCH THE WALL.

6. THE EXISTING 250W HPS COBRA HEAD FPUA RENTAL LIGHT ALONG THE WESTERLY LINE SHALL BE REPLACED WITH A 150W MH COBRAHEAD TO MATCH NEW LIGHT COLOR AND PROVIDE UNIFORMITY.

7. TREES BRANCHES BLOCKING LIGHT MUST BE TRIMMED BACK.

NO.	DATE	REVISIONS	DR	CK	APP

Fort Pierce Engineering, Inc.
Dependable Mechanical, Electrical & Plumbing Design
C.A. No. 28173

315 South 7th Street
Fort Pierce, FL. 34950
Phone: 772 672-4636
Fax: 772 672-4637

CLIENT:
COOK & MENARD ARCHITECTURE INC.
806 DELAWARE AVE.
FORT PIERCE, FLORIDA
34950

PROJECT NAME:
SUNRISE PLAZA ARCADE

PROJECT LOCATION:
509 GEORGIA AVE.
FORT PIERCE, FLORIDA

ENGINEER SEAL

TIMOTHY C. TREWYN
LICENSE
No 61580
STATE OF FLORIDA
PROFESSIONAL ENGINEER

Timothy C. Trewyn, PE
P.E. No. 61580

THESE DOCUMENTS, ALONG WITH THE CONCEPTS AND OR DESIGNS PRESENTED HEREIN ARE INTENDED ONLY FOR THE SPECIFIC PURPOSE AND CLIENT OF FORT PIERCE ENGINEERING, INC. FOR WHICH THEY WERE PREPARED. REUSE OR IMPROPER RELIANCE ON THESE DOCUMENTS WITHOUT WRITTEN AUTHORIZATION AND ADAPTATION BY FORT PIERCE ENGINEERING, INC. SHALL BE WITHOUT LIABILITY TO THE UNDERSIGNED. COPYRIGHT FORT PIERCE ENGINEERING, INC. ALL RIGHTS RESERVED.

SHEET TITLE

SITE LIGHTING PHOTOMETRIC PLAN

ISSUE DATE: 07-17-2014

DRAWN: TCT

APPROVED: TCT

DRAWING NUMBER

E-1.2

SHEET 2 OF 2

14001-05