LOCATION MAP

AERIAL

PROJECT SCOPE:
1. REMOVE EXISTING SEAWALL CAP.
2. CONSTRUCT NEW CAP AND TIE BACKS ON EXISTING CONC. SEAWALL.

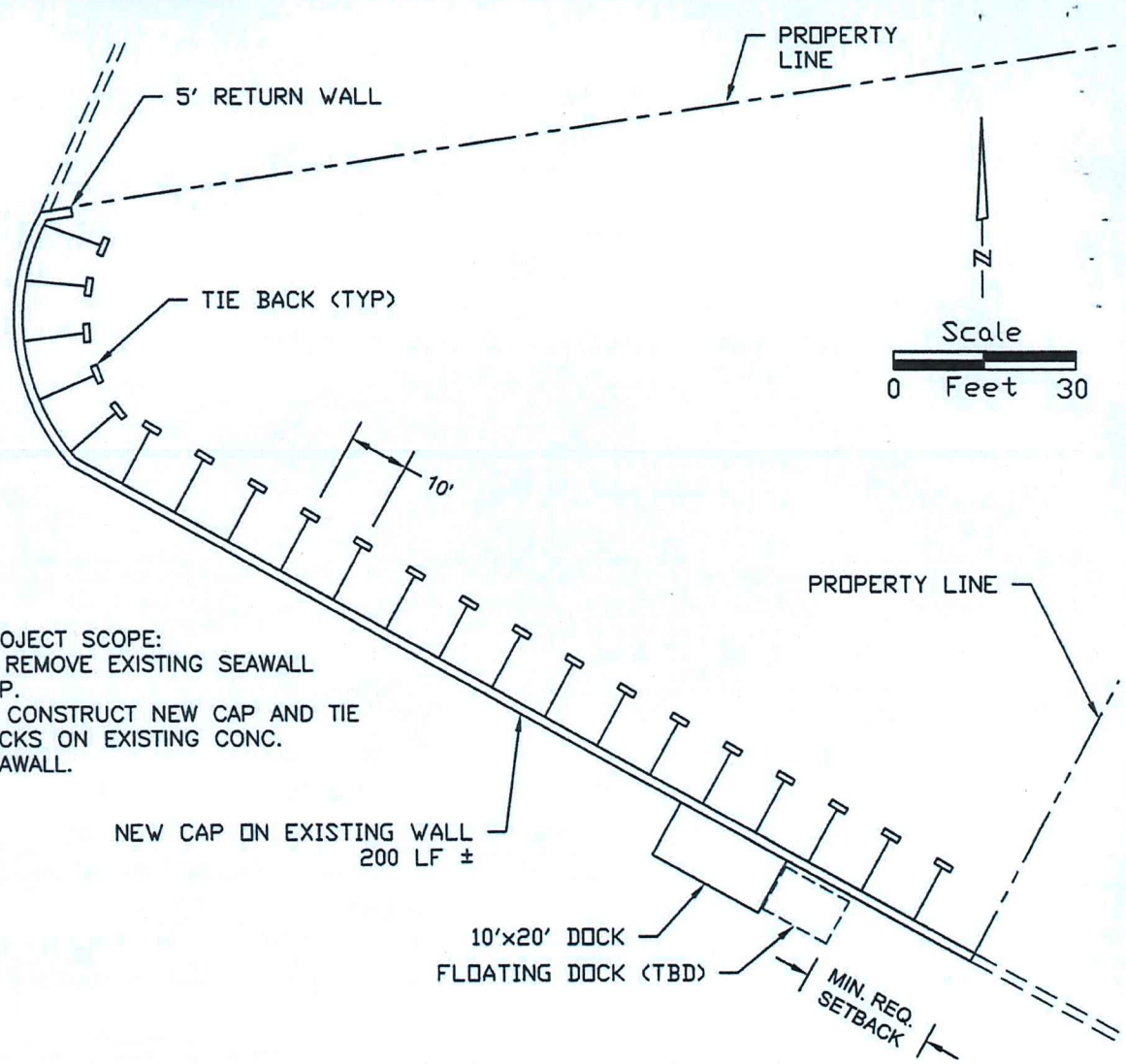

SITE PLAN
1" = 30'

MCR PROFESSIONAL ENGINEERING, INC.
OF: (561)863-3393 FX: (561)228-1318
CERTIFICATE OF AUTHORIZATION # 26967
3/10/16
MICHAEL BABER, FL PE# 52575

NEW CAP ON EXISTING SEAWALL

VERN MEYER
1703 SUNSET ISLE
FT. PIERCE, FL 34985

DATE	REVISIONS
3/10/16	INITIAL DRAWINGS COMPLETED

SHEET 1 OF 6

Proposed Docks - Aerial Representation

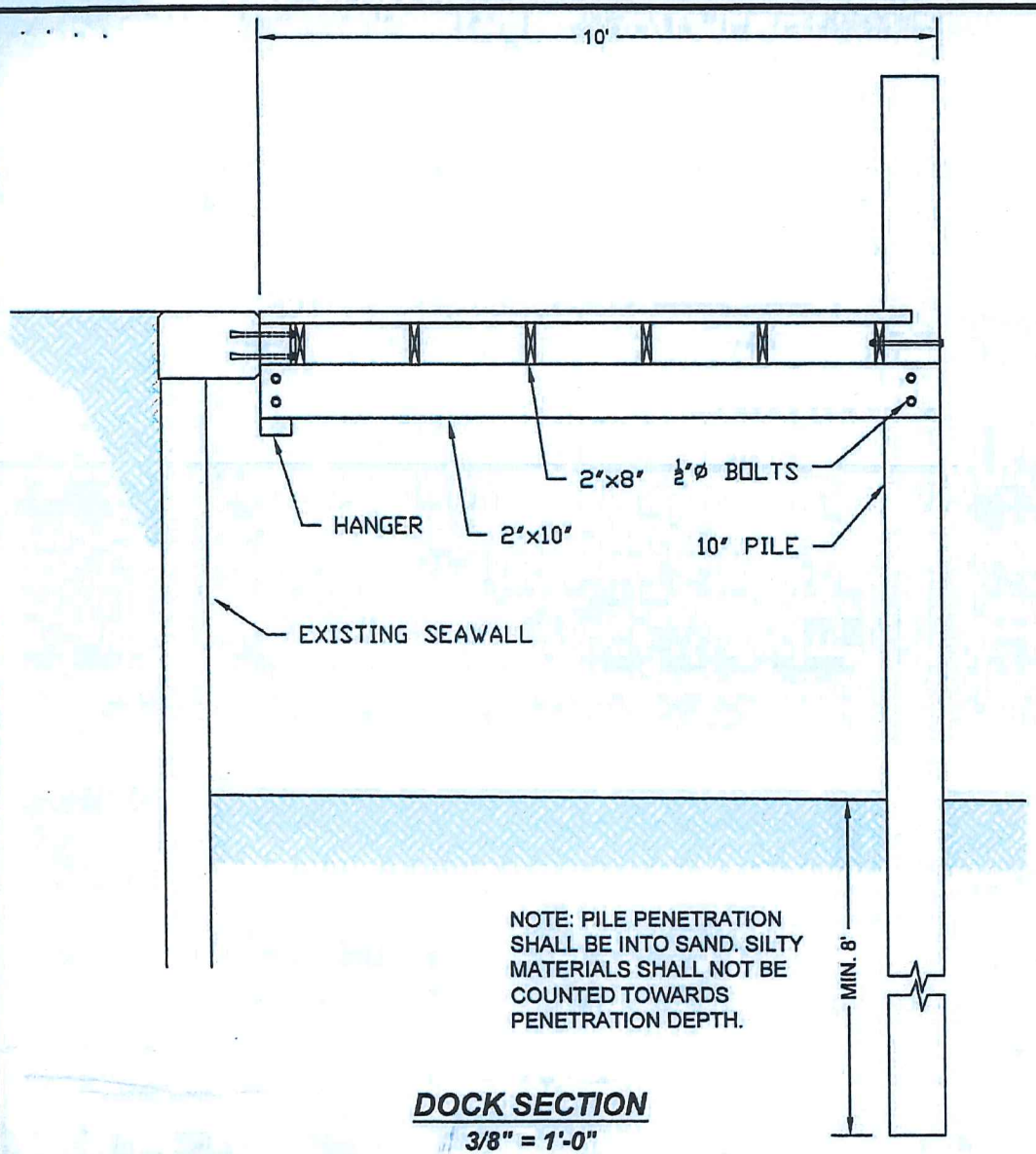

NOTE: PILE PENETRATION SHALL BE INTO SAND. SILTY MATERIALS SHALL NOT BE COUNTED TOWARDS PENETRATION DEPTH.

DOCK SECTION
3/8" = 1'-0"

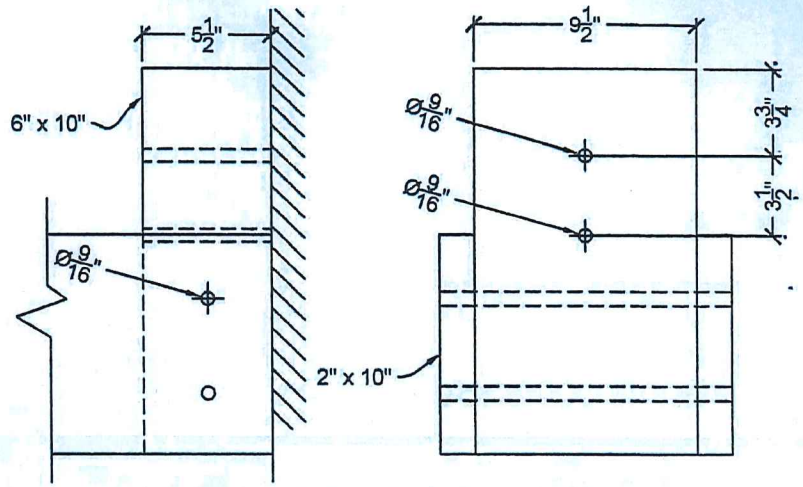

HANGER DETAILS
1-1/2" = 1'-0"

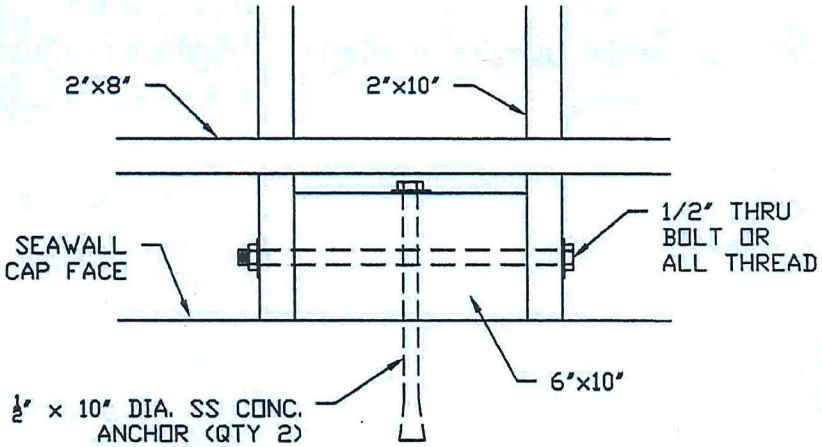

HANGER DETAIL
1/2" = 1'-0"

MCR PROFESSIONAL ENGINEERING, INC.
OF: (561)863-3393 FX: (561)228-1318
CERTIFICATE OF AUTHORIZATION #26967
03/10/16
MICHAEL BABER, FL P.E# 52575

NEW CAP ON EXISTING SEAWALL

VERN MEYER
1703 SUNSET ISLE
FT. PIERCE, FL 34985

DATE	REVISIONS
3/10/16	INITIAL DRAWINGS COMPLETED

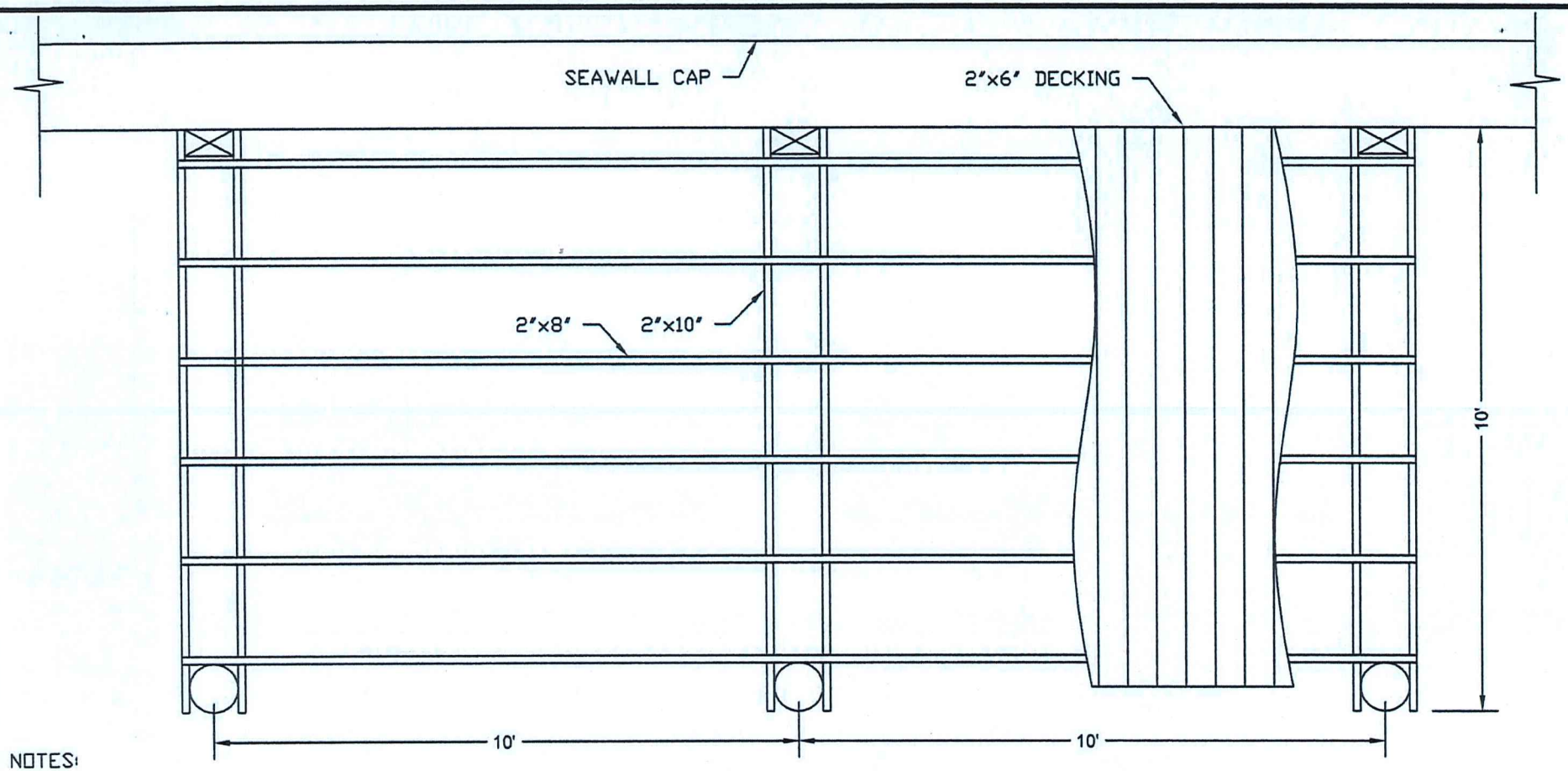

NOTES:

1. DECKING - 2"x6" WOOD. SPACE STRINGERS AS NECESSARY TO COMPLY WITH MANUFACTURER SPACING REQUIREMENT FOR OTHER DECKING MATERIALS.
2. DOCK FRAMING SHALL BE 2"x8" S.Y.P.
3. DECK FASTENERS TO BE 16d STAINLESS STEEL RING SHANK NAILS OR 3¼" HEX DRIVEN DECK SCREWS. (OR PER MANUF. SPECIFICATIONS FOR OTHER DECKING MATERIALS).
4. ALL HARDWARE TO BE STAINLESS STEEL.
5. DOCK PILES WILL BE 10"ø.
6. LUMBER TO BE PRESSURE TREATED FOR MARINE ENVIRONMENT. (ACQ OR CCA)
   0.4 LBS/CF (DECK, STRINGERS, BENTS)
   2.5 LBS/CF (PILES)
7. LUMBER TO BE #1 QUALITY SOUTHERN YELLOW PINE.

FRAMING PLAN
3/8" = 1'-0"

MCR PROFESSIONAL ENGINEERING, INC.
OF: (561)863-3393 FX: (561)228-1318
CERTIFICATE OF AUTHORIZATION # 26967
3/10/16
MICHAEL BABER, FL PE# 52575

NEW CAP ON EXISTING SEAWALL

VERN MEYER
1703 SUNSET ISLE
FT. PIERCE, FL 34985

DATE	REVISIONS
3/10/16	INITIAL DRAWINGS COMPLETED