# C I T Y  O F  F O R T  P I E R C E

## CITY COMMISSION AGENDA

Regular Meeting - Tuesday, January 2, 2018 - 6:30 p.m.
City Hall - City Commission Chambers, 100 North U.S. #1, Fort Pierce, Florida

1. **CALL TO ORDER**

2. **OPENING PRAYER - Indian River Presbyterian Church, Reverend Bryan L. Wenger**

3. **PLEDGE OF ALLEGIANCE**

4. **ROLL CALL**

5. **APPROVAL OF MINUTES**

   a. Approval of Minutes from the December 18, 2017 meeting.

6. **PROCLAMATIONS**

7. **LETTERS TO COMMISSION**

   a. Email from Erick Gill, Communications Director, St. Lucie County, thanking the City and staff (especially Shyanne Helms, Communications Manager and Joe Sweat, Marketing Specialist) for a wonderful holiday lights trolley tour.

   b. Letter from Dr. Ellen J. Meyers Gould commending the entire City Marina staff for excellent service, and in particular Becky Vasata, Customer/Store Assistant, whose service was outstanding.

   c. Email from Melissa Bagby with a special thank you to Shyanne Helms, Communications Manager and Joe Sweat, Marketing Specialist for all their hard work and for the delightful time her family had on the Holiday Light Trolley Tour.

8. **COMMENTS FROM THE PUBLIC ON AGENDA ITEMS NOT REQUIRING PUBLIC HEARINGS**

   Any person who wishes to comment on an agenda item which is not under Public Hearings on the Agenda may be heard at this time and must sign up to speak in advance. Please limit your comments to three (3) minutes or less, as directed by

the Mayor, as this section of the Agenda is limited to thirty minutes. The City Commission will not be able to take any official actions under Comments from the Public. Speakers will address the Mayor, Commissioners, and the Public with respect. Inappropriate language will not be tolerated.

9. **ADDITIONS OR DELETIONS TO AGENDA AND APPROVAL OF AGENDA**

10. **MISCELLANEOUS REPORTS**

a. Monthly Financial Report for the Month October 31, 2017

b. Monthly Financial Report for the Month Ending November 30, 2017.

c. Preliminary Fourth Quarter Financial Report

11. **CONSENT AGENDA**

a. Approval of an extension for the Planned Development (PD) Approval for the project known as Mayfair at Lawnwood, located at 1801 Nebraska Avenue. This project was originally approved on November 21st, 2017. The new date for the site plan expiration would become May 21st, 2017.

b. Approval of the installation by David Hicks of two (2) 120 gallon aboveground propane tanks at 1502 Thumb Point Dr.

c. Approval of the removal and replacement by Walmart Stores of two (2) 400 gallon, one (1) 700 gallon, one (1) 200 gallon and one (1) 25 gallon aboveground storage tanks at 5100 Okeechobee Road.

d. Approval of blanket purchase orders for Indian Hills Golf Course in the total amount of $121,000.00.

12. **PUBLIC HEARINGS**

a. Legislative Hearing - Ordinance No. 17-029 amending Chapter 15 - Signs and Billboards. SECOND READING

b. Legislative Hearing - Ordinance No. 17-039 Amending Chapter 4 - Animals to resolve issues identified by staff during the first year of enforcement efforts regarding tethering. SECOND READING

c. Review and approval of an application for Final Plat (Minor Replat), submitted by Property Owner(s) Smigiel Partners XIX Ltd. and Representative, Jason M. Gunther, P.E., to subdivide a 3.17 acre tract of land into two (2) lots, located at 4008 Okeechobee Road, Fort Pierce, FL. The property is zoned General Commercial (C-3), Parcel IDs: 2417-332-0009-000-9 & 2417-333-0001-000-6.

13. **CITY COMMISSION**

a. Resolution 18-R01 approving the Mayor's reappointment of Patricia Diaz to the Housing Authority Board.

b. Selection of Mayor Pro Tem, pursuant to Section 23 of the City Charter which requires the city commissioners to shall select one (1) of their number as Mayor Pro Tem at the first regular meeting following January 1.

14. **COMMENTS FROM THE PUBLIC**

Any person who wishes to comment on any subject may be heard at this time. Please limit your comments to three (3) minutes or less, as directed by the Mayor, as this section of the Agenda is limited to thirty minutes. The City Commission will not be able to take any official actions under Comments from the Public. Speakers will address the Mayor, Commissioners, and the Public with respect. Inappropriate language will not be tolerated.

15. **COMMENTS FROM THE CITY MANAGER**

a. City Manager's Report

16. **COMMENTS FROM THE COMMISSION**

17. **ADJOURNMENT**

Pursuant to Section 286.0105, Florida Statutes, the City hereby advises you that if you or another person decide to appeal any decision made by the City Commission with respect to any matter considered at its meeting or hearing, that you or said person will need a record of the proceedings, and that for such purpose, affected persons may need to insure that a verbatim record of the proceedings is made, which record includes the testimony and evidence upon which the appeal is to be based. This notice does not constitute consent by the City for the introduction or admission into evidence of otherwise inadmissible or irrelevant evidence, nor does it authorize challenges or appeals not otherwise allowed by law.

In accordance with the Americans with Disabilities Act and Section 286.26, Florida Statutes, persons with disabilities needing special accommodation to participate in this meeting should contact the City Clerk’s Office at (772) 467-3065 at least 48 hours prior to the meeting.

**City Commission Regular Meeting** **5.a.**

**Meeting Date:** 01/02/2018

**Re:**

---

**SUBJECT:**

Approval of Minutes from the December 18, 2017 meeting.

---

## Attachments

12.18.2017

---

## Form Review

Form Started By: Linda Cox Started On: 12/22/2017 11:00 AM

Final Approval Date: 12/22/2017

MINUTES OF A REGULAR MEETING OF THE CITY COMMISSION OF THE CITY OF FORT PIERCE, FLORIDA, HELD IN THE CITY HALL COMMISSION CHAMBERS, 100 NORTH U.S. #1, FORT PIERCE, FLORIDA, AT 6:30 P.M. ON MONDAY, **DECEMBER 18, 2017.**

**1.** **6:15 p.m. - SPECIAL PRESENTATION** - Holiday Music with the Boys and Girls Club of St. Lucie County

**6: 30 p.m. - CALL TO ORDER**

**2.** **OPENING PRAYER -** Reverend Dr. Kenny Mills, The Bible Way Save Our Children Ministries

**3.** **PLEDGE OF ALLEGIANCE**

**4.** **ROLL CALL**

Present: Mayor Linda Hudson; Commissioner Jeremiah Johnson; Commissioner Thomas Perona; Commissioner Reginald Sessions

Absent: Commissioner Rufus Alexander

Staff Present: City Attorney James Messer
City Clerk Linda Cox
City Manager Nicholas Mimms

**5.** **APPROVAL OF MINUTES**

a. Approval of Minutes from the December 4, 2017 regular meeting.

Motion was made by Commissioner Jeremiah Johnson, seconded by Commissioner Thomas Perona to approve item 5 a.

AYE: Mayor Linda Hudson, Commissioner Jeremiah Johnson, Commissioner Thomas Perona, Commissioner Reginald Sessions

Passed

6. **PROCLAMATIONS**

Mayor Hudson issued Proclamations to the following individuals listed below.

a. Sergeant Daniel Flaherty

b. Sergeant Rodney Nieves

c. Lieutenant Katherine England

7. **LETTERS TO COMMISSION**

The following letters will be kept on file in the City Clerk's Office.

a. Email from Dorothy Ingram thanking Chief Hobley-Burney for Officer Fossella and other police officers who are dependable and spoke at her church.

b. Letter from Pamela L. Gillette, Marketing and Events, Main Street Fort Pierce, thanking Mayor Hudson, Nick Mimms, City Commissioners, Public Works Department and the Police Department for their support of Sights and Sounds on Second Festival and Parade.

c. Letter of commendation to Kori Benton, Senior Planner from Commissioner Alexander acknowledging Mr. Benton's exemplary work for the City of Fort Pierce.

8. **COMMENTS FROM THE PUBLIC ON AGENDA ITEMS NOT REQUIRING PUBLIC HEARINGS**

There were no public comments.

9. **ADDITIONS OR DELETIONS TO AGENDA AND APPROVAL OF AGENDA**

Motion was made by Commissioner Reginald Sessions, seconded by Commissioner Jeremiah Johnson to approve the Agenda as presented.

AYE: Mayor Linda Hudson, Commissioner Jeremiah Johnson, Commissioner Thomas Perona, Commissioner Reginald Sessions

Passed

## 10. MISCELLANEOUS REPORTS

There were no reports.

## 11. CONSENT AGENDA

a. Approval of a $100 holiday bonus pay to each employee.

b. Approval of the 2017 Bullet Proof Vest Program (BVP) Blanket Purchase Order Request in an amount not to exceed $30,396.08.

c. Approval to purchase twelve (12) DELL Rugged Laptop computers at a cost of $1,659.78 each for a total not to exceed $20,000. The police department is proposing to piggyback the U.S. Communities Contract No. 43211500-WSCA-15-ACS, from Dell Computers, Round Rock, TX.

d. Approval to purchase up to three (3) K-9's for the Fort Pierce Police Department K-9 Unit in the amount not to exceed $30,000.

e. Approval to purchase two (2) Ford Interceptor Sport Utility vehicles for the Fort Pierce Police Department K-9 Unit in the amount not to exceed $78,218.00.

f. Approval of an extension for the Planned Development (PD) Approval for the project commonly known as Villages of Midway, located on northside of Midway Road and west of I-95. This project was originally approved on April 4, 2016 via Ordinance No. 16-009. The new date for the site plan expiration would become April 7, 2020.

g. Approval of a twenty-four (24) month Lease Extension Agreement between the City of Fort Pierce and Fort Pierce Resorts, LLC for certain parcels along Indian River Drive, that are being utilized to provide additional parking spaces for the public.

Motion was made by Commissioner Jeremiah Johnson, seconded by Commissioner Reginald Sessions to approve items 11 b - 11 g.

AYE: Mayor Linda Hudson, Commissioner Jeremiah Johnson, Commissioner Thomas Perona, Commissioner Reginald Sessions

Passed

As to item 11 a, Commissioner Johnson requested his $100 bonus as a City employee be removed. Commissioner Sessions, Commissioner Perona and Mayor Hudson requested the same.

Motion was made by Commissioner Jeremiah Johnson, seconded by Commissioner Thomas Perona to approve item 11 a with the exception of the Mayor and City Commission.

AYE: Mayor Linda Hudson, Commissioner Jeremiah Johnson, Commissioner Thomas Perona, Commissioner Reginald Sessions

Passed

## 12. PUBLIC HEARINGS

a. Presentation and Public Hearing of 2016-2017 Consolidated Annual Performance Evaluation Report (CAPER).

Elizabeth “Libby” Woodruff, Grant Writer Administrator, introduced the new Lincoln Park Revitalization Coordinator, Caleta Scott, who has been with the department since September 2017. Ms. Woodruff proceeded to present the accomplishments and highlights of the CAPER. With the SHIP Program six home purchases were made with 11 more home purchases underway. Three home rehabs were completed and five more are currently underway. In partnership with the FPUA, the Weatherization Program has helped to rehab 27 homes. The Paint Our Town Program, in conjunction with businesses who volunteer within our community, were able to paint homes and change locks on some of these helping 19 home owners. For Small Business Development, workshops were presented to educate small business owners and grants were provided to businesses that qualified. Through the Public Service Grants 5,787 people were served. The Third Annual Summer Jam Camp provided free camp for eight weeks, five days a week and it created seven summer jobs.

There was also a promotion of Free Job Training, along with a Job Fair. The next 3rd Annual Job Fair will take place on January 31, 2018 at the Havert L. Fenn Center and 100 employers will be present. Five Commercial Façade Grants are underway. The 3rd Annual Highwaymen Art Show & Festival will be on Saturday, February 17, 2018 at 10 a.m. at the Moore's Creek Linear Park. Improvements were also made to the Maravilla Park, as well as, Percy Peek Gymnasium.

Mayor Hudson opened the Public Hearing.
Seeing no one, the Mayor closed the Public Hearing.

b. An application for Waiver of Distance submitted by the property owners, Fifer Partners 1 LLC, and applicant/representative, Brian Paul, for approval of Waiver of Distance for a 2COP Alcoholic Beverage License in order to serve Beer and Wine for Consumption on Premises, within a proposed restaurant, at 733 North US Highway 1, Fort Pierce, Florida. The property is zoned General Commercial, C-3, and approximately 2.94 acres in size. The Parcel IDs for the property is 2403-717-0002-000-8, 2403-705- 0024-000-1, & 2403-717-0007-000-3.

Senior Planner, Kori Benton, mentioned the applicant is requesting an alcoholic license with a new restaurant proposed as an expansion of the Pelican Seafood retail store. This restaurant would be approximately 1,200 square feet, accommodating 40 patrons and would include a kitchen, office, restroom facilities and outdoor dining.

Staff unanimously recommended approval of this request with the following conditions:
(1) The proposed parking lot expansion, to support the restaurant and plaza, complies with minimum dimensions, curbing, and drainage provisions of City ordinance;
(2) Site landscaping is in compliance with City Code Sections 22-187 General landscaping requirements (4), (6), and (7). , prior to zoning release of the alcohol license.
(3) Site lighting is affirmed to be in compliance with City Code Sections Sec. 22-60 (j) & Sec. 22-59 (g)(6) Lighting, providing a minimum average of two (2) foot candle lighting, prior to zoning release of the alcohol license; and
(4) The presented dumpster enclosure is screened with landscaping, pursuant to City Code Section 22-187 (11) Screening of refuse collection areas, prior to zoning release of the alcohol license.

Mayor Hudson opened the Public Hearing.
Brian Paul, the applicant, presented himself to answer any questions.
Commissioner Perona asked if Mr. Paul was moving his other restaurant to the current location they were speaking of. He is not.
No one else had questions.
Seeing no one else, the Mayor closed the Public Hearing.

Motion was made by Commissioner Reginald Sessions, seconded by Commissioner Jeremiah Johnson to approve Item 12 b with staff conditions.

AYE: Mayor Linda Hudson, Commissioner Jeremiah Johnson, Commissioner Thomas Perona, Commissioner Reginald Sessions

Passed

c. Review and approval of a Conceptual Development Plan submitted by property owners, Oleander Oaks LLC. and representative Ryan Von Weller of Warwick Commons Ltd, which conceptualizes establishment of an 80-100 unit affordable housing complex exclusively for seniors 55 and older, located on the west side of Oleander Avenue, south of Bell Avenue, and north of Tumblin Kling Road in Fort Pierce, Florida. The property is zoned R-4 Medium Density Residential (south 12.88 acres) and C-3, General Commercial (north 4.3 acres). The development of this project would commence on the south 12.88 acres zoned R-4. The parcel ID for the property is 2433-144-0001-000-6

Planning Analyst, Brandon Creagan, stated the applicant is looking to develop an affordable housing complex for Seniors 55 years of age and older in the Southern half lot consisting of 12.88 acres. This product is for independent living and would produce a minimum of 80 to a maximum of 100 units (approximately 10 units per acre) which will consist of a mix between one bedroom and one bath units to two bedrooms and two bathroom units. Amenities to be included would be a pool, outdoor recreation area, common dining area, a movie room, amongst other things. Onsite management will be provided. The building is proposed with the allowable height of three stories and elevators are part of the plan.

Staff recommends that the City Commission review the Conceptual Development Plan and approve the conceptual parameters of the proposal.

Mayor Hudson opened the Public Hearing.
Kevin Kroll, Development Associate with Wendover Housing Partners, the applicant's

developer and representative, presented himself to answer any questions. He assured the City Commission that they'd design and build 100% to the City's specifications, zoning, comprehensive plan, development code and design standards. At Commissioner Session's request, Mr. Kroll went into the details of the difference between independent and assisted living.
Rosemary Spietz asked the distance between this property and Tumblin Kling Road and Mr. Kroll replied it is about 900 feet North.
Seeing no one else, the Mayor closed the Public Hearing.

Motion was made by Commissioner Reginald Sessions, seconded by Commissioner Thomas Perona to approve item 12 c with staff recommendations.

AYE: Mayor Linda Hudson, Commissioner Jeremiah Johnson, Commissioner Thomas Perona, Commissioner Reginald Sessions

Passed

d. Legislative Hearing - Ordinance 17-037 amending Chapter 5 - Buildings and Building Regulations, Section 5-19(a) in order to remove the Director of Building and Community Response from the Board of Examiners of Contractors. SECOND READING City Clerk, Linda Cox, introduced the ordinance, read by title only, into the record.

AN ORDINANCE OF THE CITY COMMISSION OF THE CITY OF FORT PIERCE, FLORIDA AMENDING CHAPTER 5 - BUILDINGS AND BUILDING REGULATIONS, SEC. 5-19 (a) IN ORDER TO REMOVE THE DIRECTOR OF BUILDING AND COMMUNITY RESPONSE FROM THE BOARD OF EXAMINERS OF CONTRACTORS; PROVIDING FOR A SEVERABILITY CLAUSE; PROVIDING FOR REPEAL OF ORDINANCES OR PARTS THEREOF IN CONFLICT; AND PROVIDING FOR AN EFFECTIVE DATE.

Mayor Hudson opened the Public Hearing.
Seeing no one, the Mayor closed the Public Hearing.

Motion was made by Commissioner Thomas Perona, seconded by Commissioner Reginald Sessions to approve item 12 d.

AYE: Mayor Linda Hudson, Commissioner Jeremiah Johnson, Commissioner Thomas Perona, Commissioner Reginald Sessions

Passed

e. Legislative Hearing - Ordinance No. 17-029 amending Chapter 15 - Signs and Billboards. FIRST READING

City Clerk, Linda Cox, introduced the ordinance, read by title only, into the record.

AN ORDINANCE OF THE CITY COMMISSION OF THE CITY OF FORT PIERCE, FLORIDA AMENDING THE PROVISIONS OF FORT PIERCE CODE OF ORDINANCES CHAPTER 15 – SIGNS AND BILLBOARDS, SEC 1 DEFINITIONS BY AMENDING THE DEFINITION OF A MURAL AND SEC. 15-7 PERMITTED SIGNS BY ESTABLISHING SIGN SIZES FOR R4, R4A AND R5 ZONING DISTRICTS; PROVIDING FOR A SEVERABILITY CLAUSE; REPEALING ALL ORDINANCES OR PARTS THEREOF IN CONFLICT HEREWITH; AND PROVIDING FOR AN EFFECTIVE DATE.

Code Enforcement Manager, Peggy Arraiz, followed up on the discussion with the City Commission from a few months ago, amending the Scrivener's error in Chapter 15 that would allow signs up to 32 sq. ft. in the R4, R4A and R5 zones. This was amended to allow large signs in areas consisting of 1 acre or more. Anything smaller would have small signs per residential areas. Our mural definition has also been amended to differentiate from an artist by trade and a painting contractor. If, as an artist, you have authority from the building owner, there will be no permits needed to paint a mural. However, if it is a historical structure the artist or building owner would have to go through the Historical Preservation Officer to acquire approval.

Motion was made by Commissioner Jeremiah Johnson, seconded by Commissioner Thomas Perona to approve item 12 e.

AYE: Mayor Linda Hudson, Commissioner Jeremiah Johnson, Commissioner Thomas Perona, Commissioner Reginald Sessions

Passed

f. Legislative Hearing - Ordinance No. 17-039 Amending Chapter 4 - Animals to resolve issues identified by staff during the first year of enforcement efforts regarding tethering. FIRST READING

City Clerk, Linda Cox, introduced the ordinance, read by title only, into the record.

AN ORDINANCE AMENDING THE CODE OF ORDINANCES OF THE CITY OF FORT PIERCE, FLORIDA; CHAPTER 4 – ANIMALS; AMENDING ARTICLE I – GENERAL; SEC. 4-1 – DEFINITIONS, AMENDING ARTICLE II – ANIMAL CONTROL; SEC. 4-22 – RESTRAINT OF ANIMALS, GENERALLY; PROVIDING FOR A SEVERABILITY CLAUSE; AND REPEALING ORDINANCES OR PARTS THEREOF IN CONFLICT HEREWITH; AND PROVIDING FOR AN EFFECTIVE DATE. FIRST READING

Code Enforcement Manager, Peggy Arraiz, followed up on the discussion with the City Commission about amending the animal tetering ordinance. This ordinance will be amended to state the person in charge of the animal will have to be 15 years of age or older, will have to be outside with the tethered animal and increases the violation penalty to $100. Commissioner Perona thanked staff for their efforts in making these amendments.

Mayor Hudson opened the Public Hearing.
Janice Douglas with United For Animals, thanked the Commission for these amendments and said they looked forward to working with the City to enforce these amendments.
Seeing no one else, the Mayor closed the Public Hearing.

Motion was made by Commissioner Thomas Perona, seconded by Commissioner Jeremiah Johnson to approve item 12 f.

AYE: Mayor Linda Hudson, Commissioner Jeremiah Johnson, Commissioner Thomas Perona, Commissioner Reginald Sessions

Passed

**13. CITY COMMISSION**

a. Resolution 17-R42 to the Florida Department of Transportation (FDOT) showing the City Commission's support for the inclusion of an observation deck into the design and construction of the North Causeway Bridge Replacement project.

City Clerk Linda Cox introduced the resolution, read by title only, into the record.

A RESOLUTION OF THE CITY COMMISSION OF THE CITY OF FORT PIERCE, FLORIDA, SUPPORTING THE CONSTRUCTION OF AN OBSERVATION DECK UNDER THE WESTERN END OF THE REPLACEMENT STATE ROAD A1A NORTH CAUSEWAY BRIDGE, COMMITTING TO THE MAINTENANCE OF THE OBSERVATION DECK UPON THE COMPLETION OF ITS CONSTRUCTION; AND PROVIDING AN EFFECTIVE DATE.

City Engineer, Jack Andrews, elaborated on the resolution and expressed why the City is supporting this structure. Mr. Andrews mentioned they'd met with FDOT regarding the possibility of keeping the same structure or opting for the proposed observation deck. The Engineering Department met with several representatives to compare the maintenance costs from the old structure to the new one in order to make the best decision possible. With projected annual maintenance costs of $75K to $100K, the City Engineer felt it would be a continuous maintenance problem for the City for years to come. Therefore, they convened with the Transportation Planning Organization (TPO) to request FDOT to produce the new structure. This structure would be similar to what has been done in other municipalities like Vero and Jensen Beach. The City and the TPO feel it's an appropriate cost for FDOT to consume and build something new versus the City continuously investing funds to maintain the old structure. This resolution shows the support of the City to have the FDOT explore this new observation deck.

Motion was made by Commissioner Reginald Sessions, seconded by Commissioner Jeremiah Johnson to approve item 13 a.

AYE: Mayor Linda Hudson, Commissioner Jeremiah Johnson, Commissioner Thomas Perona, Commissioner Reginald Sessions

Passed

b. Request for letter in support of redevelopment of Brownfield Site ID #BF560702001 located at 1150 South U.S. Highway 1, Ft. Pierce, FL 34950 (Parcel 2415-602-0002-000-2)

Planning Director, Rebecca Grohall, stated the same property owner of the ALDI store that opened this month purchased the site located at 1150 South U.S. Highway 1 with the impression that the remediation was complete but later discovered there was still contamination present and in order to proceed with the Brownfield designation and remediation, they are requesting the City's support in the form of a letter to go to the State of Florida indicating said support of this parcel as a Brownfield remediation site. This would be at no cost to the City and in return, this will enable future developments on that parcel, thus generating economic development opportunities.

Motion was made by Commissioner Reginald Sessions, seconded by Commissioner Jeremiah Johnson to approve item 13 b.

AYE: Mayor Linda Hudson, Commissioner Jeremiah Johnson, Commissioner Thomas Perona, Commissioner Reginald Sessions

Passed

c. Follow-up discussion of the Planning Board membership led by Commissioner Johnson.

Commissioner Perona mentioned he'd met with Mr. Robert Burdge and made a plea to the Commission that Mr. Burdge remain on the Planning Board. He stated Mr. Burdge brings an enormous value to the Planning Board that he would have a difficult time replacing. He feels strongly past issues came about with Mr. Burdge being Chairman and the stresses this position poses. Commissioner Johnson thanked Commissioner Perona for speaking to his appointee.

**14. COMMENTS FROM THE PUBLIC**

Marcia Baker

**15. COMMENTS FROM THE CITY MANAGER**

City Manager, Nicholas Mimms, said Commissioner Alexander did reach out to him and, while he was unable to attend the Commission Meeting, he is fine in health.
Mr. Mimms mentioned, between the developer of the new ALDI, the State of Florida and the City of Fort Pierce the project was completed in record time and the structure has brightened up the corner at which it proudly stands. Furthermore, he had the opportunity to attend Christmas at Moore's Creek which was a successful event and, additionally, when he was in Downtown Fort Pierce he saw it was completely filled with people enjoying the dancing lights at the Marina Square. Mr. Mimms proceeded to remind the Commission that the Beach does not have ample parking and the parking opportunities will have to be explored soon.

City Attorney, James Messer, echoed Mr. Mimms' words and said from his perspective, this past year had been very productive and progressive and he looks forward to doing more in the New Year. He wished all a Merry Christmas.

**16. COMMENTS FROM THE COMMISSION**

Commissioner Sessions expressed the same way he's seen the Pelican Plaza go from two occupants to being fully occupied, he is positive this result will replicate itself throughout the City. He commended Staff for their efforts and hard work this year. Additionally, he announced the County Commission's approval of the County's $25 million investment in the Indian River Terminal. He wished all a very Merry Christmas.

Commissioner Perona revisited the topic of possibly switching the Conference Agenda morning meetings to a 4 p.m. meeting and a Regular Commission Meeting to a 9 a.m. meeting (the current Conference Agenda Meeting time). He did not want to make any decisions now and simply said it was something to consider.

Commissioner Johnson congratulated all Staff for their arduous work this year and said he is excited about all the positive things occurring in our community. He is looking forward to even greater things in 2018 and implementing new ideas.

Mayor Hudson mentioned the Treasure Coast Regional League of Cities launched a public education campaign called "Our Community, Our Decisions" and she asked that all support this campaign for local City government. Additionally, the Constitutional Revision Commission has three proposals, these being Proposal 61 restricting Legislature's ability to restrict Home Rule powers, Proposal 92 speaking of unfunded mandates and trying to restrict the Legislature from passing on unfunded mandates to Cities and Proposal 51 which would deregulate

utilities. All three are in committees right now. Also, she is happy to see how much the City of Lights contest has received so much support. Lastly, the City of Fort Pierce won an award from the Treasure Coast Regional League of Cities for the most ingenious 2017 selfie campaign. The Mayor ended her comments thanking the Citizens and Staff for their support and love of community.

**17. ADJOURNMENT**

ATTEST:

| | |
|---|---|
| CITY CLERK | MAYOR COMMISSIONER |

**City Commission Regular Meeting** **7.a.**

**Meeting Date:** 01/02/2018

**Re:** Email from Erick Gill

**Submitted For:** Nick Mimms, City Manager, City Manager

---

**SUBJECT:**

Email from Erick Gill, Communications Director, St. Lucie County, thanking the City and staff (especially Shyanne Helms, Communications Manager and Joe Sweat, Marketing Specialist) for a wonderful holiday lights trolley tour.

---

## Attachments

Email from Erick Gill

---

## Form Review

| Inbox | Reviewed By | Date |
|---|---|---|
| City Manager | Nick Mimms | 12/22/2017 12:08 PM |
| City Manager | Nick Mimms | 12/22/2017 12:08 PM |
| Form Started By: Jennifer Robinson | | Started On: 12/22/2017 10:05 AM |
| Final Approval Date: 12/22/2017 | | |

To: Jennifer D Robinson/cfp@cfp,
Cc: Joe Sweat/cfp@CFP, Shyanne Helms/cfp@cfp, Kevin Browning/cfp@CFP,
Bcc:
Subject: Fw: Holiday Trolley Tour
From: Nicholas Mimms/cfp - Friday 12/22/2017 09:35 AM

History: This message has been replied to.

To: "'rsessions@city-ftpierce.com'" <rsessions@city-ftpierce.com>, "'ralexander@city-ftpierce.com'" <ralexander@city-ftpierce.com>, "'tperona@city-ftpierce.com'" <tperona@city-ftpierce.com>, "'Linda Hudson (LHudson@City-FtPierce.Com)'" <LHudson@City-FtPierce.Com>, "'jjohnson@city-ftpierce.com'" <jjohnson@city-ftpierce.com>, "'nmimms@city-ftpierce.com'" <nmimms@city-ftpierce.com>, "'Shyanne Helms (SHelms@City-FtPierce.Com)'" <SHelms@City-FtPierce.Com>, Joe Sweat <jsweat@city-ftpierce.com>

From: Erick Gill <gille@stlucieco.org>

Date: 12/21/2017 02:18PM

**Subject: Holiday Trolley Tour**

Mayor and Commissioners,

I just wanted to drop a note to say “thank you” to the city and staff (especially Shyanne & Joe) for the wonderful holiday lights trolley tour. This is coming from me as a city resident and not another “local government official.”

My wife and kids took the tour last night and it was a wonderful way to get into the holiday spirit. Joe & Shyanne did an excellent job of keeping the bus entertained and engaged. Hopefully, this becomes a new Fort Pierce tradition. And for staff’s sake, I hope they get some comp time in return.

Merry Christmas and Happy New Year!

**ERICK GILL| Communications Director | Communications Division**
Ph: 772-462-1791 | Cell: 772-342-6014 | 2300 Virginia Ave. Fort Pierce 34982

facebook.com/stluciegov | twitter.com/stluciegov | instagram.com/stluciegov | youtube.com/stluciegov

Please Note: Florida has very broad public records laws. Most written communications to or from County officials regarding County business are public records available to the public and media upon request. It is the policy of St. Lucie County that all County records shall be open for personal inspection, examination and / or copying. Your e-mail communications will be subject to public disclosure unless an exemption applies to the communication. If you received this email in error, please notify the sender by reply e-mail and delete all materials from all computers.

**City Commission Regular Meeting** **7.b.**

**Meeting Date:** 01/02/2018

**Re:** Letter from Dr. Ellen J. Meyers Gould

**Submitted For:** Nick Mimms, City Manager, City Manager

---

**SUBJECT:**

Letter from Dr. Ellen J. Meyers Gould commending the entire City Marina staff for excellent service, and in particular Becky Vasata, Customer/Store Assistant, whose service was outstanding.

---

## Attachments

Letter from Dr. Ellen J. Meyers Gould

---

## Form Review

| Inbox | Reviewed By | Date |
|---|---|---|
| City Manager | Nick Mimms | 12/22/2017 12:08 PM |
| City Manager | Nick Mimms | 12/22/2017 12:08 PM |

Form Started By: Jennifer Robinson Started On: 12/22/2017 10:35 AM

Final Approval Date: 12/22/2017

City Manager Nick Mimms
City Manager of Ft. Pierce, Florida
PO Box 1480
Fort Pierce, Florida 34954

Dear Mr. Mimms,

My husband and I have travelled for the past year on our tugboat, Gypsy Spirit. Ergo, we have had the pleasure of staying in many different marinas. We want you to know that to date, your Fort Pierce City Marina is our favorite.

The marina is only as good as its staff. The entire staff is excellent. One staff staff member, Becky, is outstanding. She absolutely is efficient, unflappable, totally competent in getting things done, and she always wears a genuine smile. If I still had my business running (I am retired), I'd try to steal her from you!!

At any rate, you should get a round of applause and a "well done" from two cruisers who appreciate a clean, well running marina. We hope to stay here again, and will definitely recommend this marina to fellow cruisers.

We are Great Loop cruisers, so we will be through here again. Upon our return, we will definitely stay with you.

Many thanks and congratulations,

Dr. Ellen J Meyers Gould

Ellen Meyers Gould

Cc: Mayor Linda Hudson

RECEIVED
TIME_____
DEC 19 2017
CITY OF FT. PIERCE
CITY MANAGER'S OFFICE

**City Commission Regular Meeting** **7.c.**

**Meeting Date:** 01/02/2018

**Re:** Email from Melissa Bagby

**Submitted For:** Nick Mimms, City Manager, City Manager

---

**SUBJECT:**

Email from Melissa Bagby with a special thank you to Shyanne Helms, Communications Manager and Joe Sweat, Marketing Specialist for all their hard work and for the delightful time her family had on the Holiday Light Trolley Tour.

---

## Attachments

Email from Melissa Bagby

---

## Form Review

| Inbox | Reviewed By | Date |
|---|---|---|
| City Manager | Nick Mimms | 12/22/2017 12:08 PM |
| City Manager | Nick Mimms | 12/22/2017 12:08 PM |
| Form Started By: Jennifer Robinson | | Started On: 12/22/2017 10:24 AM |
| Final Approval Date: 12/22/2017 | | |

To: Jennifer D Robinson/cfp@cfp,
Cc: Joe Sweat/cfp@CFP, Shyanne Helms/cfp@cfp, Kevin Browning/cfp@CFP,
Bcc:
Subject: Fw: Holiday Light Trolley Tour
From: Nicholas Mimms/cfp - Friday 12/22/2017 09:40 AM

---

To: "'lhudson@city-ftpierce.com'" <lhudson@city-ftpierce.com>, "'nmimms@city-ftpierce.com'" <nmimms@city-ftpierce.com>

From: Melissa Bagby <melissa.bagby@abc-med.com>

Date: 12/21/2017 10:12AM

Cc: "'shelms@city-ftpierce.com'" <shelms@city-ftpierce.com>, "'jsweat@city-ftpierce.com'" <jsweat@city-ftpierce.com>

**Subject: Holiday Light Trolley Tour**

I wanted to send you an email to tell you what a delightful time my family had on the Holiday Light Trolley Tour. There was a group of 8 of us that attended together on the 6 pm tour Wednesday night 12/20/17. We thoroughly enjoyed the event and both Joe and Shyanne as the host. They did a great job at putting the event together and engaging with the people on the tour. Our only complaint was that we wanted to sing more!! If you think about it, there is nowhere that you can go to sing Christmas carols and we truly enjoyed the opportunity. It was a great addition to our holiday season and we hope you bring it back next year!! Heck, we would have even paid a few dollars for the ride!!

Encase you need some justification for why the event was successful in our opinions.

- Shyanne provided a lot of historical information about the City during the tour. She talked about the history of some of the buildings as well as improvements the city has made to increase the lights in downtown as well as bring up the west side of US1. This was engaging and informative and helps to steer the opinion of the city for those that think the downtown area can be a tad rough with some of the neighboring areas.
- We all shopped in the Wednesday Green Market which I had never realized was an event there on Wednesday.
- We all hung out and enjoyed the dancing trees in the Marina Square.
- We all ate dinner downtown which increases the business.
- We have an interest in visiting some of the businesses on the route that we didn't know about such as Merves Cuban Diner and that PB Cobb since it is under new ownership. Those businesses likely spend less than a $100 on decorations yet the marketing return of being on the Trolley tour should pay off well. (Joe – feel free to use that to get them to participate next year!!!)
- It engaged the people who decorated their homes as they were a vested interest in winning as well as being outside to great the Trolley. It was a nice sense of

community!

- Mostly, that we have an interest in what the city has going on and thought about checking on other events since this one was put together well and festive! Heck, I navigated the website today to see what was happening next and find these email address!

One suggestion that we would like to share is that maybe if you decide to have the event again, maybe offer a different route on different nights. Such as an East tour, or a West tour. You could even have the trolley meet at a different location to make it a shorter ride.

Thank you again for offering this event and a special thank you to Sheyanne and Joe for all their hard work and Christmas spirit! Kudos to you both!

Merry Christmas


**Melissa Bagby**

Credentialing Coordinator

900 E Prima Vista Blvd, Suite 300

Port Saint Lucie, FL 34952-2366

Melissa.Bagby@abc-med.com

Office: 772-240-7609

Fax: 772-212-4904

Cell: 772-708-0203

**City Commission Regular Meeting** **10.a.**

**Meeting Date:** 01/02/2018

**Re:** Monthly Financial Report for the Month Ending October 31, 2017

**Submitted For:** Johnna Morris, Finance Director, Finance Department

---

**SUBJECT:**

Monthly Financial Report for the Month October 31, 2017

**SUMMARY:**

The Finance Director prepares and presents to the City Commission and Citizens a monthly report on the financial status of the different funds of the City. The financial report for the month ending October 31, 2017, encompasses General, Marina, Solid Waste, Golf Course, Sunrise Theatre, Building & Code, and Fort Pierce Redevelopment Agency Funds.

**RECOMMENDATION:**

The Finance Department welcomes any suggestions and/or changes to the format.

**ALTERNATIVES:**

The report can be enhanced or changed.

**RESPONSIBLE STAFF:**

Finance Director.

**COORDINATED WITH:**

Finance Department & City Manager.

---

## Fiscal Impact

**Budgeted Y/N:** Y

**Fiscal Year:** 2017

**OTHER INFORMATION:**

Monthly Report on budgeted Revenue and Expenditures.

---

## Attachments

October Financial Report

---

## Form Review

| Inbox | Reviewed By | Date |
|---|---|---|
| Finance Department | Johnna Morris | 12/21/2017 09:56 AM |
| City Manager | Nick Mimms | 12/22/2017 09:02 AM |
| Form Started By: Queen Thompkins | | Started On: 12/18/2017 09:36 AM |
| Final Approval Date: 12/22/2017 | | |

**CITY OF FORT PIERCE, FLORIDA**
**FUND EVALUATION REPORT**
**FOR THE MONTH ENDING**
**October 31, 2017**

| Evaluation Criteria | General Fund | Marina Fund | Solid Waste | Golf Course | Sunrise Theatre | Building & Code |
|---|---|---|---|---|---|---|
| The revenue projections for the fund are on target. | Yes | Yes | Yes | No | Yes | Yes |
| The expense budget is on target. | Yes | Yes | Yes | Yes | Yes | Yes |
| Positive Net Operating Income | Yes | Yes | Yes | No | Yes | Yes |
| The fund cash balance is positive. | Yes | Yes | Yes | No | No | Yes |
| The fund current financial position is stable. | Yes | Yes | Yes | No | No | Yes |

| Evaluation Criteria | CRA Operating | 103 CDBG | 105 SHIP | 106 HHR | 403 Stormwater |
|---|---|---|---|---|---|
| The revenue projections for the fund are on target. | Yes | Yes | Yes | Yes | Yes |
| The expense budget is on target. | Yes | Yes | Yes | Yes | Yes |
| The fund cash balance is positive. | No | Yes | Yes | Yes | Yes |
| The fund current financial position is stable. | Yes | Yes | Yes | Yes | Yes |

City of Fort Pierce
Monthly Financial Report
**For the Month Ending October 31, 2017 (Preliminary)**
(8% Year Lapse)

| General Fund | | | | | |
|---|---|---|---|---|---|
| **Revenue** | | **Budget** | | **FYTD** | **%** |
| **Beginning Available Resources** | | | **$** | **6,819,600** | |
| **Revenue:** | | | | | |
| Taxes | $ | 20,820,530 | $ | 340,136 | 1.63% |
| Licenses & Permits | | 361,500 | | 271,750 | 75.17% |
| Intergovernmental | | 3,259,000 | | 258,335 | 7.93% |
| Charges for Services | | 249,700 | | 27,130 | 10.87% |
| Fines & Forfeitures | | 218,000 | | 19,401 | 8.90% |
| Miscellaneous Revenue | | 2,268,346 | | 112,865 | 4.98% |
| Interfund Transfers | | 2,683,710 | | 0 | 0.00% |
| Contribution from Enterprise | | 7,040,848 | | 15,000 | 0.21% |
| Appropriated Fund Balance | | 564,565 | | 0 | 0.00% |
| Restricted Revenue | | (600,000) | | 0 | 0.00% |
| **Total Revenue** | **$** | **36,866,199** | **$** | **1,044,617** | **2.83%** |

| **Expenditures:** | | **Budget** | | **FYTD** | **%** |
|---|---|---|---|---|---|
| City Commission | $ | 239,208 | $ | 17,555 | 7.34% |
| City Manager | | 567,103 | | 46,543 | 8.21% |
| City Attorney | | 725,698 | | 48,988 | 6.75% |
| City Clerk | | 330,926 | | 22,068 | 6.67% |
| Human Resources | | 492,035 | | 40,611 | 8.25% |
| Finance | | 833,699 | | 68,722 | 8.24% |
| IT | | 1,129,314 | | 62,274 | 5.51% |
| Purchasing | | 258,451 | | 20,185 | 7.81% |
| Planning | | 505,246 | | 40,158 | 7.95% |
| Code Enforcement | | 948,661 | | 189,927 | 20.02% |
| Police | | 14,008,168 | | 1,037,162 | 7.40% |
| Public Works/Director | | 96,228 | | 5,751 | 5.98% |
| Public Works/Fleet Maint. | | 589,999 | | 54,009 | 9.15% |
| Public Works/Facilities Maint. | | 948,509 | | 86,329 | 9.10% |
| Public Works/Parks & Grounds | | 2,025,903 | | 163,683 | 8.08% |
| Public Works/Streets | | 1,803,549 | | 126,739 | 7.03% |
| Engineering | | 1,223,747 | | 69,767 | 5.70% |
| Riverwalk | | 171,202 | | 11,898 | 6.95% |
| Administrative | | 9,988,552 | | 423,863 | 4.24% |
| **Total Expenditures** | **$** | **36,886,199** | **$** | **2,536,233** | **6.88%** |

| | | |
|---|---|---|
| **Net Resources** | **$** | **(1,491,616)** |
| **Total Available Resources** | **$** | **5,327,984** |
| **Less:** | | |
| 10% Budget Reserve | | (3,688,620) |
| Reserve | | (600,000) |
| **Unrestricted Resources** | **$** | **1,039,364** |

## Special Revenue Funds

| FPRA | Budget | FYTD | % |
|---|---|---|---|
| **Begnning Available Resources** | | **$ 373,979** | |
| **Beginning Available Resources** | | | |
| Taxes | 5,240,683 | 0 | 0.00% |
| Licenses & Permits | 0 | 0 | 0.00% |
| Intergovernmental | 0 | 0 | 0.00% |
| Miscellaneous Revenue | 182,500 | 11,749 | 6.44% |
| Transfers | 550,967 | 0 | 0.00% |
| **Total Revenue** | **5,974,150** | **11,749** | **0.20%** |
| **Expenses:** | | | |
| Operating | 313,000 | 74,642 | 23.85% |
| Capital Outlay | 0 | 0 | 0.00% |
| Other Programs & Projects | 20,000 | 0 | 0.00% |
| Transfers | 5,641,150 | 0 | 0.00% |
| **Total Expenses** | **5,974,150** | **74,642** | **1.25%** |
| **Net Resources** | | **(62,894)** | |
| **Unrestricted Resources** | | **$ 311,085** | |

| CDBG | Budget | FYTD | % |
|---|---|---|---|
| **Begnning Available Resources** | | **$ 733,916** | |
| **Revenue:** | | | |
| Intergovernmental Revenue | 945,538 | 0 | 0.00% |
| Misc. Revenue | 0 | 848 | 0.00% |
| Transfers | 25,177 | 0 | 0.00% |
| **Total Revenue** | **970,715** | **848** | **0.09%** |
| **Expenses:** | | | |
| Administrative | 256,141 | 14,659 | 5.72% |
| Rehabilitation Department | 40,000 | 5,370 | 13.42% |
| Capital Outlay | 0 | 0 | 0.00% |
| Economic Development | 260,000 | 0 | 0.00% |
| Public Service | 90,000 | 0 | 0.00% |
| Unencumbered | 0 | 0 | 0.00% |
| Roll Over Expenditures | 324,574 | 0 | 0.00% |
| **Total Expenses** | **970,715** | **20,028** | **2.06%** |
| **Net Resources** | | **(19,180)** | |
| **Unrestricted Resources** | | **$ 714,736** | |

| Grant Administration | Budget | FYTD | % |
|---|---|---|---|
| **Begnning Available Resources** | | **$ 990,224** | |
| **Revenue:** | | | |
| Program Income | 0 | 1,901 | 0.00% |
| Misc. Revenue | 242,500 | 1,097 | 0.45% |
| Interfund Transfers | 27,000 | 0 | 0.00% |
| **Total Revenue** | **269,500** | **2,998** | **1.11%** |
| **Expenses:** | | | |
| Personnel Services | 88,466 | 6,462 | 0.00% |
| Operating | 181,034 | 246 | 0.14% |
| Transfers | 0 | 0 | 0.00% |
| **Total Expenses** | **269,500** | **6,709** | **2.49%** |
| **Net Resources** | | **(3,711)** | |
| **Unrestricted Resources** | | **$ 986,514** | |

| SHIP | Budget | FYTD | % |
|---|---|---|---|
| **Begnning Available Resources** | | **$ 447,777** | |
| **Revenue:** | | | |
| SHIP | 260,000 | 0 | 0.00% |
| Program Income | 40,000 | 0 | 0.00% |
| Misc. Revenue | 500 | 398 | 0.00% |
| Carry Over Funding | 430,974 | 0 | 0.00% |
| **Total Revenue** | **731,474** | **398** | **0.05%** |
| **Expenses:** | | | |
| Operating | 25,000 | 31 | 0.12% |
| Grants/Programs & Projects | 706,474 | 4,070 | 0.58% |
| **Total Expenses** | **731,474** | **4,101** | **0.56%** |
| **Net Resources** | | **(3,703)** | |
| **Unrestricted Resources** | | **$ 444,074** | |

# Enterprise Funds

| Marina | Budget | YTD | % |
|---|---|---|---|
| **Begnning Available Resources** | | **$ 502,287** | |
| **Revenue:** | | | |
| Grants | 773,850 | 0 | 0.00% |
| Charges for Services | 1,495,000 | 120,426 | 8.06% |
| Misc. Revenue | 1,547,000 | 79,061 | 5.11% |
| Debt Proceeds | 0 | 0 | 0.00% |
| Approp Retained Earnings | 317,790 | 0 | 0.00% |
| **Total Revenue** | **4,133,640** | **199,488** | **4.83%** |
| **Expenses:** | | | |
| Personnel Services | 510,094 | 29,680 | 5.82% |
| Operating | 3,183,437 | 238,684 | 7.50% |
| Capital | 702,675 | 0 | 0.00% |
| Debt Service | 451,123 | 0 | 0.00% |
| Non Operating | 404,831 | 2,200 | 0.54% |
| **Total Expenses** | **5,252,160** | **270,564** | **5.15%** |
| **Plus Depreciation** | | **93,211** | |
| **Net Resources** | | **22,135** | |
| **Unrestricted Resources Available** | | **$ 524,422** | |

| Solid Waste | Budget | YTD | % |
|---|---|---|---|
| **Begnning Available Resources** | | **$ 950,016** | |
| **Revenue:** | | | |
| Charges for Services | 6,219,000 | 634,650 | 10.21% |
| Misc. Revenue | 4,000 | 5,032 | 125.79% |
| Approp Retained Earnings | 563,166 | 0 | 0.00% |
| **Total Revenue** | **6,786,166** | **639,682** | **9.43%** |
| **Expenses:** | | | |
| Personnel Services | 2,153,142 | 178,168 | 8.27% |
| Operating | 3,591,783 | 246,924 | 6.87% |
| Capital | 150,000 | 0 | 0.00% |
| Non Operating | 1,178,659 | 15,000 | 1.27% |
| **Total Expenses** | **7,073,584** | **440,091** | **6.22%** |
| **Plus Depreciation** | | **23,952** | |
| **Net Resources** | | **223,542** | |
| **Unrestricted Resources Available** | | **$ 1,173,558** | |

| Golf Course | Budget | YTD | % |
|---|---|---|---|
| **Begnning Available Resources** | | **$ (281,709)** | |
| **Revenue:** | | | |
| Charges for Services | 1,177,938 | 55,767 | 4.73% |
| Misc. Revenue | 125,750 | 7,311 | 5.81% |
| Approp Retained Earnings | 0 | 0 | 0.00% |
| **Total Revenue** | **1,303,688** | **63,079** | **4.84%** |
| **Expenses:** | | | |
| Personnel Services | 162,568 | 94,827 | 58.33% |
| Operating | 1,202,208 | 114,288 | 9.51% |
| Capital | 6,000 | 0 | 0.00% |
| Non Operating | 32,641 | 0 | 0.00% |
| **Total Expenses** | **1,403,417** | **209,115** | **14.90%** |
| **Plus Depreciation** | | **11,345** | |
| **Net Resources** | | **(134,691)** | |
| **Unrestricted Resources Available** | | **$ (416,400)** | |

| Sunrise Theatre | Budget | YTD | % |
|---|---|---|---|
| **Begnning Available Resources** | | **$ (534,246)** | |
| **Revenue:** | | | |
| Grants | 0 | 0 | 0.00% |
| Charges for Services | 3,085,000 | 537,412 | 17.42% |
| Misc. Revenue | 333,100 | 4,358 | 1.31% |
| Transfers | 450,000 | 0 | 0.00% |
| **Total Revenue** | **3,868,100** | **541,770** | **14.01%** |
| **Expenses:** | | | |
| Personnel Services | 657,865 | 52,796 | 8.03% |
| Operating | 3,742,735 | 144,020 | 3.85% |
| Capital | 2,500 | 0 | 0.00% |
| Non Operating | 0 | 0 | 0.00% |
| **Total Expenses** | **4,403,100** | **196,816** | **4.47%** |
| **Plus Depreciation** | | **44,642** | |
| **Net Resources** | | **389,596** | |
| **Unrestricted Resources Available** | | **$ (144,649)** | |

| Building | Budget | YTD | % |
|---|---|---|---|
| **Begnning Available Resources** | | **$ 805,780** | |
| **Revenue:** | | | |
| Licenses & Permits | 1,355,000 | 107,853 | 7.96% |
| Charges for Services | 22,000 | 3,102 | 14.10% |
| Fine & Forfeits | 3,000 | 0 | 0.00% |
| Misc. Revenue | 16,000 | 2,423 | 0.00% |
| Transfers | 0 | 0 | 0.00% |
| Approp Retained Earnings | 109,102 | 0 | 0.00% |
| **Total Revenue** | **1,505,102** | **113,378** | **7.53%** |
| **Expenses:** | | | |
| Personnel Services | 1,151,402 | 57,780 | 5.02% |
| Operating | 353,700 | 60,842 | 17.20% |
| Capital | 0 | 151,000 | 0.00% |
| Non Operating | 5,277 | 0 | 0.00% |
| **Total Expenses** | **1,510,379** | **269,623** | **17.85%** |
| **Plus Depreciation** | | **0** | |
| **Net Resources** | | **(156,245)** | |
| **Unrestricted Resources Available** | | **$ 649,536** | |

| Stormwater | Budget | YTD | % |
|---|---|---|---|
| **Begnning Available Resources** | | **$ 1,224,843** | |
| **Revenue:** | | | |
| Federal Grants | 0 | 0 | 0.00% |
| State Grants | 0 | 0 | 0.00% |
| Charges for Services | 2,542,540 | 0 | 0.00% |
| Misc. Revenue | 15,000 | 92 | 0.62% |
| Transfers | 0 | 0 | 0.00% |
| Approp Retained Earnings | 484,828 | 0 | 0.00% |
| **Total Revenue** | **3,042,368** | **92** | **0.00%** |
| **Expenses:** | | | |
| Personnel Services | 0 | 0 | 0.00% |
| Operating | 3,017,238 | 116,271 | 3.85% |
| Capital | 5,000 | 0 | 0.00% |
| Non Operating | 1,206,130 | 0 | 0.00% |
| **Total Expenses** | **4,228,368** | **116,271** | **2.75%** |
| **Plus Depreciation** | | **99,160** | |
| **Net Resources** | | **(17,019)** | |
| **Unrestricted Resources Available** | | **$ 1,207,824** | |

**RESTRICTED REVENUE RECONCILIATION**
**THRU 10/31/2017**

| | Receipts Budget 2010-2014 | Receipts Budget 2014-2015 | Receipts Budget 2015-16 | Receipts Budget 2016-17 | Receipts Budget 2017-18 | | Total Receipts | Expenses Budget 2010-2014 | Expenses Budget 2014-2015 | Expenses Budget 2015-2016 | Expenses Budget 2016-2017 | Expenses Budget 2017-18 | Committed | | Expend Total | Balance FY2018 |
|---|---|---|---|---|---|---|---|---|---|---|---|---|---|---|---|---|
| Parks MSTU | 1,199,340.01 | 151,555.00 | 122,958.00 | 193,738.00 | | | 1,667,591.01 | 399,714.00 | 260,145.00 | 197,819.40 | 105,960.00 | | 0.00 | | 963,638.40 | 703,952.61 |
| Grants | 186,300.00 | | | | | | 186,300.00 | 186,300.00 | | | | | | | 186,300.00 | 0.00 |
| Art In Public Places | 208,722.00 | | | | | | 208,722.00 | 23,738.15 | | | 180,400.00 | | | | 204,138.15 | 4,583.85 |
| Royalties (Gaming) | 289,837.42 | 42,165.03 | 35,026.31 | 37,007.10 | | 2d | 404,035.86 | 230,922.71 a | | | | | 0.00 | (1) (2) | 230,922.71 | 173,113.15 |
| Tree Preservation Fees | 16,900.00 | 17,700.00 | 350.00 | 350.00 | | | 35,300.00 | 5,136.88 | 3,831.10 | 14,856.96 | 1,980.99 | | | | 25,805.93 | 9,494.07 |
| Sidewalks PILO | 938.22 | 13,779.00 | 0.00 | 33,621.63 | | | 48,338.85 | | | | | | | | 0.00 | 48,338.85 |
| Parking PILO | 16,000.00 | 2,000.00 | 34,000.00 | 500.00 | 250.00 | | 52,750.00 | | | | | | | | 0.00 | 52,750.00 |
| Storm Water Utility Fee | 28,098.22 | 8,065.48 | 8,132.58 | 9,686.16 | | | 53,982.44 | | | | | | 0.00 | | 0.00 | 53,982.44 |
| Road Impact Fees | 355,663.63 | 116,573.34 | 246,932.06 | 299,620.12 | 161.42 | | 1,018,950.57 | 137,687.14 | 19,125.95 | 0.00 | 196,543.85 | | 0.00 | (3) (6) | 353,356.94 | 665,593.63 |
| Park Impact Fees | 190,355.08 | 26,241.54 | 43,724.83 | 60,829.41 | 87.04 | | 321,237.90 | 77,104.56 | 99,072.00 | | | | 0.00 | (2) (4) | 176,176.56 | 145,061.34 |
| Building Impact Fees | 78,999.30 | 18,260.11 | 39,594.08 | 32,552.15 | 47.32 | | 169,452.96 | 8,735.09 | | | | | 0.00 | (2)(6) | 8,735.09 | 160,717.87 |
| Solid Waste | 21,290.59 | 7,355.23 | 6,654.21 | 19,533.24 | 15.27 | | 54,848.54 | 19,233.86 | | | | | 0.00 | (5) | 19,233.86 | 35,614.68 |
| Impact Admin Fee | 22,925.31 | 5,718.41 | 11,411.91 | 9,597.63 | | | 49,653.26 | 18,233.88 | 1,440.94 | 494.18 | 4.00 | | | | 20,173.00 | 29,480.26 |
| Multimodal Transportation | 4,000.00 | | | | | | 4,000.00 | | | | | | | | 0.00 | 4,000.00 |
| PFSRD Parks and Recreation | 7,500.00 | | | | | | 7,500.00 | 7,500.00 | | | | | 0.00 | | 7,500.00 | 0.00 |
| PFSRD Road Improvements | 129,258.58 | | | | | | 129,258.58 | 73,529.71 | | | | | | | 73,529.71 | 55,728.87 |
| Other Miscell. Restricted | 48,808.29 | 76,958.91 | 235,541.10 | | | | 361,308.30 | 48,808.29 | | | | | | (1) | 48,808.29 | 312,500.01 |
| Sunrise Theatre Capital Fee | 0.00 | 0.00 | | 132,916.00 | 10,572.00 | | 143,488.00 | | | | 96,825.00 | | | | 96,825.00 | 46,663.00 |
| Sale of Surplus Land-FPRA | 0.00 | 0.00 | | 1,094,829.09 | | | 1,094,829.09 | | | | | | | | 0.00 | 1,094,829.09 |
| Sale of Surplus Land-City | 0.00 | 0.00 | | 50.00 | | | 50.00 | | | | | | | | 0.00 | 50.00 |
| Uncommitted Funds | 35,539.28 | 4,930.10 | 47,052.73 | 25,030.60 | 978.05 | | 113,530.76 | 31,139.56 | | | | | | | 31,139.56 | 82,391.20 |
| | 2,840,475.93 | 491,302.15 | 831,377.81 | 1,949,861.13 | 12,111.10 | | 6,125,128.12 | 1,267,783.83 | 383,614.99 | 213,170.54 | 581,713.84 | 0.00 | 0.00 | | 2,446,283.20 | 3,678,844.92 |

**City Commission Regular Meeting** **10.b.**

**Meeting Date:** 01/02/2018

**Re:** Monthly Financial Report for the Month Ending November 30, 2017

**Submitted For:** Johnna Morris, Finance Director, Finance Department

---

**SUBJECT:**

Monthly Financial Report for the Month Ending November 30, 2017.

**SUMMARY:**

The Finance Director prepares and presents to the City Commission and Citizens a monthly report on the financial status of the different funds of the City. The financial report for the month ending November 30, 2017, encompasses General, Marina, Solid Waste, Golf Course, Sunrise Theatre, Building & Code, and Fort Pierce Redevelopment Agency Funds.

**RECOMMENDATION:**

The Finance Department welcomes any suggestions and/or changes to the format.

**ALTERNATIVES:**

The report can be enhanced or changed.

**RESPONSIBLE STAFF:**

Finance Director.

**COORDINATED WITH:**

Finance Department & City Manager.

---

## Fiscal Impact

**Budgeted Y/N:** Y

**Fiscal Year:** 2017

**OTHER INFORMATION:**

Monthly Report on budgeted Revenue and Expenditures.

---

## Attachments

November Financial Report

---

## Form Review

| Inbox | Reviewed By | Date |
|---|---|---|
| Finance Department | Johnna Morris | 12/21/2017 09:56 AM |
| City Manager | Nick Mimms | 12/22/2017 09:03 AM |
| Form Started By: Queen Thompkins | | Started On: 12/18/2017 11:02 AM |
| Final Approval Date: 12/22/2017 | | |

**CITY OF FORT PIERCE, FLORIDA**
**FUND EVALUATION REPORT**
**FOR THE MONTH ENDING**
**November 30, 2017**

| Evaluation Criteria | General Fund | Marina Fund | Solid Waste | Golf Course | Sunrise Theatre | Building & Code |
|---|---|---|---|---|---|---|
| The revenue projections for the fund are on target. | Yes | Yes | Yes | No | Yes | No |
| The expense budget is on target. | Yes | Yes | Yes | No | Yes | Yes |
| Positive Net Operating Income | Yes | Yes | Yes | No | Yes | No |
| The fund cash balance is positive. | Yes | Yes | Yes | No | No | Yes |
| The fund current financial position is stable. | Yes | Yes | Yes | No | Yes | Yes |

| Evaluation Criteria | CRA Operating | 103 CDBG | 105 SHIP | 106 HHR | 403 Stormwater |
|---|---|---|---|---|---|
| The revenue projections for the fund are on target. | Yes | Yes | Yes | Yes | Yes |
| The expense budget is on target. | Yes | Yes | Yes | Yes | Yes |
| The fund cash balance is positive. | No | Yes | Yes | Yes | Yes |
| The fund current financial position is stable. | Yes | Yes | Yes | Yes | Yes |

City of Fort Pierce
Monthly Financial Report
**For the Month Ending November 30, 2017 (Preliminary)**
(17% Year Lapse)

| General Fund | | | | | |
|---|---|---|---|---|---|
| **Revenue** | | **Budget** | | **FYTD** | **%** |
| **Beginning Available Resources** | | | **$** | **6,819,600** | |
| **Revenue:** | | | | | |
| Taxes | $ | 20,820,530 | $ | 3,066,826 | 14.73% |
| Licenses & Permits | | 361,500 | | 296,233 | 81.95% |
| Intergovernmental | | 3,259,000 | | 526,917 | 16.17% |
| Charges for Services | | 249,700 | | 56,162 | 22.49% |
| Fines & Forfeitures | | 218,000 | | 27,201 | 12.48% |
| Miscellaneous Revenue | | 2,268,346 | | 278,373 | 12.27% |
| Interfund Transfers | | 2,683,710 | | 0 | 0.00% |
| Contribution from Enterprise | | 7,040,848 | | 15,000 | 0.21% |
| Appropriated Fund Balance | | 564,565 | | 0 | 0.00% |
| Restricted Revenue | | (600,000) | | 0 | 0.00% |
| **Total Revenue** | **$** | **36,866,199** | **$** | **4,266,712** | **11.57%** |

| **Expenditures:** | | **Budget** | | **FYTD** | **%** |
|---|---|---|---|---|---|
| City Commission | $ | 239,208 | $ | 35,275 | 14.75% |
| City Manager | | 567,103 | | 98,691 | 17.40% |
| City Attorney | | 725,698 | | 96,765 | 13.33% |
| City Clerk | | 330,926 | | 48,366 | 14.62% |
| Human Resources | | 492,035 | | 85,526 | 17.38% |
| Finance | | 833,699 | | 143,646 | 17.23% |
| IT | | 1,129,314 | | 129,405 | 11.46% |
| Purchasing | | 258,451 | | 36,819 | 14.25% |
| Planning | | 505,246 | | 81,593 | 16.15% |
| Code Enforcement | | 948,661 | | 284,312 | 29.97% |
| Police | | 14,008,168 | | 2,594,257 | 18.52% |
| Public Works/Director | | 96,228 | | 12,572 | 13.06% |
| Public Works/Fleet Maint. | | 589,999 | | 112,819 | 19.12% |
| Public Works/Facilities Maint. | | 948,509 | | 181,191 | 19.10% |
| Public Works/Parks & Grounds | | 2,025,903 | | 364,417 | 17.99% |
| Public Works/Streets | | 1,803,549 | | 348,043 | 19.30% |
| Engineering | | 1,223,747 | | 144,912 | 11.84% |
| Riverwalk | | 171,202 | | 29,201 | 17.06% |
| Administrative | | 9,988,552 | | 1,067,611 | 10.69% |
| **Total Expenditures** | **$** | **36,886,199** | **$** | **5,895,419** | **15.98%** |

| | | |
|---|---|---|
| **Net Resources** | **$** | **(1,628,707)** |
| **Total Available Resources** | **$** | **5,190,893** |
| **Less:** | | |
| 10% Budget Reserve | | (3,688,620) |
| Reserve | | (600,000) |
| **Unrestricted Resources** | **$** | **902,273** |

## Special Revenue Funds

| FPRA | Budget | FYTD | % |
|---|---|---|---|
| **Begnning Available Resources** | | **$ 373,979** | |
| **Beginning Available Resources** | | | |
| Taxes | 5,240,683 | 0 | 0.00% |
| Licenses & Permits | 0 | 0 | 0.00% |
| Intergovernmental | 0 | 979 | 0.00% |
| Miscellaneous Revenue | 182,500 | 26,269 | 14.39% |
| Transfers | 550,967 | 0 | 0.00% |
| **Total Revenue** | **5,974,150** | **27,248** | **0.46%** |
| **Expenses:** | | | |
| Operating | 313,000 | 89,523 | 28.60% |
| Capital Outlay | 0 | 25,282 | 0.00% |
| Other Programs & Projects | 20,000 | 0 | 0.00% |
| Transfers | 5,641,150 | 0 | 0.00% |
| **Total Expenses** | **5,974,150** | **114,805** | **1.92%** |
| **Net Resources** | | **(87,556)** | |
| **Unrestricted Resources** | | **$ 286,423** | |

| CDBG | Budget | FYTD | % |
|---|---|---|---|
| **Begnning Available Resources** | | **$ 733,916** | |
| **Revenue:** | | | |
| Intergovernmental Revenue | 945,538 | 0 | 0.00% |
| Misc. Revenue | 0 | 1,644 | 0.00% |
| Transfers | 25,177 | 0 | 0.00% |
| **Total Revenue** | **970,715** | **1,644** | **0.17%** |
| **Expenses:** | | | |
| Administrative | 256,141 | 38,848 | 15.17% |
| Rehabilitation Department | 40,000 | 3,550 | 8.87% |
| Capital Outlay | 0 | 0 | 0.00% |
| Economic Development | 260,000 | 9,878 | 3.80% |
| Public Service | 90,000 | 0 | 0.00% |
| Unencumbered | 0 | 0 | 0.00% |
| Roll Over Expenditures | 324,574 | 32,043 | 9.87% |
| **Total Expenses** | **970,715** | **84,320** | **8.69%** |
| **Net Resources** | | **(82,676)** | |
| **Unrestricted Resources** | | **$ 651,241** | |

| Grant Administration | Budget | FYTD | % |
|---|---|---|---|
| **Begnning Available Resources** | | **$ 990,224** | |
| **Revenue:** | | | |
| Program Income | 0 | 3,163 | 0.00% |
| Misc. Revenue | 242,500 | 1,626 | 0.67% |
| Interfund Transfers | 27,000 | 0 | 0.00% |
| **Total Revenue** | **269,500** | **4,788** | **1.78%** |
| **Expenses:** | | | |
| Personnel Services | 88,466 | 12,964 | 0.00% |
| Operating | 181,034 | 250 | 0.14% |
| Transfers | 0 | 0 | 0.00% |
| **Total Expenses** | **269,500** | **13,214** | **4.90%** |
| **Net Resources** | | **(8,426)** | |
| **Unrestricted Resources** | | **$ 981,798** | |

| SHIP | Budget | FYTD | % |
|---|---|---|---|
| **Begnning Available Resources** | | **$ 447,777** | |
| **Revenue:** | | | |
| SHIP | 260,000 | 0 | 0.00% |
| Program Income | 40,000 | 0 | 0.00% |
| Misc. Revenue | 500 | 606 | 0.00% |
| Carry Over Funding | 430,974 | 0 | 0.00% |
| **Total Revenue** | **731,474** | **606** | **0.08%** |
| **Expenses:** | | | |
| Operating | 25,000 | 65 | 0.26% |
| Grants/Programs & Projects | 706,474 | 20,260 | 2.87% |
| **Total Expenses** | **731,474** | **20,325** | **2.78%** |
| **Net Resources** | | **(19,719)** | |
| **Unrestricted Resources** | | **$ 428,058** | |

# Enterprise Funds

| Marina | Budget | YTD | % |
|---|---|---|---|
| **Begnning Available Resources** | | **$ 502,287** | |
| **Revenue:** | | | |
| Grants | 773,850 | 0 | 0.00% |
| Charges for Services | 1,495,000 | 281,408 | 18.82% |
| Misc. Revenue | 1,547,000 | 239,290 | 15.47% |
| Debt Proceeds | 0 | 0 | 0.00% |
| Approp Retained Earnings | 317,790 | 0 | 0.00% |
| **Total Revenue** | **4,133,640** | **520,697** | **12.60%** |
| **Expenses:** | | | |
| Personnel Services | 510,094 | 66,402 | 13.02% |
| Operating | 3,183,437 | 456,706 | 14.35% |
| Capital | 702,675 | 9,971 | 1.42% |
| Debt Service | 451,123 | 0 | 0.00% |
| Non Operating | 404,831 | 6,240 | 1.54% |
| **Total Expenses** | **5,252,160** | **539,318** | **10.27%** |
| **Plus Depreciation** | | **186,422** | |
| **Net Resources** | | **167,801** | |
| **Unrestricted Resources Available** | | **$ 670,088** | |

| Solid Waste | Budget | YTD | % |
|---|---|---|---|
| **Begnning Available Resources** | | **$ 950,016** | |
| **Revenue:** | | | |
| Charges for Services | 6,219,000 | 1,273,038 | 20.47% |
| Misc. Revenue | 4,000 | 5,251 | 131.26% |
| Approp Retained Earnings | 563,166 | 0 | 0.00% |
| **Total Revenue** | **6,786,166** | **1,278,288** | **18.84%** |
| **Expenses:** | | | |
| Personnel Services | 2,153,142 | 370,123 | 17.19% |
| Operating | 3,591,783 | 454,581 | 12.66% |
| Capital | 150,000 | 60,728 | 40.49% |
| Non Operating | 1,178,659 | 15,000 | 1.27% |
| **Total Expenses** | **7,073,584** | **900,432** | **12.73%** |
| **Plus Depreciation** | | **47,903** | |
| **Net Resources** | | **425,759** | |
| **Unrestricted Resources Available** | | **$ 1,375,775** | |

| Golf Course | Budget | YTD | % |
|---|---|---|---|
| **Begnning Available Resources** | | **$ (281,709)** | |
| **Revenue:** | | | |
| Charges for Services | 1,177,938 | 137,701 | 11.69% |
| Misc. Revenue | 125,750 | 17,454 | 13.88% |
| Approp Retained Earnings | 0 | 0 | 0.00% |
| **Total Revenue** | **1,303,688** | **155,156** | **11.90%** |
| **Expenses:** | | | |
| Personnel Services | 162,568 | 104,562 | 64.32% |
| Operating | 1,202,208 | 239,788 | 19.95% |
| Capital | 6,000 | 0 | 0.00% |
| Non Operating | 32,641 | 0 | 0.00% |
| **Total Expenses** | **1,403,417** | **344,351** | **24.54%** |
| **Plus Depreciation** | | **22,690** | |
| **Net Resources** | | **(166,505)** | |
| **Unrestricted Resources Available** | | **$ (448,214)** | |

| Sunrise Theatre | Budget | YTD | % |
|---|---|---|---|
| **Begnning Available Resources** | | **$ (534,246)** | |
| **Revenue:** | | | |
| Grants | 0 | 0 | 0.00% |
| Charges for Services | 3,085,000 | 880,899 | 28.55% |
| Misc. Revenue | 333,100 | 14,050 | 4.22% |
| Transfers | 450,000 | 0 | 0.00% |
| **Total Revenue** | **3,868,100** | **894,949** | **23.14%** |
| **Expenses:** | | | |
| Personnel Services | 657,865 | 109,826 | 16.69% |
| Operating | 3,742,735 | 366,807 | 9.80% |
| Capital | 2,500 | 0 | 0.00% |
| Non Operating | 0 | 0 | 0.00% |
| **Total Expenses** | **4,403,100** | **476,633** | **10.82%** |
| **Plus Depreciation** | | **89,285** | |
| **Net Resources** | | **507,601** | |
| **Unrestricted Resources Available** | | **$ (26,645)** | |

| Building | Budget | YTD | % |
|---|---|---|---|
| **Begnning Available Resources** | | **$ 805,780** | |
| **Revenue:** | | | |
| Licenses & Permits | 1,355,000 | 194,749 | 14.37% |
| Charges for Services | 22,000 | 5,428 | 24.67% |
| Fine & Forfeits | 3,000 | 0 | 0.00% |
| Misc. Revenue | 16,000 | 4,125 | 0.00% |
| Transfers | 0 | 0 | 0.00% |
| Approp Retained Earnings | 109,102 | 0 | 0.00% |
| **Total Revenue** | **1,505,102** | **204,302** | **13.57%** |
| **Expenses:** | | | |
| Personnel Services | 1,151,402 | 133,411 | 11.59% |
| Operating | 353,700 | 100,827 | 28.51% |
| Capital | 0 | 151,000 | 0.00% |
| Non Operating | 5,277 | 0 | 0.00% |
| **Total Expenses** | **1,510,379** | **385,238** | **25.51%** |
| **Plus Depreciation** | | **0** | |
| **Net Resources** | | **(180,936)** | |
| **Unrestricted Resources Available** | | **$ 624,844** | |

| Stormwater | Budget | YTD | % |
|---|---|---|---|
| **Begnning Available Resources** | | **$ 1,224,843** | |
| **Revenue:** | | | |
| Federal Grants | 0 | 0 | 0.00% |
| State Grants | 0 | 0 | 0.00% |
| Charges for Services | 2,542,540 | 332,373 | 13.07% |
| Misc. Revenue | 15,000 | 175 | 1.17% |
| Transfers | 0 | 0 | 0.00% |
| Approp Retained Earnings | 484,828 | 0 | 0.00% |
| **Total Revenue** | **3,042,368** | **332,548** | **10.93%** |
| **Expenses:** | | | |
| Personnel Services | 0 | 0 | 0.00% |
| Operating | 3,017,238 | 819,231 | 27.15% |
| Capital | 5,000 | 0 | 0.00% |
| Non Operating | 1,206,130 | 0 | 0.00% |
| **Total Expenses** | **4,228,368** | **819,231** | **19.37%** |
| **Plus Depreciation** | | **99,160** | |
| **Net Resources** | | **(387,523)** | |
| **Unrestricted Resources Available** | | **$ 837,320** | |

**RESTRICTED REVENUE RECONCILIATION**
**THRU 11/30/2017**

| | Receipts Budget 2010-2014 | Receipts Budget 2014-2015 | Receipts Budget 2015-16 | Receipts Budget 2016-17 | Receipts Budget 2017-18 | | Total Receipts | Expenses Budget 2010-2014 | Expenses Budget 2014-2015 | Expenses Budget 2015-2016 | Expenses Budget 2016-2017 | Expenses Budget 2017-18 | Committed | | Expend Total | Balance FY2018 |
|---|---|---|---|---|---|---|---|---|---|---|---|---|---|---|---|---|
| Parks MSTU | 1,199,340.01 | 151,555.00 | 122,958.00 | 193,738.00 | 17,526.00 | | 1,685,117.01 | 399,714.00 | 260,145.00 | 197,819.40 | 105,960.00 | | 0.00 | | 963,638.40 | 721,478.61 |
| Grants | 186,300.00 | | | | | | 186,300.00 | 186,300.00 | | | | | | | 186,300.00 | 0.00 |
| Art In Public Places | 208,722.00 | | | | | | 208,722.00 | 23,738.15 | | | 180,400.00 | | | | 204,138.15 | 4,583.85 |
| Royalties (Gaming) | 289,837.42 | 42,165.03 | 35,026.31 | 37,007.10 | | 2d | 404,035.86 | 230,922.71 a | | | | | 0.00 | (1) (2) | 230,922.71 | 173,113.15 |
| Tree Preservation Fees | 16,900.00 | 17,700.00 | 350.00 | 350.00 | | | 35,300.00 | 5,136.88 | 3,831.10 | 14,856.96 | 1,980.99 | | | | 25,805.93 | 9,494.07 |
| Sidewalks PILO | 938.22 | 13,779.00 | 0.00 | 33,621.63 | 7,976.06 | | 56,314.91 | | | | | | | | 0.00 | 56,314.91 |
| Parking PILO | 16,000.00 | 2,000.00 | 34,000.00 | 500.00 | 500.00 | | 53,000.00 | | | | | | | | 0.00 | 53,000.00 |
| Clean & Safe Initiative | | | | | 25,998.00 | | 25,998.00 | | | | | | | | 0.00 | 25,998.00 |
| Storm Water Utility Fee | 28,098.22 | 8,065.48 | 8,132.58 | 9,686.16 | 16.00 | | 53,998.44 | | | | | | 0.00 | | 0.00 | 53,998.44 |
| Road Impact Fees | 355,663.63 | 116,573.34 | 246,932.06 | 299,620.12 | 161.42 | | 1,018,950.57 | 137,687.14 | 19,125.95 | 0.00 | 196,543.85 | 40,633.75 | 0.00 | (3) (6) | 393,990.69 | 624,959.88 |
| Park Impact Fees | 190,355.08 | 26,241.54 | 43,724.83 | 60,829.41 | 87.04 | | 321,237.90 | 77,104.56 | 99,072.00 | | | | 0.00 | (2) (4) | 176,176.56 | 145,061.34 |
| Building Impact Fees | 78,999.30 | 18,260.11 | 39,594.08 | 32,552.15 | 47.32 | | 169,452.96 | 8,735.09 | | | | | 0.00 | (2)(6) | 8,735.09 | 160,717.87 |
| Solid Waste | 21,290.59 | 7,355.23 | 6,654.21 | 19,533.24 | 15.27 | | 54,848.54 | 19,233.86 | | | | | 0.00 | (5) | 19,233.86 | 35,614.68 |
| Impact Admin Fee | 22,925.31 | 5,718.41 | 11,411.91 | 9,597.63 | | | 49,653.26 | 18,233.88 | 1,440.94 | 494.18 | 4.00 | | | | 20,173.00 | 29,480.26 |
| Multimodal Transportation | 4,000.00 | | | | | | 4,000.00 | | | | | | | | 0.00 | 4,000.00 |
| PFSRD Parks and Recreation | 7,500.00 | | | | | | 7,500.00 | 7,500.00 | | | | | 0.00 | | 7,500.00 | 0.00 |
| PFSRD Road Improvements | 129,258.58 | | | | | | 129,258.58 | 73,529.71 | | | | | | | 73,529.71 | 55,728.87 |
| Other Miscell. Restricted | 48,808.29 | 76,958.91 | 235,541.10 | | | | 361,308.30 | 48,808.29 | | | | | | (1) | 48,808.29 | 312,500.01 |
| Sunrise Theatre Capital Fee | 0.00 | 0.00 | | 132,916.00 | 27,638.00 | | 160,554.00 | | | | 96,825.00 | | | | 96,825.00 | 63,729.00 |
| Sale of Surplus Land-FPRA | 0.00 | 0.00 | | 1,094,829.09 | | | 1,094,829.09 | | | | | | | | 0.00 | 1,094,829.09 |
| Sale of Surplus Land-City | 0.00 | 0.00 | | 50.00 | | | 50.00 | | | | | | | | 0.00 | 50.00 |
| Uncommitted Funds | 35,539.28 | 4,930.10 | 47,052.73 | 25,030.60 | 1,507.68 | | 114,060.39 | 31,139.56 | | | | | | | 31,139.56 | 82,920.83 |
| | 2,840,475.93 | 491,302.15 | 831,377.81 | 1,949,861.13 | 81,472.79 | | 6,194,489.81 | 1,267,783.83 | 383,614.99 | 213,170.54 | 581,713.84 | 40,633.75 | 0.00 | | 2,486,916.95 | 3,707,572.86 |

**City Commission Regular Meeting** **10.c.**

**Meeting Date:** 01/02/2018

**Re:** Preliminary Fourth Quarter Financial Report

**Submitted For:** Johnna Morris, Finance Director, Finance Department

---

**SUBJECT:**

Preliminary Fourth Quarter Financial Report

**SUMMARY:**

The Finance Director prepares and presents to the City Commission and Citizens a quarterly report on the financial status of the different funds of the City. The financial report for the period ending September 30, 2017, encompasses General, Marina, Solid Waste, Golf Course, Sunrise Theatre, Building & Code, and Urban Redevelopment Funds. The financial book shows comparative information for the fourth quarters of FY 2016 and 2017.

**RECOMMENDATION:**

The Finance Department welcomes any suggestions and/or changes to the format or contents.

**ALTERNATIVES:**

The report can be enhanced or changed completely.

**RESPONSIBLE STAFF:**

Director of Finance

**COORDINATED WITH:**

Finance Department and City Manager.

---

## Fiscal Impact

**Budgeted Y/N:** Y

**Fiscal Year:** 2017

**OTHER INFORMATION:**

Report on FY 2017 budgeted Revenue and Expenditures.

---

## Attachments

Fourth Quarter Financial Report

---

## Form Review

| Inbox | Reviewed By | Date |
|---|---|---|
| Finance Department | Johnna Morris | 12/21/2017 09:56 AM |
| City Manager | Nick Mimms | 12/22/2017 09:02 AM |

Form Started By: Queen Thompkins

Started On: 12/18/2017 11:25 AM

Final Approval Date: 12/22/2017

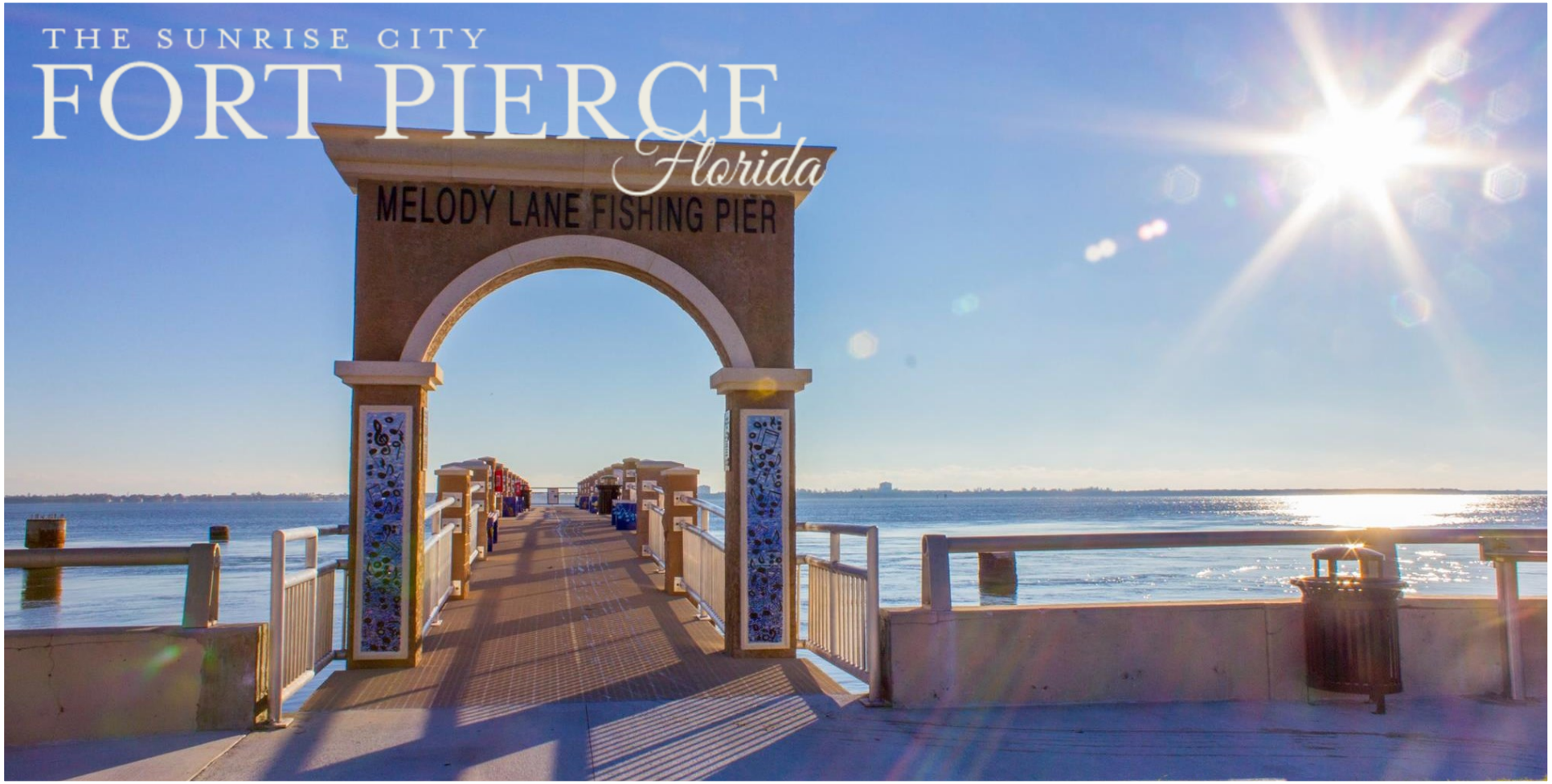


# City of Fort Pierce

# Quarterly Financial Report

## For Quarter Ending September 30, 2017 - Preliminary

**CITY OF FORT PIERCE, FLORIDA**
**FUND EVALUATION REPORT**
**FOR THE QUARTER ENDING**
**September 30, 2017**

| Evaluation Criteria | General Fund | Marina Fund | Solid Waste | Golf Course | Sunrise Theatre | Building & Code |
|---|---|---|---|---|---|---|
| The revenue projections for the fund are on target. | Yes | Yes | Yes | No | No | Yes |
| The expense budget is on target. | Yes | Yes | Yes | No | No | Yes |
| Positive Net Operating Income | Yes | Yes | Yes | No | Yes | Yes |
| The fund cash balance is positive. | Yes | Yes | Yes | No | No | Yes |
| The fund current financial position is stable. | Yes | Yes | Yes | No | No | Yes |

| Evaluation Criteria | CRA Operating | 103 CDBG | 105 SHIP | 106 HHR |
|---|---|---|---|---|
| The revenue projections for the fund are on target. | Yes | Yes | Yes | Yes |
| The expense budget is on target. | Yes | Yes | Yes | Yes |
| The fund cash balance is positive. | Yes | Yes | Yes | Yes |
| The fund current financial position is stable. | Yes | Yes | Yes | Yes |

# GENERAL FUND
# Projected (Shortage) or Overage for
# Fiscal Year 2016/17

| | 1ST QUARTER | 2ND QUARTER | 3RD QUARTER | 4TH QUARTER |
|---|---|---|---|---|
| REVENUES: | | | | |
| CURRENT AD VALOREM | 0 | 0 | 0 | 0 |
| DELIQUENT AD VALOREM | 0 | (10,000) | (10,000) | (67,481) |
| LOCAL OPTION GAS TAX | 0 | 0 | 80,000 | 134,076 |
| TELECOMMUNICATION TAX | 0 | 0 | 0 | (84,052) |
| UTILITY TAX | 0 | (20,000) | 25,000 | 342,939 |
| OCCUPATIONAL LICENSE & PERMITS | 0 | 20,000 | 20,000 | 34,463 |
| INTERGOVERNMENTAL REVENUES | 0 | 0 | 50,000 | 603,422 |
| CHARGES FOR SERVICES | 0 | 0 | 50,000 | 64,420 |
| COURT & OTHER FINES | 0 | 5,000 | 5,000 | (361) |
| INTEREST ON INVESTMENTS | 0 | 10,000 | 25,000 | 102,411 |
| MISCELLANEOUS CONTRACTUAL REVENUE | 0 | 50,000 | 50,000 | 688,202 |
| UTILITY AUTHORITY TRANSFER | 0 | 0 | 0 | 15,500 |
| INTER-FUND TRANSFER | 0 | 0 | (200,000) | 3,781,652 |
| FUND BALANCE | 0 | 0 | 0 | 0 |
| REVENUE TOTALS | 0 | 55,000 | 95,000 | 5,615,191 |

# GENERAL FUND
# Projected (Shortage) or Overage for
# Fiscal Year 2016/17 CONT'D

| | 1ST QUARTER | 2ND QUARTER | 3RD QUARTER | 4TH QUARTER |
|---|---|---|---|---|
| EXPENDITURES: | | | | |
| SALARIES AND BENEFITS | 0 | 0 | 63,500 | 575,796 |
| EXPENDITURES | 0 | 0 | 0 | (101,566) |
| CAPITAL | 0 | 0 | 0 | 2,319,692 |
| GRANTS AND AIDS | 0 | 0 | 0 | 14,396 |
| FUNDS TRANSFER | 0 | 0 | 0 | 950,774 |
| DEBT SERVICE | 0 | 0 | 0 | 984,903 |
| EXPENDITURES TOTALS | 0 | 0 | 63,500 | 4,743,995 |
| PROJECTED REVENUE OVERAGE (SHORTAGE) | 0 | 55,000 | 31,500 | 871,196 |

## GENERAL FUND - REVENUE DETAIL

| | | 2015/16 Budget | 2015/16 Actual | Yr. Lapse 100% | 2016/17 Budget | 2016/17 Actual | Yr. Lapse 100% |
|---|---|---|---|---|---|---|---|
| **Taxes** | | | | | | | |
| 311 10 | Current Ad Valorem | $ 13,728,327 | $ 13,791,155 | 100.46% | $ 14,680,037 | $ 14,690,422 | 100.07% |
| 311 15 | Ad Valorem Adjustment Amount | (684,831) | (656,722) | 95.90% | (727,662) | (699,544) | 96.14% |
| 311 20 | Delinquent Ad Valorem | 50,000 | 36,763 | 73.53% | 50,000 | (17,481) | -34.96% |
| 312 31 | Local Option Gas Tax | 1,100,000 | 1,214,612 | 110.42% | 1,100,000 | 1,201,054 | 109.19% |
| 312 32 | New Local Option Gas Tax | 825,000 | 868,282 | 105.25% | 825,000 | 858,022 | 104.00% |
| 314 10 | Public Service Electricity | 1,950,000 | 2,163,062 | 110.93% | 1,950,000 | 2,188,303 | 112.22% |
| 314 11 | Electricity FPL | 250,000 | 403,669 | 161.47% | 325,000 | 429,636 | 132.20% |
| 314 20 | Telecommunications Tax | 1,300,000 | 1,249,606 | 96.12% | 1,300,000 | 1,215,948 | 93.53% |
| 314 30 | Public Service Water | 425,000 | 444,328 | 104.55% | 425,000 | 480,359 | 113.03% |
| 314 30 | Miscellaneous Taxes | 0 | 771 | 0.00% | 0 | 616 | 0.00% |
| | **Total Taxes** | $ 18,943,496 | $ 19,515,527 | 103.02% | $ 19,927,375 | $ 20,347,337 | 102.11% |
| **Licenses and Permits** | | | | | | | |
| 321 20 | Occupational Licenses | $ 270,000 | $ 263,811 | 97.71% | $ 275,000 | $ 257,429 | 93.61% |
| 323 10 | Planning & Zoning Fees | 30,000 | 35,735 | 119.12% | 25,000 | 42,421 | 169.68% |
| 323 30 | Amendments | 3,000 | 22,034 | 734.46% | 10,000 | 39,653 | 396.53% |
| 323 60 | Sign Fees | 5,000 | 6,110 | 122.20% | 5,000 | 5,265 | 105.30% |
| 323 90 | Miscellaneous | 25,000 | 27,476 | 109.90% | 25,000 | 32,718 | 130.87% |
| 329 10 | Animal Licenses | 5,000 | 10,211 | 204.22% | 5,000 | 9,323 | 186.46% |
| 329 20 | Lot Clearing Permits | 2,000 | 1,211 | 60.54% | 2,000 | 442 | 22.08% |
| 329 30 | Demolition Permits | 3,000 | 0 | 0.00% | 3,000 | 0 | 0.00% |
| 329 92 | Vendor Permit/Application Fees | 5,000 | 2,646 | 52.92% | 5,000 | 700 | 14.00% |
| 329 93 | Vendor Permit Fees | 0 | 5,162 | 0.00% | 1,000 | 2,383 | 238.33% |
| 329 99 | Other Licenses/Permits | 0 | 0 | 0.00% | 500 | 630 | 126.00% |
| | **Total Licenses and Permits** | $ 348,000 | $ 374,395 | 107.58% | $ 356,500 | $ 390,963 | 109.67% |
| **Intergovernmental Revenues** | | | | | | | |
| 331 50 | Disaster Relief Grant | $ 0 | 0 | 0.00% | $ 0 | $ 0 | 0.00% |
| 334 39 | StateGrants | 0 | 12,739 | 0.00% | 0 | 10,922 | 0.00% |
| 335 12 | State Revenue Sharing | 1,150,000 | 1,323,800 | 115.11% | 1,200,000 | 1,392,722 | 116.06% |
| 335 13 | Half Cent Sales Tax | 1,400,000 | 1,666,089 | 119.01% | 1,500,000 | 1,776,224 | 118.41% |
| 335 14 | Mobile Home License | 35,000 | 38,013 | 108.61% | 35,000 | 37,548 | 107.28% |
| 335 15 | Beverage License | 38,000 | 36,752 | 96.72% | 38,000 | 47,214 | 124.25% |
| 335 22 | Casualty Premium Tax | 240,000 | 302,837 | 126.18% | 250,000 | 329,933 | 131.97% |
| 335 41 | Fuel Tax Refund | 55,000 | 53,354 | 97.01% | 55,000 | 53,834 | 97.88% |
| 338 20 | County Shared Occup. License | 55,000 | 36,367 | 66.12% | 55,000 | 53,045 | 96.45% |
| 339 10 | Payments in Lieu of Tax-Hsg Auth | 21,000 | 26,211 | 124.82% | 21,000 | 95,979 | 457.04% |
| | **Total Intergovernmental Rev.** | $ 2,994,000 | $ 3,496,162 | 116.77% | $ 3,154,000 | $ 3,797,422 | 120.40% |

## GENERAL FUND - REVENUE DETAIL

| | | 2015/16 Budget | 2015/16 Actual | Yr. Lapse 100% | 2016/17 Budget | 2016/17 Actual | Yr. Lapse 100% |
|---|---|---|---|---|---|---|---|
| **Charges for Services** | | | | | | | |
| 341 30 | Sale Maps and Publications | $ 500 | 25 | 5.00% | $ 500 | $ 25 | 5.00% |
| 341 40 | Certified Copying & Rec Search | 20,000 | 20,373 | 101.87% | 20,000 | 26,552 | 132.76% |
| 341 41 | Reproduction-City Hall | 0 | 11,295 | 0.00% | 10,500 | 8,832 | 84.11% |
| 341 42 | Application Fee | 15,000 | 17,885 | 119.23% | 15,000 | 18,059 | 120.40% |
| 341 90 | Investigative Surcharge | 25,000 | 30,834 | 123.33% | 25,000 | 29,126 | 116.50% |
| 341 91 | Jury Duty and Fees | 100 | 319 | 318.66% | 100 | 71 | 70.87% |
| 341 92 | Qualifying Fees | 1,000 | 1,952 | 195.20% | 0 | 220 | 0.00% |
| 341 93 | Data Processing Services | 1,000 | 0 | 0.00% | 1,000 | 25 | 2.50% |
| 343 91 | Lot Clearing-Admin. Charge | 7,000 | 7,026 | 100.36% | 8,000 | 7,377 | 92.22% |
| 343 92 | Rotation Towing-Admin. Charge | 25,000 | 29,425 | 117.70% | 25,000 | 24,325 | 97.30% |
| 344 50 | Parking Fines | 0 | 40 | 0.00% | 0 | 14,035 | 0.00% |
| 347 40 | Community Center/Bus. Social | 40,000 | 68,138 | 170.34% | 45,000 | 66,138 | 146.97% |
| 347 42 | Community Center Special Events | 25,000 | 35,545 | 142.18% | 25,000 | 28,355 | 113.42% |
| 347 44 | Community Center Rental Fees | 22,000 | 27,049 | 122.95% | 25,000 | 28,259 | 113.04% |
| 347 48 | Community Center Events | 15,000 | 20,042 | 133.61% | 15,000 | 17,295 | 115.30% |
| 347 49 | Community Center Other | 5,000 | 6,660 | 133.21% | 5,000 | 6,344 | 126.88% |
| 347 92 | Youth Activity Funds | 0 | 9,830 | 0.00% | 1,000 | 10,482 | 1048.15% |
| | **Total Charges for Services** | $ 201,600 | $ 286,438 | 142.08% | $ 221,100 | $ 285,520 | 129.14% |
| **Fines and Forfeitures** | | | | | | | |
| 351 10 | Court Fines | $ 68,000 | $ 65,249 | 95.95% | $ 65,000 | $ 58,354 | 89.78% |
| 351 30 | Police Education | 8,500 | 8,143 | 95.80% | 8,500 | 7,010 | 82.47% |
| 354 10 | Alarm Permit Violations | 2,000 | 0 | 0.00% | 2,000 | 0 | 0.00% |
| 354 20 | License Penalties | 10,000 | 7,503 | 75.03% | 10,000 | 10,159 | 101.59% |
| 354 30 | Animal Control | 4,000 | 9,027 | 225.67% | 4,000 | 6,879 | 171.97% |
| 354 50 | Property Code Violations | 75,000 | 205,912 | 274.55% | 100,000 | 106,736 | 106.74% |
| | **Total Fines & Forfeitures** | $ 167,500 | $ 295,834 | 176.62% | $ 189,500 | $ 189,139 | 99.81% |
| **Miscellaneous Revenues** | | | | | | | |
| 361 10 | Interest on Investments | $ 50,000 | $ 72,085 | 144.17% | $ 50,000 | $ 91,067 | 182.13% |
| 361 33 | Other Interest Earnings | 5,000 | 27,830 | 556.60% | 5,000 | 66,344 | 1326.89% |
| 362 11 | Anchor Carwash | 1,440 | 1,203 | 83.53% | 1,440 | 1,203 | 83.53% |
| 362 13 | Rent - Little Jim | 24,000 | 24,120 | 100.50% | 24,000 | 24,567 | 102.36% |
| 362 13 | Rent-Old City Hall | 27,412 | 27,412 | 100.00% | 27,412 | 27,412 | 100.00% |
| 362 15 | Misc. Rental | 0 | 5,222 | 0.00% | 0 | 2,782 | 0.00% |

## GENERAL FUND - REVENUE DETAIL

| | | 2015/16 Budget | 2015/16 Actual | Yr. Lapse 100% | 2016/17 Budget | 2016/17 Actual | Yr. Lapse 100% |
|---|---|---|---|---|---|---|---|
| **Miscellaneous Revenues contd.** | | | | | | | |
| 363 10 | Liens | 10,000 | 7,516 | 75.16% | 10,000 | 12,961 | 129.61% |
| 363 30 | Demolitions | 2,000 | 0 | 0.00% | 2,000 | 0 | 0.00% |
| 363 40 | Lot Clearing | 2,000 | 22,480 | 1124.01% | 5,000 | 6,223 | 124.47% |
| 363 50 | Interest on Assessments | 100 | 18 | 18.26% | 100 | 53 | 52.71% |
| 364 60 | Emergency Repair Liens | 0 | 5,366 | 0.00% | 500 | 3,073 | 614.51% |
| 364 41 | Sales of Surplus Equipment | 0 | 0 | 0.00% | 0 | 1,762 | 0.00% |
| 365 10 | Sale of Scrap | 0 | 0 | 0.00% | 0 | 0 | 0.00% |
| 366 90 | Other Contributions/Donations | 500 | 5,615 | 1122.94% | 500 | 295,333 | 59066.60% |
| 367 00 | Gain/Loss on Sale of Investments | 5,000 | 11,632 | 232.65% | 5,000 | (1,270) | -25.41% |
| 369 31 | Reimbursement of Expenditures | 120,000 | 175,679 | 146.40% | 125,000 | 91,163 | 72.93% |
| 369 32 | Purchasing Card Rebate | 40,000 | 66,460 | 166.15% | 50,000 | 55,570 | 111.14% |
| 369 34 | Wellness Program | 0 | 8,140 | 0.00% | 0 | 1,650 | 0.00% |
| | *Reimbursement Contractual Services* | | | | | | |
| 369 41 | Marina | 0 | 0 | 0.00% | 0 | 0 | 0.00% |
| 369 43 | Community Dev. Block Grant | 0 | 19,571 | 0.00% | 0 | 37,598 | 0.00% |
| 369 44 | Utilities Authority | 0 | 0 | 0.00% | 0 | 459,916 | 0.00% |
| 369 45 | Stormwater | 600,000 | 414,604 | 69.10% | 860,000 | 537,448 | 62.49% |
| 369 46 | Golf Course | 30,000 | 30,000 | 100.00% | 33,000 | 33,000 | 100.00% |
| 369 47 | Sunrise Theatre | 30,000 | 30,000 | 100.00% | 33,000 | 33,000 | 100.00% |
| 369 49 | Accidents | 15,000 | 2,503 | 16.69% | 15,000 | 0 | 0.00% |
| 369 50 | Other Misc Revenues | 5,000 | 2,471 | 49.43% | 5,000 | 2,881 | 57.63% |
| | *Administrative Reimbursement* | | | | | | |
| 369 51 | Ft. Pierce Redevelopment Agcy | 75,000 | 75,000 | 100.00% | 125,000 | 125,000 | 100.00% |
| 369 52 | Marina | 40,000 | 40,000 | 100.00% | 45,000 | 45,000 | 100.00% |
| 369 53 | Solid Waste | 80,000 | 80,000 | 100.00% | 80,000 | 80,000 | 100.00% |
| 369 54 | Utilities Authority | 0 | 3,097 | 0.00% | 0 | 0 | 0.00% |
| 369 55 | Retirement & Benefit System | 125,000 | 144,000 | 115.20% | 143,000 | 143,000 | 100.00% |
| 369 57 | St. Lucie County | 0 | 0 | 0.00% | 0 | 13,712 | 0.00% |
| 369 59 | Police Department/Detail Work | 30,500 | 63,797 | 209.17% | 30,500 | 68,470 | 224.49% |
| 369 61 | Building Department | 85,000 | 85,000 | 100.00% | 115,000 | 115,000 | 100.00% |
| | *Other Miscellaneous Reimbursements* | | | | | | |
| 369 60 | State of Florida | 389,000 | 397,715 | 102.24% | 359,306 | 458,586 | 127.63% |
| 369 71 | Keep Ft. Pierce Beautiful | 0 | 0 | 0.00% | 0 | 8,357 | 0.00% |
| 369 85 | Settlement of Claims | 25,000 | 16,659 | 66.64% | 20,000 | 112,871 | 564.36% |
| 369 90 | Other Misc. Revenues | 5,000 | 1,887 | 37.73% | 29,000 | 35,638 | 122.89% |
| | **Total Miscellaneous Revenues** | $ 1,821,952 | $ 1,867,083 | 102.48% | $ 2,198,758 | $ 2,989,371 | 135.96% |

## GENERAL FUND - REVENUE DETAIL

| | | 2015/16 Budget | 2015/16 Actual | Yr. Lapse 100% | 2016/17 Budget | 2016/17 Actual | Yr. Lapse 100% |
|---|---|---|---|---|---|---|---|
| **Interfund Transfers** | | | | | | | |
| 381 04 | Transfer from Construction Fund | $ 0 | 0 | 0.00% | $ 0 | $ 283,500 | 0.00% |
| 381 23 | Transfer from Special Revenue | $ 50,000 | $ 0 | 0.00% | $ 0 | $ 12,039 | 0.00% |
| 381 90 | Intergovernmental Fund | 0 | 7,572 | 0.00% | 0 | 0 | 0.00% |
| 381 91 | FPRA Debt Services | 2,832,437 | 2,637,094 | 93.10% | 2,614,221 | 2,627,870 | 100.52% |
| 381 92 | Debt Service Fund | 0 | 0 | 0.00% | 0 | 3,472,464 | 0.00% |
| | **Total Interfund Transfers** | $ 2,882,437 | $ 2,644,667 | 91.75% | $ 2,614,221 | $ 6,395,873 | 244.66% |
| **Contribution from Enterprise Funds** | | | | | | | |
| 382 10 | Electricity | $ 3,871,140 | $ 3,871,140 | 100.00% | $ 4,024,362 | $ 4,024,362 | 100.00% |
| 382 20 | Water | 904,638 | 904,638 | 100.00% | 930,600 | 930,600 | 100.00% |
| 382 30 | Gas | 242,196 | 242,196 | 100.00% | 251,100 | 251,100 | 100.00% |
| 382 40 | Sewer | 771,492 | 771,492 | 100.00% | 746,850 | 746,850 | 100.00% |
| 382 41 | UA Other | 3,306 | 19,836 | 0.00% | 348 | 15,873 | 4561.21% |
| 382 42 | UA Advance | 0 | 0 | 0.00% | 0 | 0 | 0.00% |
| 382 50 | Solid Waste Transfer | 1,200,000 | 345,000 | 28.75% | 800,000 | 615,000 | 76.88% |
| 382 60 | Marina Transfer | 150,000 | 150,000 | 100.00% | 250,000 | 250,000 | 100.00% |
| 382 90 | Golf Course Transfer | 28,000 | 28,000 | 100.00% | 28,000 | 7,000 | 25.00% |
| | **Total Contribution from Enterprise F** | $ 7,170,772 | $ 6,332,302 | 88.31% | $ 7,031,260 | $ 6,840,785 | 97.29% |
| **Contribution from Special Revenue Fund** | | | | | | | |
| 383 00 | Loan Proceeds | $ 1,400,000 | $ 1,400,000 | 100.00% | $ 0 | $ 0 | 0.00% |
| | **Total Contribution from SR Funds** | $ 1,400,000 | $ 1,400,000 | 100.00% | $ 0 | $ 0 | 0.00% |
| | **Total Revenue** | $ 35,929,757 | $ 36,212,408 | 100.79% | $ 35,692,714 | $ 41,236,409 | 115.53% |
| | Appropriated Fund Balance | 550,000 | 0 | 0.00% | 710,407 | 0 | 0.00% |
| | Restricted Revenue | (400,000) | 0 | 0.00% | (600,000) | (600,000) | 100.00% |
| | Unrestricted Fund Balance | (226,494) | 0 | 0.00% | 0 | 0 | 0.00% |
| **TOTAL GENERAL FUND RESOURCES** | | **$ 35,853,263** | **$ 36,212,408** | **101.00%** | **$ 35,803,121** | **$ 40,636,409** | **113.50%** |

## GENERAL FUND - SUMMARY OF EXPENDITURES BY DEPARTMENT

| | | 2015/16 Adopted | 2015/16 Actual | Yr. Lapse 100% | 2016/17 Adopted | 2016/17 Actual | Yr. Lapse 100% |
|---|---|---|---|---|---|---|---|
| **City Commission** | | | | | | | |
| 10 00 | Personnel Services | $ 167,861 | $ 166,002 | 98.89% | $ 203,103 | $ 185,899 | 91.53% |
| | Operating Expense | 40,500 | 38,561 | 95.21% | 40,500 | 45,096 | 111.35% |
| | Capital Outlay | 0 | 0 | 0.00% | 0 | 5,594 | 0.00% |
| | | $ 208,361 | $ 204,563 | 98.18% | $ 243,603 | $ 236,589 | 97.12% |
| **City Manager** | | | | | | | |
| 13 00 | Personnel Services | $ 545,425 | $ 485,153 | 88.95% | $ 464,688 | $ 479,918 | 103.28% |
| | Operating Expense | 60,594 | 55,713 | 91.95% | 70,594 | 68,570 | 97.13% |
| | Capital Outlay | 0 | 3,486 | 0.00% | 0 | 4,304 | 0.00% |
| | | $ 606,019 | $ 544,352 | 89.82% | $ 535,282 | $ 552,792 | 103.27% |
| **City Attorney** | | | | | | | |
| 14 00 | Personnel Services | $ 0 | $ 220,220 | 0.00% | $ 545,872 | $ 546,105 | 100.04% |
| | Operating Expense | 605,108 | 634,341 | 104.83% | 150,700 | 66,993 | 44.45% |
| | Capital Outlay | 0 | 8,651 | 0.00% | 0 | 0 | 0.00% |
| | | $ 605,108 | $ 863,212 | 142.65% | $ 696,572 | $ 613,098 | 88.02% |
| **City Clerk** | | | | | | | |
| 16 00 | Personnel Services | $ 251,681 | $ 261,203 | 103.78% | $ 283,096 | $ 272,288 | 96.18% |
| | Operating Expense | 33,115 | 28,245 | 85.29% | 33,115 | 33,532 | 101.26% |
| | Capital Outlay | 0 | 1,487 | 0.00% | 0 | 974 | 0.00% |
| | | $ 284,796 | $ 290,935 | 102.16% | $ 316,211 | $ 306,794 | 97.02% |
| **Administrative Services** | | | | | | | |
| 22 00 | Personnel Services | $ 521,661 | $ 630,443 | 120.85% | $ 0 | $ 0 | 0.00% |
| | Operating Expense | 68,515 | 82,406 | 120.27% | 0 | 0 | 0.00% |
| | Capital Outlay | 0 | 5,825 | 0.00% | 0 | 0 | 0.00% |
| | | $ 590,176 | $ 718,674 | 121.77% | $ 0 | $ 0 | 0.00% |

## GENERAL FUND - SUMMARY OF EXPENDITURES BY DEPARTMENT

| | | 2015/16 Adopted | 2015/16 Actual | Yr. Lapse 100% | 2016/17 Adopted | 2016/17 Actual | Yr. Lapse 100% |
|---|---|---|---|---|---|---|---|
| **Human Resources** | | | | | | | |
| 22 00 | Personnel Services | $ 0 | $ 0 | 0.00% | $ 374,747 | $ 386,806 | 103.22% |
| | Operating Expense | 0 | 0 | 0.00% | 47,753 | 63,915 | 133.85% |
| | Capital Outlay | 0 | 0 | 0.00% | 0 | 0 | 0.00% |
| | | $ 0 | $ 0 | 0.00% | $ 422,500 | $ 450,721 | 106.68% |
| **Finance** | | | | | | | |
| 24 00 | Personnel Services | $ 699,572 | $ 635,655 | 90.86% | $ 730,928 | $ 725,882 | 99.31% |
| | Operating Expense | 36,700 | 80,766 | 220.07% | 42,500 | 31,417 | 73.92% |
| | Capital Outlay | 0 | 4,718 | 0.00% | 0 | 0 | 0.00% |
| | | $ 736,272 | $ 721,140 | 97.94% | $ 773,428 | $ 757,299 | 97.91% |
| **Information Technology** | | | | | | | |
| 25 00 | Personnel Services | $ 538,242 | $ 431,118 | 80.10% | $ 549,800 | $ 482,653 | 87.79% |
| | Operating Expense | 456,400 | 364,680 | 79.90% | 523,700 | 399,763 | 76.33% |
| | Capital Outlay | 0 | 9,451 | 0.00% | 0 | 6,594 | 0.00% |
| | | $ 994,642 | $ 805,250 | 80.96% | $ 1,073,500 | $ 889,010 | 82.81% |
| **Purchasing** | | | | | | | |
| 26 00 | Personnel Services | $ 0 | $ 0 | 0.00% | $ 276,475 | $ 258,704 | 93.57% |
| | Operating Expense | 0 | 0 | 0.00% | 24,962 | 17,594 | 70.48% |
| | Capital Outlay | 0 | 0 | 0.00% | 0 | 4,817 | 0.00% |
| | | $ 0 | $ 0 | 0.00% | $ 301,437 | $ 281,114 | 93.26% |
| **Planning** | | | | | | | |
| 29 01 | Personnel Services | $ 395,821 | $ 400,216 | 101.11% | $ 422,756 | $ 426,708 | 100.93% |
| | Operating Expense | 56,016 | 43,932 | 78.43% | 56,016 | 37,823 | 67.52% |
| | Capital Outlay | 0 | 768 | 0.00% | 0 | 990 | 0.00% |
| | | $ 451,837 | $ 444,916 | 98.47% | $ 478,772 | $ 465,521 | 97.23% |

## GENERAL FUND - SUMMARY OF EXPENDITURES BY DEPARTMENT

| | | 2015/16 Adopted | 2015/16 Actual | Yr. Lapse 100% | 2016/17 Adopted | 2016/17 Actual | Yr. Lapse 100% |
|---|---|---|---|---|---|---|---|
| **Community Response/Code Enforcement** | | | | | | | |
| 29 03 | Personnel Services | $ 537,838 | $ 549,601 | 102.19% | $ 561,810 | $ 547,250 | 97.41% |
| | Operating Expense | 342,885 | 355,637 | 103.72% | 332,885 | 315,817 | 94.87% |
| | Capital Outlay | 0 | 2,675 | 0.00% | 0 | 1,331 | 0.00% |
| | | $ 880,723 | $ 907,913 | 103.09% | $ 894,695 | $ 864,398 | 96.61% |
| **Police** | | | | | | | |
| Combined | Personnel Services | $ 11,062,318 | $ 10,722,956 | 96.93% | $ 11,642,606 | $ 12,029,716 | 103.32% |
| | Operating Expense | 1,802,405 | 1,482,853 | 82.27% | 1,721,405 | 1,579,172 | 91.74% |
| | Capital Outlay | 0 | 47,682 | 0.00% | 0 | 146,865 | 0.00% |
| | | $ 12,864,723 | $ 12,253,491 | 95.25% | $ 13,364,011 | $ 13,755,754 | 102.93% |
| **Public Works/Director** | | | | | | | |
| 40 02 | Personnel Services | $ 58,729 | $ 58,707 | 99.96% | $ 58,351 | $ 65,906 | 112.95% |
| | Operating Expense | 35,000 | 20,204 | 57.73% | 35,000 | 22,033 | 62.95% |
| | Capital Outlay | 0 | 0 | 0.00% | 0 | 0 | 0.00% |
| | | $ 93,729 | $ 78,911 | 84.19% | $ 93,351 | $ 87,938 | 94.20% |
| **Public Works/Fleet Maintenance** | | | | | | | |
| 40 03 | Personnel Services | $ 458,602 | $ 447,529 | 97.59% | $ 587,031 | $ 567,651 | 96.70% |
| | Operating Expense | 33,950 | 33,192 | 97.77% | 33,950 | 31,673 | 93.29% |
| | Capital Outlay | 0 | 0 | 0.00% | 0 | 0 | 0.00% |
| | | $ 492,552 | $ 480,721 | 97.60% | $ 620,981 | $ 599,324 | 96.51% |
| **Public Works/Facilities Maintenance** | | | | | | | |
| 40 04 | Personnel Services | $ 593,431 | $ 608,903 | 102.61% | $ 613,824 | $ 623,715 | 101.61% |
| | Operating Expense | 285,750 | 351,296 | 122.94% | 285,750 | 472,694 | 165.42% |
| | Capital Outlay | 0 | 0 | 0.00% | 0 | 0 | 0.00% |
| | | $ 879,181 | $ 960,198 | 109.22% | $ 899,574 | $ 1,096,409 | 121.88% |

## GENERAL FUND - SUMMARY OF EXPENDITURES BY DEPARTMENT

| | | 2015/16 Adopted | 2015/16 Actual | Yr. Lapse 100% | 2016/17 Adopted | 2016/17 Actual | Yr. Lapse 100% |
|---|---|---|---|---|---|---|---|
| **Public Works/Parks & Grounds** | | | | | | | |
| 40 05 | Personnel Services | $ 1,181,534 | $ 1,128,428 | 95.51% | $ 1,249,853 | $ 1,336,138 | 106.90% |
| | Operating Expense | 727,200 | 593,159 | 81.57% | 787,200 | 708,366 | 89.99% |
| | Capital Outlay | 0 | 10,100 | 0.00% | 0 | 5,750 | 0.00% |
| | | $ 1,908,734 | $ 1,731,688 | 90.72% | $ 2,037,053 | $ 2,050,255 | 100.65% |
| **Public Works/Streets & Drainage** | | | | | | | |
| 4006 | Personnel Services | $ 893,126 | $ 838,699 | 93.91% | $ 877,094 | $ 992,192 | 113.12% |
| | Operating Expense | 811,450 | 877,193 | 108.10% | 811,450 | 965,663 | 119.00% |
| | Capital Outlay | 0 | 0 | 0.00% | 0 | 0 | 0.00% |
| | | $ 1,704,576 | $ 1,715,892 | 100.66% | $ 1,688,544 | $ 1,957,855 | 115.95% |
| **Engineering** | | | | | | | |
| 44 00 | Personnel Services | $ 693,019 | $ 674,879 | 97.38% | $ 725,980 | $ 746,021 | 102.76% |
| | Operating Expense | 406,232 | 325,125 | 80.03% | 431,474 | 363,771 | 84.31% |
| | Capital Outlay | 0 | 1,941 | 0.00% | 0 | 777 | 0.00% |
| | | $ 1,099,251 | $ 1,001,945 | 91.15% | $ 1,157,454 | $ 1,110,569 | 95.95% |
| **Riverwalk Center** | | | | | | | |
| 4504 | Personnel Services | $ 115,147 | $ 118,218 | 102.67% | $ 119,572 | $ 118,447 | 99.06% |
| | Operating Expense | 35,250 | 54,715 | 155.22% | 35,250 | 54,660 | 155.06% |
| | Capital Outlay | 0 | 0 | 0.00% | 0 | 0 | 0.00% |
| | | $ 150,397 | $ 172,933 | 114.98% | $ 154,822 | $ 173,107 | 111.81% |

## GENERAL FUND - SUMMARY OF EXPENDITURES BY DEPARTMENT

| | | 2015/16 Adopted | 2015/16 Actual | Yr. Lapse 100% | 2016/17 Adopted | 2016/17 Actual | Yr. Lapse 100% |
|---|---|---|---|---|---|---|---|
| **Administrative** | | | | | | | |
| 60 00 | Personnel Services | $ 390,977 | $ 437,632 | 111.93% | $ 393,000 | $ 464,384 | 118.16% |
| | Operating Expense | 3,604,697 | 3,409,396 | 94.58% | 4,034,144 | 4,048,230 | 100.35% |
| | Capital Outlay | 1,525,000 | 1,109,598 | 72.76% | 925,000 | 3,066,695 | 331.53% |
| | Grants and Aid | 220,000 | 203,795 | 92.63% | 240,000 | 254,396 | 106.00% |
| | Non-Oper. Transfer | 5,561,512 | 5,061,748 | 91.01% | 4,459,187 | 5,409,961 | 121.32% |
| | | $ 11,302,186 | $ 10,222,169 | 90.44% | $ 10,051,331 | $ 13,243,666 | 131.76% |
| **All Departments** | | | | | | | |
| | Personnel Services | $ 19,104,984 | $ 18,815,563 | 98.49% | $ 20,680,586 | $ 21,256,382 | 102.78% |
| | Operating Expense | 9,441,767 | 8,831,413 | 93.54% | 9,498,348 | 9,326,782 | 98.19% |
| | Capital Outlay | 1,525,000 | 1,206,382 | 79.11% | 925,000 | 3,244,692 | 350.78% |
| | Grants and Aid | 220,000 | 203,795 | 92.63% | 240,000 | 254,396 | 106.00% |
| | Non-Oper. Transfer | 5,561,512 | 5,061,748 | 91.01% | 4,459,187 | 5,409,961 | 121.32% |
| **TOTAL GENERAL FUND EXPENDITURES** | | **$ 35,853,263** | **$ 34,118,903** | **95.16%** | **$ 35,803,121** | **$ 39,492,213** | **110.30%** |

| Fund Title: | FPRA | Department: | FPRA |
|---|---|---|---|
| Fund/Division Number: | | Division: | |

| | | 2015/16 Adopted | 2015/16 Actual | Yr. Lapse 100% | 2016/17 Adopted | 2016/17 Actual | Yr. Lapse 100% |
|---|---|---|---|---|---|---|---|
| **Taxes** | | | | | | | |
| 311 10 | Ad Valorem Taxes | $ 4,445,548 | $ 4,443,310 | 99.95% | $ 5,020,612 | $ 5,127,986 | 102.14% |
| | **Total Taxes** | $ 4,445,548 | $ 4,443,310 | 99.95% | $ 5,020,612 | $ 5,127,986 | 102.14% |
| **Licenses and Permits** | | | | | | | |
| 329 20 | Lot Clearing | $ 0 | $ 104 | 0.00% | $ 0 | $ 0 | 0.00% |
| | **Total Licenses and Permits** | $ 0 | $ 104 | 0.00% | $ 0 | $ 0 | 0.00% |
| **Intergovernmental** | | | | | | | |
| 334 90 | EPA Brownfield | $ 0 | $ 0 | 0.00% | $ 0 | $ 0 | 0.00% |
| 347 54 | Marina Dockage | 75,000 | 48,883 | 65.18% | 0 | 13,472 | 0.00% |
| 384 90 | Other State Grants | 0 | 0 | 0.00% | 0 | 0 | 0.00% |
| | **Total Intergovernmental** | $ 75,000 | $ 48,883 | 65.18% | $ 0 | $ 13,472 | 0.00% |
| **Miscellaneous Revenue** | | | | | | | |
| 343 91 | Admin Charge-Liens | $ 0 | 200 | 0.00% | $ 0 | $ 0 | 0.00% |
| 361 10 | Interest on Investments | $ 500 | 6,126 | 1225.11% | $ 500 | $ 7,726 | 1545.14% |
| 362 14 | Leases | 148,000 | 167,609 | 113.25% | 148,000 | 203,672 | 137.62% |
| 363 10 | Liens | 1,000 | 175 | 17.54% | 1,000 | 53 | 5.30% |
| 366 90 | FPAT | 0 | 1,350 | 0.00% | 0 | 0 | 0.00% |
| 369 31 | Reimburse - Expenditures | 9,000 | 21,421 | 238.01% | 9,000 | 6,290 | 69.89% |
| 369 32 | Other Misc. Revenues | 2,000 | 998,417 | 0.00% | 0 | 440,219 | 0.00% |
| 369 40 | Reimburse - Contract Svcs. | 0 | 300,000 | 0.00% | 0 | 0 | 0.00% |
| 369 44 | Reimburse - Contract Svcs./FPUA | 0 | 627,365 | 0.00% | 0 | 23,283 | 0.00% |
| 388 10 | Sale of Land | 0 | 0 | 0.00% | 0 | 0 | 0.00% |
| | **Total Miscellaneous Revenues** | $ 160,500 | $ 2,122,663 | 1322.53% | $ 158,500 | $ 681,243 | 429.81% |
| **Transfers** | | | | | | | |
| 381 01 | Transfer from General Fund | $ 1,676,422 | $ 1,451,422 | 86.58% | $ 737,543 | $ 1,526,901 | 207.03% |
| 381 04 | Transfer from Construction Fund | 0 | 5,929 | 0.00% | 0 | 0 | 0.00% |
| | **Total Transfers** | $ 1,676,422 | $ 1,457,351 | 86.93% | $ 737,543 | $ 1,526,901 | 207.03% |
| | **Total Revenues** | **$ 6,357,470** | **$ 8,072,311** | 126.97% | **$ 5,916,655** | **$ 7,349,601** | 124.22% |
| Prior Year Carry-Overs Operating | | $ 0 | $ 0 | 0.00% | $ 0 | $ 0 | 0.00% |
| | **TOTAL RESOURCES** | **$ 6,357,470** | **$ 8,072,311** | 126.97% | **$ 5,916,655** | **$ 7,349,601** | 124.22% |

| Fund Title: | FPRA | Department: | FPRA |
|---|---|---|---|
| Fund/Division Number: | | Division: | |

| | 2015/16 Adopted | 2015/16 Actual | Yr. Lapse 100% | 2016/17 Adopted | 2016/17 Actual | Yr. Lapse 100% |
|---|---|---|---|---|---|---|
| **Total Personnel Services** | $ 0 | $ 0 | 0.00% | $ 0 | $ 0 | 0.00% |
| **Total Operating Expense** | 323,500 | 326,920 | 101.06% | 321,914 | 805,642 | 250.27% |
| **Total Capital Outlay** | 0 | 650,406 | 0.00% | 0 | 839,079 | 0.00% |
| **Total Grants - Programs & Projects** | 20,000 | 12,852 | 64.26% | 20,000 | 22,395 | 111.97% |
| **Total Transfers** | 6,013,970 | 3,301,087 | 54.89% | 5,576,741 | 5,590,390 | 100.24% |
| **TOTAL APPROPRIATIONS** | **$ 6,357,470** | **$ 4,291,266** | 67.50% | **$ 5,918,655** | **$ 7,257,506** | 122.62% |

| Fund Title: Urban Redevelopment | Department: CDBG, SHIP, NSP |
|---|---|
| Fund/Division Number: | Division: |

| | | 2015/16 Adopted | 2015/16 Actual | Yr. Lapse 100% | 2016/17 Adopted | 2016/17 Actual | Yr. Lapse 100% |
|---|---|---|---|---|---|---|---|
| **CDBG REVENUE** | | | | | | | |
| 331 50 | Disaster Relief | $ 0 | 0 | 0.00% | $ 0 | $ 0 | 0.00% |
| 331 90 | Entitlement Grant | 474,148 | $ 535,203 | 112.88% | 484,925 | $ 515,251 | 106.25% |
| 331 92 | Program Income | 5,000 | 1,706 | 34.12% | 6,000 | 0 | 0.00% |
| 369 90 | Miscellaneous Revenue | 0 | 37,250 | 0.00% | 0 | 500 | 0.00% |
| 361 39 | Other Interest Earnings | 1,000 | 2,734 | 273.44% | 1,500 | 7,043 | 469.53% |
| 369 31 | Reimb. of Expenditures | 0 | 0 | 0.00% | 0 | 0 | 0.00% |
| 369 41 | Contractual Svcs./CDBG | 0 | 0 | 0.00% | 0 | 25,295 | 0.00% |
| | Carry Over Funding | 793,885 | 0 | 0.00% | 374,036 | 0 | 0.00% |
| | **TOTAL REVENUE** | $ 1,274,033 | $ 576,893 | 45.28% | $ 866,461 | $ 548,089 | 63.26% |
| **TRANSFERS** | | | | | | | |
| 369 41 | Contractual Svc./CBDG | $ 0 | $ 0 | 0.00% | $ 0 | $ 0 | 0.00% |
| 381 10 | Transfer from General | 86,072 | 0 | 0.00% | 0 | 0 | 0.00% |
| | **TOTAL TRANSFERS** | $ 86,072 | $ 0 | 0.00% | $ 0 | $ 0 | 0.00% |
| | **TOTAL CDBG REVENUE** | **$ 1,360,105** | **$ 576,893** | **42.42%** | **$ 866,461** | **$ 548,089** | **63.26%** |

| Fund Title: Department of Urban Redevelopment<br>Fund/Division Number: | | | | CDBG, SHIP, NSP | | |
|---|---|---|---|---|---|---|
| | 2015/16 Adopted | 2015/16 Actual | Yr. Lapse 100% | 2016/17 Adopted | 2016/17 Actual | Yr. Lapse 100% |
| **CDBG Department** | | | | | | |
| **Administrative** | | | | | | |
| 10 10 Personnel Services | $ 64,830 | $ 156,789 | 241.85% | $ 157,266 | $ 156,333 | 99.41% |
| 34 90 Administrative-Contractual | 30,000 | 16,369 | 54.56% | 0 | 0 | 0.00% |
| 49 60 Administrative Expenses | 86,072 | 0 | 0.00% | 5,000 | 16,466 | 329.32% |
| **Rehabilitation Department** | | | | | | |
| 83 10 Housing Rehabilitation | $ 0 | $ 1,741 | 0.00% | $ 20,000 | $ 27,334 | 136.67% |
| 83 30 Senior Citizens Housing | 0 | 0 | 0.00% | 0 | 32,091 | 0.00% |
| 83 40 Other Grants & Aids | 0 | 266,789 | 0.00% | 5,000 | 16,750 | 335.00% |
| 83 42 Historic | 0 | 0 | 0.00% | 0 | 350 | 0.00% |
| 83 45 Weatherization | 0 | 0 | 0.00% | 20,000 | 20,000 | 100.00% |
| 83 82 Code Enforcement | 50,000 | 20,493 | 40.99% | 0 | 37,598 | 0.00% |
| **Economic Development** | | | | | | |
| 83 80 Lincoln Park Mainstreet | $ 50,000 | $ 50,000 | 100.00% | $ 50,000 | $ 50,000 | 100.00% |
| 83 80 Fort Pierce Mainstreet | 50,000 | 50,000 | 100.00% | 50,000 | 50,050 | 100.10% |
| 83 83 Micro -Bus/Economic Development | 120,000 | 22,423 | 18.69% | 45,000 | 105,065 | 233.48% |
| 83 83 Lincoln Park/Orange Ave. Bus Dev | 0 | 0 | 0.00% | 45,000 | 7,059 | 15.69% |
| 83 86 Local Art/Cultural Heritage | 45,318 | 0 | 0.00% | 30,000 | 21,720 | 72.40% |
| 86 86 FPAT | 0 | 0 | 0.00% | 0 | 4,098 | 0.00% |
| 83 87 Commercial Facades | 0 | 0 | 0.00% | 50,000 | 3,116 | 6.23% |
| **Public Service** | | | | | | |
| 83 97 Public Facility Improvements | $ 0 | $ 0 | 0.00% | $ 25,000 | $ 3,000 | 12.00% |
| 83 97 Public Amenities | 0 | 0 | 0.00% | 70,000 | 1,894 | 2.71% |
| 83 98 Youth and Children Projects | 70,000 | 0 | 0.00% | 23,940 | 42,995 | 179.60% |
| **Total CDBG** | **$ 566,220** | **$ 584,603** | **103.25%** | **$ 596,206** | **$ 595,920** | **99.95%** |
| **Prior Grants-Programs & Projects** | | | | | | |
| 83 10 Housing Rehabilitation (Roll-over) | $ 53,007 | $ 0 | 0.00% | $ 1,840 | $ 0 | 0.00% |
| 83 41 Commercial Facades (Roll-over) | 67,978 | 23,359 | 34.36% | 4,218 | 0 | 0.00% |
| 83 30 Senior Citizen Housing/Security | 0 | 0 | 0.00% | 37,500 | 0 | 0.00% |
| 83 82 Code Enforcement | 15,385 | 0 | 0.00% | 0 | 0 | 0.00% |
| 83 83 Micro-Bus/Economic Development | 32,764 | 0 | 0.00% | 69,601 | 0 | 0.00% |
| 83 85 Community Focal Point | 4,535 | 1,279 | 0.00% | 0 | 0 | 0.00% |
| 83 86 Local Art/Cultural Heritage | 23,876 | 0 | 0.00% | 23,950 | 0 | 0.00% |
| 83 98 Public Service | 35,079 | 18,323 | 52.23% | 25,000 | 293 | 1.17% |
| 83 99 Weatherization | 0 | 2,240 | 0.00% | 0 | | 0.00% |
| 83 99 Infrastructure Improvements | 361,669 | 0 | 0.00% | 0 | | 0.00% |
| 83 '99 Playground Equipment (Roll Over) | 50,000 | 0 | 0.00% | 0 | 0 | 0.00% |
| Administrative Expenses | 78,215 | 0 | 0.00% | 64,894 | 0 | 0.00% |
| **Total Roll-Over Expenditures** | **$ 722,508** | **$ 45,201** | **6.26%** | **$ 227,003** | **$ 293** | **0.13%** |

| Fund Title: Department of Urban Redevelopment<br>Fund/Division Number: | | CDBG, SHIP, NSP | | | | | |
|---|---|---|---|---|---|---|---|
| | | 2015/16 Adopted | 2015/16 Actual | Yr. Lapse 100% | 2016/17 Adopted | 2016/17 Actual | Yr. Lapse 100% |
| **Capital** | | | | | | | |
| 63 10 | Road & Bridge Improvements | $ 0 | $ 0 | 0.00% | $ 0 | $ 0 | 0.00% |
| 63 20 | Other Improvements | 0 | 0 | 0.00% | 43,252 | 13,350 | 30.87% |
| 64 45 | Other Equipment | 0 | 4,354 | 0.00% | 0 | 7,746 | 0.00% |
| 99 99 | Unencumbered | 71,377 | 0 | 0.00% | 0 | 0 | 0.00% |
| | **Total Capital** | **$ 71,377** | **$ 4,354** | 0.00% | **$ 43,252** | **$ 21,096** | 48.77% |
| ` | **TOTAL CDBG APPROPRIATIONS** | **$ 1,360,105** | **$ 634,158** | **46.63%** | **$ 866,461** | **$ 617,308** | **71.24%** |
| **SHIP REVENUES** | | | | | | | |
| 344 90 | SHIP | $ 204,112 | $ 176,457 | 86.45% | $ 267,860 | $ 270,480 | 100.98% |
| 334 50 | Program Income | 0 | 34,026 | 0.00% | 40,000 | 50 | 0.13% |
| 361 10 | Interest on Investments | 0 | 3,700 | 0.00% | 500 | 3,116 | 623.21% |
| 369 90 | Other Misc. Revenues | 0 | 12,000 | 0.00% | 0 | 7,050 | 0.00% |
| 381 90 | Program Income HHR | 0 | 0 | 0.00% | 0 | 0 | 0.00% |
| | Carry Over Funding | 44,506 | 0 | 0.00% | 854,760 | 0 | 0.00% |
| | **Total SHIP Revenue** | **$ 248,618** | **$ 226,183** | **90.98%** | **$ 1,163,120** | **$ 280,696** | **24.13%** |
| **SHIP EXPENDITURES** | | | | | | | |
| Total Operating Expenses | | $ 20,411 | $ 2,240 | 10.97% | $ 91,786 | $ 1,341 | 1.46% |
| Total Grants-Programs &Projects | | 228,207 | 26,471 | 11.60% | 1,071,334 | 89,639 | 8.37% |
| | **TOTAL SHIP APPROPRIATIONS** | **$ 248,618** | **$ 28,711** | **11.55%** | **$ 1,163,120** | **$ 90,980** | **7.82%** |

| Fund Title: Urban Redevelopment | Department: Grant Administration |
|---|---|
| Fund/Division Number: | Division: |

| | 2015/16 Adopted | 2015/16 Actual | Yr. Lapse 100% | 2016/17 Adopted | 2016/17 Actual | Yr. Lapse 100% |
|---|---|---|---|---|---|---|
| **Intergovernmental** | | | | | | |
| 334 50 Program Income | $ 50,000 | 566,682 | 1133.36% | $ 0 | $ 18,254 | 0.00% |
| **Total Intergovernmental** | $ 50,000 | $ 566,682 | 1133.36% | $ 0 | $ 18,254 | 0.00% |
| **Miscellaneous Revenue** | | | | | | |
| 361 10 Interest on Investments | $ 250 | $ 1,201 | 480.52% | $ 250 | $ 7,223 | 2889.12% |
| 361 38 HHRP Loan | 25,000 | 64,263 | 257.05% | 20,000 | 922 | 4.61% |
| 362 30 Miscellaneous | 0 | 0 | 0.00% | 0 | 0 | 0.00% |
| 369 31 Reimbursement of Expenditures | 0 | 72,930 | 0.00% | 0 | 0 | 0.00% |
| 369 33 Escrow Reimbursement | 43,000 | 35,362 | 82.24% | 0 | 0 | 0.00% |
| 369 40 Allegany Fransiscan Ministries | 0 | 0 | 0.00% | 0 | 66,750 | 0.00% |
| 369 90 Other Misc. Revenues | 0 | 270 | 0.00% | 0 | 0 | 0.00% |
| Carry Forward Funding | 125,000 | 0 | 0.00% | 160,000 | 0 | 0.00% |
| **Total Miscellaneous Revenues** | $ 193,250 | $ 174,026 | 90.05% | $ 180,250 | $ 74,895 | 41.55% |
| **Interfund Transfer** | | | | | | |
| 381 10 General Fund | $ 0 | $ 0 | 0.00% | $ 0 | $ 0 | 0.00% |
| **Total Interfund Transfers** | $ 0 | $ 0 | 0.00% | $ 0 | $ 0 | 0.00% |
| **Total Revenues** | **$ 243,250** | **$ 740,708** | 304.50% | **$ 180,250** | **$ 93,149** | 51.68% |
| **TOTAL RESOURCES** | **$ 243,250** | **$ 740,708** | 304.50% | **$ 180,250** | **$ 93,149** | 51.68% |

| Fund Urban Redevlopment<br>Fund/Division Number: | | | | Department: Grant Administration<br>Division: | | |
|---|---|---|---|---|---|---|
| | 2015/16 Adopted | 2015/16 Actual | Yr. Lapse 100% | 2016/17 Adopted | 2016/17 Actual | Yr. Lapse 100% |
| **Total Personnel Services** | $ 0 | $ 0 | 0.00% | $ 0 | $ 8,163 | 0.00% |
| **Total Operating Expense** | 243,250 | 35,463 | 14.58% | 180,250 | 2,615 | 1.45% |
| **Total Capital Outlay** | 0 | 0 | 0.00% | 0 | 0 | 0.00% |
| **Total Grants - Private Orgs.** | 0 | 0 | 0.00% | 0 | 0 | 0.00% |
| **Total Grants - Programs & Projects** | 0 | 0 | 0.00% | 0 | 0 | 0.00% |
| **Total Transfers** | 0 | 0 | 0.00% | 0 | 0 | 0.00% |
| **TOTAL APPROPRIATIONS** | **$ 243,250** | **$ 35,463** | 14.58% | **$ 180,250** | **$ 10,778** | 5.98% |

**CITY OF FORT PIERCE**

**MARINA FUND (401)**

**OPERATING STATEMENT**

**SEPTEMBER 30, 2017**

**4TH QUARTER-SEPT'16 to 4TH QUARTER-SEPT '17 COMPARISON**

| | 4TH QUARTER 9/30/2016 | 4TH QUARTER 9/30/2017 |
|---|---|---|
| ***OPERATING INCOME*** | | |
| CHARGES FOR SERVICES | $ 1,357,573 | $ 1,598,291 |
| MISCELLANEOUS | 1,498,689 | 2,129,110 |
| GRANTS | 0 | 0 |
| ***TOTAL OPERATING INCOME*** | $ 2,856,262 | $ 3,727,401 |
| ***OPERATING EXPENSES*** | | |
| PERSONAL SERVICES | $ 327,591 | $ 362,935 |
| ADMINISTRATIVE CHARGES | 94,953 | 123,714 |
| CONTRACTUAL FEES | 176,680 | 332,309 |
| UTILITIES | 115,439 | 127,635 |
| COST OF GOODS SOLD | 764,103 | 998,920 |
| DEPRECIATION | 918,620 | 1,118,532 |
| OTHER OPERATING EXPENSES | 567,341 | 712,499 |
| ***TOTAL OPERATING EXPENSES*** | $ 2,964,727 | $ 3,776,543 |
| **NET OPERATING INCOME (LOSS)** | ($108,465) | ($49,142) |
| ***NON-OPERATING REVENUES*** | | |
| INTEREST ON INVESTMENTS | $ 1,599 | $ 4,587 |
| TRANSFER FROM OTHER FUNDS | 0 | 0 |
| OTHER NON-OPERATING REVENUES | 0 | 0 |
| | $ 1,599 | $ 4,587 |
| ***NON-OPERATING EXPENSES*** | | |
| DEBT SERVICE | $ 447,337 | $ 212,897 |
| OTHER NON-OPERATING EXPENSES | 30,914 | 27,313 |
| TRANSFER-OUT | 150,000 | 250,000 |
| ***TOTAL NON-OPERATING EXPENSES*** | $ 628,251 | $ 490,210 |
| **NET NON-OPERATING INCOME (LOSS)** | ($626,652) | ($485,623) |
| ***NET INCOME (LOSS)*** | ($735,116) | ($534,764) |

| Fund Title: Marina | | | | Department: Marina | | |
|---|---|---|---|---|---|---|
| Fund/Division Number: | | | | Division: | | |
| | 2015/16 Adopted | 2015/16 Actual | Yr. Lapse 100% | 2016/17 Adopted | 2016/17 Actual | Yr. Lapse 100% |
| **Grants** | | | | | | |
| 331 50 Disaster Relief/Federal | $0 | $ 0 | 0.00% | $0 | $ 0 | 0.00% |
| 334 39 Physical Environmental Grant | 470,000 | 0 | 0.00% | 470,000 | 0 | 0.00% |
| 334 50 Disaster Relief | 0 | 0 | 0.00% | 0 | 0 | 0.00% |
| **Total Grants** | $ 470,000 | $ 0 | 0.00% | $ 470,000 | $ 0 | 0.00% |
| **Charges for Services** | | | | | | |
| 347 54 Dockage | $ 875,000 | $ 786,250 | 89.86% | $ 800,000 | $ 1,059,764 | 132.47% |
| 347 55 Transient Dockage | 664,348 | 571,324 | 86.00% | 664,348 | 538,526 | 81.06% |
| **Total Charges for Services** | $ 1,539,348 | $ 1,357,573 | 88.19% | $ 1,464,348 | $ 1,598,291 | 109.15% |
| **Miscellaneous Revenue** | | | | | | |
| 361 10 Interest Earnings | $ 5,000 | $ 1,597 | 31.94% | $ 5,000 | $ 4,567 | 91.35% |
| 361 33 Other Interest Earnings | 0 | 2 | 0.00% | 0 | 20 | 0.00% |
| 362 14 Leases | 34,000 | 8,762 | 25.77% | 34,000 | 9,740 | 28.65% |
| 362 15 Tiki Lease | 180,000 | 222,814 | 123.79% | 180,000 | 233,906 | 129.95% |
| 369 31 Reimbursement of Expenditures | 0 | 42 | 0.00% | 0 | 50 | 0.00% |
| 369 70 Events | 10,000 | 0 | 0.00% | 10,000 | 0 | 0.00% |
| 369 85 Settlement of Claims | 0 | 0 | 0.00% | 0 | 275,000 | 0.00% |
| 369 90 Other Misc. Revenues | 10,000 | 3,690 | 36.90% | 10,000 | 13,561 | 135.61% |
| 369 91 Gas and Oil Sales | 950,000 | 840,315 | 88.45% | 850,000 | 1,162,724 | 136.79% |
| 369 92 Electric Utility Sales | 125,000 | 135,517 | 108.41% | 125,000 | 149,003 | 119.20% |
| 369 93 Utility Fees | 22,000 | 19,872 | 90.33% | 22,000 | 21,545 | 97.93% |
| 369 94 Soda, Candy & Ice Sales | 150,000 | 199,723 | 133.15% | 150,000 | 199,299 | 132.87% |
| 369 95 Commissions | 0 | 0 | 0.00% | 0 | 0 | 0.00% |
| 369 96 Late Payment Charges | 2,000 | 2,571 | 128.54% | 2,000 | 2,640 | 132.00% |
| 369 97 Live Aboards | 35,000 | 53,871 | 153.92% | 35,000 | 51,218 | 146.34% |
| 369 98 Other Miscellaneous Revenues | 3,800 | 11,512 | 302.95% | 3,800 | 12,427 | 327.02% |
| **Total Miscellaneous Revenue** | $ 1,526,800 | $ 1,500,288 | 98.26% | $ 1,426,800 | $ 2,135,698 | 149.68% |
| **Total Revenue** | $ 3,536,148 | $ 2,857,861 | 80.82% | $ 3,361,148 | $ 3,733,989 | 111.09% |
| Appropriated Retained Earnings | 27,122 | 0 | 0.00% | 376,154 | 0 | 0.00% |
| **TOTAL RESOURCES** | **$ 3,563,270** | **$ 2,857,861** | 80.20% | **$ 3,737,302** | **$ 3,733,989** | 99.91% |

| Fund Title: Marina | Department: Marina |
|---|---|
| Fund/Division Number: | Division: |

| | 2015/16 Adopted | 2015/16 Actual | Yr. Lapse 100% | 2016/17 Adopted | 2016/17 Actual | Yr. Lapse 100% |
|---|---|---|---|---|---|---|
| **Total Personnel Services** | $ 351,859 | $ 327,591 | 93.10% | $ 399,440 | $ 362,935 | 90.86% |
| **Total Operating Expense** | 2,714,454 | 2,637,136 | 97.15% | 2,902,537 | 3,413,608 | 117.61% |
| **Total Capital Outlay** | 498,000 | 36,445 | 7.32% | 498,000 | 14,093 | 2.83% |
| **Total Debt Service** | 451,114 | 447,337 | 99.16% | 451,115 | 212,897 | 47.19% |
| **Total Non-Operating Expenses** | 305,626 | 180,914 | 59.19% | 404,830 | 277,313 | 68.50% |
| **TOTAL APPROPRIATIONS** | **$ 4,321,053** | **$ 3,629,423** | 83.99% | **$ 4,655,922** | **$ 4,280,846** | 91.94% |

**CITY OF FORT PIERCE**

**SOLID WASTE FUND (402)**

**OPERATING STATEMENT**

**SEPTEMBER 30, 2017**

**4TH QUARTER-SEPT'16 to 4TH QUARTER-SEPT '17 COMPARISON**

| | 4TH QUARTER 9/30/2016 | 4TH QUARTER 9/30/2017 |
|---|---|---|
| ***OPERATING INCOME*** | | |
| CHARGES FOR SERVICES | $ 6,522,242 | $ 6,622,138 |
| MISCELLANEOUS | 22,090 | 39,152 |
| GRANTS | 0 | 0 |
| ***TOTAL OPERATING INCOME*** | $ 6,544,331 | $ 6,661,290 |
| ***OPERATING EXPENSES*** | | |
| PERSONAL SERVICES | $ 1,870,157 | $ 2,061,444 |
| ADMINISTRATIVE CHARGES | 251,708 | 251,600 |
| LANDFILL CHARGES | 1,481,345 | 1,897,542 |
| CONTRACTUAL | 480,000 | 549,996 |
| DEPRECIATION | 293,664 | 287,418 |
| OTHER OPERATING EXPENSES | 1,166,947 | 1,201,842 |
| ***TOTAL OPERATING EXPENSES*** | $ 5,543,821 | $ 6,249,841 |
| **NET OPERATING INCOME (LOSS)** | $ 1,000,511 | $ 411,449 |
| ***NON-OPERATING REVENUES*** | | |
| INTEREST ON INVESTMENTS | ($211) | $ 3,289 |
| TRANSFER FROM OTHER FUNDS | 0 | 0 |
| OTHER NON-OPERATING REVENUES | 0 | 15,485 |
| ***TOTAL NON-OPERATING REVENUES*** | ($211) | $ 18,774 |
| ***NON-OPERATING EXPENSES*** | | |
| OTHER NON-OPERATING EXPENSES | $ 0 | $ 0 |
| TRANSFER-OUT | 345,000 | 615,000 |
| ***TOTAL NON-OPERATING EXPENSES*** | $ 345,000 | $ 615,000 |
| **NET NON-OPERATING INCOME (LOSS)** | ($345,211) | ($596,226) |
| ***NET INCOME (LOSS)*** | $ 655,300 | ($184,777) |

| Fund Title: Solid Waste Fund | | | | Department: Solid Waste | | |
|---|---|---|---|---|---|---|
| Fund/Division Number: 402-0000 | | | | Division: | | |
| | 2015/16 Adopted | 2015/16 Actual | Yr. Lapse 100% | 2016/17 Adopted | 2016/17 Actual | Yr. Lapse 100% |
| **Charges for Services** | | | | | | |
| 343 40 Residential Service | $ 2,500,000 | $ 2,694,840 | 107.79% | $ 2,600,000 | $ 2,735,213 | 105.20% |
| 343 41 Commercial Service | 3,200,000 | 3,395,072 | 106.10% | 3,200,000 | 3,431,596 | 107.24% |
| 343 43 Commercial Trash | 85,000 | 101,291 | 119.17% | 100,000 | 101,291 | 101.29% |
| 343 44 Recycling | 300,000 | 324,315 | 108.10% | 300,000 | 330,198 | 110.07% |
| 343 45 Other Income | 2,000 | 265 | 13.24% | 1,000 | 0 | 0.00% |
| 343 46 Recycling Program | 20,000 | 6,459 | 32.29% | 18,000 | 23,840 | 132.45% |
| **Total Charges for Services** | $ 6,107,000 | $ 6,522,242 | 106.80% | $ 6,219,000 | $ 6,622,138 | 106.48% |
| **Miscellaneous Revenue** | | | | | | |
| 361 10 Interest on Investments | $ 4,000 | ( $211) | -5.27% | $ 4,000 | $ 3,289 | 82.23% |
| 361 20 Sale of Surplus | 0 | 0 | 0.00% | 0 | 0 | 0.00% |
| 364 41 Other Contirbutions/Donations | 0 | 22,008 | 0.00% | 0 | 15,485 | 0.00% |
| 369 90 Miscellaneous Revenues | 0 | 82 | 0.00% | 0 | 39,152 | 0.00% |
| **Total Miscellaneous Revenue** | $ 4,000 | $ 21,879 | 546.98% | $ 4,000 | $ 57,926 | 1448.14% |
| **Total Revenues** | $ 6,111,000 | $ 6,544,121 | 107.09% | $ 6,223,000 | $ 6,680,064 | 107.34% |
| Appropriated Retained Earnings | 191,280 | 0 | 0.00% | 367,431 | 0 | 0.00% |
| **TOTAL RESOURCES** | **$ 6,302,280** | **$ 6,544,121** | 103.84% | **$ 6,590,431** | **$ 6,680,064** | 101.36% |

| Fund Title: | Solid Waste Fund | Department: | Solid Waste |
|---|---|---|---|
| Fund/Division Number: | 402-4200-534 | Division: | |

| | 2015/16 Adopted | 2015/16 Actual | Yr. Lapse 100% | 2016/17 Adopted | 2016/17 Actual | Yr. Lapse 100% |
|---|---|---|---|---|---|---|
| **Total Personnel Services** | $ 2,017,627 | $ 1,870,157 | 92.69% | $ 2,040,266 | $ 2,061,444 | 101.04% |
| **Total Operating Expense** | 3,084,653 | 3,673,664 | 119.09% | 3,585,165 | 4,188,397 | 116.83% |
| **Total Capital Outlay** | 350,000 | 195,784 | 55.94% | 450,000 | 211,603 | 47.02% |
| **Total Non-Operating Expense** | 1,200,000 | 345,000 | 28.75% | 800,000 | 615,000 | 76.88% |
| **TOTAL APPROPRIATIONS** | **$ 6,652,280** | **$ 6,084,605** | 91.47% | **$ 6,875,431** | **$ 7,076,444** | 102.92% |

**CITY OF FORT PIERCE**

**GOLF COURSE (405)**

**OPERATING STATEMENT**

**SEPTEMBER 30, 2017**

**4TH QUARTER-SEPT '16 to 4TH QUARTER-SEPT '17 COMPARISON**

| | 4TH QUARTER 9/30/2016 | 4TH QUARTER 9/30/2017 |
|---|---|---|
| ***OPERATING INCOME*** | | |
| CHARGES FOR SERVICES | $ 1,124,495 | $ 898,625 |
| MISCELLANEOUS | 111,374 | 81,080 |
| GRANTS | 0 | 0 |
| ***TOTAL OPERATING INCOME*** | $ 1,235,869 | $ 979,705 |
| ***OPERATING EXPENSES*** | | |
| PERSONAL SERVICES | $ 564,532 | $ 573,404 |
| ADMINISTRATIVE CHARGES | 57,538 | 56,480 |
| CONTRACTUAL FEES | 108,822 | 168,653 |
| UTILITIES | 57,158 | 56,488 |
| COST OF GOODS SOLD | 79,514 | 52,313 |
| DEPRECIATION | 135,666 | 136,142 |
| OTHER OPERATING EXPENSES | 469,444 | 449,715 |
| ***TOTAL OPERATING EXPENSES*** | $ 1,472,674 | $ 1,493,195 |
| **NET OPERATING INCOME (LOSS)** | ($236,806) | ($513,490) |
| ***NON-OPERATING REVENUES*** | | |
| INTEREST ON INVESTMENTS | $ 189 | $ 244 |
| TRANSFER FROM OTHER FUNDS | 173,800 | 170,000 |
| OTHER NON-OPERATING REVENUES | 0 | 0 |
| ***TOTAL NON-OPERATING REVENUES*** | $ 173,989 | $ 170,244 |
| ***NON-OPERATING EXPENSES*** | | |
| OTHER NON-OPERATING EXPENSES | $ 58 | $ 0 |
| TRANSFER-OUT | 28,000 | 7,000 |
| ***TOTAL NON-OPERATING EXPENSES*** | $ 28,058 | $ 7,000 |
| **NET NON-OPERATING INCOME (LOSS)** | $ 145,931 | $ 163,244 |
| ***NET INCOME (LOSS)*** | ($90,874) | ($350,245) |

| Fund Title: | Golf Course Fund | Department: | Golf Course |
|---|---|---|---|
| Fund/Division Number: | 405 0000 | Division: | |

| | | 2015/16 Adopted | 2015/16 Actual | Yr. Lapse 100% | 2016/17 Adopted | 2016/17 Actual | Yr. Lapse 100% |
|---|---|---|---|---|---|---|---|
| **Charges for Services** | | | | | | | |
| 347 20 | Membership Dues | $ 2,500 | $ 2,510 | 100.40% | $ 2,500 | $ 2,510 | 100.40% |
| 347 22 | Other Memberships | 40,000 | 27,238 | 68.09% | 30,000 | 20,299 | 67.66% |
| 347 24 | Golf Fees | 1,245,000 | 1,070,096 | 85.95% | 1,192,000 | 860,213 | 72.17% |
| 347 25 | Driving Range | 40,000 | 24,652 | 61.63% | 35,000 | 15,603 | 44.58% |
| | **Total Charges for Services** | $ 1,327,500 | $ 1,124,495 | 84.71% | $ 1,259,500 | $ 898,625 | 71.35% |
| **Miscellaneous Revenue** | | | | | | | |
| 361 10 | Interest Earnings | $ 250 | $ 189 | 75.60% | $ 250 | $ 244 | 97.77% |
| 369 25 | Pro Shop Merchandise | 42,000 | 39,740 | 94.62% | 42,000 | 25,500 | 60.71% |
| 369 80 | Food | 22,000 | 18,582 | 84.46% | 24,000 | 10,494 | 43.73% |
| 369 89 | Packaged Sales | 36,500 | 30,336 | 83.11% | 36,500 | 24,930 | 68.30% |
| 369 90 | Misc Revenues | 5,000 | 5,564 | 111.28% | 5,000 | 6,917 | 138.34% |
| 369 94 | Snacks & Beverages | 25,000 | 17,151 | 68.60% | 20,000 | 12,478 | 62.39% |
| 369 98 | Other Misc Revenues | 0 | 0 | 0.00% | 0 | 516 | 0.00% |
| | **Total Miscellaneous Revenue** | $ 130,750 | $ 111,563 | 85.33% | $ 127,750 | $ 81,080 | 63.47% |
| **Transfers** | | | | | | | |
| 381 01 | Transfer from General Fund | $ 0 | $173,800 | 0.00% | $ 0 | $170,000 | 0.00% |
| 382 50 | Transfer from Solid Waste | 0 | 0 | 0.00% | 0 | 0 | 0.00% |
| | **Total Transfers** | $0 | $173,800 | 0.00% | $0 | $170,000 | 0.00% |
| | **Total Revenues** | $ 1,458,250 | $ 1,409,858 | 96.68% | $ 1,387,250 | $ 1,149,705 | 82.88% |
| | Appropriated Retained Earnings | 0 | 0 | 0.00% | 0 | 0 | 0.00% |
| | **TOTAL RESOURCES** | **$ 1,458,250** | **$ 1,409,858** | 96.68% | **$ 1,387,250** | **$ 1,149,705** | 82.88% |

| Fund Title: | Golf Course Fund | Department: | Golf Course |
|---|---|---|---|
| Fund/Division Number: | 405-4500-572 | Division: | |

| | 2015/16 Adopted | 2015/16 Actual | Yr. Lapse 100% | 2016/17 Adopted | 2016/17 Actual | Yr. Lapse 100% |
|---|---|---|---|---|---|---|
| **Total Personnel Services** | $ 633,868 | $ 564,532 | 89.06% | $ 599,455 | $ 573,404 | 95.65% |
| **Total Operating Expense** | 925,055 | 908,142 | 98.17% | 883,883 | 912,791 | 103.27% |
| **Total Capital Outlay** | 7,000 | 19,324 | 276.06% | 6,000 | 4,300 | 71.67% |
| **Total Non-Operating Expense** | 32,641 | 28,058 | 85.96% | 32,641 | 7,000 | 21.45% |
| **TOTAL APPROPRIATIONS** | **$ 1,598,564** | **$ 1,520,057** | 95.09% | **$ 1,521,979** | **$ 1,497,495** | 98.39% |

**CITY OF FORT PIERCE**

**SUNRISE THEATRE (406)**

**OPERATING STATEMENT**

**SEPTEMBER 30, 2017**

**4TH QUARTER-SEPT '16 to 4TH QUARTER-SEPT '17 COMPARISON**

| | 4TH QUARTER 9/30/2016 | 4TH QUARTER 9/30/2017 |
|---|---|---|
| ***OPERATING INCOME*** | | |
| CHARGES FOR SERVICES | $ 2,888,806 | $ 2,392,734 |
| MISCELLANEOUS | 442,992 | 357,421 |
| GRANTS | 68,942 | 0 |
| ***TOTAL OPERATING INCOME*** | $ 3,400,740 | $ 2,750,155 |
| ***OPERATING EXPENSES*** | | |
| PERSONAL SERVICES | $ 463,904 | $ 551,905 |
| ADMINISTRATIVE CHARGES | 114,090 | 97,091 |
| CONTRACTUAL FEES | 536,459 | 406,554 |
| UTILITIES | 144,476 | 141,619 |
| COST OF EVENTS | 1,799,899 | 1,692,390 |
| ADVERTISING | 418,024 | 392,433 |
| DEPRECIATION | 535,707 | 535,708 |
| OTHER OPERATING EXPENSES | 530,637 | 471,773 |
| ***TOTAL OPERATING EXPENSES*** | $ 4,543,198 | $ 4,289,472 |
| **NET OPERATING INCOME (LOSS)** | ($1,142,458) | ($1,539,317) |
| ***NON-OPERATING REVENUES*** | | |
| INTEREST ON INVESTMENTS | $ 1,046 | $ 428 |
| OTHER NON-OPERATING REVENUES | 0 | 0 |
| TRANSFER FROM OTHER FUNDS | 450,000 | 702,825 |
| ***TOTAL NON-OPERATING REVENUES*** | $ 451,046 | $ 703,253 |
| ***NON-OPERATING EXPENSES*** | | |
| DEBT SERVICE | $ 0 | $ 0 |
| OTHER NON-OPERATING EXPENSES | 0 | 0 |
| TRANSFER-OUT | 0 | 0 |
| ***TOTAL NON-OPERATING EXPENSES*** | $ 0 | $ 0 |
| **NET NON-OPERATING INCOME (LOSS)** | $ 451,046 | $ 703,253 |
| ***NET INCOME (LOSS)*** | ($691,412) | ($836,064) |

| Fund Title: | Sunrise Theatre Fund | Department: | Sunrise Theatre |
|---|---|---|---|
| Fund/Division Number: | 406 0000 | Division: | |

| | 2015/16 Adopted | 2015/16 Actual | Yr. Lapse 100% | 2016/17 Adopted | 2016/17 Actual | Yr. Lapse 100% |
|---|---|---|---|---|---|---|
| **Charges for Services** | | | | | | |
| 347 56 10 Ticket Sales | $ 2,650,000 | $ 2,374,315 | 89.60% | $ 3,100,000 | $ 1,774,558 | 57.24% |
| 347 56 11 Ticket Sales - Rentals | 200,000 | 157,513 | 78.76% | 200,000 | 348,729 | 174.36% |
| 347 56 15 Ticket Handling Fees | 95,000 | 124,266 | 130.81% | 120,000 | 98,323 | 81.94% |
| 347 56 50 Sponsorship Fees | 35,000 | 17,500 | 50.00% | 20,000 | 25,075 | 125.38% |
| 347 56 80 Memberships | 130,000 | 183,876 | 141.44% | 185,000 | 131,420 | 71.04% |
| 347 56 90 Donations & Pledges | 15,000 | 31,337 | 208.91% | 15,000 | 14,630 | 97.53% |
| **Total Charges for Services** | $ 3,125,000 | $ 2,888,806 | 92.44% | $ 3,640,000 | $ 2,392,734 | 65.73% |
| **Grants** | | | | | | |
| 347 70 10 DCF/State Grant | $ 0 | $ 68,942 | 0.00% | $ 0 | $ 0 | 0.00% |
| **Total Grants** | $ 0 | $ 68,942 | 0.00% | $ 0 | $ 0 | 0.00% |
| **Miscellaneous Revenue** | | | | | | |
| 361 10 00 Interest Earning | $ 600 | $ 1,046 | 174.28% | $ 600 | $ 428 | 71.37% |
| 362 14 00 Rents and Royalties | 48,000 | 26,650 | 55.52% | 45,000 | 61,687 | 137.08% |
| 369 31 00 Reimb. of Expenditures | 70,000 | 249,972 | 0.00% | 180,000 | 121,334 | 0.00% |
| 369 70 00 Events | 22,500 | 10,754 | 47.80% | 25,000 | 28,081 | 112.32% |
| 369 89 00 Packaged Sales | 140,000 | 148,774 | 106.27% | 140,000 | 138,096 | 98.64% |
| 369 90 00 Miscellaneous Revenues | 10,000 | 361 | 3.61% | 5,200 | 3,298 | 63.42% |
| 369 95 00 Commission/Tips/Merch. | 6,500 | 6,481 | 99.71% | 6,500 | 4,925 | 75.77% |
| 369 96 00 Late Payment Charges | 0 | 0 | 0.00% | 0 | 0 | 0.00% |
| 369 97 00 Capital Improvement Fee | 0 | 0 | 0.00% | 180,000 | 132,916 | 73.84% |
| **Total Miscellaneous Revenues** | $ 297,600 | $ 444,037 | 149.21% | $ 582,300 | $ 490,765 | 84.28% |
| **Other Resources** | | | | | | |
| 381 01 00 Transfer from General | $ 0 | $ 0 | 0.00% | $ 0 | $ 156,000 | 0.00% |
| 381 89 00 Transfer from Restricted Fund | 0 | 0 | 0.00% | 0 | 96,825 | 0.00% |
| 381 91 00 Transfer from FPRA | 450,000 | 450,000 | 100.00% | 450,000 | 450,000 | 100.00% |
| **Total Other Resources** | $ 450,000 | $ 450,000 | 100.00% | $ 450,000 | $ 702,825 | 156.18% |
| **TOTAL RESOURCES** | **$ 3,872,600** | **$ 3,851,786** | 99.46% | **$ 4,672,300** | **$ 3,586,324** | 76.76% |

| Fund Title: | Sunrise Theatre Fund | Department: | Sunrise Theatre |
|---|---|---|---|
| Fund/Division Number: | 406-4600-575 | Division: | |

| | 2015/16 Adopted | 2015/16 Actual | Yr. Lapse 100% | 2016/17 Adopted | 2016/17 Actual | Yr. Lapse 100% |
|---|---|---|---|---|---|---|
| **Total Personnel Services** | $ 586,481 | $ 463,904 | 79.10% | $ 578,243 | $ 551,905 | 95.45% |
| **Total Operating Expense** | 3,823,297 | 4,079,294 | 106.70% | 4,441,620 | 3,737,567 | 84.15% |
| **Total Capital Outlay** | 1,000 | 0 | 0.00% | 187,437 | 97,030 | 51.77% |
| **Total Transfers** | 0 | 0 | 0.00% | 0 | 0 | 0.00% |
| **TOTAL APPROPRIATIONS** | **$ 4,410,778** | **$ 4,543,198** | 103.00% | **$ 5,207,300** | **$ 4,386,502** | 84.24% |

**CITY OF FORT PIERCE**
**BUILDING & CODE (420)**
**OPERATING STATEMENT**
**SEPTEMBER 30, 2017**
**4TH QUARTER-SEPT '16 to 4TH QUARTER-SEPT '17 COMPARISON**

| | 4TH QUARTER 9/30/2016 | 4TH QUARTER 9/30/2017 |
|---|---|---|
| ***OPERATING INCOME*** | | |
| LICENSE and PERMIT | $ 1,306,944 | $ 1,304,133 |
| CHARGES FOR SERVICES | 21,243 | 29,371 |
| FINES & FORFEITS | 2,100 | 3,000 |
| MISCELLANEOUS | 30,129 | 32,661 |
| ***TOTAL OPERATING INCOME*** | $ 1,360,415 | $ 1,369,165 |
| ***OPERATING EXPENSES*** | | |
| PERSONAL SERVICES | $ 671,448 | $ 676,917 |
| ADMINISTRATIVE CHARGES | 91,260 | 125,705 |
| CONTRACTUAL FEES | 269,170 | 222,976 |
| DEPRECIATION | 0 | 0 |
| OTHER OPERATING EXPENSES | 118,087 | 197,600 |
| ***TOTAL OPERATING EXPENSES*** | $ 1,149,965 | $ 1,223,198 |
| **NET OPERATING INCOME (LOSS)** | $ 210,450 | $ 145,967 |
| ***NON-OPERATING REVENUES*** | | |
| INTEREST ON INVESTMENTS | $ 2,657 | $ 6,060 |
| TRANSFER FROM OTHER FUNDS | 0 | 0 |
| OTHER NON-OPERATING REVENUES | 0 | 0 |
| ***TOTAL NON-OPERATING REVENUES*** | $ 2,657 | $ 6,060 |
| ***NON-OPERATING EXPENSES*** | | |
| DEBT SERVICE | $ 0 | $ 0 |
| OTHER NON-OPERATING EXPENSES | 0 | 0 |
| TRANSFER-OUT | 0 | 0 |
| ***TOTAL NON-OPERATING EXPENSES*** | $ 0 | $ 0 |
| **NET NON-OPERATING INCOME (LOSS)** | $ 2,657 | $ 6,060 |
| ***NET INCOME (LOSS)*** | $ 213,107 | $ 152,027 |

| Fund Title: | Building & Code | Department: | Building Inspection |
|---|---|---|---|
| Fund/Division Number: | 420-2902-524 | Division: | |

| | 2015/16 Adopted | 2015/16 Actual | Yr. Lapse 100% | 2016/17 Adopted | 2016/17 Actual | Yr. Lapse 100% |
|---|---|---|---|---|---|---|
| **Licenses and Permits** | | | | | | |
| 322 10 Permits-Building Dept. | $ 685,000 | $ 766,851 | 111.95% | $ 785,000 | $ 725,969 | 92.48% |
| 322 20 Inspections | 15,000 | 12,630 | 84.20% | 15,000 | 11,289 | 75.26% |
| 322 90 Other Permit Fees | 425,000 | 475,643 | 111.92% | 500,000 | 516,605 | 103.32% |
| 329 40 Contractor's License | 55,000 | 51,820 | 94.22% | 55,000 | 50,270 | 91.40% |
| **Total Licenses and Permits** | $ 1,180,000 | $ 1,306,944 | 110.76% | $ 1,355,000 | $ 1,304,133 | 96.25% |
| **Charge for Services** | | | | | | |
| 341 40 Cert.,Copying, Rcd. Search | $ 2,000 | $ 216 | 10.81% | $ 2,000 | $ 107 | 5.34% |
| 341 60 Administration Fees | 0 | 0 | 0.00% | 0 | 2,925 | 0.00% |
| 341 61 Demo & Flood Plain Mgmnt | 20,000 | 0 | 0.00% | 0 | 0 | 0.00% |
| 341 94 Credti Card Process Fees | 15,000 | 21,026 | 140.18% | 20,000 | 26,340 | 131.70% |
| **Total Charges for Service** | $ 37,000 | $ 21,243 | 57.41% | $ 22,000 | $ 29,371 | 133.51% |
| **Fines & Forfeits** | | | | | | |
| 354 60 Unlicensed Contracting | $ 3,000 | $ 2,100 | 0.00% | $ 3,000 | $ 3,000 | 100.00% |
| **Total Fines & Forfeits** | $ 3,000 | $ 2,100 | 70.00% | $ 3,000 | $ 3,000 | 100.00% |
| **Miscellaneous Revenue** | | | | | | |
| 361 10 Interest on Investments | $ 0 | $ 2,657 | 0.00% | $ 0 | $ 6,060 | 0.00% |
| 369 00 Miscellaneous Revenues | 24,000 | 30,129 | 125.54% | 16,000 | 32,661 | 204.13% |
| **Total Miscellaneous Revenues** | $ 24,000 | $ 32,786 | 136.61% | $ 16,000 | $ 38,721 | 242.00% |
| Appropriated Retained Earnings | (14,679) | $ 0 | 0.00% | (8,852) | $ 0 | 0.00% |
| **TOTAL RESOURCES** | **$ 1,229,321** | **$ 1,363,072** | **110.88%** | **$ 1,387,148** | **$ 1,375,225** | **99.14%** |

| Fund Title: | Building & Code | Department: | Building Inspection |
|---|---|---|---|
| Fund/Division Number: | 420-2902-524 | Division: | |

| | 2015/16 Adopted | 2015/16 Actual | Yr. Lapse 100% | 2016/17 Adopted | 2016/17 Actual | Yr. Lapse 100% |
|---|---|---|---|---|---|---|
| **Total Personnel Services** | $ 716,730 | $ 671,448 | 93.68% | $ 905,915 | $ 676,917 | 74.72% |
| **Total Operating Expense** | 444,766 | 478,517 | 107.59% | 438,700 | 546,281 | 124.52% |
| **Total Capital Outlay** | 70,000 | 2,921 | 0.00% | 42,533 | 35,538 | 0.00% |
| **Total Transfers** | 0 | 0 | 0.00% | 0 | 0 | 0.00% |
| **TOTAL APPROPRIATIONS** | **$ 1,231,496** | **$ 1,152,886** | 93.62% | **$ 1,387,148** | **$ 1,258,736** | 90.74% |

**FORT PIERCE REDEVELOPMENT FUND**
**OPERATING FUND**
**4TH Quarter Report**
**September 30, 2017**

**CASH AND INVESTMENT REPORT**

| | |
|---|---|
| October 1, Estimated Beg. Available Resources | 281,884 |
| Revenues | 7,349,601 |
| Available Resources | 7,631,485 |
| Expenditures | 7,257,506 |
| **Current Available Resources** | **373,979** |

| FPRA Operating Resources and Uses | Budget | Budget Adjust. | Revised Budget | Expended | Balance |
|---|---|---|---|---|---|
| Current Resousces Available for Operating | | | | | **373,979** |
| Plus Unrealized Revenue: | | | | | |
| 303 Leases | | | | | 0 |
| 305 Transfer From General | | | | | 0 |
| **Total Unrealized Revenue** | | | | | **0** |
| **Estimated Resources Available For Operating** | | | | | **373,979** |
| Less Outstanding Expenditures: | | | | | |
| 501 Personnel Services | 0 | 0 | 0 | 0 | 0 |
| 502 Operating Expenditures | 321,914 | 0 | 321,914 | 365,423 | (43,509) |
| 503 Capital Outlay | 0 | 0 | 0 | 839,079 | (839,079) |
| 504 Total Grants-Private Organ. | 20,000 | 0 | 20,000 | 22,395 | (2,395) |
| 505 Transfers | 5,126,741 | 0 | 5,126,741 | 5,140,390 | (13,649) |
| 506 Sunrise Theatre | 450,000 | 0 | 450,000 | 450,000 | 0 |
| **Categories Balances** | 5,918,655 | 0 | 5,918,655 | 6,817,287 | **(898,632)** |
| **Projected Resources Over (Short)** | | | | | **(524,653)** |

**FORT PIERCE REDEVELOPMENT FUND**
**OPERATING FUND**
**4TH Quarter Report**
**September 30, 2017**

**TRANSFERS FROM GENERAL**

| | | |
|---|---|---|
| Fiscal Year: | | |
| | 2011 | 1,319,504 |
| | 2012 | 1,129,036 |
| | 2013 | 1,410,793 |
| | 2014 | 1,689,274 |
| | 2015 | 1,470,701 |
| | 2016 | 1,676,422 |
| | 2017 | 737,543 |
| Total Transfers | | 9,433,273 |
| Plus | | |
| Additions: | | |
| Land Purchase for Beach Parking | | 829,389 |
| Less: | | |
| Reductions: | | |
| Seaway Drive Roundabout (Days Inn Sight) | | 1,488,000 |
| **Total Due General Fund** | | **8,774,662** |

**City of Fort Pierce**
**Financial Position/Resources and Uses**
**SEPTEMBER 30, 2017**
**4TH Quarter Fiscal 2017**

| | 001 General | 401 Marina | 402 Solid Waste | 405 Golf Course | 406 Sunrise Theatre | 420 Building Code |
|---|---|---|---|---|---|---|
| **Estimated Avail. Resources Sept. 30, 2016** | **4,852,321** | **288,946** | **1,059,813** | **(80,725)** | **(154,392)** | **677,253** |
| **Less:** | | | | | | |
| **10% Budget Reserve** | (3,580,312) | | | | | |
| **2017 Budget Appropriation** | (710,407) | (376,154) | (367,431) | 0 | 0 | 8,852 |
| **10/01/2016 Unrestricted Resources** | **561,602** | **(87,208)** | **692,382** | **(80,725)** | **(154,392)** | **686,105** |
| **4th Quarter Revenues** | 41,236,409 | 3,733,989 | 6,680,064 | 1,149,705 | 3,586,324 | 1,375,225 |
| **2017 Budget Appropriation** | 710,407 | 376,154 | 367,431 | 0 | 0 | (8,852) |
| **2018 Budget Appropriation** | (600,000) | 0 | 0 | 0 | 0 | 0 |
| **10/01/16 thru 9/30/17 Resources** | 41,346,816 | 4,110,143 | 7,047,495 | 1,149,705 | 3,586,324 | 1,366,373 |
| **4th Quarter Expenses** | 39,492,213 | 4,280,846 | 7,076,444 | 1,497,495 | 4,386,502 | 1,258,736 |
| **Less Accum. Depreciation** | 0 | (1,118,532) | (287,418) | (136,142) | (535,708) | 0 |
| **Total Uses** | 39,492,213 | 3,162,314 | 6,789,026 | 1,361,353 | 3,850,795 | 1,258,736 |
| **FY 2017 Net Resources** | **1,854,603** | **947,828** | **258,469** | **(211,648)** | **(264,470)** | **107,637** |
| **Total Resources Available** | **2,416,205** | **860,620** | **950,851** | **(292,373)** | **(418,862)** | **793,742** |

**City of Fort Pierce**
**Urban Redevelopment**
**Financial Position/Resources and Uses**
**SEPTEMBER 30, 2017**
**4TH Quarter Fiscal 2017**
*******

| | 104 CRA | 103 CDBG | 105 SHIP | 106 Grant HHR | 100 Restrict Rev Fund | 102 Law Enforce Trust | 301 Cap Proj Heathcote |
|---|---|---|---|---|---|---|---|
| **Estimated Avail. Resource Sept. 30, 2016** | **281,884** | **811,299** | **258,061** | **907,853** | **2,298,586** | **83,661** | **2,326,803** |
| **Less:** | | | | | | | |
| **Reserve** | | | | | | | |
| **Budget Appropriation** | | | | | | | |
| **10/01/2016 Restricted (***) and Unrestricted Resources** | **281,884** | **811,299** | **258,061** | **907,853** | **2,298,586** | **83,661** | **2,326,803** |
| **4TH Quarter Revenues** | 7,349,601 | 548,089 | 280,696 | 93,149 | 1,949,861 | 563 | 17,161 |
| **10/01/16 thru 9/30/17 Resources** | 7,349,601 | 548,089 | 280,696 | 93,149 | 1,949,861 | 563 | 17,161 |
| **4TH Quarter Expenses** | 7,257,506 | 625,471 | 90,980 | 10,778 | 581,714 | 18,016 | 2,343,964 |
| **Total Uses** | 7,257,506 | 625,471 | 90,980 | 10,778 | 581,714 | 18,016 | 2,343,964 |
| **FY 2017 Net Resources** | **92,095** | **(77,382)** | **189,716** | **82,371** | **1,368,147** | **(17,453)** | **(2,326,803)** |
| **Total Resources Available** | **373,979** | **733,916** | **447,777** | **990,224** | **3,666,733** | **66,208** | **0** |

**City Commission Regular Meeting** **11.a.**

**Meeting Date:** 01/02/2018

**Re:** Approval of a Site Plan Extension for Mayfair at Lawnwood Planned Development

**Submitted For:** Rebecca Grohall, Director, Planning & Zoning

---

**SUBJECT:**

Approval of an extension for the Planned Development (PD) Approval for the project known as Mayfair at Lawnwood, located at 1801 Nebraska Avenue. This project was originally approved on November 21st, 2017. The new date for the site plan expiration would become May 21st, 2017.

**SUMMARY:**

- The Applicant's Representative, Jay Steinman of Duane Morris LLP, is requesting an extension based upon ~ the Governor's Executive Order Number 17-235. This Executive Order addresses declared disasters by giving applicants additional extensions of time for applicants who request the extension.
- Florida Statute 252.364 sets forth the extension of expiration date for emergency orders.
- The Applicant's Representative is requesting extension for Executive Order 17-235 signed by Governor Rick Scott.
- This project was initially approved on April 4, 2016 with a two year approval to commence, this approval would expire on April 4, 2018. However, the Governor's Executive Orders now extend the expiration to April 7, 2020.
- The applicant remains engaged in discussions with the Villages of Longwood Association Counsel, David Ross, Esq., in an effort to finalize an inter-party agreement as conditioned by the Commission's approval.

**RECOMMENDATION:**

Approve the extensions based on the State of Florida Executive Orders issued by Governor Rick Scott.

**ALTERNATIVES:**

Staff will proceed as directed by the City Commission.

**RESPONSIBLE STAFF:**

Kori Benton, Senior Planner

**COORDINATED WITH:**

Rebecca Grohall, AICP, Planning Director

---

**Fiscal Impact**

**Budgeted Y/N:** N

**Fiscal Year:** 2018

**OTHER INFORMATION:**

This project encompasses the development of 218 residential units,whereas extension of the site plan assists in its future development and the associated increase in ad-valorem tax revenue from its completion.

## Attachments

Extension Request Letter

Approved Site Plan (Retention Pond on Southern Parcel)

CC Approval Letter

Site Aerial & Zoning Map

## Form Review

| Inbox | Reviewed By | Date |
|---|---|---|
| City Manager | Nick Mimms | 12/22/2017 09:01 AM |

Form Started By: Kori Benton

Started On: 12/20/2017 09:12 AM

Final Approval Date: 12/22/2017

DuaneMorris
www.duanemorris.com

12/12/2017

Dear Mr. Benton:

As you know, our office represents Mayfair at Lawnwood REPH LLC, in connection with an application for Development Order, and that certain contemplated Agreement for Development Order between Mayfair at Lawnwood REPH LLC and Longwood of Ft. Pierce Homeowners Association, Inc.

Mayfair at Lawnwood REPH LLC is the fee owner of parcels assessed under Property Account Nos. 2416-504-0199-200/3; 2416-504-0199-000/1 and 2416-504-0199-050/6.

As of November 21, 2017, the City Commission approval of the application for Development Order expired. However, as you are away from Jay Steinman's e-mail of last week, our client and the Association continue to work diligently toward the completion of an Agreement between them in this regard. It is hoped that the association and our client will be in a position to finalize the agreement within 30 days.

Accordingly, and pursuant to the State of Florida Office of the Governor Executive Order Number 17-235, we hereby request, on behalf of the parties, an extension of the Development Order approval for a period of up to six (6) months from the date of expiration of the Development Order approval.

Thank you for your anticipated favorable response to this request.

Regards,
Virginia C. Pecknold
Paralegal

DuaneMorris
www.duanemorris.com
**Virginia C. Pecknold**
Paralegal
Duane Morris LLP
200 South Biscayne Boulevard, Suite 3400
Miami, FL 33131-2318
E-MAIL

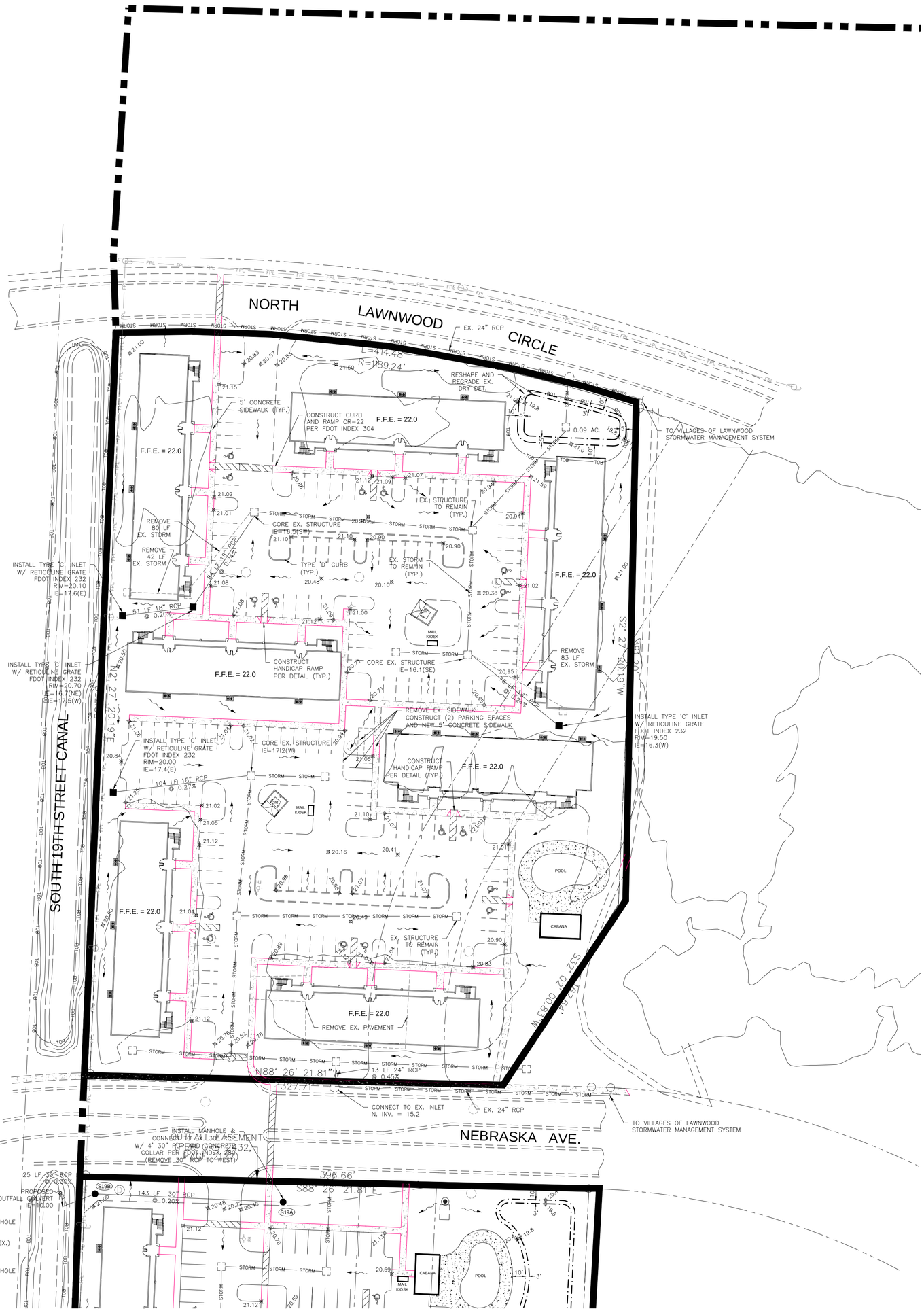


GRAPHIC SCALE

( IN FEET )
1 inch = 50 ft.

50 0 25 50 100

N E S W NE SE SW NW

| | | | |
|---|---|---|---|
| IBI GROUP FLORIDA ENGINEERING BUSINESS NO. 2966 | SCALE: 1" = 50' | DRAWN: BW | MAYFAIR<br>FORT PIERCE, FLORIDA |
| | PROJECT: 38890 | DESIGNED: | |
| | SHEET: PGD-ALT | CHECKED: RW | PAVING, GRADING AND DRAINAGE PLAN |
| | | DATE: 11/16/2016 | |

**IBI GROUP (FLORIDA) INC.**
HTTP://WWW.IBIGROUP.COM
ENGINEERS SURVEYORS PLANNERS
LANDSCAPE ARCHITECTS ENVIRONMENTAL CONSULTANTS

2300 MAITLAND CENTER PARKWAY
SUITE 101
MAITLAND, FLORIDA, 32751
(407) 660-2120
ORLANDO

2200 PARK CENTRAL BLVD. N.
SUITE 100
POMPANO BEACH, FLORIDA, 33064
(954) 974-2200
POMPANO BEACH

| REV. | DATE | DESCRIPTION | BY |
|---|---|---|---|
| 1 | | | |
| 2 | | | |
| 3 | | | |
| 4 | | | |
| 5 | | | |
| 6 | | | |
| 7 | | | |
| 8 | | | |
| 9 | | | |

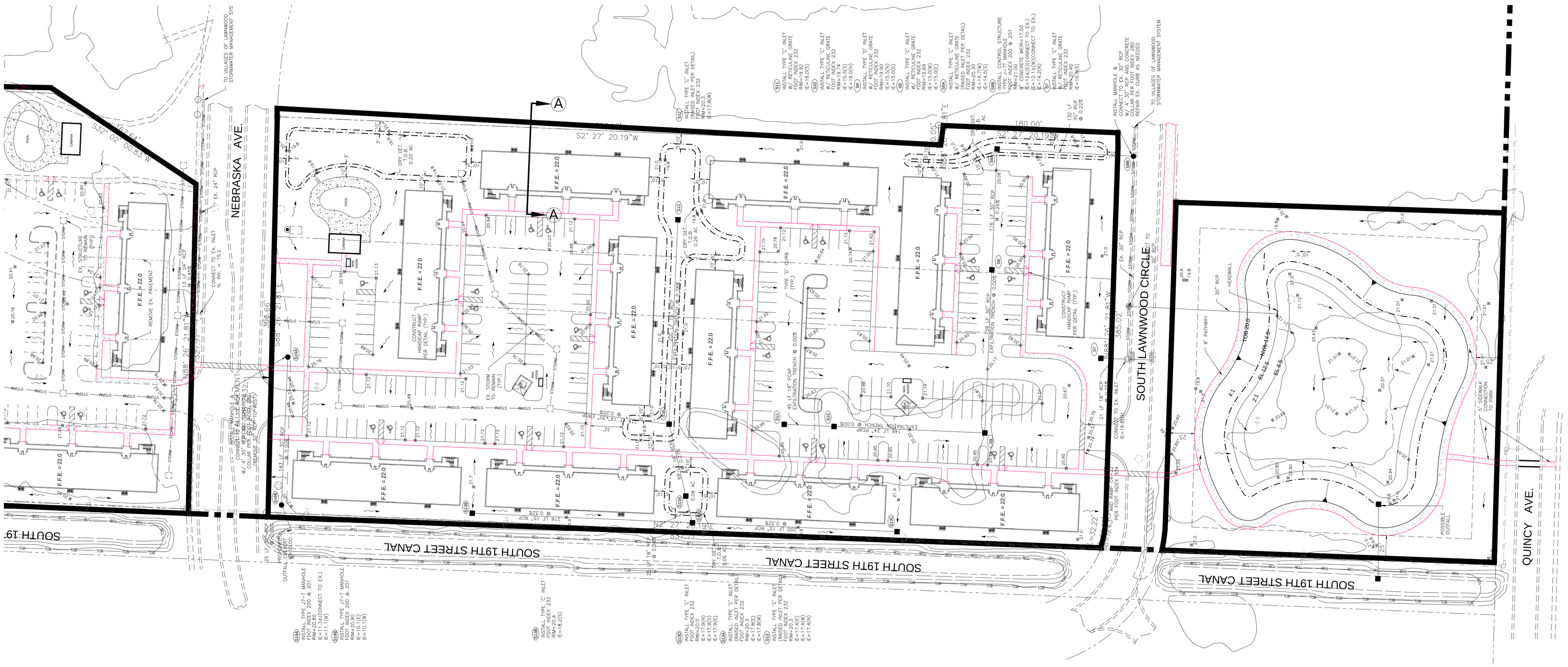


GRAPHIC SCALE

( IN FEET )
1 inch = 50 ft.

945 LF - 8' PATHWAY
2,080 SY - POND BANK SOD
5,815 SY - PARK SOD

AREA @ T.O.B. = 1.27 AC
AREA @ N.W.L. = 0.84 AC

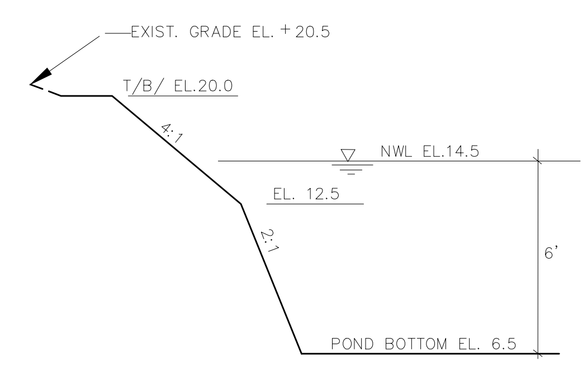


TYPICAL POND SECTION

NOTE: SOD SIDESLOPES TO EL. 14.5

| REV. | DATE | DESCRIPTION | BY |
|---|---|---|---|
| 1 | | | |
| 2 | | | |
| 3 | | | |
| 4 | | | |
| 5 | | | |
| 6 | | | |
| 7 | | | |
| 8 | | | |


**IBI GROUP (FLORIDA) INC.**
HTTP://WWW.IBIGROUP.COM
ENGINEERS SURVEYORS PLANNERS
LANDSCAPE ARCHITECTS ENVIRONMENTAL CONSULTANTS
2300 MAITLAND CENTER PARKWAY SUITE 101 MAITLAND, FLORIDA 32751 (407) 660-1287
2200 PARK CENTRAL BLVD. N. SUITE 100 POMPANO BEACH, FLORIDA 33064 (954) 788-1400
ORLANDO POMPANO BEACH


# MAYFAIR
## FORT PIERCE, FLORIDA
## PAVING, GRADING AND DRAINAGE PLAN

| | | | |
|---|---|---|---|
| SCALE 1" = 50' | DRAWN: BW | DESIGNED: | CHECKED: RW |
| PROJECT 38890 | SHEET PGD-ALT | DATE: 11/16/2016 | |

IBI GROUP
FLORIDA ENGINEERING BUSINESS NO. 2966

NOT FOR CONSTRUCTION
11/16/16

J:\38890\5.9 Drawings\59civil\layouts\38890-PGD ALT 2.dwg Modified:11/16/2016 By:becky.williams Plotted By:becky.williams

THE SUNRISE CITY
FORT PIERCE
CITY CLERK'S OFFICE
Florida

November 29, 2016

NOV 29 2016

Richard Wohlfarth, PE - Associate Director
IBI Group (Florida) Inc.
2300 Maitland Center Parkway-Suite 101
Maitland FL 32751-7410

Dear Mr. Wohlfarth:

At their meeting on Monday, November 21, 2016, the City Commission of the City of Fort Pierce, Florida, approved your request for a Planned Development (PD) Plan generally located at 1801 Nebraska Avenue conditioned on the incorporation of the agreement between the applicant and adjacent properties' HOA being reduced to writing and incorporated into the development order.

If you have any questions, please feel free to contact me or the City Planning Department.

Very truly yours,

Linda W. Cox

Linda W. Cox
City Clerk

cc: Rebecca Grohall, Planning Manager

Mayfair At Lawnwood Reph LLC
780 NW 42nd Ave Ste 300
Miami, FL 33126

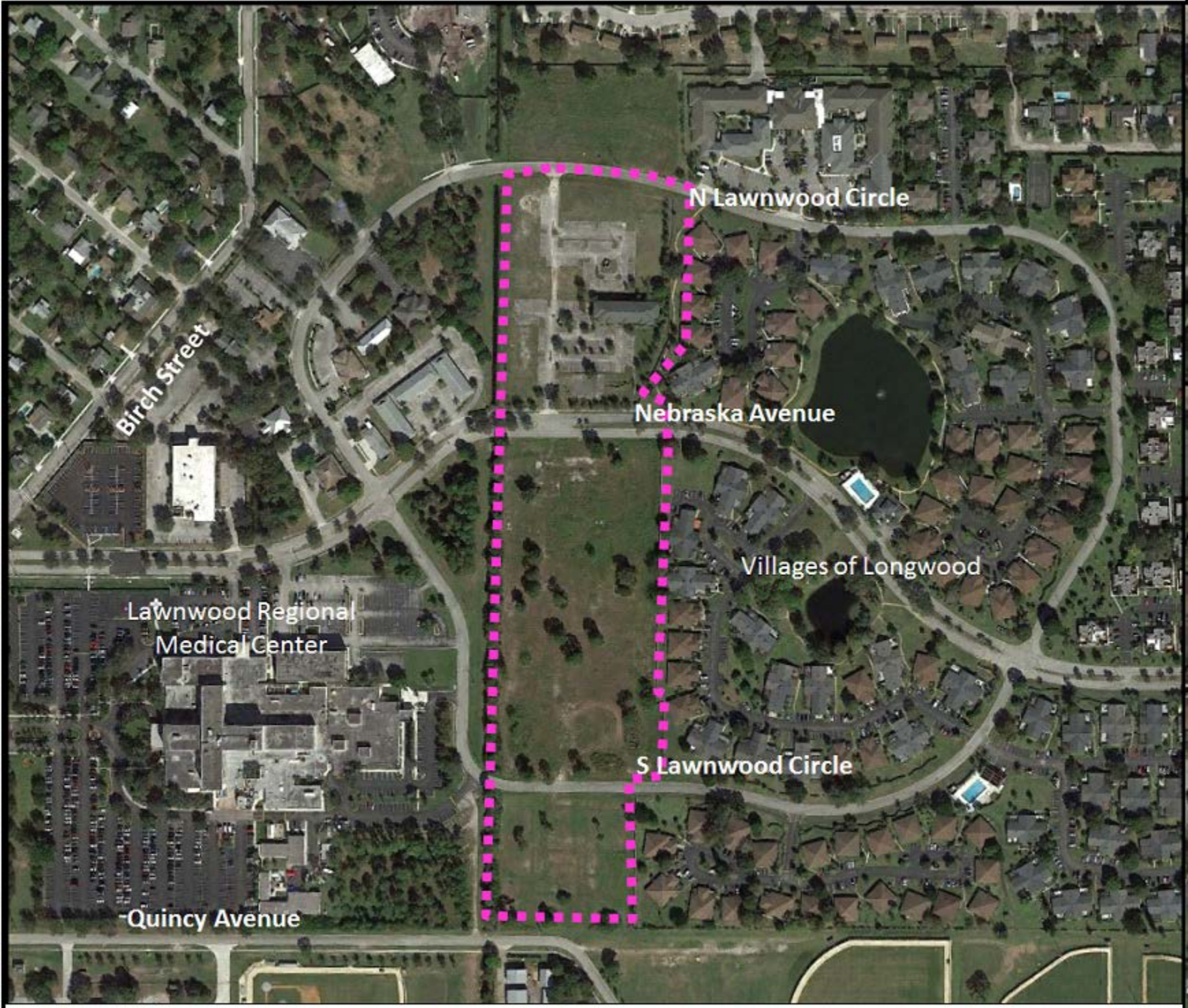


THE SUNRISE CITY
FORT PIERCE
Florida

# Mayfair at Lawnwood – Aerial

1801 Nebraska Avenue

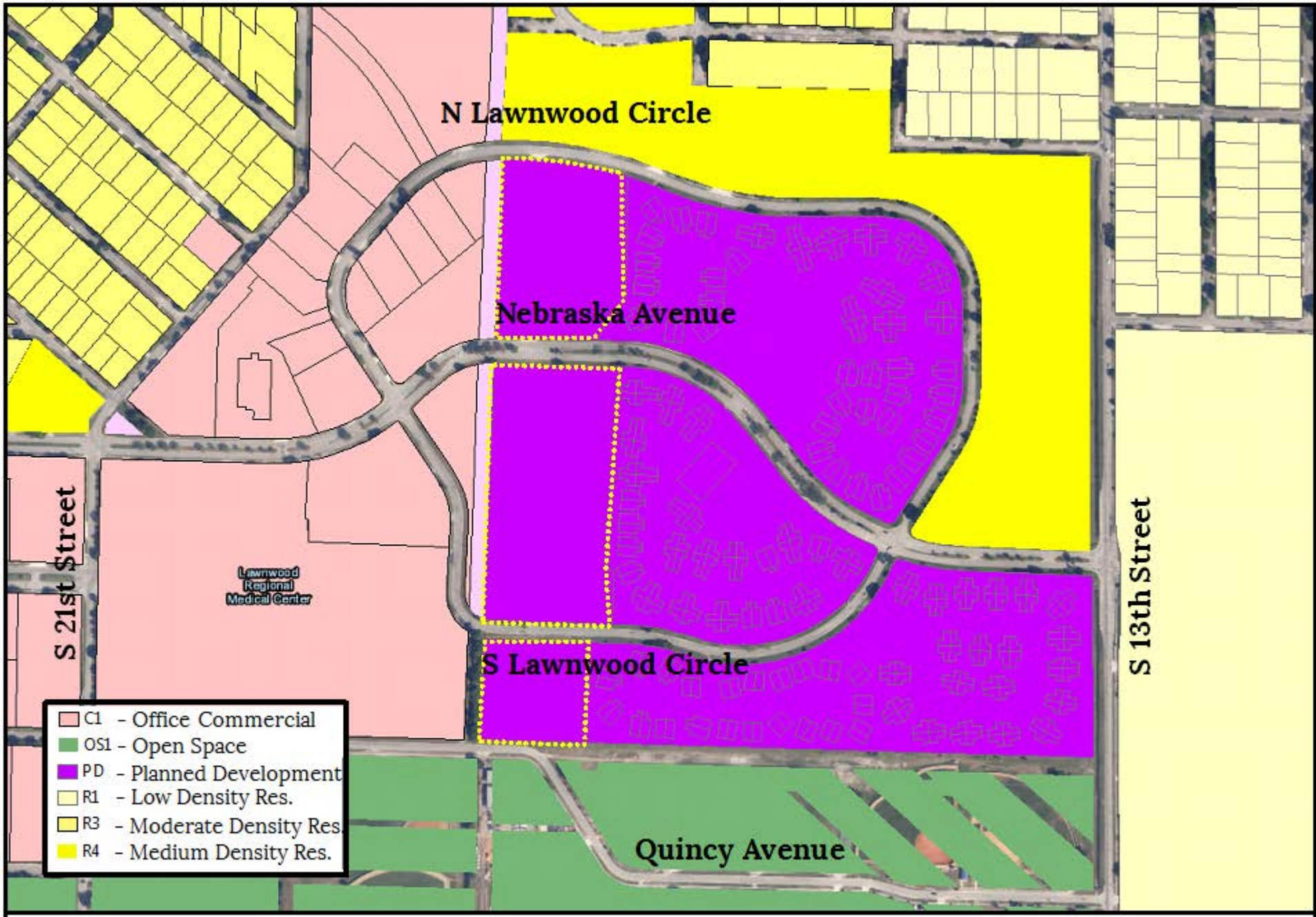


THE SUNRISE CITY FORT PIERCE Florida

# Mayfair at Lawnwood – Zoning Map

1801 Nebraska Avenue

**City Commission Regular Meeting** **11.b.**

**Meeting Date:** 01/02/2018

**Re:** Above Ground Fuel Tanks for David Hicks

**Submitted For:** Paul Thomas, Building Official, Building

---

**SUBJECT:**

Approval of the installation by David Hicks of two (2) 120 gallon aboveground propane tanks at 1502 Thumb Point Dr.

**SUMMARY:**

David Hicks has requested a permit to install two (2) 120 gallon aboveground propane tanks to service a generator at 1502 Thumb Point Dr. City Commission approval is required per Section 7-20 of the City Ordinance.

**RECOMMENDATION:**

Approve the request for the propane tanks.

**ALTERNATIVES:**

Deny the request for the propane tanks.

**RESPONSIBLE STAFF:**

Paul Thomas, Building Official

**COORDINATED WITH:**

Kristie Kirstein, Senior Permit Specialist

---

## Fiscal Impact

**OTHER INFORMATION:**

A gain of $214.13 to the Building Department Fund for permit and application fees.

---

## Attachments

1502 thumb Point Dr

---

## Form Review

| Inbox | Reviewed By | Date |
|---|---|---|
| Building | Paul Thomas | 12/19/2017 09:18 AM |
| City Manager | Nick Mimms | 12/22/2017 09:03 AM |

Form Started By: Kristie Kirstein Started On: 12/15/2017 07:19 AM

Final Approval Date: 12/22/2017

JOB SITE COPY

# CITY OF FORT PIERCE, FLORIDA
## BUILDING DEPARTMENT
## APPLICATION FOR BUILDING PERMIT

(772) 467-3529 or 467-3724 FAX (772) 467-3849

Permit # 17-3555

FBC 2014(5th edition)

PIN # 286055

*Property Address 1502 Thumb Point Dr *Date 12/4/17 *# of plans submitted ____ * # of CD's submitted ____

Parcel ID# 2401-605-0020-000-0 Phone # (____)_____-_____ Fax # (____)_____-_____

(Located on your tax bill) Email Address _____ Cell # (____)_____-_____

*Owner Name David Hicks *Owner Address 1502 Thumb Point Dr

Type of permit Propane tank and line *Valuation $ 1895.00

*Description of Work set 2-120 Aboveground propane tanks on side of house run line to generator.

Architect: _____ Phone(____)_____-_____ Fax (____)_____-_____

Email Address _____

Engineer: _____ Phone(____)_____-_____ Fax (____)_____-_____

Email Address _____

***CONTRACTOR/APPLICANT INFORMATION:** City License # _____ State License # 02707

Company Name AmeriGas Qualifier Larry Licastri

Address 3301 Orsander City/State Fort Pierce FL Zip 34982

Phone # (772)465-7886 Fax # (____)_____-_____ Cell # (772) 633-0740

Email Address _____

RECEIVED

DEC 08 2017

Building Department

**SUBCONTRACTORS: See Subcontractor Verification Sheet. It may be Required to accompany this application**

Occupancy SF Construction Type _____ # of Units _____ # of Stories _____

Sq. Ft. Conditioned Space _____ Total Sq. Ft. _____

Is the property located in a Special Flood Hazard Area (floodplain) per the current Flood Insurance Rate Map (FIRM)

CF ☒ Yes ☐ No

If Yes, the applicant must include certified elevation information on a FEMA NFIP Elevation Certificate.

I understand that no building may be occupied until a Certificate of Occupancy/Certificate of Completion has been issued after final inspection by the Building Department and full compliance with the building code, city and state ordinances and other applicable rules and regulations. I am also verifying that all sets of plans submitted are identical.

Signature of Applicant _____

State of Florida, County of St. Lucie

Affirmed to and subscribed before me this 5th

December, 2017, by Larry Licastri

personally known to me or who has produced

as identification. _____

Notary Signature: _____

Notary (print name) Amber L Diaz

Signature of Property Owner _____

State of Florida, County of _____

Affirmed to and subscribed before me this _____

20____, by _____

personally known to me or who has produced

as identification. _____

Notary Signature: _____

Notary (print name) _____

AMBER L DIAZ
MY COMMISSION # FF956145
EXPIRES February 01, 2020
FloridaNotaryServices.com
(321) 308 0753

Construction documents must accompany this application. The Florida energy code submitted becomes an integral part of this plan and must pass final inspection. "Notice: In addition to the requirements of this permit, there may be additional restrictions applicable to this property that may be found in the public record of this county, and there may be additional permits required from other governmental entities such as waste management district, state agencies, or federal agencies."SIGNATURE OF THE APPLICANT MUST BE NOTARIZED. If owner builder, applicant must sign in person. BUILDING PERMIT includes: Building, Electrical, Plumbing, Mechanical, and Sewer only. All other trades require separate permits.

***Required Information**

**Asbestos compliance: It is the owner's or operator's responsibility to comply with section 469.003, Florida Statutes, and to notify the Department of Environmental Protection of his or her intentions to remove asbestos, when applicable, in accordance with state and federal law.**

OFFICE USE ONLY

**FEES: * See the break Down Fee Sheet**

PC 100.00
OCA 2.00
OBPR 2.63

PL 75.00
RT 15.00
CC 4.50

Total Fees Due $ _____

Remarks _____

Reviewed by JCB Date 12-13-17 Final Check _____ Date _____

Department of Building & Community Response
P.O. Box 1480 ◦ 100 North U.S. 1 ◦ Fort Pierce, FL 34954
Phone: (772) 467-3529 or (772) 467-3724 ◦ Fax: (772) 467-3849

# "DEBRIS FORM"
# OWNER / BUILDER OR CONTRACTOR AFFIDAVIT

***As per City Ordinances 16-22, 16-46, 16-48 and*** As a condition of obtaining any permit for construction/repair or renovation:

Owner: DAVID HICKS

Property Address: 1502 THUMB POINTE DR

Permit # _____ Contractor: AMERIGAS

I understand and accept full responsibility for the prompt removal of all debris and construction materials from the property for which I am seeking to obtain a building permit in accordance with the Code of Ordinances of the City. Initials MM

I agree that no debris or construction materials will be placed on any public property or on any public right-of-way except as may be specifically authorized by the Code of Ordinances. Initials MM

I further understand that prior to a final inspection for the project completion or issuance of a Certificate of Occupancy (or Certificate of Completion), all debris and construction materials shall be removed from the property or the Inspector will not approve the final inspection. Additional reinspection fees shall apply. Initials MM

I understand and accept full responsibility for debris removal at my own expense in accordance with the City Code of Ordinances. Initials MM

**I hereby acknowledge that I have read and understand the above statements and I further understand that any violation of the terms of this affidavit shall be reported to the City of Fort Pierce Department of Building and Community Response for action and possible "stop-work" order under the issued permit.**

12/8/17 _____
Date Contractor or Owner/Builder's Signature

**It is the owner and contractor's responsibility to verify approval for any work through the Home Owner's Association and/or Condominium Association, if applicable. The City will not be held responsible for disputes between Home Owner's Association, Condominium Association, owner and/or contractor.**

12/8/17 _____
Date Contractor or Owner/Builder's Signature

"REVIEWED FOR CODE COMPLIANCE"

A permit issued shall be construed to be a license to proceed with the work and not as authority to violate, cancel, alter or set aside any of the provisions of the technical codes, nor shall issuance of a permit prevent the building official from thereafter requiring a correction of errors in plans, construction or violations of this code inadvertently overlooked during plan review as outlined in Chapter 1 Section 105.4 of the Florida Building Code. All proposed work is subject to any corrections required by field inspectors that may be necessary in order to comply with all applicable codes.

These plans and all proposed work are subject to any corrections required by field inspectors that may be necessary in order to comply with all applicable codes

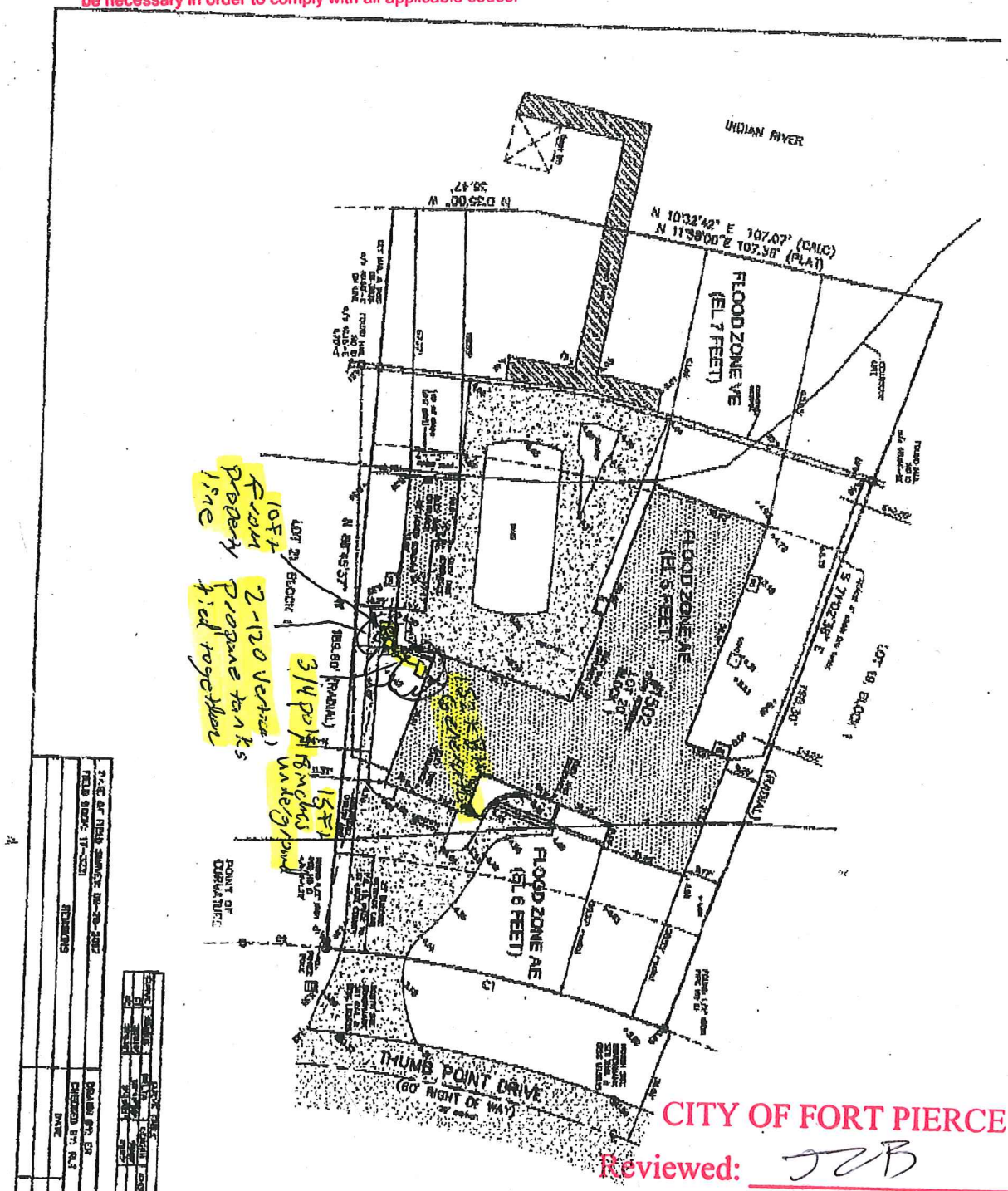


CITY OF FORT PIERCE

Reviewed: JCB

Date: 12-13-17

Copyright 2015 National Fire Protection Association (NFPA). Licensed, by agreement, for individual use and download on March 3, 2015 to AMERIGAS for designated user BRIAN PEARL. No other reproduction or transmission in any form permitted without written permission of NFPA. For inquires or to report unauthorized use, contact licensing@nfpa.org.



*TABLE 15.1(o) Polyethylene Plastic Pipe Sizing Between First-Stage and Second-Stage Regulators: Nominal Outside Diameter (IPS)*

| | |
|---|---|
| *Gas:* | *Undiluted Propane* |
| *Inlet Pressure:* | *10.0 psi* |
| *Pressure Drop:* | *1.0 psi* |
| *Specific Gravity:* | *1.52* |

| *Plastic Pipe Length (ft)* | *½ in. SDR 9.33 (0.660)* | *¾ in. SDR 11.0 (0.860)* | *1 in. SDR 11.0 (1.077)* | *1¼ in. SDR 10.00 (1.328)* | *1½ in. SDR 11.00 (1.554)* | *2 in. SDR 11.00 (1.943)* |
|---|---|---|---|---|---|---|
| 30 | 2143 | 4292 | 7744 | 13416 | 20260 | 36402 |
| 40 | 1835 | 3673 | 6628 | 11482 | 17340 | 31155 |
| 50 | 1626 | 3256 | 5874 | 10176 | 15368 | 27612 |
| 60 | 1473 | 2950 | 5322 | 9220 | 13924 | 25019 |
| 70 | 1355 | 2714 | 4896 | 8483 | 12810 | 23017 |
| 80 | 1261 | 2525 | 4555 | 7891 | 11918 | 21413 |
| 90 | 1183 | 2369 | 4274 | 7404 | 11182 | 20091 |
| 100 | 1117 | 2238 | 4037 | 6994 | 10562 | 18978 |
| 125 | 990 | 1983 | 3578 | 6199 | 9361 | 16820 |
| 150 | 897 | 1797 | 3242 | 5616 | 8482 | 15240 |
| 175 | 826 | 1653 | 2983 | 5167 | 7803 | 14020 |
| 200 | 778 | 1539 | 2775 | 4807 | 7259 | 13043 |
| 225 | 721 | 1443 | 2603 | 4510 | 6811 | 12238 |
| 250 | 681 | 1363 | 2459 | 4260 | 6434 | 11560 |
| 275 | 646 | 1294 | 2336 | 4046 | 6111 | 10979 |
| 300 | 617 | 1235 | 2228 | 3860 | 5830 | 10474 |
| 350 | 567 | 1136 | 2050 | 3551 | 5363 | 9636 |
| 400 | 528 | 1057 | 1907 | 3304 | 4989 | 8965 |
| 450 | 495 | 992 | 1789 | 3100 | 4681 | 8411 |
| 500 | 468 | 937 | 1690 | 2928 | 4422 | 7945 |
| 600 | 424 | 849 | 1531 | 2653 | 4007 | 7199 |
| 700 | 390 | 781 | 1409 | 2441 | 3686 | 6623 |
| 800 | 363 | 726 | 1311 | 2271 | 3429 | 6161 |
| 900 | 340 | 682 | 1230 | 2131 | 3217 | 5781 |
| 1000 | 322 | 644 | 1162 | 2012 | 3039 | 5461 |
| 1500 | 258 | 517 | 933 | 1616 | 2441 | 4385 |
| 2000 | 221 | 443 | 798 | 1383 | 2089 | 3753 |

IPS: Iron pipe size. SDR: Standard dimension ratio.

Notes:

(1) Capacities are in 1000 Btu/hr.

(2) Dimensions in parentheses are inside diameter.

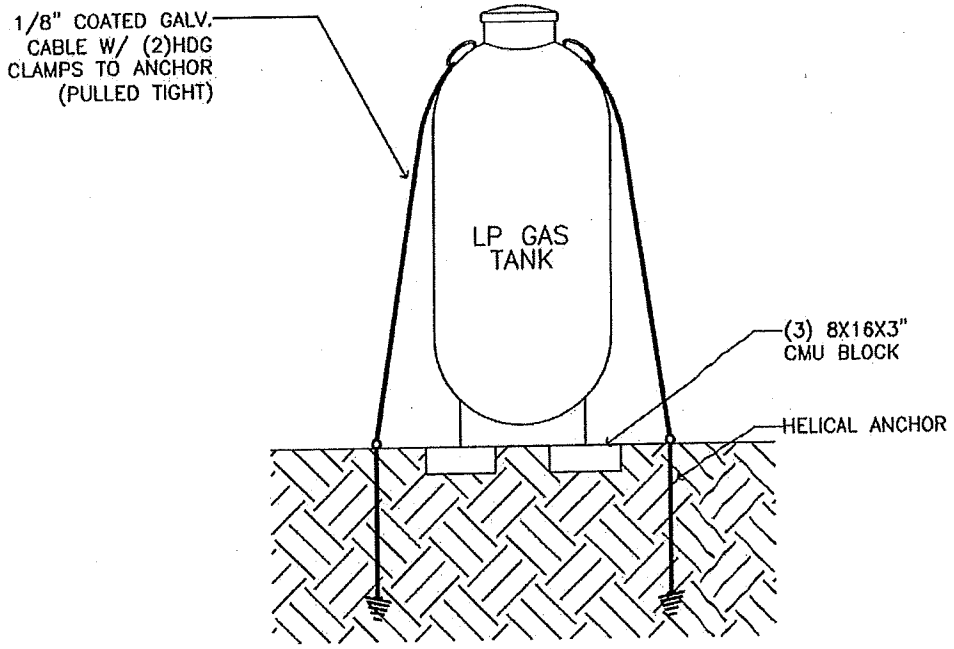


GENERAL NOTES:

1. HELICAL ANCHOR SHALL HAVE AN ALLOWABLE PULL-OUT CAPACITY OF 400#. ANCHORS SHALL BE INSTALLED PER ANCHOR MANUFACTURER TO ACHIEVE STATED LOAD CAPACITY. CAPACITY VARIES WITH SOIL TYPE. VERIFY ANCHOR CAPACITY WITH SOIL TYPE ENCOUNTERED.
2. CHECK FOR UNDERGROUND UTILITIES PRIOR TO ANCHOR INSTALLATION
3. LOCATION OF TANK RELATIVE TO ADJACENT STRUCTURES AND FEATURES IS DEPENDENT UPON LOCAL CODES AND IS THE RESPONSIBILITY OF OTHERS.
4. THE TANK AS SHOWN HAS BEEN DESIGNED TO PREVENT FLOTATION, COLLAPSE, OR LATERAL MOVEMENT DURING THE BASE FLOOD EVENT.
5. WIND LOAD DESIGN CRITERIA
   160 MPH; EXPOSURE D; GCpi N/A; Cf = 0.6

FARLEY ENGINEERING LLC
LICENSE No. 40111
STATE OF FLORIDA
PROFESSIONAL ENGINEER

© COPYRIGHT 2017 – FARLEY ENGINEERING, LLC

| PAGE | DATE: | AMERIGAS | FARLEY ENGINEERING LLC |
|---|---|---|---|
| 1 of 1 | 03-20-2017 | | Consulting Engineer #40111 – CA28108<br>8800 N. U.S. #1, Suite #2 , Sebastian, Florida 32958<br>(772) 589.2286 fax |

**City Commission Regular Meeting** **11.c.**

**Meeting Date:** 01/02/2018

**Re:** Above Ground Storage Tanks for Walmart Stores

**Submitted For:** Paul Thomas, Building Official, Building

---

**SUBJECT:**

Approval of the removal and replacement by Walmart Stores of two (2) 400 gallon, one (1) 700 gallon, one (1) 200 gallon and one (1) 25 gallon aboveground storage tanks at 5100 Okeechobee Road.

**SUMMARY:**

Walmart Stores has requested a permit to install two (2) 400 gallon, one (1) 700 gallon, one (1) 200 gallon and one (1) 25 gallon aboveground storage tanks to store bulk oil in the Automotive Center at 5100 Okeechobee Road. City Commission approval is required per Section 7-20 of the City Ordinance.

**RECOMMENDATION:**

Approve the request to install the storage tanks.

**ALTERNATIVES:**

Deny the request to install the storage tanks.

**RESPONSIBLE STAFF:**

Paul Thomas, Building Official

**COORDINATED WITH:**

Kristie Kirstein, Senior Permit Specialist

---

## Fiscal Impact

**OTHER INFORMATION:**

A gain of $293.00 to the Building Department Fund for permit and application fees.

---

## Attachments

5100 Okeechobee Rd

---

## Form Review

| Inbox | Reviewed By | Date |
|---|---|---|
| Building | Paul Thomas | 12/22/2017 10:59 AM |
| City Manager | Nick Mimms | 12/22/2017 04:59 PM |

Form Started By: Kristie Kirstein Started On: 12/21/2017 01:04 PM

Final Approval Date: 12/22/2017

**CITY OF FORT PIERCE, FLORIDA**
**BUILDING DEPARTMENT**
**APPLICATION FOR BUILDING PERMIT**
(772) 467-3529 or 467-3724 FAX (772) 467-3849

Permit # 17-3741
FBC 2014(5th edition)
PIN # 278415

*Property Address 5100 Okeechobee Rd *Date 12/8/17 # of plans submitted 2 * # of CD's submitted ____
Parcel ID# 2419-020-0030-0004 Phone # (479) 204-2501 Fax # (____)____-____
(Located on your tax bill) Email Address _____ Cell # (____)____-____
*Owner Name Wal-Mart Stores East, LP *Owner Address 508 SW 8th St. Bentonville, AR 72712

Type of permit Building Permit *Valuation $ 15,000.00
*Description of Work Installing 2-400gallon, 1-700gallon, and 1-200 gallon and 25gallon above ground storage tanks
Architect: _____ Phone(____)____-____ Fax (____)____-____
Email Address N/A
Engineer: _____ Phone(____)____-____ Fax (____)____-____
Email Address _____

*CONTRACTOR/APPLICANT INFORMATION: City License # _____ State License # _____
Company Name United Installers, LLC Qualifier Joshua Reynolds
Address 2112 Britt Rd. City/State Douglasville, GA Zip 30135
Phone # (770) 694-6962 Fax # (770) 575-1094 Cell # (770) 694-6962
Email Address tanks@unitedinstallersplumbing.com

RECEIVED DEC 19 2017 Building Department

**SUBCONTRACTORS: See Subcontractor Verification Sheet. It may be Required to accompany this application**
Occupancy _____ Construction Type _____ # of Units _____ # of Stories _____
Sq. Ft. Conditioned Space _____ Total Sq. Ft. _____
Is the property located in a Special Flood Hazard Area (floodplain) per the current Flood Insurance Rate Map (FIRM)
☐ Yes ☒ No
If Yes, the applicant must include certified elevation information on a FEMA NFIP Elevation Certificate.

I understand that no building may be occupied until a Certificate of Occupancy/Certificate of Completion has been issued after final inspection by the Building Department and full compliance with the building code, city and state ordinances and other applicable rules and regulations. I am also verifying that all sets of plans submitted are identical.

Signature of Applicant _____
State of ~~Florida~~ Georgia, County of Douglas
Affirmed to and subscribed before me this 15th December, 2017, by Kristen Carter
personally known to me or who has produced
as identification. State ID
Notary Signature: _____
Notary (print name) _____

Signature of Property Owner Patricia E. Guthrie
State of ~~Florida~~ AR, County of Benton
Affirmed to and subscribed before me this Dec. 14
2017, by _____
personally known to me or who has produced
as identification. State ID
Notary Signature: Deidra Williams
Notary (print name) Deidra Williams

OFFICIAL SEAL
DEIDRA WILLIAMS
BENTON COUNTY
NOTARY PUBLIC - ARKANSAS
MY COMMISSION EXP. JUNE 2, 2024
COMMISSION# 12399654

Construction documents must accompany this application. The Florida energy code submitted becomes an integral part of this plan and must pass final inspection. "Notice: In addition to the requirements of this permit, there may be additional restrictions applicable to this property that may be found in the public record of this county, and there may be additional permits required from other governmental entities such as waste management district, state agencies, or federal agencies."SIGNATURE OF THE APPLICANT MUST BE NOTARIZED. If owner builder, applicant must sign in person. BUILDING PERMIT includes: Building, Electrical, Plumbing, Mechanical, and Sewer only. All other trades require separate permits.
***Required Information**

**Asbestos compliance: It is the owner's or operator's responsibility to comply with section 469.003, Florida Statutes, and to notify the Department of Environmental Protection of his or her intentions to remove asbestos, when applicable, in accordance with state and federal law.**

OFFICE USE ONLY

**FEES: * See the break Down Fee Sheet**
Total Fees Due $ _____
Remarks _____
Reviewed by _____ Date _____ Final Check _____ Date _____

PL 75 / 165.00
PT 30 / 55.25
110.25

# Walmart 973
## 5100 Okeechobee Road
## Ft Pierce, Florida

## Storage Tank Replacement Project

**Purpose of Tanks:**
Tanks are used to store bulk oil in the Automotive Center

**General Scope of Work:**
Replace Existing Small Aboveground Oil Tanks with same or smaller size

**Scope of Work:**
1) Disconnect (at tanks) the vent lines which vent to outside building
2) Disconnect (at tanks) product supply piping and air lines
3) Move existing tanks (4) from their current positions to staging area/s
4) Position new tanks (4) where the existing tanks were
5) Transfer any remaining product from old tanks to the new tanks
6) Re-Make existing connections at immediate tank areas
   * vent lines, air lines and product lines
7) Install tank equipment (Overfill valve, emergency vents, etc.)
8) Air Test tank/s as required
9) Remove and replace the DIY Tank free standing 200 gallon tank

**Tank Schedule:**

| Remove | Replace With a New |
|---|---|
| 800 Gallon Used Oil | 700 Gallon Used Oil |
| 400 Gallon New Oil | 400 Gallon New Oil |
| 400 Gallon New Oil | 400 Gallon New Oil |
| 200 Gallon Used Oil | 200 Gallon Used Oil |
| 25 Gallon Used Oil | 25 Gallon Used Oil |

**Note:**
This project involves replacement of existing tanks with same kind and size or smaller, thus it does not involve any new design, structural work or sub-trade work. It is a Maintenance Item.

Walmart Supercenter #973
5100 Okeechobee Road
Fort Pierce, FL 34947
St. Lucie County

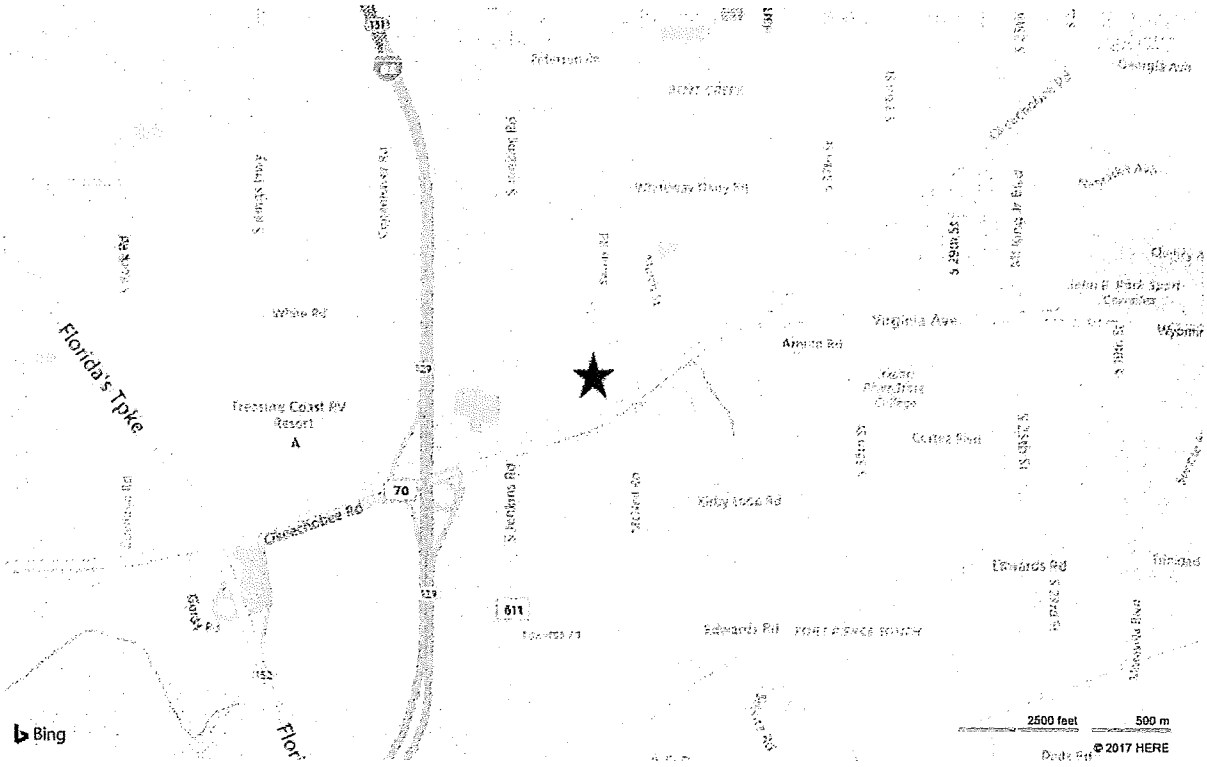


Project Scope: Replace the following five (5) Auto Care Center aboveground storage tanks (ASTs):

- (1) 800-gal tank with (1) 700-gal tank (used motor oil)
- (2) 400-gal tanks with (2) 400-gal tanks (new motor oil)
- (1) 240-gal tank with (1) 200-gal tank (used motor oil)
- (1) 25-gal tank with (1) 25-gal tank (used motor oil)

Five (5) aboveground storage tanks to be replaced in the Auto Care Center. See enlarged drawing for detail.

## SHEET NOTES

1. ENSURE ALL EXISTING WALL STANDARDS AND HALF GONDOLAS TO REMAIN ARE SECURE TO WALL.
2. NOT USED.
3. REFER TO RACK ANCHORAGE PLAN FOR STEEL RACK AND/OR GONDOLA SHELVING FIXTURE ANCHORING REQUIREMENTS.
4. REPLACE ALL EXISTING ADJUSTABLE TUBE COUNTER SUPPORTS THROUGH OUT THE STORE REF 1-A4 FOR NEW SUPPORTS AND SPACING.
5. REMOVE EXISTING CAULK AT MOP SINKS AND RE-CAULK PER MANUFACTURER'S RECOMMENDATION.
6. REMOVE, RELOCATE AND/OR INSTALL PREFABRICATED CASH WRAP(S) FOR CHECKOUTS PER STORE PLANNING FIELD PROJECT MANAGER. CAULK BASE TO FLOOR WHEN LOCATION IS FINALIZED.
7. REF TO SPEC SECTION 01500 FOR DETAILS AND REQUIREMENTS FOR STORMWATER POLLUTION CONTROLS AND SITE STORAGE OF MATERIALS AND EQUIPMENT. DEVIATION(S) FROM DETAILS SHOWN MUST BE SUBMITTED FOR APPROVAL IN ACCORDANCE WITH SPEC SECTION 01330.
8. NOT USED.
9. RELOCATION AND SETUP OF GONDOLAS AND/OR RACKING AS INDICATED ON FXS SHEETS WILL BE PERFORMED BY OWNERS. ANCHORING OF UPRIGHTS TO BE PERFORMED BY GENERAL CONTRACTOR.
10. PAINT ALL UNSLEEVED STEEL BOLLARDS THROUGHOUT THE STORE PS
11. INSTALL ALUMINUM CORNER GUARDS AT ALL OUTSIDE CORNERS WITH PLASTIC LAMINATE WAINSCOT. LOCATIONS SHOWN IN PLAN AND ELEVATION ARE NOT INDICATIVE OF ALL LOCATIONS WHERE CORNER GUARDS ARE TO BE INSTALLED.

## KEYNOTES

6.43 INSTALL 3/4" PLYWOOD BEHIND BALER TO 6'-0" AFF, 0'-0" WIDE
9.00 PAINTED STRIPES. REF M1 FOR STRIPING CONDITIONS.
10.44 PROVIDE TACTILE "EXIT" SIGN, REF M1

NOTE: REFER TO FXS SHEETS FOR ALL INFORMATION PERTAINING TO RACKING SCOPE OF WORK

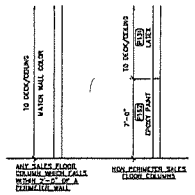


2 COLUMN COLORS
1/4"=1'-0" 062310 C1-A010-002

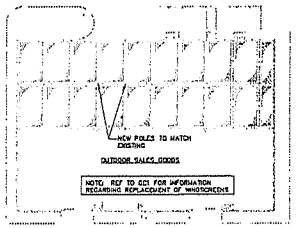


1A OUTDOOR SALES GOODS
1" = 20'-0" 6010-001

| 100 SALES |
|---|
| WALL FINISHES |
| GYP BD: PAINT 131 TO CEILING WHERE EXISTING OR FULL HEIGHT WHERE OPEN TO STRUCTURE INSTALL P132 WAINSCOT AND DBS BASE UNO EXTEND WAINSCOT AND BASE AT EXPOSED WALL TO NEAREST MERCHANDISE RACK REF 3-A3. |
| CMU: PAINT 131 TO CEILING WHERE EXISTING PAINT FULL HEIGHT WHERE OPEN TO STRUCTURE. WHERE BASE IS EXISTING, IT IS ETR REPLACE WITH DBS BASE WHEN DAMAGED. |
| SOFFITS AND BULKHEADS: P131 FULL HEIGHT UNO. |
| FLOOR |
| VCT: PIECE REPLACE VCT AS DIRECTED BY CM TO MATCH EXISTING. REFER TO SHEET A1.1 FOR ADDITIONAL SOW. |
| CEILING |
| OPEN TO STRUCTURE: CLEAN AND PAINT EXPOSED HVAC DUCT WORK AND PLENUMS TO MATCH PAINTED STRUCTURE. PAINT SHEEN SEMI-GLOSS. CLEAN JOISTS, JOIST GIRDERS, DECKING, CONDUIT, SPRINKLER PIPES, AIR GRILLES/DIFFUSERS AND SECURITY GLOBES. |
| GYP BD: CLEAN CEILING, HVAC GRILLES/DIFFUSERS, SECURITY GLOBES AND SPRINKLER HEADS, CLEAN LIGTH LENSES UNO. REPLACE ANY DAMAGED ITEMS. PAINT CEILING P131 |
| COLUMNS |
| REF DETAIL 2-A1 |
| PAINT STRUCTURAL COMPONENTS ADJACENT TO WALLS P131 |

| 178 GM-RECEIVING AND 179 GM-STOCKROOM |
|---|
| WALL FINISHES |
| REPAIR ALL DAMAGED DRYWALL THAT IS VISIBLE |
| CEILING |
| OPEN TO STRUCTURE: CLEAN JOISTS, JOIST GIRDERS, DECKING, CONDUIT, SPRINKLER PIPES, AIR GRILLES/DIFFUSERS AND SECURITY GLOBES. |
| COMPACTOR |
| INFILL OPENING AT COMPACTOR DOOR NO LONGER IN USE, REF A2 |

| 400 SUBWAY- FOOD TENANT |
|---|
| WALL FINISH |
| ETR |
| FLOOR |
| VCT: PIECE REPLACE AS REQUIRED |
| OTHER |
| IN GENERAL ALL ELECTRICAL DEVICES ETR |
| CLEAN RECEPTACLES AND COVER PLATES AND REPLACE DAMAGED OR MISSING RECEPTACLES AND COVER PLATES |

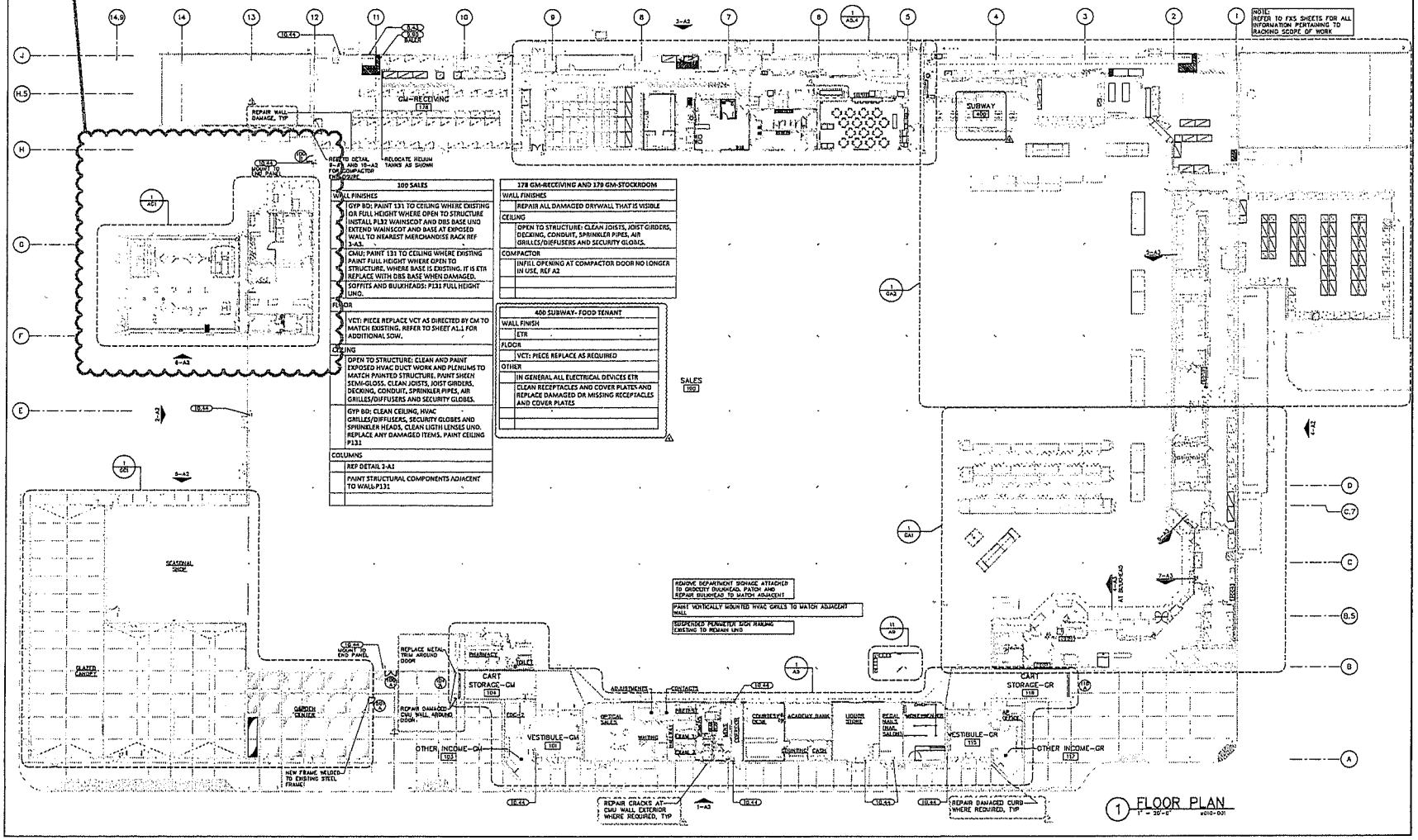


1 FLOOR PLAN
1" = 20'-0" 6010-001

Cabael & Peterson Architects, Inc. and Planners

STIPULATION FOR ISSUE
THE ARCHITECT'S SEAL AND SIGNATURE ON THIS DOCUMENT IS A CERTIFICATION THAT THE DOCUMENT WAS PREPARED BY THE ARCHITECT OR UNDER THE ARCHITECT'S DIRECT SUPERVISION AND THAT THE ARCHITECT HAS EXAMINED THE DOCUMENT AND FOUND IT TO BE COMPLETE AND ACCURATE TO THE BEST OF HIS KNOWLEDGE AND BELIEF.

CONSULTANTS

Walmart
FORT PIERCE, FL
STORE NO.3773
1ST GENERAL REVISION
PDD REVIEW: 2156166

| ISSUE BLOCK | | |
|---|---|---|
| 4 | 1ST GENERAL REVISION | 01/24/25 |
| 3 | PDD REVIEW | 04/01/17 |
| 2 | PERMIT | 03/24/17 |
| 1 | CCD#3 | 01/23/17 |

| | |
|---|---|
| CHECKED BY: | LP |
| DRAWN BY: | RZ |
| PROJ#: | 169 |
| PROJ# CYCLE: | 063016 |
| DOCUMENT DATE: | 111116 |

NOT FOR CONSTRUCTION

FLOOR PLAN

SHEET: A1

Replace current 240-gallon tank with a 200-gallon tank. Stores customer returned used motor oil.

Replace current 800-gallon tank with a 700-gallon tank. Stores used motor oil.

Replace current (2) 400-gallon tanks with (2) 400-gallon tanks (same size replacement). Stores new motor oil (5W20/5W30)

Replace current 25-gallon tank with a 25-gallon tank (same size replacement). Stores used motor oil squeezed from used oil filters.

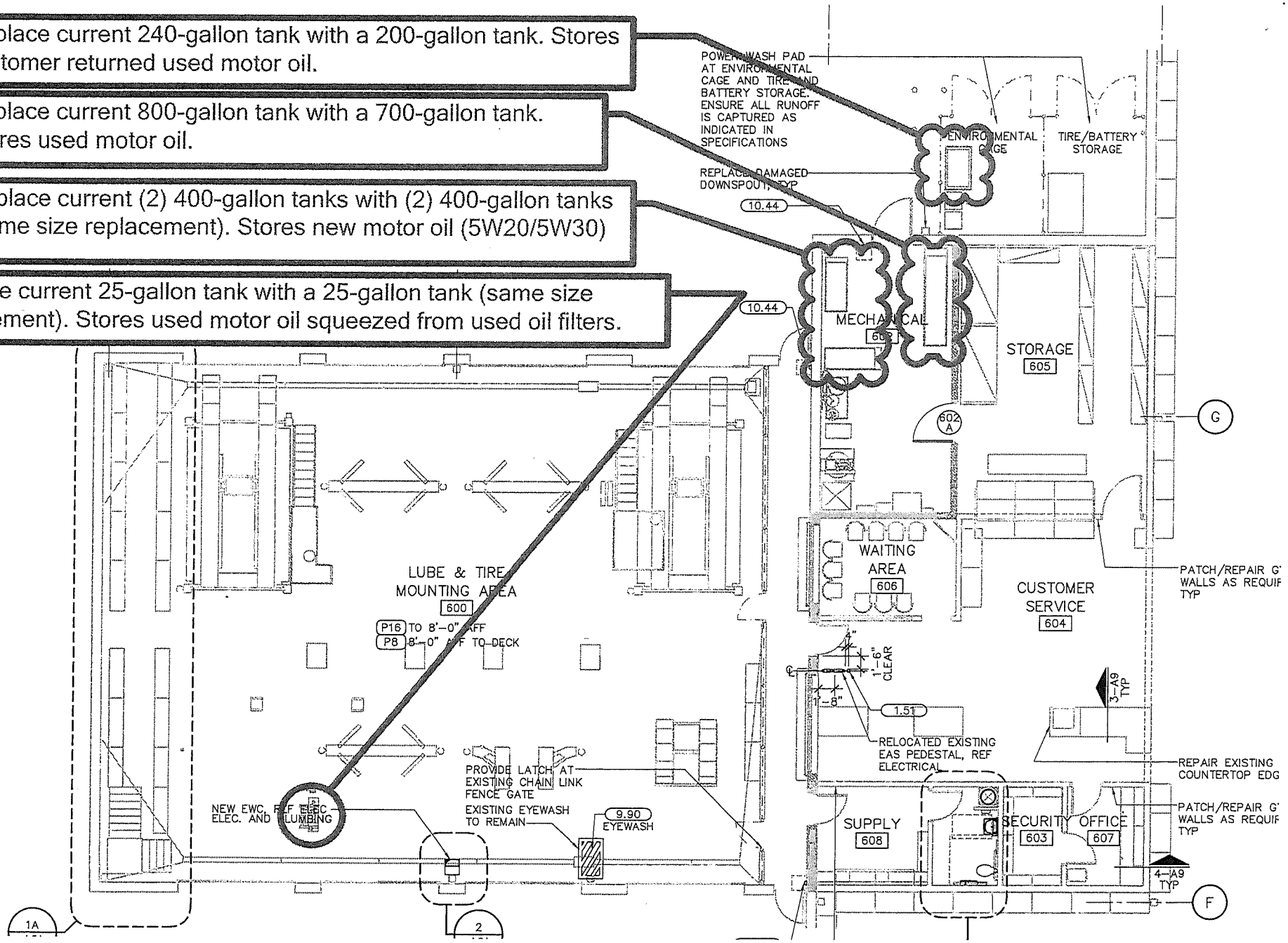

NOTE:
BLACK EPOXY COATING

NOTE:
OVERALL SHIPPING DIMENSION: 3'-7" L X 10" W X 3'-3" H

| ITEM | SIZE | SUGGESTED FUNCTION |
|---|---|---|
| 1 | 2" | PRIMARY TANK WORKING VENT (MORR. #354) |
| 2 | 2" | HIGH LEVEL SHUT-OFF |
| 3 | 2" | MECHANICAL GAUGE (KRUEGER H2-30) |
| 4 | 3/4" | INLET |
| 5 | 3" | PRIMARY TANK EMERGENCY VENT |
| 6 | SMALL | LIFTING LUG |
| 7 | 3/4" | PRIMARY DRAIN |
| 8 | 3" | SECONDARY CONTAINMENT EMERGENCY VENT |
| 9 | 2" | SECONDARY MONITOR PORT |

TANK SPECIFICATIONS
VENTING CAPACITY: PRIMARY TANK - 21,100 CUBIC FEET PER HOUR
SECONDARY TANK - 31,600 CUBIC FEET PER HOUR
MATERIAL: PRIMARY TANK - 10 GA.
SECONDARY TANK - 10 GA.

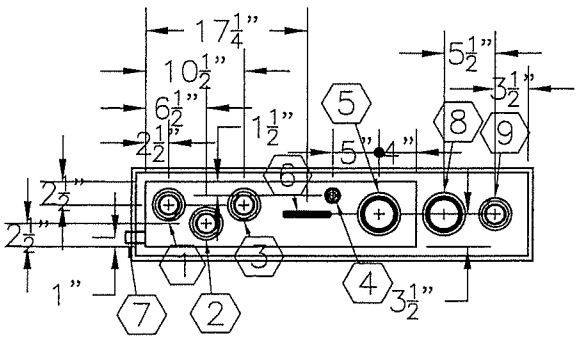


TOP VIEW

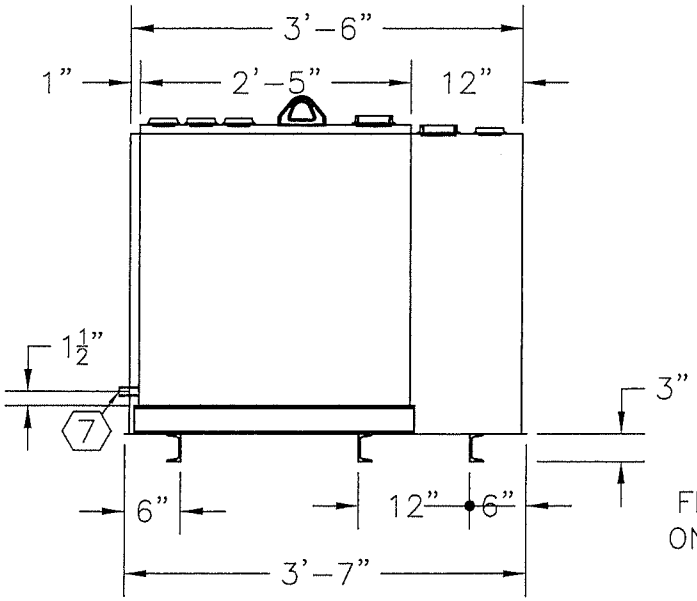


ELEVATION

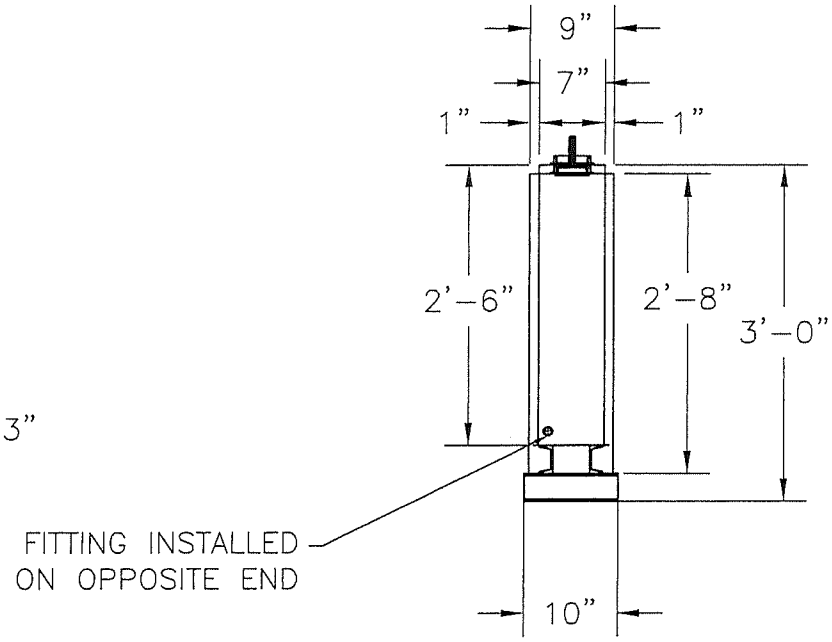


END VIEW

| PRODUCT CODE | GALLONS | DESCRIPTION | OVERALL SIZE | SHIP WT. |
|---|---|---|---|---|
| LCAA1025D8500 | 25 | UL-142 DOUBLE WALL LUBE CUBE TANK | 3'-7" L X 10" W X 3'-0" H | 325 LBS. |

THIS DRAWING AND DESIGN SHOWN HEREIN IS THE PROPERTY OF CONTAINMENT SOLUTIONS. USE OR COPIES THEREOF CANNOT BE MADE WITHOUT WRITTEN CONSENT.

CUSTOMER NAME

APPROVED BY: _____ DATE: _____

CONTAINMENT SOLUTIONS®

| | |
|---|---|
| DRAWN BY: D. ROVANG | DATE DRAWN: 07-10-15 |
| DWG NUMBER: 5106276 | SCALE: 1:24 |
| REV:A REV BY:DAR DATE: 07-15-15 | SHEET:1 OF 1 |

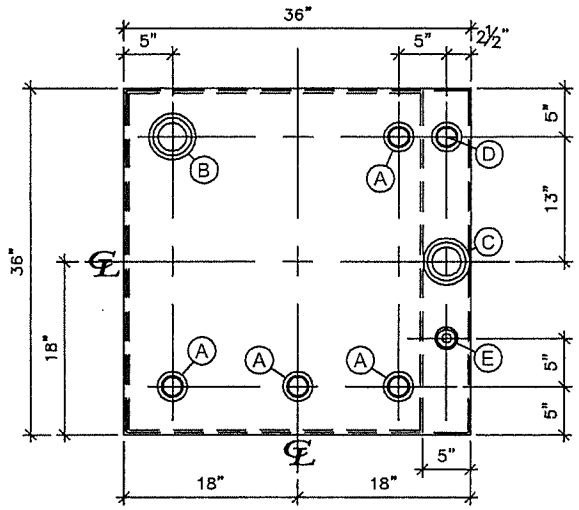


PLAN VIEW

| NOZZLE SCHEDULE | | | | | | | | |
|---|---|---|---|---|---|---|---|---|
| ITEM | SIZE | RATING | TYPE | MATL | PROJ IN | PROJ OUT | REMARKS | NOTES |
| A | 2" | STD. | W.F. | C.S. | STD. | STD. | | |
| B | 3" | STD. | W.F. | C.S. | STD. | STD. | PRIMARY | EMERGENCY VENT |
| C | 3" | STD. | W.F. | C.S. | STD. | STD. | SECONDARY | EMERGENCY VENT |
| D | 2" | STD. | W.F. | C.S. | STD. | STD. | SECONDARY | MONITOR |
| E | 1" | STD. | W.F. | C.S. | STD. | STD. | SECONDARY | DIP STICK |

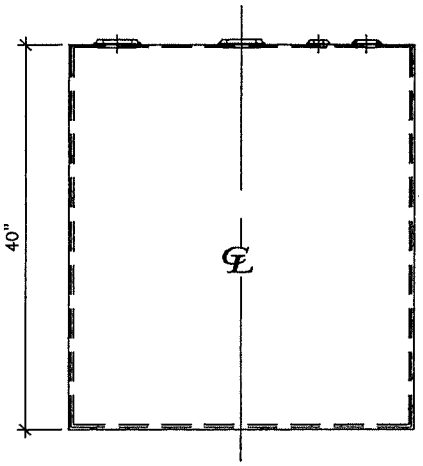


LEFT VIEW

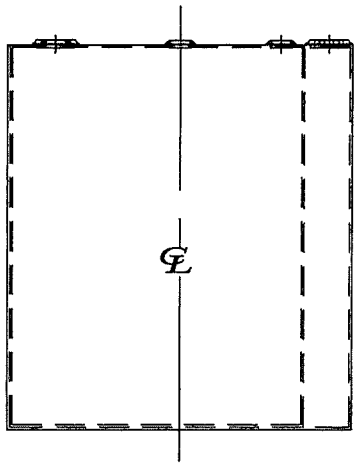

FRONT VIEW

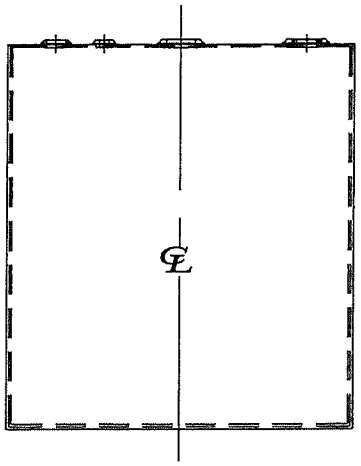

RIGHT VIEW

FAITH TANK

VESSEL DESCRIPTION:
193 GALLON CAPACITY DOUBLE WALL
STORAGE TANK UL-142 LISTED MODEL DW-200

CUSTOMER:
Customer Name

| DATE: | SCALE: | DWG.# |
|---|---|---|
| 01-31-11 | 1"=1'-0" | FAITH TANK 4R2 |

Faith Tank 510 Mound City Road West Memphis, AR. 72301 800-533-2184 www.faithtank.com

This drawing may contain PRIVILEGED and CONFIDENTIAL information and is intended only for the use of the specific individual(s) to which it is addressed.

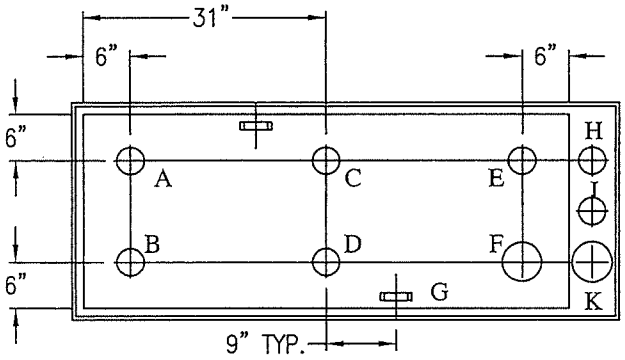


TOP VIEW

| ITEM | SIZE | FUNCTION |
|---|---|---|
| A | 2" | PUMP SUPPLY |
| B | 2" | FILL W/CAP |
| C | 2" | MECHANICAL GAUGE(SHIP TO SITE) |
| D | 2" | SPARE W/PVC PLUG |
| E | 2" | PRIMARY WORKING VENT |
| F | 4" | PRIMARY TANK EMERGENCY VENT |
| G | SMALL | LIFTING LUG(TYP. 2 PLCS.) |
| H | 2" | SECONDARY WORKING VENT |
| J | 2" | MONITORING PORT/SPARE |
| K | 4" | SECONDARY CONTAINMENT EMERGENCY VENT |

OPENINGS LABELED "SPARE" MAY BE CHANGED TO ACCOMMODATE CUSTOMER'S NEEDS

NOTES:
1. VENTING CAPACITY:
   · PRIMARY TANK - 94,800 CUBIC FEET PER HOUR
   · SECONDARY TANK - 105,000 CUBIC FEET PER HOUR

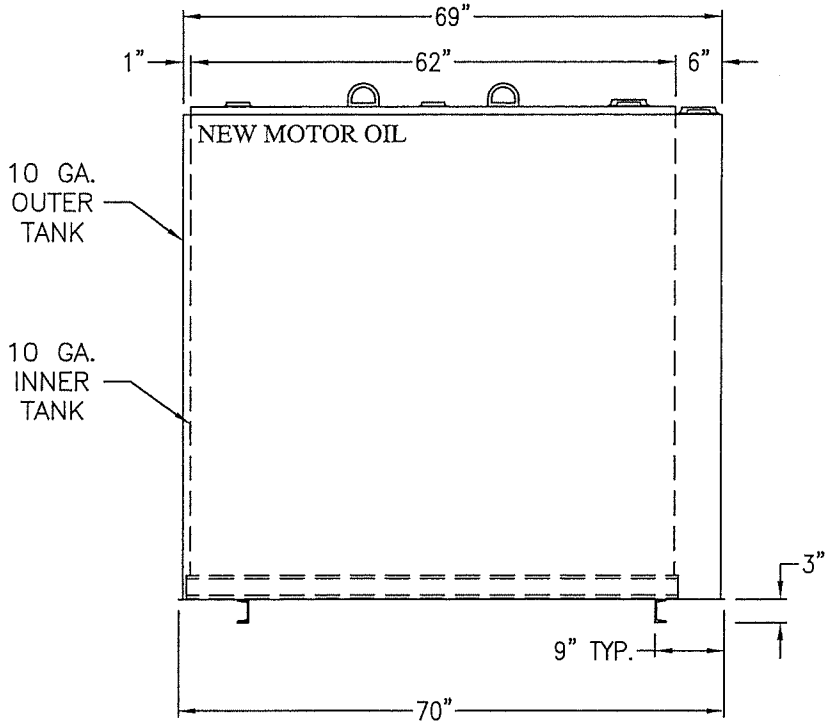


ELEVATION

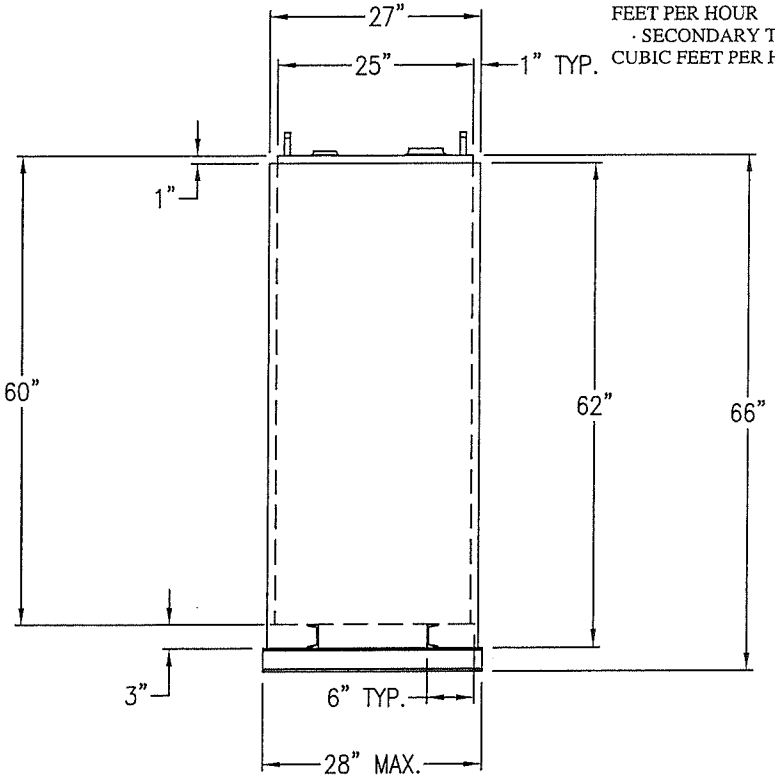


| PRODUCT CODE | GALLONS | DESCRIPTION | OVERALL SIZE | SHIP WT. |
|---|---|---|---|---|
| LCAA1400D8204 | 400 | UL-142 DW LUBE CUBE | 5'10"L X 2'4"W X 5'6"H | 1,150 LBS |

THIS DRAWING AND THE DESIGN SHOWN HEREIN IS THE PROPERTY OF THE DENALI COMPANY. USE OR COPIES THEREOF CANNOT BE MADE WITHOUT WRITTEN CONSENT.

CONTAINMENT SOLUTIONS
A DENALI COMPANY

| CUSTOMER NAME | APPROVED BY: | DATE: |
|---|---|---|
| WALMART | | |

| | | | |
|---|---|---|---|
| DRAWN BY: RPH | | DATE DRAWN: 12/27/02 | |
| DWG NUMBER: 102706 | | DWG. TYP: SALES | |
| REV: | REV BY: | DATE: | SHEET: 1 OF 1 |

| ITEM | SIZE | SUGGESTED FUNCTION |
|---|---|---|
| 1 | 2" | SPARE |
| 2 | 4" | FILL |
| 3 | 2" | PRIMARY TANK WORKING VENT |
| 4 | 2" | MECHANICAL GUAGE/ SPARE |
| 5 | 6" | PRIMARY TANK EMERGENCY VENT |
| 6 | SMALL | LIFTING LUG |
| 7 | 6" | SECONDARY CONTAINMENT EMERGENCY VENT |
| 8 | 2" | SECONDARY MONITOR PORT/ SPARE |
| 9 | 2" | SECONDARY WORKING VENT |

TANK SPECIFICATIONS

VENTING CAPACITY: PRIMARY TANK-147,000 CUBIC FEET PER HOUR
SECONDARY TANK - 168,000 CUBIC FEET PER HOUR

MATERIAL: PRIMARY TANK - 10 GA.
SECONDARY TANK - 10 GA.

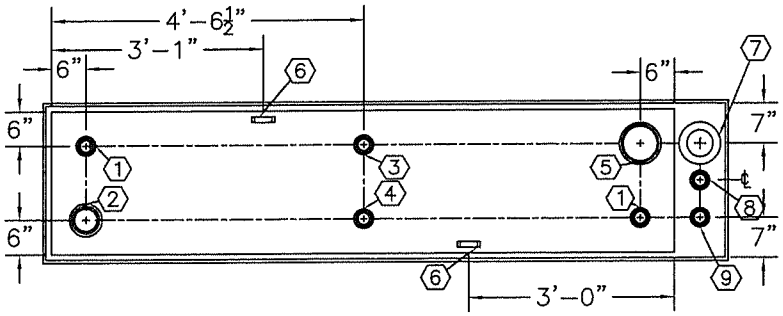


TOP VIEW

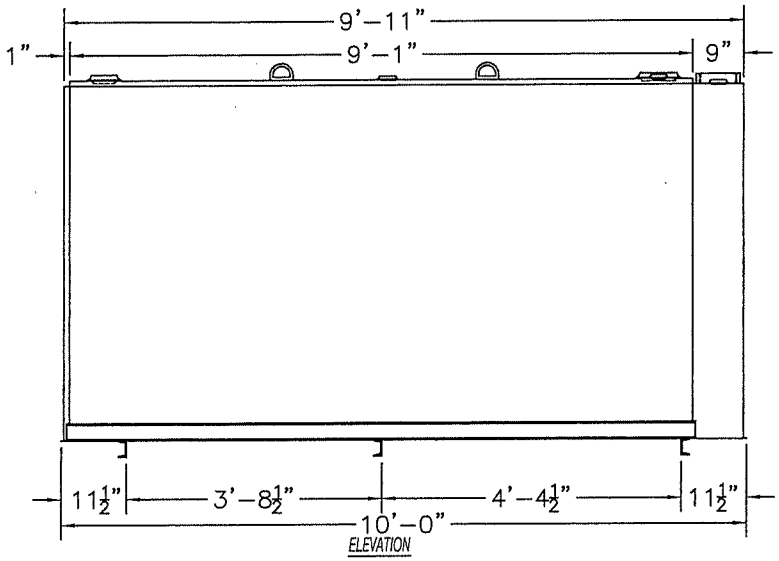


ELEVATION

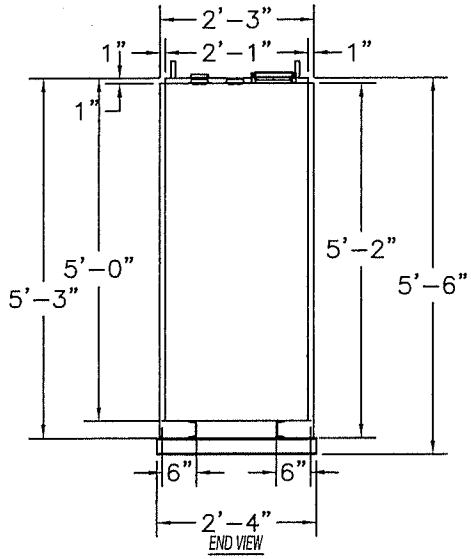


END VIEW

| PRODUCT CODE | GALLONS | DESCRIPTION | OVERALL SIZE | SHIP WT. |
|---|---|---|---|---|
| LCAA1700D8502 | 700 | UL-142 DOUBLE WALL LUBE CUBE TANK | 10'-0" L X 2'-4" W X 5'-6" H | 1,725 LBS. |

THIS DRAWING AND DESIGN SHOWN HEREIN IS THE PROPERTY OF CONTAINMENT SOLUTIONS. USE OR COPIES THEREOF CANNOT BE MADE WITHOUT WRITTEN CONSENT.

CONTAINMENT SOLUTIONS

| CUSTOMER NAME | APPROVED BY: | DATE: |
|---|---|---|
| WAL-MART | | |

| | |
|---|---|
| DRAWN BY: D. ROVANG | DATE DRAWN: 12-12-08 |
| DWG NUMBER: 5103604 | SCALE: 1:32 |
| REV: REV BY: DATE: | SHEET: 1 OF 1 |

**City Commission Regular Meeting** **11.d.**

**Meeting Date:** 01/02/2018

**Re:** Blanket Purchase Orders for Fiscal Year 2018

**Submitted For:** Danny Visconti, Golf Course Manager, Indian Hills Golf Course

---

**SUBJECT:**

Approval of blanket purchase orders for Indian Hills Golf Course in the total amount of $121,000.00.

**SUMMARY:**

Blanket purchase orders are necessary to purchase equipment and supplies throughout the year which is within the budget.

**RECOMMENDATION:**

Approve request.

**ALTERNATIVES:**

Deny or revise request.

**RESPONSIBLE STAFF:**

Danny Visconti, Golf Course Manager

**COORDINATED WITH:**

Finance Department

---

## Fiscal Impact

**Budgeted Y/N:** y

**Fiscal Year:** 2018

**Account:** varies

**Amount:** 121,000.00

**FISCAL IMPACT:**

405-4501-572-4935 in the amount of 31,000.00 - Acushnet Company (Titleist/Footjoy)
405-4501-572-4935 in the amount of 20,000.00 - Callaway Golf
405-4502-572-5210 in the amount of 45,000.00 - Palmdale Oil
405-4503-572-4930 in the amount of 25,000.00 - Sysco Corporation

---

## Attachments

Detailed List

---

## Form Review

| Inbox | Reviewed By | Date |
|---|---|---|

| | | |
|---|---|---|
| Finance Department | Karen Logue | 12/06/2017 06:58 PM |
| Finance Department | Johnna Morris | 12/22/2017 03:12 PM |
| City Manager | Nick Mimms | 12/22/2017 04:59 PM |

Form Started By: Linda Cox Started On: 12/04/2017 04:42 PM

Final Approval Date: 12/22/2017

**Indian Hills Golf Course**

**FY 2018**

**Blanket P.O. List over $10,000.00**

| | | |
|---|---|---|
| **Acushnet Company- Titleist/Footjoy** | Fairhaven, MA. | $31,000.00 |
| Gloves and golf balls for resale in the Golf Shop. | 405-4501-572-4935 | |
| **Callaway Golf** | Carlsbad, CA. | $20,000.00 |
| Clubs, gloves and golf balls for resale in the Golf Shop. | Same | |
| **Palmdale Oil** | Ft. Pierce, FL. | $45,000.00 |
| Gas and oil for Golf Cars | 405-4502-572-5210 | |
| **Sysco Corporation** | Riviera Beach, FL. | $25,000.00 |
| Paper supplies and food for resale at the Golf Course. | 405-4503-572-4930 | |
| | Total | $121,000.00 |

**City Commission Regular Meeting** **12.a.**

**Meeting Date:** 01/02/2018

**Re:** Ordinance 17-029 - Amending Sec. 15-7 - Permitted Signs

**Submitted For:** Peggy Arraiz, Code Compliance Manager, Code Enforcement

---

**SUBJECT:**

Legislative Hearing - Ordinance No. 17-029 amending Chapter 15 - Signs and Billboards. SECOND READING

**SUMMARY:**

On June 19, 2017, the City of Fort Pierce Commission adopted Ordinance 17-019 for the purpose of amending Chapter 15 - Signs and Billbords. Sec. 15-7 of the ordinance provided specific size restrictions for temporary signs based upon their zoning district. Due to the wide range of lot sizes throughout the R4, R4A and R5 zones, two size regulations are necessary based upon lot size.

**RECOMMENDATION:**

Staff recommends allowing signs up to 32 square feet on lots of 1 acre or more. Lots under 1 acre in size are restricted to signs up to 8 square feet.

**ALTERNATIVES:**

Amend staff's recommendation.
Deny staff's recommendation.

**RESPONSIBLE STAFF:**

Margaret M. Arraiz, Code Compliance Manager

**COORDINATED WITH:**

Rebecca Grohall, Planning Director

---

## Fiscal Impact

**OTHER INFORMATION:**

None

---

## Attachments

17-029 Revised

R4, R4A, & R5 Zoning Districts

Parcels 1+ Acre (R4, R4A, R5)

---

## Form Review

| Inbox | Reviewed By | Date |
|---|---|---|
| City Manager | Nick Mimms | 12/12/2017 11:59 AM |

Form Started By: Peggy Arraiz Started On: 10/09/2017 08:38 AM
Final Approval Date: 12/19/2017

**ORDINANCE NO. 17-029**

AN ORDINANCE OF THE CITY COMMISSION OF THE CITY OF FORT PIERCE, FLORIDA AMENDING THE PROVISIONS OF FORT PIERCE CODE OF ORDINANCES **CHAPTER 15 – SIGNS AND BILLBOARDS, SEC 1 DEFINITIONS** BY AMENDING THE DEFINITION OF A MURAL AND **SEC. 15-7 PERMITTED SIGNS** BY ESTABLISHING SIGN SIZES FOR R4, R4A AND R5 ZONING DISTRICTS; PROVIDING FOR A SEVERABILITY CLAUSE; REPEALING ALL ORDINANCES OR PARTS THEREOF IN CONFLICT HEREWITH; AND PROVIDING FOR AN EFFECTIVE DATE.

**WHEREAS** on June 19, 2017, the City of Fort Pierce Commission adopted Ordinance 17-019 for the purpose of amending Chapter 15 - Signs; and

**WHEREAS** Ordinance 17-019 provides size restrictions for temporary signs determined by the zone district in which the sign is located; and

**WHEREAS** due to the variation of lot sizes throughout the R4, R4A and R5 residential zones, two sign size specifications are established based upon the size of the parcel.

**NOW THEREFORE, BE IT ORDAINED** by the City Commission of the City of Fort Pierce, Florida:

**SECTION 1.** Chapter 15 – Signs and Billboards, Sec. 15-1 – Definitions of the Code of Ordinances of the City of Fort Pierce, Florida, is hereby amended so that the same shall read thereinafter as follows:

**Chapter 15 - SIGNS AND BILLBOARDS**

**Sec. 15-1. - Definitions.**

The following definitions shall apply in this chapter:

*"A" frame or sandwich sign:* A portable upright, rigid supporting sign in the form of a triangle or an inverted V.

*Advertising structure:* A sign or sign structure erected or intended for advertising purposes, with or without advertisement displayed thereon, situated upon or attached to real estate, upon which any poster, bill, printing, painting or device is fastened, affixed or displayed.

*Animated sign:* A sign which depicts action or motion or which changes color. An animated sign differs from a flashing sign in that it uses movement to create a special effect or scene, rather than as an attention-getting technique.

*Banner sign:* A sign made of cloth, fabric, paper, nonrigid plastic or similar type of material.

*Billboard:* (See off-premises sign.)

*Completely obliterated:* Not only complete removal of old signage such that it will not be visible, but also that restoration of the wall area upon which the signage was affixed shall be in the same color, and of the same texture, and materials as the rest of the wall.

*Construction project sign:* A temporary sign identifying an active construction project.

*Directional sign:*

(1) A sign erected by an official government agency to denote the name of any thoroughfare; to point out the route to any city, educational institution, public building, historic place or hospital; to direct and regulate traffic; and to denote any railroad crossing, bridge or other transportation facility for the convenience and safety of the general public.

(2) A sign giving directions or information about an establishment without advertising except that business logos are permitted. Such name and/or logo shall not exceed fifty (50) per cent of sign area. Directional signs may be used to identify entrances, exits, parking areas, clearances, standpipes, business hours, restrictions and traffic directions and order boards.

*Facade:* (See wall face.)

*Flag of the United States of America:* Often referred to as the American flag, it consists of thirteen (13) equal horizontal stripes of red (top and bottom) alternating with white, with a blue rectangle in the canton (referred to specifically as the "union") bearing fifty (50) small, white, five-pointed stars arranged in nine (9) offset horizontal rows, where rows of six (6) stars (top and bottom) alternate with rows of five (5) stars.

*Flag—All other:* A piece of cloth or similar material, typically oblong or square, attachable by one edge to a pole or rope and used as the symbol or emblem of a country or institution or as a decoration during public festivities.

*Flashing sign:* Any sign which contains a continually intermittent or sequential flashing light source.

*Ground sign:* A sign affixed to the ground, either flush or on poles, and not attached to any building for support, which may include a reader board (also called a detached, pole or freestanding sign).

*Group of establishments:* Two (2) or more commercial, industrial or public establishments that share common frontage, access points, off-street parking, loading and identity containing one or more structures approved as a single development.

*Illuminated sign:* Any sign designed to emit artificial light or designed to reflect light from one or more sources of artificial light.

*Interchange of copy:* The change or replacement of lettering on a sign without the replacement of the sign face itself.

*Main street:* An abutting public right-of-way which has the greatest vehicular design capacity or current traffic volume relative to all other abutting public rights-of-way.

*Marquee:* Any hood, awning or canopy of permanent construction which projects from the wall face of a building.

*Marquee sign:* A sign which is attached to a marquee.

*Message sign:* An electronically changeable sign upon which graphic displays, symbols or words can be varied upon the face or faces of the sign by a computer controller.

*Mural:* A painting or artistic work composed of graphics, photographs or arrangements of color, that displays a non-commercial message and is painted on the ~~side~~ walls of a building or similar rigid surface. This definition includes any painting, regardless of content, when the painting is done by a paid or unpaid artist and the artist; or when the painting is done by any other person(s) or entity without compensation.

*Obscene:* The status of material which the average person, applying contemporary community standards, would find, taken as a whole, appeals to the prurient interest, or depicts or describes, in a patently offensive way, sexual conduct, or taken as a whole lacks serious literary, artistic, political or scientific value.

*Off-premises sign:* Any sign which advertises a use, establishment, product or service that is sold, produced, manufactured or furnished at a place other than on the property on which said sign is located. (Also called an outdoor advertising sign or billboard.)

*On-premises sign:* A sign which advertises or directs attention to a use or establishment located on-premises or a product or service available on-premises.

*Out parcel:* A parcel of property containing a single structure with one tenant located within a group of establishments which may be separately owned or leased from the owner of the group of establishments.

*Parapet:* A false front or wall extension above the roof line.

*Pedestrian sign:* A sign which is attached to the underside of a cantilevered roof, portico or overhang that extends from the wall face of an establishment or use and covers a pedestrian passageway.

*Pennant:* Any relatively long, tapering flag or banner.

*Pole banner:* A banner that is attached to and displayed upon an upright pole or staff; also called a vertical banner or feather banner.

*Portable sign:* A moveable sign not secured or permanently attached to the ground. (Also a trailer, "A" frame or sandwich sign.)

*Projecting sign:* A sign which is affixed to and extends from the outside wall or facade of a building.

*Reader board:* A sign upon which copy is manually changed periodically to advertise special sales or to otherwise convey a message to the public.

*Roof sign:* Any sign erected over or on the roof of a building.

*Sign:* Any exterior identification, description, illustration or device which directs attention to a product, service, place, activity, person, establishment, institution or business; or any emblem, painting, banner, pennant, placard or temporary sign designed to advertise, identify or convey information.

*Sign areas:*

(1) *Ground and projecting signs:* The entire area within and enclosed by the exterior perimeter of all cabinets or modules within a single, continuous geometric figure, including but not limited to, all written copy, logos, symbols, decorative embellishments and border or roof treatments. This shall include all open areas within said perimeters and all space separating said cabinets or modules. Only one face (the largest) of any multiple-faced sign shall be counted in calculating sign area.
(2) *Wall signs:* The entire area within a single continuous perimeter composed of squares, rectangles or other geometric figures which enclose the extreme limits of all sign elements affixed to the wall, including but not limited to, cabinet structures, written copy, logos, symbols and illustrations.

*Sign face:* The part of a sign that is or may be used for advertising purposes.

*Sign structure:* All the interrelated parts and materials, such as beams, poles, and mounts, which are constructed for the purpose of supporting or displaying a message or informative content.

*Special event sign:* A sign which calls attention to activities of a temporary nature.

*Temporary sign:* A sign which advertises, for a limited period of time, issues including but not limited to political candidates, parties or issues; active construction projects and proposed development projects; real estate for sale, rent or lease; business grand openings, sales events or other types of special events that do not require a special event permit under section 12-301.

*Trailer sign:* An advertising structure mounted on skids, wheel or wheels, constructed for the sole purpose of advertising, licensed or unlicensed.

*Vehicular sign:* A sign affixed to a vehicle or trailer for the purpose of advertising. For the purposes of this chapter, such signs shall only be applicable when said vehicle or trailer is temporarily or permanently located on a parcel for the primary purpose of conveying a business message.

*Wall face:* The entire building front, including the parapet.

*Wall sign:* A sign erected parallel to the outside wall facade of any building including flat, painted, individual letter or cabinet signs. Mansard and marquee signs shall conform to wall sign provisions.

*Window sign:* A sign which is painted on or displayed within a storefront window or door.

**SECTION 2.** Chapter 15 – Signs and Billboards, Sec. 15-7 – Permitted Signs of the Code of Ordinances of the City of Fort Pierce, Florida, is hereby amended so that the same shall read thereinafter as follows:

Sec. 15-7. - Permitted signs.

The following types and sizes of signs or advertising structures shall be permitted within the following zoning districts:

(1) *Single-family residential zoning districts (E-1,E-2, E-3 R-1, R-2 and R-3).*

a. *Semi-restricted uses.* Temporary signs that comply with Sec. 15-6(d) and that do not to exceed eight (8) square feet and one non-illuminated–wall sign per individual dwelling unit, which shall not exceed one square foot in sign area.

b. *Conditional uses.* Types and sizes of signs or advertising structures as permitted by section 15-8(3) in an office commercial zoning district, except that ground signs shall not exceed eighteen (18) square feet in sign area.

(2) *Multi-family residential zoning districts (R-4, R-4A and R-5).*

a. *Semi-restricted uses:*

1. Temporary signs that comply with Sec. 15-6(d) and that do not to exceed thirty-two (32) square feet on lots of one (1) acre or more, or eight (8) square feet on all other parcels; and one non-illuminated wall sign per individual dwelling unit, which shall not exceed one square foot in sign area.

2. One non-illuminated wall or ground sign per entrance of a permitted principal building or use, which shall not exceed eighteen (18) square feet in sign area. Ground signs shall not exceed six (6) feet in height.

3. Non-illuminated directional signs, which shall not exceed six (6) square feet in sign area, may be installed as needed with the approval of the director in accordance with section 15-9.

b. *Conditional Uses.* Types and sizes of signs or advertising structures as permitted by section 15-8(4) in limited commercial zoning districts except that ground signs shall not exceed thirty-two (32) square feet in sign area.

(3) *Office commercial and Edgartown Settlement zoning districts (C-1, ES).*

a. *Semi-restricted uses.*

1. Temporary signs that comply with Sec. 15-6(d) and that do not to exceed thirty-two (32) square feet. Temporary signs must be placed a minimum of twenty-five feet (25') apart and one wall sign per tenant or occupant which shall not exceed two (2) square feet in sign area.

2. One wall sign per building, which shall not exceed twenty-four (24) square feet in sign area.

3. Any establishment, or group of establishments, which has main street lot frontage of sixty (60) linear feet or more, shall also be permitted one ground sign, which shall not exceed forty-eight (48) square feet in sign area and six (6) feet in height.

4. Directional signs, which shall not exceed six (6) square feet in sign area may be installed as needed with the approval of the director in accordance with section 15-9.

b. *Conditional uses.* Types and sizes of signs or advertising structures as permitted by section 15-8(4) in limited commercial zoning districts unless restricted by the city commission when the conditional use is approved.

(4) *Limited commercial and Open Space / Recreational zoning districts (C-2, C-5, C-6, OS-1, OS-2, A-1 and A-2).*

a. *Semi-restricted uses.*

1. One wall sign or one projecting sign per tenant, which shall not exceed a sign area equal to twenty (20) per cent of the total wall face area fronting on the main street.

2. Any establishment, or group of establishments, which has a main street lot frontage of sixty (60) linear feet or more, shall also be permitted one ground sign. Such sign shall not exceed a sign area equal to one square foot for every three (3) linear feet of main street of lot frontage, up to a maximum of two hundred (200) feet. Structures on out parcels with a single tenant having sixty (60) feet of frontage or more shall also be permitted a separate ground sign subject to the restrictions above. The out parcel frontage shall not be subtracted in calculating the frontage for the group of establishments.

3. One pedestrian sign per tenant, which shall not exceed six (6) square feet in sign area.

4. One rear entrance wall sign per tenant which shall not exceed six (6) square feet in sign area.

5. Window signs per tenant, which shall not exceed twenty-five (25) per cent of such open window display area.

6. Directional signs, which shall not exceed six (6) square feet each in sign area, may be installed as needed with the approval of the director in accordance with section 15-9.

7. Temporary signs that comply with Sec. 15-6(d) and that do not to exceed thirty-two (32) square feet. Temporary signs must be placed a minimum of twenty-five feet (25') apart.

b. *Conditional uses.* Same as semi-restricted uses.

(5) *General commercial and industrial zoning districts (C-3, C-4, CP, I-1, I-2, and I-3).*

a. *Semi-restricted uses.*

1. Off-premises signs.

2. One wall sign or one projecting sign per tenant, which shall not exceed a sign area equal to twenty (20) per cent of the total wall face area fronting on the main street.

3. Any establishment, or group of establishments, which has a main street lot frontage of sixty (60) linear feet or more, shall also be permitted one ground sign. Such sign shall not exceed a sign area equal to one square foot for every three (3) linear feet of main street of lot frontage, up to a maximum of two hundred (200) square feet except that one additional ground sign shall be permitted when the main street lot frontage exceeds five hundred (500) feet. The second ground sign shall not exceed a sign area equal to one square foot for every three (3) linear feet of main street lot frontage in excess of the first five hundred (500) feet of frontage, up to a maximum of two hundred (200) square feet. Structures on out parcels with a single tenant having sixty (60) feet of frontage or more shall also be permitted a separate ground sign subject to the restrictions above. The out parcel frontage shall not be subtracted in calculating the frontage for the group of establishments.

4. One pedestrian sign per tenant, which shall not exceed six (6) square feet in sign area.

5. One rear entrance wall sign per tenant, which shall not exceed six (6) square feet in sign area.

6. Window display signs per tenant, which shall not exceed twenty-five (25) per cent of such open window area.

7. Directional signs, which shall not exceed six (6) square feet in sign area, may be installed as needed.

8. Temporary signs that comply with Sec. 15-6(d) and that do not to exceed thirty-two (32) square feet. Temporary signs must be placed a minimum of twenty-five feet (25') apart.

b. *Conditional uses.* Same as semi-restricted uses.

(6) *Planned development and planned unit redevelopment zoning district (PD or PUR).* Except for temporary signs that comply with Sec. 15-6(d) and that do not exceed thirty-two (32) square feet, the types and sizes of signs and advertising structures permitted shall be determined by the city commission as part of the final development or redevelopment plan except that in no instance may the permitted signage exceed that permitted by section 15-8(5)(a)2, 3, 4, 5, 6, 7 and 15-8(5)(b).

(7) *I-95 and turnpike interchange district.*

a. *Area defined.* The area subject to this section shall include all commercial and industrial lots or parts thereof located within:

- One half mile of where I-95 N intersects with State Road 70; or
- One half mile of the commencement of the southbound turnpike off ramp; or
- Extends a half mile both north and south of State Road 70 between the two interchanges.

b. *Ground sign standards.* Any establishment or group of establishments, which has a main street frontage of sixty (60) linear feet or more, located on a lot which lies in whole or in part in the district provided for by this section, shall be permitted one ground sign. Such sign shall not exceed a sign area equal to one square foot for every three (3) linear feet of main street frontage, up to a maximum of three hundred (300) square feet. The maximum height shall be sixty-five (65) feet.

c. *Other standards.* Additional signs in this district shall conform with regulations and standards provided by this chapter or the appropriate zoning category.

**SECTION 3.** The provisions of this Ordinance are declared to be severable and if any section, sentence, clause, or phrase of this Ordinance shall, for any reason, be held to be invalid or unconstitutional, such decision shall not affect the validity of the remaining sections, sentences, clauses, and phrases of this Ordinance but shall remain in effect, it being the legislative intent that this Ordinance shall stand notwithstanding the invalidity of any part.

**SECTION 4.** All Ordinances or parts of Ordinances in conflict herewith are and the same shall be repealed and shall be of no further force or effect whatsoever.

**SECTION 5.** This Ordinance is and the same shall become effective immediately upon final passage hereof.

APPROVED AS TO FORM
AND CORRECTNESS:

_____

James M. Messer, Esquire
City Attorney

STATE OF FLORIDA)
ST. LUCIE COUNTY)SS

**WE, THE UNDERSIGNED**, Mayor Commissioner and the City Clerk of the City of Fort Pierce, Florida, do hereby certify that the foregoing and above Ordinance No.17-029 was duly advertised by title only in the St. Lucie News Tribune on December 8, 2017; copy of said Ordinance was made available at the office of the City Clerk to the public upon request; said Ordinance was duly introduced, read by title only, and passed on first reading by the City Commission of the City of Fort Pierce, Florida, on December 18, 2017; and was duly introduced, read by title only, and passed on second and final reading January 2, 2018 by the City Commission of the City of Fort Pierce, Florida.

**IN WITNESS HEREWITH**, we hereunto set our hands and affix the Official Seal of the City of Fort Pierce, Florida, this 2nd day of January, 2018.

_____

Linda Hudson,
Mayor Commissioner

**ATTEST:**

_____

Linda W. Cox,
City Clerk

**(City Seal)**

# R4, R4A, & R5 Zoning Districts

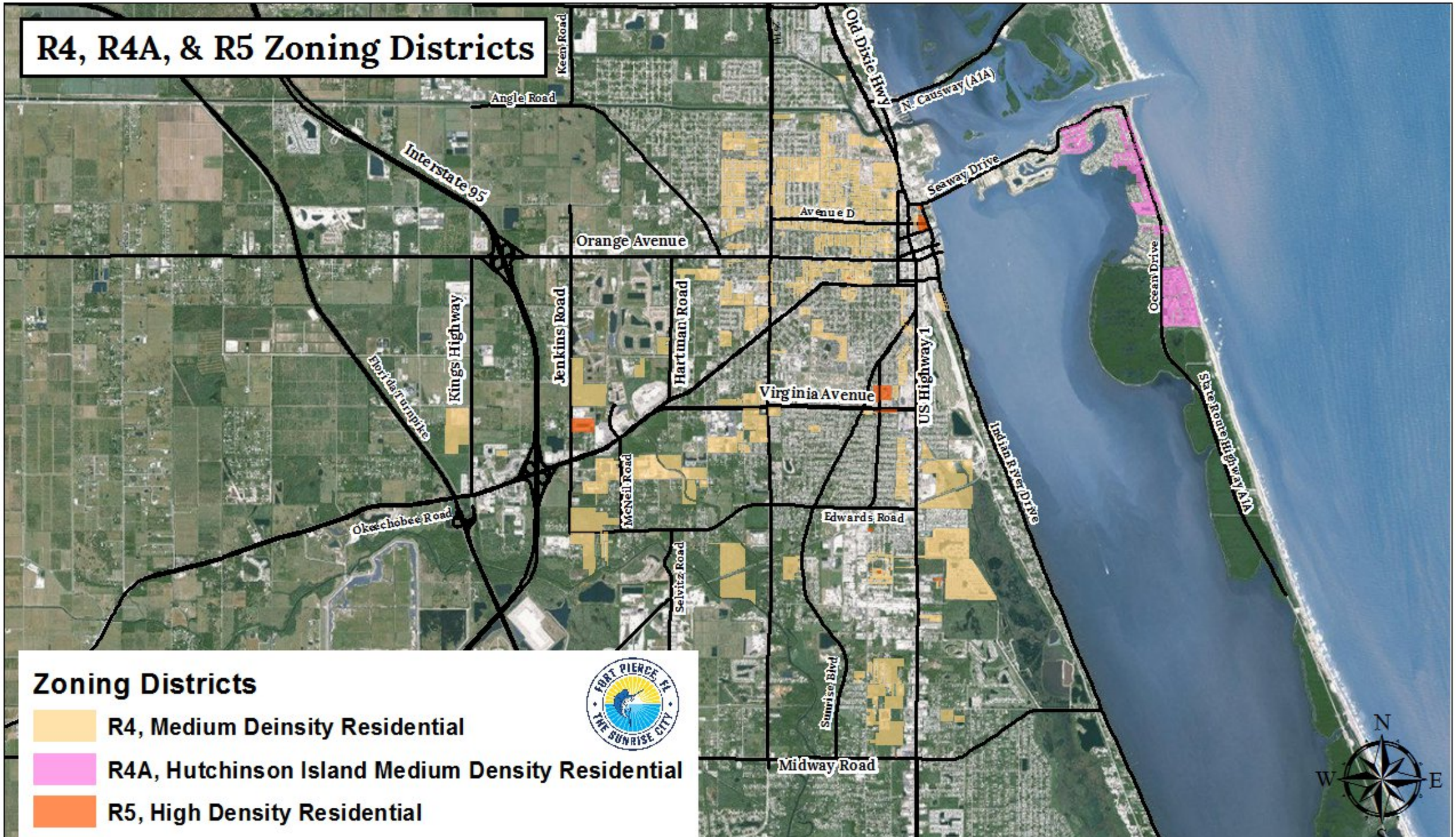

# R4, R4A, & R5 Zoning Districts

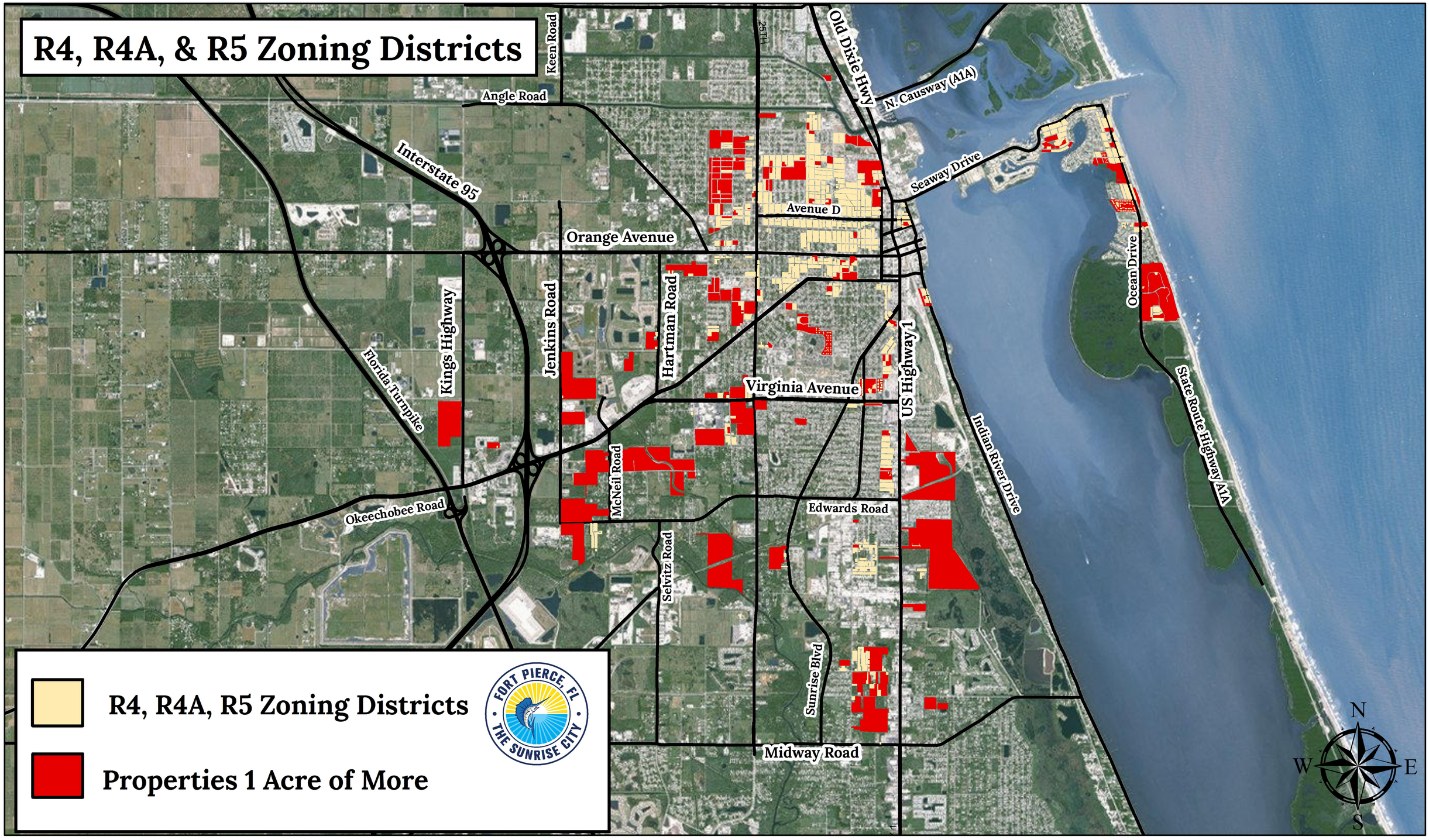

**City Commission Regular Meeting** **12.b.**

**Meeting Date:** 01/02/2018

**Re:** Animal Control Ordinance update

**Submitted For:** Peggy Arraiz, Code Compliance Manager, Code Enforcement

---

**SUBJECT:**

Legislative Hearing - Ordinance No. 17-039 Amending Chapter 4 - Animals to resolve issues identified by staff during the first year of enforcement efforts regarding tethering. SECOND READING

**SUMMARY:**

An ordinance amendment to resolve issues identified by staff during the first year of enforcement efforts regarding tethering.

- Provides a definition for "responsible person".
- Specifically requires a responsible person to be outside and in view of the animal whenever it is tethered.
- Amends the penalty from $50.00 to $100.00.

**RECOMMENDATION:**

Approve the ordinance as presented.

**ALTERNATIVES:**

Make additional amendments to the ordinance.
Deny the recommended amendments and maintain current ordinance.

**RESPONSIBLE STAFF:**

Margaret M. Arraiz, Code Compliance Manager

**COORDINATED WITH:**

Iola Mosely, Assistant City Attorney

---

## Fiscal Impact

**OTHER INFORMATION:**

None

---

## Attachments

17-039

---

## Form Review

| Inbox | Reviewed By | Date |
|---|---|---|
| City Manager | Nick Mimms | 12/12/2017 11:59 AM |
| Form Started By: Peggy Arraiz | | Started On: 12/06/2017 01:17 PM |

Final Approval Date: 12/19/2017

**ORDINANCE 17-039**

AN ORDINANCE AMENDING THE CODE OF ORDINANCES OF THE CITY OF FORT PIERCE, FLORIDA; **CHAPTER 4 – ANIMALS**; AMENDING **ARTICLE I** – GENERAL; **SEC. 4-1** – DEFINITIONS, AMENDING **ARTICLE II** – ANIMAL CONTROL; **SEC. 4-22** – RESTRAINT OF ANIMALS, GENERALLY; PROVIDING FOR A SEVERABILITY CLAUSE; AND REPEALING ORDINANCES OR PARTS THEREOF IN CONFLICT HEREWITH; AND PROVIDING FOR AN EFFECTIVE DATE.

**WHEREAS**, Chapter 4 of the Code of Ordinances of the City of Fort Pierce, Florida provides for the regulation and control of animals within the city limits; and

**WHEREAS**, on August 15, 2016, the City Commission of the City of Fort Pierce, in recognition that the keeping of dogs outdoors without proper shelter, food or water and in extreme weather conditions constitutes animal cruelty and neglect, adopted Ordinance No. 16-015 to establish regulations for the tethering of dogs; and

**WHEREAS**, periodic amendments to the Code of Ordinances are necessary to address deficiencies identified during the enforcement of the ordinance; and

**WHEREAS**, it has been shown that dogs suffering from cruelty and neglect often become aggressive, posing a threat to the health and safety of the local community; and

**NOW THEREFORE, BE IT ORDAINED** by the City Commission of the City of Fort Pierce, Florida:

**SECTION 1**. Chapter 4, Article I, Section 4-1 of the Code of Ordinances of the City of Fort Pierce, Florida, is hereby amended so that the same shall read thereinafter as follows:

Sec. 4-1 Definitions.

As used in this chapter, the following terms shall have the indicated meaning.

*Animal*. Any non-speaking, live, vertebrate creature, domestic or wild.

*Animal control officer*. Any person employed or appointed by the city who is authorized to investigate, on public or private property, civil infractions relating to animal control or cruelty, licensure of animals, or seizure and impoundment of animals and to issue citations as provided in this article.

*Animal shelter*. Any facility operated by a humane society or municipal agency or its authorized agents for the purpose of impounding or caring for animals held under the authority of this chapter or state law.

*At large*. Any animal which is off the premises of its owner or keeper and not under the restraint of its owner or keeper.

*Attack*. An event whereby an unprovoked animal lunges at, runs after or otherwise chases or approaches a person or other animal and such event either occurs in a threatening or menacing manner or causes some type of injury.

*Bird or Fowl*. Any member of the avian species, regardless of sex.

*Bite*. An actual puncture or tear of the skin inflicted by the teeth of an animal.

*Breeder*. Any person who owns, keeps, harbors, maintains, or has custody of dogs or cats that produce any litter or offspring that are offered for sale, or that produce a combined total of two or more litters during a twelve month period.

*Cat*. Any feline, regardless of sex.

*Citation*. A written notice, issued to any person by an officer, that the officer has probable cause to believe that the person has committed a civil infraction in violation of a duly enacted ordinance and that the county court will hear the charge. Pursuant to F.S. § 828.27, the citation shall contain:

(1) The date and time of issuance.

(2) The name and address of the person.

(3) The date and time the civil infraction was committed.

(4) The facts constituting probable cause.

(5) The ordinance violated.

(6) The name and authority of the officer.

(7) The procedure for the person to follow in order to pay the civil penalty, to contest the citation, or to appear in court.

(8) The applicable civil penalty if the person elects to contest the citation.

(9) The applicable civil penalty if the person elects not to contest the citation.

(10) A conspicuous statement that if the person fails to pay the civil penalty within the time allowed, or fails to appear in court to contest the citation, the person shall be deemed to have waived his or her right to contest the citation and that, in such case, judgment may be entered against the person for an amount up to the maximum civil penalty.

*Confined*. Physically preventing an animal from leaving the premises of its owner or keeper. Control. The possession, ownership, care and custody of animals.

*Controlled burial*. Burying at least two (2) feet below the surface of the ground and one hundred (100) feet from any water well.

*Cruelty*. Any act of neglect, torture or torment that causes the unjustifiable pain or suffering of an animal.

*Dangerous dog*. Any dog that according to the records of the appropriate authority:

(1) Has aggressively bitten, attacked, or endangered or has inflicted severe injury of a human being on public or private property;

(2) Has more than once severely injured or killed a domestic animal while off the owner's property; or

(3) Has, when unprovoked, chased or approached a person upon the streets, sidewalks, or any public grounds in a menacing fashion or apparent attitude of attack, provided that such actions are attested to in a sworn statement by one or more persons and dutifully investigated by the division. Dog. Any animal of the canine species, regardless of sex.

*Domestic animal*. Dogs, cats, or other animals that are kept primarily as pets for pleasure rather than utility and that do not require a special permit by the Florida Fish and Wildlife Conservation Commission.

*Exposed to rabies*. A person, dog, cat or other animal that has been bitten by, or been exposed to, any animal known to have been infected with rabies.

*Extreme weather*. for the purposes of this chapter shall include but not be limited to the following conditions:

(1) Hurricane;

(2) Tropical storm;

(3) Above 85 degrees Fahrenheit with a heat index of 100 degrees heat index; or

(4) Below 40 degrees Fahrenheit with a 35 degrees wind chill factor.

In determining whether extreme weather conditions exist, an animal control officer shall consider extenuating circumstances that provide for the safety of the animal through other means.

*Feral*. Any dog or cat exiting in a wild or untamed state, or any dog or cat that has returned to an untamed state from domestication.

*Harbor*. The act of keeping and caring for an animal or providing premises to which the animal returns for food, shelter, or care for five consecutive days. This shall not include those circumstances wherein an individual temporarily captures or holds a stray animal and immediately returns the animal to its owner or an animal control officer.

*Hunt or hunting*. To follow, search, or pursue any animal or the use of structures or tree stands for the purpose of capturing or killing either for food or in sport, or the use of any animal or hunting falcon for this purpose.

*Impoundment*. The taking of or picking up of and confinement of an animal by an officer under the provisions of this article.

*Leash or lead*. A cord, rope, chain or similar device which holds an animal under restraint and is not more than six (6) feet in length.

*Livestock*. Horses, mules, donkeys, cattle, calves, sheep, goats, pigs, hogs or any other grazing animal.

*Microchip*. A small chip implanted under an animal's skin that transmits an identification number to an electronic scanner, which provides pet ownership data through cross reference to microchip registry.

*Officer*. Any law enforcement officer defined in, F.S. § 943.10, or any animal control officer employed by the city.

*Ordinance*. Any ordinance relating to the care, custody, control of or cruelty to animals enacted by the city, the violation of which is a civil infraction.

*Owner*. Any person, partnership, corporation or entity possessing, owning, keeping, caring for, or harboring one or more animals including any custodian or other person in charge of an animal.

*Proper enclosure of a dangerous dog*. While on the owner's property, a dangerous dog is securely confined indoors or in a securely enclosed and locked pen or structure, suitable to prevent the entry of young children and designed to prevent the animal from escaping. Such pen or structure shall have secure sides and a secure top to prevent the dog from escaping over, under, or through the structure and shall also provide protection from the elements.

*Public nuisance*.

(1) Any animal which:

a. Attacks passersby or passing vehicles without provocation;

b. Attacks other animals;

c. Is repeatedly at large and not under restraint;

d. Trespasses on school grounds;

e. Damages private or public property;

f. Repetitively barks, whines, howls, chirps, caws, or whistles for a period of five (5) minutes or more so as to disturb adjacent residents; or

g. Causes an annoyance in the neighborhood by acts such as overturning garbage cans, defecating, digging holes on other than its owner's property, or such other acts as are generally regarded to create an annoyance.

(2) Any activity, such as, but not limited to, the feeding of wild animals or fowl, which:

a. Causes the fouling of the air by odor and thereby creates unreasonable annoyance or discomfort to those in close proximity to the premises where the animals or fowl congregate; or

b. Causes a sanitary nuisance as defined in F.S. § 386.01.

(3) The keeping of any wild animal in violation of the provisions of F.S. Ch. 372 and regulations promulgated by the Florida Game and Fresh Water Fish Commission.

*Quarantine*. A strict confinement, isolation and observation imposed on animal(s) suspected of having rabies or any other infectious zoonotic disease, or premises or other defined geographic areas, to prevent the spread of disease or pests.

*Responsible Person*. A responsible person is an individual who is at least fifteen (15) years of age or older who my provide temporary supervision or care for an animal as permitted by the owner of the animal. A responsible person as described herein may be the owner, or may be a person who is not the owner but has been permitted by the owner to provide temporary supervision or care.

*Severe injury*. Any physical injury that results in broken bones, multiple bites, or disfiguring lacerations requiring sutures or reconstructive surgery.

*Sterilized*. Rendered permanently incapable of reproduction.

*Tease*. To intentionally disturb, provoke, interfere with, or annoy any animal.

*Tether*. To tie or otherwise attach an animal to a stake, pole, tree, or other stationary object without providing direct control and supervision of the animal.

*Under restraint*. Any animal confined within the premises of its owner or keeper, or under immediate, continuous physical control, secured by a leash or lead.

*Unprovoked*. The victim what has been conducting himself or herself peacefully and lawfully has been bitten or changed in a menacing fashion or attacked by an animal.

*Unsterilized*. Any non-spayed or non-neutered animal.

*Vicious animal*. Any fierce or dangerous animal that constitutes a physical threat to human beings or other animals, or any animal for which the animal control officer has documentation to establish that the animal has bitten any person or other animal on two (2) separate occasions without provocation within a period of one year.

**SECTION 2**. Chapter 4, Article II, Section 4-22 of the Code of Ordinances of the City of Fort Pierce, Florida, is hereby amended so that the same shall read thereinafter as follows:

Sec. 4-22. - Restraint of animals; generally.

(a) Animals shall not be allowed outside the confines of their own homes without proper restraint except as provided in this section.

(1) Dogs, cats and small domestic animals shall not be kept outside in crates, whether metal, wood, plastic or other material.

(2) Dogs, cats and small domestic animals may be kept outside in a fenced enclosure if the enclosure contains a shelter which meets the following requirements:

(a) Is weatherproof and made of durable materials so as to provides adequate protection from the sun, wind and rain;

(b) Provides a solid floor. Wire, grid or slat floors of structures that permit the animal's feet to pass through openings, or sag under the animal's weight, or that otherwise do not protect the animal's feet or toes from injury are prohibited;

(c) Provides a solid roof;

(d) Contains clean and dry bedding material;

(e) Elevated a minimum of six inches from the ground and be free standing of water;

(f) Provides sufficient space for each animal to comfortably stand up, sit down, lie down and turn around in the shelter. If the shelter is used for more than one animal at the same time, it must provide enough space for each animal to comfortably stand up, sit down, lie down, and turn around simultaneously; and

(g) Provides ingress and egress for the animal to enter and exit the shelter at all times.

(h) Be kept in a clean and sanitary condition free from accumulated waste and debris.

(3) Any animal left unattended in an outdoor fenced enclosure shall be provided a minimum open space, excluding the shelter(s) within the enclosure, based upon the dog’s size as set forth below:

(a) Twenty pounds or less (small): Thirty-two square feet.

(b) Twenty-one pounds to Fifty pounds (medium): Sixty square feet.

(c) Over Fifty pounds (large): Eighty square feet.

(d) An additional Sixteen square feet is required for each additional dog.

(4) Sufficient food and water shall be provided at all times daily, including weekend and holidays.

(5) No animal shall be tethered unless all of the following provisions are met:

(a) A responsible person must be outside and within view of the animal must be in view of the person responsible for the animal at all times while tethered.

(b) Animals younger than six months old, older than seven years, or ill shall not be tethered.

(c) The length and weight of the tether shall be appropriate for the animal breed and shall be a minimum of ten feet long or four times the length of the animal (measured from tip of nose to base of tail), whichever is greater.

(d) The tether must have swivels at both ends of the rope, chain or similar restraint for holding an animal in place, allowing a short radius in which it can move about and not become tangled.

(e) Prong, choke or chain collars are prohibited in the use of tethering animal.

(f) Area which the animal may reach while tethered shall be free of entanglements.

(g) The length and location of the tether must not allow the animal to reach a fence or neighboring property.

(h) Collar weight shall be appropriate for the animal as determined by a reasonable person.

(i) A trolley system is permitted.

(j) An animal may not be tethered in extreme weather, including but not limited to hurricanes, tropical storms or tornados.

(k) The animal shall have access to a water, shade and a dry and raised area at all times.

(6) Any enclosed area where a dog is confined shall be kept free of objects that may injure the dog and shall be cleaned regularly to remove feces.

(7) Dogs on residentially zoned property shall not be maintained outdoors during periods of extreme weather.

(b) It shall be unlawful for any operator of a motor vehicle to allow an animal to ride in any unenclosed section of the vehicle without enclosing the animal in a cage that is secured to the vehicle or securing the animal with a restraint device that will not permit the animal to reach the outside perimeter of the vehicle.

(c) A violation of this section shall constitute a Class ~~A~~ B civil infraction, punishable as provided within this chapter.

**SECTION 3**. The provisions of this Ordinance are declared to be severable and if any section, sentence, clause, or phrase of this Ordinance shall, for any reason, be held to be invalid or unconstitutional, such decision shall not affect the validity of the remaining sections, sentences, clauses, and phrases of this Ordinance but shall remain in effect, it being the legislative intent that this Ordinance shall stand notwithstanding the invalidity of any part.

**SECTION 4**. All Ordinances or parts of Ordinances in conflict herewith are and the same shall be repealed and shall be of no further force or effect whatsoever.

**SECTION 5**. This Ordinance is and the same shall become effective immediately upon final passage hereof.

APPROVED AS TO FORM
& CORRECTNESS:

_____

James M. Messer
City Attorney

STATE OF FLORIDA )
ST. LUCIE COUNTY )SS

WE, THE UNDERSIGNED, Mayor Commissioner and the City Clerk of the City of Fort Pierce, Florida, do hereby certify that the foregoing and above Ordinance No. 17-039 was duly advertised by title only in the St. Lucie News Tribune on December 8, 2017; copy of said ordinance was made available at the office of the City Clerk to the public upon request; said ordinance was duly introduced, read by title only, and passed on first reading by the City Commission of the City of Fort Pierce, Florida, on December 18, 2017; and was duly introduced, read by title only, and passed on second and final reading on January 2, 2018, by the City Commission of the City of Fort Pierce, Florida.

IN WITNESS HEREWITH, we hereunto set our hands and affix the Official Seal of the City of Fort Pierce, Florida, this 2nd day of January, 2018.

_____
Linda Hudson,
Mayor Commissioner

ATTEST:

_____
Linda W. Cox
City Clerk

(CITY SEAL)

**City Commission Regular Meeting** **12.c.**

**Meeting Date:** 01/02/2018

**Re:** Application for Subdivision: Dollar Tree & Future Subdivision at 4008 Okeechobee Road

**Submitted For:** Rebecca Grohall, Director, Planning & Zoning

---

**SUBJECT:**

Review and approval of an application for Final Plat (Minor Replat), submitted by Property Owner(s) Smigiel Partners XIX Ltd. and Representative, Jason M. Gunther, P.E., to subdivide a 3.17 acre tract of land into two (2) lots, located at 4008 Okeechobee Road, Fort Pierce, FL. The property is zoned General Commercial (C-3), Parcel IDs: 2417-332-0009-000-9 & 2417-333-0001-000-6.

**SUMMARY:**

- The applicant is requesting the approval of a Subdivision: Final Plat (Minor Replat), to combine and subdivide the subject parcels into a 1.67 acre site for Dollar Tree and retain a 1.31 acre parcel for future development.
- The City Commission at their January 3rd, 2017 meeting approved the Site Plan for development of the site designated as Lot 1 presented within the plat, for construction of the proposed 9,977 sq. ft. Dollar Tree retail store, support parking, lighting, landscaping, storm water, and pedestrian improvements. The subject development is engaged in building permit review.
- The presented Plat, encompasses the combination of two (2) parcels of land for subdivision into two (2) more equal parcels, providing for right-of-way dedication and reservation of shared access.
- The plat design provides for development of the approved Dollar Tree retail site and reservation of a parcel to the east for future development, as well as a shared access between said parcel and Moonswiner's the east.
- The Planning Board, at their December 12th, 2017 meeting, voted unanimously to recommend approval of the proposal.
- The Fort Pierce Engineering department is coordinating with Gregory S. Fleming, PSM, of NorthStar Geomatics, Inc. to complete the final inspections and certifications of the Plat prior to final action by the City Commission.

**RECOMMENDATION:**

1. The applicant complete the recommended housekeeping corrections referenced by the City Engineering Department and City's reviewing surveyor, prior to scheduling for City Commission review; and
2. The ingress/egress Easement is maintained, or appropriately adjusted during development review of Lot 2, to accommodate shared access with adjacent uses.
3. Approval with the condition that the applicant completes installation of, or filing of a surety for, the sidewalk connection along Hartman Road prior to recording of the Plat, in accordance with City Code Section 18-13.

**ALTERNATIVES:**

- Approval with alternative conditions
- Denial

**RESPONSIBLE STAFF:**

Kori Benton, Senior Planner

**COORDINATED WITH:**

Tracy Telle, Assistant City Engineer

---

## Fiscal Impact

**OTHER INFORMATION:**

Potential Increase in Ad-Valorem Tax Revenue based upon proposed infrastructure improvements and the completion of the approved Site Development Plan for the subject tract.

---

## Attachments

Staff Report

Application, Site Survey, & Supporting Documents

Proposed Plat

Aerial & Zoning Map

---

## Form Review

| Inbox | Reviewed By | Date |
|---|---|---|
| City Manager | Nick Mimms | 12/22/2017 04:59 PM |
| Form Started By: Kori Benton | | Started On: 12/20/2017 05:36 PM |
| Final Approval Date: 12/22/2017 | | |

THE SUNRISE CITY
FORT PIERCE
PLANNING DEPARTMENT
Florida

**TO:** Nicholas Mimms, PE, City Manager

**THROUGH:** Rebecca Grohall, AICP, Planning Director

**FROM:** Kori Benton, Senior Planner

**RE:** **Application for Subdivision**
**Dollar Tree & Future Development**
**4008 Okeechobee Road**

**DATE:** December 20, 2017

## STAFF REPORT

**Owner/Applicant:** Smigiel Partners XIX Ltd
PO Box 540669
Lake Worth, FL 33454

**Representative:** Jason M. Gunther, P.E.
Thomas Engineering Group
125 West Indiantown Road, Suite 206
Jupiter, FL 33458

**Requested Action:** Approval of a Subdivision, Final Plat (Minor Replat), to combine and subdivide the subject parcels into a 1.67 acre site for Dollar Tree and retain a 1.31 acre parcel for future development.

**Location:** 4008 Okeechobee Road

**Parcel IDs:** 2417-332-0009-000-9 & 2417-333-0001-000-6

**Current Zoning:** General Commercial (C-3)

**Future Land Use:** General Commercial (GC)

**Surrounding Zoning:**

| North | East | South | West |
|---|---|---|---|
| C-3 | C-3 | C-3 | C-3 |

**Site Size:** 3.17 acres

**Utilities:** Located within the FPUA Service Area

## Staff Analysis:

***Request***

The applicant is requesting the approval of a final plat (replat) for the proposed Dollar Tree at Okeechobee and Hartman Subdivision. The area is made up 3.17 acres and is located at 4008 Okeechobee Road, at the northeast corner of Okeechobee and Hartman Roads. The proposal entails the combination of two (2) parcels of land for subdivision into two (2) more equal parcels, providing for right-of-way dedication and reservation of shared access. The proposed parcel design provides for development of the approved Dollar Tree retail site and reservation of a parcel to the east for future development.

***Background & Project Summary***

Lot 1 presented within the plat will be site of the proposed 9,977 sq. ft. Dollar Tree retail store, support parking, lighting, landscaping, storm water, and pedestrian improvements. Adjacent to the proposed Dollar Tree is proposed Lot 2, allocating 1.31 acres to the east for future commercial development.

The plat encompasses dedication of right-of-way requested by St. Lucie County, and reservation for shared access between adjacent commercial sites pursuant to City Comprehensive Plan Objective 2.7 & Policy 2.7.2 which guides provision of cross access with adjacent properties.

*Traffic*

The traffic impact study provided by the applicant determined that a total of 422 additional daily trips will be generated by the Dollar Treet project. Of these trips, 38 AM peak hour and 68 PM peak hour trips will be dispersed onto the surrounding roadway network. With the completion of this facility, all of the surrounding roadway segments are expected to operate at their current adopted level of service (LOS) with the additional trips.

The traffic engineer for the project has presented that traffic projections for the Dollar Tree, and future development of the eastern parcel, do not warrant exclusive left or right turn lanes at either of the proposed site access driveways. Staff anticipates further review and analysis at the time of site plan application for the remaining east parcel to account for the future use, additional development, and the anticipated connection to Moonswiners BBQ.

**Technical Review Committee**

All affected departments have reviewed and conditionally approved the Plat based on compliance with the requirements of the City Code. The City Engineering Department and City's reviewing surveyor have requested minor housekeeping adjustments to the plat document.

**Planning Board**

The Planning Board, at their December 12th meeting, voted unanimously to recommend approval of the request.

**Staff Recommendation**:

The proposed Plat generally meets the requirements of the City Code and is found to be consistent with the City's Comprehensive Plan; therefore Staff recommends **approval** with the following conditions:

1. The applicant complete the recommended housekeeping corrections referenced by the City Engineering Department and City's reviewing surveyor, prior to scheduling for City Commission review; and

2. The ingress/egress Easement is maintained, or appropriately adjusted during development review of Lot 2, to accommodate shared access with adjacent uses.
3. Approval with the condition that the applicant completes installation of, or filing of a surety for, the sidewalk connection along Hartman Road prior to recording of the Plat, in accordance with City Code Section 18-13.

THE SUNRISE CITY
FORT PIERCE
PLANNING DEPARTMENT Florida

# Subdivision

Property address or Location 4008 Okeechobee Road

Parcel ID #(s) 2417-332-0009-000-9, 2417-333-0001-000-6

Project description Create 2 commercial parcels from the existing 2 folios.

---

| Smigiel Partners XIX Ltd | Thomas Engineering Group, LLC |
|---|---|
| **Property Owner(s)** | **Applicant/Representative, Title, Company** |
| Street Address<br>PO Box 540669 | Street Address<br>125 W. Indiantown Road, Suite 206 |
| City State Zip<br>Lake Worth, FL 33454 | City State Zip<br>Jupiter, FL 33458 |
| Phone Number | Phone Number<br>561-203-7503 |
| Email Address | Email Address<br>jgunther@thomaseg.com |

***Property Owner(s) Acknowledgements:*** *- This application will not be considered complete without the signature of all property owners of record, which shall serve as an acknowledgement of the submission of this application. The property owner's signature below shall also authorize the Applicant (if other than the property owner) and/or Representative to act in his/her behalf for the purposes of seeking approval for the application described herein.*

M S LLC GENERAL PARTNER

*Property Owner(s) Signature(s)*

STATE OF FLORIDA -- COUNTY

The foregoing instrument was acknowledged before me this 2 day of NOV., 20 17, by Gary Smigiel who is personally known to me or has produced _____ as identification.

Miranda Morales Seuss

Signature of Notary

MIRANDA MORALES SEUSS
Notary Public - State of Florida
Commission # GG 096191
My Comm. Expires May 30, 2021
Bonded through National Notary Assn.

***INTAKE MEETINGS ARE REQUIRED FOR ALL SUBMITTALS. CALL (772) 467-3729***

---

**TO BE COMPLETED BY STAFF**

| Zoning | Future Land Use | Total Acres | Historic District | Historic Designation |
|---|---|---|---|---|
| | | | | Contributing Individual<br>Non-Contributing None |

Pre-Application Meeting Date _____ Fees _____ Control # _____ B. Permit # _____

Intake Planner _____

Planner Assigned _____

Approved By _____ Date _____

Comments _____

Intake Date Stamp

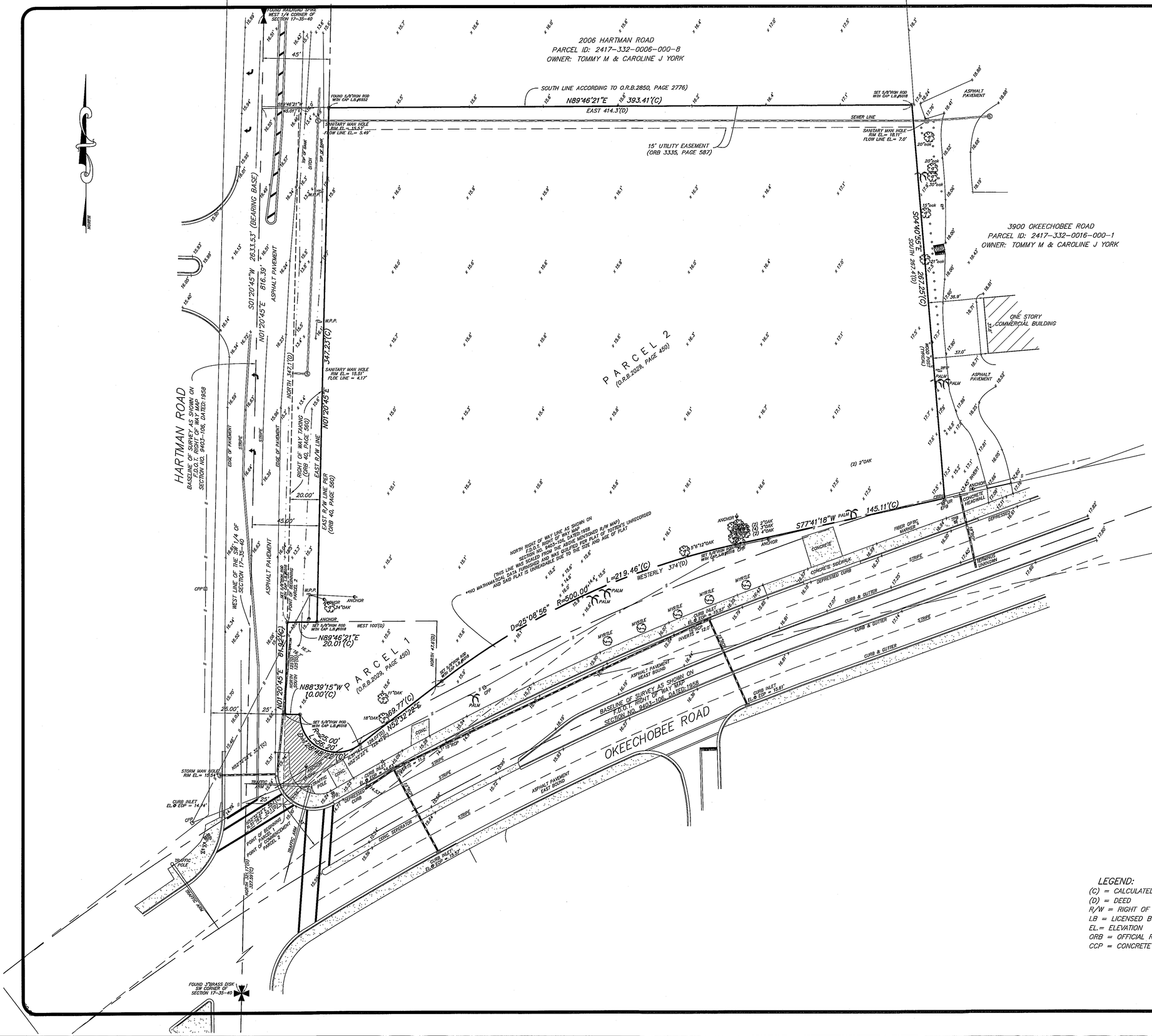


# BOUNDARY/TOPOGRAPHIC SURVEY
## SECTION 17
## TOWNSHIP 35 SOUTH, RANGE 40 EAST
## ST LUCIE COUNTY, FLORIDA.

### LEGAL DESCRIPTION:

PARCEL 1:
FROM THE SOUTHWEST CORNER OF SECTION 17, TOWNSHIP 35 SOUTH, RANGE 40 EAST. RUN NORTH ALONG THE WEST SIDE OF SAID SECTION 17, A DISTANCE OF 321.17 FEET; THENCE RUN NORTH 51°16' EAST, A DISTANCE OF 32.1 FEET, TO THE POINT OF BEGINNING; THENCE CONTINUE NORTH 51°16' EAST, ALONG THE NORTHWEST RIGHT-OF-WAY OF OKEECHOBEE ROAD (STATE ROAD NO. 8), A DISTANCE OF 128.07 FEET TO A STAKE; THENCE NORTH 47.6 FEET; THENCE SOUTH 88°34' WEST, 100 FEET TO A STAKE; THENCE SOUTH 125 FEET TO THE POINT OF BEGINNING, ST. LUCIE COUNTY, FLORIDA, LESS AND EXCEPT THE RIGHTS OF WAY FOR OKEECHOBEE ROAD AND HARTMAN ROAD, AS THEY CURRENTLY EXIST.

PARCEL 2:
FROM THE INTERSECTION OF THE EAST RIGHT-OF-WAY LINE OF HARTMAN ROAD, SAID RIGHT-OF-WAY LINE BEING 25 FEET EAST OF THE WEST LINE OF THE SOUTHWEST ONE-QUARTER OF SECTION 17, TOWNSHIP 35 SOUTH, RANGE 40 EAST, AND THE NORTH RIGHT-OF-WAY OF STATE ROAD NO. 8, SAID RIGHT-OF-WAY LINE BEING 33 FEET FROM THE CENTER LINE OF SAID ROAD MEASURED AT RIGHT ANGLE THERETO; RUN NORTH ALONG THE EAST RIGHT-OF-WAY LINE OF HARTMAN ROAD 125 FEET TO POINT OF BEGINNING; THENCE CONTINUE NORTH 347.1 FEET; THENCE EAST PARALLEL WITH THE NORTH LINE OF SAID SOUTHWEST ONE-QUARTER OF SOUTHWEST ONE-QUARTER OF SECTION 17, 414.3 FEET; THENCE SOUTH PARALLEL WITH TOTTEN ROAD 267.4 FEET TO THE NORTH RIGHT-OF-WAY LINE OF SAID ROAD NO. 8; THENCE WESTERLY ALONG SAID RIGHT-OF-WAY LINE, A DISTANCE OF 374.0 FEET; THENCE NORTH 47.6 FEET; THENCE WEST 100.0 FEET TO THE POINT OF BEGINNING.
LESS AND EXCEPTING THEREFROM THE EAST 20 FEET OF THE WEST 45 FEET OF THE SOUTH 347.1 FEET OF THE NORTH 849.7 FEET OF THE SOUTHWEST ONE-QUARTER OF THE SOUTHWEST ONE-QUARTER OF SECTION 17, TOWNSHIP 35 SOUTH, RANGE 40 EAST OF THE ABOVE DESCRIBED PROPERTY FOR HARTMAN ROAD RIGHT-OF-WAY AS PER DEED RECORDED IN OFFICIAL RECORDS BOOK 40, PAGE 560, OF THE PUBLIC RECORDS OF ST. LUCIE COUNTY, FLORIDA.
ALSO LESS AND EXCEPTING THEREFROM ALL RIGHTS-OF-WAY FOR PUBLIC ROADS.

### SURVEYOR'S NOTES:

1. NO ATTEMPT WAS MADE BY THIS FIRM TO LOCATE UNDERGROUND UTILITIES ON/OR ADJACENT TO THIS SITE. THE APPROXIMATE LOCATION OF ALL UTILITIES SHOWN HEREON WERE TAKEN FROM AS-BUILT DRAWINGS AND/OR ON-SITE LOCATION AND SHOULD BE VERIFIED BEFORE CONSTRUCTION

2. NO ATTEMPT WAS MADE BY THIS FIRM TO LOCATE UNDERGROUND FOOTINGS OF BUILDINGS OR FENCES ON OR ADJACENT TO THIS SITE.

3. LANDS SHOWN HEREON WERE SURVEYED IN ACCORDANCE WITH FIRST AMERICAN TITLE INSURANCE COMPANY, FILE NO. 17-12830, DATED: FEBRUARY 07, 2017 @ 8:00 A.M.
SCHEDULE B -- SECTION II
EXCEPTION #9 ORB 1736, PAGE 1781 – AFFECTS PROPERTY, UNPLOTTABLE
EXCEPTION #10 ORB 3335, PAGE 587 – AFFECTS PROPERTY, AS SHOWN ON SKETCH

4. BEARINGS SHOWN HEREON REFER TO AN ASSUMED MERIDIAN OF S.01°20'45"W. ALONG THE WEST LINE OF THE SW 1/4 OF SECTION 17-35-41

5. ALL ELEVATIONS ARE BASED ON NORTH AMERICAN VERTICAL DATUM OF 1988.
BENCHMARK USED: ST LUCIE COUNTY "VIR 3-22 HARRY" ELEVATIONS = 15.843

6. LEGAL DESCRIPTION FURNISHED BY CLIENT.

7. SITE AREA: 138,008.45 SQUARE FEET OR 3.17 ACRES MORE OR LESS.

8. THIS SITE LIES IN FLOOD ZONE 'X' AS SCALED AND INTERPOLATED FROM FEMA MAP PANEL NO. 12111C0186J, DATED: 2-16-2012

9. LIMITS OF JURISDICTIONAL WETLANDS, DITCHES, DRAINAGE WAYS, WATER FLOWS, AND/OR BODIES OF WATER, IF ANY, ARE NOT DETERMINED BY THIS SURVEY. CLIENT IS ADVISED TO CONTACT APPROPRIATE GOVERNING AGENCIES FOR POSSIBLE LIMITS OF JURISDICTION.

10. ADDITIONS OR DELETIONS TO SURVEY MAPS OR REPORTS BY OTHER THAN THE SIGNING PARTY OR PARTIES IS PROHIBITED WITHOUT THE WRITTEN CONSENT OF THE SIGNING PARTY OR PARTIES.

11. BEARINGS, ANGLES AND DISTANCES SHOWN HEREON ARE BASED ON PLAT, UNLESS OTHERWISE SHOWN.

12. OWNERSHIP OF FENCES SHOWN HEREON, IF ANY, IS NOT ADDRESSED BY THIS SURVEY.

13. THE EXPECTED USE OF THE SURVEY AND MAP ALL MEASUREMENTS ARE IN ACCORDANCE WITH THE UNITED STATES STANDARD.

### SURVEYOR'S CERTIFICATION:

SURVEY MAP AND REPORT OR THE COPIES THEREOF ARE NOT VALID WITHOUT THE SIGNATURE AND THE ORIGINAL RAISED SEAL OF A FLORIDA LICENSED SURVEYOR AND MAPPER

ROBERT BLOOMSTER
PROFESSIONAL LAND SURVEYOR
NO. 4134 STATE OF FLORIDA

### LEGEND:

(C) = CALCULATED
(D) = DEED
R/W = RIGHT OF WAY
LB = LICENSED BUSINESS
EL.= ELEVATION
ORB = OFFICIAL RECORDS BOOK
CCP = CONCRETE POWER POLE


BLOOMSTER
PROFESSIONAL LAND SURVEYORS, INC.
L.B. #6018

641 NORTHEAST SPENCER STREET
JENSEN BEACH, FLORIDA 34957
PHONE 772-334-0868


| | |
|---|---|
| SHEET 1 OF 1 | |
| DRAWN BY: | CDW |
| SCALE: | 1" = 30' |
| FIELD WORK COMPLETED: | 4-10-2017 |
| FIELD BOOK: | SKETCH |
| JOB NO. | 13982 |

REVISIONS

| DATE: | DESCRIPTION: | BY: |
|---|---|---|
| | | |

PREPARED FOR: DOLLAR TREE
XXXX OKEECHOBEE ROAD
FT PIERCE, ST LUCIE COUNTY, FLORIDA

CHRIS CRAFT Serving Our Neighbors
TAX COLLECTOR
ST. LUCIE COUNTY

P.O. Box 308
Fort Pierce, FL 34954-0308
772-462-1650
www.tcslc.com

# 2016 REAL ESTATE

## NOTICE OF AD VALOREM TAXES AND NON-AD VALOREM ASSESSMENTS

**Skip the trip and pay at www.tcslc.com**
- echeck (electronic payment from your checking account with no fee)
- Credit card (2.5% convenience fee applies)
- Print your receipt instantly online!

| ACCOUNT | ESCROW |
|---|---|
| 2417-333-0001-000/6 | |

Smigiel Partners XIX Ltd
PO Box 540669
Lake Worth, FL 33454-0000

4008 OKEECHOBEE RD, Fort Pierce
17 35 40 FROM SW COR SEC RUN N 321.7 FT,
TH NELY 97.13 FT FOR POB, TH NELY ALG O
See Additional Legal on Tax Roll

Paid 12/30/2016 Receipt # 0143-20161230-004846 $837.68

RETAIN THIS PORTION FOR YOUR RECORDS

### AD VALOREM TAXES

| TAXING AUTHORITY | | MILLAGE RATE | ASSESSED VALUE | EXEMPTION AMOUNT | TAXABLE VALUE | TAXES LEVIED |
|---|---|---|---|---|---|---|
| County Parks MSTU | 772-462-1670 | 0.2313 | 30,500 | 0 | 30,500 | 7.05 |
| Co Public Transit MSTU | 772-462-1670 | 0.1269 | 30,500 | 0 | 30,500 | 3.87 |
| Erosion District E | 772-462-1670 | 0.0925 | 30,500 | 0 | 30,500 | 2.82 |
| Law Enf,Jail,Judicial Sys | 772-462-1670 | 3.2838 | 30,500 | 0 | 30,500 | 100.16 |
| Co General Revenue Fund | 772-462-1670 | 4.1077 | 30,500 | 0 | 30,500 | 125.28 |
| St Lucie County Port Bond | 772-462-1670 | 0.0000 | 30,500 | 0 | 30,500 | 0.00 |
| Childrens Service Council | 772-408-1100 | 0.4765 | 30,500 | 0 | 30,500 | 14.53 |
| St Lucie Co Fire District | 772-621-3338 | 3.0000 | 30,500 | 0 | 30,500 | 91.50 |
| FL Inland Navigation Dist | 561-627-3386 | 0.0320 | 30,500 | 0 | 30,500 | 0.98 |
| City of Fort Pierce | 772-467-3777 | 6.9000 | 30,500 | 0 | 30,500 | 210.45 |
| School Discretionary | 772-429-3970 | 0.7480 | 30,500 | 0 | 30,500 | 22.81 |
| School Capital Improvemnt | 772-429-3970 | 1.5000 | 30,500 | 0 | 30,500 | 45.75 |
| School Req Local Effort | 772-429-3970 | 4.6790 | 30,500 | 0 | 30,500 | 142.71 |
| Mosquito Control | 772-462-1670 | 0.2164 | 30,500 | 0 | 30,500 | 6.60 |
| S FL Wtr Mgmt District | 561-686-8800 | 0.3307 | 30,500 | 0 | 30,500 | 10.08 |

MILLAGE CODE 0022 TOTAL MILLAGE 25.7248 TOTAL AD VALOREM TAXES $784.59

eBill

Go paperless and receive your tax bill by email.

www.tcslc.com

### NON-AD VALOREM ASSESSMENTS

| LEVYING AUTHORITY | | | AMOUNT |
|---|---|---|---|
| FP23 | Fort Pierce Stormwater Mgmt Maint | 772-467-3777 | 54.00 |
| NS40 | N St Lucie Wtr Mgmt Dist | 772-461-5050 | 25.00 |
| TOTAL ASSESSMENTS | | | $79.00 |

COMBINED TAXES AND ASSESSMENTS $863.59

Scan to view your bill online

| Pay One Amount (Discount Already Deducted) | If Postmarked By Please Pay | Dec 31, 2016 $0.00 | | | |
|---|---|---|---|---|---|


CHRIS CRAFT Serving Our Neighbors
TAX COLLECTOR
ST. LUCIE COUNTY

P.O. Box 308
Fort Pierce, FL 34954-0308
772-462-1650
www.tcslc.com

2016 REAL ESTATE

ACCOUNT
2417-333-0001-000/6

Smigiel Partners XIX Ltd
PO Box 540669
Lake Worth, FL 33454-0000


**Pay online at www.tcslc.com**
**AMOUNT DUE**

I am paying the following amount (check only one box):

Dec 31, 2016 $0.00

Checks payable to St. Lucie County Tax Collector
U.S. funds only through U.S. bank
No postdated checks · Print receipt online

Paid 12/30/2016 Receipt # 0143-20161230-004846 $837.68

Description: St Lucie,FL Assessor Map 35.40.17 Page: 1 of 2
Order: map comment:

**LEGEND:**

County Line:

Map Page Extents:

Subdivision: Boundary Name — BOCA SIEGA VILL

Hydrography: River, Lake, Stream — Lake, Pond — River, Stream, Creek

Streets: Name, Centerline, Edge of Pavement — E DOE RUN RD

Parcel: Boundary, Block ID, Parcel ID, Lot ID, Size: Parcel Dimension, Parcel Acreage — 1A (1432-807-0049-000-2) 10 18.1 Ac

| | | |
|---|---|---|
| 24-07S | 24-08S | 24-09S |
| 24-18N | 24-17N | 24-16N |
| 24-18S | 24-17S | 24-16S |

**APN RECORD LAYOUT**

Recorded Section ID — Parcel ID

99-99-999-9999-9999

Map Grid ID — Parcel Split ID

Quarter Section/Subdivision ID

**Section :** N 1/2 OF 17

**Township :** 35 S.

**Range :** 40 E.

0 100 200 400

Scale 1" = 200' (1:2400)

# ST. LUCIE, FL

**Map ID: 24-17N**

Description: St Lucie,FL Assessor Map 35.40.17 Page: 2 of 2
Order: map Comment:

R:
ted and is provided for reference purpose only and is not to be construed
ey description. Users of this map should consult source documents
limited to deeds, plats, surveys,and other public documentation for
n. First American Data Tree LLC and its subsidiary, parent, and affiliated
represent or warrant that this is complete or free from error, and do not
rsely disclaim, any liability for loss or damage caused by errors or
ssp."

**LEGEND:**

County Line:

Map Page Extents:

Subdivision: Boundary Name — BOCA SIEGA VILL

Hydrography: River, Lake, Stream — SCHUYLKILL RIVER, BUBLE LAKE, BIG BULB RIVER, Lake, Pond, River, Stream, Creek

Streets: Name, Centerline, Edge of Pavement — E DOE RUN RD

Parcel: Boundary, Block ID, Parcel ID, Lot ID, Size: Parcel Dimension, Parcel Acreage — 1A (1432-807-0049-000-2) 0.00 / 18.1 Ac

| | | |
|---|---|---|
| 24-18N | 24-17N | 24-16N |
| 24-18S | 24-17S | 24-16S |
| 24-19N | 24-20N | 24-21N |

**APN RECORD LAYOUT**

Recorded Section ID — Parcel ID

99-99-999-9999-9999

Map Grid ID — Parcel Split ID

Quarter Section/Subdivision ID

Section : S 1/2 OF 17

Township : 35 S.

Range : 40 E.

0 100 200 400

Scale 1" = 200' (1:2400)

# ST. LUCIE, FL

Map ID: **24-17S**

CHRIS CRAFT Serving Our Neighbors
TAX COLLECTOR
ST. LUCIE COUNTY

P.O. Box 308
Fort Pierce, FL 34954-0308
772-462-1650
www.tcslc.com

# 2016 REAL ESTATE

## NOTICE OF AD VALOREM TAXES AND NON-AD VALOREM ASSESSMENTS

**Skip the trip and pay at www.tcslc.com**
- echeck (electronic payment from your checking account with no fee)
- Credit card (2.5% convenience fee applies)
- Print your receipt instantly online!

| ACCOUNT | ESCROW |
|---|---|
| 2417-332-0009-000/9 | |

Smigiel Partners XIX Ltd
PO Box 540669
Lake Worth, FL 33454-0669

0 OKEECHOBEE RD, Fort Pierce
17 35 40 BEG 502.6 FT S AND 45 FT E OF NW
COR OF SW 1/4 OF SW 1/4, TH E 394.3 FT
See Additional Legal on Tax Roll

Paid 12/30/2016 Receipt # 0143-20161230-004846 $11,973.23

RETAIN THIS PORTION FOR YOUR RECORDS

## AD VALOREM TAXES

| TAXING AUTHORITY | | MILLAGE RATE | ASSESSED VALUE | EXEMPTION AMOUNT | TAXABLE VALUE | TAXES LEVIED |
|---|---|---|---|---|---|---|
| County Parks MSTU | 772-462-1670 | 0.2313 | 460,100 | 0 | 460,100 | 106.42 |
| Co Public Transit MSTU | 772-462-1670 | 0.1269 | 460,100 | 0 | 460,100 | 58.39 |
| Erosion District E | 772-462-1670 | 0.0925 | 460,100 | 0 | 460,100 | 42.56 |
| Law Enf,Jail,Judicial Sys | 772-462-1670 | 3.2838 | 460,100 | 0 | 460,100 | 1,510.88 |
| Co General Revenue Fund | 772-462-1670 | 4.1077 | 460,100 | 0 | 460,100 | 1,889.95 |
| St Lucie County Port Bond | 772-462-1670 | 0.0000 | 460,100 | 0 | 460,100 | 0.00 |
| Childrens Service Council | 772-408-1100 | 0.4765 | 460,100 | 0 | 460,100 | 219.24 |
| St Lucie Co Fire District | 772-621-3338 | 3.0000 | 460,100 | 0 | 460,100 | 1,380.30 |
| FL Inland Navigation Dist | 561-627-3386 | 0.0320 | 460,100 | 0 | 460,100 | 14.72 |
| City of Fort Pierce | 772-467-3777 | 6.9000 | 460,100 | 0 | 460,100 | 3,174.69 |
| School Discretionary | 772-429-3970 | 0.7480 | 460,100 | 0 | 460,100 | 344.15 |
| School Capital Improvemnt | 772-429-3970 | 1.5000 | 460,100 | 0 | 460,100 | 690.15 |
| School Req Local Effort | 772-429-3970 | 4.6790 | 460,100 | 0 | 460,100 | 2,152.81 |
| Mosquito Control | 772-462-1670 | 0.2164 | 460,100 | 0 | 460,100 | 99.57 |
| S FL Wtr Mgmt District | 561-686-8800 | 0.3307 | 460,100 | 0 | 460,100 | 152.16 |

MILLAGE CODE 0022 TOTAL MILLAGE 25.7248 TOTAL AD VALOREM TAXES $11,835.99

eBill
Go paperless and receive your tax bill by email.
www.tcslc.com

## NON-AD VALOREM ASSESSMENTS

| LEVYING AUTHORITY | | | AMOUNT |
|---|---|---|---|
| FP23 | Fort Pierce Stormwater Mgmt Maint | 772-467-3777 | 469.80 |
| NS40 | N St Lucie Wtr Mgmt Dist | 772-461-5050 | 37.75 |
| TOTAL ASSESSMENTS | | | $507.55 |

COMBINED TAXES AND ASSESSMENTS $12,343.54

Scan to view your bill online

| Pay One Amount (Discount Already Deducted) | If Postmarked By Please Pay | Dec 31, 2016 $0.00 | | | |
|---|---|---|---|---|---|

CHRIS CRAFT Serving Our Neighbors
TAX COLLECTOR
ST. LUCIE COUNTY

P.O. Box 308
Fort Pierce, FL 34954-0308
772-462-1650
www.tcslc.com

2016 REAL ESTATE

| ACCOUNT |
|---|
| 2417-332-0009-000/9 |

Smigiel Partners XIX Ltd
PO Box 540669
Lake Worth, FL 33454-0669

**Pay online at www.tcslc.com**
**AMOUNT DUE**

I am paying the following amount (check only one box):

Dec 31, 2016 $0.00

Checks payable to St. Lucie County Tax Collector
U.S. funds only through U.S. bank
No postdated checks · Print receipt online

Paid 12/30/2016 Receipt # 0143-20161230-004846 $11,973.23

CHRIS CRAFT Serving Our Neighbors
TAX COLLECTOR
ST. LUCIE COUNTY

## Bill History — Real Estate Account At 0 OKEECHOBEE RD, Fort Pierce

Print this page

Real Estate Account #2417-332-0009-000/9 | Parcel details | Latest bill | Full bill history

Get Bills by Email

*Amounts as of 02/03/2017*

| Bill | Balance | | | |
|---|---|---|---|---|
| 2016 Annual Bill | $0.00 | 12/30/2016 | **Paid** $11,973.23 **Receipt #**0143-20161230-004846 | Print (PDF) |
| 2015 Annual Bill | $0.00 | 02/29/2016 | **Paid** $12,414.31 **Receipt #**0143-20160229-004048 | Print (PDF) |
| 2014 Annual Bill | $0.00 | 12/31/2014 | **Paid** $11,861.51 **Receipt #**0025-20141231-008988 | Print (PDF) |
| 2013 Annual Bill | $0.00 | 12/04/2013 *Effective 11/27/2013* | **Paid** $11,774.52 **Receipt #**0129-20131204-000619 | Print (PDF) |
| 2012 Annual Bill | $0.00 | 02/25/2014 | **Paid** $13,471.16 **Receipt #**0004-20140225-002571 | Print (PDF) |
| Redeemed certificate #3090 | Face $12,823.72 Rate 0.25% | 02/25/2014 | Certificate redeemed | |
| | | 06/01/2013 | Certificate issued | |
| | | 04/24/2013 | Advertisement file created | |
| 2011 Annual Bill | $0.00 | 03/01/2012 *Effective 02/29/2012* | **Paid** $11,659.74 **Receipt #**0066-20120301-004020 | Print (PDF) |
| 2010 Annual Bill | $0.00 | 12/08/2010 | **Paid** $11,564.82 **Receipt #**0120-20101208-003113 | Print (PDF) |
| 2009 Annual Bill | $0.00 | 05/03/2010 *Effective 04/30/2010* | **Paid** $14,588.39 **Receipt #**26-20100503-002987 | Print (PDF) |
| 2008 Annual Bill | $0.00 | 02/26/2009 | **Paid** $17,125.50 **Receipt #**09-20090226-004750 | Print (PDF) |
| 2007 Annual Bill | $0.00 | 11/14/2007 | **Paid** $16,497.92 **Receipt #**99-20071114-010834 | Print (PDF) |
| 2006 Annual Bill | $0.00 | 11/30/2006 | **Paid** $16,076.74 **Receipt #**99-20061130-027400 | Print (PDF) |
| 2005 Annual Bill | $0.00 | 11/28/2005 | **Paid** $15,745.89 **Receipt #**99-20051128-36554 | Print (PDF) |
| 2004 Annual Bill | $0.00 | 12/08/2004 *Effective 11/30/2004* | **Paid** $6,715.77 **Receipt #**99-20041208-122944 | Print (PDF) |
| 2003 Annual Bill | $0.00 | 11/26/2003 | **Paid** $4,235.42 **Receipt #**99-20031126-26431 | Print (PDF) |
| **Total Balance** | **$0.00** | | | |

VISA MasterCard AMERICAN EXPRESS Cards DISCOVER NETWORK e-check

© 1997–2017, **Grant Street Group.** All rights reserved.

**Help - Contact us - Terms of service - Tax Collector home**

Michelle Franklin, CFA -- Saint Lucie County Property Appraiser -- All rights reserved.

## Property Identification

| | |
|---|---|
| Site Address: | OKEECHOBEE RD |
| Parcel ID: | 2417-332-0009-000-9 |
| Account #: | 26514 |
| Map ID: | 24/17S |
| Use Type: | 1000 |
| Zoning: | C3 |
| City/County: | Fort Pierce |

### Ownership

Smigiel Partners XIX Ltd
PO Box 540669
Lake Worth, FL 33454

### Legal Description

17 35 40 BEG 502.6 FT S AND 45 FT E OF NW COR OF SW 1/4 OF SW 1/4, TH E 394.3 FT, TH S 267.4 FT, TH WLY ON RD 374 FT, TH N 47.6FT, TH W 80 FT, TH N 347.1 FT TO POB (3.018 AC) (OR 2029-449)

### Current Values

| | |
|---|---|
| Just/Market Value: | $460,100 |
| Assessed Value: | $460,100 |
| Exemptions: | $0 |
| Taxable Value: | $460,100 |

Taxes for this parcel: SLC Tax Collector's Office

Download TRIM for this parcel: Download PDF

### Total Areas

| | |
|---|---|
| Finished/Under Air (SF): | 0 |
| Gross Area (SF): | 0 |
| Land Size (acres): | 3.02 |
| Land Size (SF): | 131,551.2 |

## Sale History

| | |
|---|---|
| Date: | Jul 22, 2004 |
| Book/Page: | 2029 / 0449 |
| Sale Code: | XX02 |
| Deed: | WD |
| Grantor: | Parisi (TR),Charles N |
| Price: | $730,000 |
| Date: | Aug 5, 1999 |
| Book/Page: | 1241 / 2988 |
| Sale Code: | XX01 |
| Deed: | WD |
| Grantor: | Mall Promenade Inc, |
| Price: | $100 |
| Date: | Feb 1, 1987 |
| Book/Page: | 0532 / 2707 |
| Sale Code: | XX01 |
| Deed: | CV |
| Grantor: | |
| Price: | $0 |
| Date: | Jul 1, 1985 |
| Book/Page: | 0471 / 0098 |
| Sale Code: | XX00 |
| Deed: | CV |
| Grantor: | |
| Price: | $1,140,000 |
| Date: | Sep 1, 1984 |
| Book/Page: | 0443 / 2656 |
| Sale Code: | XX00 |
| Deed: | CV |
| Grantor: | |
| Price: | $650,000 |
| Date: | Apr 1, 1977 |
| Book/Page: | 0267 / 1313 |
| Sale Code: | XX00 |
| Deed: | CV |
| Grantor: | |
| Price: | $125,000 |

## Building Information (1 of 1)

Finished Area: 0 SF

Gross Total Area: 0 SF

Exterior Data

| | | |
|---|---|---|
| View: | Roof Cover: | Roof Structure: |
| Building Type: | Year Built: N/A | Frame: |
| Grade: | Effective Year: 2014 | Primary Wall: |
| Story Height: | No. Units: 0 | Secondary Wall: |

Interior Data

| | | |
|---|---|---|
| Bedrooms: 0 | Electric: | Primary Int Wall: |
| Full Baths: 0 | Heat Type: | Avg Hgt/Floor: 0 |
| Half Baths: 0 | Heat Fuel: | Primary Floors: |
| A/C %: 0% | Heated %: N/A% | Sprinkled %: 0% |

Image or Sketch unavailable for display

## Special Features and Yard Items

## Current Year Values

Current Values Breakdown

| | |
|---|---|
| Building: | $0 |
| Land: | $460,100 |
| Just/Market: | $460,100 |
| Ag Credit: | $0 |
| Save Our Homes or 10% Cap: | $0 |
| Assessed: | $460,100 |
| Exemption(s): | $0 |
| Taxable: | $460,100 |

Current Year Exemption Value Breakdown

Current Year Special Assessment Breakdown

| Start Year | AssessCode | Units | Description | Amount |
|---|---|---|---|---|
| 2004 | 0041 | 8.7 | Fort Pierce Stormwater Charge | $469.80 |

| Start Year | AssessCode | Units | Description | Amount |
|---|---|---|---|---|
| 2013 | 0054 | 3.02 | North St. Lucie Water Management District | $37.75 |

This does not necessarily represent the total Special Assessements that could be charged against this property. The total amount charged for special assessments is reflected on the most current tax statement and information is available with the SLC Tax Collector's Office.

## Historical Values

## Permits

Notice: This does not necessarily represent all the permits for this property.
Click the following link to check for additional permit data in Fort Pierce

This information is believed to be correct at this time but it is subject to change and is not warranted.
© Copyright 2017 Saint Lucie County Property Appraiser. All rights reserved.

CHRIS CRAFT Serving Our Neighbors
TAX COLLECTOR
ST. LUCIE COUNTY

## Bill History — Real Estate Account At 4008 OKEECHOBEE RD, Fort Pierce

Print this page

Real Estate Account #2417-333-0001-000/6 | Parcel details | Latest bill | Full bill history

Get Bills by Email

*Amounts as of 02/03/2017*

| Bill | Balance | | | |
|---|---|---|---|---|
| 2016 Annual Bill | $0.00 | 12/30/2016 | **Paid** $837.68 **Receipt #**0143-20161230-004846 | Print (PDF) |
| 2015 Annual Bill | $0.00 | 02/29/2016 | **Paid** $867.83 **Receipt #**0143-20160229-004048 | Print (PDF) |
| 2014 Annual Bill | $0.00 | 12/31/2014 | **Paid** $786.62 **Receipt #**0025-20141231-008985 | Print (PDF) |
| 2013 Annual Bill | $0.00 | 12/04/2013 *Effective 11/27/2013* | **Paid** $735.92 **Receipt #**0129-20131204-000618 | Print (PDF) |
| 2012 Annual Bill | $0.00 | 01/30/2015 | **Paid** $870.25 **Receipt #**0015-20150130-000846 | Print (PDF) |
| Redeemed certificate #3091 | Face $785.45 Rate 6% | 01/30/2015 | Certificate redeemed | |
| | | 06/01/2013 | Certificate issued | |
| | | 04/24/2013 | Advertisement file created | |
| 2011 Annual Bill | $0.00 | 03/01/2012 *Effective 02/29/2012* | **Paid** $662.85 **Receipt #**0066-20120301-004020 | Print (PDF) |
| 2010 Annual Bill | $0.00 | 02/01/2011 *Effective 01/31/2011* | **Paid** $634.21 **Receipt #**0116-20110201-003425 | Print (PDF) |
| 2009 Annual Bill | $0.00 | 05/03/2010 *Effective 04/30/2010* | **Paid** $504.82 **Receipt #**26-20100503-002987 | Print (PDF) |
| 2008 Annual Bill | $0.00 | 02/26/2009 | **Paid** $1,502.00 **Receipt #**09-20090226-004750 | Print (PDF) |
| 2007 Annual Bill | $0.00 | 11/14/2007 | **Paid** $1,313.86 **Receipt #**99-20071114-010834 | Print (PDF) |
| 2006 Annual Bill | $0.00 | 12/11/2006 | **Paid** $1,555.59 **Receipt #**99-20061211-034769 | Print (PDF) |
| 2005 Annual Bill | $0.00 | 11/28/2005 | **Paid** $1,536.53 **Receipt #**99-20051128-36555 | Print (PDF) |
| 2004 Annual Bill | $0.00 | 12/08/2004 *Effective 11/30/2004* | **Paid** $1,920.36 **Receipt #**99-20041208-122943 | Print (PDF) |
| 2003 Annual Bill | $0.00 | 11/26/2003 | **Paid** $1,443.91 **Receipt #**99-20031126-26432 | Print (PDF) |
| **Total Balance** | **$0.00** | | | |

VISA MasterCard AMERICAN EXPRESS Cards DISCOVER NETWORK e-check

© 1997–2017, **Grant Street Group.** All rights reserved.

**Help - Contact us - Terms of service - Tax Collector home**

## Property Identification

| | | | |
|---|---|---|---|
| Site Address: 4008 OKEECHOBEE RD | Parcel ID: 2417-333-0001-000-6 | Account #: 26521 | Sec/Town/Range: 17/35S/40E |
| Map ID: 24/17S | Zoning: C3 | Use Type: 1000 | Jurisdiction: Fort Pierce |

## Ownership

Smigiel Partners XIX Ltd
PO Box 540669
Lake Worth, FL 33454

## Legal Description

17 35 40 FROM SW COR SEC RUN N 321.7 FT, TH NELY 97.13 FT FOR POB, TH NELY ALG OKEE RD 63.04 FT, TH N 47.6 FT, TH SWLY 100 FT TO E R/W HARTMAN RD, TH S ON R/W 64.77 FT TO PT, TH E 10 FT, TH SELY ON CURVE CONC TO NE 56.20 FT TO END OF CURVE AND POB (0.20 AC) (OR 2029-449)

## Current Values

| | | | |
|---|---|---|---|
| Just/Market: | $30,500 | Assessed: | $30,500 |
| Exemptions: | $0 | Taxable: | $30,500 |

## Historical Values 3-year

| Year | Just/Market | Assessed | Exemptions | Taxable |
|---|---|---|---|---|
| 2016 | $30,500 | $30,500 | $0 | $30,500 |
| 2015 | $30,500 | $30,500 | $0 | $30,500 |
| 2014 | $30,500 | $28,023 | $0 | $28,023 |

## Sale History

| Date | Book/Page | Sale Code | Deed | Grantor | Price |
|---|---|---|---|---|---|
| 07-22-2004 | 2029 / 0449 | XX02 | WD | Parisi (TR),Charles N | $730,000 |
| 10-19-2001 | 1448 / 2240 | XX00 | WD | Vogel,Dorothy C | $58,500 |
| 11-24-1999 | 1264 / 1343 | XX01 | QC | Corbitt,Annie B | $100 |

## Primary Building Information

Finished Area of this building: 0 SF
Gross Area of this building: 0 SF

Exterior Data

| | | | |
|---|---|---|---|
| View: | Roof Cover: | Roof Structure: | Building Type: |
| Year Built: N/A | Frame: | Grade: | Effective Year: 2014 |
| Primary Wall: | Story Height: | No. Units: 0 | Secondary Wall: |

Interior Data

| | | | |
|---|---|---|---|
| Bedrooms: 0 | A/C %: 0% | Electric: | Primary Int Wall: |
| Full Baths: 0 | Heated %: N/A% | Heat Type: | Avg Hgt/Floor: 0 |
| Half Baths: 0 | Sprinkled %: 0% | Heat Fuel: | Primary Floors: |

Image or Sketch unavailable for display

## Total Areas

| | |
|---|---|
| Finished/Under Air (SF): | 0 |
| Gross Area (SF): | 0 |
| Land Size (acres): | 0.2 |
| Land Size (SF): | 8,712 |
| Total Building Count: | 1 |

## Special Features and Yard Items

| Type | Qty | Units | Year Blt |
|---|---|---|---|

This information is believed to be correct at this time but it is subject to change and is not warranted.
© Copyright 2017 Saint Lucie County Property Appraiser. All rights reserved.

CITY OF FORT PIERCE
*** CUSTOMER RECEIPT ***

Batch ID: CFLORES 11/08/17 01 Receipt no: 2202

| Year | Number | Type | SvcCd | Description | Amount |
|---|---|---|---|---|---|
| 2017 | 41000003 | PL | | PLANNING DEPARTMENT | |

DOLLAR TREE $500.00
AT HARTMAN RD 4008 OKEE RD

Tender detail
CH Ref#: 2852
Total tendered: $500.00
Total payment: $500.00
$500.00

Trans date: 11/08/17 Time: 9:25:00

THANK YOU!

| | |
|---|---|
| Commitment | Commitment for Title Insurance<br>ISSUED BY<br>**GRS Title Services**<br>**17-12830** |

**FIRST AMERICAN TITLE INSURANCE COMPANY,** a Nebraska corporation (the "Company"), for a valuable consideration, commits to issue its policy or policies of title insurance, as identified in Schedule A, in favor of the proposed Insured named in Schedule A, as owner or mortgagee of the estate or interest in the Land described or referred to in Schedule A, upon payment of the premiums and charges and compliance with the Requirements; all subject to the provisions of Schedules A and B and to the Conditions of this Commitment.

This Commitment shall be effective only when the identity of the proposed Insured and the amount of the policy or policies committed for have been inserted in Schedule A by the Company.

All liability and obligation under this Commitment shall cease and terminate six (6) months after the Effective Date or when the policy or policies committed for shall issue, whichever first occurs, provided that the failure to issue the policy or policies is not the fault of the Company.

The Company will provide a sample of the policy form upon request.

This Commitment shall not be valid or binding until countersigned by an authorized officer of the Company or an agent of the Company.

IN WITNESS WHEREOF, First American Title Insurance Company has caused its corporate name to be affixed by its duly authorized officers on the Effective Date shown in Schedule A.

***First American Title Insurance Company***

Dennis J. Gilmore
President

Jeffrey S. Robinson
Secretary

(This Commitment is valid only when Schedules A and B are attached)

**Copyright 2006-2009 American Land Title Association. All rights reserved.** The use of this form is restricted to ALTA licensees and ALTA members in good standing as of the date of use. All other uses are prohibited. Reprinted under license from the American Land Title Association.

# CONDITIONS

1. The term mortgage, when used herein, shall include deed of trust, trust deed, or other security instrument.

2. If the proposed Insured has or acquired actual knowledge of any defect, lien, encumbrance, adverse claim or other matter affecting the estate or interest or mortgage thereon covered by this Commitment other than those shown in Schedule B hereof, and shall fail to disclose such knowledge to the Company in writing, the Company shall be relieved from liability for any loss or damage resulting from any act of reliance hereon to the extent the Company is prejudiced by failure to so disclose such knowledge. If the proposed Insured shall disclose such knowledge to the Company, or if the Company otherwise acquires actual knowledge of any such defect, lien, encumbrance, adverse claim or other matter, the Company at its option may amend Schedule B of this Commitment accordingly, but such amendment shall not relieve the Company from liability previously incurred pursuant to paragraph 3 of these Conditions.

3. Liability of the Company under this Commitment shall be only to the named proposed Insured and such parties included under the definition of Insured in the form of policy or policies committed for and only for actual loss incurred in reliance hereon in undertaking in good faith (a) to comply with the requirements hereof, or (b) to eliminate exceptions shown in Schedule B, or (c) to acquire or create the estate or interest or mortgage thereon covered by this Commitment. In no event shall such liability exceed the amount stated in Schedule A for the policy or policies committed for and such liability is subject to the insuring provisions and Conditions and the Exclusions from Coverage of the form of policy or policies committed for in favor of the proposed Insured which are hereby incorporated by reference and are made a part of this Commitment except as expressly modified herein.

4. This Commitment is a contract to issue one or more title insurance policies and is not an abstract of title or a report of the condition of title. Any action or actions or rights of action that the proposed Insured may have or may bring against the Company whether or not based on negligence arising out of the status of the title to the estate or interest or the status of the mortgage thereon covered by this Commitment must be based on and are subject to the provisions of this Commitment.

5. The policy to be issued will contain the following arbitration clause: Unless prohibited by applicable law, arbitration pursuant to the Title Insurance Arbitration Rules of the American Arbitration Association may be demanded if agreed to by both the Company and the Insured at the time of the controversy or claim. Arbitrable matters may include, but are not limited to, any controversy or claim between the Company and the Insured arising out of or relating to this policy, any service of the Company in connection with its issuance or the breach of a policy provision or other obligation. Arbitration pursuant to this policy and under the Rules in effect on the date the demand for arbitration is made or, at the option of the Insured, the Rules in effect at Date of Policy shall be binding upon the parties. The award may include attorneys' fees only if the laws of the state in which the land is located permit a court to award attorneys' fees to a prevailing party. Judgment upon the award rendered by the Arbitrator(s) may be entered in any court having jurisdiction thereof.
   The law of the situs of the land shall apply to an arbitration under the Title Insurance Arbitration Rules. A copy of the Rules may be obtained from the Company upon request.

ISSUED THROUGH THE OFFICE OF:

FIRST AMERICAN
TITLE INSURANCE
COMPANY

Corporate Office
1 First American Way
Santa Ana, CA 92707
(800) 854-3643

| | |
|---|---|
| Schedule A | Commitment for Title Insurance<br>ISSUED BY<br>**GRS Title Services**<br>**17-12830** |

File No.: 17-12830

1. Effective Date: February 07, 2017 @ 8:00 A.M.

2. Policy or Policies to be issued: Proposed Amount of Insurance:

   a. Owner's Policy
      ALTA Owner's Policy of Title Insurance (6-17-06) $500,000.00
      (with Florida modifications)

      Proposed Insured: CDA Holdings, LLC

   b. Loan Policy
      ALTA Loan Policy of Title Insurance (6-17-06) $0.00
      (with Florida modifications)

      Proposed Insured:

   c. $

      Proposed Insured:

   Premium: $

3. Title to the Fee Simple estate or interest in the land is at the Effective Date vested in:

   Smigiel Partners XIX, Ltd., a partnership existing under the laws of the State of Florida

4. The land referred to in this Commitment is described as follows:
   **See Exhibit "A" attached hereto and made a part hereof**

File No.: 17-12830

The land referred to herein below is situated in the County of St. Lucie, State of Florida, and is described as follows:

Parcel 1

From the Southwest corner of Section 17, Township 35 South, Range 40 East, run North along the West side of said Section 17, 321.7 feet; thence North 51°16' East, 32.1 feet, to point of beginning; thence continue North 51° 16' East, along the Northwest right of way of Okeechobee Road (State Road No. 8), a distance of 128.07 feet to a stake; thence North 47.6 feet; thence South 88°34' West, 100 feet to a stake; thence South 125 feet to the Point of Beginning. St. Lucie County, Florida, LESS AND EXCEPT the rights of way for Okeechobee Road and Hartman Road, as they currently exist.

Parcel 2

From the intersection of the East right-of-way line of Hartman Road, said right-of-way line being 25 feet East of the West line of the SW 1/4 of SW 1/4 of Section 17, Township 35 South, Range 40 East, and the North right-of-way of State Road #8, said right-of-way line being 33 feet from the center line of said road measured at right angle thereto; run North along the East right-of-way line of Hartman Road 125 feet to Point of Beginning; thence continue North 347.1 feet; thence East parallel with the North line of said SW 1/4 of SW1/4 of Section 17, 414.3 feet; thence South parallel with Totten Road 267.4 feet to the North right-of-way line of said road #8; thence Westerly along said right-of-way line a distance of 374.0 feet; thence North 47.6 feet thence West 100.0 feet to Beginning.
LESS AND EXCEPTING THEREFROM the East 20 feet of the West 45 feet of the South 347.1 feet of the North 849.7 feet of the SW 1/4 of the SW 1/4 of Section 17, Township 35 South, Range 40 East of the above described property for Hartman Road right-of-way as per Deed recorded in Official Records Book 40, Page 560, of the Public Records of St. Lucie County, Florida.
ALSO LESS AND EXCEPTING THEREFROM all rights of way for public roads.

File No.: 17-12830

**REQUIREMENTS**

The following requirements must be met:

1. Pay and/or disburse the agreed amounts for the interest in the land and/or the mortgage to be insured.

2. Pay us the premiums, fees and charges for the policy.

3. Pay all taxes and/or assessments, levied and assessed against the land, which are due and payable.

4. The following documents, satisfactory to us, creating the interest in the land and/or the mortgage to be insured must be signed, delivered and recorded:

   a. Warranty Deed conveying the land from Smigiel Partners XIX, Ltd., a partnership existing under the laws of the State of Florida to CDA Holdings, LLC. In connection with said deed, we will further require:
   i) Production of a copy of the partnership agreement, with an affidavit affixed thereto that it is a true copy of the partnership agreement and all amendments thereto, and that the partnership has not been dissolved;
   ii) That said deed be executed by all of the general partners unless said partnership agreement shows no limitation on the authority of one partner to execute a conveyance;
   iii) Should any partner be other than a natural person, we will require proof of good standing as well as documentation of authority of the person to execute documents on its behalf;
   iv) The Partnership must have been formed prior to, the date the Limited Partnership acquired title to the land;
   v) Current Certificate from the Secretary of State of the state of origin that said partnership is active and current;
   vi) Satisfactory evidence of compliance with all requirements regarding conveying and/or mortgaging partnership property contained in the Partnership Agreement;
   vii) If any partners are deceased, the Warranty Deed should be from the parties who inherited or succeeded to the interest of the deceased partner, and/or the personal representative, as their interest(s) are determined by the Company, and from the partnership, together with evidence of the written consent to the proposed transfer from the other partners;
   viii) If the partnership is dissolved, record an affidavit from the general partner signing the deed stating that the partner has not been denied authority to wind up the affairs of the partnership, and that the executing partner is not a debtor in a bankruptcy proceeding, and that the purpose of the conveyance is to wind up the partnership affairs;
   ix) The Company reserves the right to amend the commitment, including but not limited to, the addition of further requirements and/or exceptions as it deems necessary based upon a review of any of the documentation required above.

NOTE: Because the land appears of record to be unencumbered, the Company requires that the affirmative declarations of the title affidavit, which includes a representation that there are no mortgages or other liens against the land whether recorded or not recorded, be properly emphasized before execution. Just as in all transactions, every seller/borrower must be encouraged to disclose any off record encumbrance, lien, or other matter that may affect title before the Company is willing to rely upon the representations contained within the title affidavit.

5. The following exceptions from coverage, to-wit:

a. Any rights, interests or claims of parties in possession of the land not shown by the public records.
b. Any rights, interests or claims affecting the land which a correct survey would disclose and which are not shown by the public records.
c. Any lien for services, labor, or materials in connection with improvements, repairs or renovations provided before, on, or after Date of Policy, not shown by the public records.
d. Taxes or special assessments not shown as liens in the public records or in the records of the local tax collecting authority, at Date of Policy will appear on the policy(ies) to be issued in conjunction herewith, to the insured(s), unless the Company is provided an affidavit, acceptable to the Company, executed by Owner(s) sufficient to delete said exceptions from such policy(ies).

Said affidavit shall include, but not be limited to, certification (1) that Owner(s) is/are in exclusive possession of the insured land and that no improvements or structures encroach onto the land from neighboring land, nor do any improvements or structures of the Owner(s) encroach onto neighboring land, nor does any party other than the Owner(s) have any claim to possession of the insured land; (2) that there has been no labor, material or services provided for or improvements upon the insured land within the previous 90 days, which have not been paid for, and that there are no outstanding contracts, either oral or written, for the furnishing of an such labor, material or services; (3) that there are no mortgages, judgments, tax liens or other liens against the Owner, or any of the them, and/or the insured land other than as disclosed by this commitment; (4) that there are no outstanding or pending claims or law suits against the Owner(s), or any of them, that may constitute the basis for a lien against the insured land; (5) that other than as disclosed by this commitment there are no matters which constitute defects in Owner(s) title to the insured land; (6) that there are no matters existing, at the time of delivery of the deed and/or mortgage contemplated herein, which would adversely affect the ability of the Owner(s) to mortgage or convey the insured land; (7) that the Owner(s), and each of them, has never been adjudicated incompetent; and (8) that the Owner(s), and each of them, has never been a party to a bankruptcy filing, nor does the Owner(s), or any of them, contemplate or anticipate any such filing.

In addition to the affidavit referenced above, in order to delete the exception from coverage for "Any rights, interests or claims affecting the land which a correct survey would disclose and which are not shown by the public records.", the Company must be supplied with a survey acceptable to the Company or such other proof as may be acceptable to the Company relating to any rights, interests or claims affecting the land which a correct survey would disclose.

**If the above referenced affidavit or survey, in the form(s) acceptable to the Company, are not supplied to the Company, the exceptions set out above will appear in the policy(ies) to be issued in conjunction herewith, to the insured(s).**

**The Company reserves the right to include exceptions from coverage relating to matters disclosed by the affidavit and/or survey or other proof, and to make such additional requirements and/or modify the legal description (shown in Schedule A, hereof), as it may deem necessary.**

6. Satisfactory verification from appropriate governmental authorities that any and all unrecorded Special Taxing District Liens, City and County Special Assessment Liens, MSBU Assessment Liens, Impact Fees, and Water, Sewer and Trash Removal Charges, have been paid.

7. The name or names of the proposed insured(s) and/or the amount of requested insurance under the Owner's/Loan Policy to be issued must be furnished and this Commitment is subject to such further exceptions and/or requirements as may then be deemed necessary.

8. Proof of payment of taxes and assessments for the year 2016, and prior years, plus any penalties and interest.

9. Note: The following is for informational purposes only and is given without assurance or guarantee: 2016 taxes show **PAID** in the gross amount of $12,343.54 for Tax Identification No. 2417-332-0009-000/9.

10. Note: The following is for informational purposes only and is given without assurance or guarantee: 2016 taxes show **PAID** in the gross amount of $863.59 for Tax Identification No. 2417-333-0001-000/6.

NOTE: The following conveyance(s) have been recorded within the last 24 months:

None

File No.: 17-12830

**PART II**

Schedule B of the policy or policies to be issued will contain exceptions to the following matters unless the same are disposed of to the satisfaction of the Company:

1. Defects, liens, encumbrances, adverse claims or other matters, if any, created, first appearing in the public records or attaching subsequent to the effective date but prior to the date the proposed insured acquires for value of record the estate or interest or mortgage thereon covered by this Commitment.

2. Any rights, interests, or claims of parties in possession of the land not shown by the public records.

3. Any encroachment, encumbrance, violation, variation or adverse circumstance affecting the Title that would be disclosed by an accurate and complete land survey of the land.

4. Any lien, for services, labor, or materials in connection with improvements, repairs or renovations provided before, on, or after Date of Policy, not shown by the public records.

5. Any dispute as to the boundaries caused by a change in the location of any water body within or adjacent to the land prior to Date of Policy, and any adverse claim to all or part of the land that is, at Date of Policy, or was previously under water.

6. Taxes or special assessments not shown as liens in the public records or in the records of the local tax collecting authority, at Date of Policy.

7. Any minerals or mineral rights leased, granted or retained by current or prior owners.

8. Taxes and assessments for the year 2017 and subsequent years, which are not yet due and payable.

   NOTES FOR STANDARD EXCEPTIONS: Standard Exceptions for parties in possession, for mechanics liens, and for taxes or special assessments not shown as liens in the public records shall be deleted upon receipt of an acceptable Non-Lien and Possession Affidavit establishing who is in possession of the lands, that there are no liens or encumbrances upon the lands other than as set forth in the Commitment, that no improvements to the lands have been made within the past 90 days or are contemplated to be made before closing that will not be paid in full, and that there are no unrecorded taxes or assessments that are not shown as existing liens in the public records. Any Policies issued hereunder may be subject to a Special Exception for matters disclosed by said affidavit.

   Standard Exception(s) for questions of survey may be deleted upon receipt and review of a properly certified Survey meeting the Florida Minimum Technical Standards for all land surveys dated no more than 90 days prior to closing or such other proof as may be acceptable to the Company. Any Policies issued hereunder may be subject to a Special Exception for matters disclosed by said survey or proof.

9. Ordinance No. K-223 as recorded in Book 1736, Page 1781.

10. Easement for Utilities, recorded in Book 3335, Page 587.

11. Terms and conditions of any existing unrecorded lease(s), and all rights of lessee(s) and any parties claiming through the lessee(s) under the lease(s).

.

Note: All of the recording information contained herein refers to the Public Records of St. Lucie County, Florida, unless otherwise indicated. Any reference herein to a Book and Page is a reference to the Official Record Books of said county, unless indicated to the contrary.

**Notices - Where Sent**

All notices required to be given the Company and any statement in writing required to be furnished the Company shall include the number of this policy and shall be addressed to the Company, Attention: Claims Department, 1 First American Way, Santa Ana, CA 92707.

**Service, Quality and Availability**

First American Title Insurance Company cares about its customers and their ability to obtain information and service on a convenient, timely and accurate basis. A qualified staff of service representatives is dedicated to serving you. A toll-free number is available for your convenience in obtaining information about coverage and to provide assistance in resolving complaints at 1-800-854-3643. Office hours are from 8:30 a.m. through 5:30 p.m. Monday through Friday.

First American

02/09/2017

Re: File # **17-12830**
Property Address: **4008 Okeechobee Rd**, **Fort Pierce, FL 34947**

**YOU MAY BE ENTITLED TO A REDUCED PREMIUM FOR TITLE INSURANCE IF THIS OFFICE IS PROVIDED WITH A PRIOR OWNER'S POLICY INSURING THE SELLER OR MORTGAGOR IN THE CURRENT TRANSACTION.**

An order has been placed with this company for a title insurance policy. The purpose of this letter is to provide you with important information regarding the title insurance premium that has been or will be charged in connection with this transaction.

Eligibility for a discounted title insurance premium will depend on :

REFINANCE TRANSACTIONS:
To qualify for a reduced premium for title insurance you must provide our office with a copy of your prior owner's policy of title insurance insuring your title to the above-referenced property.

SALES TRANSACTIONS:
To qualify for a reduced premium for title insurance you must provide our office with a copy of your (or your seller's) prior owner's policy of title insurance insuring your title to the above-referenced property. The effective date of the prior owner's policy must be less than three years old or the property insured by the policy must be unimproved (except roads, bridges, drainage facilities and utilities are not considered improvements for this purpose).

To qualify for the reduced rate, you or your representative may hand deliver, mail or fax a copy of the prior owner's policy of title insurance to the above address or fax number prior to closing, although we will accept the prior policy up to 5 working days after the closing date of your transaction.

First American Title

**Privacy Information**

**We Are Committed to Safeguarding Customer Information**

In order to better serve your needs now and in the future, we may ask you to provide us with certain information. We understand that you may be concerned about what we will do with such information - particularly any personal or financial information. We agree that you have a right to know how we will utilize the personal information you provide to us. Therefore, together with our subsidiaries we have adopted this Privacy Policy to govern the use and handling of your personal information.

**Applicability**

This Privacy Policy governs our use of the information that you provide to us. It does not govern the manner in which we may use information we have obtained from any other source, such as information obtained from a public record or from another person or entity. First American has also adopted broader guidelines that govern our use of personal information regardless of its source. First American calls these guidelines its Fair Information Values.

**Types of Information**

Depending upon which of our services you are utilizing, the types of nonpublic personal information that we may collect include:

- Information we receive from you on applications, forms and in other communications to us, whether in writing, in person, by telephone or any other means;
- Information about your transactions with us, our affiliated companies, or others; and
- Information we receive from a consumer reporting agency.

**Use of Information**

We request information from you for our own legitimate business purposes and not for the benefit of any nonaffiliated party. Therefore, we will not release your information to nonaffiliated parties except: (1) as necessary for us to provide the product or service you have requested of us; or (2) as permitted by law. We may, however, store such information indefinitely, including the period after which any customer relationship has ceased. Such information may be used for any internal purpose, such as quality control efforts or customer analysis. We may also provide all of the types of nonpublic personal information listed above to one or more of our affiliated companies. Such affiliated companies include financial service providers, such as title insurers, property and casualty insurers, and trust and investment advisory companies, or companies involved in real estate services, such as appraisal companies, home warranty companies and escrow companies. Furthermore, we may also provide all the information we collect, as described above, to companies that perform marketing services on our behalf, on behalf of our affiliated companies or to other financial institutions with whom we or our affiliated companies have joint marketing agreements.

**Former Customers**

Even if you are no longer our customer, our Privacy Policy will continue to apply to you.

**Confidentiality and Security**

We will use our best efforts to ensure that no unauthorized parties have access to any of your information. We restrict access to nonpublic personal information about you to those individuals and entities who need to know that information to provide products or services to you. We will use our best efforts to train and oversee our employees and agents to ensure that your information will be handled responsibly and in accordance with this Privacy Policy and First American's Fair Information Values. We currently maintain physical, electronic, and procedural safeguards that comply with federal regulations to guard your nonpublic personal information.

**Information Obtained Through Our Web Site**

First American Financial Corporation is sensitive to privacy issues on the Internet. We believe it is important you know how we treat the information about you we receive on the Internet.

In general, you can visit First American or its affiliates' Web sites on the World Wide Web without telling us who you are or revealing any information about yourself. Our Web servers collect the domain names, not the e-mail addresses, of visitors. This information is aggregated to measure the number of visits, average time spent on the site, pages viewed and similar information. First American uses this information to measure the use of our site and to develop ideas to improve the content of our site.

There are times, however, when we may need information from you, such as your name and email address. When information is needed, we will use our best efforts to let you know at the time of collection how we will use the personal information. Usually, the personal information we collect is used only by us to respond to your inquiry, process an order or allow you to access specific account/profile information. If you choose to share any personal information with us, we will only use it in accordance with the policies outlined above.

**Business Relationships**

First American Financial Corporation's site and its affiliates' sites may contain links to other Web sites. While we try to link only to sites that share our high standards and respect for privacy, we are not responsible for the content or the privacy practices employed by other sites.

**Cookies**

Some of First American's Web sites may make use of "cookie" technology to measure site activity and to customize information to your personal tastes. A cookie is an element of data that a Web site can send to your browser, which may then store the cookie on your hard drive.

FirstAm.com uses stored cookies. The goal of this technology is to better serve you when visiting our site, save you time when you are here and to provide you with a more meaningful and productive Web site experience.

---

**Fair Information Values**

**Fairness** We consider consumer expectations about their privacy in all our businesses. We only offer products and services that assure a favorable balance between consumer benefits and consumer privacy.

**Public Record** We believe that an open public record creates significant value for society, enhances consumer choice and creates consumer opportunity. We actively support an open public record and emphasize its importance and contribution to our economy.

**Use** We believe we should behave responsibly when we use information about a consumer in our business. We will obey the laws governing the collection, use and dissemination of data.

**Accuracy** We will take reasonable steps to help assure the accuracy of the data we collect, use and disseminate. Where possible, we will take reasonable steps to correct inaccurate information. When, as with the public record, we cannot correct inaccurate information, we will take all reasonable steps to assist consumers in identifying the source of the erroneous data so that the consumer can secure the required corrections.

**Education** We endeavor to educate the users of our products and services, our employees and others in our industry about the importance of consumer privacy. We will instruct our employees on our fair information values and on the responsible collection and use of data. We will encourage others in our industry to collect and use information in a responsible manner.

**Security** We will maintain appropriate facilities and systems to protect against unauthorized access to and corruption of the data we maintain.

JOSEPH E. SMITH, CLERK OF THE CIRCUIT COURT - SAINT LUCIE COUNTY
FILE # 3641873 OR BOOK 3335 PAGE 587, Recorded 10/27/2011 at 03:20 PM
Doc Tax: $0.70

RETURN TO: BOX 145

THIS INSTRUMENT PREPARED BY:
R. N. KOBLEGARD, III, ESQUIRE
200 S. INDIAN RIVER DRIVE, #201
FORT PIERCE, FL 34950

PROPERTY APPRAISERS PARCEL ID (FOLIO) NUMBER(S):
2417-332-0009-000-9

EASEMENT
FROM LIMITED PARTNERSHIP

Recd. 35.50 70/36.20 Doc. Stamps

*Know All Men by These Presents*, that the undersigned

**SMIGIEL PARTNERS XIX, LTD., A FLORIDA LIMITED PARTNERSHIP**

for and in consideration of the sum of One Dollar, to them in hand paid by **Fort Pierce Utilities Authority of the City of Fort Pierce, Florida** (located at 206 South Sixth Street), a municipal corporation under the laws of the State of Florida, receipt whereof is hereby acknowledged, do hereby convey and grant to the **City of Fort Pierce, Florida, for the use and benefit of Fort Pierce Utilities Authority**, the privilege and easement for the installation of utilities consistent with the Dale's BBQ West Gravity Main Extension construction plans attached hereto as Exhibit "A" and the maintenance, operation, repair, replacement and/or removal of their municipal-owned electric, water, sewer and natural gas utilities, in, under, upon, along, over and across the following-described land, a depiction of which is attached hereto as Exhibit "B", in St. Lucie County, Florida, to wit:

**The Northernmost 15 feet of the following described property, to wit:**

**From the intersection of the East right-of-way line of Hartman Road, said right-of-way line being 25 feet East of the West line of the SW1/4 of SW1/4 of Section 17, Township 35 South, Range 40 East, and the North right-of-way of State Road #8, said right-of-way line being 33 feet from the center line of said road measured at right angle thereto; run North along the East right-of-way line of Hartman Road 125 feet to Point of Beginning; thence continue North 347.1 feet; thence East parallel with the North line of said SW1/4 of SW1/4 of Section 17, 414.3 feet; thence South parallel with Totten Road 267.4 feet to the North right-of-way line of said road #8; thence Westerly along said right-of-way line a distance of 374.0 feet; thence North 47.6 feet; thence West 100.0 feet to Beginning.**

**LESS AND EXCEPTING THEREFROM the East 20 feet of the West 45 feet of the South 347.1 feet of the North 849.7 feet of the SW1/4 of the SW 1/4 of Section 17. Township 35 South, Range 40 East of the above described property for Hartman Road right-of-way as per Deed recorded in Official Records Book 40, Page 560, of the Public Records of St. Lucie County. Florida.**

**ALSO LESS AND EXCEPTING THEREFROM all rights of way for Public Roads.**

_____

_____.

Access to the above strip of land over the adjoining lands of the GRANTORS is hereby granted. The GRANTEE may cut or trim trees, bushes and saplings growing upon or extending over said strip of land so far as may be reasonably necessary in the installation, maintenance, operation, repair, replacement and/or removal of said utilities. Patrolling said easement shall not constitute grounds for a claim for damage.

The GRANTORS reserve the use of said strip of land for any use not inconsistent herewith including, but not limited to, landscaping and setbacks, but no buildings or structures shall be erected or placed on said strip of land by GRANTORS. The rights herein granted may be assigned in whole or in part.

The undersigned hereby covenant and warrant that they own the said land and have the right to grant this easement.

***SIGNED, SEALED AND DELIVERED IN OUR PRESENCE AS WITNESSES:***

*In Witness Whereof, the GRANTOR has caused these presents to be executed in its name, by its proper member thereunto duly authorized this*

*14th day of OCTOBER, 2011.*

***GRANTOR:***

***SMIGIEL PARTNERS XIX, LTD., a Florida Limited Partnership***

***By: GARY SMIGIEL, L.C., a Florida Limited Liability Company, its General Partner***

Valerie Tarplee
*Witness Signature*
Valerie Tarplee
Printed Witness Signature

Lisa Nagel
*Witness Signature*
Lisa Nagel
Printed Witness Signature

By: [signature]
Gary Smigiel, Managing Member

7965 Lantana Road

Lake Worth, FL 33467

---

I hereby certify that on this day before me, an officer duly authorized to administer oaths and take acknowledgments, personally appeared **Gary Smigiel, known to me to be the Managing Member of GARY SMIGIEL, L.C., a Florida Limited Liability Company, General Partner of SMIGIEL PARTNERS XIX, LTD., a Florida Limited Partnership,** the entity in whose name the foregoing instrument was executed, and that he acknowledged executing the same for such entity, freely and voluntarily, under authority duly vested in him by said entity, who is personally known to me or who has produced _____ as identification, and that an oath was not taken.

**WITNESS** my hand and official seal in the County and State last aforesaid this 14th day of October, 2011

VALERIE J. TARPLEE
MY COMMISSION # DD 736567
EXPIRES: November 26, 2011
Bonded Thru Notary Public Underwriters

Valerie J. Tarplee
Notary Signature

(NOTARY SEAL)

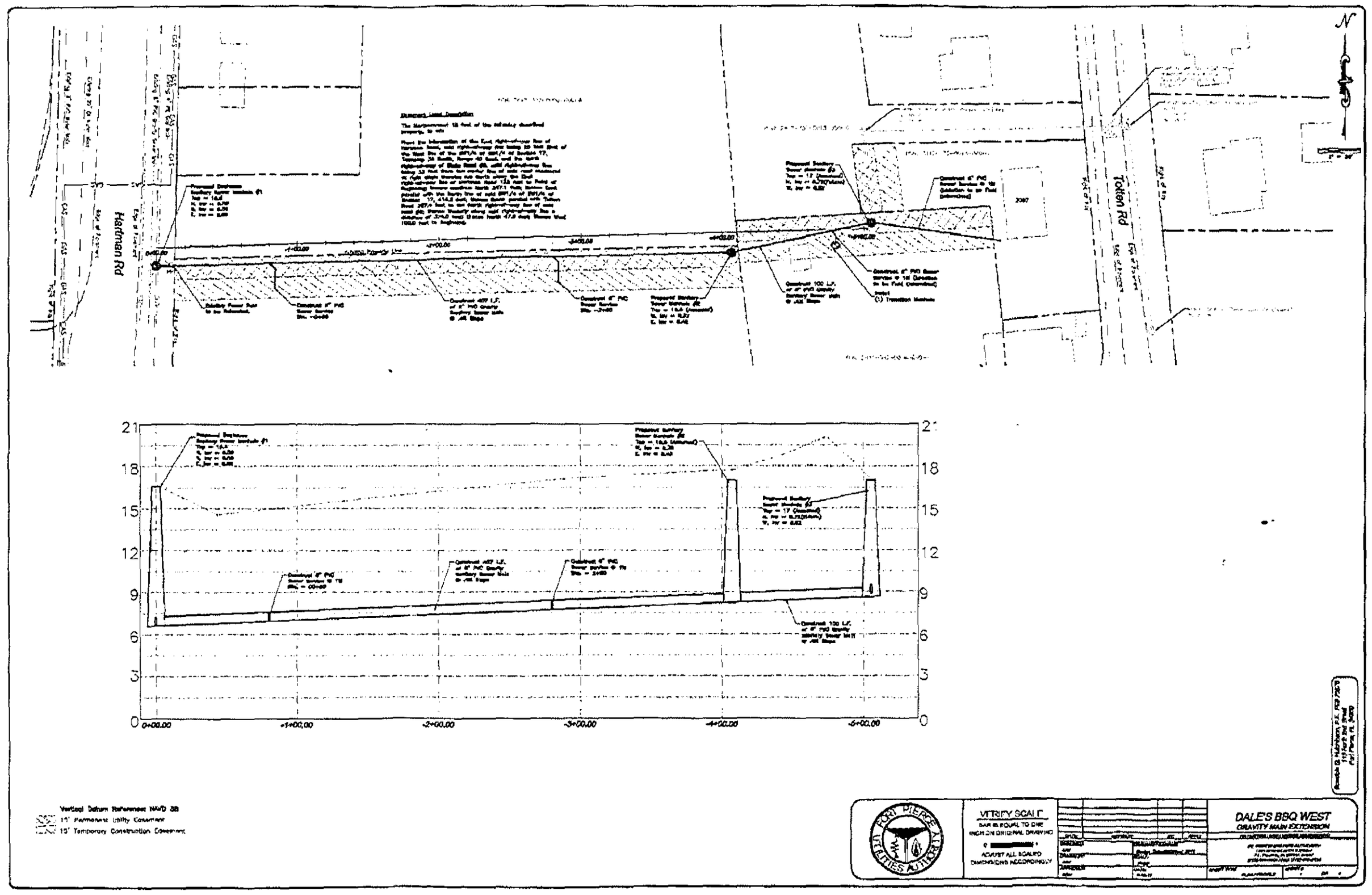
Hardman Rd
Tolan Rd
N
21
18
15
12
9
6
3
0
0+00.00
+1+00.00
-2+00.00
-3+00.00
-4+00.00
-5+00.00
Vertical Datum Referenced NAVD 88
15' Permanent Utility Easement
15' Temporary Construction Easement
VERIFY SCALE
BAR IS EQUAL TO ONE INCH ON ORIGINAL DRAWING
ADJUST ALL SCALED DIMENSIONS ACCORDINGLY
DALE'S BBQ WEST
GRAVITY MAIN EXTENSION

EXHIBIT "A"

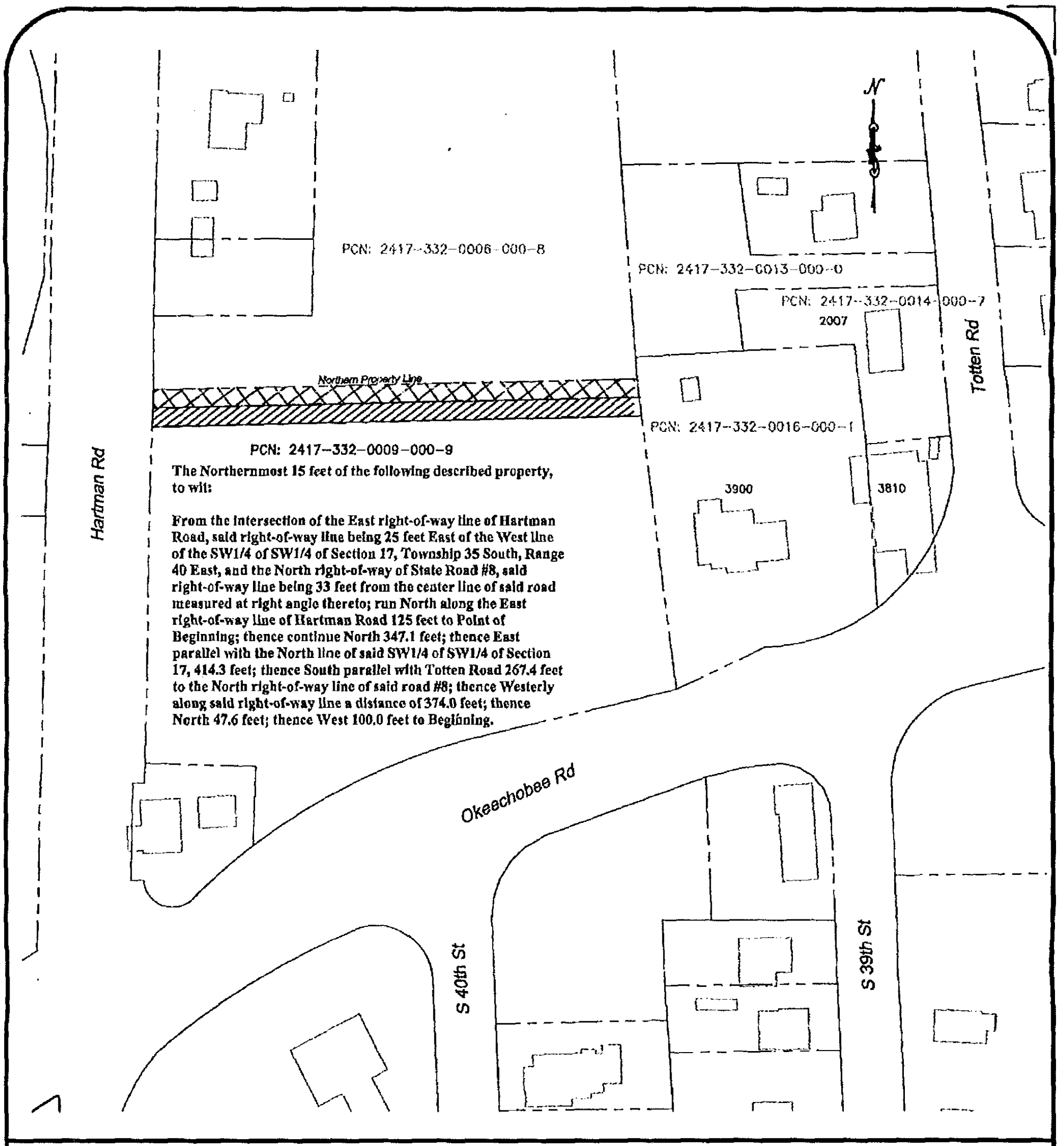


15' Permanent Utility Easement

15' Temporary Construction Easement

FORT PIERCE UTILITIES AUTHORITY

*WATER/WASTEWATER/GAS ENGINEERING*
*FT. PIERCE UTILITIES AUTHORITY*
*206 SOUTH 6TH STREET*
*FT. PIERCE, FLORIDA 34948*
*(772) 466-1600 / FAX (772) 489-0396*

## *Easement Exhibit*

## *Dale's BBQ Sewer Extension*

*10-10-11*

EXHIBIT "B"

JOANNE HOLMAN, CLERK OF THE CIRCUIT COURT - SAINT LUCIE COUNTY
File Number: 2222555 OR BOOK 1736 PAGE 1781
Recorded:06/19/03 09:44

E

OFFICE OF CITY CLERK
CITY OF FT. PIERCE
100 N. U.S. 1
P.O. BOX 1480
FT PIERCE, FL 34954

**ORDINANCE NO. K-223**

AN ORDINANCE EXTENDING THE TERRITORIAL LIMITS OF THE CITY OF FORT PIERCE, FLORIDA, TO INCLUDE PROPERTY GENERALLY LOCATED ON THE **NORTH SIDE OF OKEECHOBEE ROAD BETWEEN HARTMAN ROAD AND TOTTEN ROAD**; DIRECTING THE ST. LUCIE COUNTY PROPERTY APPRAISER TO ASSESS SAID PROPERTY AND PLACE IT ON THE CITY TAX ROLLS AS OF JANUARY 1, 2004; DIRECTING THE ST. LUCIE COUNTY TAX COLLECTOR TO COLLECT TAXES ON THE HEREIN DESCRIBED PROPERTY; CERTIFYING PUBLICATION OF THIS ORDINANCE; ZONING SAID LAND; ESTABLISHING THE FUTURE LAND USE DESIGNATION; REPEALING ALL ORDINANCES OR PARTS OF ORDINANCES IN CONFLICT HEREWITH; AND PROVIDING FOR THE EFFECTIVE DATE HEREOF.

BE IT ORDAINED BY THE CITY COMMISSION OF THE CITY OF FORT PIERCE, FLORIDA:

SECTION 1. The territorial limits of the City of Fort Pierce, Florida, be and they are hereby extended to annex to the said City property generally located on the north side of Okeechobee Road, between Hartman Road and Totten Road; legally described as:

> 17 35 40 BEG 502.6 FT S AND 45 FT E OF NW COR OF SW 1/4 OF SW 1/4, TH E 394.3 FT, TH S 267.4 FT, TH W LY ON RD 374 FT, TH N 47.6 FT, TH W 80 FT, TH N 347.1 FT TO POB (3.018 AC) (OR 532-2707:1241-2988)(Property I. D. 2417-332-0009-000-9).

SECTION 2. That the St. Lucie County Property Appraiser and the St. Lucie County Tax Collector are directed to place upon and add to the assessment roll, and to collect taxes on the land described in Section 1 hereof as of January 1, 2004 and subsequent years, and to enter the same at such valuation that it will bear an equal and just proportion of taxes as of that date and subsequent years.

SECTION 3. That the City Clerk shall cause notice of this annexation to be published once each week for two consecutive weeks prior to final passage in The Tribune in Fort Pierce, Florida.

SECTION 4. That upon this ordinance becoming effective, the land hereinabove described and annexed to the territorial limits of the City of Fort Pierce shall be and the same is zoned C-3, General

Commercial Zone, and the Future Land Use Designation is CG, General Commercial Land Use, in accordance with the Zoning Ordinance of the City of Fort Pierce, Florida.

SECTION 5. All ordinances or parts of ordinances in conflict herewith are hereby repealed.

SECTION 6. This ordinance shall be and become effective immediately upon final passage.

STATE OF FLORIDA) ss
ST. LUCIE COUNTY)

WE, THE UNDERSIGNED, Mayor Commissioner and the City Clerk of the City of Fort Pierce, Florida, do hereby certify that the foregoing and above Ordinance No. K-223 was duly advertised in accordance with Section 171.044(2) of the Florida Statutes in The Tribune in Fort Pierce, Florida, on May 23, 2003, and on May 30, 2003; copy of said ordinance was made available at the office of the City Clerk to the public upon request; said ordinance was duly introduced, read by title only, and passed on first reading by the City Commission of the City of Fort Pierce, Florida, on June 2, 2003; and was duly introduced, read by title only, and passed on second and final reading on June 16, 2003, by the City Commission of the City of Fort Pierce, Florida.

IN WITNESS HEREWITH, we hereunto set our hands and affix the Official Seal of the City of Fort Pierce, Florida, this the 17th day of June, 2003.

MAYOR COMMISSIONER

CITY CLERK

(CITY SEAL)

ATTACHMENT TO ORDINANCE NO. K-223

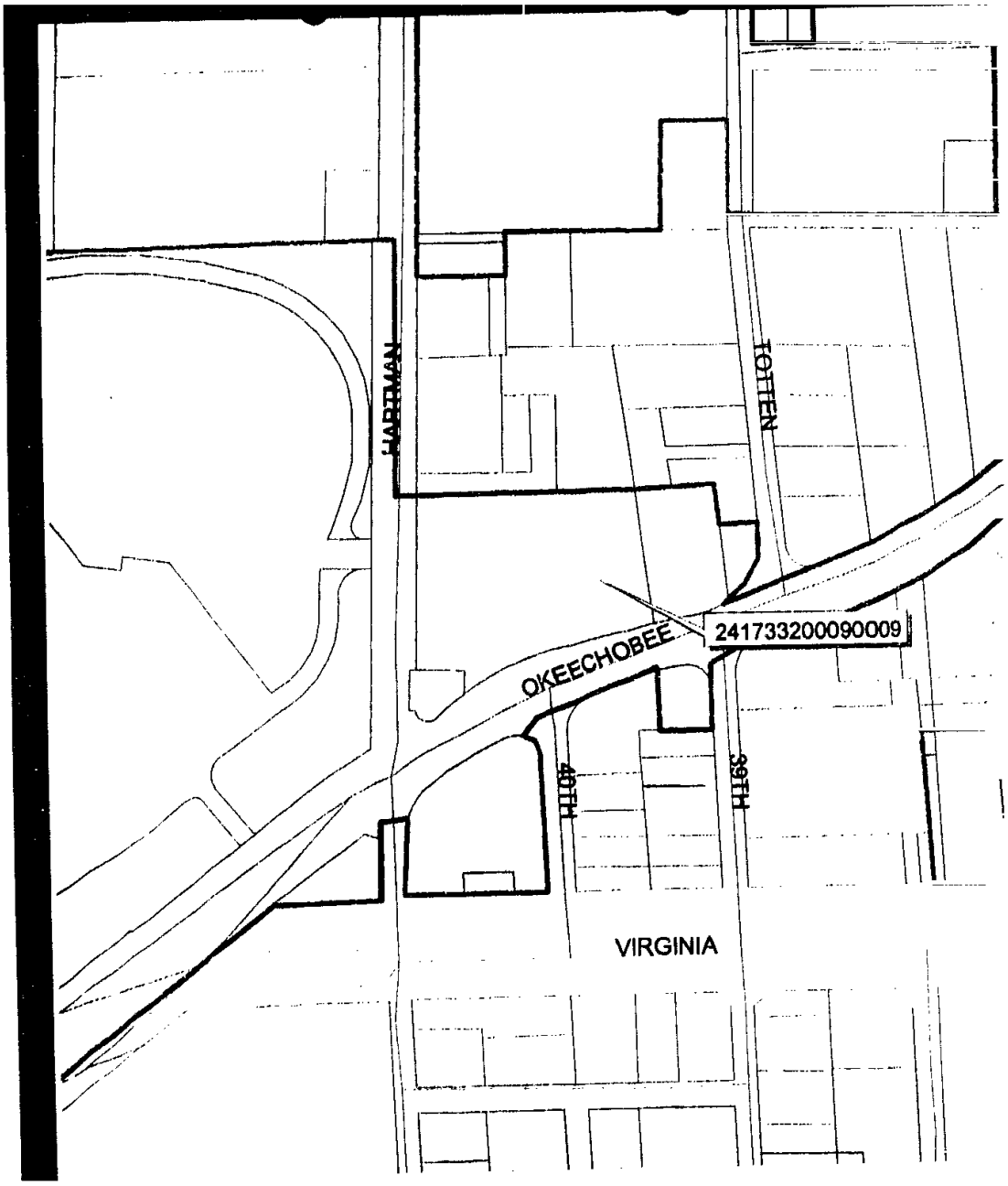


# REVISED CORPORATE LIMITS

JOANNE HOLMAN, CLERK OF THE CIRCUIT COURT - SAINT LUCIE COUNTY
File Number: 2449661 OR BOOK 2029 PAGE 449
Recorded:07/28/04 13:55

This Document Prepared By and Return to:
Stephen Navaretta, Esq.
Navaretta & Navaretta, P.A.
1100 SW St. Lucie West Blvd.
Port St. Lucie, FL 34986

* Doc Assump: $ 0.00
* Doc Tax 2003 : $ 5,110.00
* Int Tax : $ 0.00

Parcel ID Number: 2417-333-0001-000/6 &

# Warranty Deed

**This Indenture,** Made this 22nd day of July, 2004 A.D., **Between** Charles N. Parisi, Individually and as Trustee under Declaration of Trust dated December 13, 1995 of the County of MARTIN State of Florida, **grantor,** and SMIGIEL PARTNERS XIX, LTD., a partnership existing under the laws of the State of Florida whose address is: 6534 Rock Creek Drive, Lake Worth, FL 33467

of the County of Palm Beach, State of Florida, **grantee.**

**Witnesseth** that the GRANTOR, for and in consideration of the sum of ----------TEN DOLLARS ($10)---------- DOLLARS, and other good and valuable consideration to GRANTOR in hand paid by GRANTEE, the receipt whereof is hereby acknowledged, has granted, bargained and sold to the said GRANTEE and GRANTEE'S heirs, successors and assigns forever, the following described land, situate, lying and being in the County of St. Lucie State of Florida to wit:

See Exhibit "A" attached hereto.

Subject to restrictions, reservations and easements of record, if any, and taxes subsequent to December 31, 2003.

Said property is not the homestead of Grantor who resides in Tequesta, Florida.

and the grantor does hereby fully warrant the title to said land, and will defend the same against lawful claims of all persons whomsoever.

**In Witness Whereof,** the grantor has hereunto set its hand and seal the day and year first above written.

**Signed, sealed and delivered in our presence:**

Charles N. Parisi, Individually and as Trustee under Declaration of Trust dated December 13, 1995

Laure Mosher
Printed Name: Laure Mosher
Witness

By: Charles N. Parisi (Seal)
P.O. Address: 50 Beach Road, Ste. 201, Tequesta, Florida 33469

Noemi Golcher
Printed Name: Noemi Golcher
Witness

By: Charles N. Parisi (Seal)
P.O. Address: 50 Beach Road, Ste. 201, Tequesta, Florida 33469

STATE OF Florida
COUNTY OF ~~MARTIN~~ Palm Beach

The foregoing instrument was acknowledged before me this 22nd day of July, 2004 by on behalf of said Florida trust by Charles N. Parisi

he is personally known to me or he has produced his Florida driver's license as identification.

Christina Seagle
Printed Name: Christina Seagle
Notary Public
My Commission Expires:
My Commission DD092836
Expires May 14, 2006

PARISI

# Exhibit "A"

Parcel 1

From the Southwest corner of Section 17, Township 35 South, Range 40 East, run North along the west side of said Section 17, 321.7 feet; thence North 51°16' East, 32.1 feet, to point of beginning; thence continue North 51° 16' East, along the Northwest right of way of Okeechobee Road (State Road No. 8), a distance of 128.07 feet to a stake; thence North 47.6 feet; thence South 88°34' West, 100 feet to a stake; thence South 125 feet to the Point of Beginning. St. Lucie County, Florida, LESS AND EXCEPT the rights of way for Okeechobee Road and Hartman Road, as they currently exist.

Parcel 2

From the intersection of the East right-of-way line of Hartman Road, said right-of-way line being 25 feet East of the West line of the SW 1/4 of SW 1/4 of Section 17, Township 35 South, Range 40 East, and the North right -of-way of State Road #8, said right-of-way line being 33 feet from the center line of said road measured at right angle thereto; run North along the East right-of-way line of Hartman Road 125 feet to Point of Beginning; thence continue North 347.1 feet; thence East parallel with the North line of said SW 1/4 of SW 1/4 of Section 17, 414.3 feet; thence South parallel with Totten Road 267.4 feet to the North right-of-way line of said road #8; thence Westerly along said right-of-way line a distance of 374.0 feet; thence North 47.6 feet; thence West 100.0 feet to Beginning.
LESS AND EXCEPTING THEREFROM the East 20 feet of the West 45 feet of the South 347.1 feet of the North 849.7 feet of the SW 1/4 of the SW 1/4 of Section 17, Township 35 South, Range 40 East of the above described property for Hartman Road right-of-way as per Deed recorded in Official Records Book 40, page 560, of the of the Public Records of St. Lucie County, Florida.
ALSO LESS AND EXCEPTING THEREFROM all rights of way for public roads.

PLAT BOOK: _____
PAGE: _____
DOCKET NO. _____



# DOLLAR TREE AT OKEECHOBEE AND HARTMAN

BEING A PORTION OF SECTION 17, TOWNSHIP 35 SOUTH, RANGE 40 EAST
CITY OF FORT PIERCE, ST. LUCIE COUNTY, FLORIDA.

THIS INSTRUMENT WAS PREPARED BY:
WATSON | KILLANE SURVEYING AND MAPPING, INC.
2240 NORTHEAST DIXIE HIGHWAY
JENSEN BEACH, FLORIDA 34957
PHONE: NO. (772) 334-0868 - EMAIL: WATSONKILLANE@GMAIL.COM

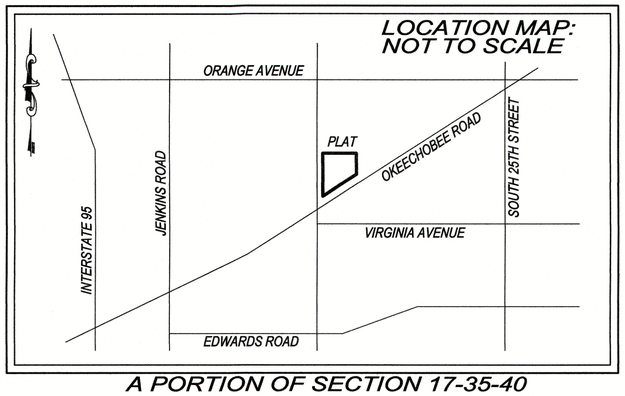


A PORTION OF SECTION 17-35-40

## CERTIFICATE OF DEDICATION AND DEDICATION:

STATE OF FLORIDA
COUNTY OF ST. LUCIE

KNOW ALL MEN BY THESE PRESENTS, THAT CDA HOLDINGS, LLC, FEE SIMPLE OWNER OF THE LANDS SHOWN HEREON, BEING A PARCEL OF LAND LYING IN SECTION 17, TOWNSHIP 35 SOUTH, RANGE 40 EAST, ST. LUCIE COUNTY, FLORIDA, AND SHOWN HEREON AS DOLLAR TREE AT OKEECHOBEE AND HARTMAN.

BEING MORE PARTICULARLY DESCRIBED AS FOLLOWS:

COMMENCE AT THE SOUTHWEST CORNER OF SAID SECTION 17; THENCE NORTH 01°20'45" EAST, ALONG THE WEST LINE OF SAID SECTION 17, A DISTANCE OF 816.39 FEET; THENCE NORTH 89°46'21" EAST, A DISTANCE OF 45.01 FEET TO THE SOUTHWEST CORNER OF THE LANDS SHOWN IN OFFICIAL RECORD BOOK 2850, PAGE 2776, AS RECORDED IN THE PUBLIC RECORDS OF ST. LUCIE COUNTY, FLORIDA, AND THE POINT OF BEGINNING; THENCE CONTINUE NORTH 89°46'21" EAST, A DISTANCE OF 393.41 FEET TO A POINT ON THE WEST LINE OF LANDS SHOWN IN OFFICIAL RECORD BOOK 466, PAGE 448, OF THE PUBLIC RECORDS OF ST. LUCIE COUNTY, FLORIDA; THENCE SOUTH 04°40'55" EAST, A DISTANCE OF 267.25 FEET TO A POINT ON THE NORTH RIGHT OF WAY OF OKEECHOBEE ROAD; THENCE SOUTH 77°41'18" WEST, ALONG SAID RIGHT OF WAY LINE, A DISTANCE OF 145.11 FEET TO A THE BEGINNING OF A CURVATURE CURVE CONCAVE TO THE SOUTH, HAVING A A CENTRAL ANGLE OF 25°08'56" AND A RADIUS OF 500.00 FEET; THENCE RUN ALONG WESTERLY ALONG THE ARC OF SAID CURVE FOR AN ARC DISTANCE OF 219.46 FEET TO A POINT OF TANGENCY; THENCE SOUTH 52°32'22" WEST, ALONG SAID RIGHT OF WAY, A DISTANCE OF 69.77 FEET TO A BEGINNING OF A CIRCULAR CURVE CONCAVE TO THE NORTHEAST, HAVING A CENTRAL ANGLE OF 128°48'22" AND A RADIUS OF 25 FEET; THENCE RUN WESTERLY, NORTHWESTERLY ALONG THE ARC OF SAID CURVE, A DISTANCE OF 56.20 FEET; THENCE NORTH 88°39'15" WEST, A DISTANCE OF 10.00 FEET TO A POINT THAT LIES 25 FEET EAST OF THE WEST LINE OF THE SOUTHWEST 1/4 OF SAID SECTION 17; THENCE NORTH 01°20'45" EAST, ALONG THE EAST RIGHT OF WAY LINE OF HARTMAN ROAD, A DISTANCE OF 61.92 FEET; THENCE NORTH 89°46'21" EAST, A DISTANCE OF 20.01 FEET; THENCE NORTH 01°20'45" EAST, A DISTANCE OF 347.23 FEET TO THE POINT OF BEGINNING.

SAID PARCEL LYING IN THE CITY OF FORT PIERCE, ST. LUCIE COUNTY, FLORIDA CONTAINING 138008.45 SQUARE FEET OR 3.07 ACRES, MORE OR LESS.

HAS CAUSED THE SAME TO BE SURVEYED AND PLATTED AS SHOWN HEREON AND DOES HEREBY DEDICATE AS FOLLOWS:

1. TRACT 'A' AS SHOWN HEREON, IS HEREBY DEDICATED TO ST. LUCIE COUNTY, FLORIDA FOR THE PERPETUAL USE OF THE PUBLIC FOR ROADWAY PURPOSES.

2. INGRESS/EGRESS EASEMENT AS SHOWN HEREON, IS HEREBY DEDICATED TO THE OWNERS OF LOT 1 AND LOT 2 FOR THE BENEFIT OF INGRESS AND EGRESS

3. THE DRAINAGE EASEMENT AS SHOWN HEREON, IS HEREBY DEDICATED FOR STORMWATER PURPOSES FOR THE BENEFIT OF LOT 2 THROUGH LOT 1.

IN WITNESS WHERE OF, SMIGIEL PARTNERS XIX, LTD., HAS CAUSED THESE PRESENTS TO BE SIGNED BY _____ OF CDA HOLDINGS, LLC, AND WITH THE AUTHORITY OF ITS BOARD OF DIRECTORS THIS ____ DAY OF _____, 2017.

BY:_____

## ACKNOWLEDGMENT AS TO CERTIFICATION OF DEDICATION:

STATE OF FLORIDA
COUNTY OF ST. LUCIE

THE FOREGOING INSTRUMENT WAS ACKNOWLEDGED BEFORE ME THIS ____ DAY OF _____, 2017. BY, _____, _____ OF CDA HOLDINGS, LLC.

WHO IS PERSONALLY KNOWN TO ME OR HAS PRODUCED A DRIVER'S LICENSE AS IDENTIFICATION.

NOTARY PUBLIC: _____ COMMISSION#: _____

PRINTED NAME: _____ MY COMMISSION EXPIRES: _____

## TITLE CERTIFICATION:

I, _____, AN ATTORNEY DULY LICENSED IN THE STATE OF FLORIDA, DO HEREBY CERTIFY THAT AS OF _____, 2017.__

1. APPARENT RECORD TITLE TO THE LAND DESCRIBED AND SHOWN ON THIS PLAT OF DOLLAR TREE AT OKEECHOBEE AND HARTMAN IS IN THE NAME OF THE ENTITIES AND/OR PERSONS EXECUTING THE DEDICATION HEREON.

2. ALL RECORDED MORTGAGES, NOT SATISFIED OR RELEASED OF RECORD, ENCUMBERING THE LAND DESCRIBED HEREON ARE LIST AS FOLLOWS: NONE.

PURSUANT TO FLORIDA STATUTE, 197.192, ALL TAXES HAVE BEEN PAID THROUGH THE YEAR 2016.

DATED ____ DAY OF _____, 2017

BY: _____

## CITY ATTORNEY:

IT IS HEREBY CERTIFIED THAT THE FOREGOING PLAT IS APPROVED AS TO FORM AND LEGAL SUFFICIENCY.

BY: _____
JAMES M. MESSER
CITY ATTORNEY
CITY OF FORT PIERCE, FLORIDA

## CITY COMMISSION CERTIFICATE:

STATE OF FLORIDA
COUNTY OF ST. LUCIE

PURSUANT TO THE PROVISIONS OF THE FORT PIERCE COMMISSION. THIS PLAT WAS GIVEN FINAL APPROVAL BY THE CITY COMMISSION AT A MEETING HELD ON THE ____ DAY OF _____, 2017.

THIS ____ DAY OF _____, 2017.

FORT PIERCE CITY COMMISSION

BY: _____
LINDA COX, CITY CLERK

## SURVEYOR'S NOTES:

1. THIS PLAT, AS RECORDED IN ITS GRAPHIC FORM, IS THE OFFICIAL DEPICTION OF THE SUBDIVIDED LANDS DESCRIBED HEREIN AND WILL IN NO CIRCUMSTANCES BE SUPPLANTED IN AUTHORITY BY ANY OTHER GRAPHIC OR DIGITAL FORM OF PLAT.
2. THERE MAY BE ADDITIONAL RESTRICTIONS THAT ARE NOT RECORDED ON THIS PLAT THAT MAY BE FOUND IN THE PUBLIC RECORDS OF THIS COUNTY.
3. THERE SHALL BE NO BUILDING OR ANY OTHER KIND OF CONSTRUCTION, OR PLACEMENT OF TREES OR SHRUBS UTILITY AND DRAINAGE EASEMENTS.
4. BEARINGS SHOWN HEREON ARE REFERENCED TO THE EAST RIGHT OF WAY LINE OF HARTMAN ROAD, N01°20'45"E.
5. PLAT CONTAIN: 138008.45 SQUARE FEET OR 3.17 ACRES, MORE OR LESS.
6. PLAT CONTAINS 2 LOTS.
7. PER CHAPTER 177, FLORIDA STATUTES, ALL PLATTED UTILITY EASEMENTS SHALL PROVIDE THAT SUCH EASEMENTS SHALL ALSO BE EASEMENTS FOR THE CONSTRUCTION, INSTALLATION, MAINTENANCE, AND OPERATION OF CABLE TELEVISION SERVICES; PROVIDED, HOWEVER, NO SUCH CONSTRUCTION, INSTALLATION, MAINTENANCE, AND OPERATION OF CABLE TELEVISION SERVICES SHALL INTERFERE WITH THE FACILITIES AND SERVICES OF AN ELECTRIC, TELEPHONE, GAS OR OTHER PUBLIC UTILITY. IN THE EVENT A CABLE TELEVISION COMPANY DAMAGES THE FACILITIES OF A PUBLIC UTILITIES, IT SHALL BE SOLELY RESPONSIBLE FOR THE DAMAGES. THIS SECTION SHALL NOT APPLY TO THOSE PRIVATE EASEMENTS GRANTED TO OR OBTAINED BY A PARTICULAR ELECTRIC, TELEPHONE, GAS OR OTHER PUBLIC UTILITY. SUCH CONSTRUCTION, INSTALLATION, MAINTENANCE, AND OPERATION SHALL COMPLY WITH THE NATIONAL ELECTRICAL SAFETY CODE AS ADOPTED BY THE FLORIDA PUBLIC SERVICE COMMISSION.

## CLERK'S CERTIFICATION:

STATE OF FLORIDA
COUNTY OF ST. LUCIE

I, JOSEPH E. SMITH, CLERK OF THE CIRCUIT COURT OF ST. LUCIE COUNTY, FLORIDA, DO HEREBY CERTIFY THAT I HAVE EXAMINED THIS PLAT OF DOLLAR TREE AT OKEECHOBEE AND HARTMAN, AND THAT IT COMPLIES WITH ALL THE REQUIREMENTS OF CHAPTER 177 OF THE LAWS OF FLORIDA. THIS PLAT FILED FOR RECORD THIS _____ DAY OF _____, 2017 AND RECORDED ON PAGE ____ OF PLAT BOOK _____ IN THE OFFICE OF THE CIRCUIT COURT OF ST. LUCIE COUNTY, FLORIDA.

JOSEPH E. SMITH, CLERK OF THE CIRCUIT COURT

BY: _____
CLERK OF THE CIRCUIT COURT
ST. LUCIE COUNTY, FLORIDA

## PLANNING AND DEVELOPMENT SERVICES APPROVAL:

IT IS HEREBY CERTIFIED THAT THIS PLAT MEETS AND MINIMUM LOT DIMENSION REQUIREMENT OF THE C-3 ZONING DISTRICT, AS SET FORTH IN SECTION 0.01.00 OF THE CITY OF FORT PIERCE DEVELOPMENT CODE.

THIS ____ DAY OF _____, 2017

BY: _____
REBECCA GROHALL
DIRECTOR OF PLANNING, PLANNING DEPARTMENT
FORT PIERCE, FLORIDA

## SURVEYOR'S REVIEW CERTIFICATE:

STATE OF FLORIDA
COUNTY OF ST. LUCIE

IT IS HEREBY CERTIFIED THAT THE UNDERSIGNED SURVEYOR AND MAPPER DULY LICENSED IN THE STATE OF FLORIDA HAS REVIEWED THIS PLAT FOR CONFORMITY WITH THE REQUIREMENTS OF CHAPTER 177, PART 1, FLORIDA STATUTES.

_____ DATE:_____
GREGORY S. FLEMING, PROFESSIONAL SURVEYOR AND MAPPER
FLORIDA REGISTRATION NO. 4350
PLAT REVIEWER FOR CITY OF FORT PIERCE, FLORIDA

## SURVEYOR'S CERTIFICATE:

KNOW ALL MEN BY THESE PRESENTS, THAT THE UNDERSIGNED, BEING A LICENSED AND REGISTERED SURVEYOR AND MAPPER, DOES HEREBY CERTIFY THAT ON _____, HE COMPLETED THE SURVEY OF LANDS AS SHOWN IN THE FOREGOING PLAT; THAT SAID PLAT IS A CORRECT REPRESENTATION OF THE LANDS THEREIN DESCRIBED AND PLATTED OR SUBDIVIDED; THAT PERMANENT REFERENCE MONUMENTS AND ALL CORNERS WILL BE PLACED AS SHOWN THEREON AS REQUIRED BY CHAPTER 177, PART 1, FLORIDA STATUTES, AS AMENDED, AND THAT SAID LAND IS LOCATED IN ST. LUCIE COUNTY, FLORIDA.

_____
CRAIG D. WATSON
PROFESSIONAL LAND SURVEYOR
FLORIDA REGISTRATION NO. 5647

# DOLLAR TREE AT OKEECHOBEE AND HARTMAN

BEING A PORTION OF SECTION 17, TOWNSHIP 35 SOUTH, RANGE 40 EAST
CITY OF FORT PIERCE, ST. LUCIE COUNTY, FLORIDA.

THIS INSTRUMENT WAS PREPARED BY:
WATSON | KILLANE SURVEYING AND MAPPING, INC.
2240 NORTHEAST DIXIE HIGHWAY
JENSEN BEACH, FLORIDA 34957
PHONE: NO. (772) 334-0868 - EMAIL: WATSONKILLANE@GMAIL.COM

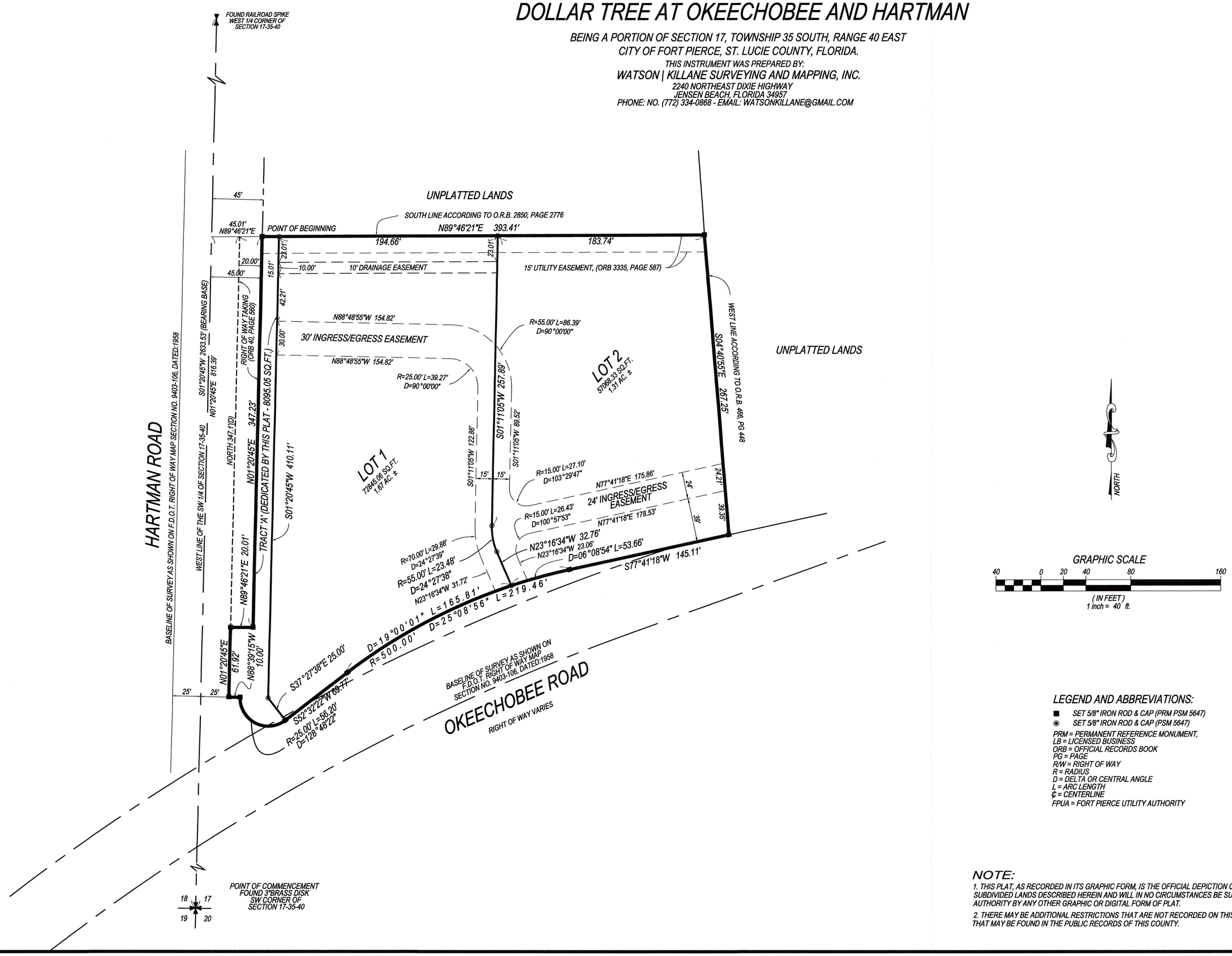


## LEGEND AND ABBREVIATIONS:

- ■ SET 5/8" IRON ROD & CAP (PRM PSM 5647)
- ◉ SET 5/8" IRON ROD & CAP (PSM 5647)

PRM = PERMANENT REFERENCE MONUMENT,
LB = LICENSED BUSINESS
ORB = OFFICIAL RECORDS BOOK
PG = PAGE
R/W = RIGHT OF WAY
R = RADIUS
D = DELTA OR CENTRAL ANGLE
L = ARC LENGTH
℄ = CENTERLINE
FPUA = FORT PIERCE UTILITY AUTHORITY

## NOTE:

1. THIS PLAT, AS RECORDED IN ITS GRAPHIC FORM, IS THE OFFICIAL DEPICTION OF THE SUBDIVIDED LANDS DESCRIBED HEREIN AND WILL IN NO CIRCUMSTANCES BE SUPPLANTED IN AUTHORITY BY ANY OTHER GRAPHIC OR DIGITAL FORM OF PLAT.

2. THERE MAY BE ADDITIONAL RESTRICTIONS THAT ARE NOT RECORDED ON THIS PLAT THAT MAY BE FOUND IN THE PUBLIC RECORDS OF THIS COUNTY.

THE SUNRISE CITY FORT PIERCE Florida

**4008 Okeechobee Road - Site Aerial**

N W E S

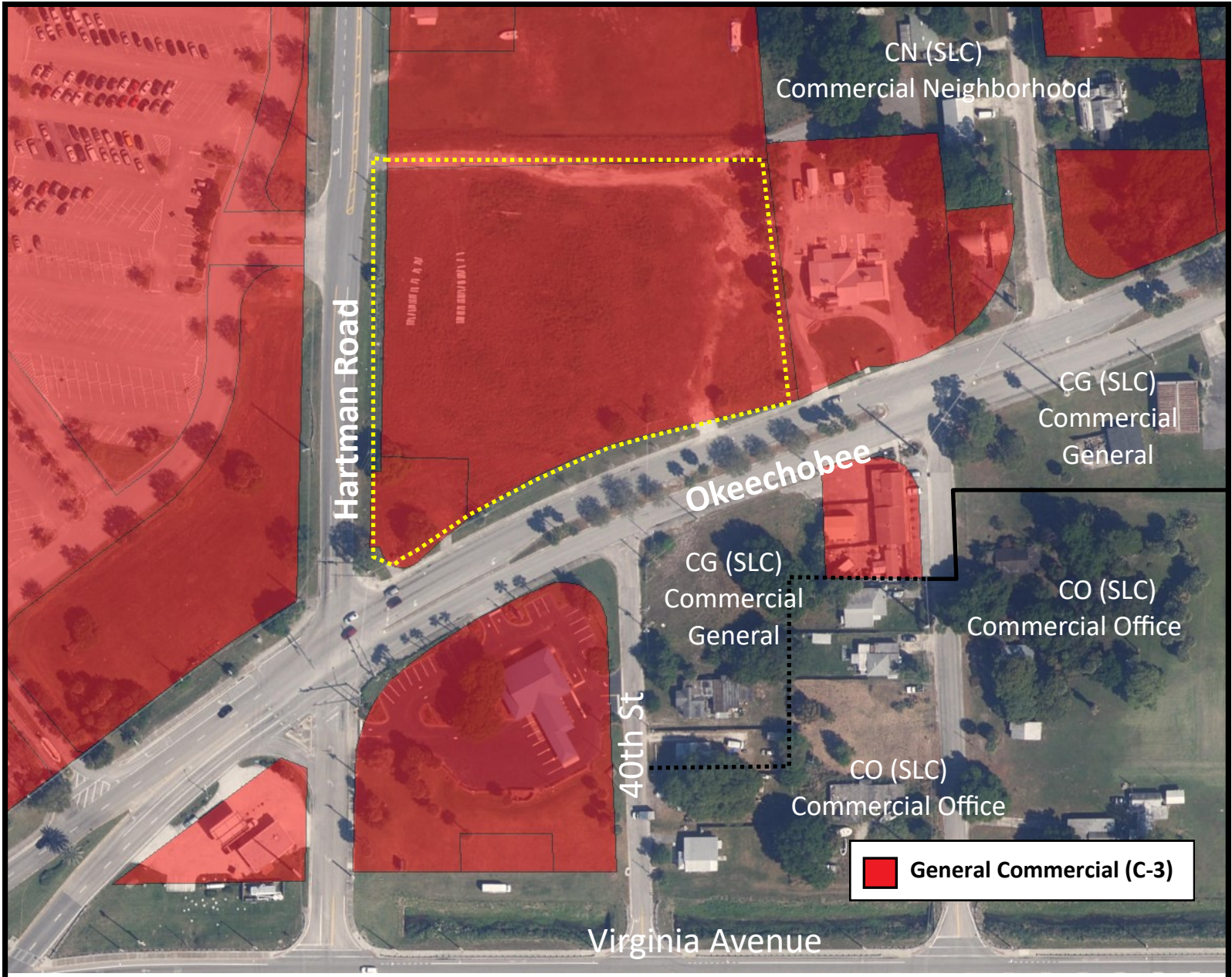


THE SUNRISE CITY FORT PIERCE Florida

**4008 Okeechobee Road—Zoning Map**

**City Commission Regular Meeting** **13.a.**

**Meeting Date:** 01/02/2018

**Re:** Housing Authority Appointment

**Submitted For:** Linda Cox, City Clerk, City Clerk

---

**SUBJECT:**

Resolution 18-R01 approving the Mayor's reappointment of Patricia Diaz to the Housing Authority Board.

**SUMMARY:**

The Mayor is recommending the reappointment of Ms. Patricia Diaz to the Fort Pierce Housing Authority.

**RECOMMENDATION:**

Approve Resolution

**ALTERNATIVES:**

Staff will proceed as directed by the City Commission

**RESPONSIBLE STAFF:**

Linda W. Cox, City Clerk

**COORDINATED WITH:**

Linda Hudson, Mayor

---

## Fiscal Impact

**OTHER INFORMATION:**

No fiscal impact.

---

## Attachments

18-R01

Reappointment Request

---

## Form Review

| Inbox | Reviewed By | Date |
|---|---|---|
| City Manager | Nick Mimms | 12/22/2017 09:02 AM |

Form Started By: Linda Cox

Started On: 11/16/2017 02:06 PM

Final Approval Date: 12/22/2017

**RESOLUTION NO. 18-R01**

A RESOLUTION OF THE CITY COMMISSION OF THE CITY OF FORT PIERCE, FLORIDA, CERTIFYING THE MAYOR'S REAPPOINTMENT OF **PATRICIA DIAZ AS A COMMISSIONER OF THE HOUSING AUTHORITY** OF THE CITY OF FORT PIERCE; PROVIDING FOR AN EFFECTIVE DATE.

BE IT RESOLVED By the City Commission of the City of Fort Pierce, Florida, in regular session assembled, pursuant to the provisions of Chapter 421, "Housing Authority Law", Florida Statutes, that the Mayor's reappointment of Patricia Diaz as a Commissioner of the Housing Authority of the City of Fort Pierce, Florida, be and the same is hereby approved; said term to commence upon adoption of this resolution, and to expire on February 2, 2022, or when her successor has been duly appointed.

BE IT FURTHER RESOLVED that this Resolution shall become effective upon adoption.

IN WITNESS WHEREOF, this Resolution has been duly adopted this 3rd day of January, 2017.

_____
LINDA HUDSON, MAYOR

ATTEST:

_____
LINDA W. COX, CITY CLERK

(CITY SEAL)

APPROVED AS TO FORM
AND CORRECTNESS:

_____
JAMES MESSER, CITY ATTORNEY

511 Orange Avenue, Fort Pierce, Florida 34950
(772) 461-7281 TDD: (800) 545-1833 ext. 902

RECEIVED
NOV 14 2017
MAYOR'S OFFICE

November 13, 2017

The Honorable Linda Hudson, Mayor
City of Fort Pierce, Florida
City Hall
100 North US Highway 1
Fort Pierce, Florida 34950

Via Hand Delivery

**Re: The Housing Authority of the City of Fort Pierce, Florida (FPHA)**
**Reappointment of Board of Commissioner, Patricia Diaz**

Dear Mayor Hudson:

It has come to my attention that my present term as a FPHA Commissioner expires on February 2, 2018. It is the intent of this correspondence to request reappointment to the position for another term.

I would be grateful for the opportunity as I believe the Authority has and is making great strides in providing decent, safe and affordable housing options to the constituents of the City of Fort Pierce. I have thoroughly enjoyed my experiences on the Board and would welcome the honor of serving my fellow residents in the same capacity, if you so desire me to.

I appreciate your consideration of this request and am happy to answer any questions you might have concerning such.

Thank you.

Sincerely,

Patricia Diaz
FPHA Commissioner

cc: Mr. William Nunn, Chairperson, FPHA
Ms. Andrea Kochanowski, Executive Director, FPHA

William Nunn, Chairperson | Sheila Bradley, Vice-Chair | Linda Cutler, Commissioner | Patricia Diaz, Commissioner | JoAnn Parrish, Commissioner

Andrea Kochanowski, Executive Director

**City Commission Regular Meeting** **13.b.**

**Meeting Date:** 01/02/2018

**Re:** Mayor Pro Tem

---

**SUBJECT:**

Selection of Mayor Pro Tem, pursuant to Section 23 of the City Charter which requires the city commissioners to shall select one (1) of their number as Mayor Pro Tem at the first regular meeting following January 1.

**SUMMARY:**

The individual elected shall act as mayor-commissioner and have all of the powers and duties of that office during the absence or disability of the said mayor-commissioner. The following have served as Mayor Pro Tem:

2017 - Commissioner Sessions
2016 - Commissioner Perona
2015 - Commissioner Alexander
2014 - Commissioner Becht
2013 - Commissioner Sessions
2012 - Commissioner Perona
2011 - Commissioner Alexander
2010 - Commissioner Becht

**RECOMMENDATION:**

Using the traditional rotation, Commissioner Johnson would be next in line to serve as Mayor Pro Tem.

**ALTERNATIVES:**

Select another Commissioner to Serve

**RESPONSIBLE STAFF:**

Linda W. Cox, City Clerk

**COORDINATED WITH:**

n/a

---

**Fiscal Impact**

**OTHER INFORMATION:**

No fiscal impact.

---

**Form Review**

| Inbox | Reviewed By | Date |
|---|---|---|

| | | |
|---|---|---|
| City Manager | Nick Mimms | 12/22/2017 09:01 AM |

Form Started By: Linda Cox Started On: 12/19/2017 10:57 AM

Final Approval Date: 12/22/2017

**City Commission Regular Meeting** **15.a.**

**Meeting Date:** 01/02/2018

**Re:** City Manager's Report

**Submitted For:** Nick Mimms, City Manager, City Manager

**SUBJECT:**

City Manager's Report

## Attachments

City Manager's Report - January

## Form Review

| Inbox | Reviewed By | Date |
|---|---|---|
| City Manager | Nick Mimms | 12/22/2017 09:03 AM |
| City Manager | Nick Mimms | 12/22/2017 09:03 AM |

Form Started By: Jennifer Robinson

Started On: 12/14/2017 01:25 PM

Final Approval Date: 12/22/2017

# SUNRISE CITY
## SPECTRUM

FORT PIERCE, FL
THE SUNRISE CITY

JANUARY 2018

# TABLE OF CONTENTS

FEATURED ..... 3

POLICE DEPARTMENT ..... 5

PLANNING DEPARTMENT ..... 7

BUILDING DEPARTMENT ..... 10

PUBLIC WORKS DEPARTMENT ..... 12

INDIAN HILLS GOLF COURSE ..... 14

FORT PIERCE CITY MARINA ..... 15

SUNRISE THEATRE ..... 16

CITY CLERK | NEW BUSINESSES ..... 18

UPCOMING EVENTS ..... 19

# All Aboard!!!

Joe Sweat
City Manager's Office

Christmas in the Fort was nothing short of magical. There were so many activities to participate in our holiday season. From the Dancing Palms (Holiday Lights Spectacular) in Marina Square, to the Sights and Sounds Parade on 2nd Street, we couldn't be more excited to see our streets filled each night. Even Christmas on Moore's Creek had over 1000 kids enjoying the festivities and waiting for an unwrapped donated toy. It was an amazing time to be in Fort Pierce for Christmas, especially if you got the chance to take the trolley tour!

The City of Lights Contest kicked off at the end of November and we were eager to see the displays of lights illuminate our beautiful city for the Holidays. This year however, we added a trolley tour for the City of Lights finalists, and "Oh what fun it is to ride!" Twelve City of Lights finalists consisting of residences and businesses made up the route. Registration filled up fast, so we created more time slots to meet the demands and offer more tours for

> *THE TROLLEY RIDE WAS LIKE A MAGICALLY, YET CORNY HALLMARK MOVIE.*

others to enjoy.
The trolley tour began downtown at Marina Square where everyone met and checked in. The registration table, decorated by Kaitlyn Ballard from the City Manager's office, hosted an assortment of holiday treats such as, candy canes, hot cocoa and cookies while people waited to board the trolley. Our surprise guests, Mr. and Mrs. Claus, were there to help brighten the night and even made time for pictures before their big journey.

The trolley was decorated from the inside out by our Public Works Department. Blinking whites lights and a wreath brightened the outside of the trolley while garland and jingle bells decorated the inside inviting everyone to get into the Christmas spirit. The hosts, Shyanne Helms and Joe Sweat, entertained everyone with Christmas trivia, Santa jokes, and of course, Christmas carols though they didn't sing alone. One woman said "The trolley ride was like a magical, yet comical Hallmark movie."

It was an exciting time in Fort Pierce during the Holiday Season and we look forward to new and exciting adventures in 2018. We especially look forward to next year's trolley tours in hopes that you will join us! Subscribe to our website for up to date information at:
www.CityOfFortPierce.com

Vennis Gilmore and Caleta Scott

# To Honor & Serve

*Fort Pierce Police Department*

## Fort Pierce Elks Club 1520 continues helping kids at PAL

Fort Pierce Elks 1520 recently donated $2,000 from a grant to FPPD's Police Athletic League. Adults in the photo are: (Front row) Boxing Coach Tom Caruso, Elks Lodge member Lenny Smallacombe, Chief Diane Hobley-Burney, Boxing Coach Ken Wilson, PAL Executive Director Officer Paul Pearson; (Back row) Barbara Smallacombe and Deputy Chief Frank Amandro. The Elks Club is a community partner that the FPPD is always honored to work with. Their generosity towards PAL and the children of Fort Pierce is greatly appreciated.

## Officers deliver 200 meals for Thanksgiving

Officers from the Fort Pierce Police Department (FPPD) along with members of the Lincoln Park Community Observation Patrol (C.O.P.) helped to collect and deliver 200 meals to local community members who needed a helping hand on Thanksgiving. At FPPD, it's always an honor to serve our citizens.

## Detective Quintao reaches new audience with FPPD's message

Detective Mila Quintao recently did a live on-air interview at Rádio Achei to talk about firearm awareness and Florida Law. Radio Achei is a Brazilian station that broadcasts in Portuguese and brings awareness to many important topics for the Brazilian community within Fort Pierce. Detective Quintao, who speaks Portuguese, made a direct connection on these important and complicated subjects.

## Three recent FPPD retirees recognized by Commission for years of contributions to the City

Congratulations to FPPD Lieutenant Katherine England, Sergeant Rodney Nieves and Sergeant Dan Flaherty. They all retired recently from the FPPD after many years of outstanding service to the people of Fort Pierce. They were recognized at the Fort Pierce City Commission meeting with proclamations recognizing their numerous achievements throughout the years. They also were given an engraved wooden keepsake box by Chief Hobley-Burney and the Deputy Chiefs. The department wishes them well in their retirement.

## K9 Lotto enjoying great popularity with public

FPPD K9 received a generous donation recently from citizen Charles Mineo, who wants to make sure we take great care of our four-legged partner, Lotto. As one of FPPD's most popular members, Lotto inspires a lot of people, but costs for such a high-quality dog add up quickly. Because Lotto is so important to the department, the community and to his handler, Officer Tad Lindstadt, he was issued a new Kevlar protective vest. It was paid for entirely by donations from members of the Fort Pierce Yacht Club and other citizens just to make sure he stays safe while protecting the community.

FPPD greatly appreciates Mr. Mineo's thoughtful generosity, as well as Abigayle Lindstrom for her efforts to gather donations for the vest.

# NEW BEGINNINGS

## *Fort Pierce Planning Department*

Staff from the City Planning Department attended the grand opening of the new Aldi grocery store. Aldi first approached the City in spring 2017 to build the store, were guided by Staff through the site plan process with a successful approval from City Commission. Aldi had a fast paced construction schedule with the target goal to be open by mid-December. Despite some setbacks from Hurricane Irma, City staff partnered with Aldi corporate staff to ensure the store would be open. This morning, for the grand opening, hundreds of Fort Pierce residents lined up to be the first in the store - receiving gift cards and the chance to win free produce for the year!

## FPRA BOAT RAMP

To the delight of fishing vessels, tourists and pelicans - the boat ramp at Fisherman's Wharf reopened to the public. The boat ramp had been closed to the public for a short period following the Hurricane. Fisherman's Wharf is a property owned by the Fort Pierce Redevelopment Agency and a focal point for redevelopment.

## RADICAL COSMETICS

Radical Cosmetics readies for their opening of the cosmetics manufacturer in the former FPRA Building at 1401 N 2nd Street. In addition to a freshly painted building, they have added decorative stucco and exterior finish, installed new landscaping and new lighting to enhance the building's exterior.

3rd Annual

# ART SHOW & FESTIVAL

# Highwaymen

## HERITAGE TRAIL

## Saturday, February 17, 2018 ~ 10am-4pm

**Moore's Creek Linear Park ~ 8th Street & Avenue D, Fort Pierce, Florida**

**Save the Date ~ Save the Date ~ Save the Date**

5520 Glades Cut-Off Rd.- Organic Laboratories has relocated from Stuart to Fort Pierce. Organic Laboratories is an established manufacturer of organic pesticides and fertilizers with products sold at most major retailers. The picture of the production area was taken by Building Department Coordinator Coss, during their business tax inspection.

2710 S US Hwy 1- The Immunotek plasma donation center is nearing completion. Signage and landscaping has recently been installed. Final inspections should be scheduled in the near future. This picture was taken during a tie beam inspection.

## BUILDING PERMIT ACTIVITY REPORT

NOVEMBER 2017

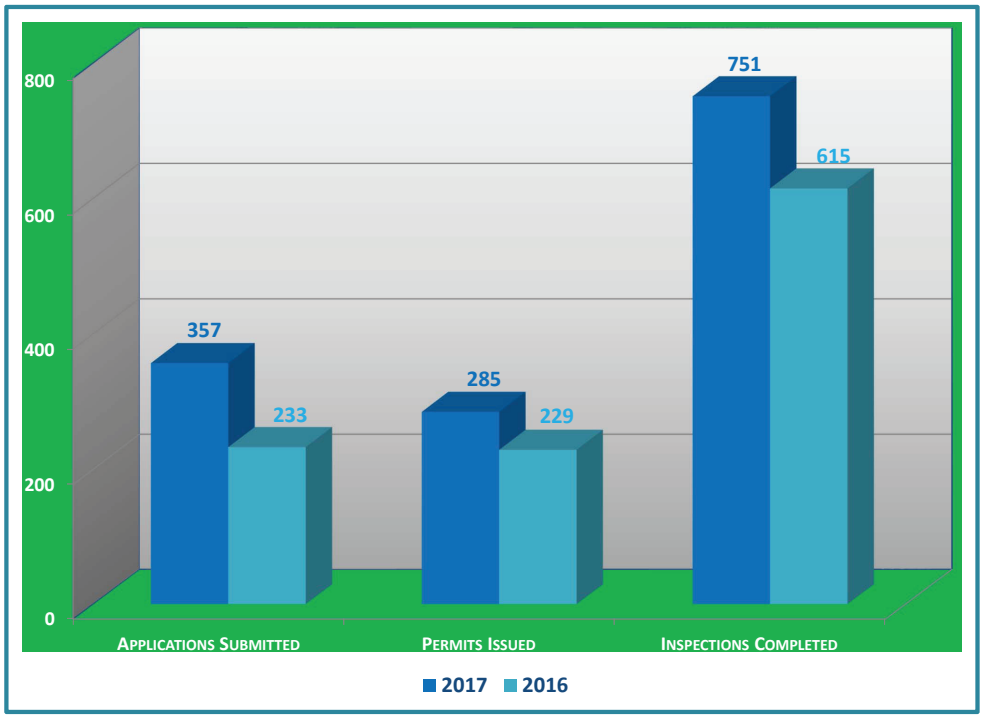


## PLAN REVIEW PROCESSING TIME

For permits with 0 days, either the review was not completed within the month, or there were no reviews for the entire month.

NOVEMBER 2017

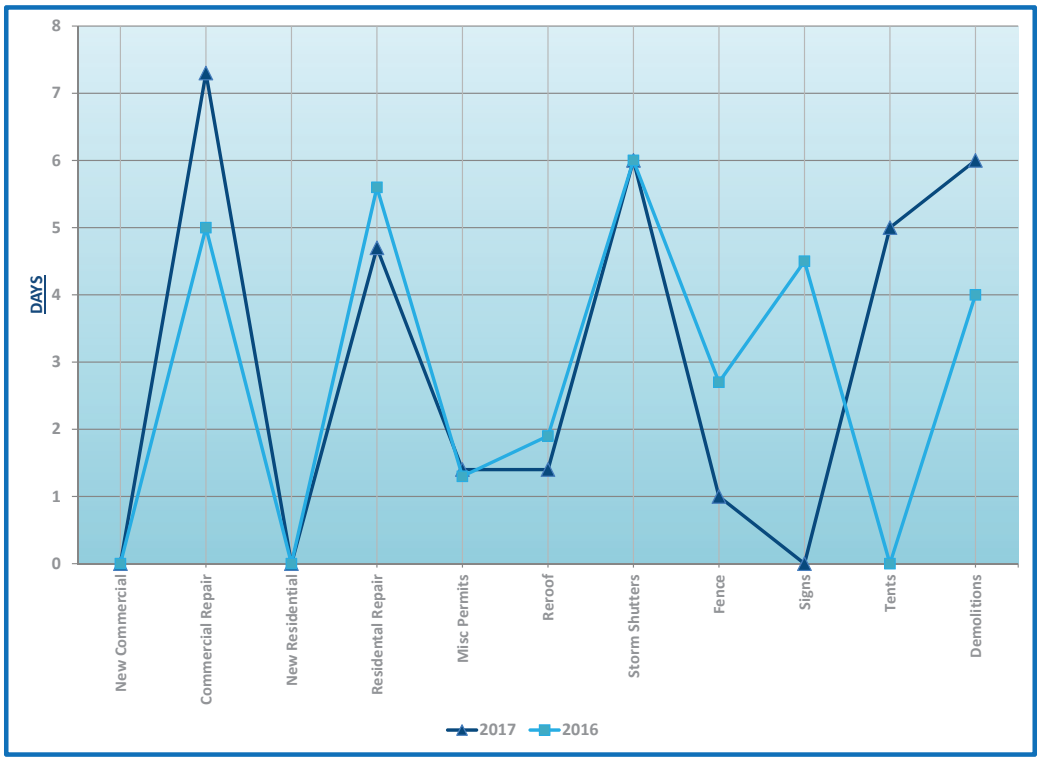

# *Moving Forward*

Mike Reals, Public Works Director

Public Works was challenged yet again this year by another powerful hurricane named Irma. Though the City of Fort Pierce escaped the eye of the storm our city's beautiful landscape was put to the test. The city lost numerous large trees and many shrubs citywide. As the year ends our Public Works Team continues to replace and refurbish the landscaping. Recently our team has completed the installation of new landscaping at Marina Square. We are currently working in some of our main thoroughfares and Indian Hills Recreation Area.

Hurricane Irma created quite a few challenges for the Public Works Department. One significant challenge was the installation of all the holiday decorations throughout the entire city. Our decorating team started to plan the strategy for installation of the holiday lights when we quickly realized that numerous street lights were missing and most of the electrical outlets we used for decorating were not functioning correctly due to the hurricane. The team's first step was to make sure we had power in all the right places this insured that all of the decorations functioned correctly. Our team spent a few early mornings installing all of the holiday decorations by our deadline in late November.

This year in addition to our standard holiday decorations Public Works added snowflake projector lights on 2nd Street and Orange Avenue, permanent light outlets on Georgia Avenue Round-about and a 22' Christmas tree in 13th Street Plaza on Avenue D. Thank you team! It truly is amazing working side by side with you to Keep Fort Pierce Beautiful.  This year the team's goal is to bring holiday joy to all of our citizens and guests for the holiday season.

## UPCOMING RIVER WALK CENTER EVENTS:

January 5th - Friday Fest - Marina Square 5:00 - 9:00 | Friday Fest Extension
N 2nd Street in front of Sailfish Brewery 7:00 pm - 2:00 am

January 14th - Lions Club Ft Pierce - Marathon & 5K - Riverwalk Center - 6:30am

January 15th - MLK Parade - 25th Street Ave Q to Quincy Ave 10:00 - 3:00 pm

January 20th - St. Lucie County Yard Sale - Lawnwood Stadium Parking Lot - 8:00 am - 2:00 pm

January 13th - Chow Down Food Truck - Old Amphitheatre Site - 4:30 - 9:00 pm

January 27th - Groovin & Tastin - Parking Garage - 1:00 - 5:00 pm

## RIVER WALK CENTER SALES REPORT NOVEMBER 2017

| | |
|---|---|
| CLASSES | $1,664.94 |
| PARK PERMITS | $ 1,287.50 |
| SPECIAL EVENTS | $1,375.00 |
| GARDEN CENTER | $ 1,325.00 |
| MARAVILLA CENTER | $ 1,050.00 |
| OLD CITY HALL | $ 1,465.00 |
| RIVER WALK CENTER | $ 3,039.41 |
| **TOTAL** | **$11,206.85** |

# Holiday Swing

Daniel Visconti, IHGC Manager

Happy Holidays! If you're just getting back in town or haven't played The Hills in a while, we look forward to seeing you back! We know you'll be impressed with the drastically improved conditions and attitude throughout the facility.

We have quickly changed the culture of the facility by providing a warm and friendly environment! It will be one that players of all ages and backgrounds can feel comfortable being a part of. We strive to provide a neat and tidy look as well as a fun, professional staff here to greet you every round. We have already welcomed back several leagues and groups that had played here in the past, but had left for various reasons.

We have already added Men's and Women's Footjoy shoes, as well as golf clubs and bags from Tour Edge. We will be offering clubs, balls and bags from Callaway Golf shortly after the holidays. Golf shirts and casual tee shirts have been flying off the shelves as the holidays approach. We look forward to carrying various items to cover all of your golfing needs.

You will begin to notice a greater advertising presence focusing on our "new" Indian Hills through print, radio and a new TV commercial which will air on Comcast spanning several channels.

From a revenue standpoint, we are already up approximately 2,000 rounds and approximately $30,000 over last year covering the same period of October 1 through December 19. The weather has been spectacular lately and hopefully Mother Nature will continue to cooperate with a fantastic winter for us!

We will welcome any suggestions you may offer in an attempt to improve our operation. We ask your cooperation in spreading the word within the community through both social media and word of mouth, our greatest form of advertising.

## INDIAN HILLS SALES REPORT

| | 10/2017 | 11/2017 |
|---|---|---|
| GOLF ROUNDS | 2161 | 2738 |
| GOLF FEES | $37,978.47 | $56,124.06 |
| RANGE TOKENS | $319.13 | $857.03 |
| MEMBERSHIP PASS | $4,100.00 | $2,890.00 |
| FOOD & BEVERAGES | $2,521.01 | $4,366.64 |
| MERCHANDISE | $1,715.67 | $2,848.75 |
| TOTAL | $46,634.28 | $67,086.48 |

# CITY MARINA FINANCIAL REPORT

| | SEPTEMBER | OCTOBER | NOVEMBER |
|---|---|---|---|
| Dockage Reservations | 48 | 84 | 200 |
| Monthly Dockage | $92,360.09 | $120,206.26 | $142,171.57 |
| Transient Dockage | $21,315.10 | $28,570.25 | $43,499.45 |
| Electricity | $1,710.47 | $2,850.14 | $13,379.15 |
| Retail | $6,826.26 | $7,258.65 | $6,165.10 |
| Gas Sales | $17,247.25 | $12,004.49 | $20,522.32 |
| Diesel Sales | $29,841.28 | $35,116.50 | $94,829.98 |
| TOTALS | $169,300.45 | $204,207.61 | $320,569.57 |

For the 11th year the Sunrise Theatre along with the Sunrise Theatre Foundation has committed to provide students in the four-county area the opportunity to attend live theatrical performances. These performances are offered free of charge including bus transportation.

The School Time Performances offer current, challenging and artistically diverse programming performed by international, national and regional artists and theatrical companies. For some students, it is their first time seeing a live performance and for others yet another glimpse into the world of education, brought to life.

The Sunrise Theatre filled the house at the School Time Performances of The Martial Artists & Acrobats of Tianjin, The People's Republic of China, on Friday, December 1, and St. Lucie Ballet's The Nutcracker on Friday, December 8. These performances were filled with area students in grades kindergarten through 12th grade.

The 2017/18 Annual Sunrise Theatre Volunteer Holiday Reception was held at the Black Box on Monday, December 11. Over 165 volunteer ushers, bartenders, Advisory and Foundation Board members and members of the City Commission attended the event. They are treated to an evening of holiday music, cocktail reception with hors d'oeurves and then served dinner and dessert by the Sunrise Theatre staff. This event is held to show appreciation to the volunteer staff for all of their support throughout the year.

## SUNRISE THEATRE FINANCIAL REPORT

| Date | Show | Attendance | Total Expense | Total Revenue | Gain/(Loss) |
|---|---|---|---|---|---|
| 11/17 | Australian BeeGee's | 582 | $19,178.64 | $25,615.86 | $6,437.22 |
| 11/18 | On the Verge / Tom Jackson | 67 | $1,067.12 | $1,688.80 | $621.68 |
| 11/26 | Tango Buenor Aires | 236 | $26,364.73 | $12,136.00 | ($14,288.73) |

| Date | Rental | Attendance | Total Expense | Total Revenue | Gain/(Loss) |
|---|---|---|---|---|---|
| 11/4 | Najee (Alpha Kappa Alpha) | 378 | $3,446.57 | $7,594.00 | $4,147.43 |
| 11/17 | Kara Grainger & Skyla Burrell | 107 | $1,805.61 | $3,452.70 | $1,647.09 |
| 11/18 | Lip Sync | 629 | $985.82 | $3,937.00 | $2,951.18 |
| 11/19 | Dance For Food | NA | $503.28 | $1,230.00 | $726.72 |
| 11/22 | Show Time at Sunrise Theatre | 160 | $1,012.11 | $1,327.54 | $315.43 |
| 11/1~30 | Comedy Corner | 237 | $2,908.56 | $4,610.00 | $1,701.44 |
| 11/1~30 | Jazz Jam | 200 | $1,454.04 | $1,642.00 | $187.96 |
| | | TOTALS | $58,726.48 | $63,233.90 | $4,507.42 |

# WELCOME TO FORT PIERCE!

BALTIMORE, WESLEY | PROFESSIONS-EACH INDIVIDUAL

BARNES, M. VIRGINIA | MOTELS

BENJAMIN, BERNARD JR | PROFESSIONS-EACH INDIVIDUAL

BENTON CONSULTING, LLC | REAL ESTATE OFFICE
CENTRAL DME, INC | MERCHANT

CICERON, RALPH | PROFESSIONS-EACH INDIVIDUAL

DEWITT, ASHLEY | MERCHANT-NOT EXCEEDING $10,000

DORST, JENNIFER | BEAUTY SHOPS

DOULOS CONSTRUCTION INC | CONTRACTORS

E Z CUTS | BEAUTY SHOPS

EVEREST NATIONAL INSURANCE COM | INSURANCE

FRUTERIA COVARRUBIAS | MERCHANT

H. RODRIQUEZ CONSULTING ENGINE | ENGINEERS

INLET FISHERIES, INC. | FISH MRKT MERCHANT

ISLAND MARINE SURVEYORS LLC | UNCLASSIFIED

JETSET EVENTS LLC | MERCHANT

JPM FLORIDA HOLDINGS, LLC | MOTELS

LEXON INSURANCE COMPANY | INSURANCE

LILY ROSE FURNISHINGS, LLC | MERCHANT

MERAKI HAIR ARTISTRY LLC | BEAUTY SHOPS

NATIONAL MEDICAL COMPANY INC | MERCHANT

NEED A BRACE LLC | MERCHANT

PRESSURE WASHING CHRIS | UNCLASSIFIED

REDBOX AUTOMATED RETAIL, LLC | MOTION PICTURE AND VIDEO RENTAL

SERAPHIN, WAKENDY | PROFESSIONS

SHAH, PALAK DWEEPKUMAR | PROFESSIONS-EACH INDIVIDUAL

SHARP TOUCH CLEANING, LLC | CLEANING SERVICE

SMITH, JASON | TREE TRIMMING

SOPHIA MOBILE AUTO REPAIR | REPAIR/ SERVICEMEN

SPOTLESS CLEANING SERVICES | CLEANING SERVICE

ST. LUCIE INJURY AND HEALTH, LLC | MEDICAL CLINICS, OFFICES ETC.

STINGRAY MARINE ELECTRONICS, LLC | SECRETARIAL SERVICES

TAQUERIA TIERRA CALIENTE, LLC | VENDOR

WIRELESS VISION, LLC / T-MOBILE | TELECOMMUNICATIONS

ZAYAC, JOSEPH W. MOTELS | MOTEL

# FREE COMMUNITY EVENTS

| EVENT | DATE | TIME | LOCATION |
|---|---|---|---|
| FORT PIERCE FARMER'S MARKET | EVERY SATURDAY | 7:00 AM - 1:00 PM | MARINA SQUARE |
| GREEN MARKET | EVERY WEDNESDAY | 12:00 PM - 6:30 PM | MARINA SQUARE |
| AVENUE D MARKET | EVERY FRIDAY AND SATURDAY | 8:00 AM - 10:30 PM | AVENUE D PLAZA |
| HOLIDAY LIGHTS SPECTACULAR | DECEMBER TO JANUARY | 6:00 PM - 9:00 PM | MARINA SQUARE |
| CITY COMMISSION MEETING | 1/2 | 6:30 PM | CITY HALL |
| FRIDAY FEST | 1/5 | 5:30 PM - 9:00 PM | MARINA SQUARE |
| MLK GRAND PARADE | 1/9 | 6:30 PM - 8:30 PM | SEAWAY DRIVE |
| COFFEE WITH THE MAYOR | 1/19 | 8:00 AM - 9:00 AM | FORT PIERCE YACHT CLUB |
| CITY COMMISSION MEETING | 1/16 | 6:30 PM | CITY HALL |

**Mission Statement**

*To provide community leadership, quality public service, and a safe environment for all citizens, by an empowered team of employees motivated by pride in themselves and their work.*

WWW.CITYOFFORTPIERCE.COM ▪ FACEBOOK.COM / FTPIERCE