C I T Y O F F O R T P I E R C E

CITY COMMISSION AGENDA

Regular Meeting - Tuesday, February 19, 2019 - 6:30 p.m.
City Hall - City Commission Chambers, 100 North U.S. #1, Fort Pierce, Florida

1. **CALL TO ORDER**

2. **OPENING PRAYER**

3. **PLEDGE OF ALLEGIANCE**

4. **ROLL CALL**

5. **APPROVAL OF MINUTES**

   a. Approval of the minutes for the February 4, 2019 Regular Meeting.

6. **PROCLAMATIONS**

7. **LETTERS TO COMMISSION**

   a. Email from Joanne Albarelli commending Karen Murphy, Executive Assistant, Building Department, for outstanding professional customer service; she is a wonderful and positive representative for our City.

8. **COMMENTS FROM THE PUBLIC ON AGENDA ITEMS NOT REQUIRING PUBLIC HEARINGS**

   Any person who wishes to comment on an agenda item which is not under Public Hearings on the Agenda may be heard at this time and must sign up to speak in advance. Please limit your comments to three (3) minutes or less, as directed by the Mayor, as this section of the Agenda is limited to thirty minutes. The City Commission will not be able to take any official actions under Comments from the Public. Speakers will address the Mayor, Commissioners, and the Public with respect. Inappropriate language will not be tolerated.

9. **ADDITIONS OR DELETIONS TO AGENDA AND APPROVAL OF AGENDA**

10. **MISCELLANEOUS REPORTS**

a. Update on status of negotiations with the Humane Society of St. Lucie County

11. **CONSENT AGENDA**

a. Approval of the assignment of Lease Agreement for Little Jim's Bait and Tackle, Inc. from Richard and Rita King to Diego Larroude and Donna Qvarnstom-Burke under the same terms and conditions of the existing lease with an expiration date of April 30, 2025.

b. Approval of the installation of one (1) UL-2085 rated 20,000 gallon diesel fuel above-ground tank, to be located at 3711 Crossroads Parkway.

c. Approval and acceptance of FEMA Hazard Mitigation Grant agreement for the construction of the 17th Street (Orange Avenue to Avenue D) drainage improvement project in the amount of $856,198.

d. Approval of Change Order No. 6 to Lynch Paving and Construction Company in an amount not to exceed $1,017,583.85 for Surfside Drainage Improvements (pending approval by City Attorney of form and correctness).

e. Approval of a $421,910.00 construction contract issued to Johnson-Davis, Inc. as required for emergency construction restoration of a portion of Edwards Road Canal (Canal No. 9) situated between Oleander Avenue and Sunrise Boulevard.

f. Approval of Specific Authorization No. 6 in an amount not to exceed $11,120.00 (reimbursed by USDA NRCS) for professional engineering services relating to modifications to the original engineering design of Canal No. 9.

g. Approve waiver of fees in the amount of $564.64 associated with lot clearing lien against 1218 Avenue I, Fort Pierce, FL 34950, Parcel ID #2404-804-0013-000-8 previously owned by Evelia Rolle & Maurice Jelks, 1218 Avenue I, Fort Pierce, FL 34950 and currently owned by Lazatha Murphy, 3403 Avenue P, Fort Pierce, FL 34947 contingent upon payment of $540.00 payable in 30 days. Please note, applicant is requesting a waiver of all fees, including hard costs.

h. Approve waiver of fees in the amount of $283.60 associated with lot clearing lien against 1218 Avenue I, Fort Pierce, FL 34950, Parcel ID #2404-804-0013-000-8 previously owned by Evelia Rolle & Maurice Jelks, 1218 Avenue I, Fort Pierce, FL 34950 and currently owned by Lazatha Murphy, 3403 Avenue P, Fort Pierce, FL 34947 contingent upon payment of $800.00 payable in 30 days. Please note, applicant is requesting a waiver of all fees, including hard costs

12. **PUBLIC HEARINGS**

a. Quasi-Judicial Hearing - Review and approval of an applicaiton for a Conditional Use with New Construction submitted by property owner/applicant, Steve Tarr (TR), for construction seaward of the Coastal Construction Control Line (CCCL) for an exterior staircase to the prinicpal structure and a dune crossover with deck, located at 316 S. Ocean Drive. The property is zoned Hutchinson Island Medium Residential (R4A), Parcel ID 2401-501-0022-000-5.

b. Quasi-Judicial Hearing - Review and approval of an application for Conditional Use with no new construction submitted by property owner, Hoyt C Murphy Inc., Benson Family Partnership, and applicant Rodolfo Diaz, to establish Child Day Care Facility at 810 S 6th Street, Fort Pierce, FL. The property is zoned General Commercial (C-3), Parcel ID: 2415-601-0456-000-6.

c. Quasi-Judicial Hearing - Review and approval of an application for Conditional Use with No New Construction submitted by property owner Kimberly Jones, to operate a dwelling rental for more than 31 days, but less than 6 months at 355 S. Ocean Drive Apt. 601 in Fort Pierce, FL. The property is zoned Hutchinson Island Medium Density Residential (R4-A) Parcel ID: 2401-522-0023-000-7.

d. Quasi-Judicial Hearing - Review and approval of an application for Conditional Use with No Construction submitted by Property Owners, H. & S. Citrus Inc., Applicant, We Buy Scrap, & Representative, Jim Frogner of Frogner Consulting, LLC, to operate a metal recycling facility, located at 3340 Enterprise Road & 1237 Grose Road in Fort Pierce, FL. The property is zoned Light Industrial (I-1) Parcel ID: 2428-502-0035-000-5 & 2426-502-0033-000-1

13. **CITY COMMISSION**

a. Applications seeking appointment to the Communitywide Council

b. Resolution No. 19-R06 establishing an Infrastructure Surtax Citizen Oversight Committee as per the requirements specified in City of Fort Pierce Resolution No. 18-R15 and the half-cent sales surtax ballot language approved by the citizens of St. Lucie County.

14. **COMMENTS FROM THE PUBLIC**

Any person who wishes to comment on any subject may be heard at this time. Please limit your comments to three (3) minutes or less, as directed by the Mayor, as this section of the Agenda is limited to thirty minutes. The City Commission will not be able to take any official actions under Comments from the Public. Speakers will address the Mayor, Commissioners, and the Public with respect. Inappropriate language will not be tolerated.

15. **COMMENTS FROM THE CITY MANAGER**

16. **COMMENTS FROM THE COMMISSION**

17. **ADJOURNMENT**

Pursuant to Section 286.0105, Florida Statutes, the City hereby advises you that if you or another person decide to appeal any decision made by the City Commission with respect to any matter considered at its meeting or hearing, that you or said person will need a record of the proceedings, and that for such purpose, affected persons may need to insure that a verbatim record of the proceedings is made, which record includes the testimony and evidence upon which the appeal is to be based. This notice does not constitute consent by the City for the introduction or admission into evidence of otherwise inadmissible or irrelevant evidence, nor does it authorize challenges or appeals not otherwise allowed by law.

In accordance with the Americans with Disabilities Act and Section 286.26, Florida Statutes, persons with disabilities needing special accommodation to participate in this meeting should contact the City Clerk's Office at (772) 467-3065 at least 48 hours prior to the meeting.

City Commission Regular Meeting **5.a.**

Meeting Date: 02/19/2019

Re: Meeting Minutes of 2.04.2019

Submitted For: Linda Cox, City Clerk, City Clerk

SUBJECT:

Approval of the minutes for the February 4, 2019 Regular Meeting.

SUMMARY:

Approval of the minutes for the February 4, 2019 Regular Meeting.

RECOMMENDATION:

ALTERNATIVES:

RESPONSIBLE STAFF:

COORDINATED WITH:

Attachments

Mtg Mins_02.042019

Form Review

Form Started By: Noemi Rios Started On: 02/13/2019 01:25 PM

Final Approval Date: 02/13/2019

MINUTES OF A REGULAR MEETING OF THE CITY COMMISSION OF THE CITY OF FORT PIERCE, FLORIDA, HELD IN THE CITY HALL COMMISSION CHAMBERS, 100 NORTH U.S. #1, FORT PIERCE, FLORIDA, AT 6:30 P.M. ON MONDAY, **FEBRUARY 4, 2019.**

1. CALL TO ORDER

The meeting was called to order at 6:30 p.m.

2. OPENING PRAYER - Pastor Wayne Hewlitt, Macedonia Seventh Day Adventist Church Fort Pierce

3. PLEDGE OF ALLEGIANCE

4. ROLL CALL

Present: Mayor Linda Hudson; Commissioner Rufus Alexander; Commissioner Jeremiah Johnson; Commissioner Reginald Sessions

Absent: Commissioner Thomas Perona

Staff Present: City Clerk Linda Cox
City Manager Nicholas Mimms
City Attorney Peter Sweeney

Linda Cox, City Clerk, indicated Commissioner Perona had advised he would not be present for this meeting.

Motion was made by Commissioner Rufus Alexander, seconded by Commissioner Jeremiah Johnson to excuse Commissioner Perona from this meeting.

AYE: Mayor Linda Hudson, Commissioner Rufus Alexander, Commissioner Jeremiah Johnson, Commissioner Reginald Sessions

Passed

5. APPROVAL OF MINUTES

a. Approval of the minutes for the January 22, 2019 Regular Meeting.

Motion was made by Commissioner Jeremiah Johnson, seconded by Commissioner Rufus Alexander to approve item 5 a.

AYE: Mayor Linda Hudson, Commissioner Rufus Alexander, Commissioner Jeremiah Johnson, Commissioner Reginald Sessions

Passed

6. **PROCLAMATIONS**

Mayor Hudson issued the Proclamations.

a. Proclamation recognizing Arbor Day

b. 2-1-1 Awareness Week

c. Billion Steps Challenge

7. **LETTERS TO COMMISSION**

The following letters will be kept on file in the City Clerk's Office.

a. Letter from Lee Spector, Criminal Justice Institute Director, Indian River State College, expressing their sincere appreciation for the participation of the following officers in their celebration of fifty years of service as a law enforcement training center: Officer Jose Maldonado, Officer Charles Montano, Officer Alexander Quiles, Detective Al Garcia, Sergeant Tyrone Campbell, Sergeant Graham Kelley and Sergeant Diego Palacio.

8. **COMMENTS FROM THE PUBLIC ON AGENDA ITEMS NOT REQUIRING PUBLIC HEARINGS**

There were no public comments.

9. **ADDITIONS OR DELETIONS TO AGENDA AND APPROVAL OF AGENDA**

Nicholas Mimms, City Manager, indicated that late last week Commissioner Perona requested he draft a letter to St. Lucie County Board of County Commissioners in support of an enchanced County-wide Anti-Tethering movement to erradicate the cruelty to animals that are tethered. Mr. Mimms asked for this letter to be added to the City Commission section of the agenda.

Motion was made by Commissioner Jeremiah Johnson, seconded by Commissioner Rufus Alexander to approve the agenda as presented with the addition of the letter of support regarding anti-tethering to St. Lucie County Board of County Commissioners as item 13 c.

AYE: Mayor Linda Hudson, Commissioner Rufus Alexander, Commissioner Jeremiah Johnson, Commissioner Reginald Sessions

Passed

10. MISCELLANEOUS REPORTS

a. Update on the Energy Performance Savings Contract with ConEdison.

Michael Reals, Public Works Director, and Steven Schwerman with Con Edision Solutions presented to the City Commission. Mr. Schwerman indicated when they began looking at saving the city money, they were to find a positive return on investment for energy conservation and to do this they looked at lighting and controls, street lighting, water conservation, HVAC controls and demand, and the controlled ventilation for heating and cooling system the city has. The verified annual savings exceeded Con Edison's guarantees by $37,327. There were significant capital renewal projects completed as well.

b. First Quarter Financial Report

Johnna Morris, Finance Director, indicated all funds with the exception of the Golf Course and the Sunrise Theatre are on target as projected. Improvements were done at the Indian River Hills Golf Course that were not budgeted for but needed to be done. Ms. Morris explained Danny Visconti, Golf Course Director, has been doing most of the work himself so as to not incur additional costs to the city. The Sunrise Theatre has increased their fiscal net resources this year by $583,235, however, they still need to address the 2017 fiscal year shortage that is in this fund. The City Commission inquired and discussed funds for street repairs and repaving. Mr. Mimms indicated he'd have staff report on capital funds to the City Commission so they are aware what was being done and repaired.

11. CONSENT AGENDA

There was no Consent Agenda.

12. PUBLIC HEARINGS

a. Legislataive Hearing - Ordinance 19-001 seeking a major amendment to Oak Alley Planned Development to revise the previously-approved site plan for a new building layout and add religious institution as an approved use for Discovery Church at 4403 South 25th Street. SECOND READING

City Clerk Linda Cox introduced the ordinance, read by title only, into the record.

AN ORDINANCE BY THE CITY COMMISSION OF THE CITY OF FORT PIERCE, FLORIDA; MODIFYING THE OAK ALLEY PLANNED DEVELOPMENT TO REVISE THE PREVIOUSLY-APPROVED SITE PLAN FOR A NEW BUILDING LAYOUT AND ADD RELIGIOUS INSTITUTION AS AN APPROVED USE ON PROPERTY GENERALLY LOCATED AT 4403 SOUTH 25TH STREET; PROVIDING FOR A SEVERABILITY CLAUSE; REPEALING ALL ORDINANCES OR PARTS THEREOF IN CONFLICT HEREWITH; AND PROVIDING FOR AN EFFECTIVE DATE.

Mayor Hudson opened the Public Hearing.
Seeing no one, the Mayor closed the Public Hearing.

Motion was made by Commissioner Rufus Alexander, seconded by Commissioner Jeremiah Johnson to approve item 12 a.

AYE: Mayor Linda Hudson, Commissioner Rufus Alexander, Commissioner Jeremiah Johnson, Commissioner Reginald Sessions

Passed

b. Legislative Hearing - Ordinance 19-002 Amending the Future Land Use Map of the Comprehensive Plan to change the designation of property generally located at 1237 Grose Road from St. Lucie County IND, Industrial to City of Fort Pierce I, Industrial and to change the designation of property generally located at 3340 Enterprise Road from INST, Institutional to I, Industrial. SECOND READING

City Clerk Linda Cox introduced the ordinance, read by title only, into the record.

AN ORDINANCE BY THE CITY COMMISSION OF THE CITY OF FORT PIERCE, FLORIDA; AMENDING THE FUTURE LAND USE MAP OF THE COMPREHENSIVE PLAN TO CHANGE THE DESIGNATION OF TWO (2) PARCELS GENERALLY LOCATED AT OR NEAR 1237 GROSE ROAD & 3340 ENTERPRISE ROAD FROM ST. LUCIE COUNTY IND, INDUSTRIAL TO CITY OF FORT PIERCE I, INDUSTRIAL AND FROM FORT PIERCE INST, INSTITUTIONAL TO FORT PIERCE I, INDUSTRIAL; PROVIDING FOR A SEVERABILITY CLAUSE; PROVIDING FOR REPEAL OF ORDINANCES OR PARTS THEREOF IN CONFLICT; PROVIDING FOR AN EFFECTIVE DATE.

Mayor Hudson opened the Public Hearing.
Seeing no one, the Mayor closed the Public Hearing.

Motion was made by Commissioner Jeremiah Johnson, seconded by Commissioner Reginald Sessions to approve item 12 b.

AYE: Mayor Linda Hudson, Commissioner Rufus Alexander, Commissioner Jeremiah Johnson, Commissioner Reginald Sessions

Passed

c. Legislative Hearing - Ordinance 19-003 - Review and approval of an application for Major Amendment to the Harbour Isle Planned Development to allow for the construction of an 11,050 sqft retail building with associated improvements for a parcel in Harbour Isle located at 825 Seaway Drive, Fort Pierce, FL. The property is currently zoned PD, Planned Development. SECOND READING

City Clerk Linda Cox introduced the ordinance, read by title only, into the record.

AN ORDINANCE BY THE CITY COMMISSION OF THE CITY OF FORT PIERCE, FLORIDA; MODIFYING THE HARBOUR ISLE PLANNED DEVELOPMENT TO REVISE THE PREVIOUSLY-APPROVED SITE PLAN FOR A RETAIL BUILDING ON PROPERTY GENERALLY LOCATED AT 825 SEAWAY DRIVE; PROVIDING FOR A SEVERABILITY CLAUSE; REPEALING ALL ORDINANCES OR PARTS THEREOF IN CONFLICT HEREWITH; AND PROVIDING FOR AN EFFECTIVE DATE.

Mayor Hudson opened the Public Hearing.
Annette Rudd, resident of Harbour Isle, indicated she was in opposition.
Seeing no one else, the Mayor closed the Public Hearing.

Motion was made by Commissioner Reginald Sessions, seconded by Commissioner Rufus Alexander to approve item 12 c.

AYE: Mayor Linda Hudson, Commissioner Rufus Alexander, Commissioner Jeremiah Johnson, Commissioner Reginald Sessions

Passed

13. CITY COMMISSION

a. Resolution 19-R04 appointing members to the Keep Fort Pierce Beautiful Advisory Board following a vote by the Commission

Ms. Cox indicated there was one open position on the Keep Fort Pierce Beautiful board and four candidates had submitted applications to be considered. Ms. Cox passed the ballots for the City Commission members to vote on.

Commissioner Alexander voted for Jane Zezeck.
Commissioner Johnson voted for Jane Zezeck.
Commissioner Sessions voted for Jane Zezeck.
Mayor Hudson voted for Jane Zezeck.

City Clerk Linda Cox introduced the resolution, read by title only, into the record.

A RESOLUTION OF THE CITY COMMISSION OF THE CITY OF FORT PIERCE, FLORIDA, CERTIFYING THE APPOINTMENT OR REAPPOINTMENT OF MEMBERS TO THE KEEP FORT PIERCE BEAUTIFUL ADVISORY BOARD; PROVIDING FOR AN EFFECTIVE DATE.

Ms. Cox indicated along with Ms. Zezeck's appointment, Shyanne Helms, Communications Manager, is being reappointed as the city's representative by this resolution.

Motion was made by Commissioner Jeremiah Johnson, seconded by Commissioner Rufus Alexander to approve item 13 a appointing Jane Zezeck to the Keep Fort Pierce Beautiful Board and reappointing Shyanne Helms as the city's representative.

AYE: Mayor Linda Hudson, Commissioner Rufus Alexander, Commissioner Jeremiah Johnson, Commissioner Reginald Sessions

Passed

b. Resolution 19-R05 authorizing the creation and recordation of a 50' wide Avenue B Right-of-Way located between North 2nd Street and Indian River Drive.

City Clerk Linda Cox introduced the resolution, read by title only, into the record.

A RESOLUTION OF THE CITY COMMISSION OF THE CITY OF FORT PIERCE, FLORIDA, AUTHORIZING AND DIRECTING THE MAYOR-COMMISSIONER AND CITY CLERK OF THE CITY OF FORT PIERCE TO APPROVE THE CREATION AND RECORDATION OF A 50' PUBLIC ROAD RIGHT-OF-WAY EXTENDING FROM NORTH 2ND STREET TO INDIAN RIVER DRIVE, COMMONLY KNOWN AS AVENUE B, AND DIRECTING THE CLERK TO FILE A RIGHT-OF-WAY MAP IN THE OFFICE OF THE CLERK OF THE CIRCUIT COURT OF ST. LUCIE COUNTY, FLORIDA.

Jack Andrews, City Engineer, reminded the City Commission a while ago a citizen came and asked about private access from Avenue B to the lots that face Marina Way. Avenue B was never officially a public right-of-way since it was constructed on property that FPUA owned at one time and then reverted back to the city. This resolution establishes that road is now a public right-of-way that gives access to the north and south of that road. The City Commission deliberated on whether they should keep or change the street name in the future.

Motion was made by Commissioner Jeremiah Johnson, seconded by Commissioner Reginald Sessions to approve item 13 b.

AYE: Mayor Linda Hudson, Commissioner Rufus Alexander, Commissioner Jeremiah Johnson, Commissioner Reginald Sessions

Passed

c. ADD ON ITEM: Approval of Letter of Support to St. Lucie County encouraging them to adopt a tethering ordinance.

Nicholas Mimms, City Manager, indicated since many residents do not know if their home falls within the county or city's jurisdiction, it was a good idea to collaborate in this effort so there is no questioning the boundaries and we can mutually help each other with this anti-tethering movement.

Motion was made by Commissioner Jeremiah Johnson, seconded by Commissioner Rufus Alexander to approve item 13 c.

AYE: Mayor Linda Hudson, Commissioner Rufus Alexander, Commissioner Jeremiah Johnson, Commissioner Reginald Sessions

Passed

14. COMMENTS FROM THE PUBLIC

Susan Parry
Klip Kluppelberg
Ron Hobbard
Lisa Potter
Don Perry
Kathy Norton
Lesafa Murphy

15. COMMENTS FROM THE CITY MANAGER

a. City Manager's Report and Purchase Order Report

Nicholas Mimms, City Manager, was enthusiastic as he spoke about how Downtown Fort Pierce was vibrant and full of people last Friday with Sinbad performing at the Sunrise Theatre. Saturday there was also a group called iLuminate that brought so many people to our city that there were lines to get into various restaurants in town. We are definitely seeing our downtown thrive and it has become an attraction for many. On Monday, February 11 during the Conference Agenda, the City Commission will have an opportunity to discuss the utilization of Old City Hall since its last tenant moved out. There will be a review of Code Enforcement practices. Additionally, the Historic Preservation Board, Board of Adjustments and the Construction Board of Adjustments and Appeals will be reviewed. The decisions of these boards are final and can be appealed at the local appellate court. Thus, the City Commission will have the opportunity to discuss if they'd prefer to reconstitute these as advisory boards instead allowing the City Commission to have the final say. The Parks Advisory Committee completed their research and our Public Works Department are ready to discuss Special Use Permits. St. Lucie County notified us that they have been contacted by Florida Wildlife Committee (FWC) about the utilization of the manatee boat ramp that leads into Moore's Creek. Due to reduced presence of manatees in Moore's Creek there has been a request by FWC to reopen the boat ramp throughout the year. On that same date and time, Congressman Mast will be holding a discussion on the Lake Okeechobee Regulation Schedule (LORS) taking place in Stuart. Nicole Fogarty, our Legislative Affairs Director, will be attending on our behalf due to our schedule conflicting and she will make us privy to what was discussed. There will also be an FPRA meeting immediately after the Conference Agenda and the King Plant development will be discussed.

Peter Sweeney, City Attorney, reminded the City Commission that the Shade Meeting relating to the Hollander v. City of Fort Pierce case would also be held on the same date at 1:30 p.m.

16. COMMENTS FROM THE COMMISSION

Commission Alexander expressed his concerns regarding the jet skis and the safety of the community. The Commission discussed the jurisdiction, signage, and possibly banning these. They concluded the Parks Committee should review this and the uses of Jaycee Park.

Commissioner Sessions had no comments tonight.

Commissioner Johnson felt the Manatee Observation and Education Center should get involved with the FWC's request to open the boat ramp year round. He wasn't sure if the Manatee Observation and Education Center would agree with there being fewer manatees now than before meriting the opening of the boat ramp year round. He preferred they be involved before a decision was made. If they do decide to open the boat ramp year round, they would need to look at different uses for that area. Regarding Old City Hall use, Commissioner Johnson would like the square footage of the area. He understands there were no bids submitted with the first RFP advertised. As for the Humane Society, he felt it was time to get on board with the County or at least have a plan in place since it was easy to see this is a recurring problem. Commissioner Alexander agreed. He would like the administration to speak to each City Commission member individually to let them know what is happening and get an update. Mr. Mimms indicated he has a meeting scheduled at the end of February to get an update already.

Mayor Hudson indicated the Lord Mayor of Cork City in Ireland will be visiting the City of Fort Pierce March 10-12, 2019 and will be accompanied by his CEO. They will be in the United States for St. Patrick's Day. As a result, the Irish-American Organization called Fort to Fort are putting together this trip. They believe this area is very much like Cork, Ireland. She requested the City Commission's participation in coming to any events they can attend while the Lord Mayor is here. There will be an Irish sporting event called Hurling on Sunday afternoon. They will be meeting with the Economic Development Council of St. Lucie County (EDC) and Tourist Development Council (TDC) as well. She indicated she'd keep the

Commission privy to the events scheduled so that they may attend.

17. ADJOURNMENT

The meeting adjourned at 8:37 p.m.

ATTEST:

_____	_____
CITY CLERK	MAYOR COMMISSIONER

City Commission Regular Meeting **7.a.**

Meeting Date: 02/19/2019

Re: Email from Joanne Albarelli

Submitted For: Nick Mimms, City Manager, City Manager

SUBJECT:

Email from Joanne Albarelli commending Karen Murphy, Executive Assistant, Building Department, for outstanding professional customer service; she is a wonderful and positive representative for our City.

Attachments

Email from Joanne Albarelli

Form Review

Inbox	Reviewed By	Date
City Manager	Nick Mimms	02/12/2019 11:18 AM
City Manager	Nick Mimms	02/12/2019 11:18 AM

Form Started By: Jennifer Robinson Started On: 01/31/2019 11:09 AM

Final Approval Date: 02/12/2019

To: LHudson@City-FtPierce.Com
From: "Joanne Albarelli" <throcker1896@aol.com>
Date: 01/30/2019 10:55AM
Cc: kmurphy@city-ftpierce.com, PThomas@City-FtPierce.Com, NMimms@City-FtPierce.Com, LCox@City-FtPierce.Com
Subject: Re: Comments

It truly was a pleasure. As I left the building I realized I had such a good feeling of having accomplished my task, so easily.

Thank you.

Joanne

From: Linda Hudson <LHudson@City-FtPierce.Com>
To: Joanne Albarelli <throcker1896@aol.com>
Cc: Karen Murphy <kmurphy@city-ftpierce.com>; Paul Thomas <PThomas@City-FtPierce.Com>; Nicholas Mimms <NMimms@City-FtPierce.Com>; Linda Cox <LCox@City-FtPierce.Com>
Sent: Wed, Jan 30, 2019 8:20 am
Subject: Re: Comments

Our City is striving to make sure each and every employee provides the best service possible. You email made my day and maybe even my week or month. Not everyone takes the time to let us know when things go well. I appreciate you very much. I am sharing with management.

Linda Hudson
Mayor
City of Fort Pierce
772-467-3065

From: throcker1896@aol.com
To: pthomas@city-ftpierce.com
Cc: lhudson@city-ftpierce.com, kmurphy@city-ftpierce.com
Date: Jan 29, 2019, 3:22:08 PM
Subject: Comments

Good Afternoon Paul,

When residents have complaints regarding their dealings with government personnel we always make the time to register those complaints to the proper authority. Well, I just had business with the FP Bldg Department and I am delighted to say that I cannot be more pleased with the professional service I received from Karen Murphy.

Karen is intelligent, knowledgeable, helpful and, most pleasant. She was very patient; she walked me through the entire procedure; explained the process and when I could expect the documents would be ready. Karen also recommended other helpful material.

I stopped in today without an appointment and sure enough Karen had all the documents ready for me. She was so friendly...she put me at ease at the very outset of my initial visit. I was so happy today when I left the building, I knew I would have to make you aware of my experience. Clearly, Karen is a wonderful and positive representative of our City.

I might add, the security officer and the Receptionist in the lobby also were very pleasant for all three of my visits.

Just thought you might appreciate some good comments.

Be Well,

Joanne Albarelli

City Commission Regular Meeting **10.a.**

Meeting Date: 02/19/2019

Re: Humane Society Update

Submitted For: Peggy Arraiz, Code Compliance Manager, Code Enforcement

---

SUBJECT:

Update on status of negotiations with the Humane Society of St. Lucie County

SUMMARY:

When the Commission approved the FY 2019 contract, staff was directed to work with St. Lucie County and Port St. Lucie and the Humane Society to resolve multiple issues and concerns regarding the operation of the Humane Society and to develop a single, unified contract to include all three (3) jurisdictions.

RECOMMENDATION:

Update only - negotiations continue.

ALTERNATIVES:

Update only - negotiations continue.

RESPONSIBLE STAFF:

Margaret M. Arraiz, Code Compliance Manager

COORDINATED WITH:

Nicholas Mimms, City Manager
Janey Vanderhorst, Code Compliance Supervisor

Fiscal Impact

OTHER INFORMATION:

FY 2019 contract and funding already approved. Update on negotiations for FY 2020 only.

Attachments

FY 2019 Contract
Financial Report - Oct 18
Financial Report - Nov 18
Financial Report - Dec 18
Financial Report - Jan 19
11-2-18 Update to Nick Mimms
1-22-19 Update to Nick Mimms

Form Review

Inbox	Reviewed By	Date
City Manager	Peggy Arraiz	02/06/2019 01:28 PM
City Manager	Nick Mimms	02/14/2019 08:44 AM

Form Started By: Peggy Arraiz Started On: 02/06/2019 01:21 PM

Final Approval Date: 02/14/2019

AGREEMENT

THIS AGREEMENT made this day of November 5, 2018 , and effective as of October 1, 2018 between the City of Fort Pierce, a municipal corporation, hereinafter referred to as "City", and the Humane Society of St. Lucie County, Inc., hereinafter referred to as "The Humane Society", is entered into between the parties for the purpose of the City providing reimbursement to The Humane Society for animals from within City's municipal boundaries, brought to The Humane Society as lost, abandoned, or neglected animals.

WHEREAS the City, through operation of its Animal Control Division and the enforcement of state and local laws regulating animal control and in protection of the health, safety, and welfare of the citizens of the City, takes into custody and impounds animals; and

WHEREAS The Humane Society has the ability to provide facilities for the impoundment and the provision of other services to the City's Animal Control Division, as well as to the citizens of the City; and

WHEREAS the parties agree to mutually cooperate for the purpose of controlling animals within the corporate limits of the City,

NOW THEREFORE, in consideration of the mutual benefits received by each party, the City and The Humane Society agree as follows:

1. The Humane Society shall be a provider of shelter, board, and care for domestic animals picked up within the City's corporate limits or received from the citizens of the incorporated areas of the City and delivered to The Humane Society by either the City's Animal Control Division or any citizen of the incorporated area of the City, until the animal is either returned to its owner, adopted, or otherwise disposed of at the discretion of The Humane Society and in accordance with state and local law. Delivery of any animal pursuant to this Agreement shall be made to The Humane Society's shelters at 100 Savannah Road, Fort Pierce, Florida or 8890 NW Glades Cut Off Road, Port St. Lucie, FL 34986. The Humane Society shall further provide quarantine for all animals which have been involved in a biting incident.

2. The Humane Society shall, at its discretion, provide appropriate medical care and preventative vaccinations whenever possible, to animals delivered to its shelter by the City's Animal Control Division or by any citizen of the incorporated areas of the City.

3. The Humane Society shall treat, whenever possible, flea and tick infestation of outer extremities of animals delivered to its shelter by City's Animal Control Division or by any citizen of the incorporated areas of the City.

4. The Humane Society agrees to comply with all local, state and federal laws, rules and regulations.

5. The Humane Society shall allow unannounced inspections of the facility by the City Manager, Animal Control Manager and Animal Control Officers to ensure that all animals under its care are being treated humanely and receiving the appropriate medical care as outlined in paragraphs 2 and 3 of this section as well as in accordance with state statutes regarding animal care and control.

6. The Humane Society shall provide the City with a monthly record of all animals delivered to the its shelter by City's Animal Control Division or any citizen of the incorporated area of the City, including the names and addresses of citizens who drop off animals and the owners to whom animals are returned. The City will not be responsible for any animal that is dropped off in the overnight/weekend drop-off box anonymously at the shelter. However if an animal is turned in to staff and the person dropping off the animal identifies as a resident of the incorporated limits of Ft. Pierce but refuses to further identify, shelter staff shall make a record of the drop off and that animal shall be the responsibility of the City. The monthly reports shall be produced by The Humane Society and delivered to the City on or before the fifth day of the month following the month for which the report is prepared. Failure of the City to object to the report described above within 5 days of receipt shall waive any objection. If the City timely objects the objection shall be resolved within 5 days.

7. The term of this Agreement shall take effect retroactively to October 1, 2018, and shall continue through and including September 30, 2019.

8. For and in consideration for the shelter services performed by The Humane Society in accordance with this Agreement, the City shall compensate The Humane Society in the total amount of $133,000.00, payable in monthly payments in the amount of $11,083.34. Payment shall be due within 15 days of receipt of an invoice and written financial report from the Humane Society accompanied by the record of impoundment activities as described in Section 6 of this agreement. In the event of early termination according to the provisions of the Agreement, the Humane Society shall refund the pro rata amount of the monthly sum payment to the City of Fort Pierce based upon a thirty (30) day term. Such refund shall be due within thirty (30) days of the effective date of the termination.

    a. The agreed upon annual fee shall cover the impoundment of up to one thousand (1,000) animals as shown by the monthly records required in paragraph 6 herein.

    b. Kitten or puppy litters with or without their dam shall be counted as two (2) animals. For purposes of this section, a kitten or puppy shall be any young animal approximately eight (8) weeks old or younger.

    c. If the number of impounds exceeds one thousand (1,000) animals verified by the reports required in paragraph 6 as being a City animal, the City will be billed at a rate of $133.00 per animal.

    d. The Humane Society has in good faith continued to accept animals from the City from October 1, 2018 in the absence of a contract. The Humane Society shall deliver the requisite monthly report no later than November 5, 2018. The City shall compensate the Humane Society within 5 days of the adoption of this contract the monthly fee of $11,803.34, in payment of the monthly amount due for October 2018.

9. In the event an animal is impounded by City Animal Control Officers due to animal abuse and the City exercises its discretion to pursue charges relating to such abuse, the City agrees to file the necessary paperwork with the Clerk of Court to obtain custody of such animals. The City will pay the following:

a. $10.00 per day per animal until a final determination is made by the court.

b. If needed to ensure the safety of both the staff and other animals impounded at The Humane Society, within thirty (30) days of impound, the City will pay $10.00 per animal for the necessary vaccinations, including rabies and bordetella.

c. If the City is granted custody of the animal(s) by the court and The Humane Society deems the animals to be adoptable, the City will provide a free voucher to cover the costs of the animal to be spayed or neutered.

10. The Humane Society shall not release an animal impounded under this Agreement unless the conditions specified in Sec. 4-76 of the City Code of Ordinances have been met.

11. If during the term of this Agreement, there is an unexpected increase in The Humane Society's operating expense of such magnitude to cause a material and adverse financial burden upon it, The Humane Society shall provide proof of such increase to the City Commission, and upon mutual written agreement by both parties, the annual fee may be adjusted accordingly, and if a mutual written agreement cannot be reached within sixty (60) days from the date first proposed to the City Commission, The Humane Society shall have the right to exercise its option to terminate this Agreement as provided herein, without penalty.

12. The Humane Society shall maintain all relevant books, documents, papers, and records involving transactions related to the monies paid hereunder as well as the records of all animals delivered to the shelter by City's Animal Control Division or any citizen of the incorporated area of the City, including the names and addresses of citizens who drop off animals and the owners to whom animals are returned, for a period of no less than three (3) years from the expenditure of the funds paid under this Agreement, or until any requested inspection or audit by the City is completed. The City shall have the right of inspection and access to all such records upon written notice to The Humane Society. The City shall have the right to audit the use of the monies paid hereunder. Should City wish to inspect such records or conduct an audit of monies expended under this Agreement, the City shall give The Humane Society ten (10) days written notice.

13. The Humane Society hereby agrees to indemnify and hold harmless the City, its representatives, employees, elected, and appointed officials from and against claims, demands, legal fees, costs of action, losses, damages, or other expenses occasioned by any negligent act, conduct, error, or omission by The Humane Society, its agents and employees in the performance of this Agreement.

14. The Humane Society is required to provide the City proof of certain insurance under its 1987 lease of the City's property; however, where such lease provisions conflict with the provisions required herein, the requirements of this Section shall control. The Humane Society shall maintain the following insurance coverage during the term of this Agreement:

A.) Commercial General Liability

The Humane Society shall maintain and, prior to commencement of this contract, provide the City with satisfactory evidence of commercial general liability insurance to

include: 1) bodily injury and property damage and personal and advertising injury for limits of not less than $1,000,000 per occurrence; 2) products completed operations aggregate limit of $1,000,000; 3) Damage to Premises Rented to You for limits of not less than $100,000 per occurrence; 4) medical payments for limits not less than $5,000 per person and 5) a general, per contract/project, aggregate limit of not less and $2,000,000. Such insurance shall be no more restrictive than that provided by the most recent version of standard Commercial General Liability Form (ISO Form CG 00 01) without any restrictive endorsements. The policy shall also provide the City will be given a thirty (30) day written notice of cancellation or non-renewal and include City and its members, officials, officers and employees as additional insureds on a form no more restrictive than ISO Form CG 20 10 (Additional Insured-Owner, Lessees, or Contractors).

B.) Workers' Compensation and Employers Liability:

The Humane Society shall maintain and, prior to commence of this contract, provide the City with satisfactory evidence of workers' compensation insurance providing Florida statutory (F.S. 440) limits to cover all employees and include Employers Liability coverage with limits of not less than $500,000 for accidents and disease. The policy shall also provide the City will be given a thirty (30) day written notice of cancellation or non-renewal.

C.) Satisfactory evidence of compliance with the insurance required shall include one of the following forms of acceptable evidence of insurance:

1)

a. Fully completed satisfactory Certificate of Insurance evidencing all coverage required; and
b. A copy of the actual additional insured endorsement as issued on the Commercial General Liability policy, signed by an authorized representative of the insurer(s) verifying the inclusion of the City and the City's members, officials, officers, and employees as additional insureds in the Commercial General Liability; and
c. A copy of the actual endorsement for each required policy which provides that the City will be given no less than thirty (30) days advance written notice of any cancellation of the policy(ies), signed by an authorized representative of the insured(s).

2) The original of the policy(ies); or

3) Other evidence satisfactory to the City.

15. Either party may terminate this Agreement with or without cause upon sixty (60) day written notice to the other. In the event of early termination, The Humane Society shall refund the pro rata amount of the monthly payment provided in Paragraph 8 of this Agreement to the City of Fort Pierce based upon a 30 day term. Such refund shall be due within thirty (30) days of the effective date of the termination.

16. Any notice shall be in writing and sent registered or certified mail, postage and charges, prepaid, and addressed to the parties as follows:

CITY: Fort Pierce City Manager
P.O. Box 1480
Fort Pierce, Florida 34954

COPY TO: Fort Pierce City Attorney

THE HUMANE SOCIETY: Humane Society of St. Lucie County, Inc.
P.O. Box 3661
Fort Pierce, Florida 34948

17. No amendment, modification or waiver of this Agreement shall be valid or effective unless in writing and signed by both parties and no waiver of any breach or condition of this Agreement shall be deemed a waiver of any other conditions or subsequent breach whether of like or different nature. If the City, currently or subsequently, provides any forms for contract modifications, The Humane Society agrees to use said forms. The Humane Society shall not delegate, sublet, or subcontract any part of the work under this contract without the prior written consent of the City.

18. This Agreement embodies the whole understanding of the parties. There are no promises, terms, conditions, or obligations other than those contained herein, and this Agreement shall supersede all previous communications, representations, or agreements, whether verbal or written between the parties hereto.

IN WITNESS WHEREOF, the parties have caused the execution by their duly authorized officers effective as of the date set forth above.

CITY OF FORT PIERCE, FLORIDA

Linda Hudson, Mayor

ATTEST:

Linda W. Cox, City Clerk

Approved as to form and correctness

Ben Bryan, Jr. Interim
City Attorney

HUMANE SOCIETY OF ST. LUCIE COUNTY, INC.

BY: _____
Mary Jean Navaretta,Chairman

STATE OF FLORIDA
COUNTY OF ST. LUCIE

I hereby certify that on this day, before me, an officer duly authorized by the State and County aforesaid, to take acknowledgements, personally appeared **Mary Jean NAVARETTA, Chairman OF THE HUMANE SOCIETY OF ST. LUCIE COUNTY, INC.** who executed the foregoing instrument and produced _____ as identification and who did take an oath.

WITNESS MY HAND AND SEAL in the County and State aforesaid this 6 day of 2018, 2018.



_____
Notary Public signature

Kristina A. Becker.
Print name

My commission expires: 11/2020

HUMANE SOCIETY OF ST LUCIE CO
Profit & Loss Budget vs. Actual - PSL Campus
October 2018

	Oct 18	Budget	% of Budget	
Ordinary Income/Expense				
Income				
4000 · INCOME - GOVT				
4002 · GOVERNMENT SERVICES - PSL	12,708.33	152,500.00	8.3%	
Total 4000 · INCOME - GOVT	12,708.33	152,500.00		8.3%
4300 · INCOME - SERVICES				
4303 · PRIVATE CREMATIONS	0.00	200.00	0.0%	
4304 · PRIVATE EUTHANISA	125.00	3,000.00	4.2%	
4306 · ADOPTION SPAY/NEUTER FEE	1,690.00	24,000.00	7.0%	
4308 · MICRO CHIPS	60.00			
4309 · RABIES SHOTS	210.00			
4310 · HEARTWORM / FLEA CONTROL	307.82			
4317 · OUTSIDE ADOPTIONS	0.00	600.00	0.0%	
4506 · PSL A C EMERGENCY VET SERVICES	927.95	10,000.00	9.3%	
4804 · BOARDING/OVERNITE	0.00	4,500.00	0.0%	
Total 4300 · INCOME - SERVICES	3,320.77	42,300.00		7.9%
4800 · INCOME - MISCELLANEOUS				
4806 · OVERAGE (DAILY WORK MONEY OVER	133.78			
4807 · OTHER / T SHIRTS / E COLLARS	1,783.87	3,500.00	51.0%	
Total 4800 · INCOME - MISCELLANEOUS	1,917.65	3,500.00		54.8%
Total Income	17,946.75	198,300.00		9.1%
Gross Profit	17,946.75	198,300.00		9.1%
Expense				
5000 · SALARY/WAGES AND RELATED COSTS				
5010 · SALARY AND WAGES				
5011 · ADMINISTRATIVE	2,863.73	24,530.00	11.7%	
5012 · SHELTER OPERATIONS	5,811.92	126,170.00	4.6%	
5014 · MAINTENANCE	855.62			
5016 · SURGERY CENTER	3,666.60	46,000.00	8.0%	
5017 · CLERICAL	1,306.10	14,300.00	9.1%	
Total 5010 · SALARY AND WAGES	14,503.97	211,000.00		6.9%
5020 · PAYROLL TAXES				
5021 · ADMINISTRATION	283.98	1,877.00	15.1%	
5022 · SHELTER	295.81	9,652.00	3.1%	
5024 · MAINTENANCE	69.43			
5026 · CLINIC CENTER	417.01	3,519.00	11.9%	
5027 · CLERICAL	87.95	1,094.00	8.0%	
Total 5020 · PAYROLL TAXES	1,154.18	16,142.00		7.2%
5040 · WORKMANS COMPENSATION				
5041 · ADMINISTRATION	16.31	1,055.00	1.5%	
5042 · SHELTER	313.96	5,425.00	5.8%	
5044 · MAINTENANCE	28.54	615.00	4.6%	
5046 · CLINIC	48.93	1,978.00	2.5%	
Total 5040 · WORKMANS COMPENSATION	407.74	9,073.00		4.5%
Total 5000 · SALARY/WAGES AND RELATED COSTS	16,065.89	236,215.00		6.8%
5100 · ADMINISTRATIVE				
5110 · Tax Preparation	0.00	625.00	0.0%	
5112 · BANK & CREDIT CARD FEES	-1.00	3,700.00	-0.0%	
5114 · BOARD EXPENSES	0.00	300.00	0.0%	
5120 · DUES & SUBSCRIPTIONS	207.42	165.00	125.7%	
5124 · EMPLOYEE EXPENSE	263.76	1,100.00	24.0%	
5126 · EQUIPMENT RENT/LEASE	607.65	7,164.00	8.5%	
5132 · INSURANCE- DIRECTORS & OFFICERS	174.04	2,100.00	8.3%	
5134 · INSURANCE- GENERAL & LIABILITY	572.08	7,000.00	8.2%	
5135 · VOLUNTEER INSURANCE	12.50	150.00	8.3%	
5139 · INTEREST EXPENSE	2,936.27	43,200.00	6.8%	
5140 · LICENSES & FEES	0.00	1,060.00	0.0%	
5142 · POSTAGE GENERAL	0.00	50.00	0.0%	
5144 · P.O. BOX RENT	0.00	105.00	0.0%	
5146 · PRINTING	0.00	1,100.00	0.0%	
5148 · PROGRAMING- WEB SITE	0.00	725.00	0.0%	
5150 · PROGRAMMING - COMPUTERS	80.00	1,100.00	7.3%	
5152 · SECURITY	264.00	3,500.00	7.5%	
5154 · SUPPLIES - OPERATING	311.10	1,400.00	22.2%	
5156 · SUPPLIES - COMPUTER	100.99	1,000.00	10.1%	
5158 · STAFF MILEAGE	148.14	1,800.00	8.2%	
5160 · TELEPHONE-MOBILE	105.54	1,300.00	8.1%	
5162 · TELEPHONE & FAX	1,257.01	15,000.00	8.4%	
Total 5100 · ADMINISTRATIVE	7,039.50	93,644.00		7.5%

HUMANE SOCIETY OF ST LUCIE CO
Profit & Loss Budget vs. Actual - PSL Campus
October 2018

	Oct 18	Budget	% of Budget
5200 · SHELTER OPERATIONS			
5220 · CREMATORY SERVICES	405.10	5,000.00	8.1%
5226 · EMERGENCY SPECIAL TREATMENT	1,333.95	17,000.00	7.8%
5242 · SUPPLIES - CLEANING	3,122.22	9,600.00	32.5%
5246 · SUPPLIES - MEDICAL	2,380.78	35,000.00	6.8%
5250 · SUPPLIES - PET FOOD	983.90	20,000.00	4.9%
5252 · SUPPLIES - SAFETY	187.49	2,800.00	6.0%
5254 · UNIFORMS	0.00	500.00	0.0%
5256 · UTILITIES - ELECTRIC	2,014.34	25,000.00	8.1%
5260 · UTILITIES - GAS HEAT	0.00	1,000.00	0.0%
5262 · UTILITIES - SEWER & WATER	1,511.24	21,000.00	7.2%
Total 5200 · SHELTER OPERATIONS	11,919.02	136,900.00	8.7%
5300 · BUILDING & MAINTENANCE			
5314 · MAINTENANCE - BUILDING	277.86	2,000.00	13.9%
5316 · MAINTENANCE - EQUIPMENT	0.00	500.00	0.0%
5318 · MAINTENANCE - GROUNDS	50.71	3,500.00	1.4%
5320 · PROPERTY TAX	0.00	4,000.00	0.0%
Total 5300 · BUILDING & MAINTENANCE	328.57	10,000.00	3.3%
5400 · VEHICLE EXPENSES			
5412 · FUEL/VAN-TRUCK-WINN.	46.21	200.00	23.1%
5414 · INSURANCE	660.56	3,600.00	18.3%
5416 · LICENSES	0.00	60.00	0.0%
5418 · MAINTENANCE	0.00	750.00	0.0%
Total 5400 · VEHICLE EXPENSES	706.77	4,610.00	15.3%
5500 · SURGERY CENTER EXP			
5512 · MEDICINE CLINIC	1,245.99	15,500.00	8.0%
5514 · VET SERVICES PURCHASED	1,000.00	18,250.00	5.5%
5516 · SUPPLIES CLINIC	878.81	16,850.00	5.2%
Total 5500 · SURGERY CENTER EXP	3,124.80	50,600.00	6.2%
Total Expense	39,184.55	531,969.00	7.4%
Net Ordinary Income	-21,237.80	-333,669.00	6.4%
Net Income	**-21,237.80**	**-333,669.00**	**6.4%**

HUMANE SOCIETY OF ST LUCIE CO
Profit & Loss Budget vs. Actual - FP Campus
October 2018

	Oct 18	Budget	% of Budget
Ordinary Income/Expense			
Income			
4000 · INCOME - GOVT			
4001 · GOVERNMENT SERVICES - FT PIERCE	11,083.34	133,000.00	8.3%
4003 · GOVERNMENT SERVICES - SLC	19,583.33	235,000.00	8.3%
Total 4000 · INCOME - GOVT	30,666.67	368,000.00	8.3%
4300 · INCOME - SERVICES			
4303 · PRIVATE CREMATIONS	0.00	300.00	0.0%
4304 · PRIVATE EUTHANISA	130.00	2,000.00	6.5%
4306 · ADOPTION SPAY/NEUTER FEE	2,950.12	48,000.00	6.1%
4310 · HEARTWORM / FLEA CONTROL	76.00		
4311 · OTI	120.00		
4312 · HOLDING FEE NON REFUNDABLE	0.00	600.00	0.0%
4313 · CLINIC	160.00		
4314 · PETCO	40.00	400.00	10.0%
4317 · OUTSIDE ADOPTIONS	40.00	700.00	5.7%
4804 · BOARDING/OVERNITE	2,992.00	6,500.00	46.0%
Total 4300 · INCOME - SERVICES	6,508.12	58,500.00	11.1%
4600 · INCOME - FUNDRAISING			
4652 · PAWS FOR RECOVERY	0.00	2,600.00	0.0%
Total 4600 · INCOME - FUNDRAISING	0.00	2,600.00	0.0%
4800 · INCOME - MISCELLANEOUS			
4806 · OVERAGE (DAILY WORK MONEY OVER	23.25		
4807 · OTHER / T SHIRTS / E COLLARS	170.00	4,000.00	4.3%
Total 4800 · INCOME - MISCELLANEOUS	193.25	4,000.00	4.8%
Total Income	37,368.04	433,100.00	8.6%
Gross Profit	37,368.04	433,100.00	8.6%
Expense			
5000 · SALARY/WAGES AND RELATED COSTS			
5010 · SALARY AND WAGES			
5011 · ADMINISTRATIVE	2,680.53	24,528.00	10.9%
5012 · SHELTER OPERATIONS	10,865.87	124,000.00	8.8%
5014 · MAINTENANCE	877.61		
5016 · SURGERY CENTER	3,099.75	46,050.00	6.7%
5017 · CLERICAL	993.32	14,150.00	7.0%
Total 5010 · SALARY AND WAGES	18,517.08	208,728.00	8.9%
5020 · PAYROLL TAXES			
5021 · ADMINISTRATION	283.96	1,877.00	15.1%
5022 · SHELTER	657.76	9,486.00	6.9%
5024 · MAINTENANCE	69.43		
5026 · CLINIC CENTER	417.02	3,523.00	11.8%
5027 · CLERICAL	87.96	1,082.00	8.1%
Total 5020 · PAYROLL TAXES	1,516.13	15,968.00	9.5%
5040 · WORKMANS COMPENSATION			
5041 · ADMINISTRATION	16.31	1,055.00	1.5%
5042 · SHELTER	313.96	5,332.00	5.9%
5044 · MAINTENANCE	28.54		
5046 · CLINIC	48.93	608.00	8.0%
5047 · CLERICAL	0.00	1,980.00	0.0%
Total 5040 · WORKMANS COMPENSATION	407.74	8,975.00	4.5%
Total 5000 · SALARY/WAGES AND RELATED COSTS	20,440.95	233,671.00	8.7%

HUMANE SOCIETY OF ST LUCIE CO
Profit & Loss Budget vs. Actual - FP Campus
October 2018

	Oct 18	Budget	% of Budget
5100 · ADMINISTRATIVE			
5110 · Tax Preparation	0.00	625.00	0.0%
5112 · BANK & CREDIT CARD FEES	907.86	13,100.00	6.9%
5114 · BOARD EXPENSES	0.00	350.00	0.0%
5120 · DUES & SUBSCRIPTIONS	207.43	130.00	159.6%
5124 · EMPLOYEE EXPENSE	0.00	800.00	0.0%
5126 · EQUIPMENT RENT/LEASE	798.38	8,500.00	9.4%
5132 · INSURANCE- DIRECTORS & OFFICERS	174.04	2,100.00	8.3%
5134 · INSURANCE- GENERAL & LIABILITY	638.59	7,800.00	8.2%
5135 · VOLUNTEER INSURANCE	12.50	150.00	8.3%
5140 · LICENSES & FEES	0.00	250.00	0.0%
5144 · P.O. BOX RENT	0.00	105.00	0.0%
5146 · PRINTING	58.51	450.00	13.0%
5148 · PROGRAMING- WEB SITE	695.95	700.00	99.4%
5150 · PROGRAMMING - COMPUTERS	80.00	2,000.00	4.0%
5152 · SECURITY	169.95	5,000.00	3.4%
5154 · SUPPLIES - OPERATING	12.44	900.00	1.4%
5156 · SUPPLIES - COMPUTER	99.62	725.00	13.7%
5158 · STAFF MILEAGE	147.32	1,800.00	8.2%
5160 · TELEPHONE-MOBILE	105.54	1,300.00	8.1%
5162 · TELEPHONE & FAX	766.78	11,000.00	7.0%
Total 5100 · ADMINISTRATIVE	4,874.91	57,785.00	8.4%
5200 · SHELTER OPERATIONS			
5216 · ADOPTION RETURNS REFUNDS	0.00	175.00	0.0%
5220 · CREMATORY SERVICES	516.20	5,300.00	9.7%
5226 · EMERGENCY SPECIAL TREATMENT	22.00	6,000.00	0.4%
5242 · SUPPLIES - CLEANING	2,133.60	20,000.00	10.7%
5246 · SUPPLIES - MEDICAL	5,815.12	70,000.00	8.3%
5250 · SUPPLIES - PET FOOD	3,909.37	45,000.00	8.7%
5252 · SUPPLIES - SAFETY	447.57	3,300.00	13.6%
5254 · UNIFORMS	0.00	500.00	0.0%
5256 · UTILITIES - ELECTRIC	1,956.46	18,000.00	10.9%
5258 · UTILITIES - GARBAGE	478.63	5,800.00	8.3%
5260 · UTILITIES - GAS HEAT	66.58	1,600.00	4.2%
5262 · UTILITIES - SEWER & WATER	311.91	4,200.00	7.4%
Total 5200 · SHELTER OPERATIONS	15,657.44	179,875.00	8.7%
5300 · BUILDING & MAINTENANCE			
5314 · MAINTENANCE - BUILDING	5.68	2,500.00	0.2%
5316 · MAINTENANCE - EQUIPMENT	0.00	500.00	0.0%
5318 · MAINTENANCE - GROUNDS	173.52	2,500.00	6.9%
Total 5300 · BUILDING & MAINTENANCE	179.20	5,500.00	3.3%
5400 · VEHICLE EXPENSES			
5412 · FUEL/VAN-TRUCK-WINN.	0.00	675.00	0.0%
5414 · INSURANCE	660.54	3,600.00	18.3%
5416 · LICENSES	0.00	60.00	0.0%
5418 · MAINTENANCE	0.00	1,000.00	0.0%
Total 5400 · VEHICLE EXPENSES	660.54	5,335.00	12.4%
5500 · SURGERY CENTER EXP			
5512 · MEDICINE CLINIC	371.89	3,500.00	10.6%
5516 · SUPPLIES CLINIC	350.00	12,000.00	2.9%
Total 5500 · SURGERY CENTER EXP	721.89	15,500.00	4.7%
5600 · FUNDRAISING			
5623 · PETCO	0.00	150.00	0.0%
5642 · PAWS FOR RECOVERY EXPENSE	0.00	1,500.00	0.0%
Total 5600 · FUNDRAISING	0.00	1,650.00	0.0%

HUMANE SOCIETY OF ST LUCIE CO
Profit & Loss Budget vs. Actual - FP Campus
October 2018

	Oct 18	Budget	% of Budget
5700 · CAPITAL EXPENDITURES			
5714 · CAPITAL EXPENDITURES-BUILDING	0.00	2,500.00	0.0%
Total 5700 · CAPITAL EXPENDITURES	0.00	2,500.00	0.0%
Total Expense	42,534.93	501,816.00	8.5%
Net Ordinary Income	-5,166.89	-68,716.00	7.5%
Net Income	**-5,166.89**	**-68,716.00**	**7.5%**

HUMANE SOCIETY OF ST LUCIE CO
Balance Sheet
As of November 30, 2018

	Nov 30, 18
ASSETS	
Current Assets	
Checking/Savings	
1000 · CENTERSTATE -OPERATING #1008965	4,221.62
1003 · SEACOAST OPERATING #4217190441	113,561.27
1005 · CENTERSTATE - MM #1008944	6,610.99
1010 · SEACOAST MM#4217190361 ANIMAL C	127,159.30
1160 · PETTY CASH	664.00
Total Checking/Savings	252,217.18
Other Current Assets	
1410 · GOVT SERVICE A/R -PSL	810.00
1415 · GOVT SERVICES A/R - SLC	670.00
Total Other Current Assets	1,480.00
Total Current Assets	253,697.18
Fixed Assets	
1610 · BLDGS	725,561.74
1611 · NEW BUILDING	3,447,753.19
1612 · LAND	198,101.41
1615 · LEASE HOLD IMPROVMENTS	3,925.00
1620 · EQPT	218,393.88
1621 · EQPT GLADES	55,474.81
1640 · VEHICLES	95,883.95
1670 · ACCUMULATED DEPRECIATION	-1,270,555.46
Total Fixed Assets	3,474,538.52
Other Assets	
1650 · LOAN COST	6,500.00
1671 · ACCUMULATED AMORTIZATION	-1,733.32
1710 · PREPAID INSURANCE	53,355.60
1719 · DEPOSITS	1,076.00
Total Other Assets	59,198.28
TOTAL ASSETS	**3,787,433.98**
LIABILITIES & EQUITY	
Liabilities	
Current Liabilities	
Accounts Payable	
2100 · ACCOUNTS PAYABLE	2,335.68
Total Accounts Payable	2,335.68
Other Current Liabilities	
2105 · IMPOUND FEES PAYABLE	940.00

HUMANE SOCIETY OF ST LUCIE CO
Balance Sheet
As of November 30, 2018

	Nov 30, 18
2106 · COUNTY LICENSE PAYABLE	525.00
2107 · FORT PIERCE LICENSE PAYABLE	595.00
2109 · FORT PIERCE PREPAID SERVICES	-11,083.34
2113 · PSL ANIMAL CONTROL PREPAID SERV	127,083.38
2610 · WAGES PAYABLE	10,652.52
2615 · PAYROLL TAXES PAYABLE	-1,493.19
2631 · ACCRUED VACATION TIME	25,124.58
2645 · STATE UNEMPLOYMENT PAYABLE	4,467.29
Total Other Current Liabilities	156,811.24
Total Current Liabilities	159,146.92
Long Term Liabilities	
2900 · M/P HARBOR COMMUNITY BANK	973,196.00
Total Long Term Liabilities	973,196.00
Total Liabilities	1,132,342.92
Equity	
3900 · NET ASSETS	2,700,874.84
Net Income	-45,783.78
Total Equity	2,655,091.06
TOTAL LIABILITIES & EQUITY	**3,787,433.98**

HUMANE SOCIETY OF ST LUCIE CO
PROFIT & LOSS ACTUAL YTD VS ANNUAL BUDGET
November 2018

	Nov 18	Budget	% of Budget
Ordinary Income/Expense			
Income			
4000 · INCOME - GOVT			
4001 · GOVERNMENT SERVICES - FT PIERCE	11,083.34		
4002 · GOVERNMENT SERVICES - PSL	12,993.33		
4003 · GOVERNMENT SERVICES - SLC	19,793.33		
Total 4000 · INCOME - GOVT	43,870.00		
4100 · INCOME -MEMBERSHIPS			
4101 · MEMBERSHIP	2,225.00		
Total 4100 · INCOME -MEMBERSHIPS	2,225.00		
4300 · INCOME - SERVICES			
4304 · PRIVATE EUTHANISA	320.00		
4306 · ADOPTION SPAY/NEUTER FEE	6,000.50		
4308 · MICRO CHIPS	90.00		
4309 · RABIES SHOTS	140.00		
4310 · HEARTWORM / FLEA CONTROL	4,820.33		
4311 · OTI	275.00		
4312 · HOLDING FEE NON REFUNDABLE	140.00		
4313 · CLINIC	4,646.11		
4804 · BOARDING/OVERNITE	1,060.00		
4805 · X RAY MACHINE	62.00		
Total 4300 · INCOME - SERVICES	17,553.94		
4600 · INCOME - FUNDRAISING			
4603 · PET CANISTERS	492.51		
4604 · DONATIONS	4,344.45		
4605 · MEMORIALS	320.00		
4619 · GOLF TOURNAMENT	316.00		
4624 · THRIFT STORE	6,688.88		
4653 · CHESTNUT FUND	3,374.13		
Total 4600 · INCOME - FUNDRAISING	15,535.97		
4800 · INCOME - MISCELLANEOUS			
4806 · OVERAGE (DAILY WORK MONEY OVER	391.92		
4807 · OTHER / T SHIRTS / E COLLARS	380.00		
4808 · SURCHARGE CREDIT CARD	252.95		
Total 4800 · INCOME - MISCELLANEOUS	1,024.87		
Total Income	80,209.78		
Gross Profit	80,209.78		
Expense			
5000 · SALARY/WAGES AND RELATED COSTS			
5010 · SALARY AND WAGES			
5011 · ADMINISTRATIVE	10,171.58		
5012 · SHELTER OPERATIONS	25,292.47		
5014 · MAINTENANCE	2,856.46		
5016 · SURGERY CENTER	16,156.04		
5017 · CLERICAL	3,623.49		
Total 5010 · SALARY AND WAGES	58,100.04		
5020 · PAYROLL TAXES			
5021 · ADMINISTRATION	1,013.51		
5022 · SHELTER	2,357.25		
5024 · MAINTENANCE	218.53		
5026 · CLINIC CENTER	1,236.15		
5027 · CLERICAL	277.02		
Total 5020 · PAYROLL TAXES	5,102.46		
Total 5000 · SALARY/WAGES AND RELATED COSTS	63,202.50		

HUMANE SOCIETY OF ST LUCIE CO
PROFIT & LOSS ACTUAL YTD VS ANNUAL BUDGET
November 2018

	Nov 18	Budget	% of Budget
5100 · ADMINISTRATIVE			
5112 · BANK & CREDIT CARD FEES	9.09		
5114 · BOARD EXPENSES	203.00		
5126 · EQUIPMENT RENT/LEASE	1,007.00		
5139 · INTEREST EXPENSE	6,850.93		
5146 · PRINTING	34.50		
5154 · SUPPLIES - OPERATING	79.37		
5158 · STAFF MILEAGE	446.90		
5160 · TELEPHONE-MOBILE	442.77		
5162 · TELEPHONE & FAX	2,189.32		
5165 · THRIFT STORE LEASE PAYMENT	1,500.00		
Total 5100 · ADMINISTRATIVE	12,762.88		
5200 · SHELTER OPERATIONS			
5220 · CREMATORY SERVICES	-367.00		
5226 · EMERGENCY SPECIAL TREATMENT	2,166.99		
5242 · SUPPLIES - CLEANING	1,593.49		
5246 · SUPPLIES - MEDICAL	4,610.84		
5250 · SUPPLIES - PET FOOD	1,039.26		
5252 · SUPPLIES - SAFETY	180.77		
5256 · UTILITIES - ELECTRIC	3,967.73		
5258 · UTILITIES - GARBAGE	478.63		
5260 · UTILITIES - GAS HEAT	928.48		
5262 · UTILITIES - SEWER & WATER	1,486.95		
Total 5200 · SHELTER OPERATIONS	16,086.14		
5300 · BUILDING & MAINTENANCE			
5314 · MAINTENANCE - BUILDING	20.11		
5318 · MAINTENANCE - GROUNDS	539.00		
5320 · PROPERTY TAX	3,982.42		
Total 5300 · BUILDING & MAINTENANCE	4,541.53		
5400 · VEHICLE EXPENSES			
5412 · FUEL/VAN-TRUCK-WINN.	45.00		
5414 · INSURANCE	782.10		
5416 · LICENSES	115.85		
5418 · MAINTENANCE	818.72		
Total 5400 · VEHICLE EXPENSES	1,761.67		
5500 · SURGERY CENTER EXP			
5512 · MEDICINE CLINIC	2,975.69		
5514 · VET SERVICES PURCHASED	1,600.00		
5516 · SUPPLIES CLINIC	1,043.22		
Total 5500 · SURGERY CENTER EXP	5,618.91		
5600 · FUNDRAISING			
5618 · FUR BALL	34.50		
5638 · FOSTER EXPENSE	479.20		
5642 · PAWS FOR RECOVERY EXPENSE	300.00		
Total 5600 · FUNDRAISING	813.70		
9015 · Payroll Expenses	4,615.38		
Total Expense	109,402.71		
Net Ordinary Income	-29,192.93		
Net Income	**-29,192.93**		

HUMANE SOCIETY OF ST LUCIE CO
Balance Sheet
As of December 31, 2018

	Dec 31, 18
ASSETS	
Current Assets	
Checking/Savings	
1000 · CENTERSTATE -OPERATING #1008965	3,962.61
1003 · SEACOAST OPERATING #4217190441	110,049.93
1005 · CENTERSTATE - MM #1008944	6,611.53
1010 · SEACOAST MM#4217190361 ANIMAL C	114,440.48
1160 · PETTY CASH	664.00
Total Checking/Savings	235,728.55
Other Current Assets	
1410 · GOVT SERVICE A/R -PSL	120.00
1415 · GOVT SERVICES A/R - SLC	140.00
Total Other Current Assets	260.00
Total Current Assets	235,988.55
Fixed Assets	
1610 · BLDGS	725,561.74
1611 · NEW BUILDING	3,447,753.19
1612 · LAND	198,101.41
1615 · LEASE HOLD IMPROVMENTS	3,925.00
1620 · EQPT	218,393.88
1621 · EQPT GLADES	55,474.81
1640 · VEHICLES	95,883.95
1670 · ACCUMULATED DEPRECIATION	-1,270,555.46
Total Fixed Assets	3,474,538.52
Other Assets	
1650 · LOAN COST	6,500.00
1671 · ACCUMULATED AMORTIZATION	-1,733.32
1710 · PREPAID INSURANCE	52,765.39
1719 · DEPOSITS	1,076.00
Total Other Assets	58,608.07
TOTAL ASSETS	**3,769,135.14**
LIABILITIES & EQUITY	
Liabilities	
Current Liabilities	
Accounts Payable	
2100 · ACCOUNTS PAYABLE	5,652.04
Total Accounts Payable	5,652.04
Other Current Liabilities	
2105 · IMPOUND FEES PAYABLE	1,075.00

HUMANE SOCIETY OF ST LUCIE CO
Balance Sheet
As of December 31, 2018

	Dec 31, 18
2106 · COUNTY LICENSE PAYABLE	455.00
2107 · FORT PIERCE LICENSE PAYABLE	575.00
2108 · ST. LUCIE CO PREPAID SERVIC	-19,583.33
2109 · FORT PIERCE PREPAID SERVICES	-22,166.68
2113 · PSL ANIMAL CONTROL PREPAID SERV	114,375.05
2610 · WAGES PAYABLE	10,652.52
2615 · PAYROLL TAXES PAYABLE	-1,811.28
2631 · ACCRUED VACATION TIME	25,124.58
2645 · STATE UNEMPLOYMENT PAYABLE	4,706.87
Total Other Current Liabilities	113,402.73
Total Current Liabilities	119,054.77
Long Term Liabilities	
2900 · M/P HARBOR COMMUNITY BANK	967,601.12
Total Long Term Liabilities	967,601.12
Total Liabilities	1,086,655.89
Equity	
3900 · NET ASSETS	2,700,676.84
Net Income	-18,197.59
Total Equity	2,682,479.25
TOTAL LIABILITIES & EQUITY	**3,769,135.14**

HUMANE SOCIETY OF ST LUCIE CO
PROFIT & LOSS ACTUAL YTD VS ANNUAL BUDGET
October through December 2018

	Oct - Dec 18	Budget	% of Budget
Ordinary Income/Expense			
Income			
4000 · INCOME - GOVT			
4001 · GOVERNMENT SERVICES - FT PIERCE	33,250.02		
4002 · GOVERNMENT SERVICES - PSL	39,054.99		
4003 · GOVERNMENT SERVICES - SLC	59,559.99		
Total 4000 · INCOME - GOVT	131,865.00		
4100 · INCOME -MEMBERSHIPS			
4101 · MEMBERSHIP	18,690.00		
Total 4100 · INCOME -MEMBERSHIPS	18,690.00		
4300 · INCOME - SERVICES			
4304 · PRIVATE EUTHANISA	875.00		
4306 · ADOPTION SPAY/NEUTER FEE	17,499.50		
4308 · MICRO CHIPS	300.00		
4309 · RABIES SHOTS	570.00		
4310 · HEARTWORM / FLEA CONTROL	14,400.35		
4311 · OTI	575.00		
4312 · HOLDING FEE NON REFUNDABLE	280.00		
4313 · CLINIC	14,403.11		
4314 · PETCO	120.00		
4317 · OUTSIDE ADOPTIONS	40.00		
4506 · PSL A C EMERGENCY VET SERVICES	927.95		
4804 · BOARDING/OVERNITE	5,202.00		
4805 · X RAY MACHINE	62.00		
Total 4300 · INCOME - SERVICES	55,254.91		
4600 · INCOME - FUNDRAISING			
4601 · FOSTERING - DOG	20.00		
4602 · FOSTERING - CAT	435.19		
4603 · PET CANISTERS	1,491.58		
4604 · DONATIONS	36,904.97		
4605 · MEMORIALS	820.00		
4608 · SPECIAL MEDICAL	250.00		
4617 · DOG WALK	150.00		
4619 · GOLF TOURNAMENT	6,224.00		
4624 · THRIFT STORE	18,752.90		
4652 · PAWS FOR RECOVERY	400.00		
4653 · CHESTNUT FUND	3,374.13		
Total 4600 · INCOME - FUNDRAISING	68,822.77		
4700 · INCOME - INTEREST			
4745 · INTEREST INCOME	7.10		
Total 4700 · INCOME - INTEREST	7.10		
4800 · INCOME - MISCELLANEOUS			
4806 · OVERAGE (DAILY WORK MONEY OVER	1,593.61		
4807 · OTHER / T SHIRTS / E COLLARS	4,259.20		
4808 · SURCHARGE CREDIT CARD	822.10		
Total 4800 · INCOME - MISCELLANEOUS	6,674.91		
Total Income	281,314.69		
Gross Profit	281,314.69		

HUMANE SOCIETY OF ST LUCIE CO
PROFIT & LOSS ACTUAL YTD VS ANNUAL BUDGET
October through December 2018

	Oct - Dec 18	Budget	% of Budget
Expense			
5000 · SALARY/WAGES AND RELATED COSTS			
5010 · SALARY AND WAGES			
5011 · ADMINISTRATIVE	22,765.84		
5012 · SHELTER OPERATIONS	68,595.86		
5014 · MAINTENANCE	6,677.68		
5016 · SURGERY CENTER	37,874.00		
5017 · CLERICAL	10,279.27		
Total 5010 · SALARY AND WAGES	136,192.65		
5020 · PAYROLL TAXES			
5021 · ADMINISTRATION	2,004.51		
5022 · SHELTER	5,468.01		
5024 · MAINTENANCE	507.41		
5026 · CLINIC CENTER	2,929.57		
5027 · CLERICAL	786.24		
Total 5020 · PAYROLL TAXES	11,695.74		
5040 · WORKMANS COMPENSATION			
5041 · ADMINISTRATION	65.24		
5042 · SHELTER	1,255.84		
5044 · MAINTENANCE	114.16		
5046 · CLINIC	195.72		
Total 5040 · WORKMANS COMPENSATION	1,630.96		
Total 5000 · SALARY/WAGES AND RELATED COSTS	149,519.35		
5100 · ADMINISTRATIVE			
5112 · BANK & CREDIT CARD FEES	1,256.37		
5114 · BOARD EXPENSES	203.00		
5120 · DUES & SUBSCRIPTIONS	826.09		
5124 · EMPLOYEE EXPENSE	1,763.76		
5126 · EQUIPMENT RENT/LEASE	4,067.42		
5132 · INSURANCE- DIRECTORS & OFFICERS	696.16		
5134 · INSURANCE- GENERAL & LIABILITY	2,421.34		
5135 · VOLUNTEER INSURANCE	50.00		
5139 · INTEREST EXPENSE	13,765.95		
5142 · POSTAGE GENERAL	2,578.95		
5144 · P.O. BOX RENT	338.00		
5146 · PRINTING	93.01		
5148 · PROGRAMING- WEB SITE	695.95		
5150 · PROGRAMMING - COMPUTERS	1,125.20		
5152 · SECURITY	1,771.04		
5154 · SUPPLIES - OPERATING	480.19		
5156 · SUPPLIES - COMPUTER	394.57		
5158 · STAFF MILEAGE	1,431.94		
5160 · TELEPHONE-MOBILE	907.21		
5162 · TELEPHONE & FAX	6,511.13		
5165 · THRIFT STORE LEASE PAYMENT	4,500.00		
Total 5100 · ADMINISTRATIVE	45,877.28		
5200 · SHELTER OPERATIONS			
5220 · CREMATORY SERVICES	229.30		
5226 · EMERGENCY SPECIAL TREATMENT	4,122.94		
5242 · SUPPLIES - CLEANING	10,165.83		
5246 · SUPPLIES - MEDICAL	20,096.45		
5250 · SUPPLIES - PET FOOD	9,053.50		
5252 · SUPPLIES - SAFETY	1,090.24		
5256 · UTILITIES - ELECTRIC	12,330.15		
5258 · UTILITIES - GARBAGE	1,435.89		
5260 · UTILITIES - GAS HEAT	1,136.28		
5262 · UTILITIES - SEWER & WATER	5,139.03		
Total 5200 · SHELTER OPERATIONS	64,799.61		

HUMANE SOCIETY OF ST LUCIE CO
PROFIT & LOSS ACTUAL YTD VS ANNUAL BUDGET
October through December 2018

	Oct - Dec 18	Budget	% of Budget
5300 · BUILDING & MAINTENANCE			
5314 · MAINTENANCE - BUILDING	584.37		
5318 · MAINTENANCE - GROUNDS	1,017.13		
5320 · PROPERTY TAX	3,982.42		
Total 5300 · BUILDING & MAINTENANCE	5,583.92		
5400 · VEHICLE EXPENSES			
5412 · FUEL/VAN-TRUCK-WINN.	551.72		
5414 · INSURANCE	3,656.04		
5416 · LICENSES	115.85		
5418 · MAINTENANCE	820.50		
Total 5400 · VEHICLE EXPENSES	5,144.11		
5500 · SURGERY CENTER EXP			
5512 · MEDICINE CLINIC	11,358.82		
5514 · VET SERVICES PURCHASED	5,200.00		
5516 · SUPPLIES CLINIC	3,993.07		
5500 · SURGERY CENTER EXP - Other	-19.20		
Total 5500 · SURGERY CENTER EXP	20,532.69		
5600 · FUNDRAISING			
5618 · FUR BALL	34.50		
5620 · GENERAL FUND RAISING EXP	6,709.53		
5622 · PLAQUES	19.49		
5624 · GOLF TOURNAMENT	8,629.04		
5636 · VOLUNTEERS EXP.	35.13		
5638 · FOSTER EXPENSE	538.66		
5642 · PAWS FOR RECOVERY EXPENSE	300.00		
5643 · CHESTNUT EXPENSE	1,084.13		
Total 5600 · FUNDRAISING	17,350.48		
5650 · MARKETING & PROMOTION			
5653 · T-SHIRTS	366.30		
Total 5650 · MARKETING & PROMOTION	366.30		
9015 · Payroll Expenses	7,692.30		
Total Expense	316,866.04		
Net Ordinary Income	-35,551.35		
Other Income/Expense			
Other Income			
7000 · BEQUEST	17,353.76		
Total Other Income	17,353.76		
Net Other Income	17,353.76		
Net Income	**-18,197.59**		

HUMANE SOCIETY OF ST LUCIE CO
P & L For Animal Control
January 2019

	CAMPUS - FP	CAMPUS - PSL	TOTAL
Ordinary Income/Expense			
Income			
4000 · INCOME - GOVT			
4001 · GOVERNMENT SERVICES - FT PIERCE	11,083.34	0.00	11,083.34
4002 · GOVERNMENT SERVICES - PSL	0.00	12,708.33	12,708.33
4003 · GOVERNMENT SERVICES - SLC	19,583.33	0.00	19,583.33
Total 4000 · INCOME - GOVT	30,666.67	12,708.33	43,375.00
4100 · INCOME -MEMBERSHIPS			
4101 · MEMBERSHIP	0.00	1,000.00	1,000.00
Total 4100 · INCOME -MEMBERSHIPS	0.00	1,000.00	1,000.00
4300 · INCOME - SERVICES			
4303 · PRIVATE CREMATIONS	86.00	0.00	86.00
4304 · PRIVATE EUTHANISA	150.00	100.00	250.00
4305 · RETURN TO OWNER FEE	0.00	0.00	0.00
4306 · ADOPTION SPAY/NEUTER FEE	3,896.00	4,530.00	8,426.00
4308 · MICRO CHIPS	0.00	0.00	0.00
4309 · RABIES SHOTS	0.00	20.00	20.00
4310 · HEARTWORM / FLEA CONTROL	287.00	1,773.00	2,060.00
4311 · OTI	100.00	0.00	100.00
4312 · HOLDING FEE NON REFUNDABLE	20.00	380.00	400.00
4313 · CLINIC	0.00	737.00	737.00
4314 · PETCO	0.00	0.00	0.00
4506 · PSL A C EMERGENCY VET SERVICES	0.00	616.99	616.99
4804 · BOARDING/OVERNITE	335.00	240.00	575.00
Total 4300 · INCOME - SERVICES	4,874.00	8,396.99	13,270.99
4600 · INCOME - FUNDRAISING			
4602 · FOSTERING - CAT	0.00	0.00	0.00
4609 · GENERAL FUND RAISING	0.00	0.00	0.00
Total 4600 · INCOME - FUNDRAISING	0.00	0.00	0.00
4800 · INCOME - MISCELLANEOUS			
4806 · OVERAGE (DAILY WORK MONEY OVER	57.75	169.42	227.17
4807 · OTHER / T SHIRTS / E COLLARS	125.00	20.00	145.00
4808 · SURCHARGE CREDIT CARD	13.56	0.00	13.56
Total 4800 · INCOME - MISCELLANEOUS	196.31	189.42	385.73
Total Income	35,736.98	22,294.74	58,031.72
Gross Profit	35,736.98	22,294.74	58,031.72
Expense			
5000 · SALARY/WAGES AND RELATED COSTS			
5010 · SALARY AND WAGES			
5011 · ADMINISTRATIVE	2,183.40	2,182.99	4,366.39
5012 · SHELTER OPERATIONS	10,499.24	6,542.61	17,041.85
5014 · MAINTENANCE	465.56	299.40	764.96
5016 · SURGERY CENTER	3,169.53	4,395.22	7,564.75
5017 · CLERICAL	1,196.98	2,212.97	3,409.95
Total 5010 · SALARY AND WAGES	17,514.71	15,633.19	33,147.90
5020 · PAYROLL TAXES			
5021 · ADMINISTRATION	211.53	211.54	423.07
5022 · SHELTER	1,066.04	860.72	1,926.76
5024 · MAINTENANCE	0.00	0.00	0.00
5026 · CLINIC CENTER	451.83	451.82	903.65
5027 · CLERICAL	73.44	130.44	203.88
Total 5020 · PAYROLL TAXES	1,802.84	1,654.52	3,457.36
Total 5000 · SALARY/WAGES AND RELATED COSTS	19,317.55	17,287.71	36,605.26
5100 · ADMINISTRATIVE			
5112 · BANK & CREDIT CARD FEES	0.00	-0.16	-0.16
5114 · BOARD EXPENSES	0.00	0.00	0.00
5120 · DUES & SUBSCRIPTIONS	0.00	0.00	0.00
5124 · EMPLOYEE EXPENSE	0.00	0.00	0.00
5126 · EQUIPMENT RENT/LEASE	127.80	65.95	193.75
5139 · INTEREST EXPENSE	0.00	3,955.84	3,955.84
5140 · LICENSES & FEES	731.00	85.00	816.00
5142 · POSTAGE GENERAL	0.00	0.00	0.00
5146 · PRINTING	542.81	503.50	1,046.31
5148 · PROGRAMING- WEB SITE	0.00	0.00	0.00

HUMANE SOCIETY OF ST LUCIE CO
P & L For Animal Control
January 2019

	CAMPUS - FP	CAMPUS - PSL	TOTAL
5150 · PROGRAMMING - COMPUTERS	0.00	0.00	0.00
5152 · SECURITY	0.00	0.00	0.00
5154 · SUPPLIES - OPERATING	0.00	87.90	87.90
5156 · SUPPLIES - COMPUTER	0.00	92.97	92.97
5158 · STAFF MILEAGE	99.76	99.76	199.52
5160 · TELEPHONE-MOBILE	142.55	142.55	285.10
5162 · TELEPHONE & FAX	821.12	1,346.82	2,167.94
5164 · TUITION	0.00	0.00	0.00
Total 5100 · ADMINISTRATIVE	2,465.04	6,380.13	8,845.17
5200 · SHELTER OPERATIONS			
5218 · ANIMAL EQUIPMENT	0.00	0.00	0.00
5220 · CREMATORY SERVICES	179.00	89.00	268.00
5226 · EMERGENCY SPECIAL TREATMENT	200.00	857.25	1,057.25
5227 · VMC SETTLEMENT DR. GERAGHTY	0.00	0.00	0.00
5238 · SPAY/NEUTER ADOPTIONS	0.00	0.00	0.00
5242 · SUPPLIES - CLEANING	213.36	1,223.53	1,436.89
5246 · SUPPLIES - MEDICAL	6,609.82	4,987.11	11,596.93
5250 · SUPPLIES - PET FOOD	881.35	888.83	1,770.18
5252 · SUPPLIES - SAFETY	119.77	143.58	263.35
5256 · UTILITIES - ELECTRIC	1,185.43	2,080.43	3,265.86
5258 · UTILITIES - GARBAGE	478.63	0.00	478.63
5260 · UTILITIES - GAS HEAT	168.20	0.00	168.20
5262 · UTILITIES - SEWER & WATER	256.26	1,360.44	1,616.70
Total 5200 · SHELTER OPERATIONS	10,291.82	11,630.17	21,921.99
5300 · BUILDING & MAINTENANCE			
5314 · MAINTENANCE - BUILDING	0.00	157.05	157.05
5316 · MAINTENANCE - EQUIPMENT	0.00	0.00	0.00
5318 · MAINTENANCE - GROUNDS	483.89	645.00	1,128.89
Total 5300 · BUILDING & MAINTENANCE	483.89	802.05	1,285.94
5400 · VEHICLE EXPENSES			
5412 · FUEL/VAN-TRUCK-WINN.	108.25	0.00	108.25
5414 · INSURANCE	260.70	260.70	521.40
5418 · MAINTENANCE	0.00	0.00	0.00
Total 5400 · VEHICLE EXPENSES	368.95	260.70	629.65
5500 · SURGERY CENTER EXP			
5512 · MEDICINE CLINIC	541.63	3,296.35	3,837.98
5516 · SUPPLIES CLINIC	340.73	1,048.18	1,388.91
Total 5500 · SURGERY CENTER EXP	882.36	4,344.53	5,226.89
5600 · FUNDRAISING			
5620 · GENERAL FUND RAISING EXP	0.00	0.00	0.00
5623 · PETCO	0.00	0.00	0.00
5625 · BRICKS	0.00	0.00	0.00
5638 · FOSTER EXPENSE	0.00	0.00	0.00
5643 · CHESTNUT EXPENSE	94.95	0.00	94.95
Total 5600 · FUNDRAISING	94.95	0.00	94.95
5700 · CAPITAL EXPENDITURES			
5714 · CAPITAL EXPENDITURES-BUILDING	0.00	0.00	0.00
5718 · CAPITAL EXPENDITURES-SURGERY	0.00	4,176.00	4,176.00
Total 5700 · CAPITAL EXPENDITURES	0.00	4,176.00	4,176.00
9015 · Payroll Expenses	1,538.46	1,538.46	3,076.92
Total Expense	35,443.02	46,419.75	81,862.77
Net Ordinary Income	293.96	-24,125.01	-23,831.05
Net Income	**293.96**	**-24,125.01**	**-23,831.05**

THE SUNRISE CITY
FORT PIERCE
ANIMAL CONTROL
Florida

TO : Nicholas Mimms, City Manager

FROM : Peggy Arraiz, Code Compliance Manager

SUBJECT : Humane Society Contract Follow up

DATE : November 2, 2018

This memo is a follow up to the meeting that occurred between the City of Fort Pierce, the City of Port St. Lucie and St. Lucie County, which has been shared by all involved. There are three key items that we would like to bring forward to the executive level for discussion with regards to the contractual agreement with the Humane Society.

The first is that all three jurisdictions agree that it would be in our best interests to enter into a single or common contractual agreement with the Humane Society.

The second item is that we collectively agree with the establishment of a Humane Society Operational (Steering) committee that each entity (SLC, FP, & PSL) would have a member on the committee. This committee would meet the first week of each month. Prior to the Operations committee meeting, all committee members will be provided with a report of the operational issues, concerns and challenges from the Humane Society's Shelter manager.

Thirdly, it was discussed that the Humane Society's annual audit and budget analysis be completed by the St. Lucie County Office of Management and Budget (OMB). Additionally, to have a monthly financial statement accompany the monthly invoice that is to be submitted for review the first week of each month.

The items listed above would need to be negotiated into the agreement as seen fit.

There were many other areas of discussion regarding the concerns that have been identified in inspections over the last year, as well as some thoughts and ideas and suggestions for an improved program provided by the Humane Society. These will be discussed with Humane Society representatives at a scheduled meeting next week

Please let me know if you have any questions regarding this update. I will provide additional updates as events occur.

THE SUNRISE CITY
FORT PIERCE
CODE ENFORCEMENT
Florida

TO : Nicholas Mimms, City Manager

FROM : Peggy Arraiz, Code Compliance Manager

SUBJECT : Humane Society Update

DATE : January 22, 2019

In October, when the City Commission met with the Humane Society, in addition to changing the contract to month-to-month payments, the Commission wanted to see a unified contract and to be more involved in the business decisions of the Humane Society. Specifically, several Commissioners expressed an interest in having a city representative on the Board of Directors.

Since that time, Janey Vanderhorst and I have participated in several meetings with representatives of the three local jurisdictions and Humane Society. Heather Young, Assistant Attorney for St. Lucie County, indicated that it was not appropriate for a city / county representative to sit on the Board of Directors and opined that a steering or operational committee that made recommendations to the Board of Directors was the most appropriate solution. Acting City Attorney Ben Bryan deferred to the County Attorney in this matter.

To date, the formation of this committee has been the only item addressed. This committee would be tasked with providing suggestions and feedback to the Humane Society Board of Directors to help them establish a better business plan, help them develop a path to sustainability, help them meet their mission statement and also provide a method of open communication between the jurisdictions and the Board of Directors.

Despite multiple meetings and emails, the Humane Society Board of Directors has opposed all suggestions and efforts submitted by the local jurisdictions to form this committee and their proposed committee in no way meets the Cities' and County's intent and goals. This in turn has resulted in severe deterioration of communication and cooperation between the Humane Society and the jurisdictions.

We will continue to work with our follow counter parts to find an effective solution to this matter; however, I recommend direct communication between yourself and the County Administrator to discuss possible alternatives should our efforts fail.

City Commission Regular Meeting **11.a.**

Meeting Date: 02/19/2019

Re: Assignment of Lease Agreement for Little Jim's

Submitted For: Dean Kubitschek, Director of Marina, Marina

SUBJECT:

Approval of the assignment of Lease Agreement for Little Jim's Bait and Tackle, Inc. from Richard and Rita King to Diego Larroude and Donna Qvarnstom-Burke under the same terms and conditions of the existing lease with an expiration date of April 30, 2025.

SUMMARY:

Little' Jim's lease agreement assignment from Richard and Rita King to Diego Larroude and Donna Qvarnstom-Burke. Lease extention expires on April 30, 2025.

RECOMMENDATION:

Approve

ALTERNATIVES:

No Action

RESPONSIBLE STAFF:

Marina Manager, Dean Kubitschek

COORDINATED WITH:

City Manager, Nicholas Mimms

Fiscal Impact

OTHER INFORMATION:

None

Attachments

Little Jim's Letter

Memo from P. Sweeney re- Little Jim's Bait and Tackle Lease

Form Review

Inbox	Reviewed By	Date
City Manager	Kaitlyn Ballard	01/16/2019 11:26 AM
City Manager	Nick Mimms	01/24/2019 04:03 PM

Form Started By: Pat Danise Started On: 01/15/2019 12:12 PM

Final Approval Date: 01/28/2019

NOTICE OF CONSENT

TO: Nick Mimms, City Manager and Representative for City Commission
City of Fort Pierce
100 N. U.S. Highway 1
Fort Pierce, Florida 34950

TO ALL IT MAY CONCERN:

Please accept this document as formal notice of the consent and request of Little Jim's Bait and Tackle, Inc., and principals and it's guarantors, Richard A. King and Rita King for the Assignment of the Lease Agreement for Little Jim's property entered into on April 3, 2015, to Diego M. Larroude and Donna Qvarnstrom-Burke per agreement between the parties.

Dated January 15, 2019.

Little Jim's Bait and Tackle, Inc.

RICHARD KING

RITA KING

THE SUNRISE CITY
FORT PIERCE
CITY ATTORNEY'S OFFICE Florida

TO : DEAN KUBITSCHECK, MARINA DRECTOR

FROM : Pete Sweeney, City Attorney

RE : Little Jim's Bait and Tackle Lease

DATE : January 17, 2019

The following Lease have been approved as to Legal Form and Correctness.

PS/mm

cc: Nicholas C. Mimms, P.E., City Manager
Linda Cox, City Clerk

OK
1/22/19

Received
JAN 1 0 2019
City of Fort Pierce
City Manager's Office

THE SUNRISE CITY
FORT PIERCE
CITY ATTORNEY'S OFFICE Florida

CITY ATTORNEY USE ONLY

Date Received:	
Assigned To:	
File:	
Due Date:	
Hours:	

Received
JAN 16 2019
City of Fort Pierce
City Manager's Office

RECEIVED
JAN 16 2019
BY

REQUEST FOR LEGAL SERVICES

TO: CITY ATTORNEY

SUBMITTED BY: **MARINA MANAGER, DEAN KUBITSCHEK**

CITY MANAGER AUTHORIZATION: NICHOLAS C. MIMMS, P.E., CITY MANAGER NCM

RE: LITTLE JIM'S BAIT AND TACKLE LEASE

DATE: JANUARY 16, 2019

Service Required: (please circle or underline)

Review Documents	**Draft Document**	**Written Opinion Requested**
Attend Meetings	**Advise**	**Other:** _____

Upon review and/or "Approval as to Form and Correctness," the Department submitting the RLS is responsible for placement of any related item on a Commission or Board Agenda.

1. **Brief statement of the nature of the request or problem:** Request legal department review documents to verify the ability to reassign the Little Jim's Bait and Tackle, Inc. lease to Diego M. Larroude and Donna Qvarnstrom-Burke with Commission approval.

2. **Discussion of the implications and the possible impact if not apparent from preceding information:** n/a

3. **Time considerations and their significance:** Would like to place on the agenda for the February 4th Agenda Meeting (deadline January 23rd).

4. **Are City funds required? If so, list approvals obtained for expenditure of funds:** No

5. **Factual background:**

- Little Jim's Bait and Tackle lease reassignment

- City of Fort of Fort Pierce
- Richard and Rita King
- Diego M. Larroude and Donna Qvarnstrom-Burke

6. **List and/or attach all related documents and known authorities (e.g., statute, ordinance, resolution, administrative code, legal case, RFP, bidder's response, contract, lease, letter, memorandum, prior legal opinion, deed, etc.):**

   -
   -

7. **Identify prior legal assistance on this or a related matter and the attorney who handled it:** Former City Attorney, Rob Schwerer

8. **If this is a request for review of a contract, provide the following:**

   a. **List of individuals who have read and approved the business terms and conditions of the contract and confirmed the ability to carry out the terms of the contract as they apply to the City:** City of Fort Pierce legal department.

   b. **Insurance requirements that differ from the City's template insurance terms:**

      Outlined in Little Jim's Bait and Tackle, Inc. original contract.

CITY ATTORNEY USE ONLY			
Routed for Review	**Date**	**Response Deadline**	**Response**

NOTICE OF CONSENT

TO: Nick Mimms, City Manager and Representative for City Commission
City of Fort Pierce
100 N. U.S. Highway 1
Fort Pierce, Florida 34950

TO ALL IT MAY CONCERN:

Please accept this document as formal notice of the consent and request of Little Jim's Bait and Tackle, Inc., and principals and it's guarantors, Richard A. King and Rita King for the Assignment of the Lease Agreement for Little Jim's property entered into on April 3, 2015, to Diego M. Larroude and Donna Qvarnstrom-Burke per agreement between the parties.

Dated January 15, 2019.

Little Jim's Bait and Tackle, Inc.

RICHARD KING

RITA KING

City of Fort Pierce
Florida

Office of the City Clerk
City Hall, 100 North US 1
P.O. Box 1480 Fort Pierce, FL 34954-1480
(772) 467-3052 • www.CityOfFortPierce.com

April 23, 2015

Little Jim's Bait & Tackle, Inc.
Richard A. King
6502 Santa Clara Blvd.
Fort Pierce, FL 34951

Re: Lease Extension

Dear Mr. King:

Enclosed is a fully executed Lease Extension between Little Jim Bait and Tackle, Inc. and the City of Fort Pierce which was approved at the April 20, 2015 meeting of the Fort Pierce City Commission. The lease term shall be extended for an additional ten (10) year period, commencing on March 1, 2015. I have retained an original for the official city files.

If you have any questions, please don't hesitate to contact me.

Very truly yours,

Linda W. Cox
City Clerk

cc: Nicholas Mimms, Deputy City Manager (w/o attachment)

LEASE EXTENSION

THIS LEASE EXTENSION AGREEMENT, is made and entered into this ___ day of March, 2015, by and between the **CITY OF FORT PIERCE, FLORIDA,** a municipal corporation, (**"LANDLORD"**), and **LITTLE JIM BAIT AND TACKLE, INC.** a Florida corporation organized under the laws of Florida with its principal address at601 North Causeway Drive, Fort Pierce, Florida, (**"TENANT"**).

WHEREAS, the Landlord and Tenant entered into a five (5) year Lease Agreement for the parcel generally referred to as "Little Jim Fish Camp", Fort Pierce, Florida, attached hereto as Exhibit "A", commencing on March 1, 2010; and

WHEREAS, TENANT and LANDLORD have mutually agreed to a ten (10) year lease extension as provided under said Lease.

NOW, THEREFORE, in consideration of the covenants herein contained, and the sum of Ten ($10.00) Dollars and other good and valuable consideration, the receipt and sufficiency of which is acknowledged, **LANDLORD** and **TENANT** do hereby agree as follows:

1) The Lease term shall be extended for an additional ten (10) year period, commencing on March 1, 2015.

2) Portions of Section 7 Insurance of the Lease are updated and modified as follows:

Workers' Compensation/Employer's Liability Insurance

Such insurance shall be no more restrictive than that provided by the Standard Workers' Compensation Policy, as filed for use in Florida by the National Council on Compensation Insurance, without restrictive endorsements other than the Florida Employers Liability Coverage Endorsement (NCCI Form WC 09 03), those endorsements which are required by the State of Florida, or any restrictive NCCI endorsements which, under an NCCI filing, must be attached to the policy (i.e., mandatory endorsements). The minimum amount of coverage (inclusive of any amount provided by an umbrella or excess policy) shall be:

Part One:	"Statutory"	
Part Two:	$500,000	Each Accident
	$500,000	Disease – Policy Limit
	$500,000	Disease – Each Employee

The Workers' Compensation Policy must be endorsed to waive the insurer's right to subrogate against CITY, and its members, officials, officers and employees in the manner which would result from the attachment of the NCCI Waiver Of Our Right To Recover From Others Endorsement (Advisory Form WC 00 03 13) with the City of Ft. Pierce and its officials, officers and employees scheduled thereon.

Marina Operators Insurance

Such insurance shall include coverage for marina operators' legal liability, protection and indemnity, and commercial general liability. The commercial general liability coverage shall be no more restrictive than that provided by the

most recent version of standard Commercial General Liability Form (ISO Form CG 00 01) without any restrictive endorsements. CITY and its officials, officers and employees shall be included as an "Additional Insured" on a form no more restrictive than ISO Form CG 20 11 (Additional Insured – Managers or Lessors of Premises ~~Owners, Lessees, or Contractors~~). The minimum limits (inclusive of amounts provided by an umbrella or excess policy) shall be:

$500,000	Marina Operators Legal Liability
$500,000	Protection and Indemnity
$500,000	General Aggregate
$500,000	Products/Completed Operations Aggregate
$500,000	Personal and Advertising Injury
$500,000	Each Occurrence

3) All other terms and conditions of the Lease shall remain the same.

IN WITNESS WHEREOF, the parties hereto have caused this Lease Extension to be executed by their appropriate officials, as of the date first above written.

CITY OF FORT PIERCE, a municipal corporation, **LANDLORD**

Attest:

Linda W. Cox
Linda Cox, City Clerk

By: Linda Hudson
Linda Hudson, Mayor

Approved as to Form and Correctness:

Robert V. Schwerer, Esq.
City Attorney

LITTLE JIM BAIT & TACKLE, INC., a Florida Corporation, **TENANT**

By: R A K
Richard A. King, President

STATE OF FLORIDA
COUNTY OF ST. LUCIE

I HEREBY CERTIFY that on this day before me, an officer duly authorized in the State and County aforesaid to take acknowledgments, personally appeared, **Richard A. King, as President of LITTLE JIM BAIT & TACKLE, INC.** to me known to be the person described in and who executed foregoing document and who has produced dewees license as identification and who did take an oath.

WITNESS my hand and official seal in the County and State last aforesaid this 3rd day of ~~March,~~ April 2015.

Linda W. Cox
Notary Public, State of Florida at Large
My Commission expires:_____

LINDA WRIGHT COX
NOTARY PUBLIC
STATE OF FLORIDA
Comm# FF052403
Expires 9/9/2017



LEASE AGREEMENT FOR LITTLE JIM PROPERTY

THIS LEASE AGREEMENT is entered into this 25TH day of MAY, 2010, having an effective date of March 1, 2010, by and between the **CITY OF FORT PIERCE,** a municipal corporation within the territorial limits of St. Lucie County, Florida (hereinafter "LANDLORD") whose address is 100 North U.S. 1, Fort Pierce, Florida 34950; and **LITTLE JIM BAIT & TACKLE, INC.,** a Florida corporation (hereinafter "TENANT"), whose business address is 601 North Causeway Drive, Fort Pierce, Florida 34949.

WITNESSETH:

WHEREAS, the Landlord is the owner of land, building and certain improvements located on a barrier island on the southeast side along the waterway, generally known as Little Jim's located at 601 North Causeway Drive, Fort Pierce, Florida 34949 (the "Demised Premises") which is more fully depicted and described on Exhibits "A-1" and "A-2" attached hereto; and

WHEREAS, the TENANT has been selected by the City Commission of City of Fort Pierce through a competitive selection process as the operator and lessee of the Demised Premises; and

WHEREAS, the TENANT has agreed to operate and improve the Demised Premises in accordance with this Lease; and

WHEREAS, the Lease of the Demised Premises to TENANT by Landlord shall be subject to all existing zoning and building restrictions and regulations and any provisions and clauses set forth herein.

NOW, THEREFORE, for and in consideration of the mutual promises and covenants contained herein, the parties agree as follows:

1. **TERM.** The term of this Lease shall be five (5) years commencing March 1, 2010, to and including February 28, 2015 to be followed by a conditional option to renew for a ten 10 year term, provided the TENANT shall at all times remain in full compliance with all terms and conditions of this Lease and that TENANT shall have completed all required improvements. In the event TENANT shall complete the

EXHIBIT
tabbies
"A"

improvements in Schedule "A" within the first three (3) years of the original term, TENANT shall be entitled to the optional ten (10) year renewal term.

TENANT shall furnish LANDLORD with a minimum of six (6) months written notice of its intention to exercise this option prior to the expiration of the initial term. Acceptance of such option by LANDLORD shall be conditioned upon compliance as provided herein.

2. **DEMISED PREMISES.** The Demised Premises consists of an approximate eight hundred eighty (880) square foot, more or less building formerly known as LITTLE JIM FISH CAMP, together with ground level deck, and 200 linear feet of dock walkway providing approximately 470 linear feet of dockage, located at the southeast side of the DOT bridge on Alt. A1A known as Little Jim Bridge as depicted on Exhibits "A-1" and "A-2, attached hereto and incorporated herein by reference.

3. **LEASE PAYMENTS.** TENANT in consideration of this Lease, shall pay LANDLORD, without demand, at the offices of the Director of Finance, City Hall, 100 North U.S. 1, Fort Pierce, Florida 34954, or such other place as LANDLORD may from time to time designate in writing, rent in the amounts and manner set forth herein:

(a) from the commencement hereof through March 31, 2011 the sum of $1,600 due upon the 1ST day of each month;

(b) commencing April 1, 2011 ,through March 31, 2012 $1,800 per month due upon the 1ST day of each month.

(c) commencing April 1, 2012 through March 31, 2015 the sum of $2,000 per month due upon the 1ST day of each month.

(d) During the optional renewal period and commencing the first day of the first year of the optional renewal lease term, rent shall be readjusted, modifying the current term rent for the year by an amount equal to (100%) of the Annual "Unadjusted Percent Change" in the Consumer Price Index (CPI), for "United States City Average" for the previous year as published by the Bureau of Labor Statistics, for the month in which the first year of the optional lease term begins. For each change of one (1) index point in the CPI, rent shall be adjusted by a factor of 1.0%.

Any adjustments shall take effect at the end of the twelfth month of the year preceding the first day of the first month of the new lease year and will be further adjusted each twelve (12) months thereafter. Said adjustment will be based on the most recent CPI indices available immediately prior to the adjustment date.

LANDLORD shall notify TENANT of the adjusted rent due based on the preceding method of adjustment, and TENANT shall promptly pay the same. If LANDLORD shall notify TENANT of such adjusted rent subsequent to the payment of any rent for such lease year, upon the first day of the month immediately following the receipt of such notice, TENANT shall pay the amount due for the months during such lease year as to which rent without such adjustment had previously been paid. Such adjusted rent shall not, under any circumstances, result in a reduction of the previous year's rent.

The covenant of TENANT to pay rent is separate and distinct from other covenants and TENANT shall have no right of set-off or reduction in the payment of rent for any reason. Payments required hereunder shall be in United States currency or its equivalent.

4 **TAX.** In addition to rent specified herein, and other sums of money provided in and by this Lease to be paid by TENANT, TENANT shall pay in advance the full amount of all property, sales, use, excise and rental taxes levied, assessed by or payable to any governmental agency, body or taxing authority for or on account of this Lease.

TENANT shall also be responsible for and pay any ad valorem and non ad valorem taxes which are assessed upon the property leased by TENANT, assessed by the taxing authority during TENANT's usage and lease of the property.

TENANT shall pay prior to delinquency all taxes assessed and levied upon the trade fixtures, furnishings, equipment, inventory and all other personal property of TENANT contained in the leased premises or elsewhere.

5 **LATE CHARGES.** In the event any base rent payment due hereunder shall not be paid within ten (10) days after the due date, TENANT shall pay LANDLORD a late charge of five (5%) percent of such late payment.

6. **HOURS OF OPERATION.** At all times during this Lease, TENANT shall be required to operate a fish camp with related facilities and amenities including bait and tackle shop, dockage, basic boat supplies, snacks, food & beverages, including patio,

casual dining, with minimum hours of operation to vary by season, holidays and related factors seven days per week. TENANT agrees to operate no less than 8 hours per day, weather permitting. TENANT further agrees that it will offer breakfast and casual lunch and dinner during selected months. TENANT shall have the right to determine its business hours within the above perimeters and as provided herein.

TENANT further acknowledges the need for the continuous and regular operation, including the duty to exercise best management practices, and the operation of said business as provided for herein shall be a separate covenant under this Lease.

7. INSURANCE. TENANT shall, at its own expense, procure and maintain throughout the term of this Agreement, with insurers acceptable to CITY, the types and amounts of insurance conforming to the minimum requirements set forth herein.

As evidence of compliance with the insurance required herein, TENANT shall furnish CITY with:

(a) a fully completed satisfactory Certificate of Insurance evidencing all coverage required herein. Also, a copy of the actual additional insured endorsement as issued on the Commercial General Liability policy, signed by an authorized representative of the insurer(s) verifying inclusion of CITY and CITY' s members, officials, officers and employees as additional insureds in the Commercial General Liability coverage; or

(b) the original of the policy(ies); or

(c) other evidence satisfactory to CITY.

All policies should be endorsed to provide thirty (30) days written notice of cancellation to CITY for all coverages. Until such insurance is no longer required by this Contract, TENANT shall provide CITY with renewal or replacement evidence of insurance prior to the expiration or termination of such insurance at least thirty (30) days prior to the expiration or termination of such insurance.

If requested to do so by CITY, TENANT shall, within thirty (30) days after receipt of a written request from CITY, provide CITY with a certified, complete copy of the policies of insurance providing the coverage required.

<u>Workers' Compensation/Employer's Liability Insurance</u>

Such insurance shall be no more restrictive than that provided by the Standard Workers' Compensation Policy, as filed for use in Florida by the National Council on Compensation Insurance, without restrictive endorsements. The minimum amount of coverage (inclusive of any amount provided by an umbrella or excess policy) shall be:

Part One:	"Statutory"	
Part Two:	$ 500,000	Each Accident
	$ 500,000	Disease - Policy Limit
	$ 500,000	Disease - Each Employee

The Workers' Compensation Policy must be endorsed to waive the insurer's right to subrogate against CITY, and its members, officials, officers and employees in the manner which would result from the attachment of the NCCI Waiver Of Our Right To Recover From Others Endorsement (Advisory Form WC 00 03 13) with the City of Ft. Pierce and its officials, officers and employees scheduled thereon.

Marina Operators Insurance

Such insurance shall include coverage for marina operators' legal liability, protection and indemnity, and commercial general liability. The commercial general liability coverage shall be no more restrictive than that provided by the most recent version of standard Commercial General Liability Form (ISO Form CG 00 01) without any restrictive endorsements. CITY and its officials, officers and employees shall be included as an "Additional Insured" on a form no more restrictive than ISO Form CG 20 10 (Additional Insured - Owners, Lessees, or Contractors). The minimum limits (inclusive of amounts provided by an umbrella or excess policy) shall be:

$ 500,000	Marina Operators Legal Liability
$ 500,000	Protection and Indemnity
$ 500,000	General Aggregate
$ 500,000	Products/Completed Operations Aggregate
$ 500,000	Personal and Advertising Injury
$ 500,000	Each Occurrence

Liquor Liability Coverage

Such insurance shall cover liability of TENANT arising out of the sale of alcoholic beverages on the Demised Premises and in the course of their business. The minimum limits (inclusive of amounts provided by an umbrella or excess policy) shall be:

$ 500,000 General Aggregate
$ 500,000 Each Occurrence

Automobile Liability Insurance

Such insurance shall be no more restrictive than that provided by Section II (Liability Coverage) of the most recent version of standard Business Auto Policy (ISO Form CA 00 01) without any restrictive endorsements, including coverage for liability contractually assumed, and shall cover all owned, non-owned, and hired autos used in connection with the performance of the work. The minimum limits (inclusive of any amounts provided by an umbrella or excess policy) shall be:

$ 500,000 Each Occurrence - Bodily Injury and Property Damage Combined

Pollution Legal Liability Insurance

If TENANT engages in fueling operations, TENANT shall procure and maintain insurance applicable to TENANT's liability resulting from pollution or other environmental impairment arising out of, or in connection with such fueling operations including the use of any storage tanks. Such coverage shall include coverage for clean-up of pollution conditions and 3rd party bodily injury and property damage claims arising from pollution conditions.

Coverage must either be on an occurrence basis; or, if on a claims-made basis, the coverage must respond to all claims reported within three years following the period for which coverage is required and which would have been covered had the coverage been on an occurrence basis. The minimum limits (inclusive of any amounts provided by an umbrella or excess policy) shall be:

$ 500,000 per claim
$ 500,000 aggregate

The CITY and the CITY's officials, officers, agents and employees shall be included as an "Additional Insureds" on the policy.

The Maximum permissible deductible or self-insured retention on the pollution

liability policy shall be $25,000 per claim. The payment of any amount owed under any deductible or self-insured shall be the sole responsibility of TENANT and TENANT shall pay on behalf of the CITY or CITY's officials, officers, agents and employees any deductible or self-insured retention applicable to a claim against the CITY or the CITY's officials, officers, agents and employees.

Property Insurance

The CITY shall have no responsibility to maintain property insurance on any of TENANT's property. It shall be the sole responsibility of TENANT to maintain property insurance coverage on the building and improvements on the Demised Premises and all contents of such buildings. If TENANT elects to maintain such coverage on TENANT's buildings and contents, such coverage shall be paid for by TENANT. LANDLORD consents to TENANT obtaining such coverage.

In the event TENANT obtains property insurance coverage on the building and improvements, LANDLORD shall be named as an additional insured; provided, however, that should the Demised Premises be damaged by fire or other insured casualty, and the improvements on the Demised Premises are capable of being repaired or rebuilt, all insurance proceeds shall be utilized for the costs to repair and rebuild. In the event the buildings and improvements cannot be repaired or rebuilt, or in the event the costs thereof exceed the available insurance proceeds, all insurance proceeds from losses of any structures shall be paid as follows: (a) to TENANT if during the first four (4) years of this Lease; (b) to LANDLORD during the last year of the initial term,;; (c) to TENANT during the first five (5) years of the subsequent or renewal term; (d) seventy five percent (75%) to TENANT and twenty five percent (25%) to LANDLORD during years six (6) through eight (8) of the subsequent or renewal term; and (e) one-half (1/2) to TENANT and one-half (1/2) to LANDLORD during years nine (9) and ten (10) of the subsequent or renewal term.

General Conditions

The insurance provided by TENANT shall apply on a primary basis to, and shall not require any contribution from, any insurance, or self-insurance, maintained by the CITY, or its officials, officers and employees.

Except as provided herein or where prior written approval has been obtained from

CITY hereunder, no deductible or self-insured retention for any required insurance provided by TENANT pursuant to this Agreement will be allowed. To the extent there is any deductible or self-insured retention applicable to any required insurance, TENANT shall be solely responsible for paying such deductible or self-insured retention, including any amounts owed under such deductible or self-insured retention on behalf of CITY, or its officials, officers and employees.

Compliance with these insurance requirements shall not limit the liability of TENANT. Any remedy provided to the CITY by the insurance provided by the TENANT shall be in addition to and not in lieu of any other remedy (including, but not limited to, as an indemnitee of TENANT) available to the CITY under this Agreement or otherwise.

Neither approval nor failure to disapprove insurance furnished by TENANT shall relieve TENANT from responsibility to provide insurance as required by this Agreement.

8. **USE OF PREMISES.** TENANT will use and occupy the premises solely as a dockage facility with attendant amenities, including bait and tackle shop, snack bar, casual restaurant in a rustic old Florida style.

a) TENANT may seek to obtain subject to applicable regulations, licensure for retail sales of beer and wine for on-premises and off-premises consumption. TENANT represents it currently has beer and wine license including off-premises consumption. LANDLORD acknowledges TENANT may seek to obtain a license to serve a full-line of alcoholic beverages for on-premises consumption. TENANT shall provide copies of all liquor license records to LANDLORD upon request.

b) TENANT specifically agrees not to conduct its business in a manner that disturbs the quiet enjoyment of any nearby residents and agrees to conduct its business in compliance with all applicable laws.

c) TENANT further agrees to:

1) keep the premises in a clean and sanitary condition; to comply with all laws, ordinances, rules, regulations, environmental permits, and all other

obligations imposed by applicable provisions of building, housing, health, and environmental codes by any State or Federal law, regulation, or agency; and

2) to make no alterations or additions to the Demised Premises except as set forth herein, without the prior written consent of LANDLORD, and

3) to forbid overnight stays, including live-aboard persons on any docked or moored vessel; and

4) to commit no waste of the premises; to remove all garbage and other debris which results from the operation of TENANT's business in a clean and sanitary manner and to remove the garbage and debris in conformity with all laws and regulations; to keep all plumbing fixtures used by TENANT clean and sanitary and in repair, to use and operate in a reasonable manner all electrical, plumbing and other facilities; not to destroy, deface, damage, impair or remove any part of the Demised Premises or property therein belonging to LANDLORD; and

5) to direct persons on the premises with TENANT's consent to conduct themselves in a manner that does not constitute a breach of the peace; and

6) to surrender the Demised Premises at the termination of this Lease in as good state and condition reasonable use and wear permitted.

d) TENANT shall have the right, subject to approval of LANDLORD to adopt reasonable rules and regulations applicable patrons, customers and members of the public in utilization of the Demised Premises which may include one or more of the following or similar rules:

(1) Limitation of patrons, customers and members of the public, bringing food and beverages from off site for consumption on Demised Premises, that have not been purchased or acquired from TENANT, including unlicensed alcoholic beverages provided that no limitation shall prevent patrons, customers, or members of the public from consuming such food or beverages on their private vessels or watercraft or the immediate vicinity thereof.

(2) Reserving the right to refuse access to the Demised Premises to any person whose actions, threats, possession of any weapons or obvious impairment poses a threat to persons or property.

(3) Usage of Dockage Agreement approved by Landlord.

(4) Service of any food or beverages including alcoholic beverages consistent with State of Florida requirements for protection of TENANT's liquor license.

(5) Hours of operation, as approved by LANDLORD, including usage of dockage, docks and piers.

9. MAINTENANCE AND REPAIR. TENANT shall at all times maintain its facility(s), and all appurtenances thereof in a condition and appearance in keeping with the intent of the parties, in compliance with all local, state and federal statutes, codes, ordinances and rules. TENANT shall keep and maintain in good order, condition and repair (which repair shall mean replacement, if necessary) docks, piers, walkways, exterior and interior walls, roof, exterior and interior portions of all doors, windows, glass, plumbing and sewage facilities, fixtures, interior electrical equipment serving the Demised Premises, floors and ceilings, and all other parts of the Demised Premises. LANDLORD shall not be responsible to maintain or to make any improvements or repairs of any kind in or upon the Demised Premises.

It is anticipated that TENANT will need to install certain improvements and equipment at the Demised Premises which may include a second story, tiki, decking, kitchen equipment, electrical and plumbing fixtures which will become a part of the Demised Premises. See Schedule "A" attached.

If any repairs required to be made by TENANT hereunder are not commenced and proceeded with due diligence within ten (10) days after written notice delivered to TENANT by LANDLORD (or within such shorter period as LANDLORD should require in the event of an emergency, with or without notice), LANDLORD may, at its option, make such repairs without liability to TENANT for any loss of damage which may result to its stock or business by reason of such

repairs, and TENANT shall pay to LANDLORD immediately upon demand as additional rent hereunder, the costs of such repairs plus ten (10%) of the amount thereof (for LANDLORD' s service and overhead costs). At all times during the term of this Lease, TENANT shall maintain the Demised Premises and operate its facility(s) and business in a tasteful manner in accordance with the intent of the parties so as to enhance the image and appearance of the facility.

10. ALTERATIONS. Except as provided herein, TENANT shall not make any alterations, additions or improvements to the Demised Premises without the prior written consent of LANDLORD, except for the installation of unattached, movable trade fixtures which may be installed without defacing the Demised Premises. All alterations, additions, improvements and fixtures (other than movable trade fixtures) which may be made or installed upon the Demised Premises shall become the property of LANDLORD upon installation and shall remain upon and be surrendered with the Demised Premises at the termination of the Lease unless LANDLORD requests their removal, in which event TENANT shall remove the same and restore the Demised Premises to the original condition at TENANT's expense. Any linoleum, carpeting or other floor covering which may be cemented or otherwise affixed to the floor of the Demised Premises shall be a permanent fixture and shall become the property of LANDLORD without credit or compensation to TENANT. LANDLORD shall at all times retain sole control of the exterior appearance of the building and the Demised Premises, including but not limited to approval over exterior colors and color scheme for the building and all of its fixtures and appurtenances, to further include all signage.

TENANT undertakes and covenants to perform certain alterations, upgrades, improvements and additions to the Demised Premises during the term hereof which are set forth and outlined on Schedule "A" attached hereto. TENANT shall commence the improvements listed on Schedule "A" in no particular sequence within 90 days of the date hereof and shall complete all improvements listed on Schedule "A" within the initial term hereof.

11. UTILITIES. TENANT shall contract, in its own name and shall pay the

charge before delinquency, for all utility services rendered or furnished to the Demised Premises, including water, gas, electricity, telephone, garbage and the like, together with all taxes or other charges levied on such utilities.

12. **TITLE TO IMPROVEMENTS.** Title to any building, structure or other improvements (other than movable trade fixtures) that shall be constructed, installed or placed upon the Demised Premises shall vest in LANDLORD upon the termination of this Lease or any renewal of extension hereof, and TENANT acknowledges that it shall have no right to remove such fixed and permanent improvements and any fixed appliances, apparatus or equipment related to the Improvements, including all replacements, accessories and modifications thereof from the Demised Premises.

13. **DAMAGE AND OBLIGATION TO RESTORE.** TENANT shall give immediate written notice to LANDLORD of any damage caused to the Demised Premises by fire or other casualty. If the Demised Premises should be: (1) damaged by any casualty and; (2) be damaged to an extent in excess of fifty percent (50%) of the cost of replacement thereof, LANDLORD and TENANT may elect either to terminate the lease or to proceed to rebuild and repair the Demised Premises. Should LANDLORD elect to terminate the lease, it shall give written notice of such election to TENANT within ninety (90) days after the occurrence of such casualty.

In such event, TENANT shall have ninety (90) days to present a plan to rebuild the Demised Premises and provide evidence of sufficient funding, including insurance proceeds.

14. **LIABILITY AND INDEMNIFICATION.** LANDLORD shall not be liable for any damage or injury to any person or property whether it be to the person or property of TENANT, TENANT's employees, agents, guests, invitees, or otherwise, by reason of TENANT's use and occupancy of the leased premises, or due to the negligent, reckless, or intentionally wrongful acts of Tenant or because of fire, flood, wind storm, acts of God, or for any other reason, including the negligent, reckless, or intentionally wrongful acts of third persons on the premises, except such damage or injury arising or occurring as a result of LANDLORD's positive acts, negligent acts or omissions. TENANT hereby agrees to defend indemnify and save harmless LANDLORD, its officers, employees,

representatives and agents from and against any and all loss, damage, claim, demand, liability, cost or expense by reason of damage to person or property which may arise or be claimed to have arisen as a result of the occupancy or use of the Demised Premises by the TENANT, or in any way arising on account of any injury or damage caused to any person or property on or in the Demised Premises as a result of TENANT's occupancy including, but not limited to, LANDLORD's attorney's fees and costs, both at trial and appellate levels; provided TENANT shall have the right to designate and employ all counsel, including joint counsel for both LANDLORD and TENANT thereby accepting any tender of defense. This provision shall be deemed satisfied if any insurance provides a defense and is an additional named insured. If there is no insurance coverage TENANT shall provide a defense at its costs, with counsel that is reasonably acceptable to LANDLORD.

15. **EMINENT DOMAIN.** If the Demised Premises or any part thereof should be permanently taken, condemned or transferred by agreement in lieu of condemnation for any public or quasi-public use or purpose by any competent authority, whether or not the Lease shall be terminated, the entire compensation award therefore, both leasehold and reversion shall be the property of LANDLORD without any deduction therefrom for any present or future estate of TENANT, and TENANT hereby assigns to LANDLORD all its right, title and interest to any such award. TENANT shall execute all documents required to evidence such result. TENANT shall, however, be entitled to claim, prove and receive in such condemnation proceedings, such award as may be allowed for fixtures and other equipment installed by it, but only if or to the extent such award shall be in addition to the award for the land and the building and other improvements (or portions thereof) containing the Demised Premises.

If the entire Demised Premises should be taken, condemned, or transferred as aforesaid, the Lease shall terminate as of the time possession thereof is required for public sale. If a portion of the Demised Premises should be taken, condemned or transferred as aforesaid, LANDLORD may elect to terminate the Lease, or at its own expense, to repair and restore the portion not affected by the said taking, in which latter event the minimum rent shall be reduced in proportion to the area taken, effective at the time possession is required for public use.

16. **ASSIGNMENT AND SUBLETTING.** The identity and financial standing of TENANT is a material consideration of LANDLORD in entering into

the Lease. TENANT shall not voluntarily, involuntarily, or by operation of law, assign, sell, mortgage, pledge, or in any manner transfer the lease or any estate or interest therein or sublet the Demised Premises or any part thereof, or grant any license, concession, or other right to occupy any portion of the Demised Premises without the prior written consent of LANDLORD, which consent LANDLORD may not unreasonably withhold. For purposes of this provision, the sale, transfer, or assignment by any shareholder of TENANT of its shares, or the sale of shares by TENANT to any individual, firm, or entity which results in the transfer of more than forty (40%) percent of the stock of such corporation, or causes the existing shareholders to be less than a majority of the control of the corporation, shall also be considered a transfer of this Lease which shall require LANDLORD's prior written consent. Although TENANT may have the right to mortgage its interest in this Lease, all rights acquired under the leasehold mortgage shall be subject to all of the terms of this Lease. There shall be no subordination of this Lease and the LANDLORD shall otherwise be protected in any financing arrangement. TENANT agrees that any leasehold mortgage it may execute in obtaining financing for the construction and development of the proposed facilities shall contain language incorporating the foregoing provision. Consent by LANDLORD to one or more assignments or subletting shall not operate as a waiver of LANDLORD's rights as to any subsequent assignments and subletting. Notwithstanding any assignment or subletting, TENANT and any guarantor of TENANT's obligations under the Lease shall at all times remain fully responsible and liable for compliance with all of the obligations of TENANT, including the payment of rent.

In the event of the transfer and assignment by LANDLORD of its interest in the Lease and in the building(s) and structures comprising the Demised Premises, LANDLORD shall thereby be released from any further obligations and TENANT agrees to look solely to such successor in interest for performance of such obligations. Such transfer and assignment, however, shall not affect the validity of this Lease, and TENANT shall continue in possession of the premises subject to all terms and conditions provided in the Lease.

17. **DEFAULT AND REMEDIES.** The occurrence of any one or more of the following events shall constitute a material default and breach of the Lease by TENANT:

a. The vacating or abandonment of the Demised Premises by

TENANT, with intent to so abandon and not the result of a casualty.

b. The failure by TENANT to make payment of rent or any other payment required to be made by TENANT hereunder, as and when due, where such failure shall continue for a period of three (3) days after written notice thereof from LANDLORD to TENANT.

c. The failure by TENANT to observe or perform any of the covenants, conditions or provisions to be observed or performed by TENANT, other than described in Paragraphs a and b above, where such failure shall continue for a period of ten (10) days after written notice thereof from LANDLORD to TENANT; provided, however, that if the nature of TENANT's default is such that more than ten (10) days are reasonably required for its cure, TENANT shall not be deemed in default if TENANT commences such cure within said ten (10) day period and thereafter diligently pursues such cure to completion.

d. If TENANT or any guarantor should commence, in any court pursuant to any statute either of the United States or of any state, an insolvency or bankruptcy proceeding (including, without limitation, a proceeding for liquidation, reorganization or for adjustment of debts of an individual with regular income), or if such a proceeding is commenced against TENANT or any said guarantor and either an order of relief is entered against such party or such party fails to secure a discharge of the proceeding within thirty (30) days of the filing thereof, or if TENANT or any said guarantor becomes insolvent or is unable or admits in writing its inability to pay its debts as they become due, or makes an assignment of both benefit of creditors or petitions for or enters into an arrangement with its creditors or a custodian is appointed or takes possession of TENANT's or any said guarantor's property whether or not a judicial proceeding is instituted in connection with such arrangement or in connection with the appointment of such custodian.

e. The discovery by LANDLORD that any financial statement given to LANDLORD by TENANT, any assignee of TENANT, any subtenant of TENANT, any successor in interest of TENANT, or any guarantor of TENANT's obligations, and any of them, is materially false.

18. **REMEDIES UPON DEFAULT.** In the event of any default or

breach by TENANT, LANDLORD may at any time thereafter, without notice or demand and without limiting LANDLORD in the exercise of any right or remedy which LANDLORD may have by reason of such default or breach:

(a) Declare the entire rent for the balance of the Lease term, or any part thereof, due and payable forthwith, and bring an action for the recovery thereof, subject to LANDLORD's obligation to mitigate damages.

(b) Terminate TENANT's right to possession of the Demised Premises by any lawful means and retake possession thereof for the account of LANDLORD, in which event TENANT shall immediately surrender possession of the Demised Premises to LANDLORD and all further liability under the Lease on the part of the TENANT and LANDLORD shall terminate.

(c) Pursue any other remedy now or hereafter available to LANDLORD under the laws and judicial decisions of the State of Florida. In the event of a proceeding involving TENANT under the Bankruptcy Code, 11 U.S.C. §101 et seq., if the Lease is assumed by TENANT's trustee in bankruptcy (after he has cured all existing defaults, compensated LANDLORD for any loss resulting therefrom and provided adequate assurance of future performance), then the Lease may not be assigned by the trustee to a third party, unless such party (1) executes and delivers to LANDLORD an agreement in recordable form whereby such party assumes and agrees with LANDLORD to discharge all obligations of TENANT under the Lease, (2) has a net worth and operating experience at least comparable to that possessed by TENANT and any guarantor hereof as of the time of execution of the Lease, and (3) grants to LANDLORD, to secure the performance of such party's obligations under the lease, a security interest in such party's merchandise, inventory, personal property, fixtures, furnishings, and accounts receivable (and in the proceeds of all of the foregoing) with respect to its operations in the Demised Premises, and in connection thereof, such party shall execute such security agreements, financing statements and other documents (the forms of which are to be prepared by

LANDLORD) as are necessary to perfect such lien.

If the LANDLORD should exercise any of its remedies hereunder, TENANT shall be liable for and shall pay to LANDLORD the costs of removing and storing TENANT's or other occupant's property; the costs of repairing, altering, remodeling or otherwise putting Demised Premises into condition acceptable to a new tenant or tenants; real estate commissions actually paid; that portion of the leasing commission paid by LANDLORD applicable to the unexpired term of the Lease, if applicable, and all reasonable expenses incurred by LANDLORD, including attorney's fees.

If the Lease should be terminated, or the Lease term should expire, LANDLORD shall have the immediate right thereafter to re-enter the Demised Premises and to remove all persons and property therefrom. Such property may be stored in a public warehouse or elsewhere at the cost of and for the account of TENANT. In such event, LANDLORD shall not be deemed guilty of trespass or become liable for any loss or damage which may be occasioned thereby.

The rights and remedies granted herein to LANDLORD are distinct, separate and cumulative remedies, and the exercise of any of them shall not be deemed to exclude LANDLORD's right to exercise any or all of the others. All charges payable by TENANT under the terms of the Lease shall be deemed rent for the purpose of LANDLORD exercising its remedies.

No waiver of any covenant or condition or of the breach of any covenant or condition of the Lease shall be taken to constitute a waiver of any subsequent breach of such covenant or condition nor to justify or authorize the nonobservance of any other occasion of the same or of any other covenant or condition hereof, nor shall the acceptance of rent by LANDLORD at any time when TENANT is in default under any covenant or condition hereof by construed as a waiver of such default or of LANDLORD's right to terminate the Lease on account of such default, nor shall any waiver or indulgence granted by LANDLORD to TENANT be taken as an estoppel against LANDLORD, it being expressly understood that if any time TENANT should be in default in any of its covenants or conditions hereunder, an acceptance by LANDLORD of rent during the continuance of such default or the failure on the part of LANDLORD promptly to avail itself of

such other rights or remedies as LANDLORD may have shall not be construed as a waiver of such default, but LANDLORD may at any time thereafter, if such default continues, terminate the Lease on account of such default.

LANDLORD shall not be in default unless LANDLORD fails to perform obligations required of LANDLORD within a reasonable time, but in no event later than fifteen (15) days after written notice by TENANT to LANDLORD, specifying wherein LANDLORD has failed to perform such obligations provided, however, that if the nature of LANDLORD's obligation is such that more than fifteen (15) days are required for performance, LANDLORD shall not be in default if LANDLORD commences performance within such fifteen (15) day period and thereafter diligently prosecutes the same to completion.

TENANT hereby acknowledges that late payment by TENANT to LANDLORD of rent and other sums due hereunder will cause LANDLORD to incur costs not contemplated by the Lease, the exact amount of which will be extremely difficult to ascertain. Such costs include, but are not limited to, processing and accounting charges. Accordingly, if any installment of rent or any other sum due from TENANT shall not be received by LANDLORD or LANDLORD's designee within ten (10) days after such amount shall be due, TENANT shall pay to LANDLORD a late charge equal to five (5%) percent of such overdue amount. The parties hereby agree that such late charge represents a fair and reasonable estimate of costs LANDLORD will incur by reason of the late payment of TENANT.

19. **LANDLORD SECURITY.** To secure the payment of all rent and other sums of money due and to become due and the faithful performance of the Lease by TENANT, TENANT hereby grants to LANDLORD an express first and prior lien and security interest on all property (including fixtures, equipment, chattels and merchandise) which may be placed in the Demised Premises, and also upon all proceeds of any insurance which may accrue to the TENANT by reason of destruction of or damage to any such property. Such property shall not

be removed therefrom without written consent of LANDLORD until all arrearages in rent and other sums of money then due to LANDLORD hereunder shall first have been paid. This lien and security interest is given in addition to the LANDLORD's statutory lien and shall be cumulative thereto. Consequently with the execution of the Lease (or later if requested by LANDLORD at its discretion), TENANT shall execute and deliver to LANDLORD Uniform Commercial Code Financing Statements in sufficient form so that when properly filed, the security interest hereby given shall be perfected. The lien and security interest created hereby shall be terminated when all of the rent and other sums of money becoming due during the Lease term shall have been paid in full.

20. **SUBORDINATION AND ATTORNMENT.** The Lease, at LANDLORD's option, shall be subordinate to any ground lease, mortgage or any other hypothecation for security now or hereafter placed upon the real property of which the Demised Premises are a part and to any and all advances made on the security thereof and to all renewals, modifications, consolidations, replacements and extensions thereof. If any mortgagee or ground lessor should elect to have the Lease prior to the lien of its mortgagee or ground lease, and should give written notice thereof to TENANT, the Lease shall be deemed prior to such mortgage or ground lease, whether the lease is dated prior or subsequent to the date of said mortgage or ground lease.

TENANT agrees to execute any documents required to effectuate such subordination or to make the Lease prior to the lien of any mortgage or ground lease, as the case may be, and failing to do so within ten (10) days after written demand, does hereby make, constitute and irrevocably appoint LANDLORD as TENANT's attorney in fact and in TENANT's name, place and stead, to do so.

Upon request of LANDLORD, TENANT shall, in the event any proceedings are brought for the foreclosure of, or in the event of exercise of the power of sale under any mortgage made by LANDLORD covering the Demised Premises, attorn to the purchaser upon any such foreclosure of sale and recognize such purchaser as LANDLORD under the Lease.

21. **TENANT ESTOPPEL CERTIFICATE.** TENANT shall at any time upon not less than ten (10) days prior written notice from LANDLORD execute, acknowledge and deliver to LANDLORD a statement in writing: (1) certifying that the Lease is unmodified and in full force and effect (or, if modified, stating the nature of such modification and certifying that the Lease, as so modified is in full force and effect) and the date to which the rent and other charges are paid in advance, if any; (2) acknowledging that there are not, to TENANT's knowledge, any uncured defaults on the part of LANDLORD, or specifying such defaults if any are claimed; and (3) otherwise be in a form reasonably acceptable to LANDLORD. Any such statements may be conclusively relied upon by any prospective purchaser or existing or prospective encumbrancer of the Demised Premises.

If LANDLORD desires to finance, refinance, or sell the Demised Premises, or any part thereof, TENANT hereby agrees to deliver to any lender or purchaser designed by LANDLORD such financial statements of TENANT as may be reasonably required by such lender or purchaser. All such financial statements shall be received by LANDLORD and such lender or purchaser in confidence and shall be used only for the purposes herein set forth.

22. **NOTICES.** All notices required to be served upon LANDLORD shall be served by registered or certified mail, return receipt requested, to: CITY OF FORT PIERCE, Attention: City Manager, P.O. Box 1480, Fort Pierce, Florida 34954, with a copy to the Office of the City Attorney, P.O. Box 1480, Fort Pierce, Florida 34954, or such other place as LANDLORD may designate in writing. All notices required to be served upon TENANT shall be served by hand delivery or registered or certified mail, return receipt requested to: LITTLE JIM'S BAIT & TACKLE, INC., Richard A. King, 6502 Santa Clara Boulevard, Fort Pierce, Florida 34951, with a copy to ROBERT J. GORMAN, ESQ., 1209 Delaware Avenue, Ft. Pierce, FL 34950, or such other place as TENANT may designate in writing. All such notices shall be deemed to have been duly given, delivered, or served if and when hand delivered or deposited in the U.S. Post Office, postage prepaid, whether evidence of delivery received is obtained or not obtained.

23. **ACCESS TO PROPERTY.** During the term of this Lease, and any

renewal or extension thereof, TENANT shall permit LANDLORD and the agents and representatives of LANDLORD access to the leased property and licensed area at all reasonable times deemed necessary for the purpose of this Lease, including inspection of all work being performed in connection with the construction of improvements thereon, the management and operation of the facilities and to assure compliance with all ordinances, statutes and rules and regulations of federal, state and local agencies having jurisdiction.

24. **GENERAL PROVISIONS.** The following general provisions shall be an integral part of this Lease:

a. TENANT shall not record the Lease without LANDLORD's prior written consent, and any such recordation shall, at the option of LANDLORD, constitute a non-curable default of TENANT.

b. Nothing herein contained shall be deemed or construed by the parties hereto, nor by any third party, as creating a relationship of principal and agent or of partnership or of joint venture between the parties hereof. Neither the method of computation of rent, nor any other provisions contained herein, nor any acts of the parties hereto, shall be deemed to create any relationship between the parties hereto other than the relationship of LANDLORD and TENANT.

c. The invalidity of any provision of the Lease as determined by a court of competent jurisdiction shall in no way affect the validity of any other provisions hereof.

d. Time is of the essence.

e. The captions used herein are for convenience only and do not limit or amplify the provisions hereof.

f. Whenever a period of time is prescribed for action to be taken by LANDLORD, LANDLORD shall not be liable or responsible for and there shall be excluded from the computation of any such period of time, any delays due to strikes, riots, acts of God, shortages of labor or materials, war, governmental laws, regulations or restrictions or any other causes of any kind whatsoever which are beyond the reasonable control of LANDLORD.

g. Upon TENANT paying the rent reserved hereunder and observing and performing all the covenants, conditions and provisions on TENANT's part to be observed and performed hereunder, TENANT shall have quiet possession of the Demised Premises, for the entire Lease term, subject to all the provisions of the Lease.

h. Each provision performable by TENANT shall be deemed both a covenant and a condition. The Lease contains all agreements of the parties with respect to any matter mentioned herein. No prior agreement or understanding pertaining to any such matter shall be effective. The Lease may be modified in writing only, signed by the parties in interest at the time of modification.

i. Subject to the provisions hereof restricting assignment or subletting by TENANT and regarding LANDLORD's liability, this Lease shall bind the parties, their personal representatives, successors and assigns. The Lease shall be governed by the laws of the State of Florida.

j. The terms "LANDLORD" and "TENANT", as used herein, denote both singular and plural and all genders. Where "TENANT" consists of more than one person, whether natural or artificial, all the persons constituting "TENANT" shall be jointly and severally liable for all obligations to be performed by TENANT herein.

k. The Effective Date of the Lease shall be March 1, 2010.

l. All terms, covenants, and conditions herein contained, to be performed by TENANT, shall be performed at its sole cost and expense, and if LANDLORD shall pay any sum of money or do any act which requires the payment of money, by reason of the failure neglect or refusal of TENANT to perform such term, covenant, or condition, the sum of money so paid by LANDLORD shall be deemed additional rent and shall be payable to TENANT with the next succeeding installment of rent together with such interest as may have accrued thereon.

m. Any amount due to LANDLORD not paid when due shall bear interest at the maximum rate allowable by law accruing from the due date.

n. Notwithstanding anything to the contrary provided in the Lease, it is specifically understood and agreed by LANDLORD and TENANT that there shall be absolutely no personal liability on the part of LANDLORD, or its

shall be absolutely no personal liability on the part of LANDLORD, or its successors, or any partners or corporate shareholders of LANDLORD, or its successors, with respect to any of the terms, conditions and covenants of the Lease, and that TENANT shall look solely to the interest of LANDLORD in the premises for the satisfaction of each and every remedy of TENANT in the event of any breach by LANDLORD of any terms, conditions and covenants of the Lease to be observed or performed by LANDLORD.

25. **JOINT VENTURE.** It is specifically understood and agreed that nothing in this Lease shall be construed as creating a joint venture, partnership or other relationship between the parties to the agreement other than LANDLORD and TENANT.

26. **ATTORNEY'S FEES AND COSTS.** The prevailing party shall be entitled to an award of all costs, charges, and expenses, including the fees of counsel, agents and others retained by such party and incurred in enforcing either party's obligations hereunder or in any litigation or appellate proceedings.

27. **PAYMENT.** No payment by TENANT or receipt of payment by LANDLORD of an amount less than the full amount then due LANDLORD under this Lease shall be construed as anything other than a partial payment of the sum then due and owing. No endorsement or statement on any check or letter or any form of payment or accompanying documents shall be deemed to be an accord and satisfaction or other form of settlement, and LANDLORD may accept any such payment without prejudice to its rights to recover the balance of any sums due and owing under this Lease or to pursue any other remedy permitted under this Lease or Florida law.

28. **RADON GAS.** Pursuant to Fla. Stat. §404.046(8), Radon is a naturally occurring radioactive gas that when it has accumulated in a building in sufficient quantities, may present health risks to persons who are exposed to it over time. Levels of radon that exceed federal and state guidelines have been found in buildings in Florida. Additional information regarding radon and radon testing may be obtained from the St. Lucie County Public Health Unit.

29. **INSPECTION.** LANDLORD or its agents shall have the right to enter the

any other purpose not inconsistent with the terms and provisions of this Lease.

30. **PARTIAL INVALIDITY.** In the event any term, provision, or condition of this Lease shall be adjudged, decreed, held, or ruled to be invalid, such provision or a portion thereof shall be deemed severable, and it shall not invalidate or impair this Lease as a whole or any other provision of this Lease.

31. **TIME.** Time is of the essence of this Lease and every term and provision of this Lease.

32. **LEASE NOT RECORDABLE.** Neither this Lease nor any notice of memorandum thereof, except such instrument as maybe required by LANDLORD from TENANT shall be recorded in any public records.

33. **ENTIRE AGREEMENT.** This Lease contains the entire and sole agreement between the parties hereto relative to the rental of the leased premises and it may be modified only by an agreement in writing executed by LANDLORD and TENANT with the same formalities as this LEASE. No surrender of the leased premises or of the remainder of the term of this Lease shall be valid unless accepted by LANDLORD in writing. This agreement shall be interpreted and enforced under the laws of the State of Florida. It is agreed and understood that this agreement has been negotiated and drafted jointly and is not to be construed against any party.

IN WITNESS WHEREOF, the parties hereto have signed, sealed, and delivered this Lease as of the day and year first above written.

WITNESS AS TO LANDLORD
ATTEST:

Cassandra Steele, City Clerk

LANDLORD
CITY OF FORT PIERCE
By:

Robert J. Benton, III, Mayor

Date: May 25 2010

APPROVE AS TO FORM
AND CORRECTNESS

By:
Robert V. Schwerer, Esq.
City Attorney

City Attorney

WITNESSES AS TO TENANT

Timothy M. McGuire
Print name

Kimberly Thompson
Kimberly Thompson
Print name

TENANT:
LITTLE JIM BAIT & TACKLE, INC.

By: _____
Richard A. King, President

Date: 5-3-10

WITNESSES AS TO GUARANTOR:

Timothy M. McGuire
Print name

Kimberly Thompson
Kimberly Thompson
Print name

GUARANTOR:

RICHARD A. KING and RITA KING

_____
Richard A. King

Rita K King
Rita A. King

GUARANTEE

THE UNDERSIGNED, as Guarantor, guarantees all of the obligations of the TENANT under that certain Lease dated the day of March, 2010, between **CITY OF FORT PIERCE, FLORIDA**, a Florida municipal corporation, as LANDLORD, and, **LITTLE JIM BAIT AND TACKLE, INC.**, a Florida Corporation, as TENANT, for the Demised Premises identified therein and located at 601 North Causeway Drive, Fort Pierce, FL 34949, adjacent to the City Marina of the City of Fort Pierce, Florida.

The undersigned, jointly and severally, further confirm and acknowledge the following:

1. The liability of the undersigned is absolute and unconditional irrespective of (i) any lack of validity or enforceability of the Lease; (ii) the existence of any property given as security for, or other guarantee of the Lease; or (iii) any other circumstance which might otherwise constitute a defense available to, or a discharge of, the TENANT in respect of the Lease or the undersigned in respect of this Guarantee.

2. The undersigned has a monetary interest (direct or indirect) in TENANT, and/or in the conduct of the business to the Demised Premises.

3. The undersigned has executed this Guarantee to induce LANDLORD to lease the Demised Premises to TENANT.

4. With regard to obligations of TENANT to pay money, this Guarantee imposes on the undersigned a guarantee of payment and not of collection.

5. LANDLORD has the right to take action against one or more of the undersigned guarantors, if more than one, without affecting the obligations of any other of the undersigned guarantors not being proceeded against.

WITNESS our hands and seals this day of March, 2010.

WITNESSES:

Print name

Print name

GUARANTOR:
RICHARD A. KING and RITA KING

Richard A. King

5-3-10
Rita King

Date:

EXHIBIT "A-1"

The Demised Premises is legally described as:

35 34 40 FROM NW COR OF SEC RUN S 89 DEG 49 MIN 01 SEC E 1556.56 FT, TH S 00 DEG 10 MIN 59 SEC W 1908.70 FT TO POB, TH N 58 DEG 59 MIN 38 SEC E 166.32 FT, THS 75 DEG 40 MIN 00 SEC E 200 FT, TH S 54 DEG 07 MIN 50 SEC W 159.37 FT TO HIGH WATER/VEG MARK, TH MEANDERING SD HW MARK SWLY 218.96 FT MIL, TH N 35 DEG 54 MIN 18 SEC W 72.65 FT, TH N 32 DEG 50 MIN 14 SEC E 76.58 FT TO POB

as generally depicted on the aerial, Exhibit "A-2"

SCHEDULE "A"

TENANT agrees to remove existing concrete boat ramp, which is in disrepair, and improve access area to same with additional parking subject to the City's Land Development Regulations.

TENANT agrees to remove all sunken vessels from the leased portion of the demised property and construct additional pitched-roof decking with outdoor seating to the southwest subject to the City's Land Development Regulations.

TENANT agrees to install new fuel pumping and storage facilities with at least gasoline stations subject to all Federal, State and Local codes and regulations.

TENANT agrees to construct at least five (5) additional boat slips on the leased portion of the demised property subject to all Federal, State and Local codes and regulations.

tabbies

EXHIBIT "A-2"

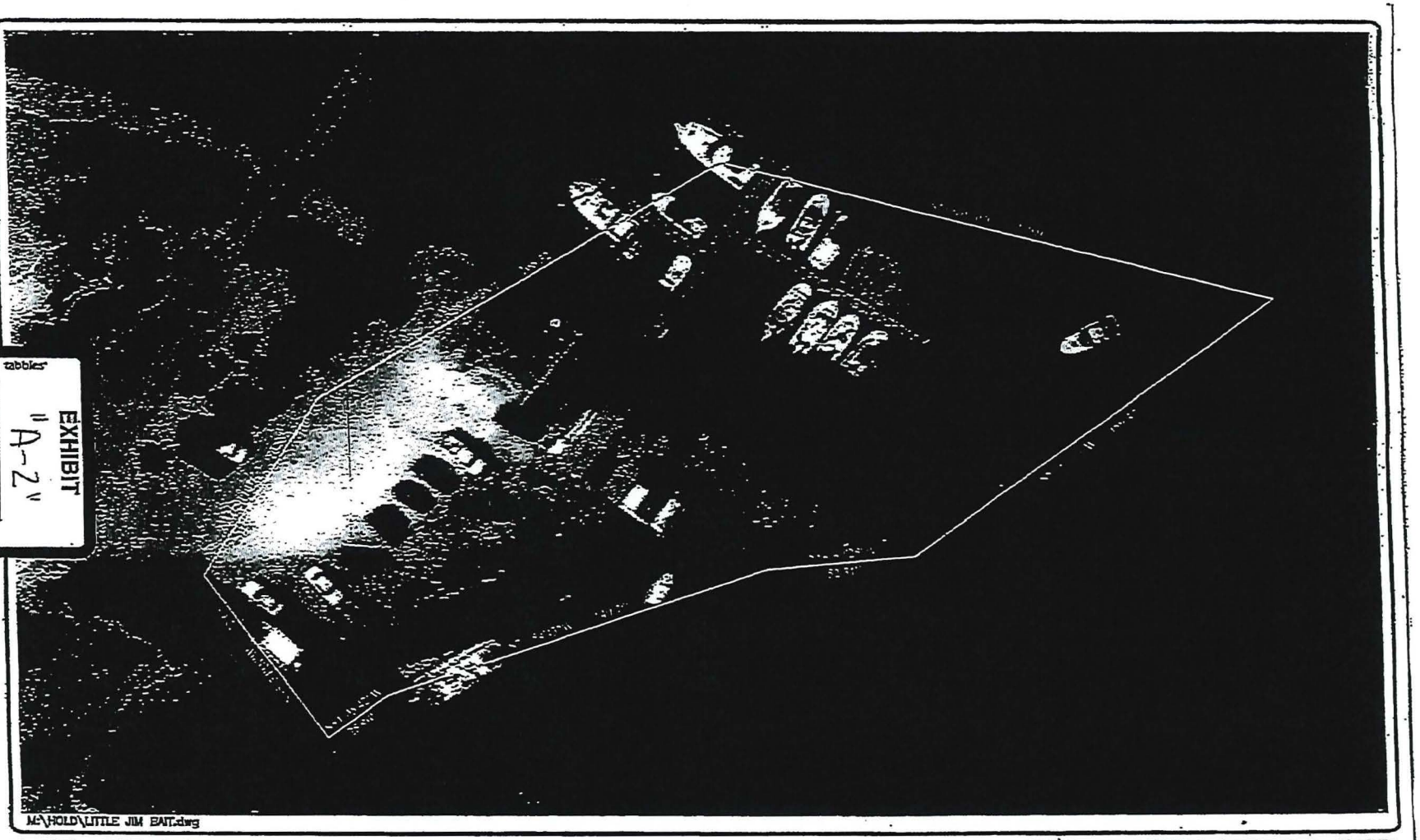

M:\HOLD\LITTLE JIM BAIT.dwg

CITY OF FORT PIERCE
DEPARTMENT OF ENGINEERING

A PARCEL OF LAND TO BE LEASED
TO LITTLE JIM BAIT & TACKLE SHOP

DATE: 6-9-00
SCALE: 1" = 20'
DRWG: 1

No.	DATE	BY	REVISIONS

SHEET 1 OF 1

RECEIVED
TIME
MAR 2 4 2015
CITY OF FT. PIERCE
CITY MANAGER'S OFFICE

CITY OF FORT PIERCE - OFFICE OF THE CITY ATTORNEY

MEMORANDUM

TO: Nicholas Mimms, Deputy City Manager

FROM: Robert V. Schwerer, City Attorney

SUBJECT: Little Jim Bait and Tackle – Lease Extension

DATE: March 24, 2015

Attached please find the Lease Extension for the Little Jim Bait and Tackle lease, approved as to form and correctness. You may have this scheduled as a consent agenda item on the next City Commission agenda.

Please note that the Lease provided for a conditional ten (10) year lease extension. In an effort to update all of the City's leases of its properties, our insurance consultant is recommending some minor changes to the insurance provisions of our leases of City property. These updates have been incorporated in the attached.

Please let me know if you have any questions.

Robert V. Schwerer, Esq.
City Attorney

/mlp
Attachment
cc: Robert J. Bradshaw, City Manager (***via email***)
Linda Cox, City Clerk (***via email***)

City Commission Regular Meeting **11.b.**

Meeting Date: 02/19/2019

Re: Application for Installation of Above-Ground Storage Tank at 3711 Crossroads Parkway

Submitted For: Paul Thomas, Building Official, Building

SUBJECT:

Approval of the installation of one (1) UL-2085 rated 20,000 gallon diesel fuel above-ground tank, to be located at 3711 Crossroads Parkway.

SUMMARY:

Two (2) existing 12,000 gallon, above-ground storage tanks will be removed and replaced with one (1) UL-2085 rated 20,000 gallon diesel fuel above-ground tank at 3711 Crossroads Parkway.

RECOMMENDATION:

Staff recommends approval for the request for installation of one (1) UL-2085 rated 20,000 gallon diesel fuel above ground tank, to be located at 3711 Crossroads Parkway.

ALTERNATIVES:

Do not approve the request for tank installation at this time.

RESPONSIBLE STAFF:

Paul Thomas, CBO, CFM, Building Official

COORDINATED WITH:

Shaun Coss, Building Department Coordinator

Fiscal Impact

OTHER INFORMATION:

Building Department will obtain permit fee of $1,875.

Attachments

Ryder Diesel Tank Plans

18-3638 Tank Permit Application

Form Review

Inbox	Reviewed By	Date
Building	Paul Thomas	02/01/2019 11:14 AM
City Manager	Nick Mimms	02/12/2019 11:18 AM
Form Started By: Karen Murphy		Started On: 01/30/2019 10:47 AM

Final Approval Date: 02/12/2019

RYDER SYSTEM, INC
11690 NW 105 STREET
MIAMI, FLORIDA 33178
PHONE: (305) 500-5076

RYDER LC0173

3711 CROSSROADS PARKWAY
FORT PIERCE, FLORIDA 34945

OWNERS INTENDED USES:
TO CONSTRUCT OFFICES AND A FACILITY FOR THE RENTING, LEASING, MAINTENANCE, FUELING, SALES, WASHING AND PARKING OF VEHICLES.

PROJECT VARIABLES:

HEATING DEGREE DAYS: _____

SURVEYOR'S NAME: _____

SURVEYOR'S TELEPHONE NO.: _____

AUTHOR OF GEOTECHNICAL REPORT: _____

AUTHOR'S TELEPHONE NO.: _____

CIVIL ENGINEER: _____

ENGINEER'S TELEPHONE NO.: _____

FUEL: ☐ 20,000 GALLON GLASS FIBER REINFORCED RESIN UST W/ TURBINE
☐ 15,000 GALLON GLASS FIBER REINFORCED RESIN UST W/ TURBINE
☐ 12,000 GALLON GLASS FIBER REINFORCED RESIN UST W/ TURBINE
☒ 20,000 GALLON DOUBLE WALL STEEL AST UL-2085

OWS: ☐ 1000 GALLON ☐ 550 GALLON DOUBLE WALL STEEL AST
☐ 2000 GALLON DOUBLE WALL STEEL AST

BULK OIL: ☐ 2000 GALLON ☐ 1000 GALLON DOUBLE WALL STEEL AST
☐ 2500 GALLON GLASS FIBER REINFORCED RESIN UST

USED OIL: ☐ 1000 GALLON ☐ 500 GALLON DOUBLE WALL STEEL AST
☐ 600 GALLON GLASS FIBER REINFORCED RESIN UST W/ TURBINE

FOR OTHER SELECTED OPTIONS, SEE CHECKED BOXES AT FAR RIGHT.

SCOPE OF WORK NOTES:

1. PERFORM ALL WORK IN ACCORDANCE WITH FEDERAL, STATE, AND LOCAL CODES (INCLUDING – BUT NOT LIMITED TO – FIRE RESISTANCE RATED CONSTRUCTION & OPENING ASSEMBLIES, ACCESSIBILITY COMPLIANCE, SMOKE DETECTION & THE LIKE) AS WELL AS WITH OWNER-FURNISHED CRITERIA, PLANS, AND SPECIFICATIONS; IF THERE IS A CONFLICT AMONG VARIOUS BID REFERENCES, PLANS, SPECIFICATIONS OR CODES, THE STRICTEST STANDARDS SHALL APPLY AND BE INCLUDED IN THE BID.
2. DESIGN/BUILD CONTRACTOR SHALL CONSTRUCT A NEW FACILITY AS INDICATED ON CRITERIA DRAWINGS, COMPLETE AND OPERATIONAL. COORDINATE FULLY WITH OTHER CONTRACTORS AT THE SITE.
3. SUCCESSFUL BIDDER SHALL UNDERTAKE TO PERFORM THE WORK ON A DESIGN/BUILD BASIS, AND IS RESPONSIBLE FOR ALL ENGINEERING, ARCHITECTURAL DESIGN, CONSTRUCTION DRAWINGS, PERMITS, AND TESTING.
4. REVIEW ATTACHED BOUNDARY AND TOPOGRAPHICAL SURVEY.
5. DESIGN/BUILD CONTRACTOR SHALL VISIT THE SITE PRIOR TO SUBMITTING A PROPOSAL AND CHECK THE AREA OF WORK AND VERIFY LOCATIONS OF UTILITIES AND POINTS OF OF CONNECTION AND INCLUDE IN THE BID ALL REQUIRED, OFF-SITE INSTALLATIONS.
6. FOR PAVING DESIGN (AND BUILDING FOUNDATIONS), REVIEW GEOTECHNICAL REPORT.
7. DESIGN/BUILD CONTRACTOR SHALL COMPLY WITH ALL STORM WATER PERMIT REQUIREMENTS REGULATING CONSTRUCTION SITE RUN OFF, AND EROSION AND SEDIMENT RUN OFF AND CONTROL AND SHALL INCLUDE IN HIS BASE BID ALL REQUIREMENTS FOR STORM WATER MANAGEMENT AND CONTROL, THAT IS, STRUCTURES, PIPES, HEADWALLS AND THE LIKE, AS INDICATED ON CIVIL/SITE DRAWINGS.
8. BIDS SHALL INCLUDE PAVING PER CIVIL/SITE DRAWINGS
9. NO METERS (THAT IS, WATER, GAS OR ELECTRICAL) OR TRANSFORMERS SHALL BE LOCATED ABOVEGROUND IN FRONT OF THE BUILDING.
10. THE WATER SERVICE PIPING SHALL BE EQUIPPED WITH A BACK FLOW PREVENTOR AND METER AS REQUIRED BY LOCAL CODES. PROVIDE FROST PROTECTION PER LOCAL CODE.
11. SIZE WATER SERVICE TO BUILDING TO PROVIDE MINIMUM OF 50 TO 70 PSI AT 50 GPM FOR WASH BAY EQUIPMENT. THE EXPOSED MAIN INTERNAL WATER SUPPLY LINE IN THE MAIN SHOP AREA IS TO BE INSULATED. INSULATE BOTH DOMESTIC HOT WATER LINES AND STEAM LINES FROM WASH BAY HEATERS TO SERVICE BAY DROPS.
12. METAL BUILDING EAVE HEIGHT TO BE MINIMUM OF 20 FEET. MAINTAIN 19'-0" CLEARANCE IN WORK BAYS TO OVERHEAD OBSTRUCTIONS (FOR EXAMPLE, PIPING CONDUITS – NOTE: LIGHT FIXTURES AND METAL BUILDING FRAMES ALONG COLUMN LINES MAY EXTEND LOWER).
13. OVERHEAD DOORS (14' WIDE x 16' HIGH) SHALL BE HIGH LIFT TYPE WITH A MINIMUM CLEARANCE OF 18'-0" FROM FINISH FLOOR. PROVIDE INSULATED OVERHEAD DOORS WITH ELECTRIC OPERATOR & PHOTOELECTRIC SAFETY SENSORS FOR SERVICE BAYS AND WASH BAY IN THE BASE BID.
14. INSTALL ALL OWNER-FURNISHED EQUIPMENT LISTED IN THE ACCOMPANYING FACILITY EQUIPMENT CHECKLIST LIST.
15. DESIGN/BUILD CONTRACTOR SHALL INSTALL ALL OWNER-FURNISHED TANKS & EQUIPMENT IN ACCORDANCE WITH MANUFACTURER'S RECOMMENDATIONS, PLANS, AND SPECIFICATIONS. PROVIDE ALL APPURTENANCES REQUIRED BY CODE AND NOT PROVIDED BY OWNER FOR A COMPLETE OPERATIONAL SYSTEM.
16. THE DESIGN/BUILD CONTRACTOR INSTALLING TANKS MUST BE CERTIFIED BY TANK MANUFACTURER, PIPING MANUFACTURER AND LOCAL JURISDICTIONS (IF REQUIRED) AS TRAINED TO INSTALL MANUFACTURER'S TANK AND PIPING.
17. FIRE PROTECTION INCLUDE IN BASE BID. CODE REQUIREMENTS FOR BUILDING FIRE PROTECTION MAY INCLUDE SPRINKLERS, SITE HYDRANT, EXTINGUISHERS, SMOKE ALARMS, FIRE ALARMS, FIRE WALLS, FIRE DOORS, EXIT LIGHTING, AND SIGNAGE.
18. ELECTRIC: MINIMUM ELECTRICAL SERVICE TO BE AS INDICATED ON ELECTRICAL DRAWINGS. DESIGN/BUILD CONTRACTOR SHALL VERIFY ACTUAL ELECTRICAL LOADS AND PROVIDE ADJUSTED SERVICE AS REQUIRED. WORK TO BE PERFORMED IN ACCORDANCE WITH NATIONAL ELECTRICAL CODE AND COMPLY WITH ALL STATE AND LOCAL CODES.
19. DESIGN/BUILD CONTRACTOR SHALL INSTALL ELECTRICAL RACEWAYS INCLUDING SENSOR JUNCTION BOXES, AS WELL AS OTHER JUNCTION BOXES AS REQUIRED, FOR A OWNER-FURNISHED AUTOMATIC TANK GAUGING (ATG), LEAK DETECTION AND MONITORING SYSTEM.
20. PRIOR TO RECEIVING APPROVAL OF FINAL PROGRESS PAYMENT, PUNCH LIST WORK MUST BE COMPLETED AND VERIFIED BY OWNER'S FACILITY PERSONNEL OR PROJECT ENGINEER, AND DESIGN/BUILD CONTRACTOR SHALL PROVIDE TWO SETS OF THE FOLLOWING ITEMS TO OWNER'S PROJECT ENGINEER:
    - TRAINING DOCUMENTATION FOR INSTALLED EQUIPMENT.
    - EQUIPMENT INSTALLATION, OPERATION, AND MAINTENANCE MANUALS.
    - COPY OF BUILDING PERMIT(S).
    - COPY OF CERTIFICATE OF OCCUPANCY AND DOCUMENTATION FROM ALL AHJ'S SHOWING ALL PERMITS HAVE BEEN CLOSED OUT.
    - WARRANTEE LETTER FROM DESIGN/BUILD CONTRACTOR TO OWNER INDICATING WORK IS GUARANTEED FOR A PERIOD OF TWO YEARS FROM THE DATE OF ACCEPTANCE.
    - ANY CITY, STATE, FEDERAL AGENCY DOCUMENTATION INDICATING THAT INSPECTIONS HAVE BEEN MADE AND WRITTEN APPROVALS HAVE BEEN GRANTED.
    - ACCEPTED AIR BALANCING REPORT FROM INDEPENDENT AIR BALANCE COMPANY –TEST RESULTS (COMPACTION, PAVING, FLOOR SLABS, AND THE LIKE)
    - COMPLETED TANK MANUFACTURER'S INSTALLATION CHECK LIST.
    - STATE REGISTRATION FORMS FOR REGULATED STORAGE TANKS.
    - COPY OF PIPING SYSTEMS INSTALLATION CHECKLIST FOR UNDERGROUND PETROLEUM PIPE.
    - A CERTIFICATE THAT HYDROSTATIC TEST WERE PERFORMED PER MANUFACTURER'S INSTRUCTIONS ON THE TURBINE ENCLOSURE, SPILL BUCKETS AND DISPENSER BOXES, AND ALL PENETRATIONS, SEAMS, & JOINTS ARE WATER TIGHT.
    - RECORD DRAWINGS ON C/D IN AutoCAD FORMAT RELEASE 14 OR HIGHER.
    - REPRODUCIBLE RECORD DRAWINGS (PROVIDE A THIRD SET TO LOCATION OF INSTALLATION)
    - THE FOLLOWING IS MINIMUM TESTING REQUIRED ALL TEST RESULTS MUST BE PROVIDED TO THE OWNER AS PART OF THE CLOSE OUT: PRIMARY & SECONDARY PIPING, GROUNDING RODS, SHEAR VALVES, OVERFILL ALARM, PRIMARY & SECONDARY TANKS AND E-STOP.
21. REVIEW WRITTEN SCOPE OF WORK BY RYDER ENGINEER.

COORDINATION NOTES

WORK BY OTHERS

- ALL SIGNAGE WILL BE BY OTHERS, EXCEPT FOR POWER FEEDS.
- FURNITURE WILL BE SUPPLIED AND INSTALLED BY OTHERS.

BUILDING CODES

- BUILDING CODE:
  2017 FLORIDA BUILDING CODE – 6TH ADDITION
- MECHANICAL CODE:
  2017 FLORIDA MECHANICAL CODE – 6TH ADDITION
- PLUMBING CODE:
  2017 FLORIDA PLUMBING CODE – 6TH ADDITION
- ELECTRICAL CODE:
  2014 NATIONAL ELECTRICAL CODE – 6TH ADDITION
- FIRE CODE:
  2017 FLORIDA FIRE CODE – 6TH ADDITION
- NFPA 30 FLAMMABLE AND COMBUSTIBLE LIQUIDS CODE – 2015 EDITION
- NFPA 30A CODE FOR MOTOR FUEL DISPENSING FACILITIES AND REPAIR GARAGES – 2015 EDITION
- NFPA 1 UNIFORM FIRE CODE HANDBOOK

DRAWING INDEX

☒G-1	TITLE SHEET: PROJECT VARIABLES, SCOPE OF WORK & DRAWING INDEX	
☐G-2 THRU G-4	SPECIFICATIONS	
☐ALTA	ALTA/ACSM SURVEY BY OTHERS	
☒SP-1	PARTIAL SITE PLAN DRAWINGS	
☒CS-1	PROTOTYPE SITE – GRAPHIC CHECKLIST & CIVIL SITE DETAILS	
☒AF-1	☐1 LANE ☒2 LANE ☐3 LANE	FUEL ISLAND ARCHITECTURAL PLAN, SECTION, & ELEVATION
☐QB-1	BUILDING EQUIPMENT PLAN(S)	
☐QB-2 & 3	BUILDING EQUIPMENT DETAILS	
☐QB-4 & 4.1	UNDERGROUND BULK LUBE AND USED OIL STORAGE TANK DETAILS	
☒QF-1	☒FUEL ISLAND EQUIPMENT PLAN – AST ☐FUEL ISLAND EQUIPMENT PLAN – UST	
☒QF-2	☒FUEL AST PLAN & DETAILS ☐FUEL UST PLAN & DETAILS	
☐QF-3	FUEL TANK SUMP & EQPT DETAILS – UST	
☒QF-4	FUEL TANK EQUIPMENT DETAILS	
☒QF-5	DEF TANK AND DISPENSERS DETAILS	
☐QL-1	LUBE PIT DETAILS AND SECTIONS	
☐FB-1	BUILDING FIRE PROTECTION PLAN(S)	
☐PB-1	☐BUILDING PLUMBING GROUND & MEZZANINE LEVEL PLANS ☐BUILDING PLUMBING FIRST FLOOR PLAN	
☐PB-1a	☐BUILDING PLUMBING GROUND & MEZZANINE LEVEL PLANS (ALTERNATE) ☐BUILDING PLUMBING SECOND FLOOR PLAN	
☐OWS	☐2000 GALLON OIL/WATER SEPARATOR ☐1000 GALLON OIL/WATER SEPARATOR ☐550 GALLON OIL/WATER SEPARATOR	
☐WASH	☐10015 PRESSURE WASHER ONLY ☐4MSV RINSE ARCH ☐DT2B DRIVE-THRU ☐MR-3500 COLD WATER GANTRY ☐GT3B HOT WATER GANTRY	BY NIAGARA; FOR REFERENCE TO STRUCT'L LOADS & INSTALLATION NOTES ONLY
☐MB-1	☐BUILDING MECHANICAL (HVAC) GROUND & MEZZANINE LEVEL PLANS ☐BUILDING MECHANICAL (HVAC) FIRST FLOOR PLAN	
☐MB-1a	☐BUILDING MECHANICAL (HVAC) GROUND & MEZZANINE LEVEL PLANS (ALTERNATE) ☐BUILDING MECHANICAL (HVAC) SECOND FLOOR PLAN	
☐EB-1	☐BUILDING ELECTRICAL GROUND AND MEZZANINE LEVEL PLANS ☐BUILDING ELECTRICAL FIRST FLOOR PLAN	
☐EB-1a	☐BUILDING ELECTRICAL GROUND AND MEZZANINE LEVEL PLANS (ALTERNATE) ☐BUILDING ELECTRICAL SECOND FLOOR PLAN	
☐EB-2	BUILDING ELECTRICAL DETAILS AND FIXTURE SCHEDULE	
☐ES-1	SITE LIGHTING AND COMMUNICATION PLAN AND DETAILS	
☒EF-1	☒FUEL ISLAND ELECT'L PLANS & DET'LS (AST) ☐FUEL ISLAND ELECT'L PLANS & DET'LS (UST)	
☒EF-2	☒FUEL ISLAND ELECT'L PLANS & DET'LS (AST) ☐FUEL ISLAND ELECT'L PLANS & DET'LS (UST)	
☒ATG-1	☒AUTOMATIC TANK GAUGING SYSTEM (W/AST) ☐AUTOMATIC TANK GAUGING SYSTEM (W/UST)	
☒ATG-2	☒AUTOMATIC TANK GAUGING SYSTEM (W/AST) ☐AUTOMATIC TANK GAUGING SYSTEM (W/UST)	

Rev. #	Date	Description

Ryder LC 0173
2 BAY REMODEL FUEL SERVICE ISLAND
3711 CROSSROADS PARKWAY
FORT PIERCE, FLORIDA 34945

TITLE SHEET

CORE STATES GROUP
1700 Industrial Drive, Suite B
Rogers, AR 72756
Phone: (479) 936-4400
Fax: (479) 936-4800

Job#:	RYD-25401		
Scale:	AS shown		
Date:	10-10-18		
Drawn By:	BMZ	Checked By:	WLJ

Documents prepared by Core States Group are to be used only for the specific project and specific use for which they are intended, and shall not be used to other projects, by owner or any other party, without the express written permission of Core States Group is done at the user's own risk. If used in a way other than that specified, Core States Group makes no warranties and the user agrees to hold Core States Group harmless from all claims and losses.

DAVID M. LEIFER LICENSE No 68170 STATE OF FLORIDA PROFESSIONAL ENGINEER
OCT 10 2018

G-1

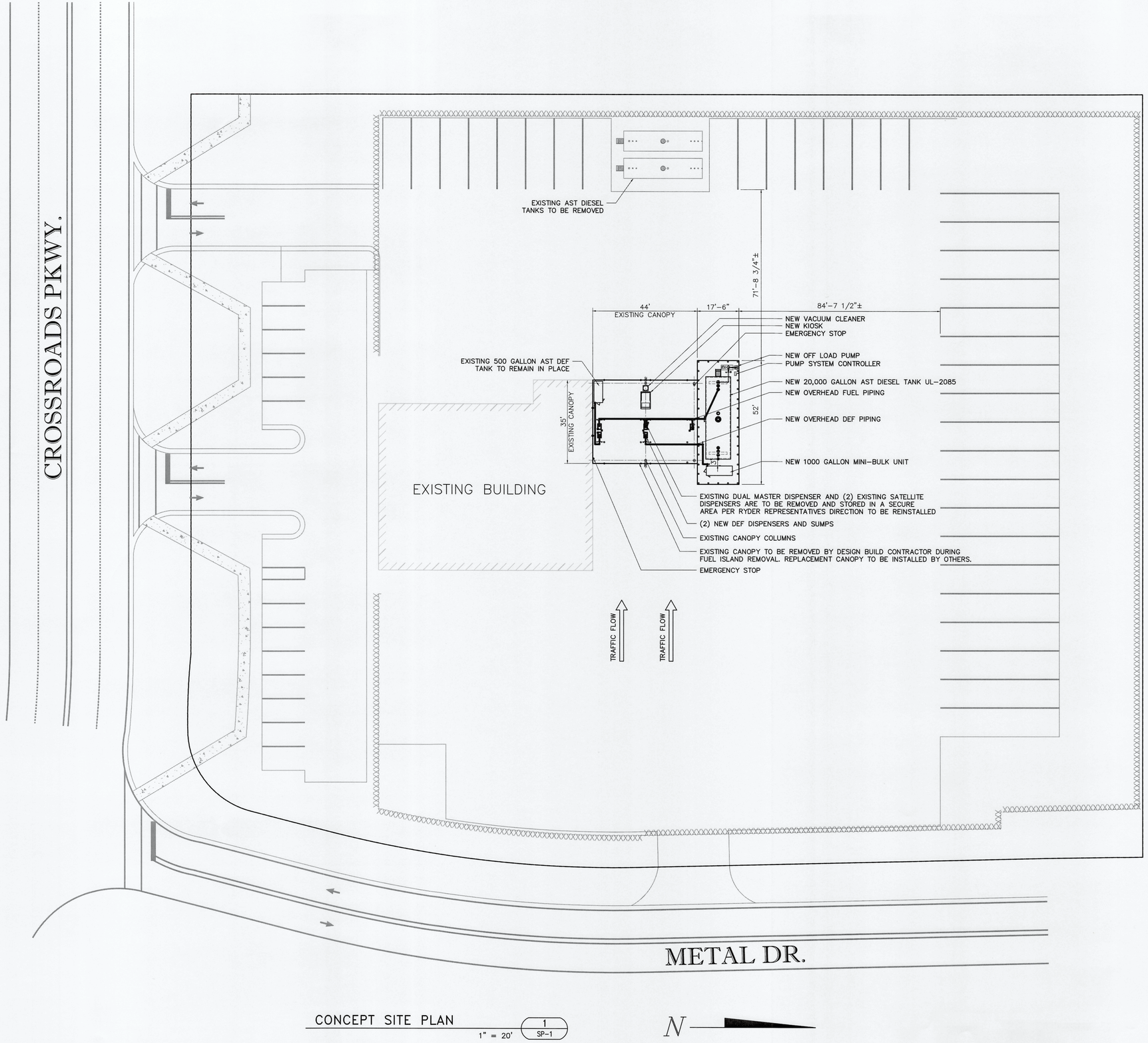

CONCEPT SITE PLAN

1" = 20'

1 / SP-1

N

Rev. #	Date	Description

Ryder LC 0173
2 BAY REMODEL FUEL SERVICE ISLAND
3711 CROSSROADS PARKWAY
FORT PIERCE, FLORIDA 34945

SITE PLAN

Ryder®

CORE STATES GROUP
1700 Industrial Drive, Suite B
Rogers, AR 72756
Phone (479) 986-4400
FAX (866) 593-8803

Job#:	RYD-25401
Scale:	AS shown
Date:	10-10-18
Drawn By:	WLJ
Checked By:	CMJ

Documents prepared by Core States Group are to be used only for the specific project and specific use for which they are intended. Any extension of use to other projects, by owner or any other party, without the expressed, written consent of Core States Group is done at the user's own risk. If used in a way other than that specifically intended, user will hold Core States Group harmless from all claims and losses.

DAVID M. LEIFFER
LICENSE
No 68170
STATE OF FLORIDA
PROFESSIONAL ENGINEER
OCT 16 2018

SP-1

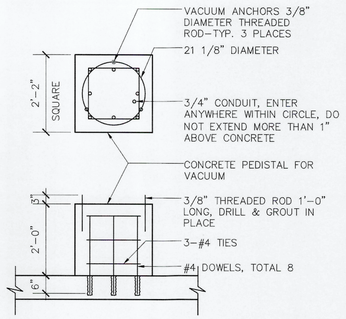

VACUUM PEDESTAL DETAIL 6 CS–1

1/2" = 1'–0"

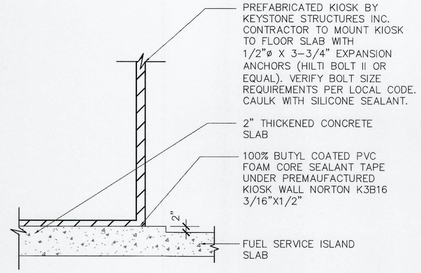

SECTION KIOSK SLAB 5 CS–1

1/2" = 1'–0"

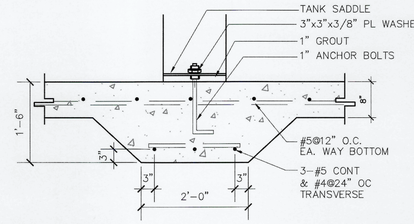

TANK SLAB AT TANK SADDLE 4 CS–1

3/4" = 1'–0"

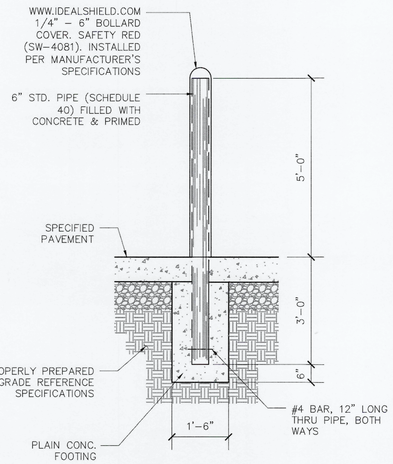

SECTION THRU TYPICAL BOLLARD 3 CS–1

SCALE: 1/2" = 1'–0"

1. USE READY–MIX CONCRETE WITH 4000 PSI STRENGTH AT 28 DAYS
2. TOOL ALL EXPOSED EDGES AND JOINT TO 1/4" RADIUS.

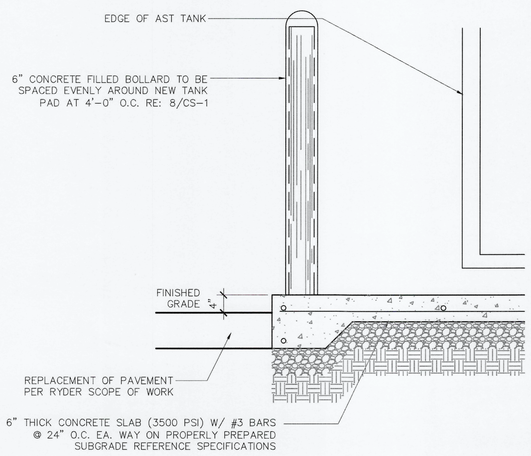

NEW AST TANK SLAB EDGE 2 CS–1

SCALE: 3/4" = 1'–0"

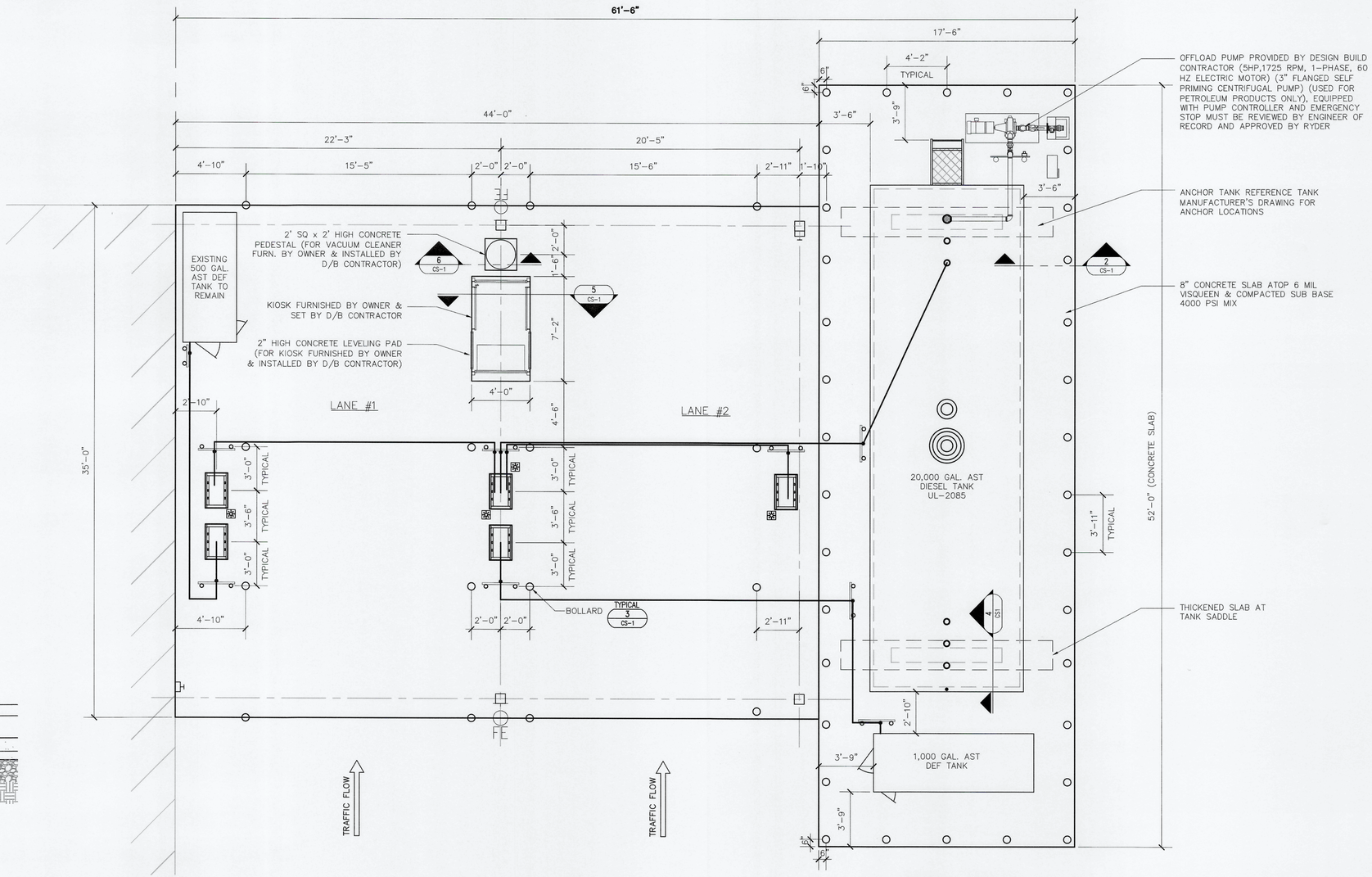

FUEL SERVICE ISLAND PAVING PLAN 1 CS–1.1

1/4" = 1'–0"

Rev. #	Date	Description

Ryder LC 0173

2 BAY REMODEL FUEL SERVICE ISLAND

3711 CROSSROADS PARKWAY
FORT PIERCE, FLORIDA 34945

1 LANE FUEL ISLAND PAVING PLAN AND DETAILS - AST

Ryder®

CORE STATES GROUP
1700 Industrial Drive, Suite B
Rogers, AR 72756
Phone (479) 986-4400
FAX (866) 910-8803

Job#:	RYD-25401
Scale:	AS shown
Date:	10-10-18
Drawn By:	BMZ
Checked By:	WLJ

Documents prepared by Core States Group are to be used only for the specific project and services for which they are intended. Any extension of use to other projects, by owner or any other party, without the express written consent of the Core States Group is done at the user's own risk. If used in a way not intended by Core States Group, the user will hold Core States Group harmless from all claims and losses.

DAVID M. LEIFER LICENSE No 68170 STATE OF FLORIDA PROFESSIONAL ENGINEER

10-10-18

CS-1

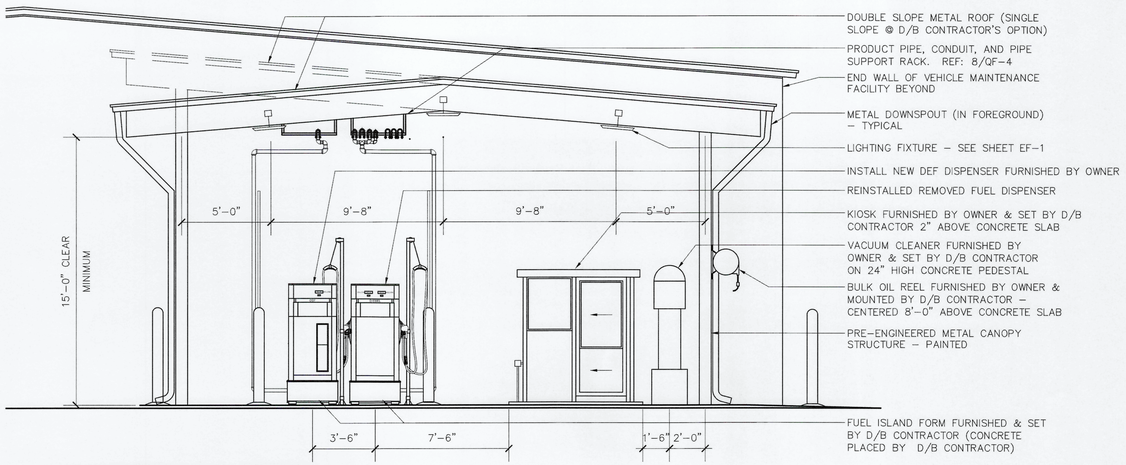

ARCHITECTURAL SECTION THRU FUEL ISLAND

SCALE: 1/4" = 1'–0" (2 / AF-1)

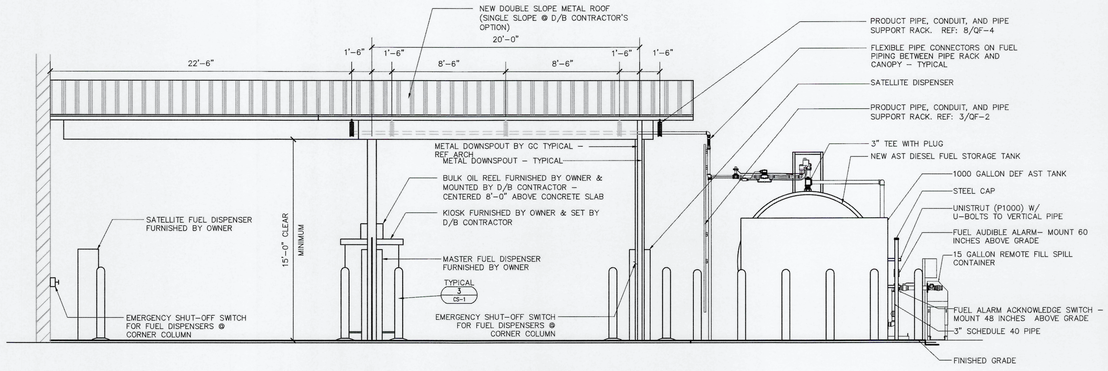

ARCHITECTURAL ELEVATION OF ENTRY SIDE OF FUEL ISLAND

SCALE: 1/4" = 1'–0" (3 / AF-1)

FOR DETAILS REFER TO FUEL ISLAND EQUIPMENT DRAWINGS (QF SERIES) & ELECTRICAL FUEL DRAWINGS (EF SERIES)

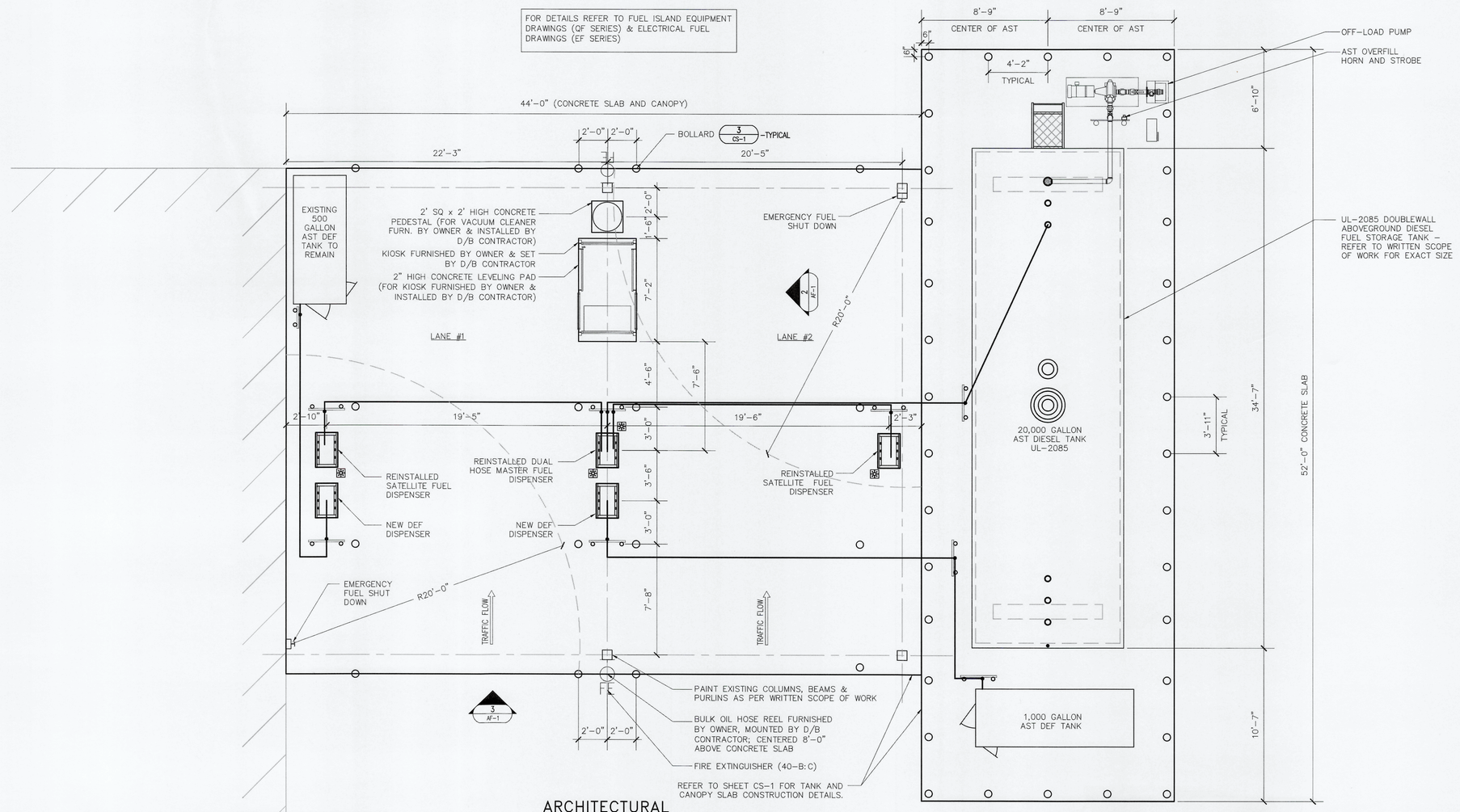

ARCHITECTURAL FUEL ISLAND PLAN

SCALE: 1/4" = 1'–0" (1 / AF-1)

Rev. #	Date	Description

Ryder LC 0173
2 BAY REMODEL FUEL SERVICE ISLAND
3711 CROSSROADS PARKWAY
FORT PIERCE, FLORIDA 34945

1 LANE FUEL ISLAND ARCHITECTURAL
PLAN, SECTIONS, & ELEVATIONS

Ryder®

CORE STATES GROUP
1700 Industrial Drive, Suite B
New Ulm, MN 56073
Phone (479) 966-4400
FAX (866) 593-9803

Job#:	RYD-25401
Scale:	AS shown
Date:	10-10-18
Drawn By:	BMZ
Checked By:	WLJ

Documents prepared by Core States Group are to be used only for the intended project and specific use for which they are intended. Any extension of use to other projects, by owner or any other party, without the expressed, written consent of Core States Group, is prohibited. If used in a way other than that specifically intended, user will hold Core States Group harmless from all claims and losses.

DAVID M. LEIFER LICENSE No 58170 STATE OF FLORIDA PROFESSIONAL ENGINEER
OCT 16 2018

AF-1

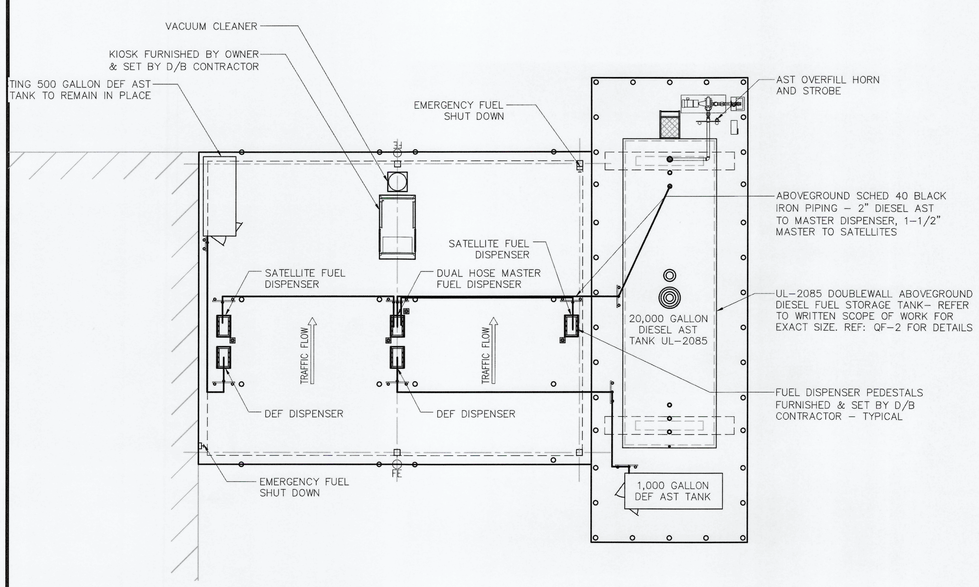

MECHANICAL PLAN OF SERVICE ISLANDS

PIPING SHOWN IS SCHEMATIC ONLY

SCALE: 1/8" = 1'–0"

1 / QF–1

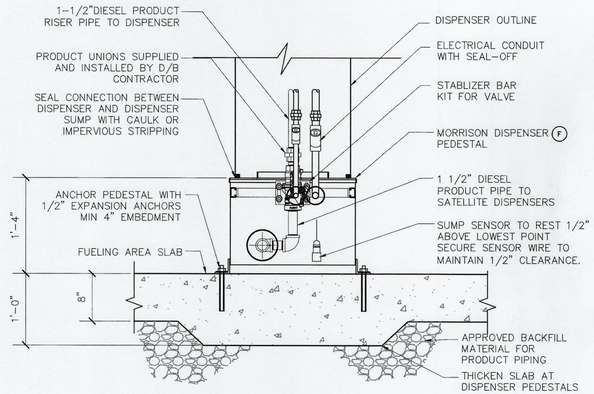

SECTION AT SATELLITE SUMP

1" = 1'–0"

2 / QF–1

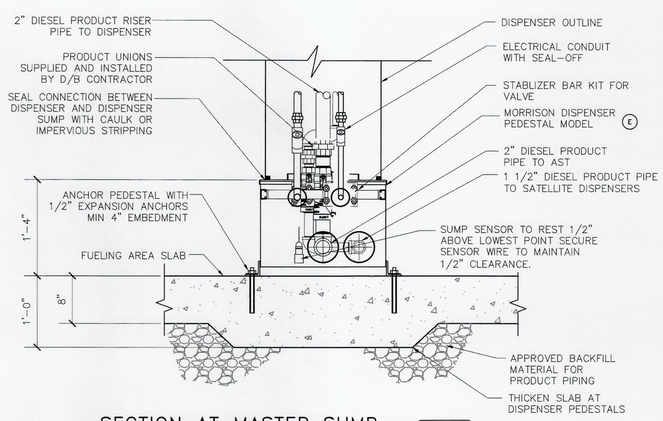

SECTION AT MASTER SUMP

1" = 1'–0"

3 / QF–1

BILL OF MATERIALS

(APPLIES TO DRAWING QF–1 ONLY)

ITEM	DESCRIPTION
(A)	1 1/2" DIA. OPW 10BF–5725 SINGLE POPPET, OPW10BFP–5726 DOUBLE POPPET, AND 2" DIA OPW 10BPF–2002 DOUBLE POPPET IMPACT VALVE, MOUNT SHEAR SECTION LEVEL WITH TOP SIDE OF CONCRETE DISPENSER ISLAND
(B)	2" SCHEDULE 40 BLACK IRON STEEL PRODUCT PIPING
(C)	MORRISON BRO. ENTRY BOOT FITTING 2" MODEL #434CB–0200 1B, 1 1/2" MODEL #434CB–0150 1B, 1" MODEL #434CB–0100 AND 3/4" MODEL #434CB–0075 1B
(D)	1 1/2" SCHEDULE 40 BLACK IRON STEEL PRODUCT PIPING
(E)	MORRISON BRO. STAINLESS STEEL DISPENSER PEDESTAL MODEL #434S–14003AK
(F)	MORRISON BRO. STAINLESS STEEL DISPENSER PEDESTAL MODEL #434S–14001AK (TYP. 2 EACH)
(X)	LETTERS INDICATE ITEMS FURNISHED AND INSTALLED BY THE D/B CONTRACTOR

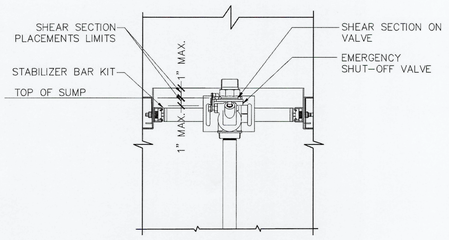

SECTION AT SHEAR VALVE

SCALE: 1 1/2" = 1'–0"

6 / QF–1

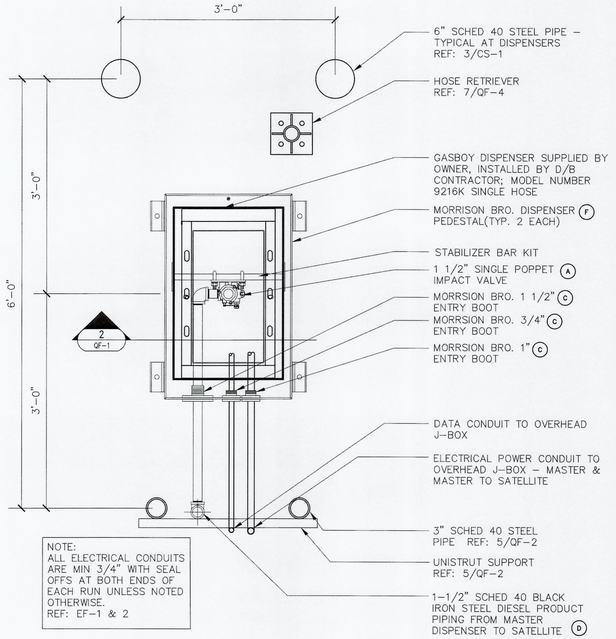

SATELLITE ISLAND PLAN

NA

4 / QF–1

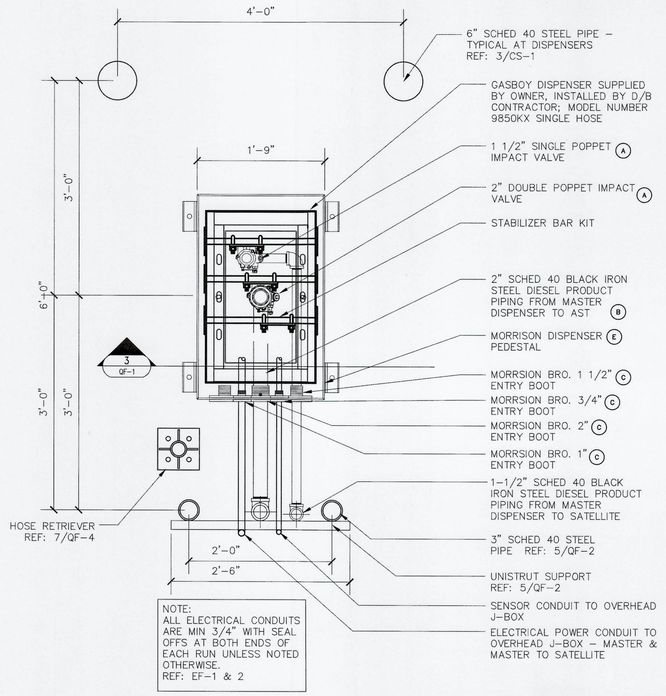

MASTER ISLAND PLAN

NA

5 / QF–1

NOTES:

METER DISPLAY TOTALIZER SHALL FACE THE REMOTE FUEL DISPENSER SATELLITE SERVED BY THE METER.

D/B CONTRACTOR TO PROVIDE EQUIVALENT RAIN TIGHT DISPENSER SUMP MODEL, IF SPECIFIED EQUIPMENT IS NOT AVAILABLE.

FLEXIBLE CONNECTORS SHALL BE RATED 100 P.S.I. (MINIMUM), U.L. APPROVED.

INSTALLER SHALL REFERENCE TO GILBARCO/GASBOY/ATLAS INSTALLATION/OPERATION MANUAL FOR INSTALLATION PROCEDURES.

INSTALLATION CONTRACTOR SHALL INSTALL ONE (1) OWNER FURNISHED 2 HP, VARIABLE SPEED, SINGLE PHASE, 208/230 VOLT, F.E. PETRO PUMP.

INSTALLATION CONTRACTOR SHALL PROVIDE OWNER WITH A CERTIFICATE THAT HYDROSTATIC TEST WERE PERFORMED, PER MANUFACTURER'S INSTRUCTIONS, ON THE TURBINE ENCLOSURE, SPILL BUCKETS, AND DISPENSER BOXES, AND THAT ALL PENETRATIONS, SEAMS, & JOINTS ARE WATER TIGHT.

ALL TANKS, AND DISPENSERS SHOWN ON THIS DETAIL SHALL BE FURNISHED BY OWNER AND INSTALLED BY THE D/B CONTRACTOR.

ALL AIR, LUBRICATION, BULK OIL, USED OIL, ANTI–FREEZE, PRODUCT AND CONTAINMENT PIPING SYSTEMS SHALL BE FURNISHED AND INSTALLED BY THE D/B CONTRACTOR.

THE WORK BY D/B CONTRACTOR SHALL INCLUDE THE FUEL ISLAND RENOVATIONS, SUPPORTING STRUCTURE, SITE GRADING, CONCRETE PAVING, ALL ELECTRICAL CONDUIT AND CONDUCTORS, AND PULL STRINGS AS REQUIRED FOR INSTRUMENTATION.

ALL EQUIPMENT – SPECIFIED AS SIMILAR OR APPROVED EQUAL

Rev. #	Date	Description

Ryder LC 0173
2 BAY REMODEL FUEL SERVICE ISLAND
3711 CROSSROADS PARKWAY
FORT PIERCE, FLORIDA 34945

FUEL ISLAND EQUIPMENT PLAN-AST
TWO LANE

Ryder®

CORE STATES GROUP
1700 Industrial Drive, Suite B
Rogers, AR 72756
Phone (479) 936-6400
FAX (479) 936-6464

Job#:	RYD-25401	Drawn By:	BMZ
Scale:	AS shown	Checked By:	WLJ
Date:	10-10-18		

Documents prepared by Core States Group are to be used only for the specific project and specific use for which they are prepared and published and are not to other projects, by owner or any other party, without the expressed written consent of Core States Group is done at the user's own risk. If used in a way not intended by Core States Group, the user shall indemnify and hold Core States Group harmless from all claims and losses.

DAVID M. LEIFER LICENSE No 68170 STATE OF FLORIDA PROFESSIONAL ENGINEER
OCT 16 2018

QF–1

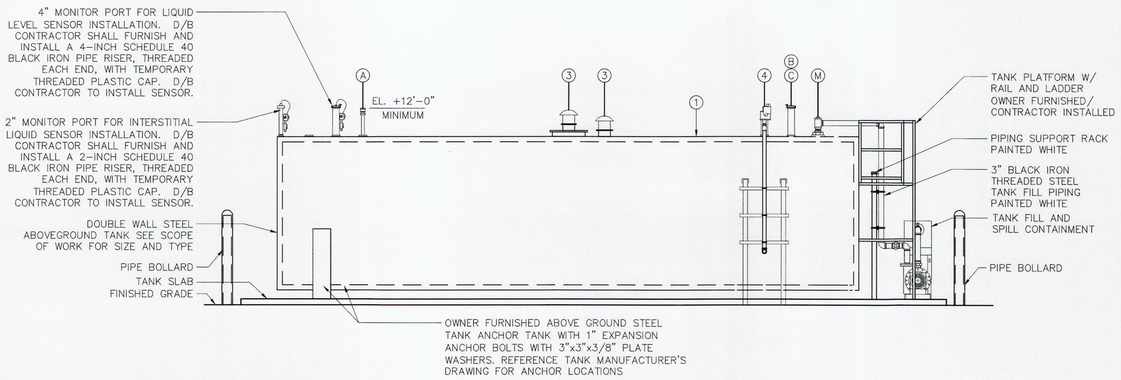

ABOVEGROUND TANK ELEV. (1 / QF-2)

SCALE: 1/4" = 1'-0"

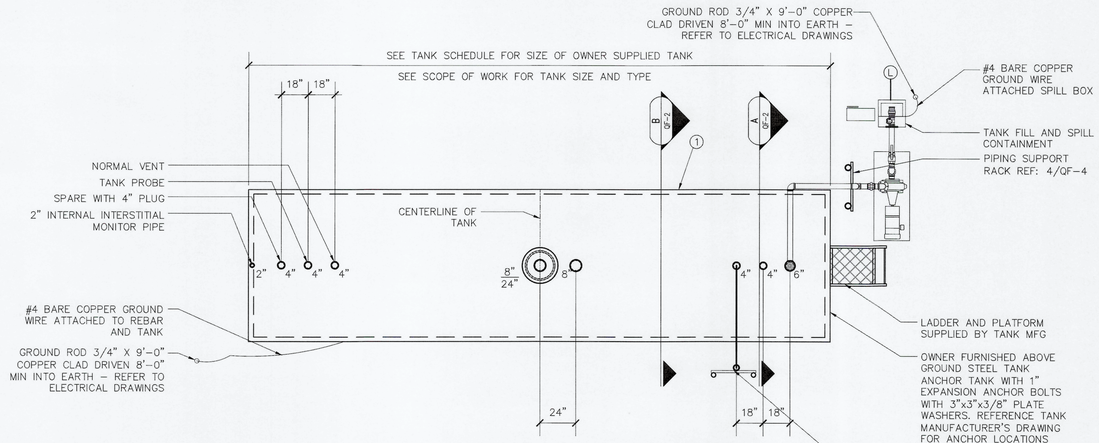

ABOVEGROUND TANK PLAN (2 / QF-2)

SCALE: 1/4" = 1'-0"

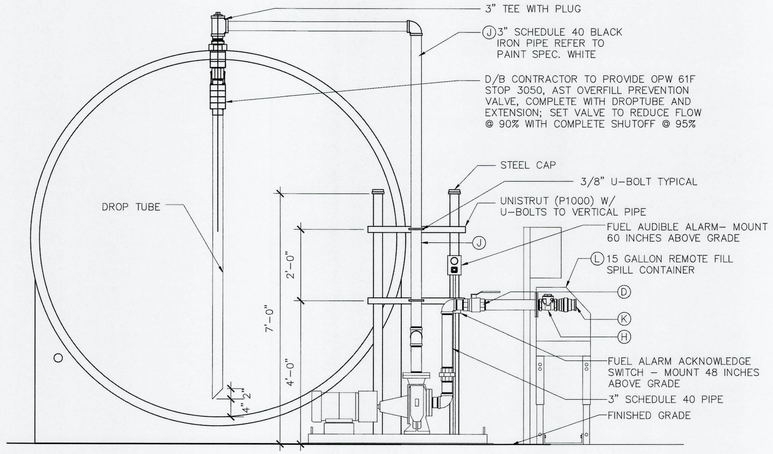

SECTION "A"

SCALE: 1/2" = 1'-0"

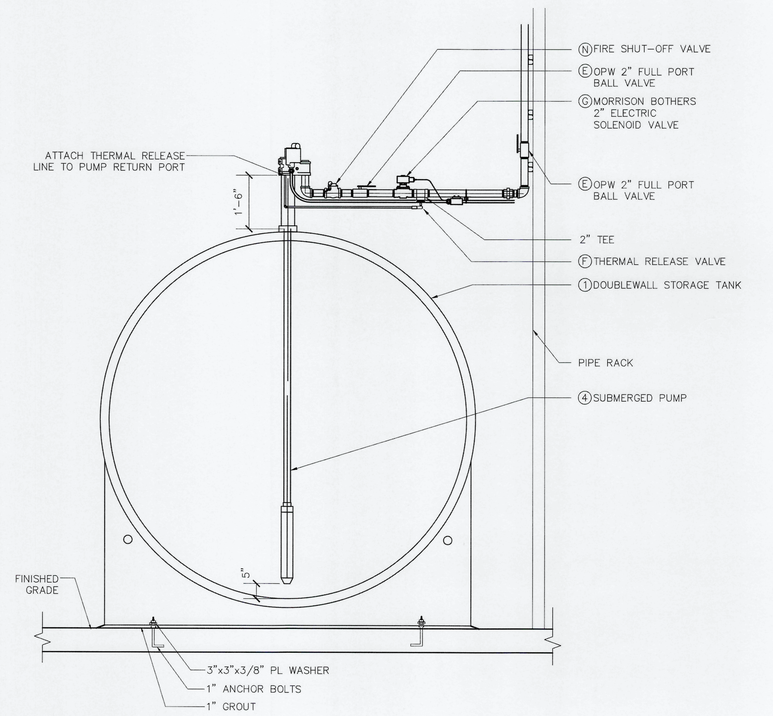

SECTION "B"

SCALE: 1/2" = 1'-0"

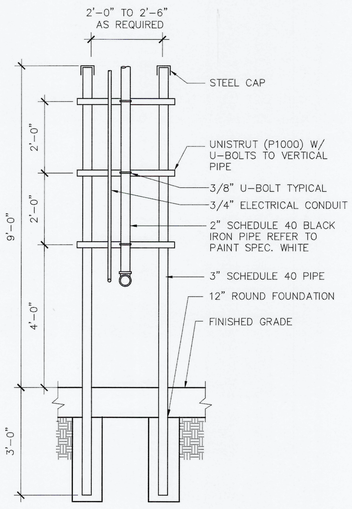

PIPE RACK AT DISPENSERS (5 / QF-2)

@ DISPENERS SCALE: 1/2" = 1'-0"

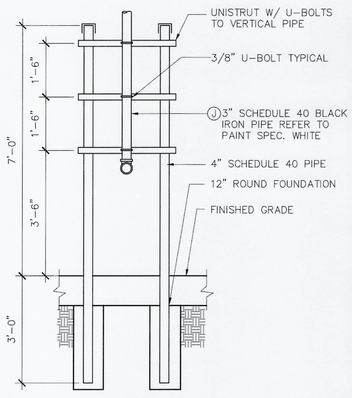

PIPE SUPPORT DETAIL (4 / QF-2)

@ AST FILL SCALE: 1/2" = 1'-0"

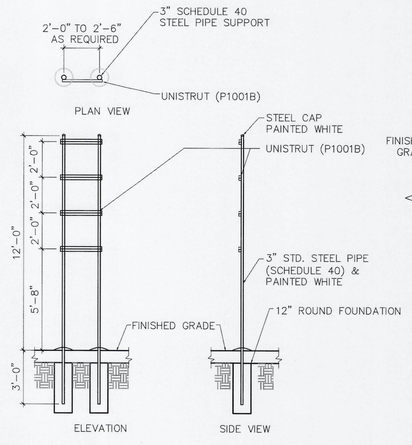

PIPE SUPPORT DETAIL (3 / QF-2)

@ AST PRODUCT LINE SCALE: 1/4" = 1'-0"

GENERAL NOTE:

1. ALL WORK SHALL CONFORM TO LOCAL AND NATIONAL CODES HAVING JURISDICTION, AND LATEST EDITION, PEI/RP200
2. D/B CONTRACTOR SHALL BE RESPONSIBLE FOR OFF LOADING, SETTING, AND ANCHORING THE ABOVEGROUND TANK. IF LADDERS, PLATFORMS, AND HANDRAILS ARE PROVIDED WITH THE TANK, THE D/B CONTRACTOR SHALL SECURE, BOLT, AND FASTEN TO THE TANK.
3. ALL ABOVEGROUND PETROLEUM PIPING SHALL BE SCHEDULE 40 BLACK IRON PIPE WITH 150 PSIG FITTINGS. PROVIDE NECESSARY SUPPORTS, BRACKETS, U-BOLTS AND APPURTENANCES REQUIRED TO SECURE AND HOLD PIPE AND VALVES IN PLACE.
4. ALL FUEL CONTAINMENT PIPING SHALL BE SEALED IN SUCH A MANNER THAT WATER CANNOT PENETRATE THE SYSTEM.
5. D/B CONTRACTOR SHALL FURNISH AND INSTALL MORRISON BROTHERS STAINLESS STEEL DISPENSER PEDESTALS.
6. D/B CONTRACTOR SHALL "TOUCH-UP" THE TANK WITH THE MANUFACTURER'S TOUCH-UP PAINT KIT. THE PRODUCT NAME AND TANK CONNECTIONS SHALL BE STENCILED IN 3-INCH HIGH BLACK LETTERS ON THE SIDE OF THE TANK AS DIRECTED BY OWNER.
7. * ALL EQUIPMENT – SPECIFIED AS SIMILAR OR APPROVED EQUAL.

BILL OF MATERIALS

(APPLIES TO DRAWING QF-2 ONLY)

ITEM	DESCRIPTION
1.	DOUBLE WALL STEEL TANK, SEE SCOPE OF WORK FOR TANK TYPE AND SIZE UL-2085
2.	24" MANWAY
3.	8" EMERGENCY VENT, MORRISON MODEL 244-F
4.	2 HP VARIABLE SPEED FE PETRO PUMP MODEL STP200-VL2
5.	FE PETRO MECHANICAL LEAK DETECTOR
A.	3" VENT, OPW MODEL 523V-1100 OR IF REQUIRED FLAME ARRESTER, OPW MODEL 515ML-1030
B.	4" DIAMETER NIPPLE WITH OPW MODEL 633T ADAPTOR AND TOP SEAL CAP OPW MODEL 634TT LOCKABLE FILL CAP
C.	4" DROP TUBE, OPW MODEL 61T
D.	OPW 3" FULL PORT BALL VALVE (21BV-0300)
E.	OPW 2" FULL PORT BALL VALVE (21BV-0200LH)
F.	OPW THERMAL PRESSURE RELIEF VALVE (82RV-2505) WITH 1/2" SCHEDULE 40 BLACK IRON PIPE
G.	OPW 2" ELECTRIC SOLENOID VALVE (821-0200AC)
H.	3" SWING CHECK VALVE, OPW MODEL 1175-0050
J.	3" BLACK IRON PIPE
K.	3" KAMVALOCK DRY DISCONNECT COUPLER MODEL 1611AN WITH 3" DUST PLUG MODEL 634B, CHAIN TO PIPE.
L.	OPW-6211R-15-1-B4-LB, 15 GALLON REMOTE FILL SPILL CONTAINER
M.	OPW 61F STOP 3050, AST OVERFILL PREVENTION VALVE WITH DROP TUBE AND EXTENSION
N.	OPW 178S-6130 EXTERNAL AST EMERGENCY SHUT-OFF VALVE

TANK SCHEDULE		
CAPACITY TANK SIZE	WIDTH	TANK LENGTH
6,000 GAL	8'-0"	16' LENGTH
8,000 GAL	8'-0"	21' LENGTH
10,000 GAL	8'-0"	27' LENGTH
12,000 GAL	8'-0"	32' LENGTH
10,000 GAL	10'-0"	17' LENGTH
12,000 GAL	10'-0"	21' LENGTH
15,000 GAL	10'-0"	26' LENGTH
20,000 GAL	10'-0"	34' LENGTH

LEGEND

(1) – NUMBERS INDICATE ITEMS FURNISHED BY OWNER INSTALLED BY D/B CONTRACTOR

(A) – LETTERS INDICATE ITEMS FURNISHED AND INSTALLED BY D/B CONTRACTOR

Rev. #	Date	Description

Ryder LC 0173
2 BAY REMODEL FUEL SERVICE ISLAND
3711 CROSSROADS PARKWAY
FORT PIERCE, FLORIDA 34945

DIESEL FUEL SYSTEM
TANK PLANS AND DETAILS

Ryder®

CORE STATES GROUP
1700 Industrial Drive, Suite B
Rogers, AR 72756
Phone (479) 631-0500
FAX (479) 636-8833

Job#:	RYD-25401
Scale:	AS shown
Date:	10-10-18
Drawn By:	BMZ
Checked By:	WLJ

Documents prepared by Core States Group are to be used only for the specific project and specific use for which they are intended. Documents are not to be used to other projects, by owner or any other party, without the written consent of Core States Group. Any unauthorized use of these documents by the user is at the user's own risk. If used in a way not intended by Core States Group is done at the user's own risk. If used in a way not intended by Core States Group, the user shall indemnify Core States Group harmless from all claims and losses.

DAVID M. LEIFER LICENSE No 68170 STATE OF FLORIDA PROFESSIONAL ENGINEER
OCT 16 2018

QF-2

BILL OF MATERIALS

ITEM	DESCRIPTION
(E)	HOSE RETRIEVER– HEAD, PULLEY, CABLES, COUNTERWEIGHT & BASE, UNIVERSAL PART # 871 w/ HOSE SUPPORT, HOSEBUN PART #HB 100 ED

FDEP EQ # SCHEDULE

ITEM	MANUFACTURER	EQUIPMENT DESCRIPTION	EQ. NO.
(1)	HIGHLAND TANK MFG. CO.	UL–2085 ABOVE GROUND DOUBLE WALL STEEL TANK	EQ–673
(5)	FRANKLIN FUELING SYSTEMS	FE PETRO MECHANICAL LINE LEAK DETECTOR	EQ–335
(E)	MORRISON BROTHERS CO.	MODEL 434 STAINLESS STEEL DISPENSER PEDESTAL	EQ–823
(F)	MORRISON BROTHERS CO.	MODEL 434 STAINLESS STEEL DISPENSER PEDESTAL	EQ–823
(L)	OPW	MODEL 6211R 15 GALLON REMOTE FILL CONTAINMENT	EQ–226
(M)	OPW	MODEL 61F–STOP OVERFILL PREVENTION VALVE	EQ–225

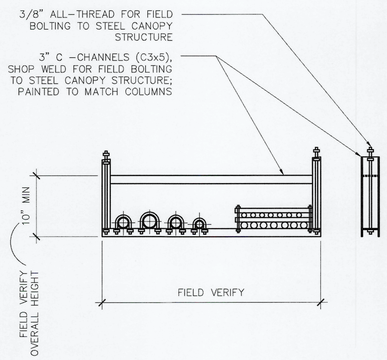

PIPE SUPPORT RACK TO CANOPY — 3 / QF–4

ALL PIPE SUPPORTS BY D/B CONTRACTOR — SCALE: 1" = 1'–0"

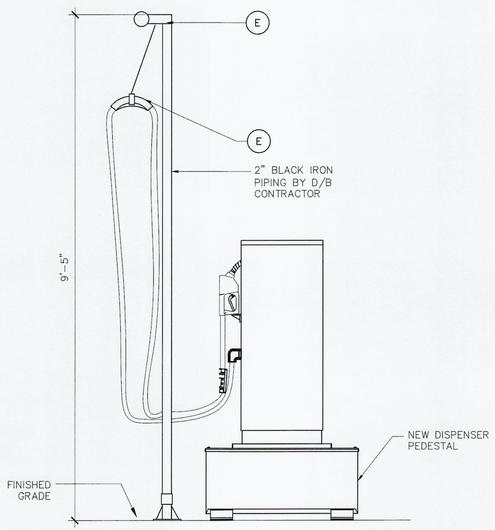

HOSE RETRIEVER — 2 / QF–4

SCALE: 3/4" = 1'–0"

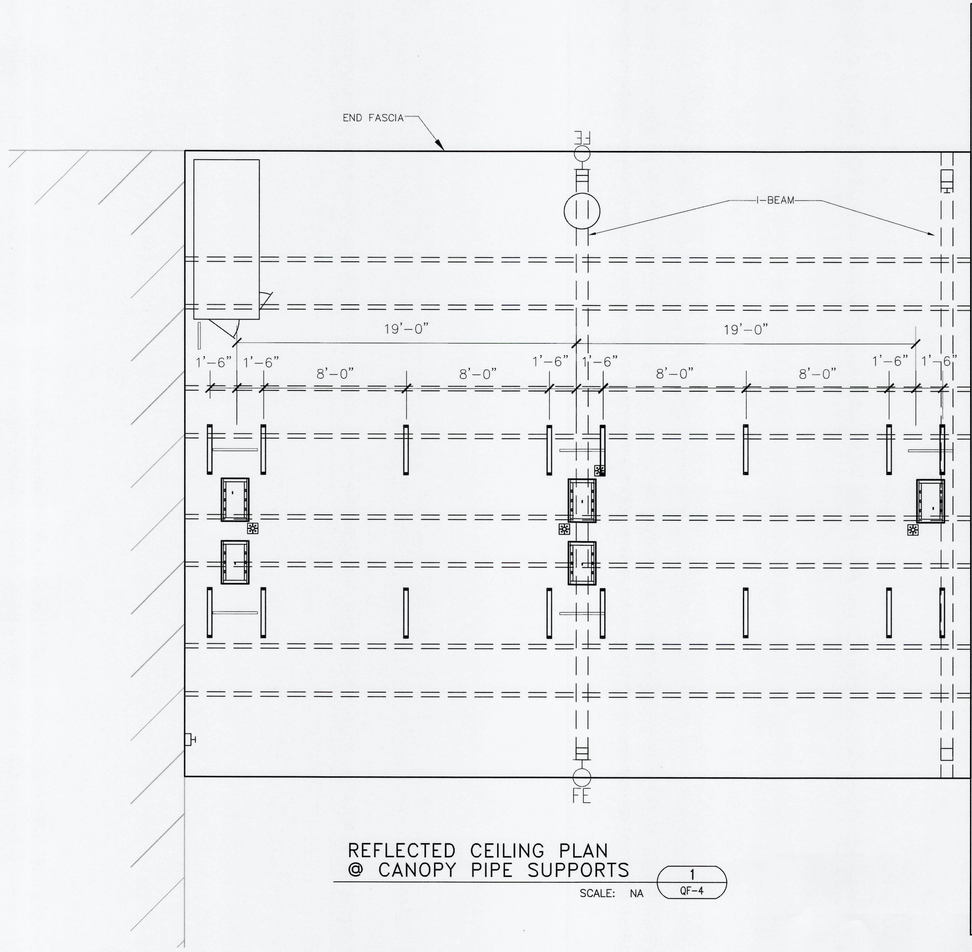

REFLECTED CEILING PLAN @ CANOPY PIPE SUPPORTS — 1 / QF–4

SCALE: NA

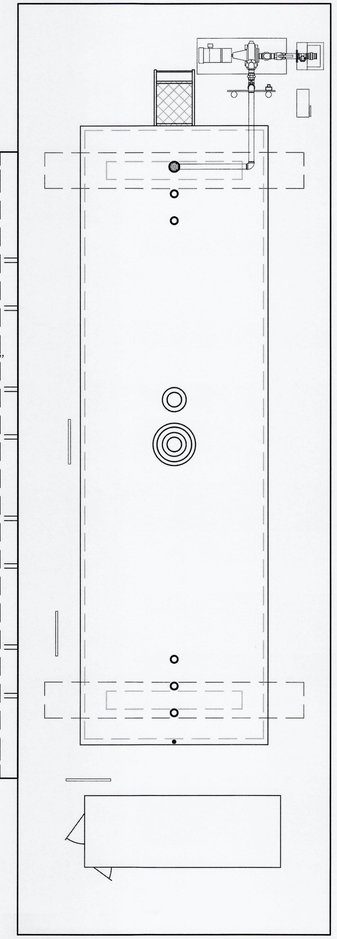

Ryder LC 0173
2 BAY REMODEL FUEL SERVICE ISLAND
3711 CROSSROADS PARKWAY
FORT PIERCE, FLORIDA 34945

FUEL TRANSITION SUMPS AND EQUIPMENT DETAILS

Rev. #	Date	Description

Ryder®

CORE STATES GROUP
1700 Industrial Drive, Suite B
Round Rock, TX 78664
Phone (479) 936-4400
FAX (866) 593-8803

Job#:	RYD-25401
Scale:	AS shown
Date:	10-10-18
Drawn By:	BMZ
Checked By:	WLJ

Documents prepared by Core States Group are to be used only for the intended project and specific use for which they are intended. Any extension of use to other projects, however or any other party, without the expressed, written consent of Core States Group, is used at the user's own risk. If used in a way other than that specifically intended, user will hold Core States Group harmless from all claims and losses.

DAVID M. LEIFER LICENSE No 68170 STATE OF FLORIDA PROFESSIONAL ENGINEER

10/15/2018

QF-4

THIS DRAWING WAS PROVIDED TO CORE STATES GROUP BY BLUE1USA.

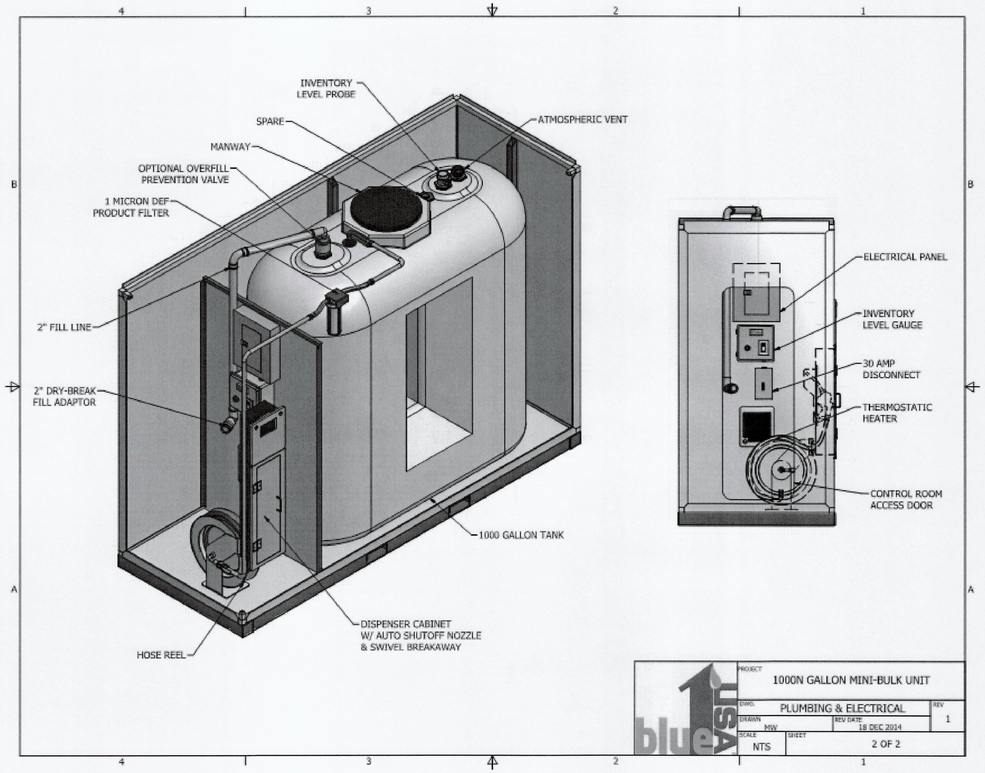

1000 GAL. DEF TANK UL-508A

SCALE: NONE

1 / QF-5

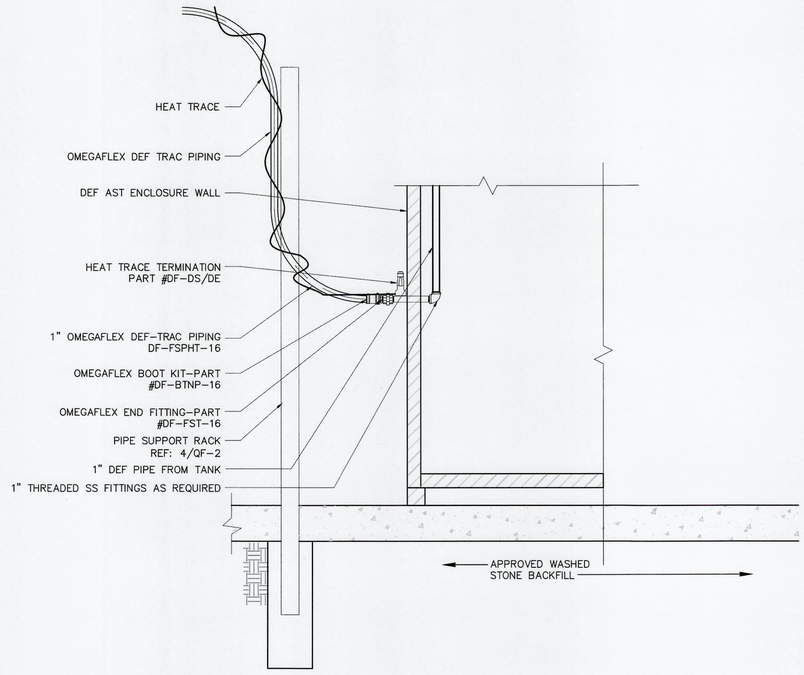

DEF PIPING AT TANK

NA

3 / QF-5

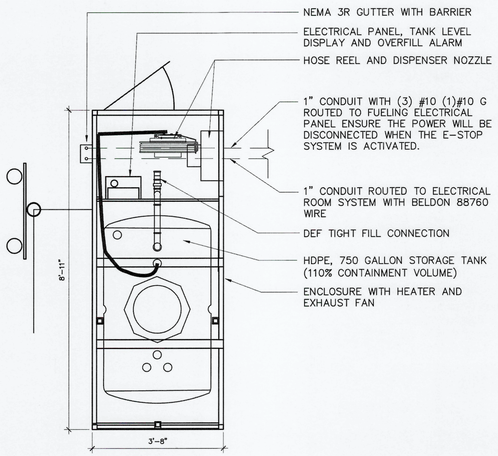

DEF TANK CONTROL ROOM

SCALE: 1/2" = 1'-0"

2 / QF-5

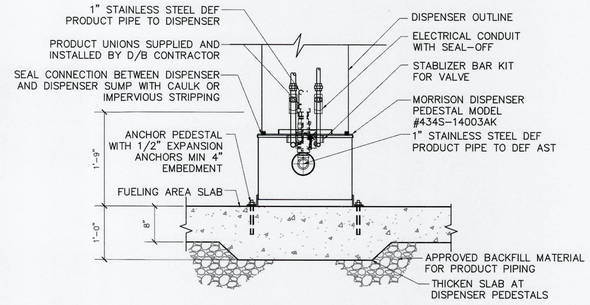

DEF DISPENSER SUMP

SCALE: 3/4" = 1'-0"

4 / QF-5

NOTE:
ALL ELECTRICAL CONDUITS ARE MIN 3/4" WITH SEAL OFFS AT BOTH ENDS OF EACH RUN UNLESS NOTED OTHERWISE.
REF: EF-1 & 2

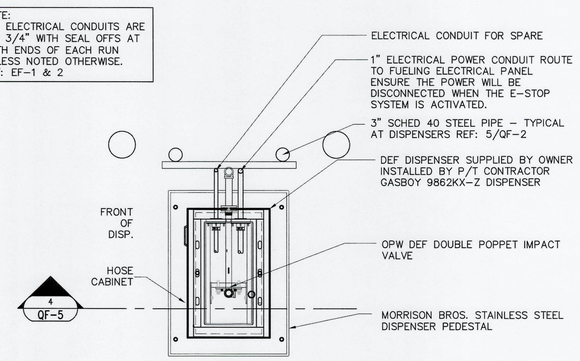

Rev. #	Date	Description

Ryder LC 0173
2 BAY REMODEL FUEL SERVICE ISLAND
3711 CROSSROADS PARKWAY
FORT PIERCE, FLORIDA 34945

DEF TANK AND DETAILS

Ryder®

CORE STATES GROUP
1700 Industrial Drive, Suite B
Rogers, AR 72756
Phone: (479) 464-4440
FAX (866) 592-3803

Job#:	RYD-25401
Scale:	AS shown
Date:	10-10-18
Drawn By:	BMZ
Checked By:	WLJ

Documents prepared by Core States Group are to be used only for the specific project and purpose for which they are intended. Any extension of use to other projects, by owner or others, without the written, expressed, written consent of Core States Group is done at the user's own risk. If used in a way which Core States Group has not intended, user will hold Core States Group harmless from all claims and losses.

DAVID M. LEIFER
LICENSED
No 68170
STATE OF FLORIDA
PROFESSIONAL ENGINEER
OCT 16 2018

QF-5

LIGHT FIXTURE SCHEDULE

TAG	DESCRIPTION	MANUFACTURER	CATALOG NUMBER	MOUNTING	VOLT	VA	LAMP DATA QTY	LAMP DATA LAMP TYPE	REMARKS
A	CANOPY LIGHT	LSI	CRO3 S LED 84 450 CWUE WHT	SURFACE	UNV	157	NA	LED INCLUDED	DIE FORMED ALUMINUM SPECULAR ALUMINUM REFLECTOR DISTRIBUTION: CLEAR GLASS ENCLUSURE
S1	STRIP LIGHT	LSI	S232-SS010-UE	SURFACE	UNV	58	2	32W/SP35	4' 2 LAMP FLUORESCENT STRIP WITH ELECTRONIC BALLAST

NOTE: 1. LIGHT FIXTURES PROVIDED BY OWNER

WIRE SIZING SCHEDULE

LOAD FED	LOAD (AMPS)	CONDUCTORS HOT	CONDUCTORS NEUTRAL	CONDUCTORS GROUND	MAXIMUM CONDUCTOR DISTANCE
DEF DISPENSER (120V)	8	#12 #10 #8 #6	#12 #10 #8 #6	#12 #10 #8 #6	125 200 310 475
DEF DISPENSER HEATER (120V)	10	#12 #10 #8 #6	#12 #10 #8 #6	#12 #10 #8 #6	100 160 245 390
DEF SUBMERSIBLE PUMP (120V)	13.8	#12 #10 #8 #6	#12 #10 #8 #6	#12 #10 #8 #6	70 115 180 275
DIESEL DISPENSER (120V)	8	#12 #10 #8 #6	#12 #10 #8 #6	#12 #10 #8 #6	125 200 310 475
DIESEL SUBMERSIBLE PUMP (120V)	13.8	#12 #10 #8 #6	#12 #10 #8 #6	#12 #10 #8 #6	125 115 180 275
PANEL K FEEDERS (240V)	28	(2) #6 (2) #4 (2) #3 (2) #2	#6 #4 #3 #2	#6 #6 #4 #3	95 150 180 280

NOTES: 1) SCHEDULE IS BASED ON VOLTAGE DROP EQUAL TO OR LESS THAN 3% MAXIMUM FOR BRANCH CIRCUIT
2) CONTACT EOR FOR ANY SITE WITH A MAXIMUM DISTANCE GREATER THAN PRESENTED IN SCHEDULE OR IF THERE IS A CHANGE IN VOLTAGE OR LOAD

ELECTRICAL NOTES

1. WORK SHALL BE PERFORMED IN CONFORMANCE TO THE LATEST EDITION OF THE NATIONAL ELECTRICAL CODE (NFPA 70) AND APPLICABLE LOCAL CODE REQUIREMENTS.
2. SEAL-OFF FITTINGS SHALL BE INSTALLED WHERE CONDUITS EMERGE AT FUEL ISLAND FOR FUEL PUMP, TANK PROBES, DISPENSERS, AND OTHER EQUIPMENT AS REQUIRED BY THE NEC. IN ADDITION, THE SEALED CONDUITS SHALL ALSO HAVE SEAL-OFF FITTINGS AT THE POINT OF EMERGENCE IN THE BUILDING/KIOSK.
3. EQUIPMENT AND DEVICES SHALL BE INSTALLED AS INDICATED IN THEIR MANUFACTURERS' INSTRUCTIONS AND NOTE 1 ABOVE.
4. FEEDER AND CONTROL RACEWAYS SHALL CONTAIN COPPER CONDUCTORS OF A MINIMUM SIZE OF #12 AWG AND USE CONDUITS OF A MINIMUM SIZE OF 3/4 INCH.
5. CONDUCTOR INSULATION COLORS SHALL FOLLOW THE GENERAL ELECTRIC "GEOTROL" COLOR CODE.
6. PANEL SCHEDULES SHALL BE UPDATED BY TYPING IN THE INFORMATION FOR CIRCUITS CONNECTED.
7. RACEWAYS SHALL BE RIGID GALVANIZED STEEL WITH RIGID GALVANIZED STEEL FITTINGS INSTALLED PER MANUFACTURERS' INSTRUCTIONS TO CREATE A WATERTIGHT CORROSION RESISTANT RACEWAY.
8. POWER FEEDS FOR THE FUEL ISLAND EQUIPMENT SHALL ORIGINATE IN "F" PANEL WITH FEED FROM MAIN BUILDING PANEL.
9. POWER FEED(S) FOR CANOPY LIGHTING SHALL ORIGINATE IN EXISTING BUILDING PANEL-ELECTRICIAN TO VERIFY CIRCUIT.
10. FUEL ISLAND ELECTRICAL EQUIPMENT AND STP AS SHOWN ON THE FUEL ISLAND ELECTRICAL PLAN SHALL BE FED FROM SWITCHED NEUTRAL BREAKERS THROUGH A CONTACTOR THAT DISCONNECTS POWER, NEUTRAL, AND GROUND CONDUCTORS FOR EACH ITEM. THE CONTACTOR IS TO BE ACTIVATED IN A FAILSAFE MODE BY THE E-STOP BUTTONS.
11. THE FUEL PUMP CONTROL SHALL LOCATED ADJACENT TO PANEL "F".
12. THE FOLLOWING ITEMS WILL BE PROVIDED BY OWNER:
    A. KIOSK.
    B. FUEL PUMP CONTROLLER.
    C. MASTER AND SATELLITE DISPENSERS.
13. CANOPY LIGHTS SHALL CONTROLLED FROM LOCAL PHOTOCELL ON KIOSK AND HAND-OFF-AUTO SWITCH LOCATED INSIDE KIOSK.
14. PROVIDE "HEAVY-WALLED RIGID HOT-DIP GALVANIZED" CONDUIT. RIGID NONMETALLIC CONDUIT (RNC) IS ALLOWED FOR UNDERGROUND RUNS IF CONDUIT IS BURIED AT A MINIMUM OF 2' WITH THE EXCEPTION OF THE LAST 2' OF THE UNDERGROUND RUN WHERE AHJ ALLOWS.

ELECTRICAL SYMBOLS LEGEND

SYMBOL	DESCRIPTION
□	LIGHT FIXTURE (REF SCHEDULE)
P	PULL BOX
●	E-STOP
$3	SWITCH, 3-WAY
$M	SWITCH, MANUAL MOTOR
	RECEPTACLE, DUPLEX
	EQUIPMENT CONNECTION POINT (PROVIDED WITH EQUIPMENT)
	CIRCUIT, CONCEALED IN SLAB FLOOR E INDICATES EXISTING WIRING
	CIRCUIT, EXPOSED, E INDICATES EXISTING WIRING
	MOTOR
	PANELBOARD
T	THERMOSTAT
ABBREVIATIONS	
AC	ABOVE COUNTER
A.F.F.	ABOVE FINISHED FLOOR
GFI	GROUND FAULT CIRCUIT INTERRUPTER
PC	PHOTO CELL- FIELD VERIFY LOCATION
WP	WEATHER PROOF

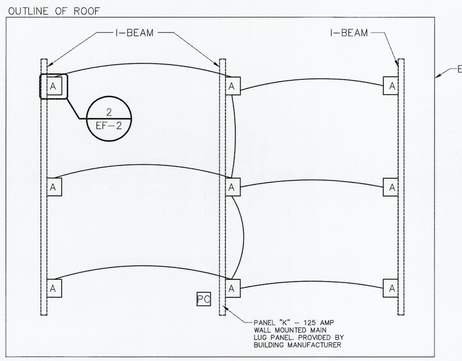

2 CANOPY LIGHTING PLAN
1/8"=1'-0"

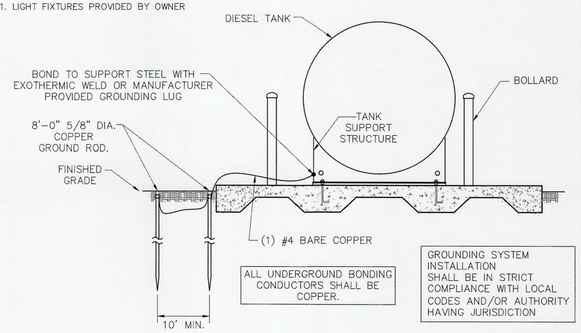

3 TANK GROUNDING SYSTEM
NTS

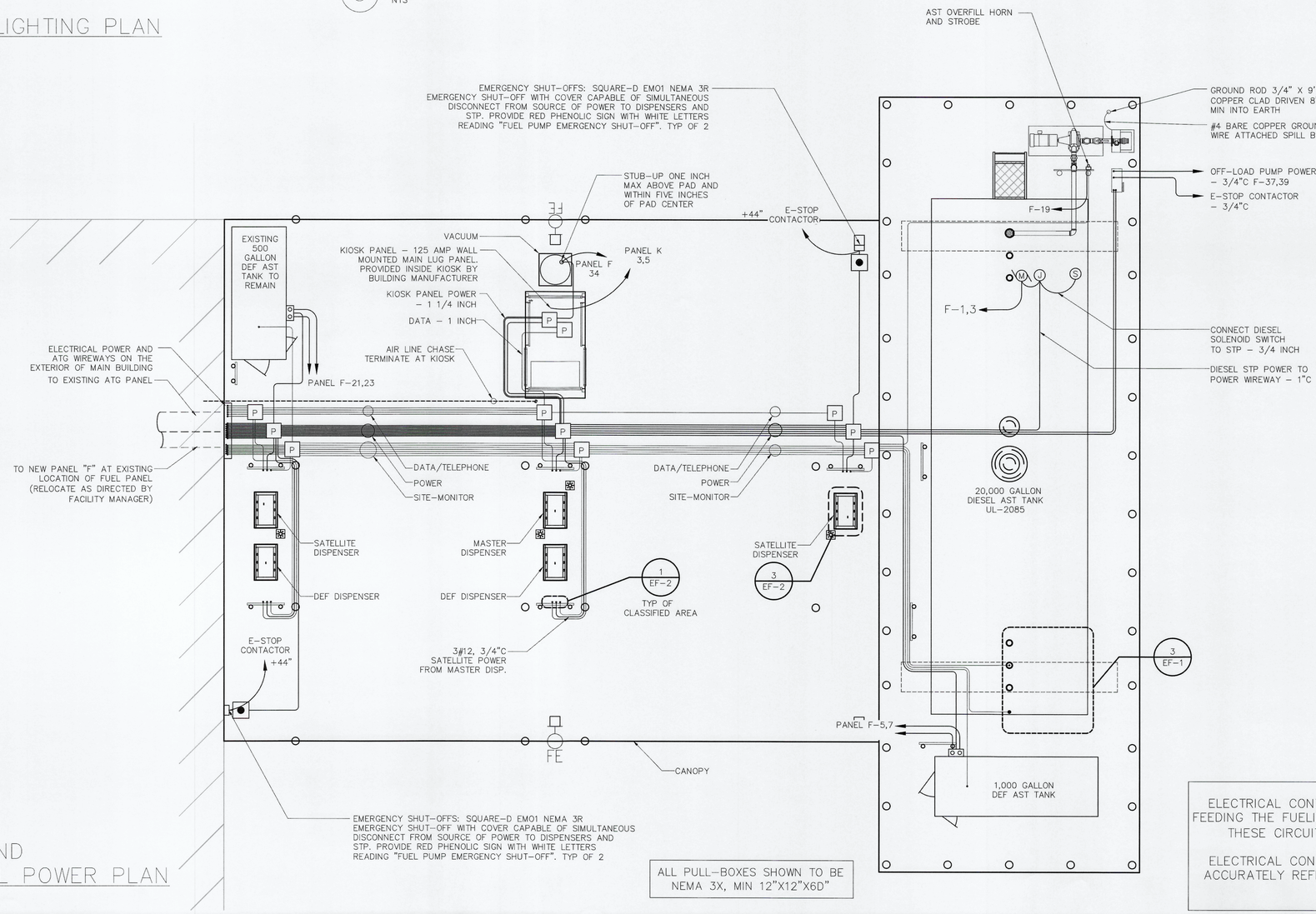

1 FUEL ISLAND ELECTRICAL POWER PLAN
1/4"=1'-0"

ALL PULL-BOXES SHOWN TO BE NEMA 3X, MIN 12"X12"X6D"

ELECTRICAL CONTRACTOR TO REMOVE ALL CIRCUITRY CURRENTLY FEEDING THE FUELING EQUIPMENT AND KIOSK FROM EXISTING PANELS. THESE CIRCUITS WILL NOW BE LOCATED IN NEW PANEL "F".

ELECTRICAL CONTRACTOR TO UPDATE ALL PANEL SCHEDULES TO ACCURATELY REFLECT CIRCUITRY THROUGHOUT PRIOR TO PROJECT COMPLETION.

Rev. # | Date | Description

Ryder LC 0173
2 BAY REMODEL FUEL SERVICE ISLAND
3711 CROSSROADS PARKWAY
FORT PIERCE, FLORIDA 34945

FUEL ISLAND POWER & LIGHTING PLANS

Ryder®

CORE STATES GROUP
1700 Industrial Drive, Suite B
Round Rock, TX 78681
Phone (479) 986-4400
FAX (866) 593-8803

Job#:	RYD-25401	Drawn By:	BMZ
Scale:	AS shown	Checked By:	WLJ
Date:	10-10-18		

Documents prepared by Core States Group are to be used only for the particular project and specific use for which they are intended. Any extension of use to other projects, by owner or anyone else, without written consent of Core States Group is done at their sole risk and without liability in any way other than that specifically intended, user will hold Core States Group harmless from all claims and losses.

JOHN D. PETERSON
LICENSE NO. 67173
STATE OF FLORIDA
PROFESSIONAL ENGINEER
OCT 16 2018

EF-1

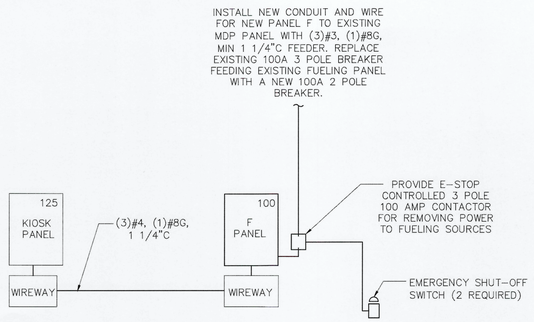

6 ONE-LINE DIAGRAM
N.T.S.

ELECTRICAL CONTRACTOR TO REMOVE ALL CIRCUITRY CURRENTLY FEEDING THE FUELING EQUIPMENT AND KIOSK FROM EXISTING PANELS. THESE CIRCUITS WILL NOW BE LOCATED IN NEW PANEL "F".

ELECTRICAL CONTRACTOR TO UPDATE ALL PANEL SCHEDULES TO ACCURATELY REFLECT CIRCUITRY THROUGHOUT PRIOR TO PROJECT COMPLETION.

PANELBOARD: F (NEW)

BUS AMPS: 125A
MAIN SIZE/TYPE: 125A MCB
VOLTS/PHASE: 208Y/120V, 1PH, 3W
SERVES: FUEL ISLAND
LOCATION: MAIN SERVICE BUILDING
EQUIPMENT GROUND BUS
FULLY RATED PANELBOARD
10,000 AIC
MOUNTING: SURFACE

	CKT NO.	DESCRIPTION	VOLTAMPS/PHASE A	VOLTAMPS/PHASE B	WIRE NO.	BKR AMP	P	P	BKR AMP	WIRE NO.	VOLTAMPS/PHASE A	VOLTAMPS/PHASE B	DESCRIPTION	CKT NO.
	1	DIESEL SUBMERSIBLE PUMP	1,248		10	20	2	1	20	12			DIESEL MASTER/SATELLITE DISPENSER	2 SW
	3			1,248				–					CONTROL VALVE POWER SIDE 1	4
	5	DEF CONTROL PANEL (1)	1,000		10	20	2	1	20	12			DIESEL MASTER/SATELLITE DISPENSER	6 SW
	7			1,000				–					CONTROL VALVE POWER SIDE 2	8
SW	9	DEF DISPENSER #2 UNIT POWER	24		12	20	1	1	20	12	264		DIESEL MASTER/SATELLITE DISPENSER	10 SW
	11							–					ELECTRONICS POWER	12
SW	13	DEF DISPENSER #2 ELECTRONICS PWR	264		12	20	1	1	20	12	24		DEF DISPENSER #1 UNIT POWER	14 SW
	15							–						16
	17	SPACE			– –	– –	1	1	20	12	264		DEF DISPENSER #1 ELECTRONICS PWR	18 SW
	19	AST OVERFILL ALARM HORN/STROBE		100	12	15	1	–						20
	21	DEF CONTROL PANEL (2)	1,000		10	20	2	1	– –	– –			SPACE	22
	23			1,000				1	– –	– –			SPACE	24
	25	SPACE			– –	– –	1	1	– –	– –			SPACE	26
	27	SPACE			– –	– –	1	1	– –	– –			SPACE	28
	29	SPACE			– –	– –	1	1	– –	– –			SPACE	30
G,L	31	HEAT TRACE		600	12	15	1	1	20	12		1,200	VACUUM	32
	33	SPACE			– –	– –	1	1	– –	– –			SPACE	34
	35	DEF OVERFILL ALARM HORN/STROBE		100	12	15	1	1	– –	– –			SPACE	36
	37	OFF LOAD PUMP	3,220		6	60	2	2	50	6	2,049		PANEL K	38
	39			3,220								2,736		40
	41	SPACE			– –	– –	1	1	– –	– –			SPACE	42
		SUBTOTAL	6,756	7,268							2,649	3,936	SUBTOTAL	

		LOAD	CONN. VA	DF	LOAD	CONN. VA	DF	
TOTAL PHASE A – VA	9,405	COOLING		0			1.00	
AMPS	78	HEATING	4,032	1.00			1.25	
TOTAL PHASE B – VA	11,204	LIGHTING	33	1.25			1.00	
AMPS	93	RECEPTACLES	720	1.0/.5			1.00	
TOTAL PNLBD – VA	20,609	MOTORS	8,936	1.00			1.25	TOTAL DEMAND
AMPS	99	SUPP HEAT		1.00			1.25	20,617 VA
		MISC EQUIP	6,888	1.00			1.00	99 A

SW – SWITCHED NEUTRAL CIRCUIT BREAKER
G – 30mA TRIP GFCI BREAKER
L – LOCKABLE

PANELBOARD: K (NEW)

BUS AMPS: 125A
MAIN SIZE/TYPE: MLO
VOLTS/PHASE: 208Y/120V, 1PH, 3W
SERVES: KIOSK
LOCATION: KIOSK
EQUIPMENT GROUND BUS
FULLY RATED PANELBOARD
MOUNTING: SURFACE

CKT NO.	DESCRIPTION	VOLTAMPS/PHASE A	VOLTAMPS/PHASE B	WIRE NO.	BKR AMP	P	P	BKR AMP	WIRE NO.	VOLTAMPS/PHASE A	VOLTAMPS/PHASE B	DESCRIPTION	CKT NO.
1	KIOSK LIGHT	33		12	20	1	1	– –	– –			SPACE	2
3	KIOSK HEATER		2,016	10	25	2	1	20	12		720	CONVENIENCE RECEPTACLES	4
5		2,016					1	– –	– –			SPACE	6
7	SPACE			– –	– –	1	1	– –	– –			SPACE	8
9	SPACE			– –	– –	1	1	– –	– –			SPACE	10
11	SPACE			– –	– –	1	1	– –	– –			SPACE	12
	SUBTOTAL	2,049	2,016								720	SUBTOTAL	

		LOAD	CONN. VA	DF	LOAD	CONN. VA	DF	
TOTAL PHASE A – VA	2,049							
AMPS	17	COOLING		0			1.00	
TOTAL PHASE B – VA	2,736	HEATING	4,032	1.00			1.25	
AMPS	23	LIGHTING	33	1.25			1.00	
TOTAL PNLBD – VA	4,785	RECEPTACLES	720	1.0/.5			1.00	
AMPS	23	MOTORS		1.00			1.25	TOTAL DEMAND
		SUPP HEAT		1.00			1.25	4,793 VA
		MISC EQUIP		1.00			1.00	23 A

* – IF 5200 BTU HEATER OPTION IS SELECTED, USE SINGLE POLE 20A BREAKER (1500VA). MATCH AIC RATING. PROVIDED BY BUILDING MANUFACTURER

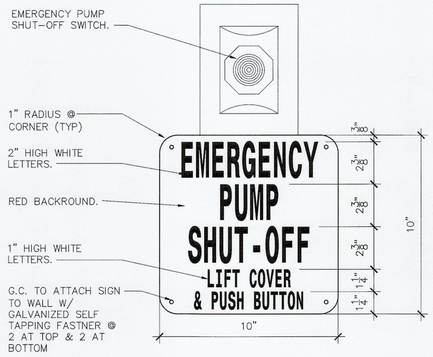

5 SIGNAGE @ EMERGENCY PUMP SHUT-OFF
N.T.S. 3"=1'-0"

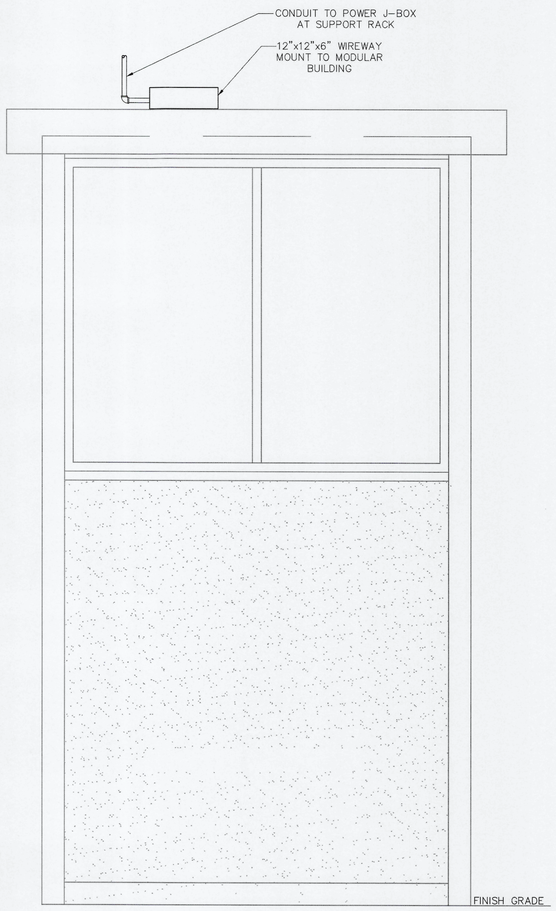

4 WIREWAY MOUNTING
NTS

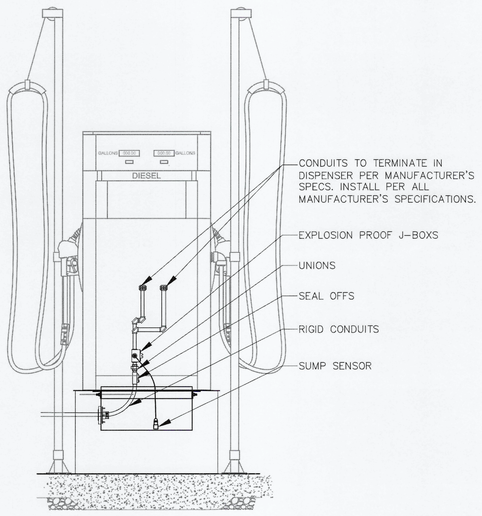

3 CONDUIT AT SUMP
N.T.S.

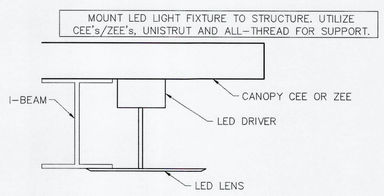

2 LED MOUNTING DETAIL
N.T.S.

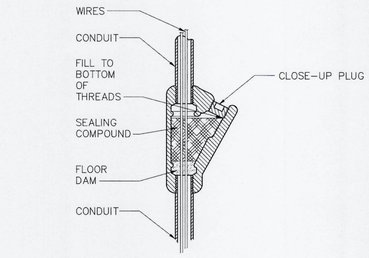

1 CONDUIT SEAL-OFF
N.T.S.

NOTE: THIS DRAWING IS TO BE USED AS A SCHEMATIC DRAWING. IT IS THE RESPONSIBILITY OF THE D/B CONTRACTOR AND ELECTRICAL CONTRACTOR TO VERIFY ELECTRICAL CONDUIT NUMBER AND SIZE WITH RYDER REPRESENTATIVE FOR REQUIRED BEFORE INSTALLATION.

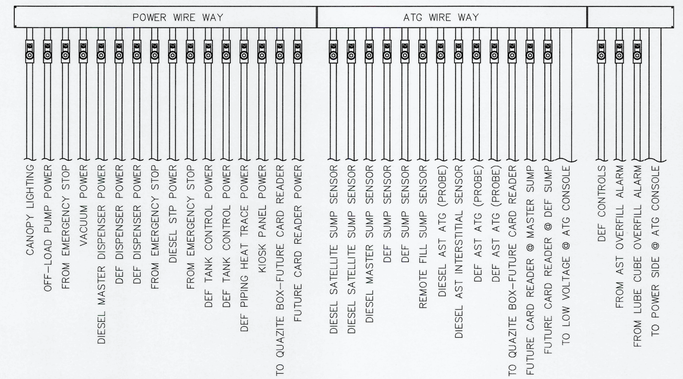

7 ELECTRICAL ROOM WIRE WAY
N.T.S.

Description	Date	Rev. #

Ryder LC 0173
2 BAY REMODEL FUEL SERVICE ISLAND
3711 CROSSROADS PARKWAY
FORT PIERCE, FLORIDA 34945

FUEL ISLAND ELECTRICAL DETAILS

Ryder

CORE STATES GROUP
1700 Industrial Drive, Suite B
Rogers, AR 72756
Phone: (479) 936-6400
FAX: (866) 593-8803

Job#:	RYD-25401
Scale:	AS shown
Date:	10-10-18
Drawn By:	BMZ
Checked By:	WLJ

Documents prepared by Core States Group are to be used only for the specific project and specific use for which they are intended. Any extension of use to other projects, by owner or others without the written, expressed, written consent of Core States Group is done at their own risk and without liability in any way other than that specifically intended, user will hold Core States Group harmless from all claims and losses.

JOHN FERGUSON LICENSE No. 67173 STATE OF FLORIDA PROFESSIONAL ENGINEER
10/16/18

EF-2

ELECTRICAL SYMBOLS LEGEND

SYMBOL	DESCRIPTION
J	JUNCTION BOX – SIZED PER NEC BY D/B CONTRACTOR
ID	INTERSTITIAL PROBE M/N–TS WITH DRY KIT TSP–K12 (FOR 2 INCH) OR WITH DRY KIT TSP–KI4 (FOR 4 INCH)
IW	INTERSTITIAL PROBE FOR BRINE FILLED SPACE M/N TSP– HIS WITH WET KIT TSP–KZ4 (FOR 4 INCH VENTED CAP)
S	SUMP SENSOR BY INCON TSP–ULS
L1	LEVEL PROBE 1 FLOAT – M/N TSP–LL2C W/KIT TSP–K4A AND FLOAT TSP–SSP
L2	LEVEL PROBE 2 FLOAT – M/N TSP–LL2 W/KIT TSP–K4A(4") AND FLOATS TSP–IDF4
P	FUEL PUMP, 1–1/2 HP, 208VAC, 1ø, 60 HZ.
	FLEXIBLE ENTRY BOOT OPW EBF–0751 OR SIZED AS REQUIRED
	CONDUIT SEAL
AC	– MOUNTED ABOVE COUNTER
A.F.F.	– ABOVE FINISHED FLOOR
F	– FLOOR MOUNTED
GFI	– GROUND FAULT INTERRUPTING RECEPTACLE
IG	– ISOLATED GROUND
PC	– PHOTO CELL
UC	– UNDER COUNTER
UM	– UNDER MEZZANINE
WP	– WEATHERPROOF
P & C	– PLUG & CORD CONNECTED THROUGH MATCHING RECEPTACLE
HW	– HARD WIRED
	TLS ACKNOWLEDGE SWITCH BY INCON M/N–TSP–RK
	TLS OVERFILL ALARM BY INCON M/N–TSP–RA2

ELECTRICAL NOTES

1. CONDUIT SYSTEMS ORIGINATING AT THE ATG WIREWAY SHALL END AT JUNCTION BOXES IN SENSOR WELL/SUMP. PULL ROPES SHALL BE INSTALLED FROM EACH SENSOR WELL JUNCTION BOX TO THE ATG WIREWAY. INSTALL TAGS ON THE ENDS OF EACH PULL ROPE THAT INDICATE UNIQUELY WHERE THE OTHER END OF THE CONDUIT IS LOCATED. SENSORS AND SENSOR CABLES WILL BE INSTALLED BY OTHERS. LOCATE EACH SENSOR WELL JUNCTION BOX AS CLOSE AS PRACTICAL TO THE SENSOR LOCATION.
2. REFER TO PROCESS DRAWINGS FOR TANK SUMP AND WELL DETAILS.
3. REFER TO PROCESS DRAWINGS FOR OIL/WATER SEPARATOR DETAILS.
4. SEAL FITTINGS ARE REQUIRED AT EACH SENSOR BUT ARE NOT SHOWN FOR SIMPLICITY.
5. CONDUITS USED IN THE ATG SYSTEM SHALL BE LABELED "ATG CONDUIT" WITH A PERMANENTLY ATTACHED WATERPROOF LABEL WITH A WHITE BACKGROUND AND BLACK 1/4" HIGH LETTERS. THE LABELS SHALL BE AFFIXED ON EACH PIECE CONDUIT ABOVEGROUND INSIDE THE BUILDING. LABEL SPACING SHALL NOT EXCEED 10 FEET.
6. CONDUITS USED IN THE ATG SYSTEM TO CONVEY INTRINSICALLY SAFE WIRING SHALL BE LABELED AS INDICATED IN NOTE 5 ABOVE AND SHALL HAVE ADJACENT SIMILARLY CONSTRUCTED LABELS THAT READ: "INTRINSICALLY SAFE WIRING".
7. PROVIDE "HEAVY–WALLED RIGID HOT–DIP GALVANIZED" CONDUIT. RIGID NONMETALLIC CONDUIT (RNC) IS ALLOWED FOR UNDERGROUND RUNS IF CONDUIT IS BURIED AT A MINIMUM OF 2' WITH THE EXCEPTION OF THE LAST 2' OF THE UNDERGROUND RUN WHERE AHJ ALLOWS.

SCOPE OF WORK

ITEM	DESCRIPTION	DESIGN/ BUILD CTR
1	ATG WIREWAY	X
2	CONDUIT SYSTEM FROM ATG WIREWAY TO SENSOR JBOXES INCLUDING PULL ROPES	X
3	FEEDER INCLUDING CONDUIT AND WIRE FROM ELECTRICAL PANEL TO POWER CIRCUIT PROTECTOR	X
4	MOUNT EQUIPMENT: a. ATG CONSOLE b. ALARM BOXES c. ACKNOWLEDGE SWITCHES d. SENSORS e. POWER CIRCUIT PROTECTOR	X
5	HIGH LEVEL RELAY	X
6	CONDUIT SYSTEM BETWEEN ITEMS 4 AND 5 INCLUDING PULL ROPES EXCEPT ITEMS 7 AND 8	X
7	CONDUIT FROM ATG CONSOLE TO ATG WIREWAY	X
8	CONDUIT FROM ATG CONSOLE TO POWER CIRCUIT PROTECTOR	X
9	SENSOR CABLES	X
10	CONTROL WIRES/CABLES	X
11	TERMINATIONS EXCEPT AT ELECTRIC PANEL C/M	X
12	TERMINATIONS AT ELECTRIC PANEL C/M	X

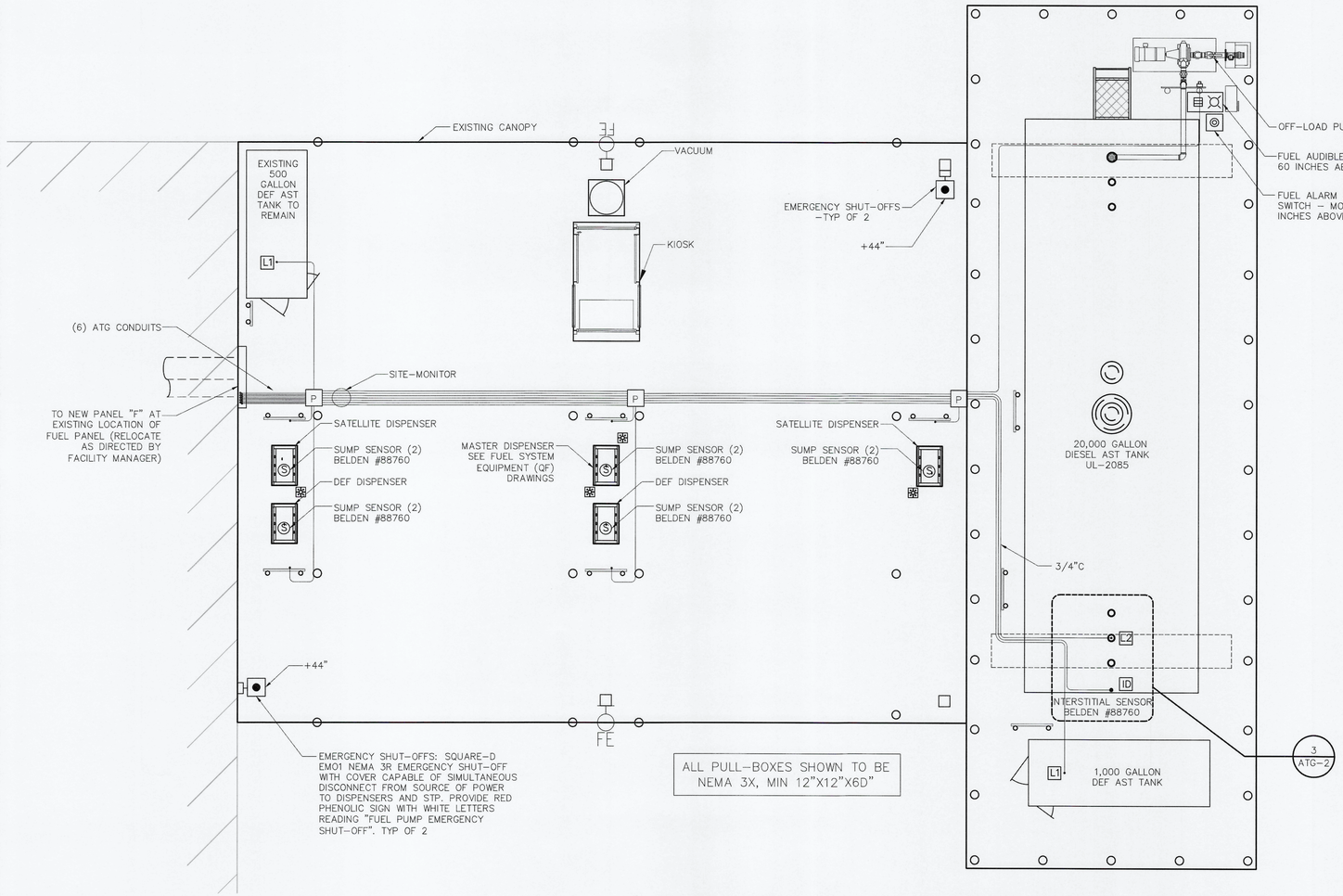

1 FUEL ISLAND GUAGING PLAN
1/8"–1'–0"

Ryder LC 0173
2 BAY REMODEL FUEL SERVICE ISLAND
3711 CROSSROADS PARKWAY
FORT PIERCE, FLORIDA 34945

AUTOMATIC TANK GAUGING SYSTEM PLANS- AST

Rev. #	Date	Description

Ryder®

CORE STATES GROUP
1700 Industrial Drive, Suite B
Rogers, AR 72758
Phone (479) 986-4400
Fax (866) 550-6639

Job#:	RYD-25401
Scale:	AS shown
Date:	10-10-18
Drawn By:	BMZ
Checked By:	WLJ

Documents prepared by Core States Group are intended only for the specific project and specific use for which they are prepared. They are not suitable for reuse by owner or others on extensions of the project or on any other project, without the written permission of Core States Group. Any reuse without such permission or adaptation to the user's own risk. If used in a way other than that specifically intended, user will hold Core States Group harmless from all claims and losses.

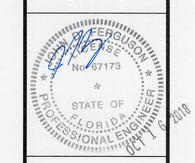

ATG-1

BULK AND USED OIL SYSTEM NOTES

1. CONDUIT SYSTEMS ORIGINATING AT THE ATG IN LOCATIONS WITH 40 OR MORE HEATING DEGREE DAYS, OWNER WILL FURNISH A 2,000 WATT TANK HEATER FOR THE NEW MOTOR OIL TANK. D/B CONTRACTOR TO INSTALL. D/B CONTRACTOR MUST PROVIDE A 20 AMP CIRCUIT BREAKER FOR EACH HEATER. SET HEATER TEMPERATURE AT SETTING APPROVED BY OWNERS' REPRESENTATIVE.
2. OVERFILL ALARM TO BE PLACED ON BUILDING IN TANK AREA NEAR FILL.
3. OWNER WILL PROVIDE A LIQUID LEVEL MONITOR WITH AN AUDIBLE CONSOLE, WITH TEST AND RESET SWITCH. D/B CONTRACTOR TO INSTALL NECESSARY CONDUIT WITH PULL ROPES. DEVICES, WIRES, AND TERMINATIONS BY OTHERS.
4. THE NEW AND USED OIL TANKS ARE TO BE GROUNDED WITH A 5/8"ø x 10'-0" LONG COPPER CLAD STEEL GROUND ROD AND #6 BARE STRANDED COPPER GROUND WIRE.
5. INTERSTITIAL SENSORS ARE USED ONLY FOR DOUBLE WALL TANKS.

ELECTRICAL SYMBOLS LEGEND

SYMBOL	DESCRIPTION
J	JUNCTION BOX – SIZED PER NEC BY D/B CONTRACTOR
ID	INTERSTITIAL PROBE M/N-TS WITH DRY KIT TSP-KI2 (FOR 2 INCH) OR WITH DRY KIT TSP-KI4 (FOR 4 INCH)
IW	INTERSTITIAL PROBE FOR BRINE FILLED SPACE M/N TSP- HIS WITH WET KIT TSP-KZ4 (FOR 4 INCH VENTED CAP)
S	SUMP SENSOR BY INCON TSP-ULS
L1	LEVEL PROBE 1 FLOAT – M/N TSP-LL2C W/KIT TSP-K4A AND FLOAT TSP-SSP
L2	LEVEL PROBE 2 FLOAT – M/N TSP-LL2 W/KIT TSP-K4A(4") AND FLOATS TSP-IDF4
P	STP, 1-1/2 HP, 208VAC, 1ø, 60 HZ.
	FLEXIBLE ENTRY BOOT OPW EBF-0751 OR SIZED AS REQUIRED
	CONDUIT SEAL
AC	– MOUNTED ABOVE COUNTER
A.F.F.	– ABOVE FINISHED FLOOR
F	– FLOOR MOUNTED
GFI	– GROUND FAULT INTERRUPTING RECEPTACLE
GND	– GROUND FAULT INTERRUPTING RECEPTACLE
IG	– GROUND
PC	– PHOTO CELL
UC	– UNDER COUNTER
UM	– UNDER MEZZANINE
WP	– WEATHERPROOF
P & C	– PLUG & CORD CONNECTED THROUGH MATCHING RECEPTACLE
HW	– HARD WIRED
	TLS ACKNOWLEDGE SWITCH BY INCON M/N-TSP-RK
	TLS OVERFILL ALARM BY INCON M/N-TSP-RA2

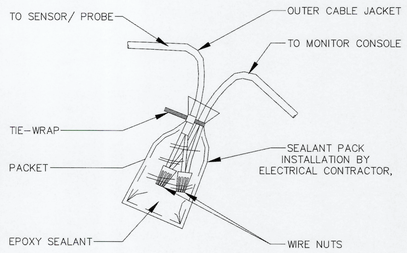

3 EPOXY FILLED SPLICE KIT
NTS

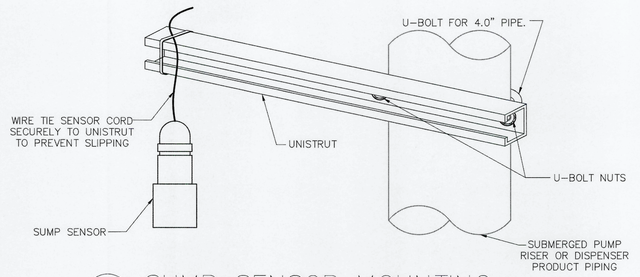

2 SUMP SENSOR MOUNTING
NTS

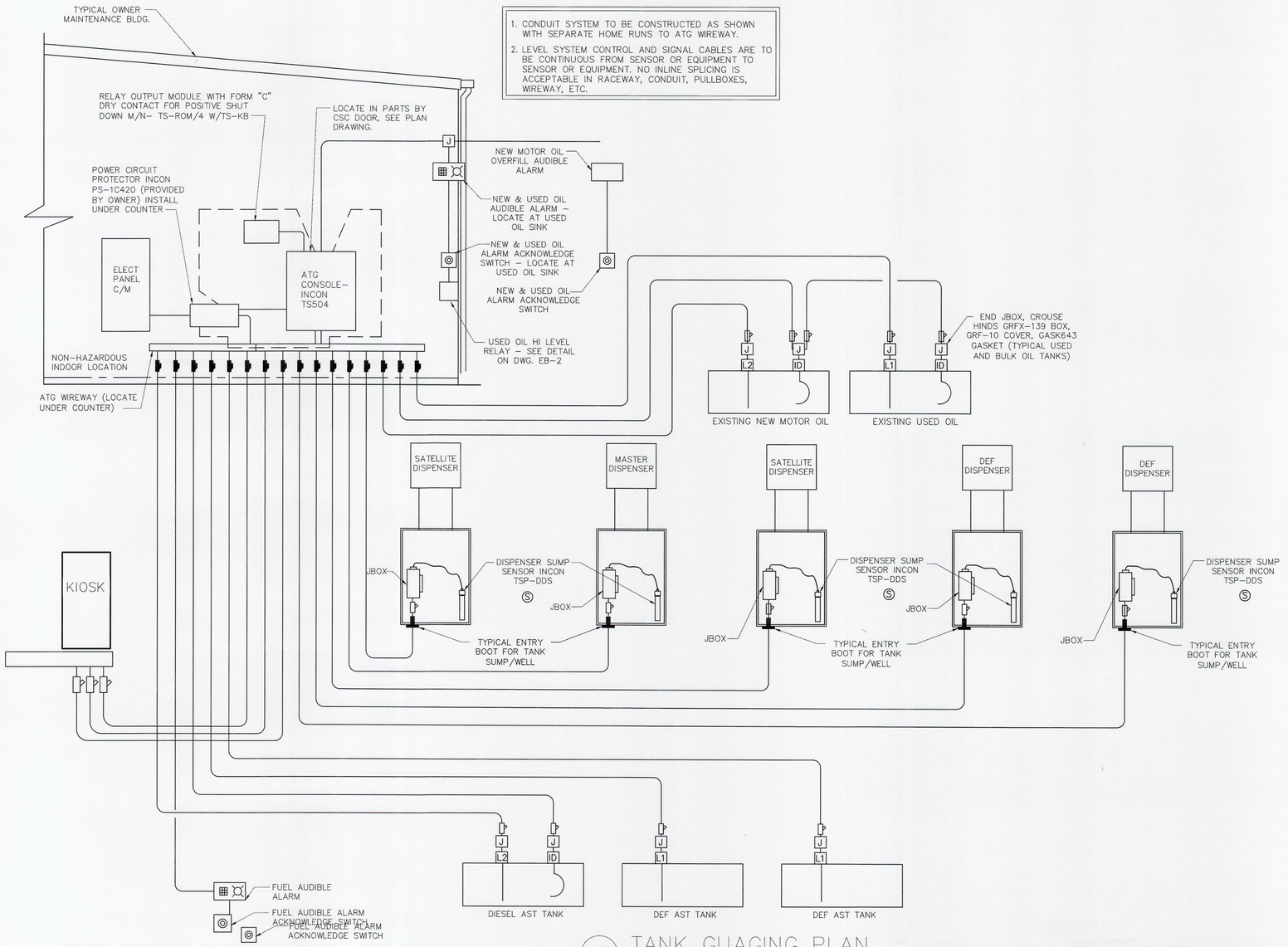

1 TANK GUAGING PLAN
NTS

ELECTRICAL NOTES

1. CONDUIT SYSTEMS ORIGINATING AT THE ATG WIREWAY SHALL END AT JUNCTION BOXES IN SENSOR WELL/SUMP. PULL ROPES SHALL BE INSTALLED FROM EACH SENSOR WELL JUNCTION BOX TO THE ATG WIREWAY. INSTALL TAGS ON THE ENDS OF EACH PULL ROPE THAT INDICATE UNIQUELY WHERE THE OTHER END OF THE CONDUIT IS LOCATED. SENSORS AND SENSOR CABLES WILL BE INSTALLED BY OTHERS. LOCATE EACH SENSOR WELL JUNCTION BOX AS CLOSE AS PRACTICAL TO THE SENSOR LOCATION.
2. REFER TO PROCESS DRAWINGS FOR TANK SUMP AND WELL DETAILS.
3. REFER TO PROCESS DRAWINGS FOR OIL/WATER SEPARATOR DETAILS.
4. SEAL FITTINGS ARE REQUIRED AT EACH SENSOR BUT ARE NOT SHOWN FOR SIMPLICITY.
5. CONDUITS USED IN THE ATG SYSTEM SHALL BE LABELED "ATG CONDUIT" WITH A PERMANENTLY ATTACHED WATERPROOF LABEL WITH A WHITE BACKGROUND AND BLACK 1/4" HIGH LETTERS. THE LABELS SHALL BE AFFIXED ON EACH PIECE CONDUIT ABOVEGROUND INSIDE THE BUILDING. LABEL SPACING SHALL NOT EXCEED 10 FEET.
6. CONDUITS USED IN THE ATG SYSTEM TO CONVEY INTRINSICALLY SAFE WIRING SHALL BE LABELED AS INDICATED IN NOTE 5 ABOVE AND SHALL HAVE ADJACENT SIMILARLY CONSTRUCTED LABELS THAT READ: "INTRINSICALLY SAFE WIRING".
7. PROVIDE "HEAVY-WALLED RIGID HOT-DIP GALVANIZED" CONDUIT. RIGID NONMETALLIC CONDUIT (RNC) IS ALLOWED FOR UNDERGROUND RUNS IF CONDUIT IS BURIED AT A MINIMUM OF 2' WITH THE EXCEPTION OF THE LAST 2' OF THE UNDERGROUND RUN WHERE AHJ ALLOWS.

SCOPE OF WORK

ITEM	DESCRIPTION	DESIGN/ BUILD CTR
1	ATG WIREWAY	X
2	CONDUIT SYSTEM FROM ATG WIREWAY TO SENSOR JBOXES INCLUDING PULL ROPES	X
3	FEEDER INCLUDING CONDUIT AND WIRE FROM ELECTRICAL PANEL TO POWER CIRCUIT PROTECTOR	X
4	MOUNT EQUIPMENT: a. ATG CONSOLE b. ALARM BOXES c. ACKNOWLEDGE SWITCHES d. SENSORS e. POWER CIRCUIT PROTECTOR	X
5	HIGH LEVEL RELAY	X
6	CONDUIT SYSTEM BETWEEN ITEMS 4 AND 5 INCLUDING PULL ROPES EXCEPT ITEMS 7 AND 8	X
7	CONDUIT FROM ATG CONSOLE TO ATG WIREWAY	X
8	CONDUIT FROM ATG CONSOLE TO POWER CIRCUIT PROTECTOR	X
9	SENSOR CABLES	X
10	CONTROL WIRES/CABLES	X
11	TERMINATIONS EXCEPT AT ELECTRIC PANEL C/M	X
12	TERMINATIONS AT ELECTRIC PANEL C/M	X

Rev. #	Date	Description

Ryder LC 0173
2 BAY REMODEL FUEL SERVICE ISLAND
3711 CROSSROADS PARKWAY
FORT PIERCE, FLORIDA 34945

AUTOMATIC TANK GAUGING SYSTEM - AST

Ryder®

CORE STATES GROUP
1700 Industrial Drive, Suite B
Rogers, AR 72756
Phone (479) 986-4400
FAX (888) 393-8803

Job#:	RYD-25401
Scale:	AS shown
Date:	10-10-18
Drawn By:	BMZ
Checked By:	WLJ

Documents prepared by Core States Group may be used only for the specific project and specific use for which they are intended. Any extension of use to other projects, or use by any other party, without the expressed, written consent of Core States Group will be done at the user's own risk. If used in a way other than that specifically authorized, user shall hold Core States Group harmless from all claims and losses.

JOHN D. FERGUSON
No. 67173
STATE OF FLORIDA
PROFESSIONAL ENGINEER
10-10-18

ATG-2

CITY OF FORT PIERCE, FLORIDA
BUILDING DEPARTMENT
APPLICATION FOR BUILDING PERMIT

(772) 467-3718 FAX (772) 467-3849
building@city-ftpierce.com

PERMIT # 18-3638
FBC (2017) 6th Edition
PIN # 713170

Building Department Project Manager:

*Property Address 3711 Crossroads Parkway, Fort Pierce, FL 34945 *Date _____

Parcel ID# 2324-710-0016-000-6 (Located on your tax bill) *# of plans submitted 3 * # of CD's submitted 2

*Owner Name Ryder Truck Rental Inc *Owner Address PO Box 025719,Miami, FL 33102/11690 NW 105th Street, Miami, FL 33178 ATTN: Environmental Services

Phone # (305) 500 - 5076 Fax # (____) _____ - _____ Cell # (____) _____ - _____

Email Address Permitting@IEGroup.net/George_M_Luostari@ryder.com

***Required Information**

Type of permit _____ *Valuation $ 150,000.00

*Description of Work: Scope of work includes the installation of a replacement UL-2085 rated 20,000 gallon diesel fuel above ground tank, replacement of all underground piping, electrical, and monitoring conduits with overhead runs, and replacement of all product lines with overhead piping. The two (2) existing 12,000 gallon above ground storage tanks will be removed.

The project also includes the installation of one (1) additional DEF storage tank and two stand-alone DEF dispensers; the existing 500 gallon DEF tank will remain.

Architect: _____

Phone(____) _____ - _____ Fax (____) _____ - _____ Email Address _____

Engineer: Nisit Sapparkhao - Infinity Engineering Group, LLC.

Phone(813) 434 - 4770 Fax (____) _____ - _____ Email Address Permitting@IEGroup.net
Conrad.palumbo@iegroup.net

***CONTRACTOR/APPLICANT INFORMATION:**

City License # _____ State License # _____

Company Name TBD Qualifier TBD

Address _____ City/State _____ Zip _____

Phone # (____) _____ - _____ Fax # (____) _____ - _____ Cell # (____) _____ - _____

Email Address _____

Occupancy Comm Construction Type _____ # of Units _____ # of Stories _____

Sq. Ft. Conditioned Space 6,550 Total Sq. Ft. 8,560

I understand that no building may be occupied until a Certificate of Occupancy/Certificate of Completion has been issued after final inspection by the Building Department and full compliance with the building code, city ordinances, state statutes and other applicable rules and regulations have been satisfied. I am also verifying that all sets of plans submitted are identical.

Application is hereby made to obtain a permit to do the work and installations as indicated. I certify that no work or installation has commenced prior to the issuance of a permit and that all work will be performed to meet the standards of all laws regulating construction in this jurisdiction. I understand that a separate permit must be secured for electrical work, plumbing, signs, wells, pools, furnaces, boilers, heaters, tanks, and air conditioners etc.

Owner's Affidavit: I certify that all the foregoing information is accurate and that all work will be done in compliance with all applicable laws regulating construction and zoning.

Need Elec SUB

WARNING TO OWNER:
YOUR FAILURE TO RECORD A NOTICE OF COMMENCEMENT MAY RESULT IN YOUR PAYING TWICE FOR IMPROVEMENTS TO YOUR PROPERTY. A NOTICE OF COMMENCEMENT MUST BE RECORDED AND POSTED ON THE JOB SITE BEFORE THE FIRST INSPECTION.
IF YOU INTEND TO OBTAIN FINANCING, CONSULT WITH YOUR LENDER OR AN ATTORNEY BEFORE COMMENCING WORK OR RECORDING YOUR NOTICE OF COMMENCEMENT.

Must be signed by owner/Agent and applicant:

(Signature of contractor)

State of Florida, County of _____

Affirmed to and subscribed before me this _____

_____, 20____, by _____
personally known to me or who has produced
as identification. _____

Notary Signature: _____

Notary (print name) _____

(Signature of Owner or Agent (including contractor))

State of Florida, County of Miami-Dade

Affirmed to and subscribed before me this October 12

2018, by Robert Fatovic
personally known to me or who has produced
as identification. _____

Notary Signature: _____

PENNY THOMPSON
MY COMMISSION # FF 939302
EXPIRES: February 3, 2020
Bonded Thru Notary Public Underwriters

Notary (print name) PennyThompson

Construction documents must accompany this application. The Florida energy code submitted becomes an integral part of this plan and must pass final inspection. "Notice: In addition to the requirements of this permit, there may be additional restrictions applicable to this property that may be found in the public record of this county, and there may be additional permits required from other governmental entities such as waste management district, state agencies, or federal agencies. "SIGNATURE OF THE APPLICANT MUST BE NOTARIZED. If owner builder, applicant must sign in person. BUILDING PERMIT includes: Building, Electrical, Plumbing, Mechanical, and Sewer only. All other trades require separate applications.

Asbestos compliance: It is the owner's or operator's responsibility to comply with section 469.003, Florida Statutes, and to notify the Department of Environmental Protection of his or her intentions to remove asbestos, when applicable, in accordance with state and federal law.

FEE SIMPLE TITLEHOLDER, BONDING COMPANY AND MORTGAGE LENDER INFORMATION IS REQUIRED WHEN THE AGGREGATE VALUE (TOTAL COST OF ALL IMPROVEMENTS AND NOT JUST WORK AUTHORIZED BY THE INDIVIDUAL PERMIT) IS $2500 OR MORE (EXCEPT HVAC REPAIR/REPLACEMENT< $7500). PLEASE ADDRESS ALL ITEMS.

Fee Simple Titleholder's ☑ **Same as Owner**
Name (if other than owner): _____
Address: _____
City: _____ **State:** _____ **Zip:** _____

Bonding Company ☑ **Not Applicable**
Name: _____
Address: _____
City: _____ **State:** _____ **Zip:** _____

Mortgage Lender's ☑ **Not Applicable**
Name: _____
Address: _____
City: _____ **State:** _____ **Zip:** _____

OFFICE USE ONLY

Is the property located in a Special Flood Hazard Area (floodplain) per the current Flood Insurance Rate Map (FIRM)

☐ Yes ☒ No CF

Flood Zone: _____ Reviewed by: _____ Determination: _____

Permit Fee	$ 1875.00	Other	$	Plan Review Fee	$ 750.00
State Surcharge	$ 65.63	Other	$	Routing Fee	$ 45.00
Subcontractor	$ .00	Flood Review Fee	$	Other CR Fee	$ 39.75

$834.75

Total Amount Due at Issuance $ _____

Remarks _____

Active Code Violation ☐ Yes ☒ No
Case # _____
Case Type _____

Reviewed by _____ Date _____ Final Check _____ Date _____

City Commission Regular Meeting **11.c.**

Meeting Date: 02/19/2019

Re: 17th Street Drainage Improvements - FEMA Hazard Mitigation Grant Program - Project Number: 4283-67 Grant Agreement

Submitted For: John Andrews, City Engineer, Engineering

SUBJECT:

Approval and acceptance of FEMA Hazard Mitigation Grant agreement for the construction of the 17th Street (Orange Avenue to Avenue D) drainage improvement project in the amount of $856,198.

SUMMARY:

The City applied for a FEMA Hazard Mitigation Grant for the reconstruction of 17th Street between Orange Avenue and Avenue D. The City was awarded this grant receiving $856,198 of federal funds towards the estimated construction cost of $1,141,597.

RECOMMENDATION:

Engineering recommends approval of the proposed grant agreement.

ALTERNATIVES:

Reject grant agreement and delay construction.

RESPONSIBLE STAFF:

Engineering Department

COORDINATED WITH:

Holly Swift, FEMA - FL Division of Emergency Management

Fiscal Impact

Budgeted Y/N:	N
Fiscal Year:	N/A
Account:	403 4300 538 3490
Amount:	$1,141,597

FISCAL IMPACT:

Funding for this project shall be emcumbered from SMU Revenue Account No. 403-4300-538-3490, with FEMA federal reimbursement in the amount of $856,198.

Attachments

Grant Agreement

Form Review

Inbox	Reviewed By	Date
Finance Department		02/06/2019 09:32 AM
City Manager	Nick Mimms	02/12/2019 11:18 AM
Form Started By: John Andrews		Started On: 02/04/2019 03:54 PM
Final Approval Date: 02/12/2019		

THE SUNRISE CITY
FORT PIERCE
CITY ATTORNEY'S OFFICE Florida

Received
DEC 26 2018
City of Fort Pierce
City Manager's Office

TO : John R. Andrews, P.E., City Engineer

FROM : Benjamin Bryan, City Attorney BBB

RE : 17th Street Drainage Improvements – FEMA Hazard Mitigation Grant Program – Project Number: 4283-67 Review of Grant Agreement

DATE : December 26, 2018

The following Grant Agreement have been approved as to Legal Form and Correctness.

BB/mm

cc: Nicholas C. Mimms, P.E., City Manager

OK
12/26/18

RECEIVED
DEC 28 2018
CITY OF FORT PIERCE
ENGINEERING DEPARTMENT

THE SUNRISE CITY
FORT PIERCE
CITY ATTORNEY'S OFFICE Florida

CITY ATTORNEY USE ONLY	
Date Received:	
Assigned To:	
File:	
Due Date:	
Hours:	

Received
DEC 1 0 2018
City of Fort Pierce
City Manager's Office

REQUEST FOR LEGAL SERVICES

TO: BEN BRYAN JR., CITY ATTORNEY BJB

SUBMITTED BY: JOHN R. ANDREWS, P. E., CITY ENGINEER JRA

CITY MANAGER AUTHORIZATION: NICHOLAS C. MIMMS, P.E., CITY MANAGER NCM

RE: 17TH STREET DRAINAGE IMPROVEMENTS – FEMA HAZARD MITIGATION GRANT PROGRAM - PROJECT NUMBER: 4283-67 REVIEW OF GRANT AGREEMENT

DATE: DECEMBER 18, 2018

Service Required: (please circle or underline)

Review Documents	**Draft Document**	**Written Opinion Requested**
Attend Meetings	**Advise**	**Other:** _____

Upon review and/or "Approval as to Form and Correctness," the Department submitting the RLS is responsible for placement of any related item on a Commission or Board Agenda.

1. **Brief statement of the nature of the request or problem:** Review and approval of FEMA Grant Agreement for the 17th Street Improvement Project extending between Orange Avenue and Avenue D.

2. **Discussion of the implications and the possible impact if not apparent from preceding information:** This is a FEMA Hazard Mitigation Grant Program where the City of Fort Pierce is the Sub-Recipient receiving $856,198.00 of federal funds to improve the drainage characteristics of 17th Street.

3. **Time considerations and their significance:** Desire to be on the January 7, 2019 City Commission Agenda.

4. **Are City funds required? If so, list approvals obtained for expenditure of funds:** The City's Capital Improvement Project list identifies this project to provide matching funds for the federal grant.

5. **Factual background:** The City applied for this grant through the Hazard Mitigation Program and was awarded on July 9, 2018.

6. **List and/or attach all related documents and known authorities (e.g., statute, ordinance, resolution, administrative code, legal case, RFP, bidder's response, contract, lease, letter, memorandum, prior legal opinion, deed, etc.):** N/A

7. **Identify prior legal assistance on this or a related matter and the attorney who handled it:**

8. **If this is a request for review of a contract, provide the following:**

    a. **List of individuals who have read and approved the business terms and conditions of the contract and confirmed the ability to carry out the terms of the contract as they apply to the City:** Jack Andrews

    b. **Insurance requirements that differ from the City's template insurance terms:**

CITY ATTORNEY USE ONLY			
Routed for Review	**Date**	**Response Deadline**	**Response**

Agreement Number: H0108

Project Number: 4283-67-R

FEDERALLY-FUNDED SUBAWARD AND GRANT AGREEMENT

2 C.F.R. §200.92 states that a "subaward may be provided through any form of legal agreement, including an agreement that the pass-through entity considers a contract."

As defined by 2 C.F.R. §200.74, "pass-through entity" means "a non-Federal entity that provides a subaward to a Sub-Recipient to carry out part of a Federal program."

As defined by 2 C.F.R. §200.93, "Sub-Recipient" means "a non-Federal entity that receives a subaward from a pass-through entity to carry out part of a Federal program."

As defined by 2 C.F.R. §200.38, "Federal award" means "Federal financial assistance that a non-Federal entity receives directly from a Federal awarding agency or indirectly from a pass-through entity."

As defined by 2 C.F.R. §200.92, "subaward" means "an award provided by a pass-through entity to a Sub-Recipient for the Sub-Recipient to carry out part of a Federal award received by the pass-through entity."

The following information is provided pursuant to 2 C.F.R. §200.331(a)(1):

Sub-Recipient's name:	City of Fort Pierce
Sub-Recipient's unique entity identifier:	59-6000322
Federal Award Identification Number (FAIN):	FEMA-DR-4283-FL
Federal Award Date:	July 9, 2018
Subaward Period of Performance Start and End Date:	Upon Execution thru March 31, 2021
Amount of Federal Funds Obligated by this Agreement:	$856,198.00
Total Amount of Federal Funds Obligated to the Sub-Recipient by the pass-through entity to include this Agreement:	$856,198.00
Total Amount of the Federal Award committed to the Sub-Recipient by the pass-through entity	$856,198.00
Federal award project description (see FFATA):	City of Fort Pierce – Drainage Improvement Project
Name of Federal awarding agency:	Federal Emergency Management Agency
Name of pass-through entity:	FL Division of Emergency Management
Contact information for the pass-through entity:	Holly.swift@em.myflorida.com
Catalog of Federal Domestic Assistance (CFDA) Number and Name:	97.039 Hazard Mitigation Grant Program
Whether the award is R&D:	N/A
Indirect cost rate for the Federal award:	N/A

THIS AGREEMENT is entered into by the State of Florida, Division of Emergency Management, with headquarters in Tallahassee, Florida (hereinafter referred to as the "Division"), and the City of Fort Pierce, (hereinafter referred to as the "Sub-Recipient").

For the purposes of this Agreement, the Division serves as the pass-through entity for a Federal award, and the Sub-Recipient serves as the recipient of a subaward.

THIS AGREEMENT IS ENTERED INTO BASED ON THE FOLLOWING REPRESENTATIONS:

A. The Sub-Recipient represents that it is fully qualified and eligible to receive these grant funds to provide the services identified herein;

B. The State of Florida received these grant funds from the Federal government, and the Division has the authority to subgrant these funds to the Sub-Recipient upon the terms and conditions outlined below; and,

C. The Division has statutory authority to disburse the funds under this Agreement.

THEREFORE, the Division and the Sub-Recipient agree to the following:

(1) APPLICATION OF STATE LAW TO THIS AGREEMENT

2 C.F.R. §200.302 provides: "Each state must expend and account for the Federal award in accordance with state laws and procedures for expending and accounting for the state's own funds." Therefore, section 215.971, Florida Statutes, entitled "Agreements funded with federal or state assistance", applies to this Agreement.

(2) LAWS, RULES, REGULATIONS AND POLICIES

a. The Sub-Recipient's performance under this Agreement is subject to 2 C.F.R. Part 200, entitled "Uniform Administrative Requirements, Cost Principles, and Audit Requirements for Federal Awards."

b. As required by Section 215.971(1), Florida Statutes, this Agreement includes:

i. A provision specifying a scope of work that clearly establishes the tasks that the Sub-Recipient is required to perform.

ii. A provision dividing the agreement into quantifiable units of deliverables that must be received and accepted in writing by the Division before payment. Each deliverable must be directly related to the scope of work and specify the required minimum level of service to be performed and the criteria for evaluating the successful completion of each deliverable.

iii. A provision specifying the financial consequences that apply if the Sub-Recipient fails to perform the minimum level of service required by the agreement.

iv. A provision specifying that the Sub-Recipient may expend funds only for allowable costs resulting from obligations incurred during the specified agreement period.

v. A provision specifying that any balance of unobligated funds which has been advanced or paid must be refunded to the Division.

vi. A provision specifying that any funds paid in excess of the amount to which the Sub-Recipient is entitled under the terms and conditions of the agreement must be refunded to the Division.

c. In addition to the foregoing, the Sub-Recipient and the Division shall be governed by all applicable State and Federal laws, rules and regulations, including those identified in Attachment B. Any express reference in this Agreement to a particular statute, rule, or regulation in no way implies that no other statute, rule, or regulation applies.

(3) CONTACT

a. In accordance with section 215.971(2), Florida Statutes, the Division's Grant Manager shall be responsible for enforcing performance of this Agreement's terms and conditions and shall serve as the Division's liaison with the Sub-Recipient. As part of his/her duties, the Grant Manager for the Division shall:

i. Monitor and document Sub-Recipient performance; and,

ii. Review and document all deliverables for which the Sub-Recipient requests payment.

b. The Division's Grant Manager for this Agreement is:

Holly Swift, Project Manager
Division of Emergency Management
Bureau of Mitigation
2702 Directors Row
Orlando, Florida 32809-5631
Telephone: (850) 815-4570
Email: Holly.swift@em.myflorida.com

c. The name and address of the Representative of the Sub-Recipient responsible for the administration of this Agreement is:

John Andrews, II, P.E., City Engineer
City of Fort Pierce
100 North U.S. Highway 1
Ft. Pierce, Florida 34950
Telephone: (772) 467-3773
Email: jandrews@city-ftpierce.com

d. In the event that different representatives or addresses are designated by either party after execution of this Agreement, notice of the name, title and address of the new representative will be provided to the other party.

(4) TERMS AND CONDITIONS

This Agreement contains all the terms and conditions agreed upon by the parties.

(5) EXECUTION

This Agreement may be executed in any number of counterparts, any one of which may be taken as an original.

(6) MODIFICATION

Either party may request modification of the provisions of this Agreement. Changes which are agreed upon shall be valid only when in writing, signed by each of the parties, and attached to the original of this Agreement.

(7) SCOPE OF WORK.

The Sub-Recipient shall perform the work in accordance with the Budget and Scope of Work, Attachment A of this Agreement.

(8) PERIOD OF AGREEMENT.

This Agreement shall begin upon execution by both parties and shall end on **March 31, 2021**, unless terminated earlier in accordance with the provisions of Paragraph (17) of this Agreement. Consistent with the definition of "period of performance" contained in 2 C.F.R. §200.77, the term "period of agreement" refers to the time during which the Sub-Recipient "may incur new obligations to carry out the work authorized under" this Agreement. In accordance with 2 C.F.R. §200.309, the Sub-Recipient may receive reimbursement under this Agreement only for "allowable costs incurred during the period of performance." In accordance with section 215.971(1)(d), Florida Statutes, the Sub-Recipient may expend funds authorized by this Agreement "only for allowable costs resulting from obligations incurred during" .0the period of agreement.

(9) FUNDING

a. This is a cost-reimbursement Agreement, subject to the availability of funds.

b. The State of Florida's performance and obligation to pay under this Agreement is contingent upon an annual appropriation by the Legislature, and subject to any modification in accordance with either Chapter 216, Florida Statutes, or the Florida Constitution.

c. The Division will reimburse the Sub-Recipient only for allowable costs incurred by the Sub-Recipient in the successful completion of each deliverable. The maximum reimbursement amount for each deliverable is outlined in Attachment A of this Agreement ("Budget and Scope of Work"). The maximum reimbursement amount for the entirety of this Agreement is **$856,198.00.**

d. As required by 2 C.F.R. §200.415(a), any request for payment under this Agreement must include a certification, signed by an official who is authorized to legally bind the Sub-Recipient, which reads as follows: "By signing this report, I certify to the best of my knowledge and belief that the report is true, complete, and accurate, and the expenditures, disbursements and cash receipts are for the purposes and objectives set forth in the terms and conditions of the Federal award. I am aware that any

false, fictitious, or fraudulent information, or the omission of any material fact, may subject me to criminal, civil or administrative penalties for fraud, false statements, false claims or otherwise. (U.S. Code Title 18, Section 1001 and Title 31, Sections 3729-3730 and 3801-3812)."

e. The Division will review any request for reimbursement by comparing the documentation provided by the Sub-Recipient against a performance measure, outlined in Attachment A, that clearly delineates:

i. The required minimum acceptable level of service to be performed; and,

ii. The criteria for evaluating the successful completion of each deliverable.

f. The performance measure required by section 215.971(1)(b), Florida Statutes, remains consistent with the requirement for a "performance goal", which is defined in 2 C.F.R. §200.76 as "a target level of performance expressed as a tangible, measurable objective, against which actual achievement can be compared." It also remains consistent with the requirement, contained in 2 C.F.R. §200.301, that the Division and the Sub-Recipient "relate financial data to performance accomplishments of the Federal award."

g. If authorized by the Federal Awarding Agency, then the Division will reimburse the Sub-Recipient for overtime expenses in accordance with 2 C.F.R. §200.430 ("Compensation—personal services") and 2 C.F.R. §200.431 ("Compensation—fringe benefits"). If the Sub-Recipient seeks reimbursement for overtime expenses for periods when no work is performed due to vacation, holiday, illness, failure of the employer to provide sufficient work, or other similar cause (*see* 29 U.S.C. §207(e)(2)), then the Division will treat the expense as a fringe benefit. 2 C.F.R. §200.431(a) defines fringe benefits as "allowances and services provided by employers to their employees as compensation in addition to regular salaries and wages." Fringe benefits are allowable under this Agreement as long as the benefits are reasonable and are required by law, Sub-Recipient-employee agreement, or an established policy of the Sub-Recipient. 2 C.F.R. §200.431(b) provides that the cost of fringe benefits in the form of regular compensation paid to employees during periods of authorized absences from the job, such as for annual leave, family-related leave, sick leave, holidays, court leave, military leave, administrative leave, and other similar benefits, are allowable if all of the following criteria are met:

i. They are provided under established written leave policies;

ii. The costs are equitably allocated to all related activities, including Federal awards; and,

iii. The accounting basis (cash or accrual) selected for costing each type of leave is consistently followed by the non-Federal entity or specified grouping of employees.

h. If authorized by the Federal Awarding Agency, then the Division will reimburse the Sub-Recipient for travel expenses in accordance with 2 C.F.R. §200.474. As required by the Reference Guide for State Expenditures, reimbursement for travel must be in accordance with section 112.061, Florida Statutes, which includes submission of the claim on the approved state travel voucher. If the Sub-Recipient seeks reimbursement for travel costs that exceed the amounts stated in section 112.061(6)(b),

Florida Statutes ($6 for breakfast, $11 for lunch, and $19 for dinner), then the Sub-Recipient must provide documentation that:

i. The costs are reasonable and do not exceed charges normally allowed by the Sub-Recipient in its regular operations as a result of the Sub-Recipient's written travel policy; and,

ii. Participation of the individual in the travel is necessary to the Federal award.

i. The Division's grant manager, as required by section 215.971(2)(c), Florida Statutes, shall reconcile and verify all funds received against all funds expended during the grant agreement period and produce a final reconciliation report. The final report must identify any funds paid in excess of the expenditures incurred by the Sub-Recipient.

j. As defined by 2 C.F.R. §200.53, the term "improper payment" means or includes:

i. Any payment that should not have been made or that was made in an incorrect amount (including overpayments and underpayments) under statutory, contractual, administrative, or other legally applicable requirements; and,

ii. Any payment to an ineligible party, any payment for an ineligible good or service, any duplicate payment, any payment for a good or service not received (except for such payments where authorized by law), any payment that does not account for credit for applicable discounts, and any payment where insufficient or lack of documentation prevents a reviewer from discerning whether a payment was proper.

(10)RECORDS

a. As required by 2 C.F.R. §200.336, the Federal awarding agency, Inspectors General, the Comptroller General of the United States, and the Division, or any of their authorized representatives, shall enjoy the right of access to any documents, papers, or other records of the Sub-Recipient which are pertinent to the Federal award, in order to make audits, examinations, excerpts, and transcripts. The right of access also includes timely and reasonable access to the Sub-Recipient's personnel for the purpose of interview and discussion related to such documents. Finally, the right of access is not limited to the required retention period but lasts as long as the records are retained.

b. As required by 2 C.F.R. §200.331(a)(5), the Division, the Chief Inspector General of the State of Florida, the Florida Auditor General, or any of their authorized representatives, shall enjoy the right of access to any documents, financial statements, papers, or other records of the Sub-Recipient which are pertinent to this Agreement, in order to make audits, examinations, excerpts, and transcripts. The right of access also includes timely and reasonable access to the Sub-Recipient's personnel for the purpose of interview and discussion related to such documents.

c. As required by Florida Department of State's record retention requirements (Chapter 119, Florida Statutes) and by 2 C.F.R. §200.333, the Sub-Recipient shall retain sufficient records to show its compliance with the terms of this Agreement, as well as the compliance of all subcontractors or consultants paid from funds under this Agreement, for a period of five (5) fiscal years from the date of

completion of grant cycle or project. The following are the only exceptions to the five (5) year requirement:

i. If any litigation, claim, or audit is started before the expiration of the 5-year period, then the records must be retained until all litigation, claims, or audit findings involving the records have been resolved and final action taken.

ii. When the Division or the Sub-Recipient is notified in writing by the Federal awarding agency, cognizant agency for audit, oversight agency for audit, cognizant agency for indirect costs, or pass-through entity to extend the retention period.

iii. Records for real property and equipment acquired with Federal funds must be retained for 5 years after final disposition.

iv. When records are transferred to or maintained by the Federal awarding agency or pass-through entity, the 5-year retention requirement is not applicable to the Sub-Recipient.

v. Records for program income transactions after the period of performance. In some cases recipients must report program income after the period of performance. Where there is such a requirement, the retention period for the records pertaining to the earning of the program income starts from the end of the non-Federal entity's fiscal year in which the program income is earned.

vi. Indirect cost rate proposals and cost allocations plans. This paragraph applies to the following types of documents and their supporting records: indirect cost rate computations or proposals, cost allocation plans, and any similar accounting computations of the rate at which a particular group of costs is chargeable (such as computer usage chargeback rates or composite fringe benefit rates).

d. In accordance with 2 C.F.R. §200.334, the Federal awarding agency must request transfer of certain records to its custody from the Division or the Sub-Recipient when it determines that the records possess long-term retention value.

e. In accordance with 2 C.F.R. §200.335, the Division must always provide or accept paper versions of Agreement information to and from the Sub-Recipient upon request. If paper copies are submitted, then the Division must not require more than an original and two copies. When original records are electronic and cannot be altered, there is no need to create and retain paper copies. When original records are paper, electronic versions may be substituted through the use of duplication or other forms of electronic media provided that they are subject to periodic quality control reviews, provide reasonable safeguards against alteration, and remain readable.

f. As required by 2 C.F.R. §200.303, the Sub-Recipient shall take reasonable measures to safeguard protected personally identifiable information and other information the Federal awarding agency or the Division designates as sensitive or the Sub-Recipient considers sensitive consistent with applicable Federal, state, local, and tribal laws regarding privacy and obligations of confidentiality.

g. Florida's Government in the Sunshine Law (Section 286.011, Florida Statutes) provides the citizens of Florida with a right of access to governmental proceedings and mandates three,

basic requirements: (1) meetings of public boards or commissions must be open to the public; (2) reasonable notice of such meetings must be given; and, (3) minutes of the meetings must be taken and promptly recorded. The mere receipt of public funds by a private entity, standing alone, is insufficient to bring that entity within the ambit of the open government requirements. However, the Government in the Sunshine Law applies to private entities that provide services to governmental agencies and that act on behalf of those agencies in the agencies' performance of their public duties. If a public agency delegates the performance of its public purpose to a private entity, then, to the extent that private entity is performing that public purpose, the Government in the Sunshine Law applies. For example, if a volunteer fire department provides firefighting services to a governmental entity and uses facilities and equipment purchased with public funds, then the Government in the Sunshine Law applies to board of directors for that volunteer fire department. Thus, to the extent that the Government in the Sunshine Law applies to the Sub-Recipient based upon the funds provided under this Agreement, the meetings of the Sub-Recipient's governing board or the meetings of any subcommittee making recommendations to the governing board may be subject to open government requirements. These meetings shall be publicly noticed, open to the public, and the minutes of all the meetings shall be public records, available to the public in accordance with Chapter 119, Florida Statutes.

h. Florida's Public Records Law provides a right of access to the records of the state and local governments as well as to private entities acting on their behalf. Unless specifically exempted from disclosure by the Legislature, all materials made or received by a governmental agency (or a private entity acting on behalf of such an agency) in conjunction with official business which are used to perpetuate, communicate, or formalize knowledge qualify as public records subject to public inspection. The mere receipt of public funds by a private entity, standing alone, is insufficient to bring that entity within the ambit of the public record requirements. However, when a public entity delegates a public function to a private entity, the records generated by the private entity's performance of that duty become public records. Thus, the nature and scope of the services provided by a private entity determine whether that entity is acting on behalf of a public agency and is therefore subject to the requirements of Florida's Public Records Law.

i. The Sub-Recipient shall maintain all records for the Sub-Recipient and for all subcontractors or consultants to be paid from funds provided under this Agreement, including documentation of all program costs, in a form sufficient to determine compliance with the requirements and objectives of the Budget and Scope of Work - Attachment A - and all other applicable laws and regulations.

(11)AUDITS

a. The Sub-Recipient shall comply with the audit requirements contained in 2 C.F.R. Part 200, Subpart F.

b. In accounting for the receipt and expenditure of funds under this Agreement, the Sub-Recipient shall follow Generally Accepted Accounting Principles ("GAAP"). As defined by 2 C.F.R.

§200.49, GAAP "has the meaning specified in accounting standards issued by the Government Accounting Standards Board (GASB) and the Financial Accounting Standards Board (FASB)."

c. When conducting an audit of the Sub-Recipient's performance under this Agreement, the Division shall use Generally Accepted Government Auditing Standards ("GAGAS"). As defined by 2 C.F.R. §200.50, GAGAS, "also known as the Yellow Book, means generally accepted government auditing standards issued by the Comptroller General of the United States, which are applicable to financial audits."

d. If an audit shows that all or any portion of the funds disbursed were not spent in accordance with the conditions of this Agreement, the Sub-Recipient shall be held liable for reimbursement to the Division of all funds not spent in accordance with these applicable regulations and Agreement provisions within thirty days after the Division has notified the Sub-Recipient of such non-compliance.

e. The Sub-Recipient shall have all audits completed by an independent auditor, which is defined in section 215.97(2)(h), Florida Statutes, as "an independent certified public accountant licensed under chapter 473." The independent auditor shall state that the audit complied with the applicable provisions noted above. The audit must be received by the Division no later than nine months from the end of the Sub-Recipient's fiscal year.

f. The Sub-Recipient shall send copies of reporting packages for audits conducted in accordance with 2 C.F.R. Part 200, by or on behalf of the Sub-Recipient, to the Division at the following address:

DEMSingle_Audit@em.myflorida.com

OR

Office of the Inspector General

2555 Shumard Oak Boulevard

Tallahassee, Florida 32399-2100

g. The Sub-Recipient shall send the Single Audit reporting package and Form SF-SAC to the Federal Audit Clearinghouse by submission online at:

http://harvester.census.gov/fac/collect/ddeindex.html

h. The Sub-Recipient shall send any management letter issued by the auditor to the Division at the following address:

DEMSingle_Audit@em.myflorida.com

OR

Office of the Inspector General

2555 Shumard Oak Boulevard

Tallahassee, Florida 32399-2100

(12)REPORTS

a. Consistent with 2 C.F.R. §200.328, the Sub-Recipient shall provide the Division with quarterly reports and a close-out report. These reports shall include the current status and progress by the Sub-Recipient and all subcontractors in completing the work described in the Scope of Work and the expenditure of funds under this Agreement, in addition to any other information requested by the Division.

b. Quarterly reports are due to the Division no later than 15 days after the end of each quarter of the program year and shall be sent each quarter until submission of the administrative close-out report. The ending dates for each quarter of the program year are March 31, June 30, September 30 and December 31.

c. The close-out report is due 60 days after termination of this Agreement or 60 days after completion of the activities contained in this Agreement, whichever first occurs.

d. If all required reports and copies are not sent to the Division or are not completed in a manner acceptable to the Division, then the Division may withhold further payments until they are completed or may take other action as stated in Paragraph (16) REMEDIES. "Acceptable to the Division" means that the work product was completed in accordance with the Budget and Scope of Work.

e. The Sub-Recipient shall provide additional program updates or information that may be required by the Division.

f. The Sub-Recipient shall provide additional reports and information identified in Attachment F.

(13)MONITORING.

a. The Sub-Recipient shall monitor its performance under this Agreement, as well as that of its subcontractors and/or consultants who are paid from funds provided under this Agreement, to ensure that time schedules are being met, the Schedule of Deliverables and Scope of Work are being accomplished within the specified time periods, and other performance goals are being achieved. A review shall be done for each function or activity in Attachment A to this Agreement, and reported in the quarterly report.

b. In addition to reviews of audits, monitoring procedures may include, but not be limited to, on-site visits by Division staff, limited scope audits, and/or other procedures. The Sub-Recipient agrees to comply and cooperate with any monitoring procedures/processes deemed appropriate by the Division. In the event that the Division determines that a limited scope audit of the Sub-Recipient is appropriate, the Sub-Recipient agrees to comply with any additional instructions provided by the Division to the Sub-Recipient regarding such audit. The Sub-Recipient further agrees to comply and cooperate with any inspections, reviews, investigations or audits deemed necessary by the Florida Chief Financial Officer or Auditor General. In addition, the Division will monitor the performance and financial management by the Sub-Recipient throughout the contract term to ensure timely completion of all tasks.

(14)LIABILITY

a. Unless Sub-Recipient is a State agency or subdivision, as defined in section 768.28(2), Florida Statutes, the Sub-Recipient is solely responsible to parties it deals with in carrying out the terms of this Agreement; as authorized by section 768.28(19), Florida Statutes, Sub-Recipient shall hold the Division harmless against all claims of whatever nature by third parties arising from the work performance under this Agreement. For purposes of this Agreement, Sub-Recipient agrees that it is not an employee or agent of the Division, but is an independent contractor.

b. As required by section 768.28(19), Florida Statutes, any Sub-Recipient which is a state agency or subdivision, as defined in section 768.28(2), Florida Statutes, agrees to be fully responsible for its negligent or tortious acts or omissions which result in claims or suits against the Division, and agrees to be liable for any damages proximately caused by the acts or omissions to the extent set forth in Section 768.28, Florida Statutes. Nothing herein is intended to serve as a waiver of sovereign immunity by any Sub-Recipient to which sovereign immunity applies. Nothing herein shall be construed as consent by a state agency or subdivision of the State of Florida to be sued by third parties in any matter arising out of any contract.

(15)DEFAULT.

If any of the following events occur ("Events of Default"), all obligations on the part of the Division to make further payment of funds shall terminate and the Division has the option to exercise any of its remedies set forth in Paragraph (16); however, the Division may make payments or partial payments after any Events of Default without waiving the right to exercise such remedies, and without becoming liable to make any further payment if:

a. Any warranty or representation made by the Sub-Recipient in this Agreement or any previous agreement with the Division is or becomes false or misleading in any respect, or if the Sub-Recipient fails to keep or perform any of the obligations, terms or covenants in this Agreement or any previous agreement with the Division and has not cured them in timely fashion, or is unable or unwilling to meet its obligations under this Agreement;

b. Material adverse changes occur in the financial condition of the Sub-Recipient at any time during the term of this Agreement, and the Sub-Recipient fails to cure this adverse change within thirty days from the date written notice is sent by the Division;

c. Any reports required by this Agreement have not been submitted to the Division or have been submitted with incorrect, incomplete or insufficient information; or,

d. The Sub-Recipient has failed to perform and complete on time any of its obligations under this Agreement.

(16)REMEDIES.

If an Event of Default occurs, then the Division shall, after thirty calendar days written notice to the Sub-Recipient and upon the Sub-Recipient's failure to cure within those thirty days, exercise any one or more of the following remedies, either concurrently or consecutively:

a. Terminate this Agreement, provided that the Sub-Recipient is given at least thirty days prior written notice of the termination. The notice shall be effective when placed in the United States, first class mail, postage prepaid, by registered or certified mail-return receipt requested, to the address in paragraph (3) herein;

b. Begin an appropriate legal or equitable action to enforce performance of this Agreement;

c. Withhold or suspend payment of all or any part of a request for payment;

d. Require that the Sub-Recipient refund to the Division any monies used for ineligible purposes under the laws, rules and regulations governing the use of these funds.

e. Exercise any corrective or remedial actions, to include but not be limited to:

i. Request additional information from the Sub-Recipient to determine the reasons for or the extent of non-compliance or lack of performance,

ii. Issue a written warning to advise that more serious measures may be taken if the situation is not corrected,

iii. Advise the Sub-Recipient to suspend, discontinue or refrain from incurring costs for any activities in question or

iv. Require the Sub-Recipient to reimburse the Division for the amount of costs incurred for any items determined to be ineligible;

f. Exercise any other rights or remedies which may be available under law.

Pursuing any of the above remedies will not stop the Division from pursuing any other remedies in this Agreement or provided at law or in equity. If the Division waives any right or remedy in this Agreement or fails to insist on strict performance by the Sub-Recipient, it will not affect, extend or waive any other right or remedy of the Division, or affect the later exercise of the same right or remedy by the Division for any other default by the Sub-Recipient.

(17)TERMINATION.

a. The Division may terminate this Agreement for cause after thirty days written notice. Cause can include misuse of funds, fraud, lack of compliance with applicable rules, laws and regulations, failure to perform on time, and refusal by the Sub-Recipient to permit public access to any document, paper, letter, or other material subject to disclosure under Chapter 119, Florida Statutes, as amended.

b. The Division may terminate this Agreement for convenience or when it determines, in its sole discretion that continuing the Agreement would not produce beneficial results in line with the further expenditure of funds, by providing the Sub-Recipient with thirty calendar day's prior written notice.

c. The parties may agree to terminate this Agreement for their mutual convenience through a written amendment of this Agreement. The amendment will state the effective date of the termination and the procedures for proper closeout of the Agreement.

d. In the event that this Agreement is terminated, the Sub-Recipient will not incur new obligations for the terminated portion of the Agreement after the Sub-Recipient has received the

notification of termination. The Sub-Recipient will cancel as many outstanding obligations as possible. Costs incurred after receipt of the termination notice will be disallowed. The Sub-Recipient shall not be relieved of liability to the Division because of any breach of Agreement by the Sub-Recipient. The Division may, to the extent authorized by law, withhold payments to the Sub-Recipient for the purpose of set-off until the exact amount of damages due the Division from the Sub-Recipient is determined.

(18)PROCUREMENT

a. The Sub-Recipient shall ensure that any procurement involving funds authorized by the Agreement complies with all applicable federal and state laws and regulations, to include 2 C.F.R. §§200.318 through 200.326 as well as Appendix II to 2 C.F.R. Part 200 (entitled "Contract Provisions for Non-Federal Entity Contracts Under Federal Awards").

b. As required by 2 C.F.R. §200.318(b), the Sub-Recipient shall "maintain records sufficient to detail the history of procurement. These records will include, but are not necessarily limited to the following: rationale for the method of procurement, selection of contract type, contractor selection or rejection, and the basis for the contract price."

c. As required by 2 C.F.R. §200.318(i), the Sub-Recipient shall "maintain oversight to ensure that contractors perform in accordance with the terms, conditions, and specifications of their contracts or purchase orders." In order to demonstrate compliance with this requirement, the Sub-Recipient shall document, in its quarterly report to the Division, the progress of any and all subcontractors performing work under this Agreement.

d. Except for procurements by micro-purchases pursuant to 2 C.F.R. §200.320(a) or procurements by small purchase procedures pursuant to 2 C.F.R. §200.320(b), if the Sub-Recipient chooses to subcontract any of the work required under this Agreement, then the Sub-Recipient shall forward to the Division a copy of any solicitation (whether competitive or non-competitive) at least fifteen (15) days prior to the publication or communication of the solicitation. The Division shall review the solicitation and provide comments, if any, to the Sub-Recipient within three (3) business days. Consistent with 2 C.F.R. §200.324, the Division will review the solicitation for compliance with the procurement standards outlined in 2 C.F.R. §§200.318 through 200.326 as well as Appendix II to 2 C.F.R. Part 200. Consistent with 2 C.F.R. §200.318(k), the Division will not substitute its judgment for that of the Sub-Recipient. While the Sub-Recipient does not need the approval of the Division in order to publish a competitive solicitation, this review may allow the Division to identify deficiencies in the vendor requirements or in the commodity or service specifications. The Division's review and comments shall not constitute an approval of the solicitation. Regardless of the Division's review, the Sub-Recipient remains bound by all applicable laws, regulations, and agreement terms. If during its review the Division identifies any deficiencies, then the Division shall communicate those deficiencies to the Sub-Recipient as quickly as possible within the three (3) business day window outlined above. If the Sub-Recipient publishes a competitive solicitation after receiving comments from the Division that the solicitation is deficient, then the Division may:

i. Terminate this Agreement in accordance with the provisions outlined in paragraph (17) above; and,

ii. Refuse to reimburse the Sub-Recipient for any costs associated with that solicitation.

e. Except for procurements by micro-purchases pursuant to 2 C.F.R. §200.320(a) or procurements by small purchase procedures pursuant to 2 C.F.R. §200.320(b), if the Sub-Recipient chooses to subcontract any of the work required under this Agreement, then the Sub-Recipient shall forward to the Division a copy of any contemplated contract prior to contract execution. The Division shall review the unexecuted contract and provide comments, if any, to the Sub-Recipient within three (3) business days. Consistent with 2 C.F.R. §200.324, the Division will review the unexecuted contract for compliance with the procurement standards outlined in 2 C.F.R. §§200.318 through 200.326 as well as Appendix II to 2 C.F.R. Part 200. Consistent with 2 C.F.R. §200.318(k), the Division will not substitute its judgment for that of the Sub-Recipient. While the Sub-Recipient does not need the approval of the Division in order to execute a subcontract, this review may allow the Division to identify deficiencies in the terms and conditions of the subcontract as well as deficiencies in the procurement process that led to the subcontract. The Division's review and comments shall not constitute an approval of the subcontract. Regardless of the Division's review, the Sub-Recipient remains bound by all applicable laws, regulations, and agreement terms. If during its review the Division identifies any deficiencies, then the Division shall communicate those deficiencies to the Sub-Recipient as quickly as possible within the three (3) business day window outlined above. If the Sub-Recipient executes a subcontract after receiving a communication from the Division that the subcontract is non-compliant, then the Division may:

i. Terminate this Agreement in accordance with the provisions outlined in paragraph (17) above; and,

ii. Refuse to reimburse the Sub-Recipient for any costs associated with that subcontract.

f. The Sub-Recipient agrees to include in the subcontract that (i) the subcontractor is bound by the terms of this Agreement, (ii) the subcontractor is bound by all applicable state and federal laws and regulations, and (iii) the subcontractor shall hold the Division and Sub-Recipient harmless against all claims of whatever nature arising out of the subcontractor's performance of work under this Agreement, to the extent allowed and required by law.

g. As required by 2 C.F.R. §200.318(c)(1), the Sub-Recipient shall "maintain written standards of conduct covering conflicts of interest and governing the actions of its employees engaged in the selection, award and administration of contracts."

h. As required by 2 C.F.R. §200.319(a), the Sub-Recipient shall conduct any procurement under this agreement "in a manner providing full and open competition." Accordingly, the Sub-Recipient shall not:

i. Place unreasonable requirements on firms in order for them to qualify to do business;

ii. Require unnecessary experience or excessive bonding;

iii. Use noncompetitive pricing practices between firms or between affiliated companies;

iv. Execute noncompetitive contracts to consultants that are on retainer contracts;

v. Authorize, condone, or ignore organizational conflicts of interest;

vi. Specify only a brand name product without allowing vendors to offer an equivalent;

vii. Specify a brand name product instead of describing the performance, specifications, or other relevant requirements that pertain to the commodity or service solicited by the procurement;

viii. Engage in any arbitrary action during the procurement process; or,

ix. Allow a vendor to bid on a contract if that bidder was involved with developing or drafting the specifications, requirements, statement of work, invitation to bid, or request for proposals.

i. "[E]xcept in those cases where applicable Federal statutes expressly mandate or encourage" otherwise, the Sub-Recipient, as required by 2 C.F.R. §200.319(b), shall not use a geographic preference when procuring commodities or services under this Agreement.

j. The Sub-Recipient shall conduct any procurement involving invitations to bid (i.e. sealed bids) in accordance with 2 C.F.R. §200.320(c) as well as section 287.057(1)(a), Florida Statutes.

k. The Sub-Recipient shall conduct any procurement involving requests for proposals (i.e. competitive proposals) in accordance with 2 C.F.R. §200.320(d) as well as section 287.057(1)(b), Florida Statutes.

l. For each subcontract, the Sub-Recipient shall provide a written statement to the Division as to whether that subcontractor is a minority business enterprise, as defined in Section 288.703, Florida Statutes. Additionally, the Sub-Recipient shall comply with the requirements of 2 C.F.R. §200.321 ("Contracting with small and minority businesses, women's business enterprises, and labor surplus area firms").

(19)ATTACHMENTS

a. All attachments to this Agreement are incorporated as if set out fully.

b. In the event of any inconsistencies or conflict between the language of this Agreement and the attachments, the language of the attachments shall control, but only to the extent of the conflict or inconsistency.

c. This Agreement has the following attachments:

i. Exhibit 1 - Funding Sources
ii. Attachment A – Budget and Scope of Work
iii. Attachment B – Program Statutes and Regulations
iv. Attachment C – Statement of Assurances
v. Attachment D – Request for Advance or Reimbursement
vi. Attachment E – Justification of Advance Payment
vii. Attachment F – Quarterly Report Form
viii. Attachment G – Warranties and Representations
ix. Attachment H – Certification Regarding Debarment
x. Attachment I – Federal Funding Accountability and Transparency Act
xi. Attachment J – Mandatory Contract Provisions

(20)PAYMENTS

a. Any advance payment under this Agreement is subject to 2 C.F.R. §200.305 and, as applicable, section 216.181(16), Florida Statutes. All advances are required to be held in an interest-bearing account. If an advance payment is requested, the budget data on which the request is based and a justification statement shall be included in this Agreement as Attachment E. Attachment E will specify the amount of advance payment needed and provide an explanation of the necessity for and proposed use of these funds. No advance shall be accepted for processing if a reimbursement has been paid prior to the submittal of a request for advanced payment. After the initial advance, if any, payment shall be made on a reimbursement basis as needed.

b. Invoices shall be submitted at least quarterly and shall include the supporting documentation for all costs of the project or services. The final invoice shall be submitted within sixty (60) days after the expiration date of the agreement. An explanation of any circumstances prohibiting the submittal of quarterly invoices shall be submitted to the Division grant manager as part of the Sub-Recipient's quarterly reporting as referenced in Paragraph (12) of this Agreement.

c. If the necessary funds are not available to fund this Agreement as a result of action by the United States Congress, the federal Office of Management and Budgeting, the State Chief Financial Officer or under subparagraph (9)b. of this Agreement, all obligations on the part of the Division to make any further payment of funds shall terminate, and the Sub-Recipient shall submit its closeout report within thirty days of receiving notice from the Division.

(21)REPAYMENTS

a. All refunds or repayments due to the Division under this Agreement are to be made payable to the order of "Division of Emergency Management", and mailed directly to the following address:

Division of Emergency Management
Cashier
2555 Shumard Oak Boulevard
Tallahassee FL 32399-2100

b. In accordance with Section 215.34(2), Florida Statutes, if a check or other draft is returned to the Division for collection, Sub-Recipient shall pay the Division a service fee of $15.00 or 5% of the face amount of the returned check or draft, whichever is greater.

(22)MANDATED CONDITIONS

a. The validity of this Agreement is subject to the truth and accuracy of all the information, representations, and materials submitted or provided by the Sub-Recipient in this Agreement, in any later submission or response to a Division request, or in any submission or response to fulfill the requirements of this Agreement. All of said information, representations, and materials are incorporated by reference. The inaccuracy of the submissions or any material changes shall, at the option of the Division and with thirty days written notice to the Sub-Recipient, cause the termination of this Agreement and the release of the Division from all its obligations to the Sub-Recipient.

b. This Agreement shall be construed under the laws of the State of Florida, and venue for any actions arising out of this Agreement shall be in the Circuit Court of Leon County. If any provision of this Agreement is in conflict with any applicable statute or rule, or is unenforceable, then the provision shall be null and void to the extent of the conflict, and shall be severable, but shall not invalidate any other provision of this Agreement.

c. Any power of approval or disapproval granted to the Division under the terms of this Agreement shall survive the term of this Agreement.

d. The Sub-Recipient agrees to comply with the Americans With Disabilities Act (Public Law 101-336, 42 U.S.C. Section 12101 et seq.), which prohibits discrimination by public and private entities on the basis of disability in employment, public accommodations, transportation, State and local government services, and telecommunications.

e. Those who have been placed on the convicted vendor list following a conviction for a public entity crime or on the discriminatory vendor list may not submit a bid on a contract to provide any goods or services to a public entity, may not submit a bid on a contract with a public entity for the construction or repair of a public building or public work, may not submit bids on leases of real property to a public entity, may not be awarded or perform work as a contractor, supplier, subcontractor, or consultant under a contract with a public entity, and may not transact business with any public entity in

excess of $25,000.00 for a period of 36 months from the date of being placed on the convicted vendor list or on the discriminatory vendor list.

f. Any Sub-Recipient which is not a local government or state agency, and which receives funds under this Agreement from the federal government, certifies, to the best of its knowledge and belief, that it and its principals:

i. Are not presently debarred, suspended, proposed for debarment, declared ineligible, or voluntarily excluded from covered transactions by a federal department or agency;

ii. Have not, within a five-year period preceding this proposal been convicted of or had a civil judgment rendered against them for fraud or a criminal offense in connection with obtaining, attempting to obtain, or performing a public (federal, state or local) transaction or contract under public transaction; violation of federal or state antitrust statutes or commission of embezzlement, theft, forgery, bribery, falsification or destruction of records, making false statements, or receiving stolen property;

iii. Are not presently indicted or otherwise criminally or civilly charged by a governmental entity (federal, state or local) with commission of any offenses enumerated in paragraph (22) f. ii. of this certification; and,

iv. Have not within a five-year period preceding this Agreement had one or more public transactions (federal, state or local) terminated for cause or default.

g. If the Sub-Recipient is unable to certify to any of the statements in this certification, then the Sub-Recipient shall attach an explanation to this Agreement.

h. **In addition, the Sub-Recipient shall send to the Division (by email or by facsimile transmission) the completed "Certification Regarding Debarment, Suspension, Ineligibility And Voluntary Exclusion" (Attachment H) for each intended subcontractor which Sub-Recipient plans to fund under this Agreement. The form must be received by the Division before the Sub-Recipient enters into a contract with any subcontractor.**

i. The Division reserves the right to unilaterally cancel this Agreement if the Sub-Recipient refuses to allow public access to all documents, papers, letters or other material subject to the provisions of Chapter 119, Florida Statutes, which the Sub-Recipient created or received under this Agreement.

j. If the Sub-Recipient is allowed to temporarily invest any advances of funds under this Agreement, any interest income shall either be returned to the Division or be applied against the Division's obligation to pay the contract amount.

k. The State of Florida will not intentionally award publicly-funded contracts to any contractor who knowingly employs unauthorized alien workers, constituting a violation of the employment provisions contained in 8 U.S.C. Section 1324a(e) [Section 274A(e) of the Immigration and Nationality Act ("INA")]. The Division shall consider the employment by any contractor of unauthorized aliens a violation of Section 274A(e) of the INA. Such violation by the Sub-Recipient of the employment provisions

contained in Section 274A(e) of the INA shall be grounds for unilateral cancellation of this Agreement by the Division.

l. All unmanufactured and manufactured articles, materials and supplies which are acquired for public use under this Agreement must have been produced in the United States as required under 41 U.S.C. 10a, unless it would not be in the public interest or unreasonable in cost.

(23)LOBBYING PROHIBITION

a. 2 C.F.R. §200.450 prohibits reimbursement for costs associated with certain lobbying activities.

b. Section 216.347, Florida Statutes, prohibits "any disbursement of grants and aids appropriations pursuant to a contract or grant to any person or organization unless the terms of the grant or contract prohibit the expenditure of funds for the purpose of lobbying the Legislature, the judicial branch, or a state agency."

c. No funds or other resources received from the Division under this Agreement may be used directly or indirectly to influence legislation or any other official action by the Florida Legislature or any state agency.

d. The Sub-Recipient certifies, by its signature to this Agreement, that to the best of his or her knowledge and belief:

i. No Federal appropriated funds have been paid or will be paid, by or on behalf of the Sub-Recipient, to any person for influencing or attempting to influence an officer or employee of any agency, a Member of Congress, an officer or employee of Congress, or an employee of a Member of Congress in connection with the awarding of any Federal contract, the making of any Federal grant, the making of any Federal loan, the entering into of any cooperative agreement, and the extension, continuation, renewal, amendment or modification of any Federal contract, grant, loan or cooperative agreement.

ii. If any funds other than Federal appropriated funds have been paid or will be paid to any person for influencing or attempting to influence an officer or employee of any agency, a Member of Congress, an officer or employee of Congress, or an employee of a Member of Congress in connection with this Federal contract, grant, loan or cooperative agreement, the Sub-Recipient shall complete and submit Standard Form-LLL, "Disclosure of Lobbying Activities."

iii. The Sub-Recipient shall require that this certification be included in the award documents for all subawards (including subcontracts, subgrants, and contracts under grants, loans, and cooperative agreements) and that all Sub-Recipients shall certify and disclose.

iv. This certification is a material representation of fact upon which reliance was placed when this transaction was made or entered into. Submission of this certification is a prerequisite for making or entering into this transaction imposed by Section 1352, Title 31, U.S. Code. Any person who fails to file the required certification shall be subject to a civil penalty of not less than $10,000 and not more than $100,000 for each such failure.

(24)COPYRIGHT, PATENT AND TRADEMARK

EXCEPT AS PROVIDED BELOW, ANY AND ALL PATENT RIGHTS ACCRUING UNDER OR IN CONNECTION WITH THE PERFORMANCE OF THIS AGREEMENT ARE HEREBY RESERVED TO THE STATE OF FLORIDA; AND, ANY AND ALL COPYRIGHTS ACCRUING UNDER OR IN CONNECTION WITH THE PERFORMANCE OF THIS AGREEMENT ARE HEREBY TRANSFERRED BY THE SUB-RECIPIENT TO THE STATE OF FLORIDA.

a. If the Sub-Recipient has a pre-existing patent or copyright, the Sub-Recipient shall retain all rights and entitlements to that pre-existing patent or copyright unless the Agreement provides otherwise.

b. If any discovery or invention is developed in the course of or as a result of work or services performed under this Agreement, or in any way connected with it, the Sub-Recipient shall refer the discovery or invention to the Division for a determination whether the State of Florida will seek patent protection in its name. Any patent rights accruing under or in connection with the performance of this Agreement are reserved to the State of Florida. If any books, manuals, films, or other copyrightable material are produced, the Sub-Recipient shall notify the Division. Any copyrights accruing under or in connection with the performance under this Agreement are transferred by the Sub-Recipient to the State of Florida.

c. Within thirty days of execution of this Agreement, the Sub-Recipient shall disclose all intellectual properties relating to the performance of this Agreement which he or she knows or should know could give rise to a patent or copyright. The Sub-Recipient shall retain all rights and entitlements to any pre-existing intellectual property which is disclosed. Failure to disclose will indicate that no such property exists. The Division shall then, under Paragraph (24) b., have the right to all patents and copyrights which accrue during performance of the Agreement.

d. If the Sub-Recipient qualifies as a state university under Florida law, then, pursuant to section 1004.23, Florida Statutes, any invention conceived exclusively by the employees of the Sub-Recipient shall become the sole property of the Sub-Recipient. In the case of joint inventions, that is inventions made jointly by one or more employees of both parties hereto, each party shall have an equal, undivided interest in and to such joint inventions. The Division shall retain a perpetual, irrevocable, fully-paid, nonexclusive license, for its use and the use of its contractors of any resulting patented, copyrighted or trademarked work products, developed solely by the Sub-Recipient, under this Agreement, for Florida government purposes.

(25)LEGAL AUTHORIZATION.

The Sub-Recipient certifies that it has the legal authority to receive the funds under this Agreement and that its governing body has authorized the execution and acceptance of this Agreement. The Sub-Recipient also certifies that the undersigned person has the authority to legally execute and bind Sub-Recipient to the terms of this Agreement.

(26)EQUAL OPPORTUNITY EMPLOYMENT

a. In accordance with 41 C.F.R. §60-1.4(b), the Sub-Recipient hereby agrees that it will incorporate or cause to be incorporated into any contract for construction work, or modification thereof, as defined in the regulations of the Secretary of Labor at 41 CFR Chapter 60, which is paid for in whole or in part with funds obtained from the Federal Government or borrowed on the credit of the Federal Government pursuant to a grant, contract, loan insurance, or guarantee, or undertaken pursuant to any Federal program involving such grant, contract, loan, insurance, or guarantee, the following equal opportunity clause:

During the performance of this contract, the contractor agrees as follows:

i. The contractor will not discriminate against any employee or applicant for employment because of race, color, religion, sex, or national origin. The contractor will take affirmative action to ensure that applicants are employed, and that employees are treated during employment without regard to their race, color, religion, sex, or national origin. Such action shall include, but not be limited to the following: employment, upgrading, demotion, or transfer; recruitment or recruitment advertising; layoff or termination; rates of pay or other forms of compensation; and selection for training, including apprenticeship. The contractor agrees to post in conspicuous places, available to employees and applicants for employment, notices to be provided setting forth the provisions of this nondiscrimination clause.

ii. The contractor will, in all solicitations or advertisements for employees placed by or on behalf of the contractor, state that all qualified applicants will receive considerations for employment without regard to race, color, religion, sex, or national origin.

iii. The contractor will send to each labor union or representative of workers with which he has a collective bargaining agreement or other contract or understanding, a notice to be provided advising the said labor union or workers' representatives of the contractor's commitments under this section, and shall post copies of the notice in conspicuous places available to employees and applicants for employment.

iv. The contractor will comply with all provisions of Executive Order 11246 of September 24, 1965, and of the rules, regulations, and relevant orders of the Secretary of Labor.

v. The contractor will furnish all information and reports required by Executive Order 11246 of September 24, 1965, and by rules, regulations, and orders of the Secretary of Labor, or pursuant thereto, and will permit access to his books, records, and accounts by the administering agency and the Secretary of Labor for purposes of investigation to ascertain compliance with such rules, regulations, and orders.

vi. In the event of the contractor's noncompliance with the nondiscrimination clauses of this contract or with any of the said rules, regulations, or orders, this contract may be canceled, terminated, or suspended in whole or in part and the contractor may be declared

ineligible for further Government contracts or federally assisted construction contracts in accordance with procedures authorized in Executive Order 11246 of September 24, 1965, and such other sanctions may be imposed and remedies invoked as provided in Executive Order 11246 of September 24, 1965, or by rule, regulation, or order of the Secretary of Labor, or as otherwise provided by law.

vii. The contractor will include the portion of the sentence immediately preceding paragraph (1) and the provisions of paragraphs (1) through (7) in every subcontract or purchase order unless exempted by rules, regulations, or orders of the Secretary of Labor issued pursuant to section 204 of Executive Order 11246 of September 24, 1965, so that such provisions will be binding upon each subcontractor or vendor. The contractor will take such action with respect to any subcontract or purchase order as the administering agency may direct as a means of enforcing such provisions, including sanctions for noncompliance: provided, however, that in the event a contractor becomes involved in, or is threatened with, litigation with a subcontractor or vendor as a result of such direction by the administering agency the contractor may request the United States to enter into such litigation to protect the interests of the United States.

b. The Sub-Recipient further agrees that it will be bound by the above equal opportunity clause with respect to its own employment practices when it participates in federally assisted construction work: provided, that if the applicant so participating is a State or local government, the above equal opportunity clause is not applicable to any agency, instrumentality or subdivision of such government which does not participate in work on or under the contract.

c. The Sub-Recipient agrees that it will assist and cooperate actively with the administering agency and the Secretary of Labor in obtaining the compliance of contractors and subcontractors with the equal opportunity clause and the rules, regulations, and relevant orders of the Secretary of Labor, that it will furnish the administering agency and the Secretary of Labor such information as they may require for the supervision of such compliance, and that it will otherwise assist the administering agency in the discharge of the agency's primary responsibility for securing compliance.

d. The Sub-Recipient further agrees that it will refrain from entering into any contract or contract modification subject to Executive Order 11246 of September 24, 1965, with a contractor debarred from, or who has not demonstrated eligibility for, Government contracts and federally assisted construction contracts pursuant to the Executive order and will carry out such sanctions and penalties for violation of the equal opportunity clause as may be imposed upon contractors and subcontractors by the administering agency or the Secretary of Labor pursuant to Part II, Subpart D of the Executive order. In addition, the Sub-Recipient agrees that if it fails or refuses to comply with these undertakings, the administering agency may take any or all of the following actions: cancel, terminate, or suspend in whole or in part this grant (contract, loan, insurance, guarantee); refrain from extending any further assistance to the Sub-Recipient under the program with respect to which the failure or refund occurred until satisfactory

assurance of future compliance has been received from such Sub-Recipient; and refer the case to the Department of Justice for appropriate legal proceedings.

(27)COPELAND ANTI-KICKBACK ACT

The Sub-Recipient hereby agrees that, unless exempt under Federal law, it will incorporate or cause to be incorporated into any contract for construction work, or modification thereof, the following clause:

> i. Contractor. The contractor shall comply with 18 U.S.C. § 874, 40 U.S.C. § 3145, and the requirements of 29 C.F.R. pt. 3 as may be applicable, which are incorporated by reference into this contract.
>
> ii. Subcontracts. The contractor or subcontractor shall insert in any subcontracts the clause above and such other clauses as the FEMA may by appropriate instructions require, and also a clause requiring the subcontractors to include these clauses in any lower tier subcontracts. The prime contractor shall be responsible for the compliance by any subcontractor or lower tier subcontractor with all of these contract clauses.
>
> iii. Breach. A breach of the contract clauses above may be grounds for termination of the contract, and for debarment as a contractor and subcontractor as provided in 29 C.F.R. § 5.12.

(28)CONTRACT WORK HOURS AND SAFETY STANDARDS

If the Sub-Recipient, with the funds authorized by this Agreement, enters into a contract that exceeds $100,000 and involves the employment of mechanics or laborers, then any such contract must include a provision for compliance with 40 U.S.C. 3702 and 3704, as supplemented by Department of Labor regulations (29 CFR Part 5). Under 40 U.S.C. 3702 of the Act, each contractor must be required to compute the wages of every mechanic and laborer on the basis of a standard work week of 40 hours. Work in excess of the standard work week is permissible provided that the worker is compensated at a rate of not less than one and a half times the basic rate of pay for all hours worked in excess of 40 hours in the work week. The requirements of 40 U.S.C. 3704 are applicable to construction work and provide that no laborer or mechanic must be required to work in surroundings or under working conditions which are unsanitary, hazardous or dangerous. These requirements do not apply to the purchases of supplies or materials or articles ordinarily available on the open market, or contracts for transportation.

(29)CLEAN AIR ACT AND THE FEDERAL WATER POLLUTION CONTROL ACT

If the Sub-Recipient, with the funds authorized by this Agreement, enters into a contract that exceeds $150,000, then any such contract must include the following provision:

> Contractor agrees to comply with all applicable standards, orders or regulations issued pursuant to the Clean Air Act (42 U.S.C. 7401-7671q) and the Federal Water Pollution Control Act as amended (33 U.S.C. 1251-1387), and will report violations to FEMA and the Regional Office of the Environmental Protection Agency (EPA).

(30)SUSPENSION AND DEBARMENT

If the Sub-Recipient, with the funds authorized by this Agreement, enters into a contract, then any such contract must include the following provisions:

i. This contract is a covered transaction for purposes of 2 C.F.R. pt. 180 and 2 C.F.R. pt. 3000. As such the contractor is required to verify that none of the contractor, its principals (defined at 2 C.F.R. § 180.995), or its affiliates (defined at 2 C.F.R. § 180.905) are excluded (defined at 2 C.F.R. § 180.940) or disqualified (defined at 2 C.F.R. § 180.935).

ii. The contractor must comply with 2 C.F.R. pt. 180, subpart C and 2 C.F.R. pt. 3000, subpart C and must include a requirement to comply with these regulations in any lower tier covered transaction it enters into.

iii. This certification is a material representation of fact relied upon by the Division. If it is later determined that the contractor did not comply with 2 C.F.R. pt. 180, subpart C and 2 C.F.R. pt. 3000, subpart C, in addition to remedies available to the Division, the Federal Government may pursue available remedies, including but not limited to suspension and/or debarment.

iv. The bidder or proposer agrees to comply with the requirements of 2 C.F.R. pt. 180, subpart C and 2 C.F.R. pt. 3000, subpart C while this offer is valid and throughout the period of any contract that may arise from this offer. The bidder or proposer further agrees to include a provision requiring such compliance in its lower tier covered transactions.

(31)BYRD ANTI-LOBBYING AMENDMENT

If the Sub-Recipient, with the funds authorized by this Agreement, enters into a contract, then any such contract must include the following clause:

Byrd Anti-Lobbying Amendment, 31 U.S.C. § 1352 (as amended). Contractors who apply or bid for an award of $100,000 or more shall file the required certification. Each tier certifies to the tier above that it will not and has not used Federal appropriated funds to pay any person or organization for influencing or attempting to influence an officer or employee of any agency, a member of Congress, officer or employee of Congress, or an employee of a member of Congress in connection with obtaining any Federal contract, grant, or any other award covered by 31 U.S.C. § 1352. Each tier shall also disclose any lobbying with non-Federal funds that takes place in connection with obtaining any Federal award. Such disclosures are forwarded from tier to tier up to the recipient.

(32)CONTRACTING WITH SMALL AND MINORITY BUSINESSES, WOMEN'S BUSINESS ENTERPRISES, AND LABOR SURPLUS AREA FIRMS

a. If the Sub-Recipient, with the funds authorized by this Agreement, seeks to procure goods or services, then, in accordance with 2 C.F.R. §200.321, the Sub-Recipient shall take the following affirmative steps to assure that minority businesses, women's business enterprises, and labor surplus area firms are used whenever possible:

i. Placing qualified small and minority businesses and women's business enterprises on solicitation lists;

ii. Assuring that small and minority businesses, and women's business enterprises are solicited whenever they are potential sources;

iii. Dividing total requirements, when economically feasible, into smaller tasks or quantities to permit maximum participation by small and minority businesses, and women's business enterprises;

iv. Establishing delivery schedules, where the requirement permits, which encourage participation by small and minority businesses, and women's business enterprises;

v. Using the services and assistance, as appropriate, of such organizations as the Small Business Administration and the Minority Business Development Agency of the Department of Commerce; and

vi. Requiring the prime contractor, if subcontracts are to be let, to take the affirmative steps listed in paragraphs i. through v. of this subparagraph.

b. The requirement outlined in subparagraph a. above, sometimes referred to as "socioeconomic contracting," does not impose an obligation to set aside either the solicitation or award of a contract to these types of firms. Rather, the requirement only imposes an obligation to carry out and document the six affirmative steps identified above.

c. The "socioeconomic contracting" requirement outlines the affirmative steps that the Sub-Recipient must take; the requirements do not preclude the Sub-Recipient from undertaking additional steps to involve small and minority businesses and women's business enterprises.

d. The requirement to divide total requirements, when economically feasible, into smaller tasks or quantities to permit maximum participation by small and minority businesses, and women's business enterprises, does not authorize the Sub-Recipient to break a single project down into smaller components in order to circumvent the micro-purchase or small purchase thresholds so as to utilize streamlined acquisition procedures (e.g. "project splitting").

(33)ASSURANCES.

The Sub-Recipient shall comply with any Statement of Assurances incorporated as Attachment C.

IN WITNESS WHEREOF, the parties hereto have executed this Agreement.

SUB-RECIPIENT: City of Fort Pierce

By: _____

Name and Title: Linda Hudson, Mayor

Date: _____

FID#: 59-6000322

STATE OF FLORIDA
DIVISION OF EMERGENCY MANAGEMENT

By: _____

Name and Title: Michael Kennett, Deputy Director

Date: _____

Approved as to ~~form~~ form + correctness but should be carefully read by those administering it as there are very detailed requirements - see for example (28) + (29) on page 23. The agreement is replete with these sorts of Requirements.

Ben Z Bryan
City Attorney - FT Pierce

EXHIBIT – 1

THE FOLLOWING FEDERAL RESOURCES ARE AWARDED TO THE SUB-RECIPIENT UNDER THIS AGREEMENT:

Federal Program
Federal agency: Federal Emergency Management Agency: Hazard Mitigation Grant
Catalog of Federal Domestic Assistance title and number: 97.039
Award amount: **$856,198.00**

THE FOLLOWING COMPLIANCE REQUIREMENTS APPLY TO THE FEDERAL RESOURCES AWARDED UNDER THIS AGREEMENT:

- 2 CFR Part 200 Uniform Administrative Requirements, Cost Principles, and Audit Requirements for Federal Awards
- The Robert T. Stafford Disaster Relief and Emergency Assistance Act, Public Law 93-288, as amended, 42 U.S.C. 5121 et seq., and Related Authorities
- Sections 1361(A) of the National Flood Insurance Act of 1968, 42 U.S.C. 4104c, as amended by the National Flood Insurance Reform Act of 1994, Public Law 103-325 and the Bunning-Bereuter-Blumenauer Flood Insurance Reform Act of 2004, Public Law 108-264
- 31 CFR Part 205 Rules and Procedures for Funds Transfers

Federal Program:

1. Sub-Recipient is to use funding to perform the following eligible activities:
   - Localized Minor Drainage Improvement
2. Sub-Recipient is subject to all administrative and financial requirements as set forth in this Agreement, or will be in violation of the terms of the Agreement.

NOTE: Section 200.331(a)(1) of 2 C.F.R., as revised, and Section 215.97(5)(a), Florida Statutes, require that the information about Federal Programs and State Projects be included on pg. 1 of this sub-grant agreement and in Exhibit 1 be provided to the Sub-Recipient.

Attachment A

Budget and Scope of Work

STATEMENT OF PURPOSE:

The purpose of this Scope of Work (SOW) is to improve drainage of North 17th Street, in Fort Pierce, Florida; funded through the Hazard Mitigation Grant Program (HMGP) **DR-4283-67-R**, as approved by the Florida Division of Emergency Management (Division) and the Federal Emergency Management Agency (FEMA).

The Sub-Recipient, City of Fort Pierce, agrees to administer and complete the project per sealed engineering designs and construction plans as submitted by the Sub-Recipient and subsequently approved by the Division and FEMA. The Sub-Recipient shall complete the work in accordance with all applicable Federal, State and Local Laws, Regulations and Codes.

PROJECT OVERVIEW:

As a Hazard Mitigation Grant Program project, the Sub-Recipient proposes to improve the drainage of North 17th Street, from Orange Avenue to Avenue D, extending approximately 0.38 miles, in Fort Pierce, Florida, 34950 (Begins North 17th & Orange Ave 27.447283, -80.341469; and Ends at North 17th & Avenue D 27.453094, -80.341658).

The Construction scope of work proposes installation of pipes, drain inlets, manholes, connection of new piping to existing drainage structures, and roadway re-construction /upgrade. All activities are part of stormwater conveyance improvements for flood abatement.

The project shall provide protection against a 100-year storm event. Activities shall be completed in strict compliance with Federal, State and Local applicable Rules and Regulations.

TASKS & DELIVERABLES:

A) Tasks:

1) The Sub-Recipient shall procure the services of a qualified and licensed Florida contractor and execute a contract with the selected bidder to complete the scope of work as approved by the Division and FEMA. The Sub-Recipient shall select the qualified, licensed Florida contractor in accordance with the Sub-Recipient's procurement policy as well as all federal and state laws and regulations. All procurement activities shall contain sufficient source documentation and be in accordance with all applicable regulations.

   The Sub-Recipient shall be responsible for furnishing or contracting all labor, materials, equipment, tools, transportation and supervision and for performing all work per sealed engineering designs and construction plans presented to the Division by the Sub-Recipient and subsequently approved by the Division and FEMA.

   The Sub-Recipient and contractor shall be responsible for maintaining a safe and secure worksite for the duration of the work. The contractor shall maintain all work staging areas in a neat and presentable condition.

   The Sub-Recipient shall ensure that no contractors or subcontractors are debarred or suspended from participating in federally funded projects.

   The selected contractor shall have a current and valid occupational license/business tax receipt issued for the type of services being performed.

The Sub-Recipient shall provide documentation demonstrating the results of the procurement process. This shall include a rationale for the method of procurement and selection of contract type, contractor selection and/or rejection and bid tabulation and listing, and the basis of contract price.

The Sub-Recipient shall provide an executed "Debarment, Suspension, Ineligibility, Voluntary Exclusion Form" for each contractor and/or subcontractor performing services under this agreement.

Executed contracts with contractors and/or subcontractors shall be provided to the Division by the Sub-Recipient.

The Sub-Recipient shall provide copies of professional licenses for contractors selected to perform services. The Sub-Recipient shall provide a copy of a current and valid occupational license or business tax receipt issued for the type of services to be performed by selected contractor.

2) The Sub-Recipient shall monitor and manage the installation to improve the drainage and provide flood protection

The project shall be implemented in accordance with sealed engineering designs and construction plans previously presented to the Division by the Sub-Recipient and subsequently approved by the Division and FEMA. The Sub-Recipient shall ensure that all applicable state, local and federal laws and regulations are followed and documented, as appropriate.

The project consists of the general construction and furnishing of all materials, equipment, labor and fees to minimize recurring flooding and reduce repetitive flood loss to structures and roadways.

The Sub-Recipient shall fully perform the approved project, as described in the submitted documents, in accordance with the approved scope of work, budget line item, allocation of funds and applicable terms and conditions indicated herein. The Sub-Recipient shall not deviate from the approved project terms and conditions.

Construction activities shall be completed by a qualified and licensed Florida contractor. All construction activities shall be monitored by the professional of record. The Sub-Recipient shall complete the project in accordance with all required permits. All work shall be completed in accordance with applicable codes and standards.

Upon completion of the work, the Sub-Recipient shall schedule and participate in a final inspection of the completed project by the local municipal or county official, or other approving official, as applicable. The official shall inspect and certify that all installation was in accordance with the manufacturer's specifications. Any deficiencies found during this final inspection shall be corrected by the Sub-Recipient prior to Sub-Recipient's submittal of the final inspection request to the Division.

Upon completion of Task 2, the Sub-Recipient shall submit the following documents with sufficient supporting documentation, and provide a summary of all contract scope of work and scope of work changes, if any. Additional documentation for closeout shall include:

a) Signed and Sealed As-built project plans (drawings) by the Professional of Record, two hard copies and electronic version (via email or CD); and

b) Letter of Completion:

   1. Affirming that the project was completed in conformance with the approved project drawings, specifications and scope; and

   2. Certifying Compliance with all applicable codes;

c) Letter verifying compliance with the National Historic Preservation Act, to include if archaeological material or human remains were encountered during project activities, if so, how they were handled.

d) Proof of compliance with Project Requirements and Conditions contained herein.

3) During the course of this agreement the Sub-Recipient shall submit requests for reimbursement. Adequate and complete source documentation shall be submitted to support all costs (federal share and local share) related to the project. In some cases, all project activities may not be fully complete

prior to requesting reimbursement of costs incurred in completion of this scope of work; however, a partial reimbursement may be requested.

The Sub-Recipient shall submit an Affidavit signed by the Sub-Recipient's project personnel with each reimbursement request attesting to the completion of the work, disbursements or payments were made in accordance with all agreement and regulatory conditions, and that reimbursement is due and has not been previously requested.

The Sub-Recipient shall maintain accurate time records. The Sub-Recipient shall ensure invoices are accurate and any contracted services were rendered within the terms and timelines of this agreement. All supporting documentation shall agree with the requested billing period. All costs submitted for reimbursement shall contain adequate source documentation which may include but not be limited to: cancelled checks, bank statements, Electronic Funds Transfer, paid bills and invoices, payrolls, time and attendance records, contract and subcontract award documents.

Construction Expense: The Sub-Recipient shall pre-audit bills, invoices, and/or charges submitted by the contractors and subcontractors and pay the contractors and subcontractors for approved bills, invoices, and/or charges. Sub-Recipient shall ensure that all contractor/subcontractor bills, invoices, and/or charges are legitimate and clearly identify the activities being performed and associated costs.

Project Management Expenses: The Sub-Recipient shall pre-audit source documentation such as payroll records, project time sheets, attendance logs, etc. Documentation shall be detailed information describing tasks performed, hours devoted to each task, and the hourly rate charged for each hour including enough information to calculate the hourly rates based on payroll records. Employee benefits shall be clearly shown.

The Division shall review all submitted requests for reimbursement for basic accuracy of information. Further, the Division shall ensure that no unauthorized work was completed prior to the approved project start date by verifying vendor and contractor invoices. The Division shall verify that reported costs were incurred in the performance of eligible work, that the approved work was completed, and that the mitigation measures are in compliance with the approved scope of work prior to processing any requests for reimbursement.

Review and approval of any third party in-kind services, if applicable, shall be conducted by the Division in coordination with the Sub-Recipient. Quarterly reports shall be submitted by the Sub-Recipient and received by the Division at the times provided in this agreement prior to the processing of any reimbursement.

The Sub-Recipient shall submit to the Division requests for reimbursement of actual construction and managerial costs related to the project as identified in the project application, sealed engineering designs, and construction plans. The requests for reimbursement shall include:

a) Contractor, subcontractor, and/or vendor invoices which clearly display dates of services performed, description of services performed, location of services performed, cost of services performed, name of service provider and any other pertinent information;

b) Proof of payment from the Sub-Recipient to the contractor, subcontractor, and/or vendor for invoiced services;

c) Clear identification of amount of costs being requested for reimbursement as well as costs being applied against the local match amount;

The Sub-Recipient's final request for reimbursement shall include the final construction project cost. Supporting documentation shall show that all contractors and subcontractors have been paid.

B) <u>Deliverables:</u>

Mitigation Activities consist of drainage improvements to 17th Street from Orange Avenue to Avenue D, approximately 0.38 miles in Fort Pierce, Florida.

The completed project shall provide protection against a 100-year storm event.

Provided the Sub-Recipient performs in accordance with the Scope of Work outlined in this Agreement, the Division shall reimburse the Sub-Recipient based on the percentage of overall project completion.

PROJECT CONDITIONS AND REQUIREMENTS:

C) Engineering:

1) The Sub-Recipient shall submit to the Division an official letter stating that the project is 100% complete and ready for the Division's Final Inspection of the project.
2) The Sub-Recipient shall submit a signed and sealed final copy of the completed project's As-built drawings and all necessary supporting documentation, and provide a summary of all contract scope of work changes, if any.
3) The Sub-Recipient shall provide a copy of the Notice of commencement, and any local official Inspection Report and/or Final approval, as applicable.
4) The Sub-Recipient shall submit a certified letter of completion from Engineer of Record. The Sub-Recipient's Engineer of Record shall provide a formal certificate or letter affirming that the project has been completed in conformance with the approved project drawings, specifications, scope, and applicable codes.

D) Environmental:

1) Sub-Recipient shall follow all applicable state, local and federal laws regulations and requirements, and obtain (before starting project work) and comply with all required permits and approvals. Failure to obtain all appropriate federal, state, and local environmental permits and clearances may jeopardize federal funding. If project work is delayed for a year or more after the date of the categorical exclusion (CATEX), then coordination with and project review by regulatory agencies shall be redone.
2) Any change, addition or supplement to the approved Scope of Work that alters the project (including other work not funded by FEMA, but done substantially at the same time), regardless of the budget implications, shall require re-submission of the application to FEMA through the Division for National Environmental Policy Act (NEPA) re-evaluation before starting project work.
3) The Sub-Recipient shall monitor ground disturbing activities during construction, and if any potential archeological resources are discovered, shall immediately cease construction in that area and notify the Division and FEMA.

   If human remains or intact archaeological deposits are uncovered, work in the vicinity of the discovery shall stop immediately and all reasonable measures to avoid or minimize harm to the finds shall be taken. The Sub-Recipient shall ensure that archaeological discoveries are secured in place, that access to the sensitive area is restricted, and that all reasonable measures are taken to avoid further disturbance of the discoveries.

   The Sub-Recipient's contractor shall provide immediate notice of such discoveries to the Sub-Recipient. The Sub-Recipient shall notify the Florida Division of Historic Resources, the Division's State Environmental Liaison Officer and FEMA within 24 hours of the discovery. Work in the vicinity of the discovery may not resume until FEMA and the Division has completed consultation with SHPO, Tribes, and other consulting parties as necessary.

   In the event that unmarked human remains are encountered during permitted activities, all work shall stop immediately and the proper authorities notified in accordance with ***Florida Statutes, Section 872.05***.

4) Construction vehicles and equipment used for this project shall be maintained in good working order to minimize pollutant emissions.

E) Programmatic:

1) A change in the scope of work *must* be approved by the Division and FEMA in advance regardless of the budget implications.
2) The Sub-Recipient must notify the Division as soon as significant developments becomes known, such as delays or adverse conditions that might raise costs or delay completion, or favorable conditions allowing lower costs or earlier completion.
3) The Sub-Recipient must "obtain prior written approval for any budget revision which would result in a need for additional funds" [44 CFR 13(c)], from the Division and FEMA.
4) Project is approved with the condition that the enclosed list of deliverables shall be submitted, 30-days prior to the Period of Performance date, for review and approval by the Division; for submittal to FEMA for closeout.
5) Any extension of the Period of Performance shall be submitted to FEMA, 60 days prior to the expiration date. Therefore, any request for a Period of Performance Extension shall be in writing and submitted along with substantiation of new expiration date, and a new schedule of work, to the Division a minimum of seventy (70) days prior to the expiration date, for Division processing to FEMA.
6) The Sub-Recipient must avoid duplication of benefits between the HMGP and any other form of assistance, as required by Section 312 of the Stafford Act, and further clarification in 44 CFR 206.191.
7) A copy of the executed subcontract agreement must be forwarded to the Division within 10 days of execution.
8) If the Sub-Recipient is not the current title holder of the affected properties, the Sub-Recipients shall provide documentation confirming the property acquisition and easement rights were obtained voluntarily. If condemnation or eminent domain is used to obtain easement rights, FEMA shall not pay for any associated costs or payments to the property owner. Furthermore, FEMA shall not consider it an eligible contribution to the non-Federal cost share requirement and shall not financially participate in that component of a project if land or easements are obtained involuntarily.

This is FEMA project number **4283-67-R,** is funded under HMGP; FEMA-4283-DR-FL; and must adhere to all program guidelines established for the HMGP in accordance with the PAS Operational Agreement for Disaster 4283.

FEMA awarded this project on July 9, 2018; with a Pre-Award date of October 8, 2016; this Agreement shall begin upon execution by both parties, and the Period of Performance for this project shall end on **March 31, 2021**.

F) FINANCIAL CONSEQUENCES:

If the Sub-Recipient fails to comply with any term of the award, the Division shall take one or more of the following actions, as appropriate in the circumstances:

1) Temporarily withhold cash payments pending correction of the deficiency by the Sub-Recipient;
2) Disallow all or part of the cost of the activity or action not in compliance;
3) Wholly or partly suspend or terminate the current award for the Sub-Recipient's program;

4) Withhold further awards for the program; or

5) Take other remedies that may be legally available.

SCHEDULE OF WORK

State and Local Contracting	3	Months
Construction Plan/Technical Specifications:	3	Months
Bidding:	3	Months
Construction:	18	Months
Final Inspections:	3	Months
Closeout Compliance:	3	Months
Total Period of Performance:	**33**	**Months**

BUDGET

Line Item Budget*

	Project Costs	Federal Share	Local Share
Materials:	$859,315.00	$644,486.00	$214,829.00
Labor:	$150,000.00	$112,500.00	$37,500.00
Fees (Pre-Award):	$17,600.00	$13,200.00	$4,400.00
Fees:	$114,682.00	$86,012.00	$28,670.00
Total Project Costs:	**$1,141,597.00**	**$856,198.00**	**$285,399.00**

**Any line item amount in this Budget may be increased or decreased 10% or less without an amendment to this Agreement being required, so long as the overall amount of the funds obligated under this Agreement is not increased.*

*This project has a Pre-Award, approved by FEMA in the amount of $17,600.00 project costs with a start date of **October 8, 2016**.*

Funding Summary

Federal Share:	$856,198.00	(75.0%)
Local Share:	$285,399.00	(25.0%)
Total Project Cost:	**$1,141,597.00**	**(100.0%)**

Attachment B

Program Statutes and Regulations

The parties to this Agreement and the Hazard Mitigation Grant Program (HMGP) are generally governed by the following statutes and regulations:

(1) The Robert T. Stafford Disaster Relief and Emergency Assistance Act;

(2) 44 CFR Parts 7, 9, 10, 13, 14, 17, 18, 25, 206, 220, and 221, and any other applicable FEMA policy memoranda and guidance documents;

(3) State of Florida Administrative Plan for the Hazard Mitigation Grant Program;

(4) Hazard Mitigation Assistance Guidance- February 27, 2015 Update; and

(5) All applicable laws and regulations delineated in Attachment C of this Agreement.

In addition to the above statutes and regulations, the Sub-recipient must comply with the following:

The Sub-recipient shall fully perform the approved hazard mitigation project, as described in the Application and Attachment A (Budget and Scope of Work) attached to this Agreement, in accordance with approved scope of work indicated therein, the estimate of costs indicated therein, the allocation of funds indicated therein, and the terms and conditions of this Agreement. The Sub-recipient shall not deviate from the approved project and the terms and conditions of this Agreement. The Sub-recipient shall comply with any and all applicable codes and standards in performing work funded under this Agreement, and shall provide any appropriate maintenance and security for the project.

Any development permit issued by, or development activity undertaken by, the Sub-recipient and any land use permitted by or engaged in by the Sub-recipient, shall be consistent with the local comprehensive plan and land development regulations prepared and adopted pursuant to Chapter 163, Part II, Florida Statutes. Funds shall be expended for, and development activities and land uses authorized for, only those uses which are permitted under the comprehensive plan and land development regulations. The Sub-recipient shall be responsible for ensuring that any development permit issued and any development activity or land use undertaken is, where applicable, also authorized by the Water Management District, the Florida Department of Environmental Protection, the Florida Department of Health, the Florida Game and Fish Commission, and any Federal, State, or local environmental or land use permitting authority, where required. The Sub-recipient agrees that any repair or construction shall be in accordance with applicable standards of safety, decency, and sanitation, and in conformity with applicable codes, specifications and standards.

The Sub-recipient will provide and maintain competent and adequate engineering supervision at the construction site to ensure that the completed work conforms with the approved plans and specifications and will furnish progress reports and such other information to HMGP as may be required.

If the hazard mitigation project described in Attachment A includes an acquisition or relocation project, then the Sub-recipient shall ensure that, as a condition of funding under this Agreement, the owner of the affected real property shall record in the public records of the county where it is located the following covenants and restrictions, which shall run with and apply to any property acquired, accepted, or from which a structure will be removed pursuant to the project.

(1) The property will be dedicated and maintained in perpetuity for a use that is compatible with open space, recreational, or wetlands management practices;

(2) No new structure will be erected on property other than:
   a. a public facility that is open on all sides and functionally related to a designed open space;
   b. a restroom; or

(3) A structure that the Director of the Federal Emergency Management Agency approves in writing before the commencement of the construction of the structure;

(4) After the date of the acquisition or relocation no application for disaster assistance for any purpose will be made to any Federal entity and no disaster assistance will be provided for the property by any Federal source; and

(5) If any of these covenants and restrictions is violated by the owner or by some third party with the knowledge of the owner, fee simple title to the Property described herein shall be conveyed to the Board of Trustees of the Internal Improvement Trust Fund of the State of Florida without further notice to the owner, its successors and assigns, and the owner, its successors and assigns shall forfeit all right, title and interest in and to the property.

HMGP Contract Manager will evaluate requests for cost overruns and submit to the regional Director written determination of cost overrun eligibility. Cost overruns shall meet Federal regulations set forth in 44 CFR 206.438(b).

The National Environmental Policy Act (NEPA) stipulates that additions or amendments to a HMGP Sub-Recipient Scope of Work (SOW) shall be reviewed by all State and Federal agencies participating in the NEPA process.

As a reminder, the Sub-recipient must obtain prior approval from the State, before implementing changes to the approved project Scope of Work (SOW). Per the Uniform Administrative Requirements for Grants and Cooperative Agreements to State and Local Governments:

(1) For Construction projects, the grantee must "obtain prior written approval for any budget revision which result in a need for additional funds" (44 CFR 13(c));

(2) A change in the Scope of Work must be approved by FEMA in advance regardless of the budget implications; and

(3) The Sub-recipient must notify the State as soon as significant developments become known, such as delays or adverse conditions that might raise costs or delay completion, or favorable conditions allowing lower cost or earlier completion. Any extensions of the period of performance must be submitted to FEMA sixty days prior to the project expiration date.

The Sub-recipient assures that it will comply with the following statutes and regulations to the extent applicable:

(1) 53 Federal Register 8034
(2) Federal Acquisition Regulations 31.2
(3) Section 1352, Title 31, US Code
(4) Chapter 473, Florida Statutes
(5) Chapter 215, Florida Statutes
(6) Section 768.28, Florida Statutes
(7) Chapter 119, Florida Statutes
(8) Section 216.181(6), Florida Statutes
(9) Cash Management Improvement Act of 1990
(10) American with Disabilities Act
(11) Section 112.061, Florida Statutes
(12) Immigration and Nationality Act
(13) Section 286.011, Florida Statutes

(14) 2 CFR, Part 200 – Uniform Administrative Requirements, Cost Principles, and Audit Requirements for Federal Awards
(15) Uniform Relocation Assistance and Real Property Acquisitions Act of 1970
(16) Title I of the Omnibus Crime Control and Safe Streets Act of 1968
(17) Juvenile Justice and Delinquency Prevention Act, or the Victims of Crime Act
(18) Omnibus Crime Control and Safe Streets Act of 1968, as amended
(19) Victims of Crime Act (as appropriate)
(20) Section 504 of the Rehabilitation Act of 1973, as amended
(21) Subtitle A, Title II of the Americans with Disabilities Act (ADA) (1990)
(22) Department of Justice regulations on disability discrimination, 28 CFR, Part 35 and Part 39
(23) 42 U.S.C. 5154a

Attachment C

Statement of Assurances

To the extent the following provisions apply to this Agreement, the Sub-recipient certifies that:

(a) It possesses legal authority to enter into this Agreement and to carry out the proposed program;

(b) Its governing body has duly adopted or passed as an official act of resolution, motion or similar action authorizing the execution of the hazard mitigation agreement with the Division of Emergency Management (DEM), including all understandings and assurances contained in it, and directing and authorizing the Sub-recipient's chief administrative officer or designee to act in connection with the application and to provide such additional information as may be required;

(c) No member of or delegate to the Congress of the United States, and no Resident Commissioner, shall receive any share or part of this Agreement or any benefit. No member, officer, or employee of the Sub-recipient or its designees or agents, no member of the governing body of the locality in which this program is situated, and no other public official of the locality or localities who exercises any functions or responsibilities with respect to the program during his tenure or for one year after, shall have any interest, direct or indirect, in any contract or subcontract, or the proceeds, for work be performed in connection with the program assisted under this Agreement. The Sub-recipient shall incorporate, in all contracts or subcontracts a provision prohibiting any interest pursuant to the purpose stated above;

(d) All Sub-recipient contracts for which the State Legislature is in any part a funding source, shall contain language to provide for termination with reasonable costs to be paid by the Sub-recipient for eligible contract work completed prior to the date the notice of suspension of funding was received by the Sub-recipient. Any cost incurred after a notice of suspension or termination is received by the Sub-recipient may not be funded with funds provided under this Agreement unless previously approved in writing by the Division. All Sub-recipient contracts shall contain provisions for termination for cause or convenience and shall provide for the method of payment in such event;

(e) It will comply with:

(1) Contract Work Hours and Safety Standards Act of 1962, 40 U.S.C. 327 et seq., requiring that mechanics and laborers (including watchmen and guards) employed on federally assisted contracts be paid wages of not less than one and one-half times their basic wage rates for all hours worked in excess of forty hours in a work week; and

(2) Federal Fair Labor Standards Act, 29 U.S.C. Section 201 et seq., requiring that covered employees be paid at least minimum prescribed wage, and also that they be paid one and one-half times their basic wage rates for all hours worked in excess of the prescribed work-week.

(f) It will comply with

(1) Title VI of the Civil Rights Act of 1964 (P.L. 88-352), and the regulations issued pursuant thereto, which provides that no person in the United States shall on the grounds of race, color, or national origin, be excluded from participation in, be denied the benefits of, or be otherwise subjected to discrimination under any program or activity for which the Sub-recipient received Federal financial assistance and will immediately take any measures necessary to effectuate this assurance. If any real property or structure thereon is provided or improved with the aid of Federal financial assistance extended to the Sub-recipient, this assurance shall obligate the Sub-recipient, or in the case of any transfer of such property, any transferee, for the period during which the real property or structure is

used for a purpose for which the Federal financial assistance is extended, or for another purpose involving the provision of similar services or benefits;

(2) Any prohibition against discrimination on the basis of age under the Age Discrimination Act of 1975, as amended (42 U.S.C. 6101-6107) which prohibits discrimination on the basis of age or with respect to otherwise qualifies handicapped individuals as provided in Section 504 of the Rehabilitation Act of 1973;

(3) Executive Order 11246, as amended by Executive Orders 11375 and 12086, and the regulations issued pursuant thereto, which provide that no person shall be discriminated against on the basis of race, color, religion, sex or national origin in all phases of employment during the performance of federal or federally assisted construction contracts; affirmative action to insure fair treatment in employment, upgrading, demotion, or transfer; recruitment or recruitment advertising; layoff/termination, rates of pay or other forms of compensation; and election for training and apprenticeship;

(g) It will establish safeguards to prohibit employees from using positions for a purpose that is or gives the appearance of being motivated by a desire for private gain for themselves or others, particularly those with whom they have family, business, or other ties pursuant to Section 112.313 and Section 112.3135, Florida Statutes;

(h) It will comply with the Anti-Kickback Act of 1986, 41 U.S.C. Section 51 which outlaws and prescribes penalties for "kickbacks" of wages in federally financed or assisted construction activities;

(i) It will comply with the provisions of 18 U.S.C. 594, 598, 600-605 (further known as the Hatch Act) which limits the political activities of employees;

(j) It will comply with the flood insurance purchase and other requirements of the Flood Disaster Protection Act of 1973, as amended, 42 U.S.C. 4002-4107, including requirements regarding the purchase of flood insurance in communities where such insurance is available as a condition for the receipt of any Federal financial assistance for construction or acquisition purposes for use in any area having special flood hazards. The phrase "Federal financial assistance" includes any form of loan, grant, guaranty, insurance payment, rebate, subsidy, disaster assistance loan or grant, or any other form of direct or indirect Federal assistance;

For sites located within Special Flood Hazard Areas (SFHA), the Sub-recipient must include a FEMA Model Acknowledgement of Conditions of Mitigation of Property in a Special Flood Hazard Area with FEMA Grant Funds executed by the title holder with the closeout request verifying that certain SFHA requirements were satisfied on each of the properties. The Model Acknowledgement can be found at www.fema.gov/governmenta/grant/sfha_conditions.shtm

(k) It will require every building or facility(other than a privately owned residential structure) designed, constructed, or altered with funds provided under this Agreement to comply with the "Uniform Federal Accessibility Standards," (AS) which is Appendix A to 41 CFR Section 101-19.6 for general type buildings and Appendix A to 24 CFR, Part 40 for residential structures. The Sub-recipient will be responsible for conducting inspections to ensure compliance with these specifications by the contractor;

(l) It will, in connection with its performance of environmental assessments under the National Environmental Policy Act of 1969, comply with Section 106 of the National Historic Preservation Act of 1966 (U.S.C. 470), Executive Order 11593, 24 CFR, Part 800, and the Preservation of Archaeological and Historical Data Act of 1966 (16 U.S.C. 469a-1, et seq.) by:

(1) Consulting with the State Historic Preservation Office to identify properties listed in or eligible for inclusion in the National Register of Historic Places that are subject to adverse effects (see 36 CFR, Section 800.8) by the proposed activity; and

(2) Complying with all requirements established by the State to avoid or mitigate adverse effects upon such properties.

(3) Abiding by the terms and conditions of the **"Programmatic Agreement Among the Federal Emergency Management Agency, the Florida State Historic Preservation Office, the Florida Division of Emergency Management and the Advisory Council on Historic Preservation, (PA)"** which addresses roles and responsibilities of Federal and State entities in implementing Section 106 of the National Historic Preservation Act (NHPA), 16 U.S.C. 470(f), and implementing regulations in 36 CFR, Part 800.

(4) When any of the Sub-recipient's projects funded under this Agreement may affect a historic property, as defined in 36 CFR, Part 800 (2)(e), the Federal Emergency Management Agency (FEMA) may require the Sub-recipient to review the eligible scope of work in consultation with the State Historic Preservation Office (SHPO) and suggest methods of repair or construction that will conform with the recommended approaches set out in the **Secretary of Interior's Standards for Rehabilitation and Guidelines for Rehabilitating Historic Buildings 1992 (Standards),** the **Secretary of the Interior's Guidelines for Archeological Documentation (Guidelines)** (48 Federal Register 44734-37), or any other applicable Secretary of Interior standards. If FEMA determines that the eligible scope of work will not conform with the **Standards**, the Sub-recipient agrees to participate in consultations to develop, and after execution by all parties, to abide by, a written agreement that establishes mitigation and recondition measures, including but not limited to, impacts to archeological sites, and the salvage, storage, and reuse of any significant architectural features that may otherwise be demolished.

(5) The Sub-recipient agrees to notify FEMA and the Division if any project funded under this Agreement will involve ground disturbing activities, including, but not limited to: subsurface disturbance; removal of trees; excavation of footings and foundations, and installation of utilities (such as water, sewer, storm drains, electrical, gas, leach lines and septic tanks) except where these activities are restricted solely to areas previously disturbed by the installation, replacement or maintenance of such utilities. FEMA will request the SHPO's opinion on the potential that archeological properties may be present and be affected by such activities. The SHPO will advise the Sub-recipient on any feasible steps to be accomplished to avoid any National Register eligible archeological property or will make recommendations for the development of a treatment plan for the recovery or archeological data from the property.

If the Sub-recipient is unable to avoid the archeological property, develop, in consultation with SHPO, a treatment plan consistent with the **Guidelines** and take into account the Advisory Council on Historic Preservation (Council) publication "Treatment of Archeological Properties". The Sub-recipient shall forward information regarding the treatment plan to FEMA, the SHPO and the Council for review. If the SHPO and the Council do not object within 15 calendar days of receipt of the treatment plan, FEMA may direct the Sub-recipient to implement the treatment plan. If either the Council or the SHPO object, Sub-recipient shall not proceed with the project until the objection is resolved.

(6) The Sub-recipient shall notify the Division and FEMA as soon as practicable: (a) of any changes in the approved scope of work for a National Register eligible or listed property; (b) of all changes to a project that may result in a supplemental DSR or modify a HMGP project for a National Register eligible or listed property; (c) if it appears that a project funded under this Agreement will affect a previously unidentified property that may be eligible for inclusion in the National Register or affect a known historic property in an unanticipated manner. The Sub-recipient acknowledges that FEMA may require the Sub-recipient to stop construction in the vicinity of the discovery of a previously unidentified property that may eligible for inclusion in the National Register or upon learning that construction may affect a known historic property in an unanticipated manner. The Sub-recipient further acknowledges that FEMA may require the Sub-recipient to take all

reasonable measures to avoid or minimize harm to such property until FEMA concludes consultation with the SHPO. The Sub-recipient also acknowledges that FEMA will require, and the Sub-recipient shall comply with, modifications to the project scope of work necessary to implement recommendations to address the project and the property.

(7) The Sub-recipient acknowledges that, unless FEMA specifically stipulates otherwise, it shall not receive funding for projects when, with intent to avoid the requirements of the PA or the NHPA, the Sub-recipient intentionally and significantly adversely affects a historic property, or having the legal power to prevent it, allowed such significant adverse effect to occur.

(m) It will comply with Title IX of the Education Amendments of 1972, as amended (20 U.S.C. 1681-1683 and 1685-1686) which prohibits discrimination on the basis of sex;

(n) It will comply with the Comprehensive Alcohol Abuse and Alcoholism Prevention, Treatment and Rehabilitation Act of 1970, (42 U.S.C. 4521-45-94) relating to nondiscrimination on the basis of alcohol abuse or alcoholism;

(o) It will comply with 523 and 527 of the Public Health Service Act of 1912 (42 U.S.C. 290 dd-3 and 290 ee-3), as amended, relating to confidentiality of alcohol and drug abuse patient records;

(p) It will comply with Lead-Based Paint Poison Prevention Act (42 U.S.C. 4821 et seq.) which prohibits the use of lead based paint in construction of rehabilitation or residential structures;

(q) It will comply with the Energy Policy and Conservation Act (P.L. 94-163; 42 U.S.C. 6201-6422), and the provisions of the State Energy Conservation Plan adopted pursuant thereto;

(r) It will comply with the Laboratory Animal Welfare Act of 1966, (7 U.S.C. 2131-2159), pertaining to the care, handling, and treatment of warm blooded animals held for research, teaching, or other activities supported by an award of assistance under this Agreement;

(s) It will comply with Title VIII of the Civil Rights Act of 1968, (42 U.S.C 2000c and 42 U.S.C. 3601-3619), as amended, relating to non-discrimination in the sale, rental, or financing of housing, and Title VI of the Civil Rights Act of 1964 (P.L. 88-352), which prohibits discrimination on the basis of race, color or national origin;

(t) It will comply with the Clean Air Act of 1955, as amended, 42 U.S.C. 7401-7642;

(u) It will comply with the Clean Water Act of 1977, as amended, 42 U.S.C. 7419-7626

(v) It will comply with the endangered Species Act of 1973, 16 U.S.C. 1531-1544;

(w) It will comply with the Intergovernmental Personnel Act of 1970, 42 U.S.C. 4728-4763;

(x) It will assist the awarding agency in assuring compliance with the National Historic Preservation Act of 1966, as amended, 16 U.S.C. 270;

(y) It will comply with environmental standards which may be prescribed pursuant to the National Environmental Policy Act of 1969, 42 U.S.C. 4321-4347;

(z) It will assist the awarding agency in assuring compliance with the Preservation of Archeological and Historical Preservation Act of 1966, 16 U.S.C. 469a, et seq.;

(aa) It will comply with the Rehabilitation Act of 1973, Section 504, 29 U.S.C. 794, regarding non-discrimination;

(bb) It will comply with the environmental standards which may be prescribed pursuant to the Safe Drinking Water Act of 1974, 42 U.S.C. 300f-300j, regarding the protection of underground water sources;

(cc) It will comply with the requirements of Titles II and III of the Uniform Relocation Assistance and Property Acquisition Policies Act of 1970, 42 U.S.C. 4621-4638, which provide for fair and equitable treatment of persons displaced or whose property is acquired as a result of Federal or Federally assisted programs;

(dd) It will comply with the Wild and Scenic Rivers Act of 1968, 16 U.S.C. 1271-1287, related to protecting components or potential components of the national wild and scenic rivers system;

(ee) It will comply with the following Executive Orders: EO 11514 (NEPA); EO 11738 (violating facilities); EO 11988 (Floodplain Management); EO 11990 (Wetlands); and EO 12898 (Environmental Justice);

(ff) It will comply with the Coastal Barrier Resources Act of 1977, 16 U.S.C. 3510;

(gg) It will assure project consistency with the approved State program developed under the Coastal Zone Management Act of 1972, 16 U.S.C. 1451-1464; and

(hh) It will comply with the Fish and Wildlife Coordination Act of 1958, 16 U.S.C. 661-666.

(ii) With respect to demolition activities, it will:

(1) Create and make available documentation sufficient to demonstrate that the Sub-recipient and its demolition contractor have sufficient manpower and equipment to comply with the obligations as outlined in this Agreement.

(2) Return the property to its natural state as though no improvements had ever been contained thereon.

(3) Furnish documentation of all qualified personnel, licenses and all equipment necessary to inspect buildings located in the Sub-recipient's jurisdiction to detect the presence of asbestos and lead in accordance with requirements of the U.S. Environmental Protection Agency, the Florida Department of Environmental Protection and the County Health Department.

(4) Provide documentation of the inspection results for each structure to indicate:
   a. Safety Hazard Present
   b. Health Hazards Present
   c. Hazardous Materials Present

(5) Provide supervision over contractors or employees employed by the Sub-recipient to remove asbestos and lead from demolished or otherwise applicable structures.

(6) Leave the demolished site clean, level and free of debris.

(7) Notify the Division promptly of any unusual existing condition which hampers the contractor's work.

(8) Obtain all required permits.

(9) Provide addresses and marked maps for each site where water wells and septic tanks are to be closed along with the number of wells and septic tanks located on each site. Provide documentation of closures.

(10) Comply with mandatory standards and policies relating to energy efficiency which are contained in the State Energy Conservation Plan issued in compliance with the Energy Policy and Conservation Act (Public Law 94-163).

(11) Comply with all applicable standards, orders, or requirements issued under Section 112 and 306 of the Clean Air Act (42 U.S.C. 1857h), Section 508 of the Clean Water Act (33 U.S.C. 1368), Executive Order 11738, and the U.S. Environmental Protection Agency regulations (40 CFR, Part 15 and 61). This clause shall be added to any subcontracts.

(12) Provide documentation of public notices for demolition activities.

Attachment D

DIVISION OF EMERGENCY MANAGEMENT

REQUEST FOR ADVANCE OR REIMBURSEMENT OF HAZARD MITIGATION ASSISTANCE PROGRAM FUNDS

SUB-RECIPIENT: City of Fort Pierce

REMIT ADDRESS: _____

CITY: _____ STATE: _____ ZIP CODE: _____

PROJECT TYPE: Drainage PROJECT #: 4283-67-R

PROGRAM: Hazard Mitigation Program CONTRACT #: H0108

APPROVED BUDGET: _____ FEDERAL SHARE: _____ MATCH: _____

ADVANCED RECEIVED: _____ N/A ____ AMOUNT: _____ SETTLED? _____

Invoice Period: _____ To _____ Payment #: _____

Eligible Amount 100% (Current Request)	Obligated Federal Amount 75%	Obligated Non-Federal 25%	Division Use Only	
			Approved	Comments

TOTAL CURRENT REQUEST: $ _____

By signing this report, I certify to the best of my knowledge and belief that the report is true, complete, and accurate, and the expenditures, disbursements and cash receipts are for the purposes and objectives set forth in the terms and conditions of the Federal award. I am aware that any false, fictitious, or fraudulent information, or the omission of any material fact, may subject me to criminal, civil or administrative penalties for fraud, false statements, false claims or otherwise. (U.S. Code Title 18, Section 1001 and Title 31, Sections 3729-3730 and 3801-3812.

SUB-RECIPIENT SIGNATURE: _____

NAME / TITLE: _____ DATE: _____

TO BE COMPLETED BY THE DIVISION

APPROVED PROJECT TOTAL $ _____

ADMINISTRATIVE COST $ _____

APPROVED FOR PAYMENT $ _____

_____
GOVERNOR'S AUTHORIZED REPRESENTATIVE

_____
DATE

SUMMARY OF DOCUMENTATION IN SUPPORT OF AMOUNT CLAIMED FOR ELIGIBLE DISASTER WORK UNDER THE HAZARD MTIGATION ASSISTANCE PROGRAM

SUB-RECIPIENT: City of Fort Pierce PAYMENT #:

PROJECT TYPE: Drainage PROJECT #: 4283-67-R

PROGRAM: Hazard Mitigation Program CONTRACT #: H0108

	REF NO[2]	DATE[3]	DOCUMENTATION[4]	*(Check) AMOUNT*	ELIGIBLE COSTS (100%)
1					
2					
3					
4					
5					
6					
7					
8					
9					
This payment represents % completion of the project.				***TOTAL***	

[2] Recipient's internal reference number (e.g., Invoice, Receipt, Warrant, Voucher, Claim Check, or Schedule #)

[3] Date of delivery of articles, completion of work or performance services. (per document)

[4] List Documentation (Recipient's payroll, material out of recipient's stock, recipient owned equipment and name of vendor or contractor) by category (Materials, Labor, Fees) and line item in the approved project line item budget. Provide a brief description of the articles or services. List service dates per each invoice.

Attachment E
JUSTIFICATION OF ADVANCE PAYMENT

SUB-RECIPIENT: City of Fort Pierce

If you are requesting an advance, indicate same by checking the box below.

[ ] ADVANCE REQUESTED Advance payment of $ _____ is requested. Balance of payments will be made on a reimbursement basis. These funds are needed to pay staff, award benefits to clients, duplicate forms and purchase start-up supplies and equipment. We would not be able to operate the program without this advance.

If you are requesting an advance, complete the following chart and line item justification below. PLEASE NOTE: Calculate your estimated expenses at 100% of your expected needs for 90 days. Submit Attachment D with the cost share breakdown along with Attachment E and all supporting documentation.

ESTIMATED EXPENSES

BUDGET CATEGORY/LINE ITEMS (list applicable line items)	20___-20___ Anticipated Expenditures for First Three Months of Contract
For example ADMINISTRATIVE COSTS (Include Secondary Administration.)	
For example PROGRAM EXPENSES	
TOTAL EXPENSES	

LINE ITEM JUSTIFICATION (For each line item, provide a detailed justification explaining the need for the cash advance. The justification must include supporting documentation that clearly shows the advance will be expended within the first ninety (90) days of the contract term. Support documentation should include quotes for purchases, delivery timelines, salary and expense projections, etc. to provide the Division reasonable and necessary support that the advance will be expended within the first ninety (90) days of the contract term. Any advance funds not expended within the first ninety (90) days of the contract term as evidenced by copies of invoices and cancelled checks as required by the Budget and Scope of work showing 100% of expenditures for the 90 day period shall be returned to the Division Cashier, 2555 Shumard Oak Boulevard, Tallahassee, Florida 32399, within thirty (30) days of receipt, along with any interest earned on the advance.

Attachment F

DIVISION OF EMERGENCY MANAGEMENT
HAZARD MITIGATION GRANT PROGRAM
QUARTERLY REPORT FORM

***Instructions**: Complete and submit this form to the appropriate Project Manager within 15 days of each quarter's end date.*

SUB-RECIPIENT: City of Fort Pierce **PROJECT #:** 4283-67-R
PROJECT TYPE: Drainage **CONTRACT #:** H0108
PROGRAM: Hazard Mitigation Program **QUARTER ENDING:** _____

Advance Payment Information:
Advance Received ☐ N/A ☐ Amount: $ _____ Advance Settled? Yes ☐ No ☐

Provide reimbursement **Projections** for this project (*projections may change*):
Jul-Sep 20__ $ _____ **Oct-Dec 20__** $ _____ **Jan-Mar 20__** $ _____ **Apr-Jun 20__** $ _____

Target Dates:
Contract Initiation Date: _____ Contract Expiration Date: _____
Estimated Project Completion Date: _____

Project Proceeding on **Schedule**? ☐ Yes ☐ No *(If No, please describe under **Issues** below)*

Percentage of Work Completed (*may be confirmed by state inspectors*): _____%

Describe **Milestones** achieved during this quarter:

Provide a **Schedule** for the remainder of work to project completion: *(Milestones from Contract with estimated dates)*

Milestone	**Date**

Describe **Issues** or circumstances affecting completion date, milestones, scope of work, and/or cost:

Cost Status: ☐ Cost Unchanged ☐ Under Budget ☐ Over Budget

Additional **Comments**/Elaboration:

NOTE: Division of Emergency Management (DEM) staff may perform interim inspections and/or audits at any time. Events may occur between quarterly reports, which have significant impact upon your project(s), such as anticipated overruns, changes in scope of work, etc. Please contact the Division as soon as these conditions become known, otherwise you may be found non-compliant with your sub grant award.

Person Completing Form: Phone:

~ To be completed by Division staff ~

Date Reviewed: _____ *Reviewer:* _____
Actions:

Attachment G

Warranties and Representations

Financial Management

The Sub-Recipient's financial management system must comply with 2 C.F.R. §200.302.

Procurements

Any procurement undertaken with funds authorized by this Agreement must comply with the requirements of 2 C.F.R. §200, Part D—Post Federal Award Requirements—Procurement Standards (2 C.F.R. §§200.317 through 200.326).

Business Hours

The Sub-Recipient shall have its offices open for business, with the entrance door open to the public, and at least one employee on site, from: **8:00 AM - 5:00 PM, Monday Thru Friday, as applicable.**

Licensing and Permitting

All subcontractors or employees hired by the Sub-Recipient shall have all current licenses and permits required for all of the particular work for which they are hired by the Sub-Recipient.

Attachment H

Certification Regarding Debarment, Suspension, Ineligibility And Voluntary Exclusion

Subcontractor Covered Transactions

(1) The prospective subcontractor, _____, of the Sub-Recipient certifies, by submission of this document, that neither it nor its principals is presently debarred, suspended, proposed for debarment, declared ineligible, or voluntarily excluded from participation in this transaction by any Federal department or agency.

(2) Where the Sub-Recipient's subcontractor is unable to certify to the above statement, the prospective subcontractor shall attach an explanation to this form.

SUBCONTRACTOR

_____

By: _____
Signature

_____
Name and Title

_____
Street Address

_____
City, State, Zip

_____
Date

City of Fort Pierce
Sub-Recipient's Name

H0108
DEM Contract Number

4283-67-R
FEMA Project Number

Approved As To Form & Correctness but see comment on page 26
Benj Bryan
City Atty - Fort Pierce

Attachment I

Federal Funding Accountability and Transparency Act

Instructions and Worksheet

PURPOSE: The Federal Funding Accountability and Transparency Act (FFATA) was signed on September 26, 2006. The intent of this legislation is to empower every American with the ability to hold the government accountable for each spending decision. The FFATA legislation requires information on federal awards (federal assistance and expenditures) be made available to the public via a single, searchable website, which is http://www.usaspending.gov/.

The FFATA Sub-award Reporting System (FSRS) is the reporting tool the Florida Division of Emergency Management ("FDEM" or "Division") must use to capture and report sub-award and executive compensation data regarding first-tier sub-awards that obligate $25,000 or more in Federal funds (excluding Recovery funds as defined in section 1512(a) (2) of the American Recovery and Reinvestment Act of 2009, Pub. L. 111-5).

Note: This "Instructions and Worksheet" is meant to explain the requirements of the FFATA and give clarity to the FFATA Form distributed to sub-awardees for completion. All pertinent information below should be filled out, signed, and returned to the project manager.

ORGANIZATION AND PROJECT INFORMATION

The following information must be provided to the FDEM prior to the FDEM's issuance of a sub-award (Agreement) that obligates $25,000 or more in federal funds as described above. Please provide the following information and return the signed form to the Division as requested.

PROJECT #: 4283-67-R

FUNDING AGENCY: Federal Emergency Management Agency

AWARD AMOUNT: $ 856,198.00

OBLIGATION/ACTION DATE: July 9, 2018

SUBAWARD DATE (if applicable): _____

DUNS#: 12-271-4744

DUNS# +4: _____

*If your company or organization does not have a DUNS number, you will need to obtain one from Dun & Bradstreet at 866-705-5711 or use the web form (http://fedgov.dnb.com/webform). The process to request a DUNS number takes about ten minutes and is free of charge.

BUSINESS NAME: _____

DBA NAME (IF APPLICABLE): _____

PRINCIPAL PLACE OF BUSINESS ADDRESS: _____

ADDRESS LINE 1: _____

ADDRESS LINE 2: _____

ADDRESS LINE 3: _____

CITY _____ STATE _____ ZIP CODE+4** _____

PARENT COMPANY DUNS# (if applicable): _____

CATALOG OF FEDERAL DOMESTIC ASSISTANCE (CFDA#): _____

DESCRIPTION OF PROJECT (Up to 4000 Characters)

As a Hazard Mitigation Grant Program project, the Sub-Recipient proposes to improve the drainage of North 17th Street, from Orange Avenue to Avenue D, extending approximately 0.38 miles, in Fort Pierce, Florida, 34950 (Begins North 17th & Orange Ave 27.447283, -80.341469; and Ends at North 17th & Avenue D 27.453094, -80.341658).

The Construction scope of work proposes installation of pipes, drain inlets, manholes, connection of new piping to existing drainage structures, and roadway re-construction /upgrade. All activities are part of stormwater conveyance improvements for flood abatement.

The project shall provide protection against a 100-year storm event. Activities shall be completed in strict compliance with Federal, State and Local applicable Rules and Regulations.

Verify the approved project description above, if there is any discrepancy, please contact the project manager.

PRINCIPAL PLACE OF PROJECT PERFORMANCE (IF DIFFERENT THAN PRINCIPAL PLACE OF BUSINESS): _____

ADDRESS LINE 1: North 17th Street, from Orange Avenue to Avenue D

ADDRESS LINE 2: _____

ADDRESS LINE 3: _____

CITY Fort Pierce STATE Florida ZIP CODE+4** 34950

CONGRESSIONAL DISTRICT FOR PRINCIPAL PLACE OF PROJECT PERFORMANCE:

**Providing the Zip+4 ensures that the correct Congressional District is reported.

EXECUTIVE COMPENSATION INFORMATION:

1. In your business or organization's previous fiscal year, did your business or organization (including parent organization, all branches, and all affiliates worldwide) receive (a) 80 percent or more of your annual gross revenues from Federal procurement contracts (and subcontracts) and Federal

financial assistance (e.g. loans, grants, subgrants, and/or cooperative agreements, etc.) subject to the Transparency Act, as defined at 2 CFR 170.320; , (b) $25,000,000 or more in annual gross revenues from U.S. Federal procurement contracts (and subcontracts) and Federal financial assistance (e.g. loans, grants, subgrants, and/or cooperative agreements, etc.) subject to the Transparency Act?

Yes ☐ No ☐

If the answer to Question 1 is "Yes," continue to Question 2. If the answer to Question 1 is "No", move to the signature block below to complete the certification and submittal process.

2. Does the public have access to information about the compensation of the executives in your business or organization (including parent organization, all branches, and all affiliates worldwide) through periodic reports filed under section 13(a) or 15(d) of the Securities Exchange Act of 1934 (15 U.S.C. 78m(a), 78o(d)) Section 6104 of the Internal Revenue Code of 1986?

   Yes ☐ No ☐

If the answer to Question 2 is "Yes," move to the signature block below to complete the certification and submittal process. [Note: Securities Exchange Commission information should be accessible at http//www.sec.gov/answers/execomp.htm. Requests for Internal Revenue Service (IRS) information should be directed to the local IRS for further assistance.]

If the answer to Question 2 is "No" FFATA reporting is required. Provide the information required in the "TOTAL COMPENSATION CHART FOR MOST RECENTLY COMPLETED FISCAL YEAR" appearing below to report the "Total Compensation" for the five (5) most highly compensated "Executives", in rank order, in your organization. For purposes of this request, the following terms apply as defined in 2 CFR Ch. 1 Part 170 Appendix A:

"Executive" is defined as "officers, managing partners, or other employees in management positions".

"Total Compensation" is defined as the cash and noncash dollar value earned by the executive during the most recently completed fiscal year and includes the following:

i. Salary and bonus.

ii. Awards of stock, stock options, and stock appreciation rights. Use the dollar amount recognized for financial statement reporting purposes with respect to the fiscal year in accordance with the Statement of Financial Accounting Standards No. 123 (Revised 2004) (FAS 123R), Shared Based Payments.

iii. Earnings for services under non-equity incentive plans. This does not include group life, health, hospitalization or medical reimbursement plans that do not discriminate in favor of executives, and are available generally to all salaried employees.

iv. Change in pension value. This is the change in present value of defined benefit and actuarial pension plans.

v. Above-market earnings on deferred compensation which is not tax-qualified.

vi. Other compensation, if the aggregate value of all such other compensation (e.g. severance, termination payments, value of life insurance paid on behalf of the employee, perquisites or property) for the executive exceeds $10,000.

TOTAL COMPENSATION CHART FOR MOST RECENTLY COMPLETED FISCAL YEAR

(Date of Fiscal Year Completion _____)

Rank (Highest to Lowest)	**Name (Last, First, MI)**	**Title**	**Total Compensation for Most Recently Completed Fiscal Year**
1			
2			
3			
4			
5			

THE UNDERSIGNED CERTIFIES THAT ON THE DATE WRITTEN BELOW, THE INFORMATION PROVIDED HEREIN IS ACCURATE.

SIGNATURE: _____

NAME AND TITLE: _____

DATE: _____

Attachment J

Mandatory Contract Provisions

Provisions:

Any contract or subcontract funded by this Agreement must contain the applicable provisions outlined in Appendix II to 2 C.F.R. Part 200. It is the responsibility of the sub-recipient to include the required provisions. The Division provides the following list of sample provisions that may be required:

(D) Davis-Bacon Act, as amended (40 U.S.C. 3141–3148). When required by Federal program legislation, all prime construction contracts in excess of $2,000 awarded by non-Federal entities must include a provision for compliance with the Davis-Bacon Act (40 U.S.C. 3141–3144, and 3146–3148) as supplemented by Department of Labor regulations (29 CFR Part 5, "Labor Standards Provisions Applicable to Contracts Covering Federally Financed and Assisted Construction"). In accordance with the statute, contractors must be required to pay wages to laborers and mechanics at a rate not less than the prevailing wages specified in a wage determination made by the Secretary of Labor. In addition, contractors must be required to pay wages not less than once a week. The non-Federal entity must place a copy of the current prevailing wage determination issued by the Department of Labor in each solicitation. The decision to award a contract or subcontract must be conditioned upon the acceptance of the wage determination. The non-Federal entity must report all suspected or reported violations to the Federal awarding agency. The contracts must also include a provision for compliance with the Copeland "Anti-Kickback" Act (40 U.S.C. 3145), as supplemented by Department of Labor regulations (29 CFR Part 3, "Contractors and Subcontractors on Public Building or Public Work Financed in Whole or in Part by Loans or Grants from the United States"). The Act provides that each contractor or subrecipient must be prohibited from inducing, by any means, any person employed in the construction, completion, or repair of public work, to give up any part of the compensation to which he or she is otherwise entitled. The non-Federal entity must report all suspected or reported violations to the Federal awarding agency.

(E) Contract Work Hours and Safety Standards Act (40 U.S.C. 3701–3708). Where applicable, all contracts awarded by the non-Federal entity in excess of $100,000 that involve the employment of mechanics or laborers must include a provision for compliance with 40 U.S.C. 3702 and 3704, as supplemented by Department of Labor regulations (29 CFR Part 5). Under 40 U.S.C. 3702 of the Act, each contractor must be required to compute the wages of every mechanic and laborer on the basis of a standard work week of 40 hours. Work in excess of the standard work week is permissible provided that the worker is compensated at a rate of not less than one and a half times the basic rate of pay for all hours worked in excess of 40 hours in the work week. The requirements of 40 U.S.C. 3704 are applicable to construction work and provide that no laborer or mechanic must be required to work in surroundings or under working conditions which are unsanitary, hazardous or dangerous. These requirements do not apply to the purchases of supplies or materials or articles ordinarily available on the open market, or contracts for transportation or transmission of intelligence.

(F) Rights to Inventions Made Under a Contract or Agreement. If the Federal award meets the definition of "funding agreement" under 37 CFR §401.2 (a) and the recipient or subrecipient wishes to enter into a contract with a small business firm or nonprofit organization regarding the substitution of parties, assignment or performance of experimental, developmental, or research work under that "funding agreement," the recipient or subrecipient must comply with the requirements of 37 CFR Part 401, "Rights to Inventions Made by Nonprofit Organizations and Small Business Firms Under Government Grants, Contracts and Cooperative Agreements," and any implementing regulations issued by the awarding agency.

(G) Clean Air Act (42 U.S.C. 7401–7671q.) and the Federal Water Pollution Control Act (33 U.S.C. 1251–1387), as amended—Contracts and subgrants of amounts in excess of $150,000 must contain a provision that requires the non-Federal award to agree to comply with all applicable standards, orders or regulations issued pursuant to the Clean Air Act (42 U.S.C. 7401–7671q) and the Federal Water Pollution Control Act as amended (33 U.S.C. 1251–1387). Violations must be reported to the Federal awarding agency and the Regional Office of the Environmental Protection Agency (EPA).

(H) Mandatory standards and policies relating to energy efficiency which are contained in the state energy conservation plan issued in compliance with the Energy Policy and Conservation Act (42 U.S.C. 6201).

(I) Debarment and Suspension (Executive Orders 12549 and 12689)—A contract award (see 2 CFR 180.220) must not be made to parties listed on the governmentwide Excluded Parties List System in the System for Award Management (SAM), in accordance with the OMB guidelines at 2 CFR 180 that implement Executive Orders 12549 (3 CFR Part 1986 Comp., p. 189) and 12689 (3 CFR Part 1989 Comp., p. 235), "Debarment and Suspension." The Excluded Parties List System in SAM contains the names of parties debarred, suspended, or otherwise excluded by agencies, as well as parties declared ineligible under statutory or regulatory authority other than Executive Order 12549.

(J) Byrd Anti-Lobbying Amendment (31 U.S.C. 1352)—Contractors that apply or bid for an award of $100,000 or more must file the required certification. Each tier certifies to the tier above that it will not and has not used Federal appropriated funds to pay any person or organization for influencing or attempting to influence an officer or employee of any agency, a member of Congress, officer or employee of Congress, or an employee of a member of Congress in connection with obtaining any Federal contract, grant or any

other award covered by 31 U.S.C. 1352. Each tier must also disclose any lobbying with non-Federal funds that takes place in connection with obtaining any Federal award. Such disclosures are forwarded from tier to tier up to the non-Federal award.

(K) See §200.322 Procurement of recovered materials.

APPENDIX III TO PART 200—INDIRECT (F&A) COSTS IDENTIFICATION AND ASSIGNMENT, AND RATE DETERMINATION FOR INSTITUTIONS OF HIGHER EDUCATION (IHEs)

A. GENERAL

This appendix provides criteria for identifying and computing indirect (or indirect (F&A)) rates at IHEs (institutions). Indirect (F&A) costs are those that are incurred for common or joint objectives and therefore cannot be identified readily and specifically with a particular sponsored project, an instructional activity, or any other institutional activity. See subsection B.1, Definition of Facilities and Administration, for a discussion of the components of indirect (F&A) costs.

1. Major Functions of an Institution

Refers to instruction, organized research, other sponsored activities and other institutional activities as defined in this section:

a. *Instruction* means the teaching and training activities of an institution. Except for research training as provided in subsection b, this term includes all teaching and training activities, whether they are offered for credits toward a degree or certificate or on a non-credit basis, and whether they are offered through regular academic departments or separate divisions, such as a summer school division or an extension division. Also considered part of this major function are departmental research, and, where agreed to, university research.

(1) *Sponsored instruction and training* means specific instructional or training activity established by grant, contract, or cooperative agreement. For purposes of the cost principles, this activity may be considered a major function even though an institution's accounting treatment may include it in the instruction function.

(2) *Departmental research* means research, development and scholarly activities that are not organized research and, consequently, are not separately budgeted and accounted for. Departmental research, for purposes of this document, is not considered as a major function, but as a part of the instruction function of the institution.

b. *Organized research* means all research and development activities of an institution that are separately budgeted and accounted for. It includes:

(1) *Sponsored research* means all research and development activities that are sponsored by Federal and non-Federal agencies and organizations. This term includes activities involving the training of individuals in research techniques (commonly called research training) where such activities utilize the same facilities as other research and development activities and where such activities are not included in the instruction function.

(2) *University research* means all research and development activities that are separately budgeted and accounted for by the institution under an internal application of institutional funds. University research, for purposes of this document, must be combined with sponsored research under the function of organized research.

c. *Other sponsored activities* means programs and projects financed by Federal and non-Federal agencies and organizations which involve the performance of work other than instruction and organized research. Examples of such programs and projects are health service projects and community service programs. However, when any of these activities are undertaken by the institution without outside support, they may be classified as other institutional activities.

d. *Other institutional activities* means all activities of an institution except for instruction, departmental research, organized research, and other sponsored activities, as defined in this section; indirect (F&A) cost activities identified in this Appendix paragraph B, Identification and assignment of indirect (F&A) costs; and specialized services facilities described in §200.468 Specialized service facilities of this Part.

Examples of other institutional activities include operation of residence halls, dining halls, hospitals and clinics, student unions, intercollegiate athletics, bookstores, faculty housing, student apartments, guest houses, chapels, theaters, public museums, and other similar auxiliary enterprises. This definition also includes any other categories of activities, costs of which are "unallowable" to Federal awards, unless otherwise indicated in an award.

2. Criteria for Distribution

a. *Base period.* A base period for distribution of indirect (F&A) costs is the period during which the costs are incurred. The base period normally should coincide with the fiscal year established by the institution, but in any event the base period should be so selected as to avoid inequities in the distribution of costs.

b. *Need for cost groupings.* The overall objective of the indirect (F&A) cost allocation process is to distribute the indirect (F&A) costs described in Section B, Identification and assignment of indirect (F&A) costs, to

CONTRACT PLANS

NORTH 17TH STREET IMPROVEMENTS
ORANGE AVENUE TO AVENUE D

INDEX OF ROADWAY PLANS

SHEET NO.	SHEET DESCRIPTION
1	KEY SHEET
2	GENERAL NOTES
3	SUMMARY OF PAY ITEMS
4	SUMMARY OF QUANTITIES
5	TYPICAL SECTION
6 - 7	HORIZONTAL & VERTICAL CONTROL
8 - 11	PLAN AND PROFILE
12 - 15	MISCELLANEOUS DETAILS
16 - 17	OMITTED
18 - 37	CROSS SECTIONS
38 - 39	SIGNING AND MARKING
40	EROSION CONTROL GENERAL NOTES
41 - 43	EROSION CONTROL
44 - 45	TRAFFIC CONTROL TYPICAL SECTION
46 - 49	UTILITY PLAN / PROFILE
50 - 52	FPUA DETAILS

GOVERNING STANDARDS AND SPECIFICATIONS:
FLORIDA DEPARTMENT OF TRANSPORTATION,
DESIGN STANDARDS LATEST EDITION,
AND STANDARD SPECIFICATIONS FOR ROAD AND
BRIDGE CONSTRUCTION LATEST EDITION,
AS AMENDED BY CONTRACT DOCUMENTS.

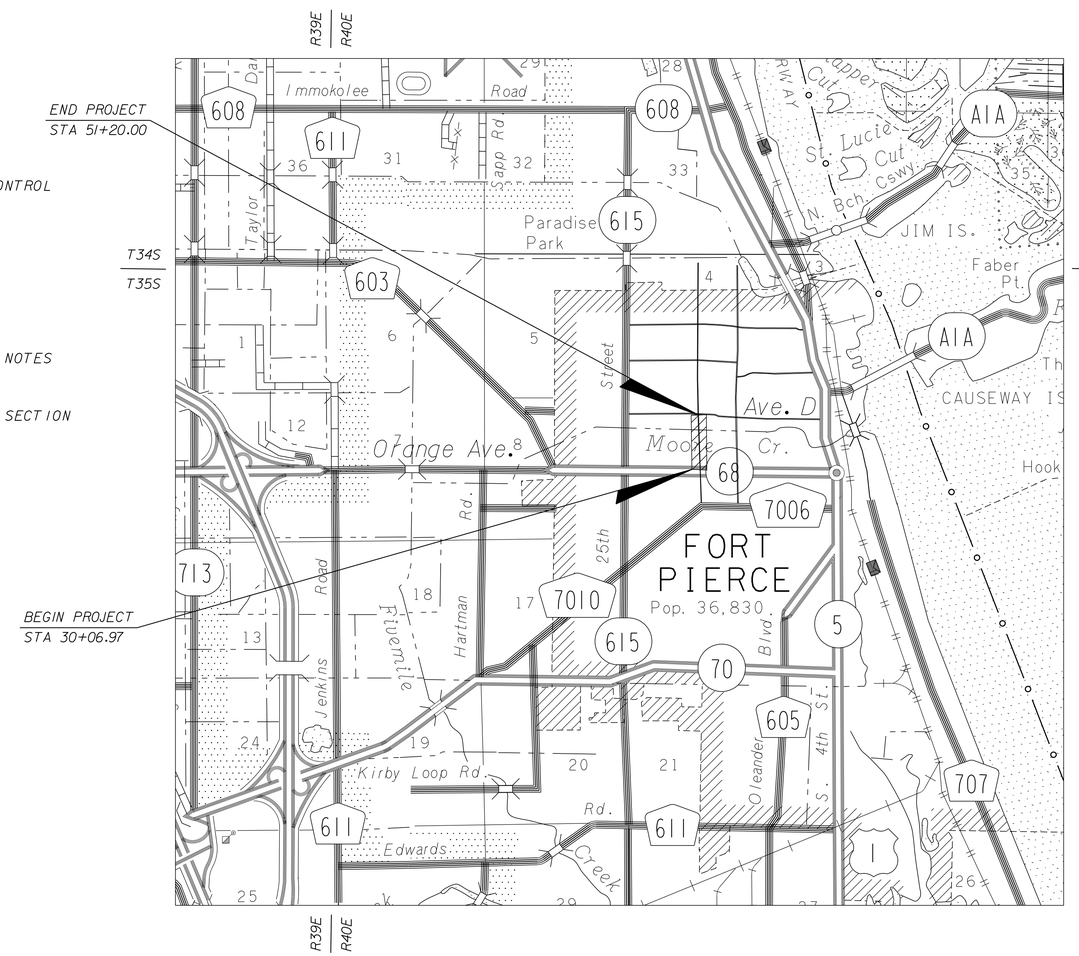

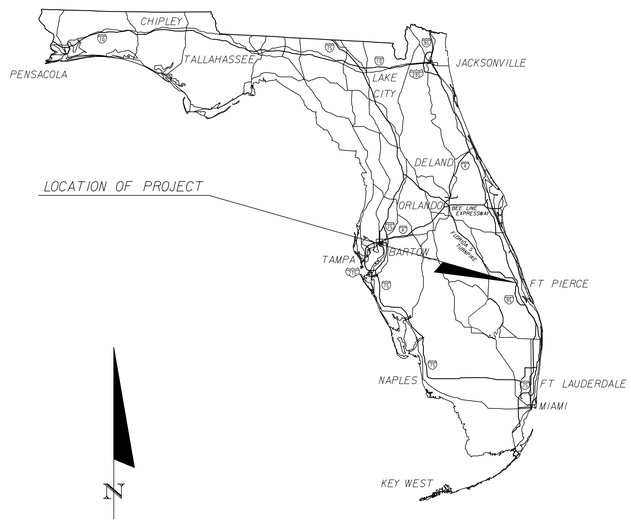

ROADWAY SHOP DRAWINGS
TO BE SUBMITTED TO:

KIMLEY-HORN AND ASSOCIATES, INC.
BRIAN GOOD, P.E.
445 24TH STREET, SUITE 200
VERO BEACH, FLORIDA 32960

PLANS PREPARED BY:

Kimley»Horn

445 24TH STREET, SUITE 200
VERO BEACH, FL 32960
TEL (772) 794-4100
PROJECT NUMBER: 47922003
CERTIFICATE OF AUTHORIZATION: 00000696

ROADWAY PLANS
ENGINEER OF RECORD: BRIAN GOOD, P.E.

P.E. NO.: 56939

NOTE: THE SCALE OF THESE PLANS MAY
HAVE CHANGED DUE TO REPRODUCTION.

PREPARED FOR:
CITY OF FORT PIERCE/
FORT PIERCE REDEVELOPMENT AGENCY

SHEET NO.
1

GENERAL NOTES

1. ALL CONSTRUCTION AND MATERIALS SHALL CONFORM TO APPLICABLE STANDARDS AND SPECIFICATIONS OF THE CITY OF FORT PIERCE, AND FDOT DESIGN STANDARDS, LATEST EDITION.

2. CONSTRUCTION DETAILS SHALL BE IN ACCORDANCE WITH STATE OF FLORIDA DEPARTMENT OF TRANSPORTATION ROADWAY AND TRAFFIC DESIGN STANDARDS, LATEST ISSUE AND CITY OF FORT PIERCE STANDARD CONSTRUCTION DETAILS.

3. THE INFORMATION PROVIDED IN THESE DRAWINGS IS SOLELY TO ASSIST THE CONTRACTOR IN ASSESSING THE NATURE AND EXTENT OF CONDITIONS WHICH WILL BE ENCOUNTERED DURING THE COURSE OF WORK. THE CONTRACTORS ARE DIRECTED, PRIOR TO BIDDING, TO CONDUCT WHATEVER INVESTIGATIONS THEY DEEM NECESSARY TO ARRIVE AT THEIR OWN CONCLUSION REGARDING THE ACTUAL CONDITIONS THAT WILL BE ENCOUNTERED, AND UPON WHICH BIDS WILL BE BASED.

4. LOCATIONS, ELEVATIONS AND DIMENSIONS OF EXISTING UTILITIES AND OTHER FEATURES ARE SHOWN ACCORDING TO THE BEST INFORMATION AVAILABLE AT THE TIME OF THE PREPARATION OF THESE PLANS. THE CONTRACTOR SHALL VERIFY THE LOCATIONS, ELEVATIONS, AND OTHER FEATURES AFFECTING HIS/HER WORK PRIOR TO CONSTRUCTION, AND NOTIFY THE CITY OF FORT PIERCE, ENGINEERING DEPARTMENT IMMEDIATELY WHEN CONFLICT BETWEEN DRAWINGS AND ACTUAL CONDITIONS ARE DISCOVERED. THE CONTRACTOR SHALL WORK AS NEEDED TO AVOID CONFLICT WITH EXISTING UTILITIES (NO ADDITIONAL COST SHALL BE PAID FOR THIS WORK). EXISTING UTILITIES SHALL BE MAINTAINED IN SERVICE DURING CONSTRUCTION UNLESS OTHERWISE APPROVED BY THE UTILITY OWNER.

PRE-TRENCHING IN THE ALIGNMENT AND GRADE OF PROPOSED PIPES, STRUCTURES, CONDUITS AND/OR SUB-GRADE SHALL BE PERFORMED FOURTEEN DAYS IN ADVANCE OF ITS CONSTRUCTION. THE CONTRACTOR SHALL PROVIDE UNDERGROUND UTILITY OWNERS AND THE CITY WITH A FOURTEEN DAY ADVANCE NOTICE OF ANY CONFLICT WITH PROPOSED CONSTRUCTION. PAYMENT FOR PRE-TRENCHING, SURVEY, AND BACKFILLING SHALL BE INCLUDED IN THE UNIT COST OF THE RELATED BID ITEM FOR WORK BEING DONE.

5. THE CONTRACTOR SHALL COORDINATE WITH UTILITIES TO ARRANGE RELOCATION AND TEMPORARY SUPPORT OF UTILITY FEATURES, ETC. AS NECESSARY TO COMPLETE THE WORK.

6. IT SHALL BE THE CONTRACTOR'S RESPONSIBILITY TO LOCATE AND PROTECT ANY AND ALL EXISTING UTILITIES ON THIS PROJECT. THE CONTRACTOR WILL RECEIVE NO DIRECT PAYMENT TO SUPPORT AND/OR PROTECT ANY AND ALL UTILITIES. PAYMENT FOR THIS WORK SHALL BE INCLUDED IN THE UNIT COST OF THE RELATED BID ITEM FOR WORK BEING DONE.

7. THE CONTRACTOR SHALL GIVE AT (2) BUSINESS DAYS NOTICE TO UTILITY COMPANIES TO PROVIDE FOR THE LOCATION OF EXISTING UNDERGROUND UTILITIES IN ADVANCE OF CONSTRUCTION. CONTACT SUNSHINE STATE ONE AT 1-800-432-4770.

8. THE CONTRACTOR IS REQUIRED TO OBTAIN ALL APPLICABLE CONSTRUCTION PERMITS PRIOR TO START OF CONSTRUCTION.

9. THE CONTRACTOR SHALL NOTIFY THE CITY OF FORT PIERCE, ENGINEERING DEPARTMENT AND CITY'S FIELD REPRESENTATIVE, AT LEAST 48 HOURS PRIOR TO CONSTRUCTION.

10. THE CONTRACTOR SHALL CONTACT THE CITY OF FORT PIERCE, ENGINEERING DEPARTMENT AND CITY'S FIELD REPRESENTATIVE IMMEDIATELY OF ANY CONFLICT ARISING DURING CONSTRUCTION OF ANY IMPROVEMENTS SHOWN ON THESE DRAWINGS.

11. B.M. DATA IS NATIONAL GEODETIC VERTICAL DATUM OF 1929 (NGVD-'29).

12. EXISTING SECTION CORNERS AND 1/4 SECTION CORNERS, AND OTHER LAND MARKERS OR MONUMENTS LOCATED WITHIN PROPOSED CONSTRUCTION ARE TO BE REFERENCED BY THE CONTRACTOR PRIOR TO CONSTRUCTION AND RESET AFTER CONSTRUCTION USING REGISTERED LAND SURVEYOR LICENSED IN THE STATE OF FLORIDA.

13. STORM SEWER PIPE LENGTHS SHOWN ARE APPROXIMATE, AND MAY BE ADJUSTED AS REQUIRED UPON APROVAL BY THE CITY OF FORT PIERCE, ENGINEERING DEPARTMENT.

14. INSTALLATION OF ALL STORM SEWERS, INLETS, MANHOLES AND APPURTENANCES SHALL BE IN ACCORDANCE WITH THE REQUIREMENTS OF THE CITY OF FORT PIERCE, ENGINEERING DEPARTMENT AS INDICATED ON THE DRAWINGS. ALL REINFORCED CONCRETE PIPE SHALL BE CLASS III PIPE.

15. ALL CATCH BASINS AND PIPE INVERTS SHALL BE AS INDICATED ON THE DRAWINGS.

16. CONTRACTOR SHALL ADJUST ALL UTILITY LIDS AND COVERS TO FINISHED GRADE AS REQUIRED.

17. ALL COMPLETED DRAINAGE STRUCTURES SHALL BE PROTECTED FROM CONTAMINATION BY SILT AND CONSTRUCTION DEBRIS. THE CONTRACTOR SHALL PLACE PLYWOOD ON, OR FILTER FABRIC BETWEEN FRAME AND INLET GRATE UNTIL CONSTRUCTION OPERATIONS ARE COMPLETED. ALL DRAINAGE STRUCTURES (EXISTING AND PROPOSED) WITHIN PROJECT LIMITS SHALL BE CLEANED PRIOR TO FINAL ACCEPTANCE. PAYMENT FOR THIS WORK SHALL BE INCLUDED IN THE UNIT COST OF THE RELATED BID ITEM FOR WORK BEING DONE.

18. ALL ROAD CROSSINGS ARE OPEN CUT UNLESS OTHERWISE NOTED ON THE DRAWINGS.

19. THE CONTRACTOR SHALL REPLACE ALL PAVING, STABILIZING EARTH, DRIVEWAYS SIDEWALKS, ETC. WITH THE SAME TYPE OF MATERIAL THAT WAS REMOVED DURING CONSTRUCTION OR AS DIRECTED BY THE CITY OF FORT PIERCE FIELD ENGINEER.

20. THE CONTRACTOR SHALL NOT ENCROACH INTO PRIVATE PROPERTY WITH PERSONNEL, MATERIAL OR EQUIPMENT WITHOUT WRITTEN PERMISSION FROM THE PROPERTY OWNER.

21. THE CONTRACTOR SHALL BE RESPONSIBLE FOR DAMAGE, REMOVAL OR MODIFICATION, ACCIDENTALLY OR PURPOSELY, CAUSED TO ANY IRRIGATION SYSTEMS, PRIVATE OR PUBLIC. THE CONTRACTOR SHALL REPLACE ANY DAMAGED, REMOVED, OR MODIFIED IRRIGATION PIPES, SPRINKLER HEADS OR OTHER PERTINENT APPURTENANCES AT NO ADDITIONAL COST.

22. REGARDING MAIL BOXES, WALLS, FENCES, SECURITY GATE TRACKING, OR OTHER PRIVATE PROPERTY OR IMPROVEMENTS THAT SHALL BE TEMPORARILY RELOCATED AND REPLACED, THE CONTRACTOR SHALL COORDINATE WITH THE APPROPRIATE OWNER. ANY AND ALL COSTS ASSOCIATED WITH COORDINATING, REMOVING, AND REPLACING ANY PROPERTY ITEMS SHALL BE INCLUDED IN THE UNIT COST OF THE RELATED BID ITEM FOR WORK BEING DONE.

23. CONTRACTOR SHALL PROVIDE MAINTENANCE OF TRAFFIC IN ACCORDANCE WITH FDOT INDEX 600 SERIES, MUTCD AND THESE PLANS. THE CONTRACTOR SHALL MAINTAIN AT ALL TIMES VEHICULAR AND PEDESTRIAN ACCESS TO ALL RESIDENCES AND/OR BUSINESSES.

24. NO TREES ARE TO BE REMOVED OR RELOCATED WITHOUT PRIOR APPROVAL FROM THE CITY OF FORT PIERCE FIELD ENGINEER (CITY PERMIT REQUIRED FOR ANY TREE REMOVAL).

25. COMPLETE 'AS-BUILT' INFORMATION RELATIVE TO LOCATION, SIZE AND DEPTH OF NEW PIPES, MANHOLES, INLETS, ETC., SHALL BE ACCURATELY RECORDED BY THE CONTRACTOR AND SUBMITTED (SIGNED AND SEALED BY A FLORIDA CERTIFIED P.LS.) TO THE CITY OF FORT PIERCE, ENGINEERING DEPARTMENT PRIOR TO FINAL ACCEPTANCE OF THE WORK. ALL RECORD INFORMATION ON EXISTING UTILITY CROSSINGS ENCOUNTERED DURING CONSTRUCTION, INCLUDING BUT NOT LIMITED TO PIPES, INLETS, MANHOLE, ETC., SHALL BE RECORDED BY A FLORIDA REGISTERED SURVEYOR AND SHOWN ON THE RECORD DRAWINGS. THE COST OF SIGNED AND SEALED AS-BUILTS SHALL BE INCLUDED IN OVERALL BID AND NO ADDITIONAL COMPENSATION WILL BE ALLOWED.

26. THE CONTRACTOR SHALL BE RESPONSIBLE FOR MAINTAINING THE INTEGRITY OF AND MAKING THE REPAIRS OF EXISTING PAVEMENT, SIDEWALKS, PIPES, CONDUITS, CURBS, CABLES, ETC., WHETHER OR NOT SHOWN ON THE PLANS DAMAGED AS A RESULT OF THE CONTRACTORS OPERATIONS AND/OR THOSE OF HIS SUBCONTRACTORS, AND SHALL RESTORE THEM PROMPTLY AT NO ADDITIONAL EXPENSE TO THE OWNER OR THE CITY OF FORT PIERCE. CONTRACTOR SHALL REPORT ANY DAMAGE TO SIDEWALK, DRIVEWAY, ETC., PRIOR TO BEGINNING WORK IN ANY AREA.

27. ALL DRAINAGE PIPES SHALL BE APPROVED BY CITY OF FORT PIERCE ENGINEERING DEPARTMENT. THE CONTRACTOR SHALL CONSTRUCT A FILTER FABRIC JACKET AT ALL PROPOSED STORM SEWER JOINTS AS PER FDOT INDEX 280. COST OF FILTER FABRIC JACKET SHALL BE INCLUDED IN UNIT PIPE COSTS.

28. EXISTING DRAINAGE STRUCTURES IN CONFLICT WITH PROPOSED DRAINAGE STRUCTURES SHALL BE REMOVED UNLESS OTHERWISE NOTED. ALL OTHER EXISTING DRAINAGE STRUCTUES WITHIN CONSTRUCTION LIMITS SHALL BE REMOVED UNLESS OTHERWISE NOTED. REMOVAL OF EXISTING DRAINAGE STRUCTURE IS TO INCLUDE ASSOCIATED PIPING TO DOWNSTREAM STRUCTURE OR TO TIE IN WITHIN PROPOSED STORM SEWER PIPING.

29. NO EXISTING BASE MATERIAL REMOVED IN EXCAVATION SHALL BE REUSED AS PROPOSED BASE MATERIAL.

30. STAGING AND MATERIAL STORAGE SHALL NOT BE CONDUCTED ON ABUTTING PRIVATE PROPERTY WITHOUT WRITTEN APPROVAL FROM THE OWNER. STAGING AND STORAGE SHALL BE CONDUCTED WITHIN PUBLIC R/W AND/OR CONSTRUCTION EASEMENTS (ACCESS LICENSE AGREEMENTS).

31. THE CONTRACTOR SHALL REFER TO THE LANDSCAPE PLAN TO DETERMINE IMPACTS TO EXISTING TREES AND VEGETATION. ALL TREES AND VEGETATION DESIGNATED TO REMAIN SHALL BE PROTECTED BY THE CONTRACTOR AT NO ADDITIONAL EXPENSE TO THE OWNER OR THE CITY.

32. PROPOSED DRAINAGE STRUCTURES HAVE BEEN SIZED BASED UPON THE AVAILABLE UTILITY INFORMATON. THE CONTRACTOR SHALL VERIFY THAT PROPOSED DIMENSIONS WILL ACCOMMODATE THE EXISTING AND PROPOSED STORM SEWER CONFIGURATION PRIOR TO SUBMITTING SHOP DRAWINGS. DRAINAGE CONNECTIONS TO EXISTING STRUCTURES SHALL BE CORE DRILLED AT THE SPECIFIED INVERT.

33. EXISTING UTILITY CONTACT INFORMATION:

UTILITY COMPANY	CONTACT	PHONE NUMBER	ADDRESS
AT&T	MARK GUTIERREZ	772-460-4443	3300 OKEECHOBEE RD. FORT PIERCE, FL 34947
COMCAST CABLE	ANTHONY SPRINGSTEEL	561-804-0973	10435 IRONWOOD ROAD PALM BEACH GARDENS, FL 33410
FLORIDA GAS TRANSMISSION - FORT PIERCE	JOSEPH SANCHEZ	407-838-7171	601 S LAKE DESTINY ROAD SUITE 450 MAITLAND, FL 32794
FORT PIERCE UTILITY AUTHORITY ELECTRIC / GAS	PAUL LAGUERRE	772-466-1600	P.O.BOX 3191 FORT PIERCE, FL 34947
FORT PIERCE UTILITY AUTHORITY WATER / SEWER	WILLIAM THIESS	772-466-1600	P.O.BOX 3191 FORT PIERCE, FL 34947

34. EROSION CONTROL MEASURES SHALL BE TAKEN BY CONTRACTOR DURING CONSTRUCTION AS PER FDOT STANDARD INDEX #102:

A. SILT FENCE SHALL BE INSTALLED ALONG THE ENTIRE PERIMETER OF THE PROJECT ADJACENT TO ANY SOIL DISTURBING ACTIVITIES.

B. ALL DRAINAGE STRUCTURES ARE TO BE PROTECTED DURING CONSTRUCTION PER STANDARD INDEX #102.

C. ALL FENCING, GRADING, SIGNING AND SODDING SHALL BE MAINTAINED DURING THE CONTRACT LIFE. ALL DAMAGED WORK SHALL BE RESTORED AT NO COST TO THE CITY.

35. DETECTABLE WARNING SURFACES SHALL CONSIST OF A.D.A. TRUNCATED DOME CONCRETE PAVING UNITS (4"X8"X2-3/8"). WARNING SURFACES SHALL EXTEND TWO FEET FROM BACK OF CURB AND SPAN RAMP RUN WIDTH. WARNING SURFACE COLOR SHALL BE "BRICK RED".

36. ROADWAY AND LANDSCAPE IMPROVEMENTS HAVE BEEN PREPARED UNDER DIRECTION THAT ALL ABOVE GROUND ELECTRICAL DISTRIBUTION SERVICES WILL BE RELOCATED UNDERGROUND.

37. ALL EXISTING MAILBOXES WITHIN LIMITS OF CONSTRUCTION SHALL BE RELOCATED IN ACCORDANCE WITH CITY AND POSTAL CODES.

38. NON-STRUCTURAL CONCRETE UTILIZED IN CURB AND GUTTER, SIDEWALK AND URBAN FLARED TURNOUT CONSTRUCTION SHALL CONSIST OF 3000 PSI FIBER REINFORCED MIX.

REVISIONS

DATE	BY	DESCRIPTION	DATE	BY	DESCRIPTION

Kimley»Horn
BRIAN A. GOOD, P.E.
P.E. LICENSE NUMBER 56939
445 24TH STREET, SUITE 200
VERO BEACH, FL 32960
(772) 794-4100
CERTIFICATE OF AUTHORIZATION: 00000696

CITY OF FORT PIERCE/
FORT PIERCE REDEVELOPMENT AGENCY

NORTH 17TH STREET IMPROVEMENTS
ORANGE AVENUE TO AVENUE D

GENERAL NOTES

SHEET NO. 2

mike.forman 10/19/2016 8:43:13 AM K:\VRB_Roadway\47922003\cadd\Phase 1\rdwy\GENRD01.dgn

SUMMARY OF PAY ITEMS

PAY ITEM NO.	DESCRIPTION	UNIT	QUANTITY
	ROADWAY		
101-1	MOBILIZATION (NON-UTILITIES)	LS	1
101-2A	MATERIAL TESTING (NON-UTILITIES)	LS	1
102-1	MAINTENANCE OF TRAFFIC	LS	1
104-2	PREVENTION, CONTROL & ABATEMENT OF EROSION AND WATER POLLUTION	LS	1
108-1	AS-BUILTS (NON-UTILITIES)	LS	1
110-1-1	CLEARING & GRUBBING	AC	2.62
110-7-4	MAILBOX (RELOCATE)	EA	30
120-1	REGULAR EXCAVATION	CY	2,655
120-6	EMBANKMENT	CY	75
160-4	STABILIZATION, TYPE "B"	SY	7,531
285-706	CEMENTED COQUINA LBR 100 (8")	SY	6,183
285-714	CEMENTED COQUINA LBR 100 (14")	SY	47
286-1	ASPHALT TURNOUT CONSTRUCTION	SY	255
327-70-1	MILLING EXISTING ASPHALT PAVEMENT (1")	SY	64
334-1-13A	SUPERPAVE ASPHALTIC CONCRETE (SP-9.5) (TRAFFIC C)	TN	347
334-1-13B	SUPERPAVE ASPHALTIC CONCRETE (SP-12.5) (TRAFFIC C)	TN	516
425-1-201	INLETS (CURB TYPE 9) (<10')	EA	17
425-1-203	INLETS (CURB TYPE 9) (J BOTTOM) (<10')	EA	1
425-1-529	INLETS (DITCH BOTTOM) (MODIFY)	EA	1
425-1-910	INLETS (CLOSED FLUME)	EA	1
425-2-041	MANHOLES (P-7) (<10')	EA	2
430-171-125	CONCRETE PIPE CULVERT (18" RCP)	LF	905
430-175-218	CONCRETE PIPE CULVERT (14"X23" ERCP)	LF	411
515-1-2	PIPE HANDRAIL - GUIDERAIL (ALUMINUM)	LF	9
520-1-10	CONCRETE CURB & GUTTER (TYPE F)	LF	4,463
520-2-4	CONCRETE CURB (TYPE D)	LF	69
520-2-9	CONCRETE CURB (HEADER)	LF	303
522-1	CONCRETE SIDEWALK, 4" THICK	SY	2,216
522-2	CONCRETE SIDEWALK, 6" THICK	SY	1,350
526-1-2A	ARCHITECTURAL PAVERS (ROADWAY)	SF	901
527-2	DETECTABLE WARNINGS	SF	233
550-10-210	FENCING, TYPE B, (0.0-5.0'), STANDARD FEATURES	LF	429
550-10-919	FENCING, SPECIAL TYPE, 0.0-5.0', SPECIAL	LF	88
550-60-211	FENCE GATE, TYPE B, 4' SINGLE, 0.0-6.0' OPENING	EA	2
550-60-222	FENCE GATE, TYPE B, 4' DOUBLE, 6.1-12.0' OPENING	EA	1
550-30-223	FENCE GATE, TYPE B, 4' DOUBLE, 12.1-18.0' OPENING	EA	1
570-1-2	PERFORMANCE TURF (SOD)	SY	3,256
	SIGNING AND MARKING		
700-20-11	SINGLE POST SIGN (FURNISH & INSTALL) (LESS THAN 12 SF)	AS	19
706-3	RETRO-REFLECTIVE PAVEMENT MARKER	EA	290
711-11-121	THERMOPLASTIC (STANDARD) (WHITE) (SOLID) (6")	LF	4,427
711-11-121	THERMOPLASTIC (STANDARD) (WHITE) (SOLID) (12")	LF	322
711-11-125	THERMOPLASTIC (STANDARD) (WHITE) (SOLID) (24")	LF	178
711-11-170	THERMOPLASTIC (STANDARD) (WHITE) (ARROWS)	EA	4
711-11-221	THERMOPLASTIC (STANDARD) (YELLOW) (SOLID) (6")	LF	4,506
711-11-224	THERMOPLASTIC (STANDARD) (YELLOW) (SOLID) (18")	LF	268
	UTILITIES		
1	DEMOLITION - WATER FACILITIES	LS	1
2	MOBILIZATION (W / WW)	LS	1
3	CONSTRUCTION LAYOUT / RECORD DRAWINGS (WATER / WASTEWATER)	LS	1
4	BACTERIOLOGICAL SAMPLING POINT	EA	5
5	6" PVC WATER MAIN	LF	1,900
6	6" DUCTILE IRON WATER MAIN	LF	80
7	FIRE HYDRANT	EA	2
8	DUCTILE IRON UTILITY FITTINGS	TN	1.5
9	1" WATER SERVICE (SINGLE SHORT)	EA	20
10	1" WATER SERVICE (DOUBLE SHORT)	EA	1
11	1" WATER SERVICE (SINGLE LONG)	EA	20
12	1" WATER SERVICE (DOUBLE LONG)	EA	1
13	6" RESILIENT SEAT GATE VALVE ASSEMBLY	EA	4
14A	6"X6" TAPPING SLEEVE AND VALVE	EA	1
14B	8"X6" TAPPING SLEEVE AND VALVE	EA	1
15	6" MECHANICAL JOINT BELL RESTRAINT	EA	20
16	6" MEGALUG RESTRAINT	EA	48
17	6" WATER MAIN DEFLECTION	EA	3
18	6" WATERMAIN TIE-IN AT NORTH & SOUTH SIDE OF CANAL (W/O DEADMAN)	EA	2
19	6" WATER MAIN TIE-IN AT AVE C (WITH DEADMAN)	EA	1
20	6" WATER MAIN REMOVAL IN NON-UTILITY AREAS	LF	1,635
21	6" WATER MAIN REMOVAL IN UTILITIY AREAS	LF	325
22	DEMOLITION (WASTEWATER)	LS	1
23	8" PVC, SEWER MAIN (0'-6')	LF	1,234
24	8" PVC, SEWER MAIN (>6'-8')	LF	231
25	8" DUCTILE IRON SEWER MAIN (0'-6')	LF	100
26	PRECAST 4 FT CONCRETE SANITARY MANHOLES (0'-6')	EA	5
27	PRECAST 4 FT CONCRETE SANITARY MANHOLES (>6'-8')	EA	1
28	6" PVC SEWER SERVICE (SINGLE, 0'-6')	EA	41
29	6" PVC SEWER SERVICE (SINGLE, >6'-8')	EA	4
30	6" DIP SEWER SERVICE (>0'-6')	EA	2
31	SANITARY SEWER/STORM CONFLICT STRUCTURE AND SANITARY PIPING	EA	1
32	STAINLESS STEEL-BACKED SEWER FITTINGS	EA	5
101-2A	MATERIAL TESTING (UTILITIES)	LS	1
630-2-11	CONDUIT (F&I) (4") (SCH 40)	LF	456

PAY ITEM FOOTNOTES

101-2A, 101-2B — THE CONTRACTOR SHALL RETAIN THE SERVICES OF A TESTING LABORATORY TO PROVIDE TESTING SERVICES AS REQUIRED BY THE PROJECT SPECIFICATIONS. ALL INSPECTIONS, TEST OR APPROVALS REQUIRED BY LAWS OR REGULATIONS SHALL BE PERFORMED. THE TESTING LABORATORY SHALL MAIL COPIES OF ALL TEST REPORTS INDEPENDENTLY TO THE CITY, ENGINEER AND CONTRACTOR. ALL TESTING COSTS ASSOCIATED WITH INSTALLATION OF THE PROPOSED UTILITY IMPROVEMENTS SHALL BE INCORPORATED WITH PAY ITEM 101-2B, ALL OTHER TESTING COSTS SHALL BE INCORPORATED INTO PAY ITEM 101-2A.

102-1 — COST OF MAINTENANCE OF TRAFFIC SHALL INCLUDE BUT NOT BE LIMITED TO CONSTRUCTION SIGNS, BUSINESS SIGNS, TEMPORARY BARRICADES, VARIABLE MESSAGE SIGNS, TEMPORARY REFLECTIVE PAVEMENT MARKERS, TEMPORARY PAVEMENT MARKINGS, INCIDENTAL TEMPORARY PAVEMENT, DUST CONTROL, ANY TEMPORARY DRAINAGE ELEMENTS BEYOND WHAT IS SPECIFIED IN THE CONTRACT DOCUMENTS, AND ALL ITEMS NECESSARY TO MEET THE MAINTENANCE OF TRAFFIC REQUIREMENTS OF THE FLORIDA DEPARTMENT OF TRANSPORTATION AS PRESCRIBED IN SECTION 600 OF THE FDOT STANDARD INDEXES.

104-2 — COST TO INCLUDE, BUT NOT LIMITED TO, DESILTING ALL EXISTING AND PROPOSED DRAINAGE STRUCTURES AND CULVERTS WITHIN THE PROJECT LIMITS PRIOR TO FINAL ACCEPTANCE. COST TO INCLUDE ALL NECESSARY EROSION CONTROL MEASURES AND MATERIALS.

110-1-1 — COST TO INCLUDE, BUT NOT LIMITED TO, REMOVAL AND DISPOSAL OF EXISTING SIDEWALK IN CONFLICT WITH THE PROPOSED IMPROVEMENTS.

285-706, 285-714 — THE COST OF THE PRIME COAT SHALL BE INCLUDED IN THE PRICE OF THE BASE.

286-1 — COST TO INCLUDE, BUT NOT LIMITED TO, BASE MATERIAL AND ASPHALTIC CONCRETE.

334-1-13X — THE COST OF THE TACK COAT SHALL BE INCLUDED IN THE PRICE OF THE ASPHALT.

520-2-9 — COST OF HEADER CURB TO INCLUDE STEEL REINFORCEMENT.

526-1-2A — COST TO INCLUDE BUT NOT LIMITED TO, PAVERS, BEDDING SAND, 6" THICK CONC. SUB-SLAB, LABOR AND ALL INCIDENTAL ITEMS NECESSARY.

522-1 — COST OF PEDESTRIAN RAMPS AND WARNING DOMES TO BE INCLUDED. ALL SIDEWALK JOINTS ARE TO BE SAWCUT AS PER FDOT SPECIFICATION. TOOLED JOINTS ARE NOT PERMITTED.

570-1-2 — COST OF PERFORMANCE TURF TO INCLUDE SOD, FERTILIZER, MOWING, WATERING, TOOLS, EQUIPMENT, LABOR AND ALL INCIDENTAL ITEMS NECESSARY. TURF TO MATCH EXISTING ADJACENT R/W TURF.

1 - 32 — PAY ITEM FOOTNOTES REGARDING ALL PROPOSED UTILITY IMPROVEMENTS ARE REFERENCED UNDER SECTION 01550 MEASUREMENT AND PAYMENT OF BID DOCUMENTS.

REVISIONS

DATE	BY	DESCRIPTION	DATE	BY	DESCRIPTION

Kimley»Horn
BRIAN A. GOOD, P.E.
P.E. LICENSE NUMBER 56939
445 24TH STREET, SUITE 200
VERO BEACH, FL 32960
(772) 794-4100
CERTIFICATE OF AUTHORIZATION: 00000696

CITY OF FORT PIERCE/
FORT PIERCE REDEVELOPMENT AGENCY

NORTH 17TH STREET IMPROVEMENTS
ORANGE AVENUE TO AVENUE D

SUMMARY OF PAY ITEMS

SHEET NO. 3

mike.forman 10/19/2016 8:43:14 AM K:\VRB_Roadway\47922003\cadd\Phase 1\rdwy\SUMQRD01.dgn

SUMMARY OF FENCE

N. 17TH STREET		SIDE	FENCE LENGTH					SWING GATE			FIELD BOOK REFERENCE
			TYPE 'B'			PICKET VINYL	PICKET WOODEN	SINGLE	DOUBLE		
FROM STATION	TO STATION		6' HEIGHT	5' HEIGHT	4' HEIGHT	4' HEIGHT	4' HEIGHT	4' WIDTH	18' WIDTH	24' WIDTH	
33+87.30	33+87.67	RT	0.0	12.0	0.0	0.0	0.0	0.0	0.0	0.0	
33+99.67	34+24.21	RT	0.0	0.0	25.0	0.0	0.0	0.0	0.0	0.0	
34+53.97	34+90.13	RT	0.0	0.0	0.0	0.0	36.0	0.0	0.0	0.0	
35+45.36	36+38.52	RT	0.0	0.0	126.0	0.0	0.0	1.0	0.0	0.0	
36+19.07	36+57.14	LT	0.0	0.0	38.0	0.0	0.0	0.0	0.0	0.0	
36+77.28	37+65.37	RT	0.0	0.0	105.0	0.0	0.0	0.0	0.0	0.0	
37+57.94	37+86.02	LT	0.0	0.0	28.0	0.0	0.0	0.0	0.0	0.0	
36+83.66	39+14.32	RT	0.0	0.0	31.0	0.0	0.0	0.0	0.0	0.0	
39+07.78	39+32.85	LT	0.0	0.0	0.0	25.0	0.0	0.0	0.0	0.0	
39+37.62	39+57.67	LT	0.0	0.0	0.0	27.0	0.0	0.0	1.0	0.0	
47+31.19	47+40.25	RT	0.0	0.0	9.0	0.0	0.0	0.0	0.0	0.0	
48+93.76	49+73.38	RT	0.0	0.0	55.0	0.0	0.0	1.0	0.0	1.0	
TOTAL:			0.0	12.0	417.0	52.0	36.0	2.0	1.0	1.0	

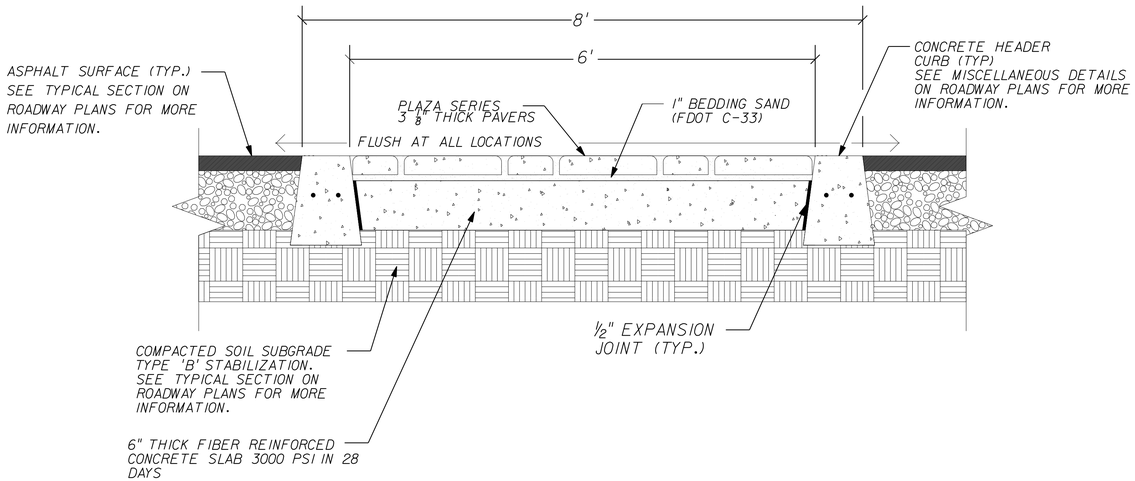

-SAND-SWEEP JOINTS USING POLYMERIC SAND JOINING MATERIAL
JOINTS SHALL NOT EXCEED 1/8"
-SEAL WITH PROTECTIVE SEALANT OR MANUFACTURER'S APPROVED EQUAL

CROSSWALK PAVING DETAIL - SECTION

SECTION N.T.S.

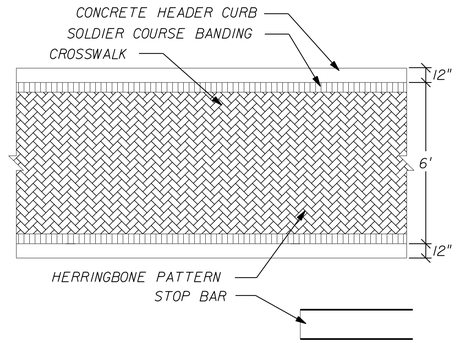

PAVER INFORMATION:
MANUFACTURED BY HANSON PAVER PRODUCTS
PAVER: PLAZA SERIES 4"X8"X3 1/8"
COLOR: RED/TAN/CHARCOAL (SOLID BRICK COLORS)
FIELD PATTERN: 45° HERRINGBONE
BANDING PATTERN: SOLDIER COURSE (RED)

CROSSWALK PAVING DETAIL - PLAN

PLAN N.T.S.

REVISIONS					
DATE	BY	DESCRIPTION	DATE	BY	DESCRIPTION

Kimley»Horn
BRIAN A. GOOD, P.E.
P.E. LICENSE NUMBER 56939
445 24TH STREET, SUITE 200
VERO BEACH, FL 32960
(772) 794-4100
CERTIFICATE OF AUTHORIZATION: 00000696

CITY OF FORT PIERCE/
FORT PIERCE REDEVELOPMENT AGENCY

NORTH 17TH STREET IMPROVEMENTS
ORANGE AVENUE TO AVENUE D

SUMMARY OF QUANTITIES

SHEET NO. 4

mike.forman 10/19/2016 8:43:37 AM K:\VRB_Roadway\47922003\cadd\Phase 1\rdwy\SPDTRD07.dgn

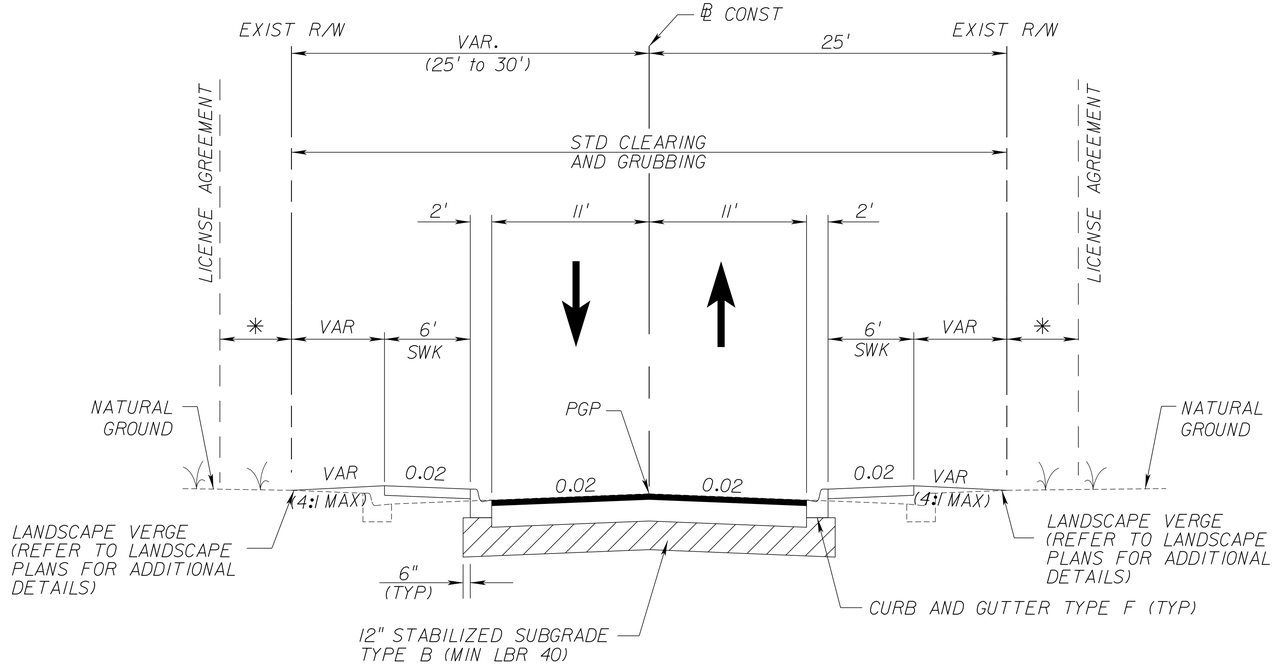

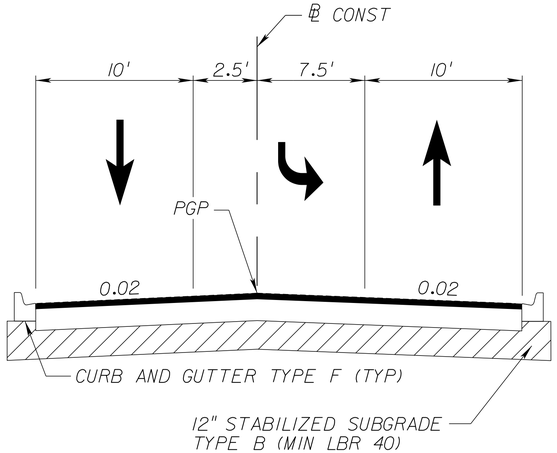

STA 30+48.47 TO STA 32+60.00

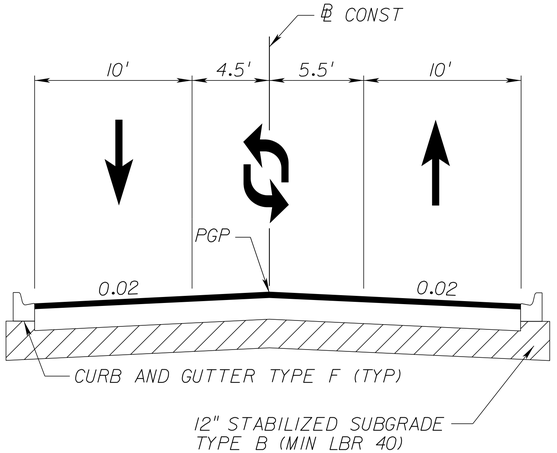

STA 48+30.00 TO STA 51+05.24

* SEE PLANS FOR ADDITIONAL INFORMATION REGARDING WIDTHS AND LOCATIONS.

PAVEMENT DESIGN

TYPE SP 9.5 STRUCTURAL COURSE (TRC)(1")
TYPE SP 12.5 STRUCTURAL COURSE (TRC)(1.5")
CEMENTED COQUINA LBR 100 (8")
STABILIZED SUBGRADE TYPE 'B' (12")

FDOT PAVEMENT DESIGN

TYPE SP 9.5 STRUCTURAL COURSE (TRC)(1")
TYPE SP 12.5 STRUCTURAL COURSE (TRC)(2")
CEMENTED COQUINA LBR 100 (14")
STABILIZED SUBGRADE TYPE 'B' (12")

PAVEMENT MILLING

MILL EXISTING ASPHALT PAVEMENT (1")

PAVEMENT RESURFACING

TYPE SP 9.5 STRUCTURAL COURSE (TRC)(1")

POSTED SPEED = 25 MPH
DESIGN SPEED = 30 MPH

NORTH 17TH STREET

℄ STA 30+48.47 TO STA 51+05.24

REVISIONS					
DATE	BY	DESCRIPTION	DATE	BY	DESCRIPTION

Kimley»Horn
BRIAN A. GOOD, P.E.
P.E. LICENSE NUMBER 56939
445 24TH STREET, SUITE 200
VERO BEACH, FL 32960
(772) 794-4100
CERTIFICATE OF AUTHORIZATION: 00000696

CITY OF FORT PIERCE/
FORT PIERCE REDEVELOPMENT AGENCY

NORTH 17TH STREET IMPROVEMENTS
ORANGE AVENUE TO AVENUE D

TYPICAL SECTION

SHEET NO. 5

mike.forman 10/19/2016 8:43:42 AM K:\VRB_Roadway\47922003\cadd\Phase 1\rdwy\typsrd01.dgn

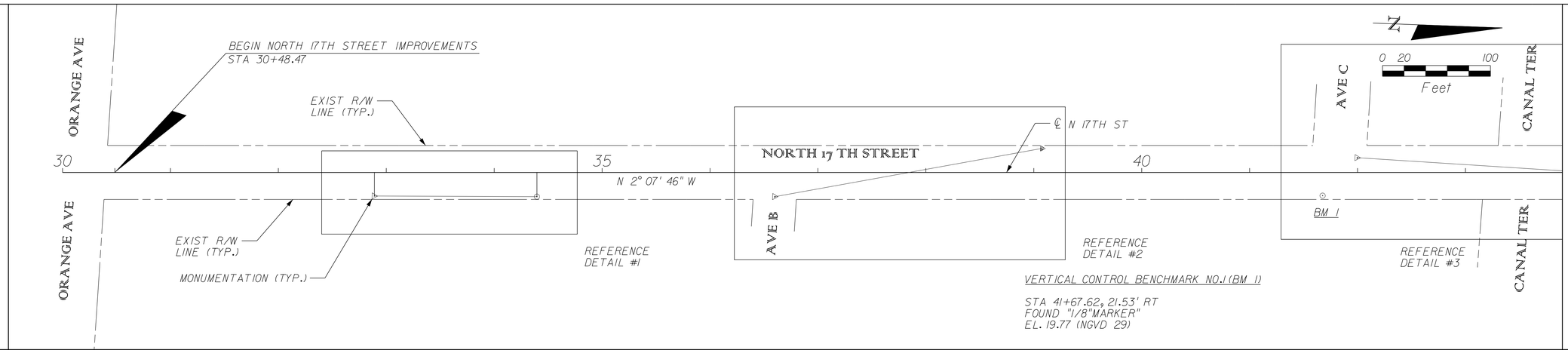

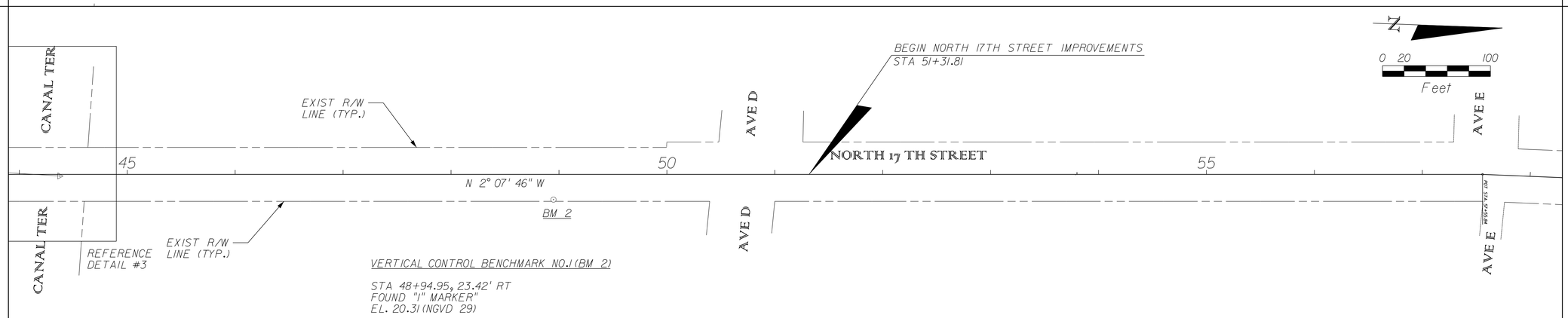

INTENTIONALLY LEFT BLANK

REVISIONS					
DATE	BY	DESCRIPTION	DATE	BY	DESCRIPTION

Kimley»Horn
BRIAN A. GOOD, P.E.
P.E. LICENSE NUMBER 56939
445 24TH STREET, SUITE 200
VERO BEACH, FL 32960
(772) 794-4100
CERTIFICATE OF AUTHORIZATION: 00000696

CITY OF FORT PIERCE/
FORT PIERCE REDEVELOPMENT AGENCY

NORTH 17TH STREET IMPROVEMENTS
ORANGE AVENUE TO AVENUE D

HORIZONTAL & VERTICAL CONTROL

SHEET NO. 6

mike.forman 10/19/2016 8:43:43 AM K:\VRB_Roadway\47922003\cadd\Phase 1\rdwy\PLANHVC01.dgn

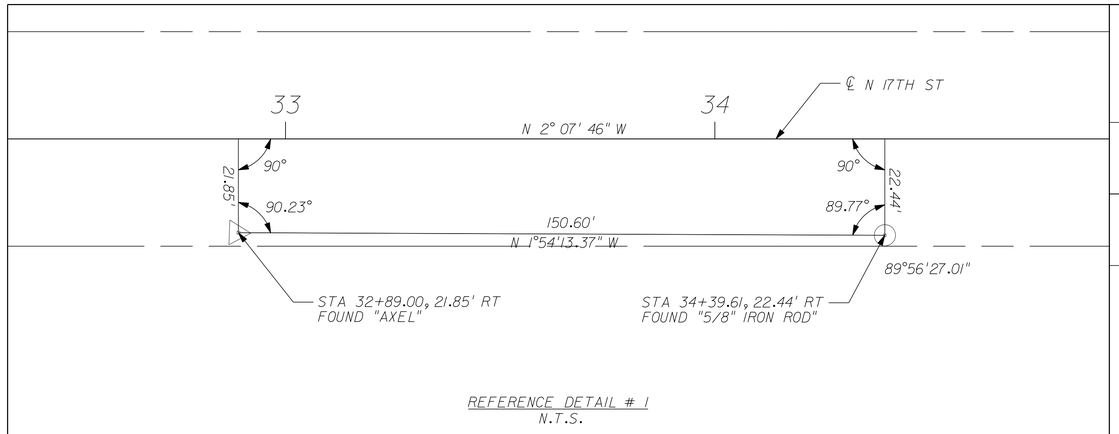

REFERENCE DETAIL # 1
N.T.S.

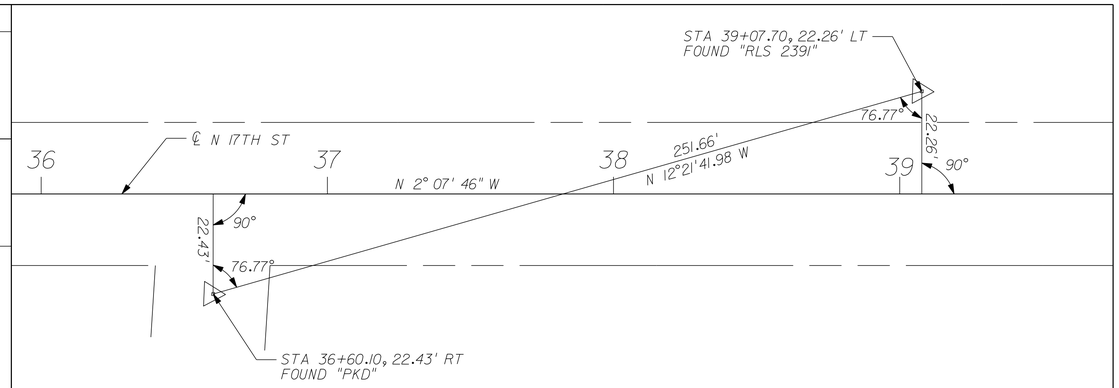

REFERENCE DETAIL # 2
N.T.S.

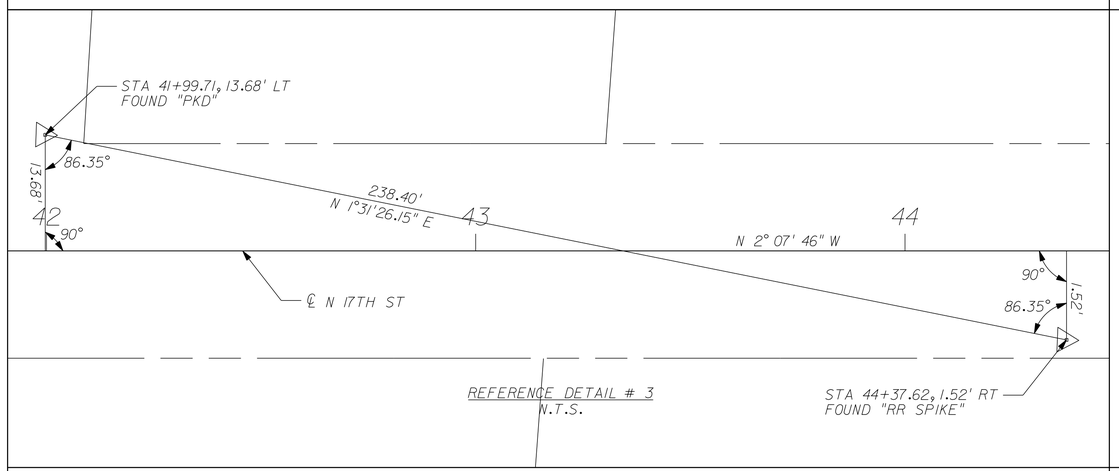

REFERENCE DETAIL # 3
N.T.S.

INTENTIONALLY LEFT BLANK

INTENTIONALLY LEFT BLANK

INTENTIONALLY LEFT BLANK

REVISIONS					
DATE	BY	DESCRIPTION	DATE	BY	DESCRIPTION

Kimley»Horn
BRIAN A. GOOD, P.E.
P.E. LICENSE NUMBER 56939
445 24TH STREET, SUITE 200
VERO BEACH, FL 32960
(772) 794-4100
CERTIFICATE OF AUTHORIZATION: 00000696

CITY OF FORT PIERCE/
FORT PIERCE REDEVELOPMENT AGENCY

NORTH 17TH STREET IMPROVEMENTS
ORANGE AVENUE TO AVENUE D

HORIZONTAL & VERTICAL CONTROL

SHEET NO.
7

NOTES:

1. THE CONTRACTOR SHALL COORDINATE CONDUIT INSTALLATIONS WITH FPUA REPRESENTATIVE. FPUA SHALL PROVIDE CONDUIT FOR INSTALLATION. CONTRACTOR TO INSTALL CONDUIT TO PROVIDE 12" VERTICAL SEPARATION BETWEEN EXISTING AND PROPOSED UTILITIES.

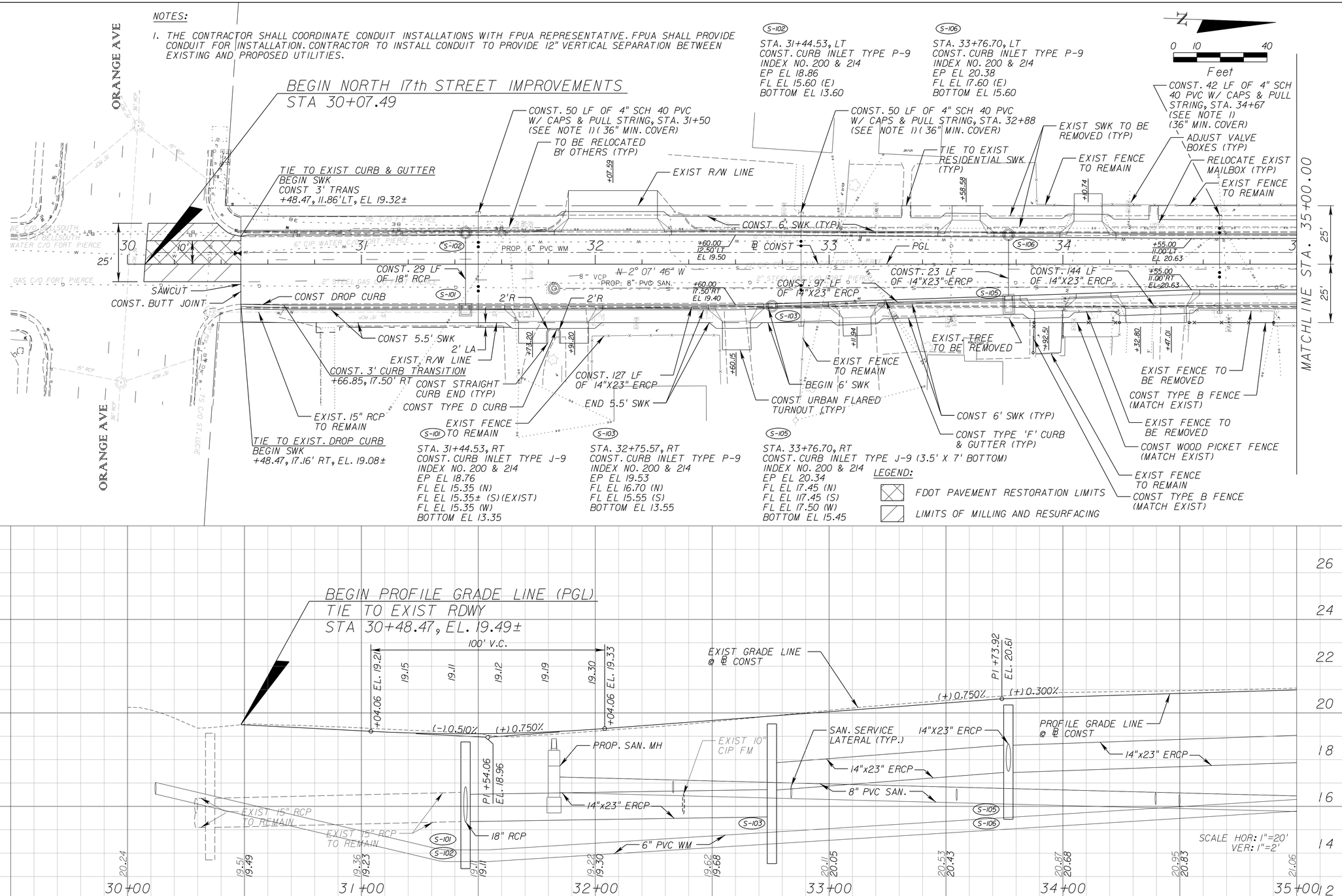

REVISIONS					
DATE	BY	DESCRIPTION	DATE	BY	DESCRIPTION

Kimley»Horn
BRIAN A. GOOD, P.E.
P.E. LICENSE NUMBER 56939
445 24TH STREET, SUITE 200
VERO BEACH, FL 32960
(772) 794-4100
CERTIFICATE OF AUTHORIZATION: 00000696

CITY OF FORT PIERCE/
FORT PIERCE REDEVELOPMENT AGENCY

NORTH 17TH STREET IMPROVEMENTS
ORANGE AVENUE TO AVENUE D

PLAN AND PROFILE

SHEET NO. 8

mike.forman 10/19/2016 8:43:48 AM K:\VRB_Roadway\47922003\cadd\Phase I\rdwy\PLPRRD01.dgn

NOTES:

1. THE CONTRACTOR SHALL COORDINATE CONDUIT INSTALLATIONS WITH FPUA REPRESENTATIVE. FPUA SHALL PROVIDE CONDUIT FOR INSTALLATION. CONTRACTOR TO INSTALL CONDUIT TO PROVIDE 12" VERTICAL SEPARATION BETWEEN EXISTING AND PROPOSED UTILITIES.

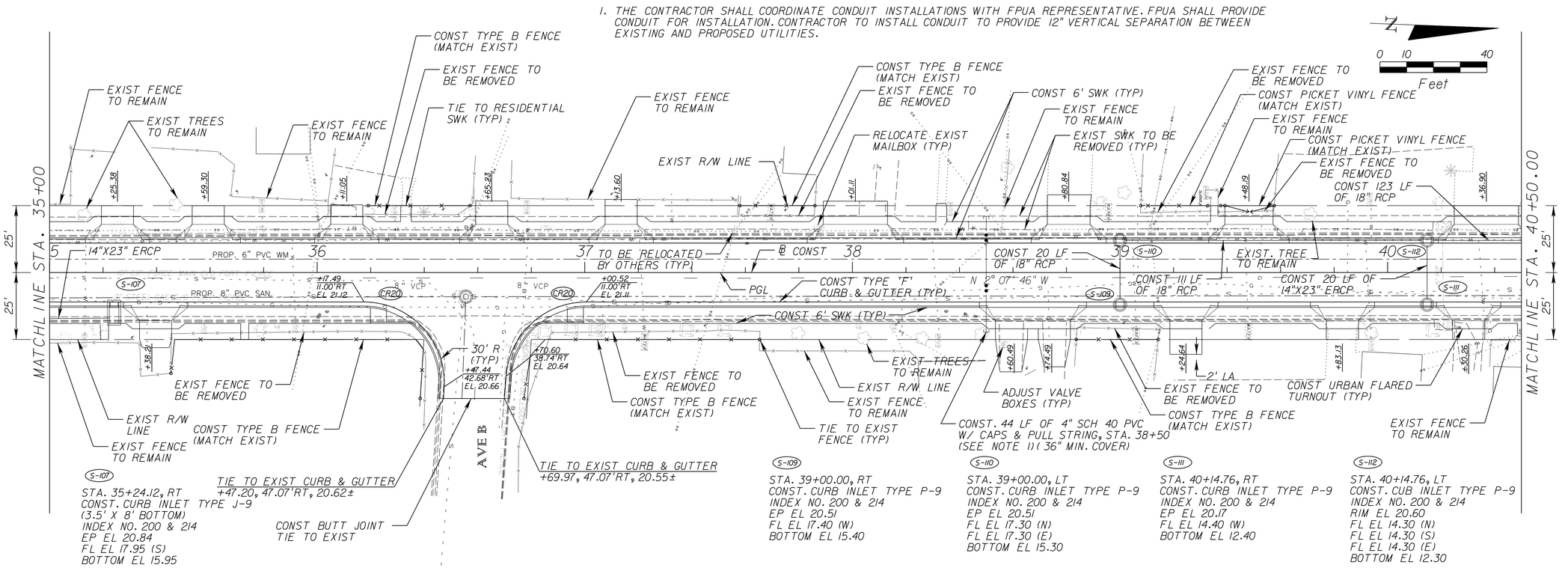

S-107
STA. 35+24.12, RT
CONST. CURB INLET TYPE J-9
(3.5' X 8' BOTTOM)
INDEX NO. 200 & 214
EP EL 20.84
FL EL 17.95 (S)
BOTTOM EL 15.95

S-109
STA. 39+00.00, RT
CONST. CURB INLET TYPE P-9
INDEX NO. 200 & 214
EP EL 20.51
FL EL 17.40 (W)
BOTTOM EL 15.40

S-110
STA. 39+00.00, LT
CONST. CURB INLET TYPE P-9
INDEX NO. 200 & 214
EP EL 20.51
FL EL 17.30 (N)
FL EL 17.30 (E)
BOTTOM EL 15.30

S-111
STA. 40+14.76, RT
CONST. CURB INLET TYPE P-9
INDEX NO. 200 & 214
EP EL 20.17
FL EL 14.40 (W)
BOTTOM EL 12.40

S-112
STA. 40+14.76, LT
CONST. CUB INLET TYPE P-9
INDEX NO. 200 & 214
RIM EL 20.60
FL EL 14.30 (N)
FL EL 14.30 (S)
FL EL 14.30 (E)
BOTTOM EL 12.30

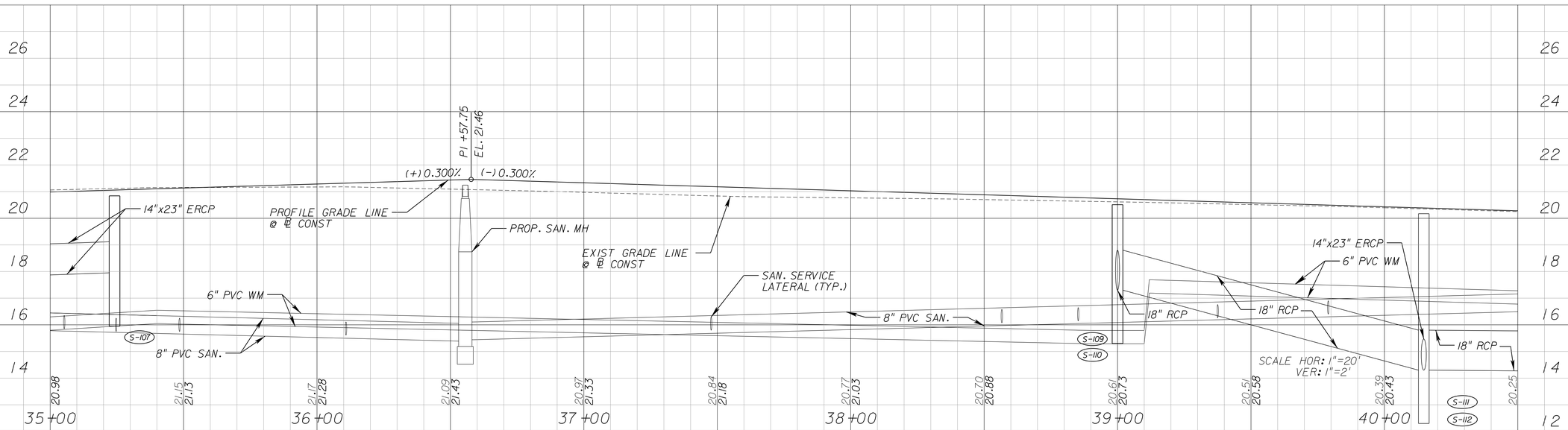

REVISIONS					
DATE	BY	DESCRIPTION	DATE	BY	DESCRIPTION

Kimley»Horn
BRIAN A. GOOD, P.E.
P.E. LICENSE NUMBER 56939
445 24TH STREET, SUITE 200
VERO BEACH, FL 32960
(772) 794-4100
CERTIFICATE OF AUTHORIZATION: 00000696

CITY OF FORT PIERCE/
FORT PIERCE REDEVELOPMENT AGENCY

NORTH 17TH STREET IMPROVEMENTS
ORANGE AVENUE TO AVENUE D

PLAN AND PROFILE

SHEET NO. 9

mike.forman 10/19/2016 8:43:49 AM K:\VRB_Roadway\47922003\cadd\Phase I\rdwy\PLPRRD02.dgn

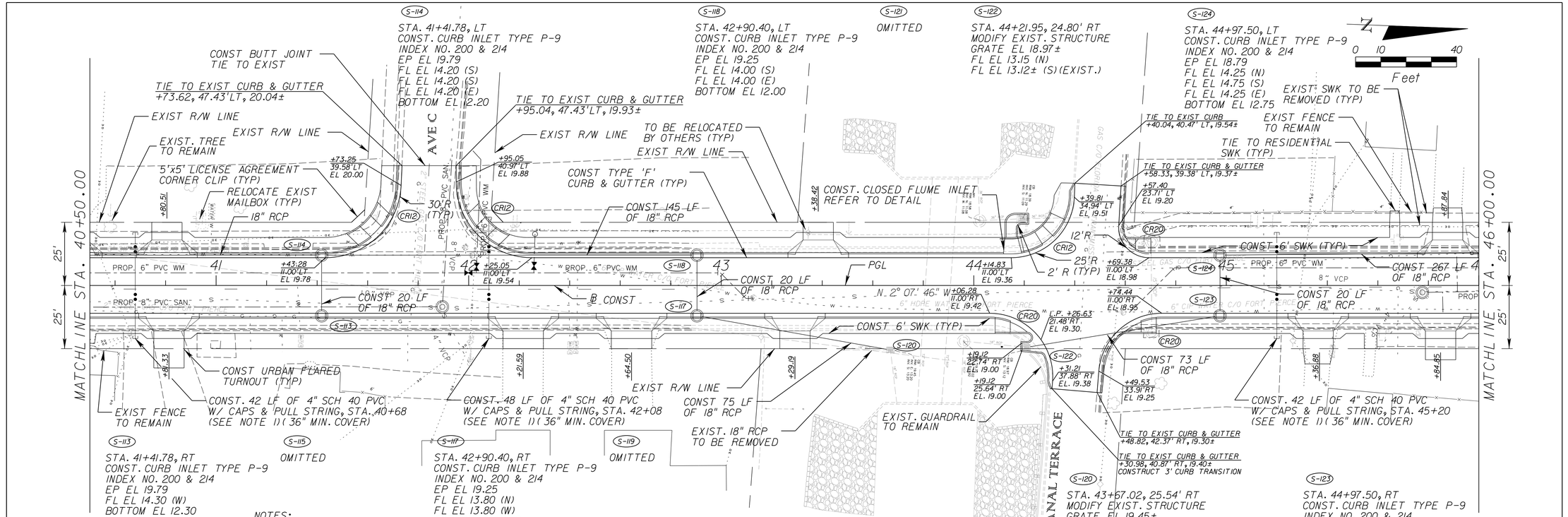

NOTES:

1. THE CONTRACTOR SHALL COORDINATE CONDUIT INSTALLATIONS WITH FPUA REPRESENTATIVE. FPUA SHALL PROVIDE CONDUIT FOR INSTALLATION. CONTRACTOR TO INSTALL CONDUIT TO PROVIDE 12" VERTICAL SEPARATION BETWEEN EXISTING AND PROPOSED UTILITIES.

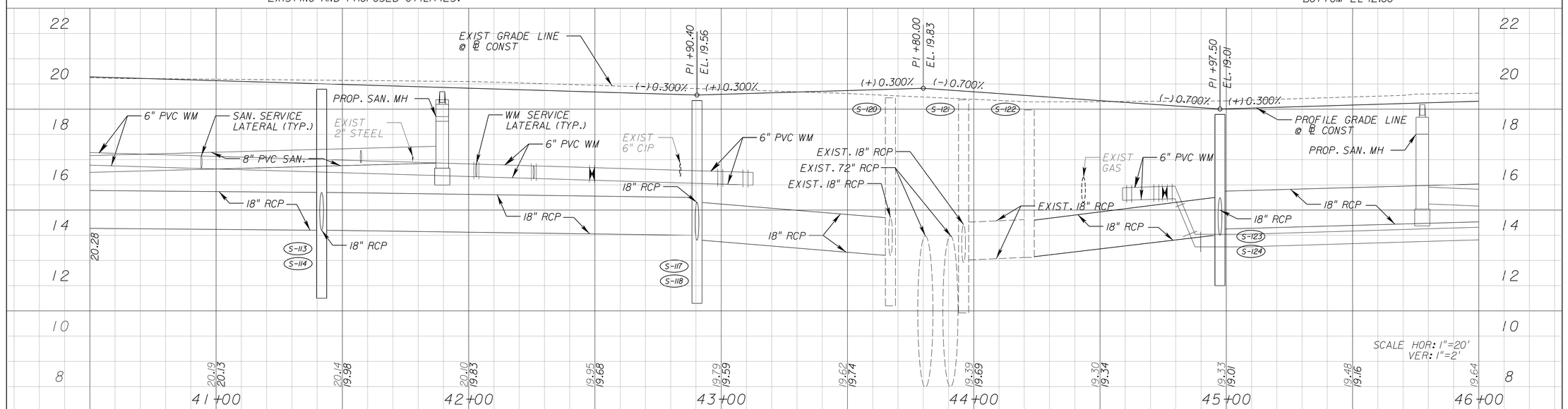

REVISIONS					
DATE	BY	DESCRIPTION	DATE	BY	DESCRIPTION

Kimley»Horn
BRIAN A. GOOD, P.E.
P.E. LICENSE NUMBER 56939
445 24TH STREET, SUITE 200
VERO BEACH, FL 32960
(772) 794-4100
CERTIFICATE OF AUTHORIZATION: 00000696

CITY OF FORT PIERCE/
FORT PIERCE REDEVELOPMENT AGENCY

NORTH 17TH STREET IMPROVEMENTS
ORANGE AVENUE TO AVENUE D

PLAN AND PROFILE

SHEET NO. 10

mike.forman 10/19/2016 8:43:51 AM K:\VRB_Roadway\47922003\cadd\Phase I\rdwy\PLPRRD03.dgn

NOTES:

1. THE CONTRACTOR SHALL COORDINATE CONDUIT INSTALLATIONS WITH FPUA REPRESENTATIVE. FPUA SHALL PROVIDE CONDUIT FOR INSTALLATION. CONTRACTOR TO INSTALL CONDUIT TO PROVIDE 12" VERTICAL SEPARATION BETWEEN EXISTING AND PROPOSED UTILITIES.

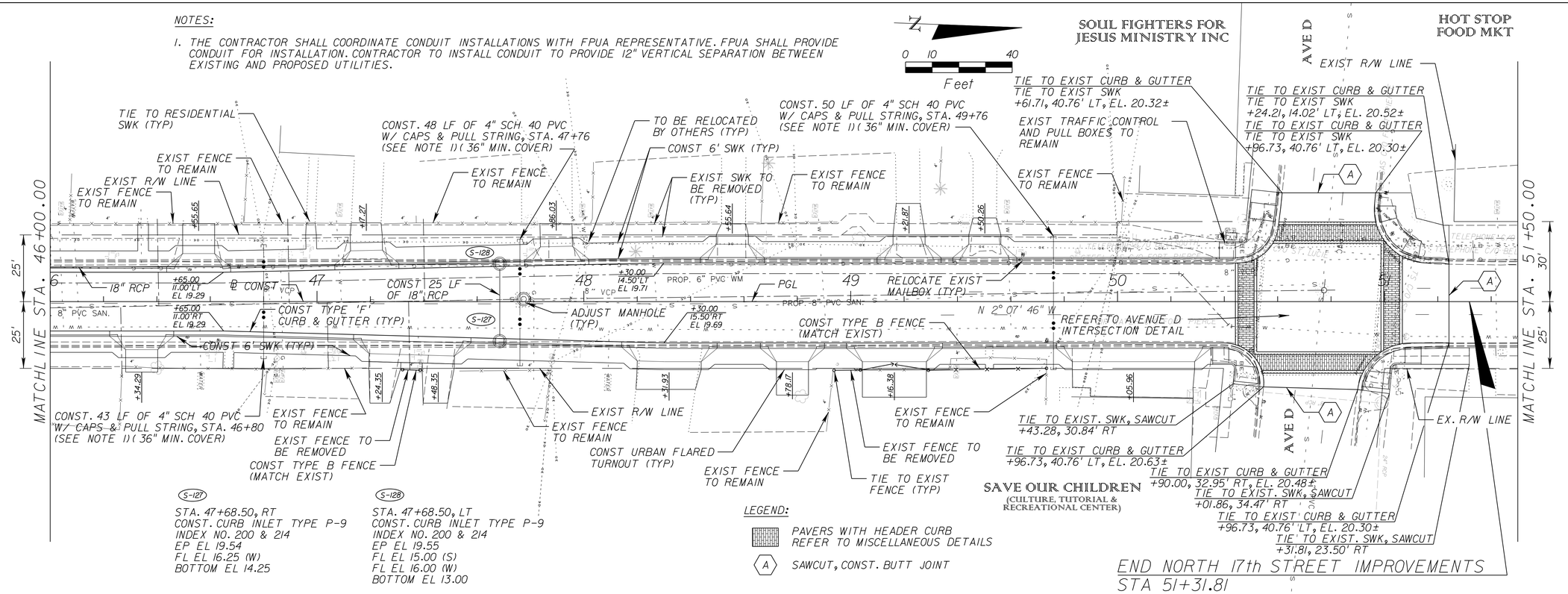

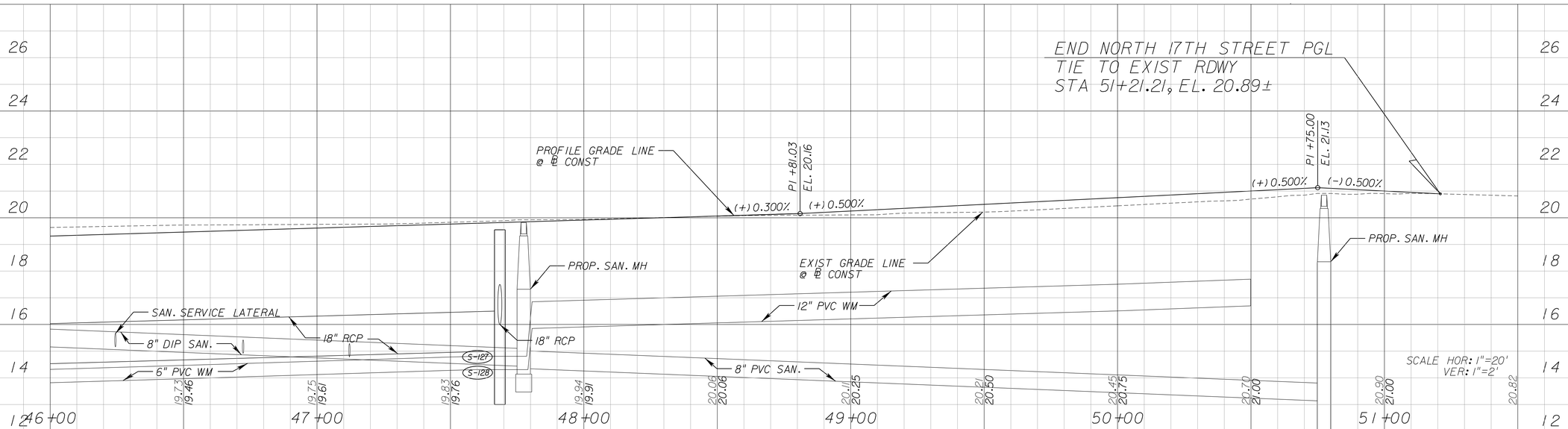

REVISIONS					
DATE	BY	DESCRIPTION	DATE	BY	DESCRIPTION

Kimley»Horn
BRIAN A. GOOD, P.E.
P.E. LICENSE NUMBER 56939
445 24TH STREET, SUITE 200
VERO BEACH, FL 32960
(772) 794-4100
CERTIFICATE OF AUTHORIZATION: 00000696

CITY OF FORT PIERCE/
FORT PIERCE REDEVELOPMENT AGENCY

NORTH 17TH STREET IMPROVEMENTS
ORANGE AVENUE TO AVENUE D

PLAN AND PROFILE

SHEET NO.
11

mike.forman 10/19/2016 8:43:53 AM K:\VRB_Roadway\47922003\cadd\Phase 1\rdwy\PLPRRD04.dgn

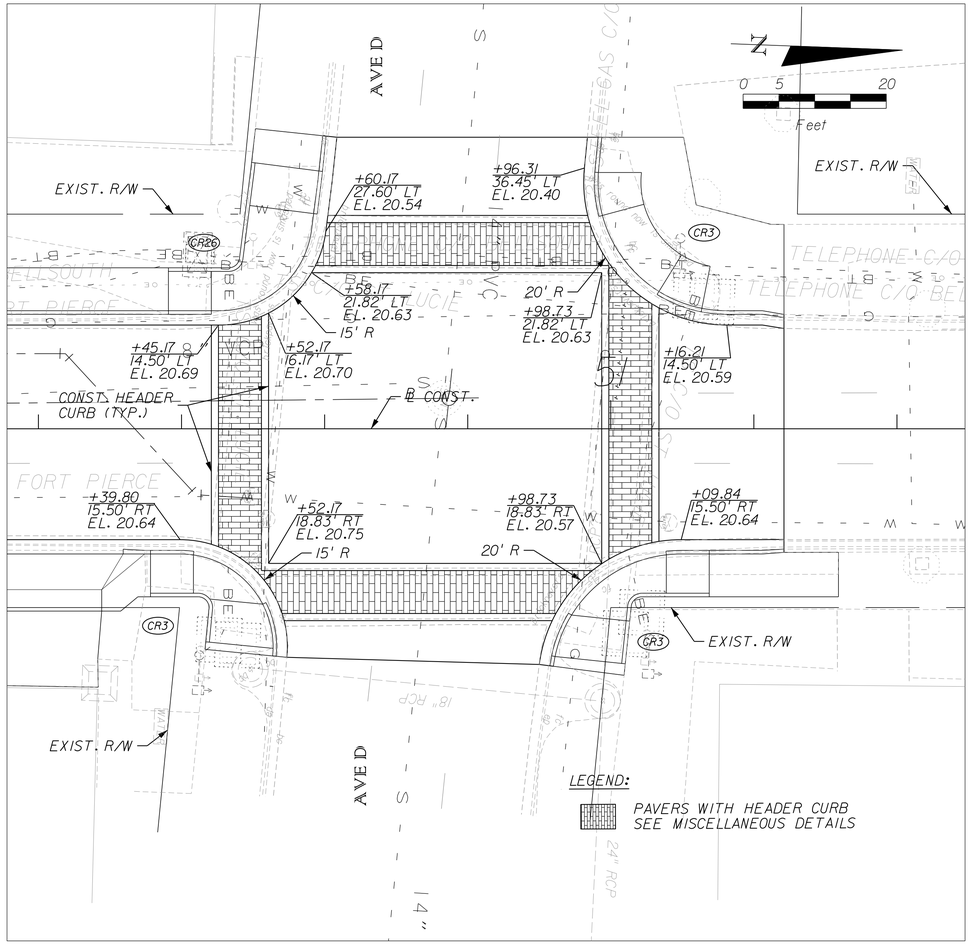

NORTH 17TH STREET / AVENUE D INTERSECTION DETAIL

N.T.S.

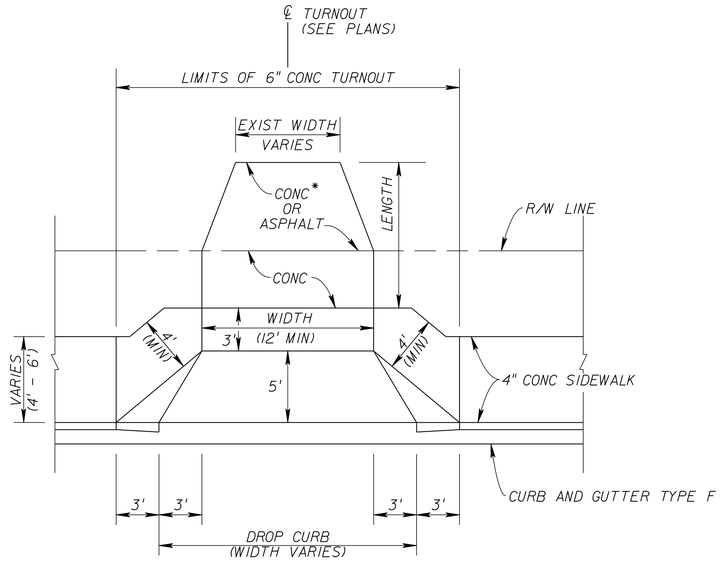

* - MATERIAL CLASSIFICATION & QUANTITY DESCRIBED IN SUMMARY OF TURNOUT TABLE

URBAN FLARED TURNOUT - PLAN VIEW

N.T.S.

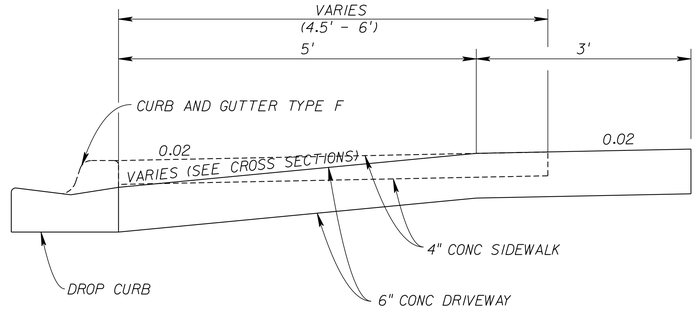

URBAN FLARED TURNOUT - PROFILE

N.T.S.

NOTES:
1. COST OF DROP CURB TO BE INCLUDED IN THE COST OF PARENT CURB.
2. CONCRETE SHALL CONSIST OF 3000 PSI FIBER REINFORCED MIX.
3. MINIMUM URBAN FLARED TURNOUT GRADE IS 7.00%.
MAXIMUM URBAN FLARED TURNOUT GRADE IS 9.90%. REFER TO DRIVEWAY CROSS SECTIONS FOR SPECIFIC GRADE DESIGNATION.

REVISIONS					
DATE	BY	DESCRIPTION	DATE	BY	DESCRIPTION

Kimley»Horn
BRIAN A. GOOD, P.E.
P.E. LICENSE NUMBER 56939
445 24TH STREET, SUITE 200
VERO BEACH, FL 32960
(772) 794-4100
CERTIFICATE OF AUTHORIZATION: 00000696

CITY OF FORT PIERCE/
FORT PIERCE REDEVELOPMENT AGENCY

NORTH 17TH STREET IMPROVEMENTS
ORANGE AVENUE TO AVENUE D

MISCELLANEOUS DETAILS

SHEET NO. 12

mike.forman 10/19/2016 8:43:55 AM K:\VRB_Roadway\47922003\cadd\Phase 1\rdwy\SPDTR001.dgn

SUMMARY OF TURNOUTS

N. 17TH STREET STATION	SIDE	WIDTH (FT)	LENGTH (FT)	CONCRETE AREA (SY) CONCRETE SIDEWALK (6" THICK)		ASPHALT AREA (SY) TYPE SP 12.5 STR. CRS. (TRAF. C) (2") CEMENTED COQUINA LBR100 (5")		FIELD BOOK REFERENCE
				PLAN	FINAL	PLAN	FINAL	
31+73.20	RT	15.0	7.0	18.0		8.0		
31+91.20	RT	15.0	7.0	18.0		8.0		
32+07.59	LT	38.0	9.0	54.0		27.4		
32+60.15	RT	12.0	9.0	20.0		12.0		
33+11.94	RT	12.0	5.0	20.0		6.0		
33+58.58	LT	12.0	3.0	25.0		0.0		
33+92.51	RT	12.0	15.0	23.0		16.0		
34+10.74	LT	12.0	9.0	32.0		0.0		
34+32.80	RT	13.0	3.0	21.0		0.0		
34+47.01	RT	13.0	4.0	21.0		0.0		
35+25.38	LT	12.0	4.0	26.0		0.0		
35+38.21	RT	12.0	7.0	26.0		4.0		
35+59.30	LT	12.0	4.0	26.0		0.0		
36+11.05	LT	12.0	4.0	26.0		0.0		
36+65.23	LT	12.0	6.0	26.0		2.0		
37+13.60	LT	12.0	6.0	26.0		3.0		
38+01.11	LT	24.0	6.0	46.0		0.0		
38+60.49	RT	14.0	16.0	23.0		14.0		
38+74.49	RT	14.0	14.0	23.0		11.0		
38+80.84	LT	16.0	8.0	38.0		0.0		
39+24.64	RT	12.0	10.0	26.0		7.0		
39+48.19	LT	18.0	4.0	34.0		0.0		
39+83.13	RT	12.0	4.0	26.0		0.0		
40+30.26	RT	12.0	4.0	26.0		0.0		
40+36.90	LT	24.0	4.0	42.0		0.0		
40+80.51	LT	12.0	4.0	26.0		0.0		
40+81.33	RT	12.0	12.0	26.0		10.0		
42+21.59	RT	16.0	4.0	31.0		0.0		
42+64.50	RT	16.0	4.0	31.0		0.0		
43+29.19	RT	12.0	4.0	26.0		0.0		
43+38.42	LT	12.0	4.0	26.0		0.0		
45+36.88	RT	12.0	10.0	33.0		0.0		
45+84.85	RT	12.0	8.0	26.0		6.0		
45+87.84	LT	12.0	10.0	33.0		0.0		
46+34.29	RT	12.0	5.0	26.0		2.0		
46+55.65	LT	12.0	8.0	31.0		0.0		
47+17.27	LT	12.0	7.0	30.0		0.0		
47+24.35	RT	16.0	15.0	22.0		14.0		
47+48.35	RT	16.0	15.0	21.0		15.0		
47+86.03	LT	12.0	6.0	28.0		0.0		
48+31.93	RT	24.0	7.0	50.0		0.0		
48+55.64	LT	12.0	5.0	26.0		0.0		
48+78.17	RT	12.0	10.0	21.0		13.0		
49+16.38	RT	24.0	10.0	31.0		27.0		
49+21.87	LT	12.0	12.0	35.0		0.0		
49+50.26	LT	12.0	7.0	29.0		0.0		
50+05.96	RT	46.0	10.0	50.0		49.0		
TOTAL				1350.0	0.0	254.4	0.0	

NOTES:

1. STATIONING REFERS TO ℄ OF 13TH STREET.
2. REFER TO URBAN FLARED TURNOUT DETAIL FOR ADDITIONAL INFORMATION.
3. ASPHALT TURNOUT CONSTRUCTION (ASPHALT AREA) EXTENDS FROM EXISTING RIGHT-OF-WAY TO EXISTING GRADE AS DELINEATED WITHIN PLAN & PROFILE AND CROSS SECTION SHEETS.

REVISIONS					
DATE	BY	DESCRIPTION	DATE	BY	DESCRIPTION

Kimley»Horn
BRIAN A. GOOD, P.E.
P.E. LICENSE NUMBER 56939
445 24TH STREET, SUITE 200
VERO BEACH, FL 32960
(772) 794-4100
CERTIFICATE OF AUTHORIZATION: 00000696

CITY OF FORT PIERCE/
FORT PIERCE REDEVELOPMENT AGENCY

NORTH 17TH STREET IMPROVEMENTS
ORANGE AVENUE TO AVENUE D

MISCELLANEOUS DETAILS

SHEET NO.
13

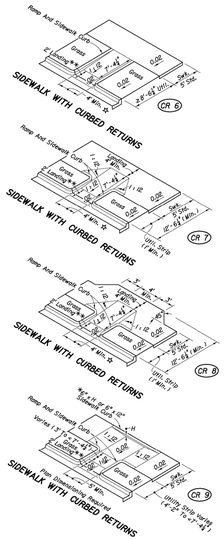

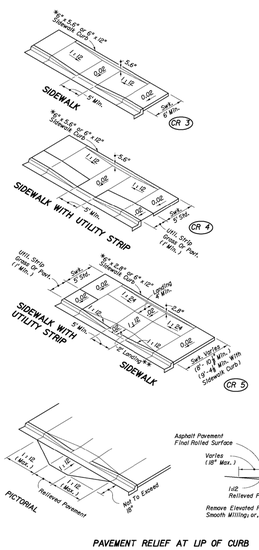

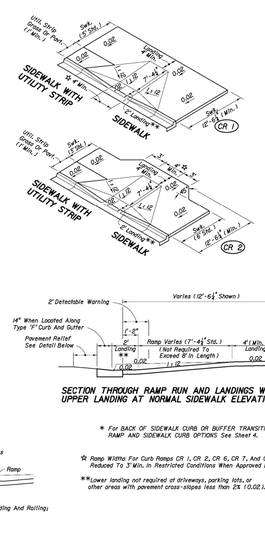

SECTION THROUGH RAMP RUN AND LANDINGS WITH UPPER LANDING AT NORMAL SIDEWALK ELEVATION

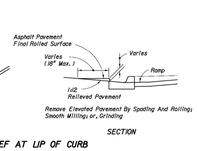

SECTION

Remove Elevated Pavement By Spalling And Rolling; Smooth Milling; or, Grinding

PAVEMENT RELIEF AT LIP OF CURB

* For BACK OF SIDEWALK CURB OR BUFFER TRANSITION And For RAMP AND SIDEWALK CURB OPTIONS See Sheet 4.

☆ Ramp Widths For Curb Ramps CR 1, CR 2, CR 6, CR 7, And CR 8 May Be Reduced To 3' Min. In Restricted Conditions When Approved By The Engineer.

**Lower landing not required at driveways, parking lots, or other areas with pavement cross-slopes less than 2% (0.02).

DIMENSIONAL FEATURES FOR PUBLIC SIDEWALK CURB RAMPS WHERE RAMP AND LANDING DEPTH ARE NOT RESTRICTED BY RIGHT OF WAY

2008 FDOT Design Standards	Last Revision	Sheet No.
PUBLIC SIDEWALK CURB RAMPS	07/01/07	2 of 6
	Index No.	304

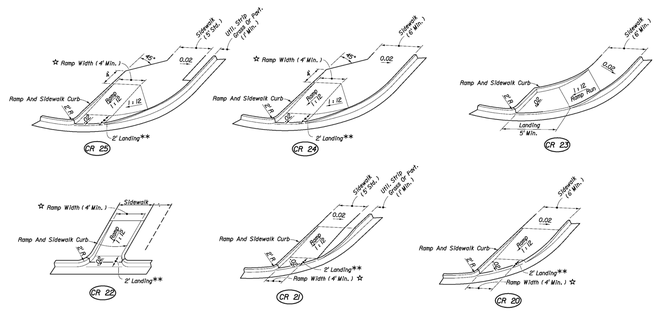

DIMENSIONAL FEATURES FOR PUBLIC SIDEWALK CURB RAMPS FOR LINEAR PEDESTRIAN TRAFFIC

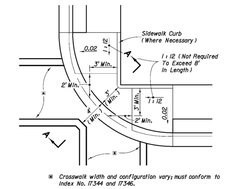

* Crosswalk width and configuration varys; must conform to Index No. 17344 and 17346.

PLAN

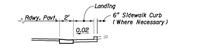

SECTION AA

CR 26

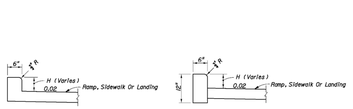

RAMP AND SIDEWALK CURB OPTIONS

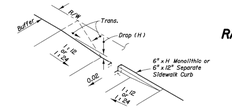

Construct Sidewalk Curb In Absence Of Adequate Buffer, Maintainable Surface Contour, Abutting Structure, Or When Called For In The Plans Or Standards

BACK OF SIDEWALK CURB OR BUFFER TRANSITION

DIMENSIONAL FEATURES FOR PUBLIC SIDEWALK COMBINED CORNER RAMPS UNDER CONDITIONS OF INFEASIBILITY

☆ Ramp Widths For Curb Ramps CR 20, CR 21, CR 22, CR 24, and CR 25 May Be Reduced To 3' Min. In Restricted Conditions When Approved By The Engineer.

**Lower landing not required at driveways, parking lots, or other areas with pavement cross-slopes less than 2% (0.02).

2008 FDOT Design Standards	Last Revision	Sheet No.
PUBLIC SIDEWALK CURB RAMPS	07/01/07	4 of 6
	Index No.	304

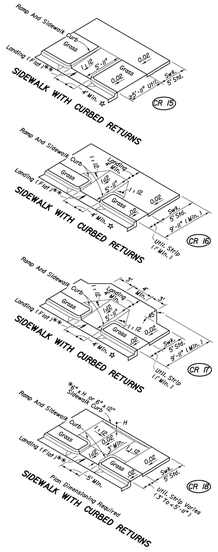

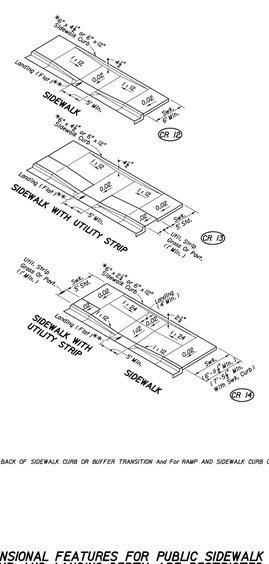

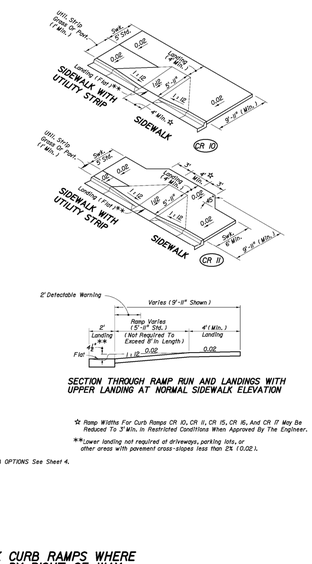

SECTION THROUGH RAMP RUN AND LANDINGS WITH UPPER LANDING AT NORMAL SIDEWALK ELEVATION

☆ Ramp Widths For Curb Ramps CR 10, CR 11, CR 15, CR 16, And CR 17 May Be Reduced To 3' Min. In Restricted Conditions When Approved By The Engineer.

**Lower landing not required at driveways, parking lots, or other areas with pavement cross-slopes less than 2% (0.02).

* For BACK OF SIDEWALK CURB OR BUFFER TRANSITION And For RAMP AND SIDEWALK CURB OPTIONS See Sheet 4.

DIMENSIONAL FEATURES FOR PUBLIC SIDEWALK CURB RAMPS WHERE RAMP AND LANDING DEPTH ARE RESTRICTED BY RIGHT OF WAY

2008 FDOT Design Standards	Last Revision	Sheet No.
PUBLIC SIDEWALK CURB RAMPS	07/01/07	3 of 6
	Index No.	304

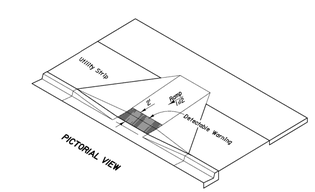

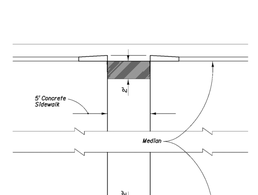

PLAN

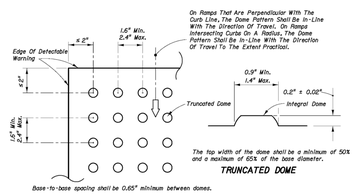

The top width of the dome shall be a minimum of 50% and a maximum of 65% of the base diameter.

TRUNCATED DOME

PLAN VIEW

All Sidewalk Curb Ramps Shall Have Detectable Warning Surfaces That Extend The Full Width Of The Ramp And In The Direction Of Travel 24 Inches (600 mm) From The Back Of Curb.

CURB RAMP DETECTABLE WARNING DETAIL

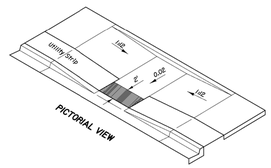

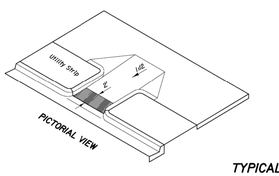

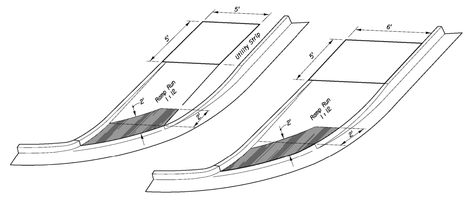

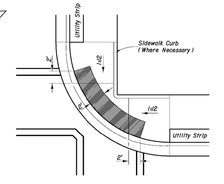

TYPICAL PLACEMENT OF DETECTABLE WARNING ON CURB RAMPS

2008 FDOT Design Standards	Last Revision	Sheet No.
PUBLIC SIDEWALK CURB RAMPS	07/01/07	6 of 6
	Index No.	304

REVISIONS					
DATE	BY	DESCRIPTION	DATE	BY	DESCRIPTION

Kimley»Horn
BRIAN A. GOOD, P.E.
P.E. LICENSE NUMBER 56939
445 24TH STREET, SUITE 200
VERO BEACH, FL 32960
(772) 794-4100
CERTIFICATE OF AUTHORIZATION: 00000696

CITY OF FORT PIERCE/
FORT PIERCE REDEVELOPMENT AGENCY

NORTH 17TH STREET IMPROVEMENTS
ORANGE AVENUE TO AVENUE D

MISCELLANEOUS DETAILS

SHEET NO. 14

mike.forman 10/19/2016 8:44:09 AM K:\VRB_Roadway\47922003\cadd\Phase I\rdwy\SPDTR002.dgn

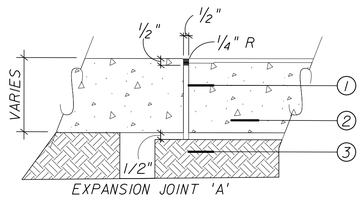

EXPANSION JOINT 'A'

MATERIAL NOTES:

1. 1/2" PREFORMED EXPANSION JOINT FILLER (NEOPRENE OR BITUMINOUS CORK/FIBERBOARD).
2. CONCRETE SLAB - DEPTH VARIES, 3000 PSI (TYP). W/ FIBER MESH
3. COMPACTED SUBGRADE TO 95% OF AASHTO T-99 DENSITY.

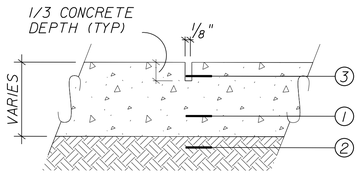

WEAKENED PLANE JOINT 'C'
(CONTROL JOINT)

TYPICAL JOINTS
N.T.S.

MATERIAL NOTES:

1. CONCRETE SLAB - DEPTH VARIES, 3000 PSI (TYP). W/ FIBER MESH
2. COMPACTED SUBGRADE TO 95% OF AASHTO T-99 DENSITY.
3. 1/8" SAWCUT CONTROL JOINT.

NOTES:

A. ON ALL CURB RETURNS A 1/2" EXPANSION JOINT SHALL BE CONSTRUCTED BETWEEN THE BACK OF CURB AND THE SIDEWALK FOR THE ENTIRE LENGTH OF THE RETURN.

B. 1/2" EXPANSION JOINT EVERY 40'-50' O.C., OR AT COLD JOINTS. (LOCATE 1/2" EXPANSION JOINTS TO BLEND WITH SCORING PATTERN)

C. LOCATION OF SAWCUT JOINTS AND EXPANSION JOINTS SHALL BE INSTALLED ACCORDING TO THESE PLANS AND INDEX 310.

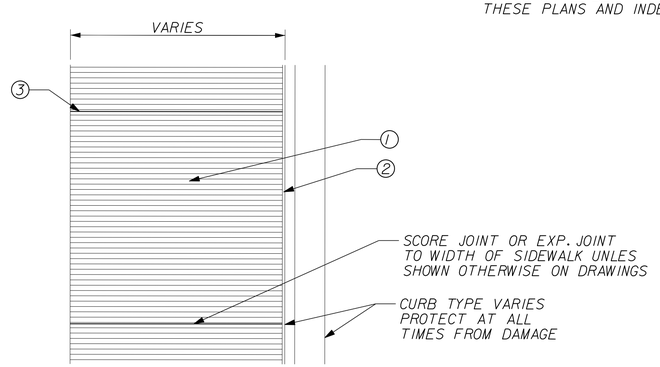

MATERIAL NOTES:

1. 4" THICK CONCRETE SIDEWALK, 3000 PSI MIN. W/ FIBER MESH, MEDIUM BROOM FINISH CENTER FIELD PERPENDICULAR TO DIRECTION OF TRAVEL
2. EXPANSION JOINT "TYPE A" (SEE DETAIL)
3. SAWCUT CONTROL JOINT "TYPE C" OR EXPANSION JOINT "TYPE A" EVERY 40'-50' O.C. (SEE DETAIL)

BROOM FINISH CONCRETE PAVING
N.T.S.

NOTES:

1. THIS DETAIL IS FOR SURFACE TREATMENT ONLY. REFER TO ROADWAY DRAWINGS FOR SPECIFICATIONS OF MATERIALS, ETC.
2. COST OF SIDEWALK FINISH SHALL BE INCLUDED IN UNIT PRICE OF CONCRETE SIDEWALK.

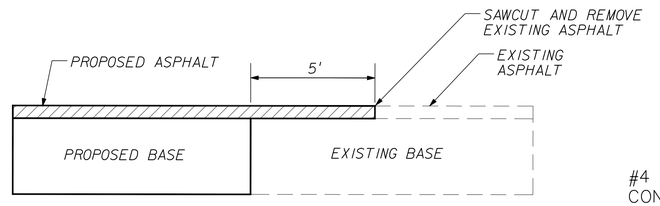

BUTT JOINT DETAIL
N.T.S.

NOTE:

COST OF CONSTRUCTING JOINT SHALL BE INCLUDED IN UNIT PRICE OF ASPHALTIC CONCRETE.

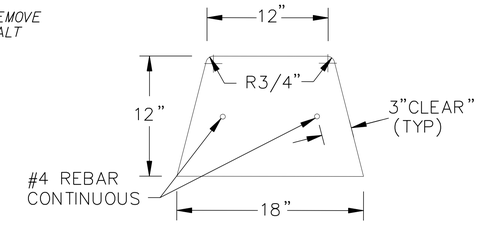

TYPE 'HEADER' CURB
N.T.S.

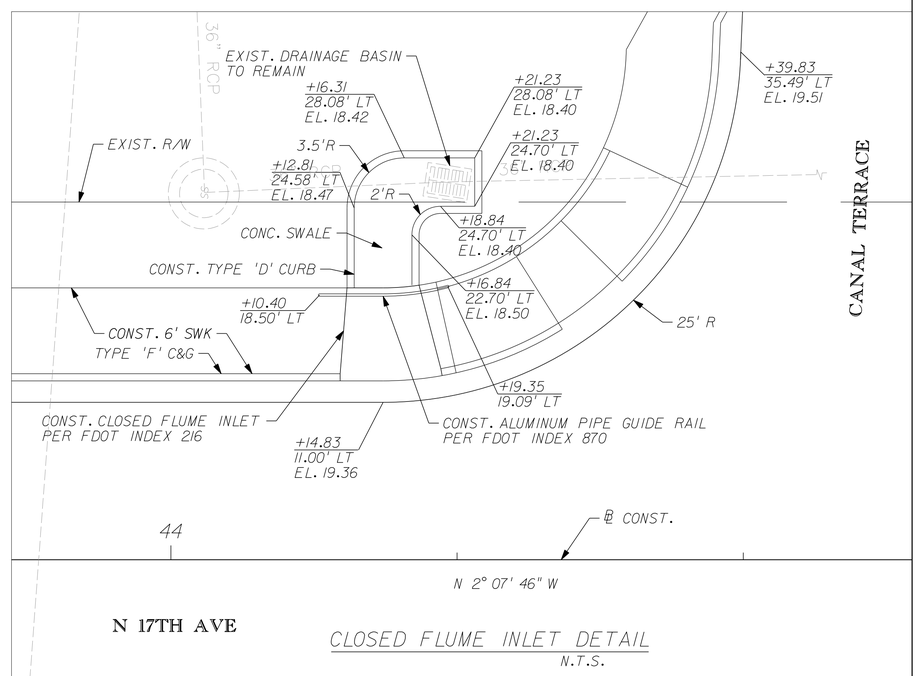

CLOSED FLUME INLET DETAIL
N.T.S.

REVISIONS					
DATE	BY	DESCRIPTION	DATE	BY	DESCRIPTION

Kimley»Horn
BRIAN A. GOOD, P.E.
P.E. LICENSE NUMBER 56939
445 24TH STREET, SUITE 200
VERO BEACH, FL 32960
(772) 794-4100
CERTIFICATE OF AUTHORIZATION: 00000696

CITY OF FORT PIERCE/
FORT PIERCE REDEVELOPMENT AGENCY

NORTH 17TH STREET IMPROVEMENTS
ORANGE AVENUE TO AVENUE D

MISCELLANEOUS DETAILS

SHEET NO. 15

mike.forman 10/19/2016 8:44:54 AM K:\VRB_Roadway\47922003\cadd\Phase 1\rdwy\SPDTRD03.dgn

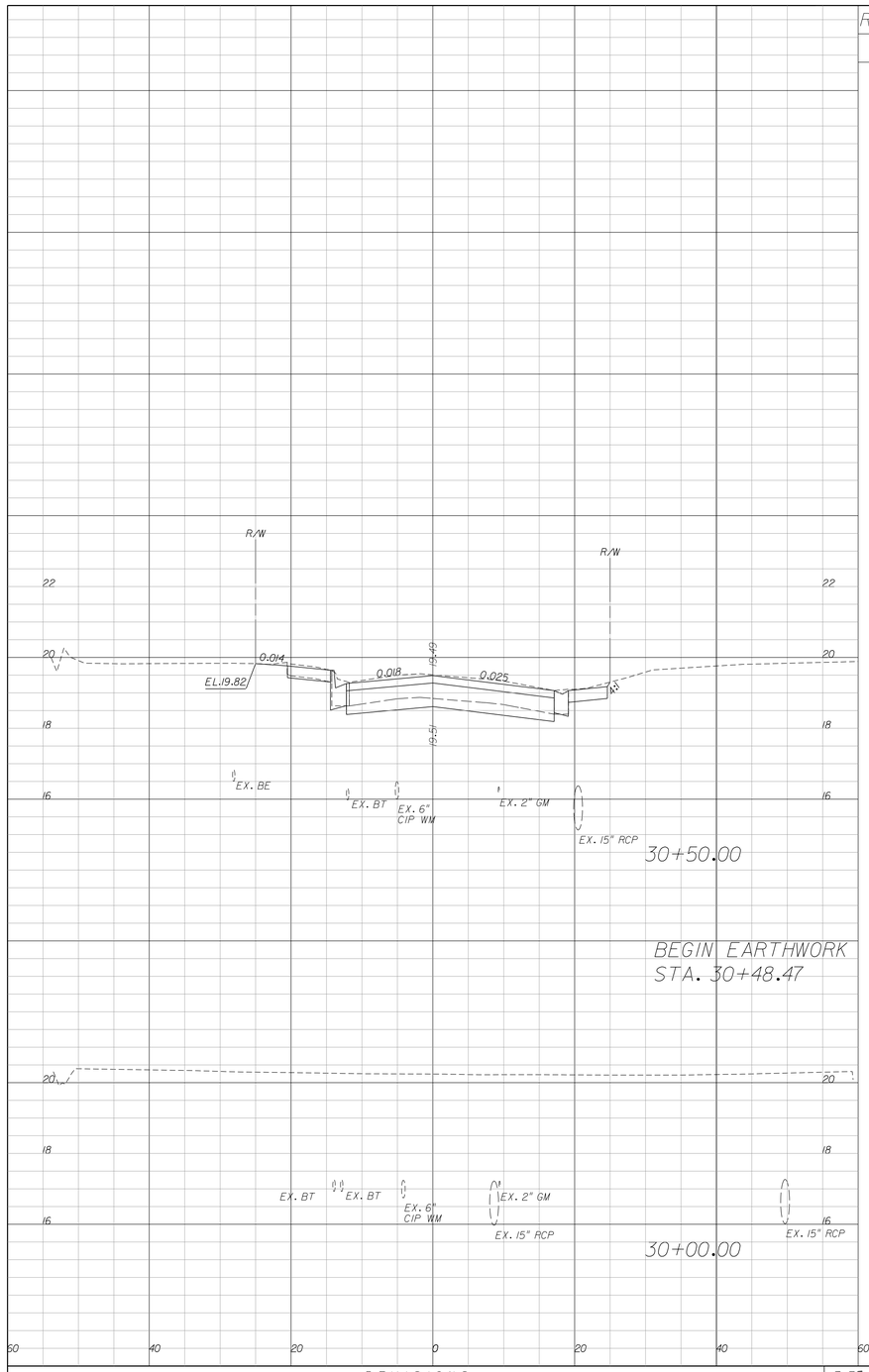

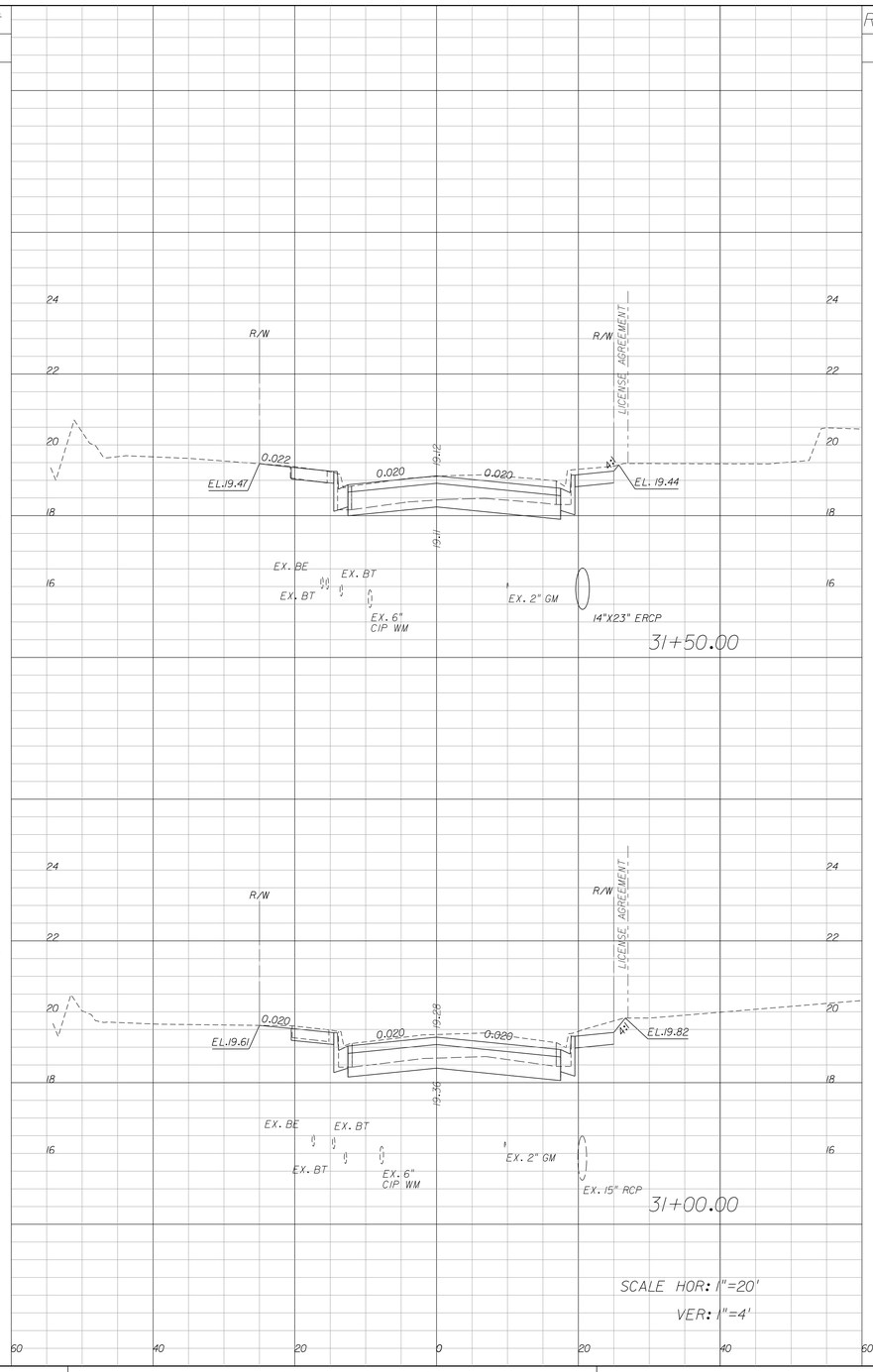

Regular Exc.		Embankment	
A	V	A	V
35.3	2.0	0.0	0.0
35.3	0.0	0.0	0.0
37.1	71.8	0.0	0.0
40.5	70.2	0.0	0.0

REVISIONS

DATE	BY	DESCRIPTION	DATE	BY	DESCRIPTION

Kimley»Horn
BRIAN A. GOOD, P.E.
P.E. LICENSE NUMBER 56939
601 21ST STREET, SUITE 300
VERO BEACH, FL 32960
(772) 562-7981
CERTIFICATE OF AUTHORIZATION: 00000696

CITY OF FORT PIERCE/
FORT PIERCE REDEVELOPMENT AGENCY

NORTH 17TH STREET IMPROVEMENTS
ORANGE AVENUE TO AVENUE D

CROSS SECTIONS

SHEET NO.
17

mike.forman 10/19/2016 8:45:08 AM K:\VRB_Roadway\47922003\cadd\Phase 1\rdwy\rdxsrd01.dgn

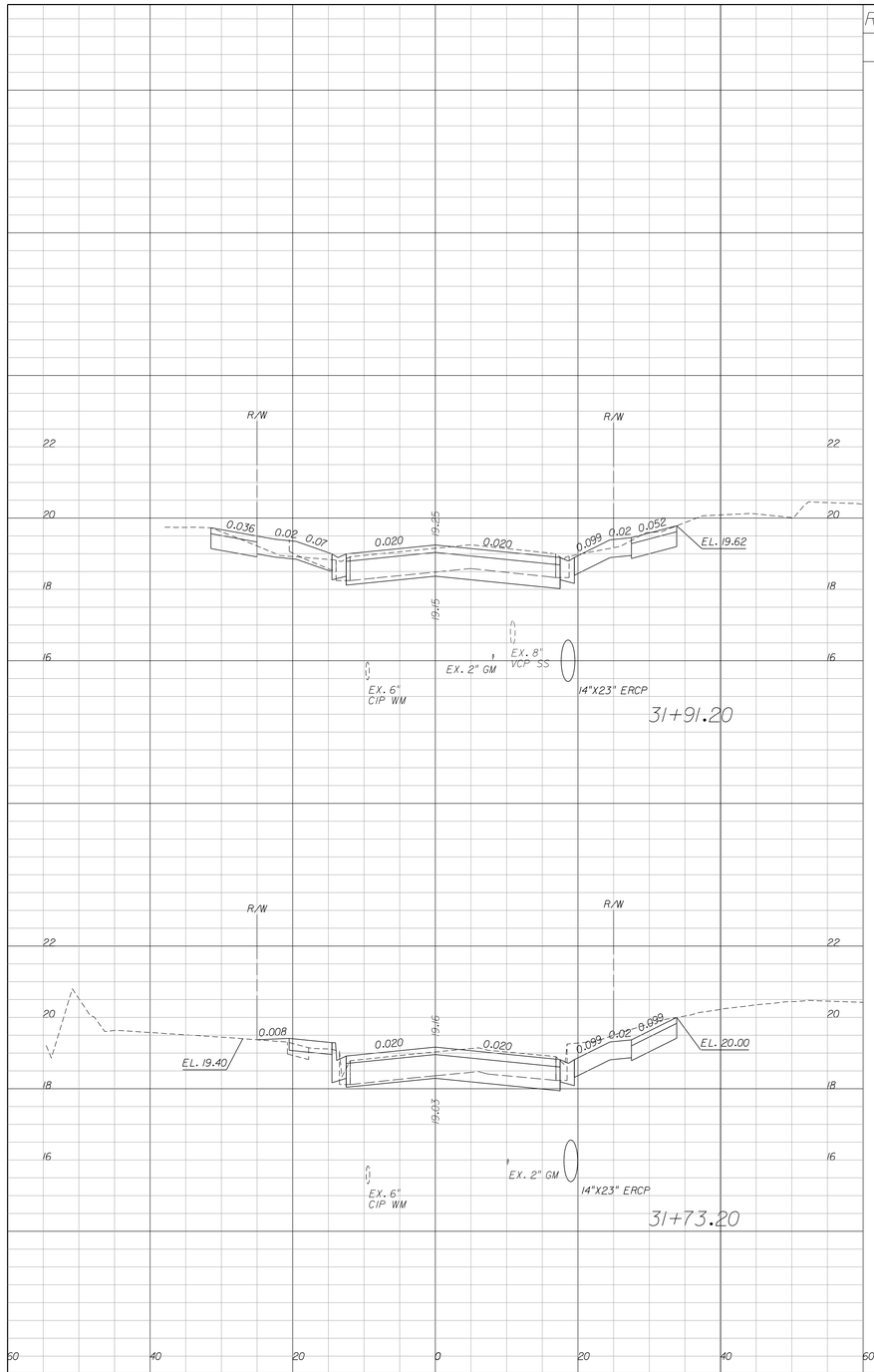

Regular Exc.		Embankment	
A	V	A	V
39.8	26.5	0.0	0.1
39.9	33.1	0.2	0.1

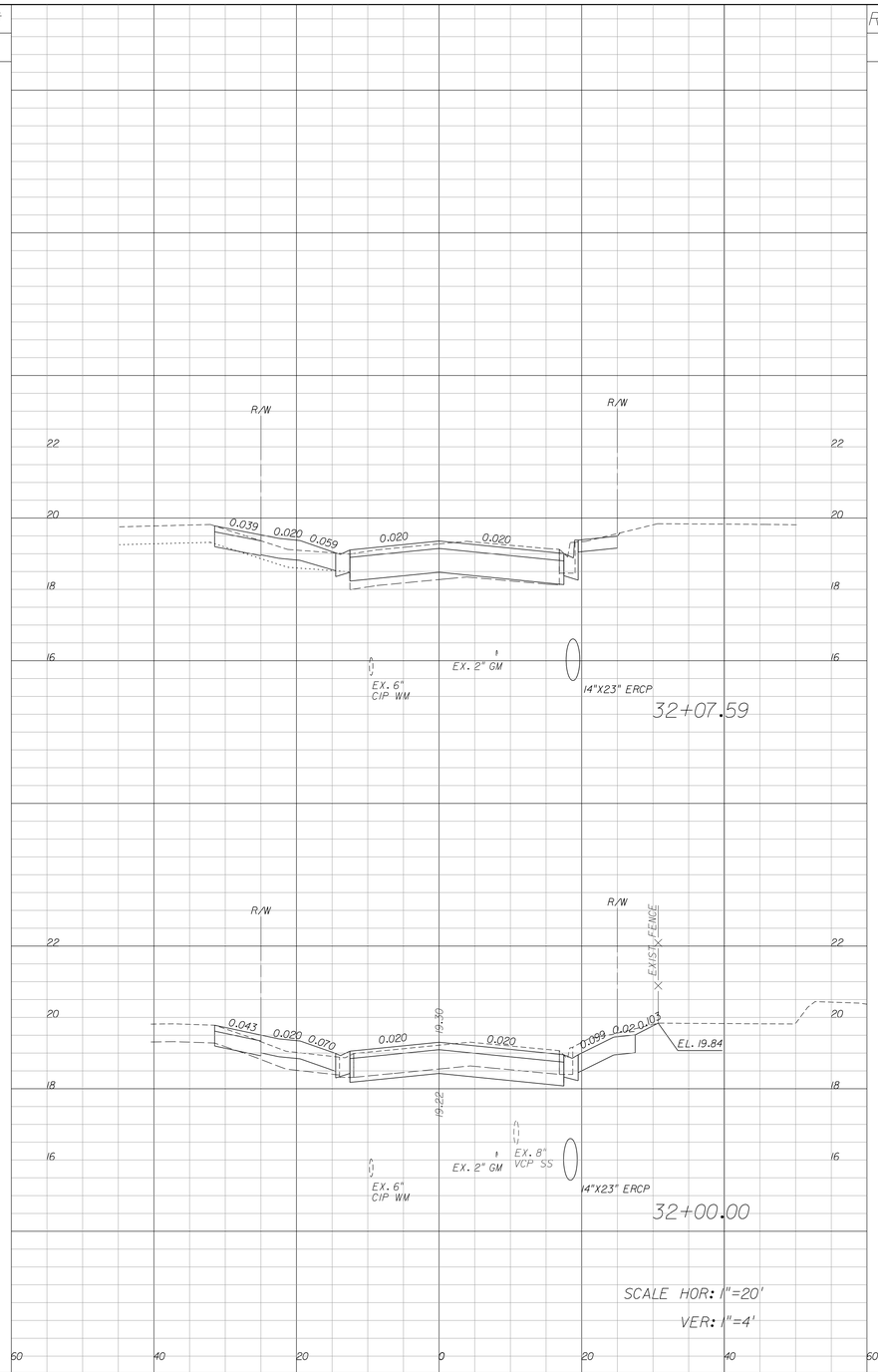

Regular Exc.		Embankment	
A	V	A	V
38.0	11.1	0.0	0.0
40.8	13.1	0.0	0.0

REVISIONS					
DATE	BY	DESCRIPTION	DATE	BY	DESCRIPTION

Kimley»Horn
BRIAN A. GOOD, P.E.
P.E. LICENSE NUMBER 56939
601 21ST STREET, SUITE 300
VERO BEACH, FL 32960
(772) 562-7981
CERTIFICATE OF AUTHORIZATION: 00000696

CITY OF FORT PIERCE/
FORT PIERCE REDEVELOPMENT AGENCY

NORTH 17TH STREET IMPROVEMENTS
ORANGE AVENUE TO AVENUE D

CROSS SECTIONS

SHEET NO. 18

mike.forman 10/19/2016 8:45:19 AM K:\VRB_Roadway\47922003\cadd\Phase 1\rdwy\rdxsrd01.dgn

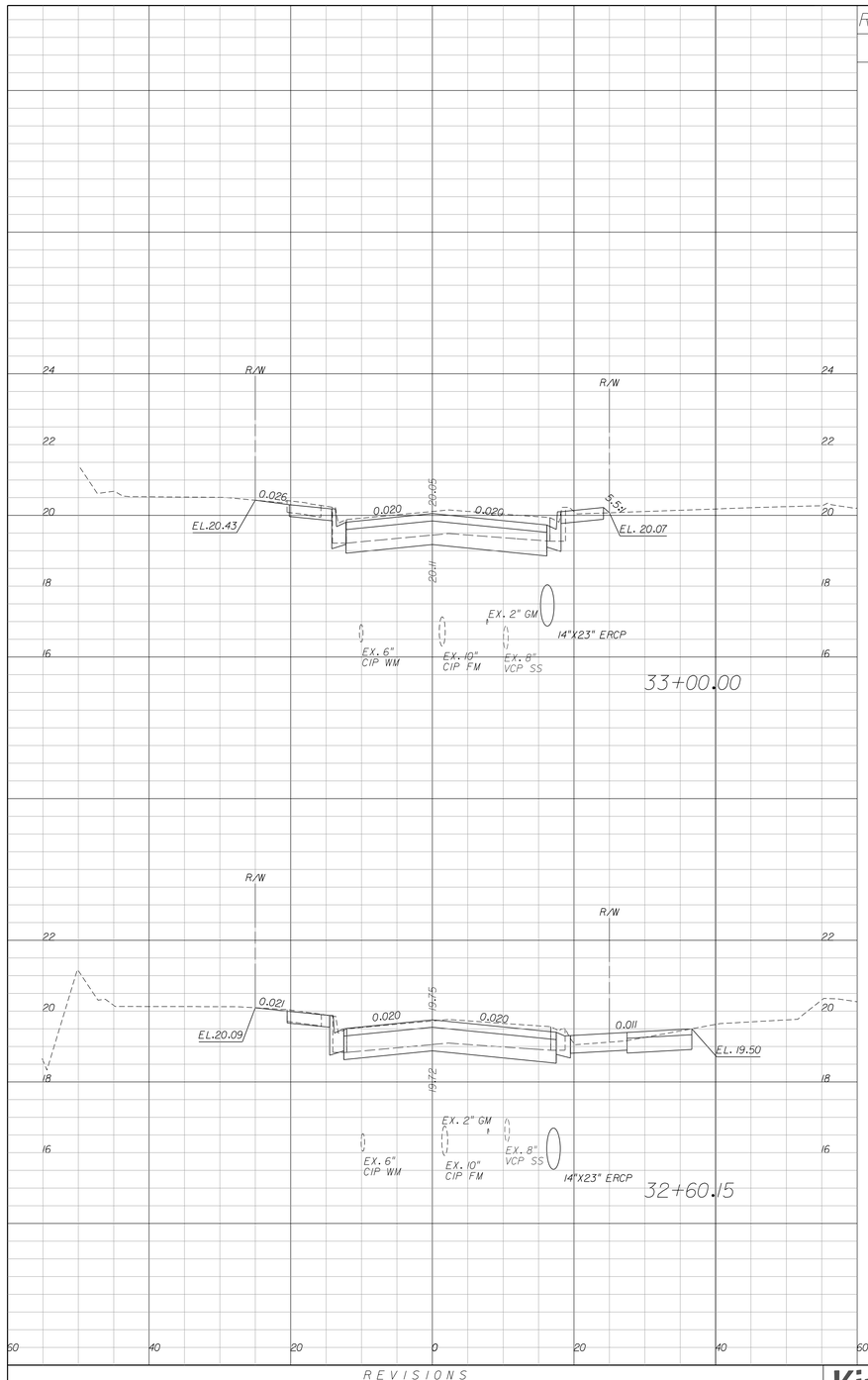

Regular Exc.		Embankment	
A	V	A	V
36.0	55.5	0.1	0.0

Regular Exc.		Embankment	
A	V	A	V
39.1	75.0	0.0	0.0

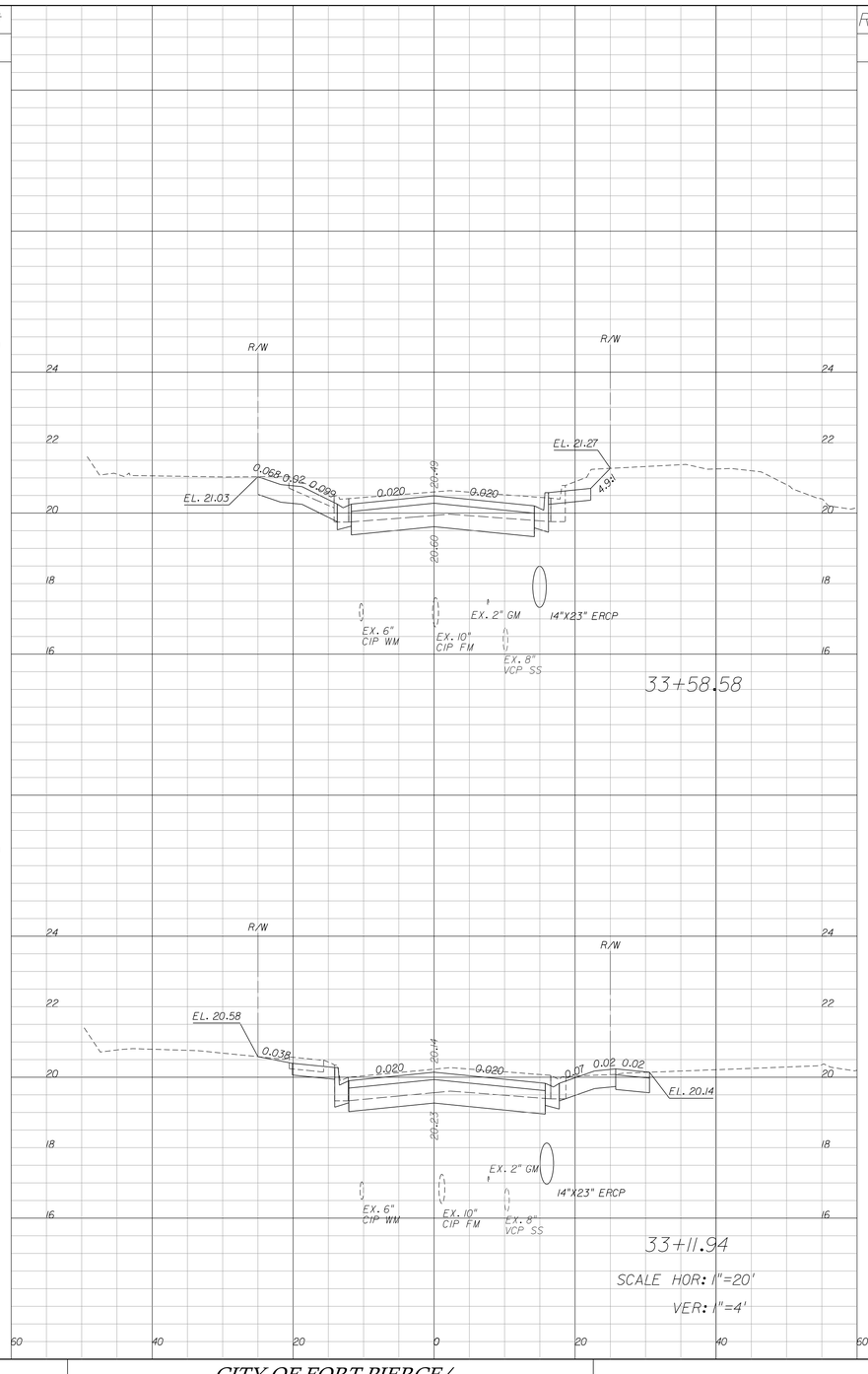

Regular Exc.		Embankment	
A	V	A	V
41.8	71.9	0.0	0.0

Regular Exc.		Embankment	
A	V	A	V
41.5	17.1	0.0	0.0

50 40 20 0 20 40 60

REVISIONS					
DATE	BY	DESCRIPTION	DATE	BY	DESCRIPTION

Kimley»Horn
BRIAN A. GOOD, P.E.
P.E. LICENSE NUMBER 56939
6012IST STREET, SUITE 300
VERO BEACH, FL 32960
(772) 562-7981
CERTIFICATE OF AUTHORIZATION: 00000696

CITY OF FORT PIERCE/
FORT PIERCE REDEVELOPMENT AGENCY

NORTH 17TH STREET IMPROVEMENTS
ORANGE AVENUE TO AVENUE D

CROSS SECTIONS

SHEET NO. 19

mike.forman 10/19/2016 8:45:29 AM K:\VRB_Roadway\47922003\cadd\Phase 1\rdwy\rdxsrd01.dgn

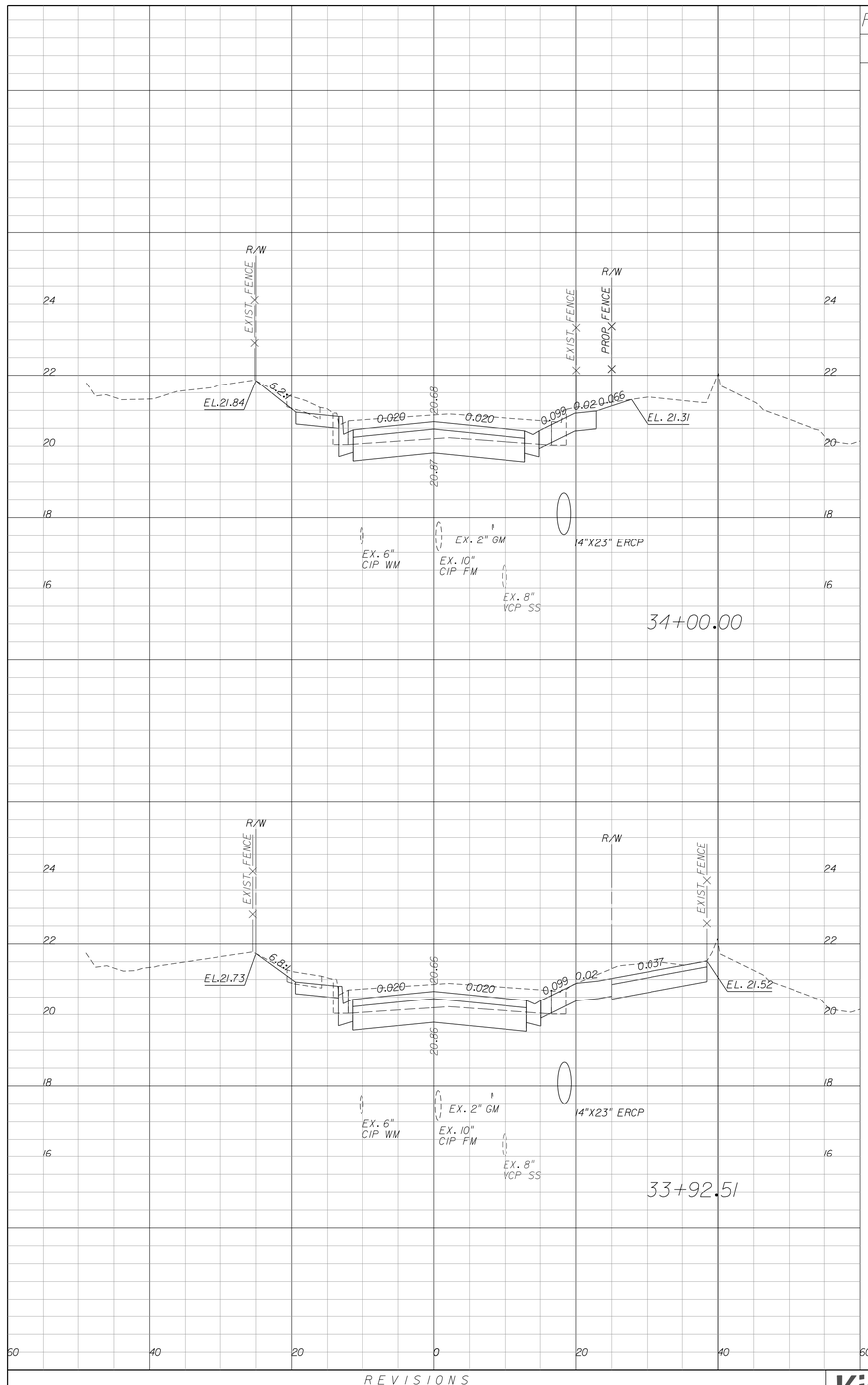

Regular Exc.		Embankment	
A	V	A	V
41.2	12.9	0.0	0.0

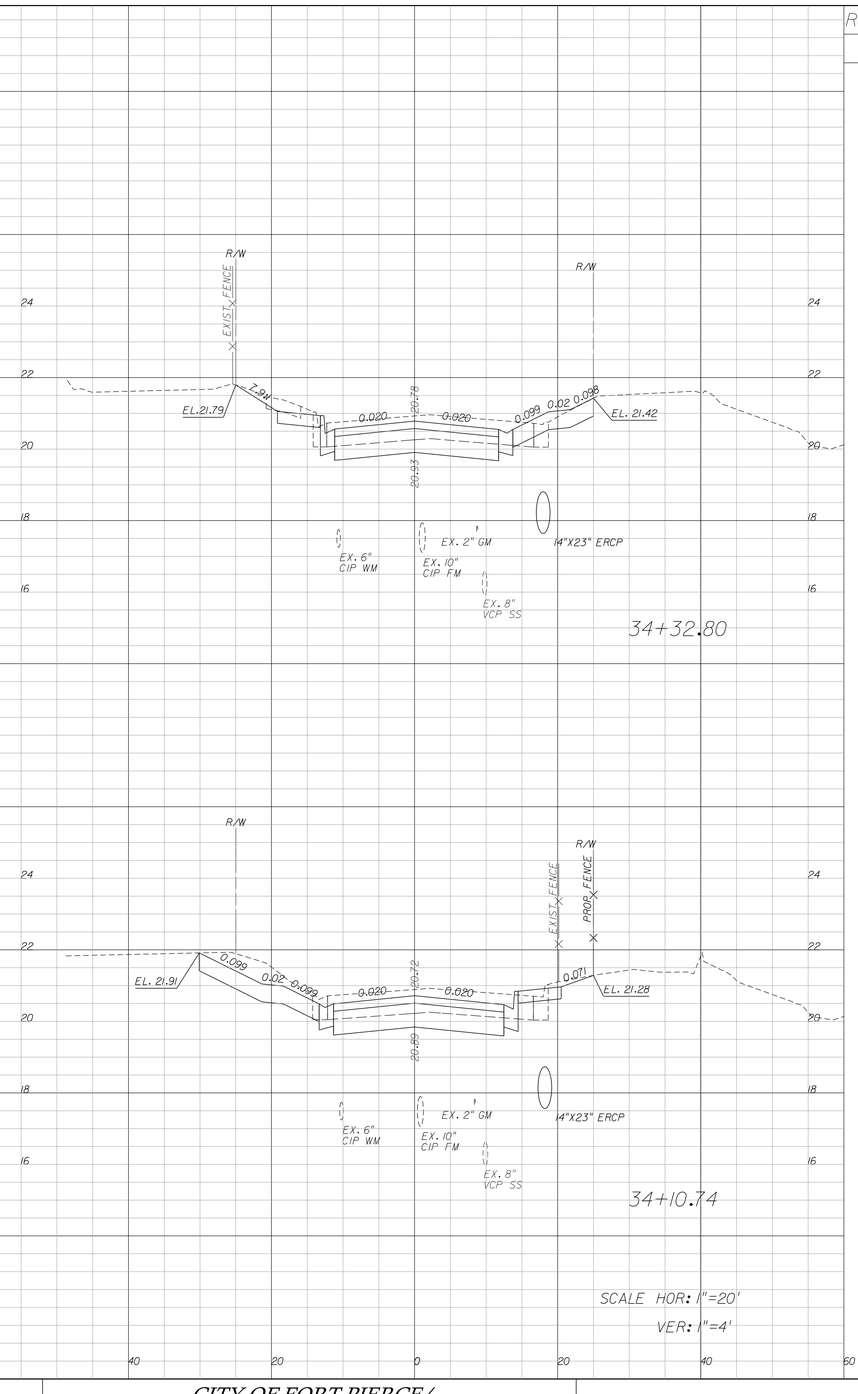

Regular Exc.		Embankment	
A	V	A	V
37.0	34.0	0.0	0.0

Regular Exc.		Embankment	
A	V	A	V
52.0	58.9	0.0	0.0

Regular Exc.		Embankment	
A	V	A	V
46.3	17.4	0.0	0.0

SCALE HOR: 1"=20'
VER: 1"=4'

REVISIONS					
DATE	BY	DESCRIPTION	DATE	BY	DESCRIPTION

Kimley»Horn
BRIAN A. GOOD, P.E.
P.E. LICENSE NUMBER 56939
601 21ST STREET, SUITE 300
VERO BEACH, FL 32960
(772) 562-7981
CERTIFICATE OF AUTHORIZATION: 00000696

CITY OF FORT PIERCE/
FORT PIERCE REDEVELOPMENT AGENCY

NORTH 17TH STREET IMPROVEMENTS
ORANGE AVENUE TO AVENUE D

CROSS SECTIONS

SHEET NO. 20

mike.forman 10/19/2016 8:45:40 AM K:\VRB_Roadway\47922003\cadd\Phase 1\rdwy\rdxsrd01.dgn

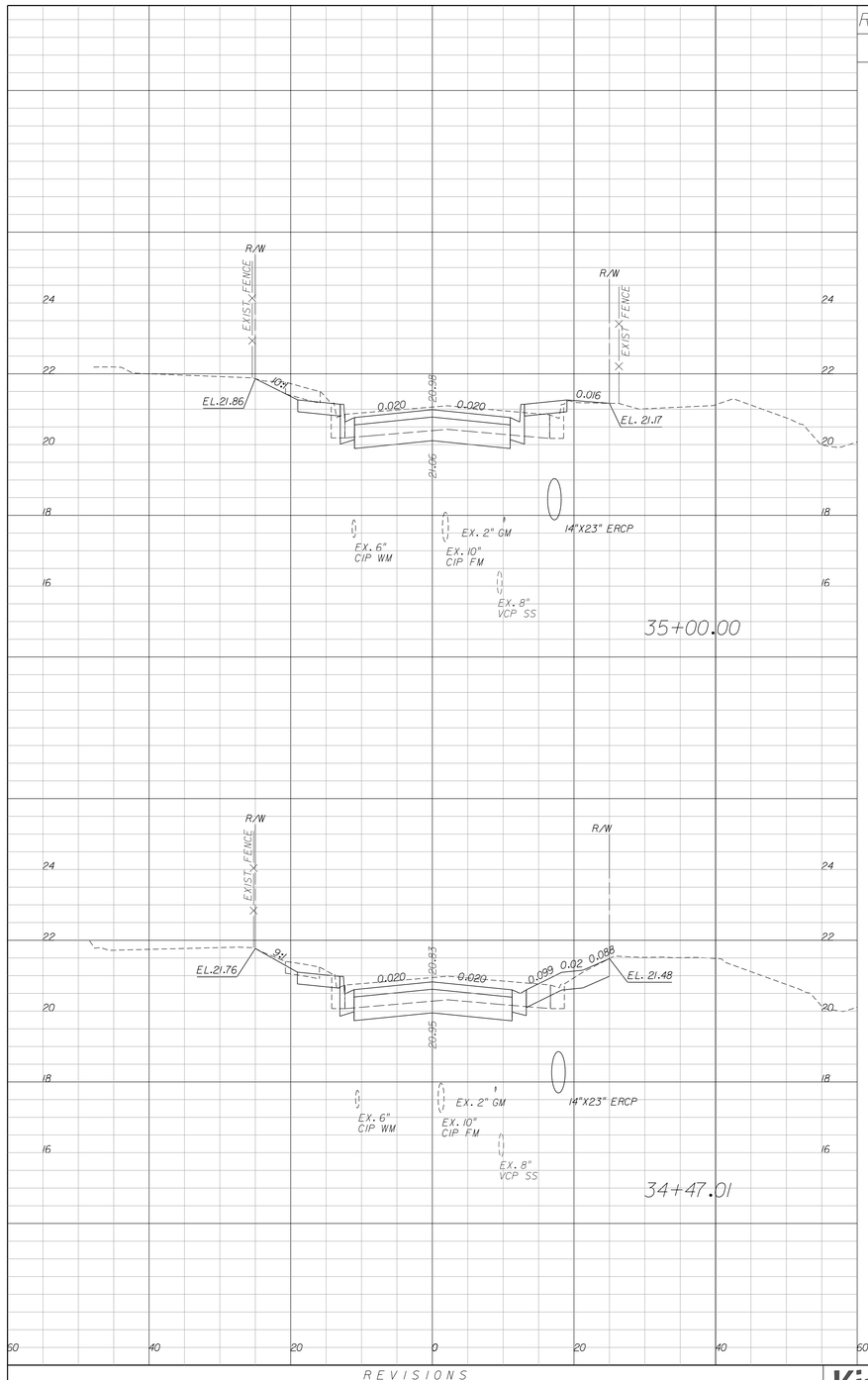

Regular Exc.		Embankment	
A	V	A	V
30.0	63.4	0.3	0.3

Regular Exc.		Embankment	
A	V	A	V
34.7	18.9	0.0	0.0

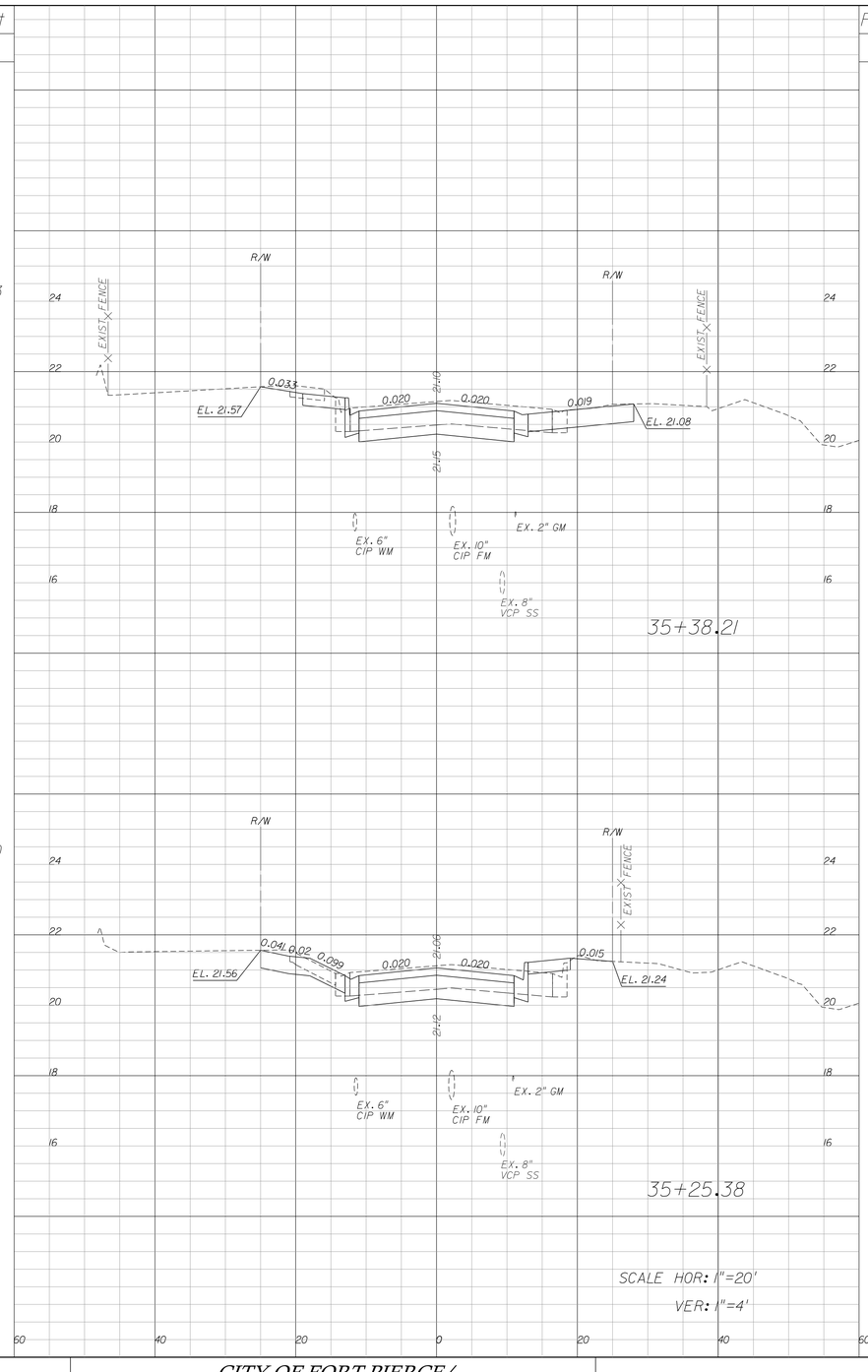

Regular Exc.		Embankment	
A	V	A	V
35.9	16.0	0.0	0.1

Regular Exc.		Embankment	
A	V	A	V
31.6	28.9	0.2	0.3

REVISIONS					
DATE	BY	DESCRIPTION	DATE	BY	DESCRIPTION

Kimley»Horn
BRIAN A. GOOD, P.E.
P.E. LICENSE NUMBER 56939
601 21ST STREET, SUITE 300
VERO BEACH, FL 32960
(772) 562-7981
CERTIFICATE OF AUTHORIZATION: 00000696

CITY OF FORT PIERCE/
FORT PIERCE REDEVELOPMENT AGENCY

NORTH 17TH STREET IMPROVEMENTS
ORANGE AVENUE TO AVENUE D

CROSS SECTIONS

SHEET NO.
21

mike.forman 10/19/2016 8:45:51 AM K:\VRB_Roadway\47922003\cadd\Phase 1\rdwy\rdxsrd01.dgn

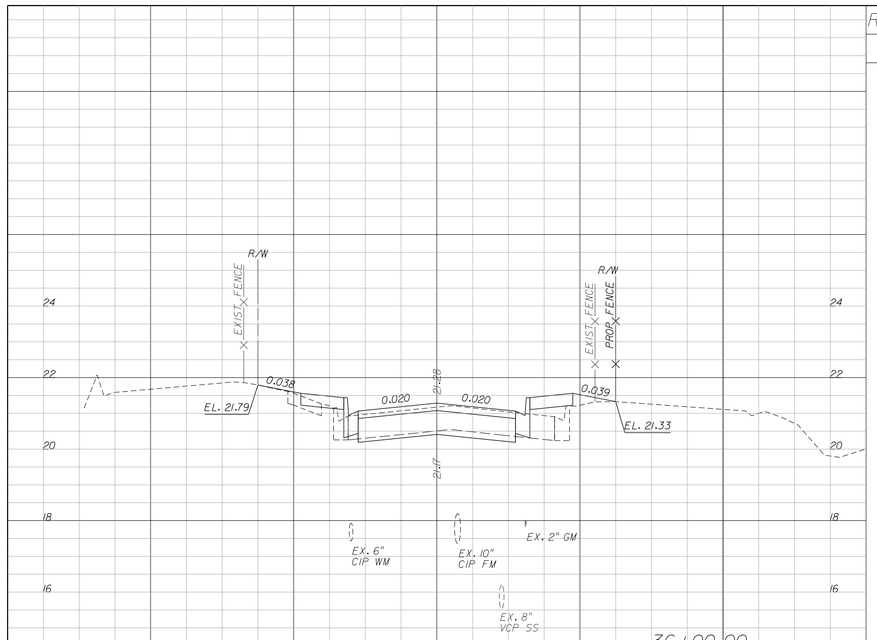

36+00.00

Regular Exc.		Embankment	
A	V	A	V
20.5	37.4	2.5	2.9

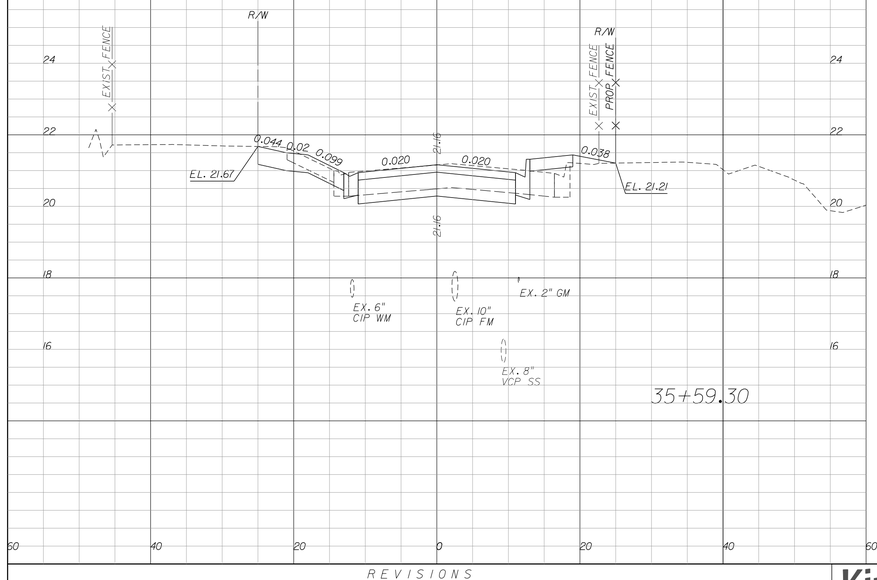

35+59.30

Regular Exc.		Embankment	
A	V	A	V
29.2	25.4	1.3	0.5

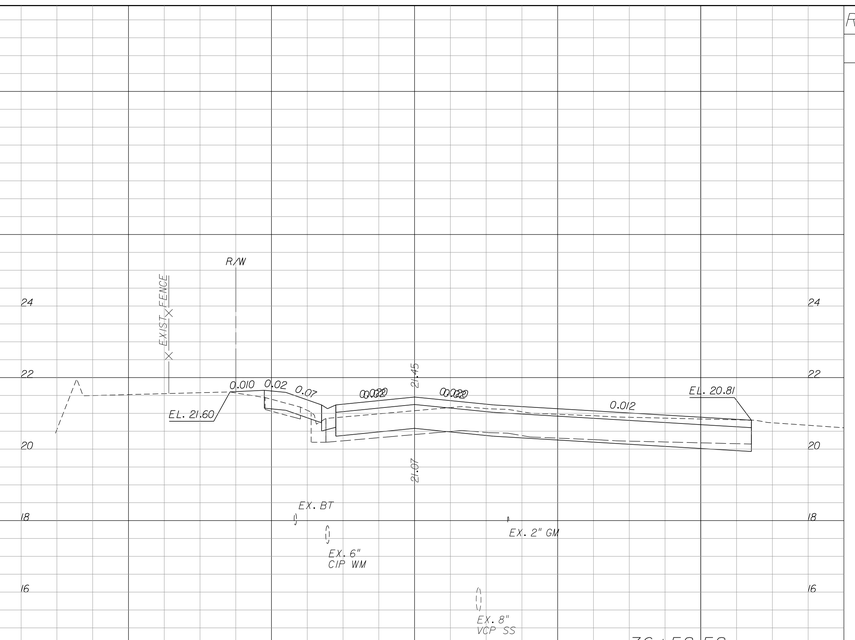

36+58.58

Regular Exc.		Embankment	
A	V	A	V
43.0	57.7	0.5	2.4

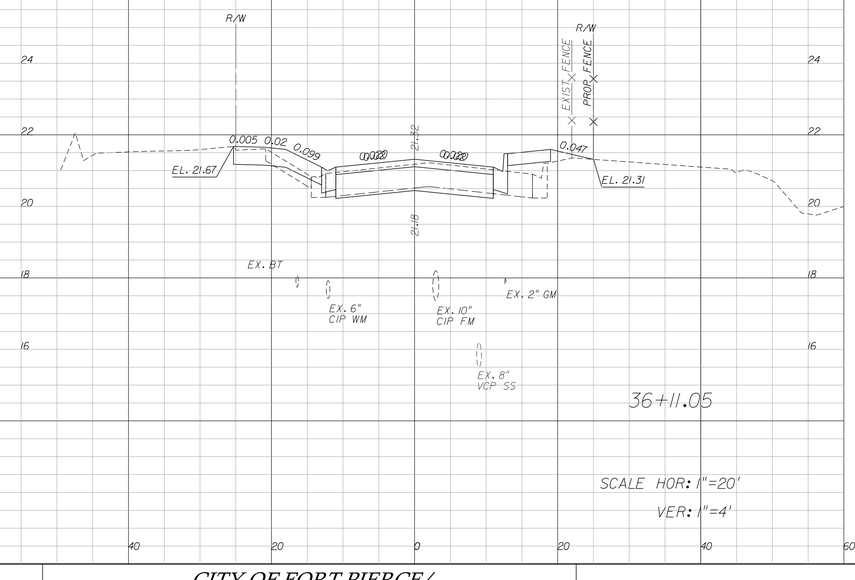

36+11.05

Regular Exc.		Embankment	
A	V	A	V
22.5	8.8	2.3	1.0

50 40 20 0 20 40 60

SCALE HOR: 1"=20'
VER: 1"=4'

REVISIONS					
DATE	BY	DESCRIPTION	DATE	BY	DESCRIPTION

Kimley»Horn
BRIAN A. GOOD, P.E.
P.E. LICENSE NUMBER 56939
6012IST STREET, SUITE 300
VERO BEACH, FL 32960
(772) 562-7981
CERTIFICATE OF AUTHORIZATION: 00000696

CITY OF FORT PIERCE/
FORT PIERCE REDEVELOPMENT AGENCY

NORTH 17TH STREET IMPROVEMENTS
ORANGE AVENUE TO AVENUE D

CROSS SECTIONS

SHEET NO. 22

mike.forman 10/19/2016 8:46:01 AM K:\VRB_Roadway\47922003\cadd\Phase 1\rdwy\rdxsrd01.dgn

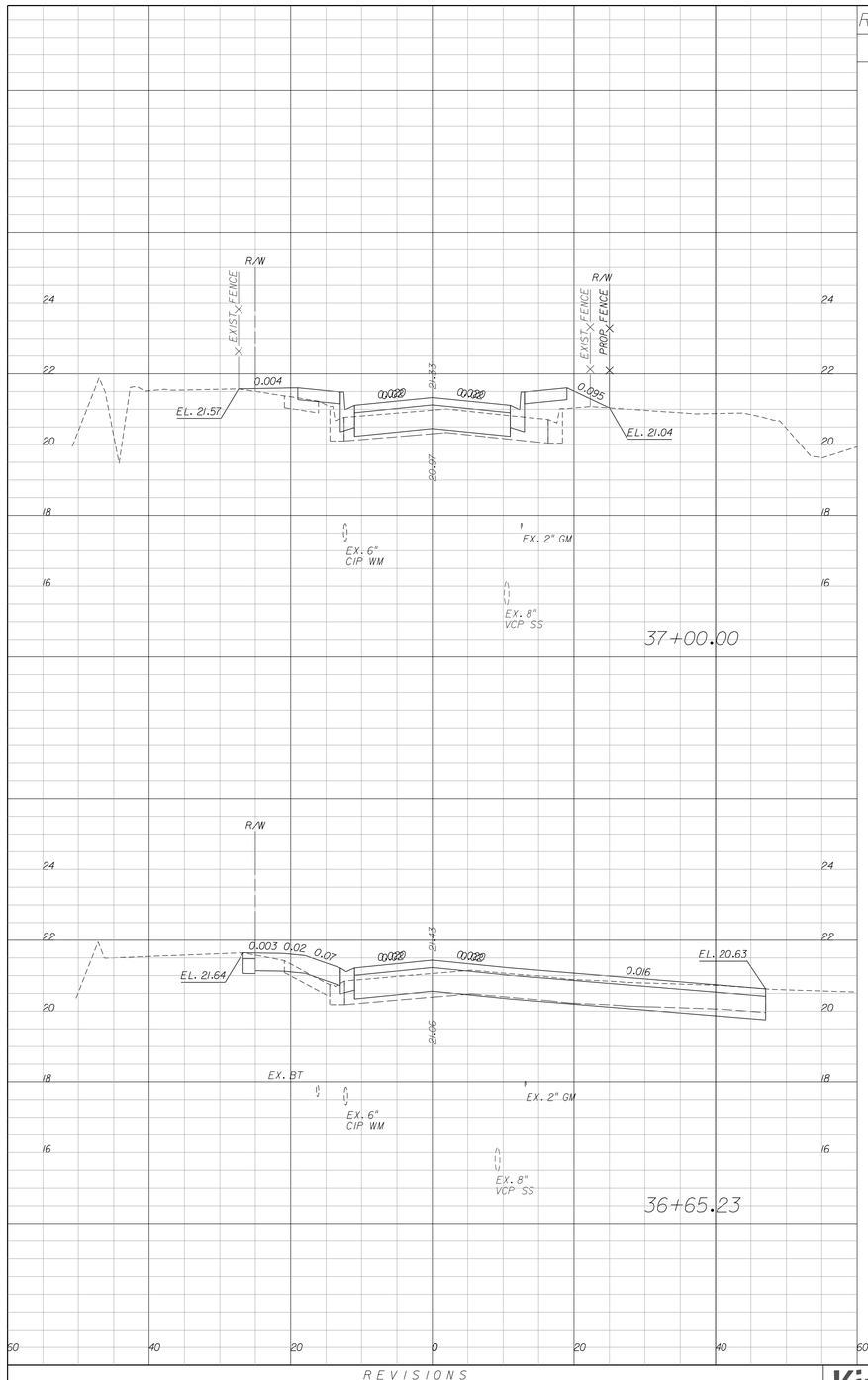

Regular Exc.		Embankment	
A	V	A	V
13.8	37.5	6.0	3.9

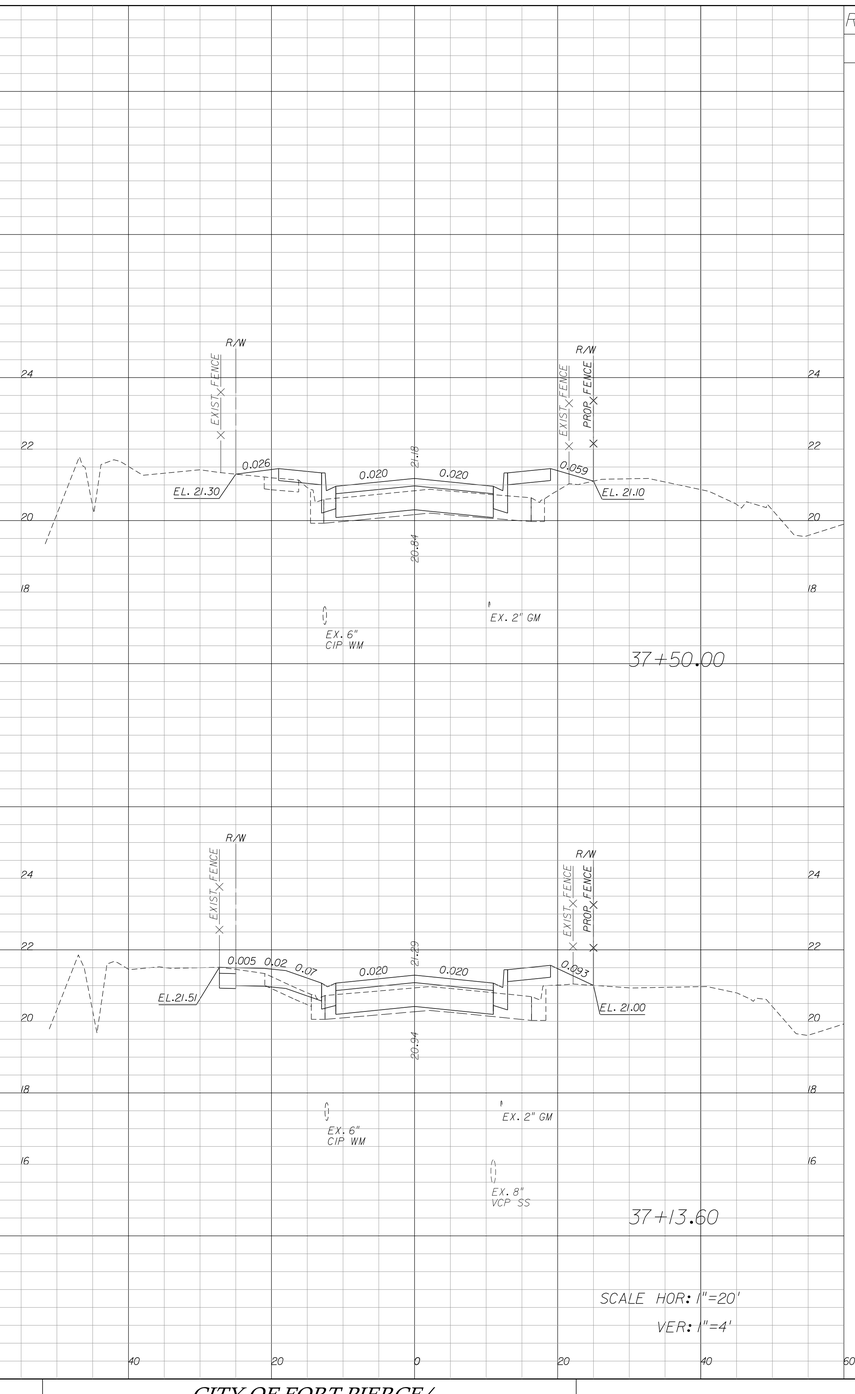

Regular Exc.		Embankment	
A	V	A	V
14.3	21.8	5.9	6.7

Regular Exc.		Embankment	
A	V	A	V
44.4	10.8	0.1	0.1

Regular Exc.		Embankment	
A	V	A	V
18.1	8.0	4.0	2.5

SCALE HOR: 1"=20'
VER: 1"=4'

REVISIONS					
DATE	BY	DESCRIPTION	DATE	BY	DESCRIPTION

Kimley»Horn
BRIAN A. GOOD, P.E.
P.E. LICENSE NUMBER 56939
601 21ST STREET, SUITE 300
VERO BEACH, FL 32960
(772) 562-7981
CERTIFICATE OF AUTHORIZATION: 00000696

CITY OF FORT PIERCE/
FORT PIERCE REDEVELOPMENT AGENCY

NORTH 17TH STREET IMPROVEMENTS
ORANGE AVENUE TO AVENUE D

CROSS SECTIONS

SHEET NO. 23

mike.forman 10/19/2016 8:46:12 AM K:\VRB_Roadway\47922003\cadd\Phase 1\rdwy\rdxsrd01.dgn

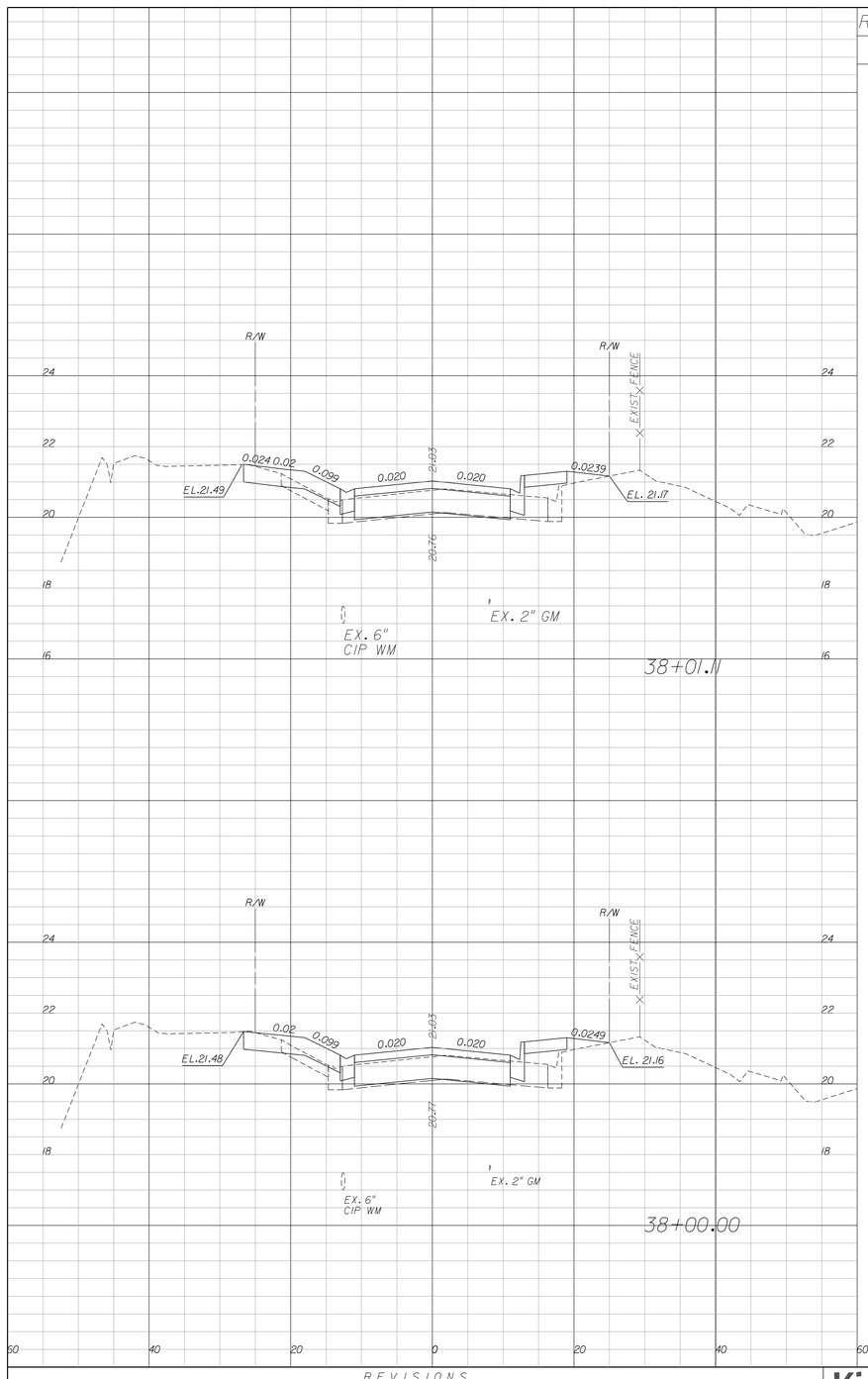

Regular Exc.		Embankment	
A	V	A	V
19.5	0.8	2.8	0.1
19.5	31.3	2.8	8.1

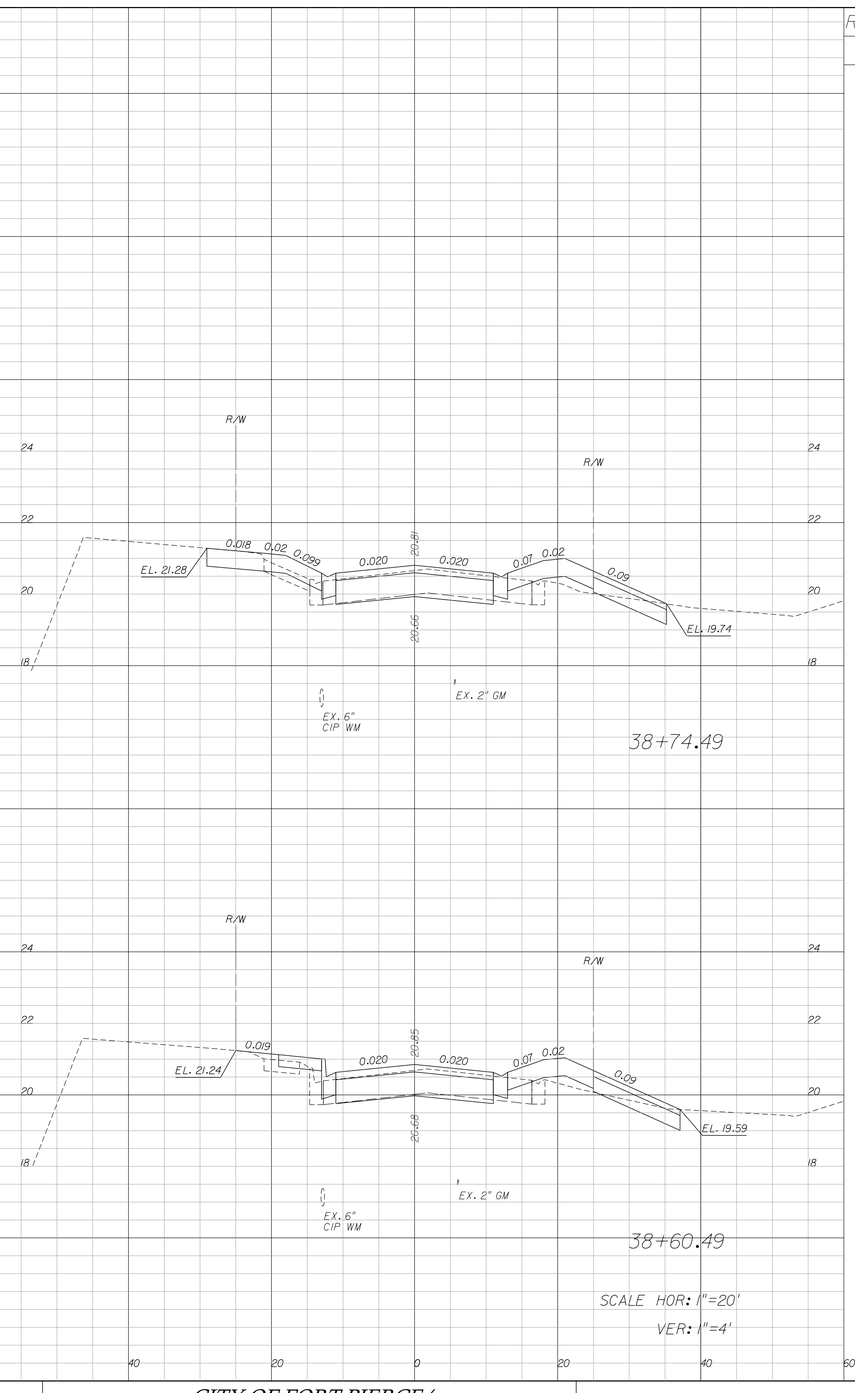

Regular Exc.		Embankment	
A	V	A	V
27.4	13.0	1.4	0.9
22.6	46.3	2.2	5.5

REVISIONS					
DATE	BY	DESCRIPTION	DATE	BY	DESCRIPTION

Kimley»Horn
BRIAN A. GOOD, P.E.
P.E. LICENSE NUMBER 56939
601 21ST STREET, SUITE 300
VERO BEACH, FL 32960
(772) 562-7981
CERTIFICATE OF AUTHORIZATION: 00000696

CITY OF FORT PIERCE/
FORT PIERCE REDEVELOPMENT AGENCY

NORTH 17TH STREET IMPROVEMENTS
ORANGE AVENUE TO AVENUE D

CROSS SECTIONS

SHEET NO.
24

mike.forman 10/19/2016 8:46:23 AM K:\VRB_Roadway\47922003\cadd\Phase 1\rdwy\rdxsrd01.dgn

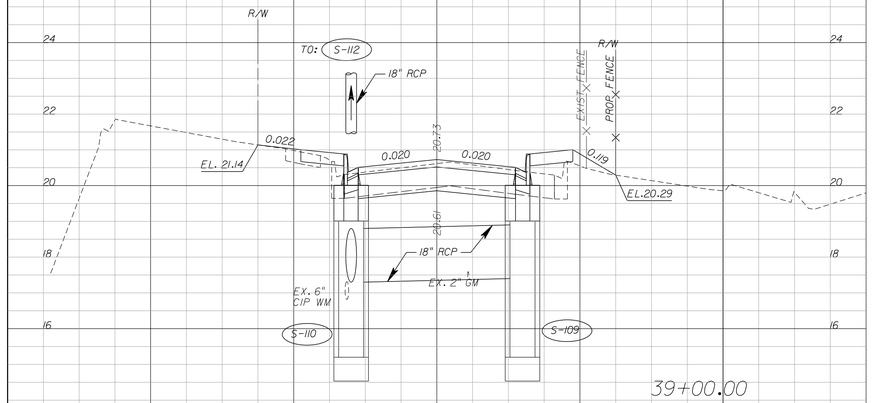

39+00.00

38+80.84

Regular Exc.		Embankment	
A	V	A	V
20.2	15.9	3.1	2.8
24.6	6.1	4.7	0.7

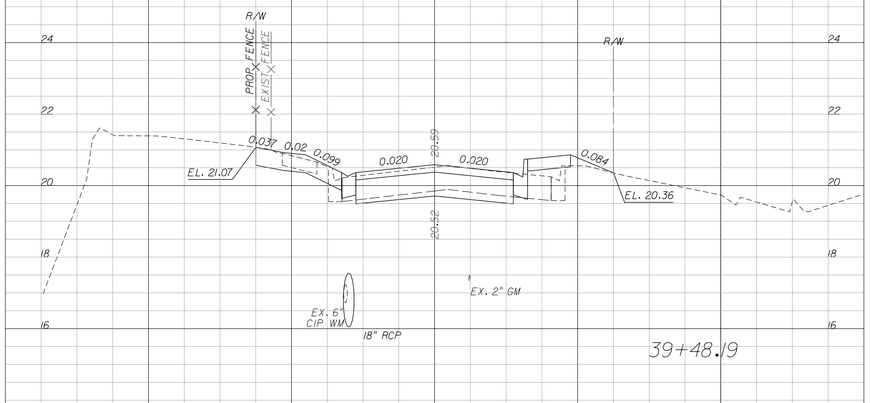

39+48.19

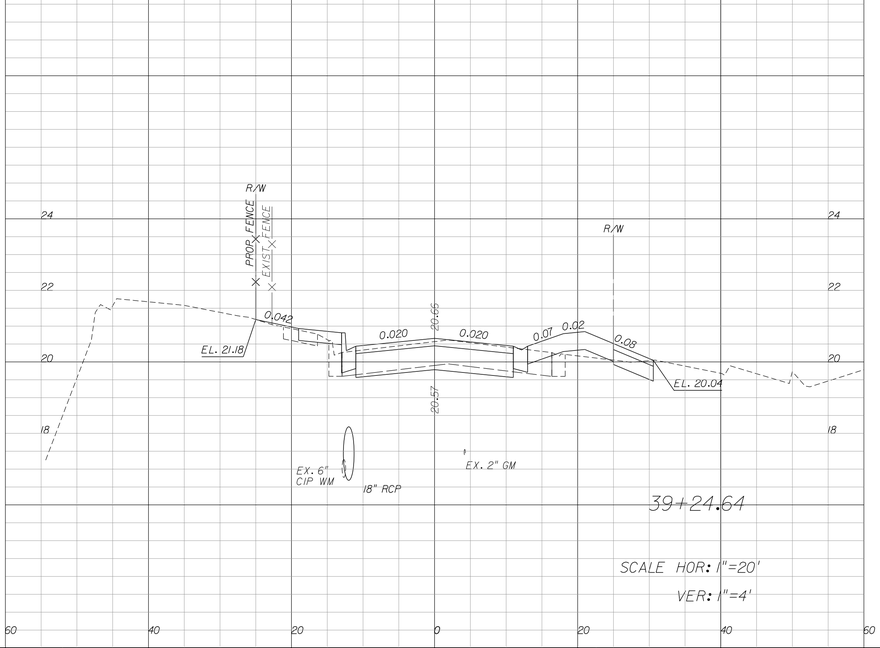

39+24.64

Regular Exc.		Embankment	
A	V	A	V
25.9	21.6	1.6	1.3
23.6	20.0	1.4	2.0

SCALE HOR: 1"=20'
VER: 1"=4'

50 40 20 0 20 40 60

REVISIONS					
DATE	BY	DESCRIPTION	DATE	BY	DESCRIPTION

Kimley»Horn
BRIAN A. GOOD, P.E.
P.E. LICENSE NUMBER 56939
601 21ST STREET, SUITE 300
VERO BEACH, FL 32960
(772) 562-7981
CERTIFICATE OF AUTHORIZATION: 00000696

CITY OF FORT PIERCE/
FORT PIERCE REDEVELOPMENT AGENCY

NORTH 17TH STREET IMPROVEMENTS
ORANGE AVENUE TO AVENUE D

CROSS SECTIONS

SHEET NO. 25

mike.forman 10/19/2016 8:46:34 AM K:\VRB_Roadway\47922003\cadd\Phase 1\rdwy\rdxsrd01.dgn

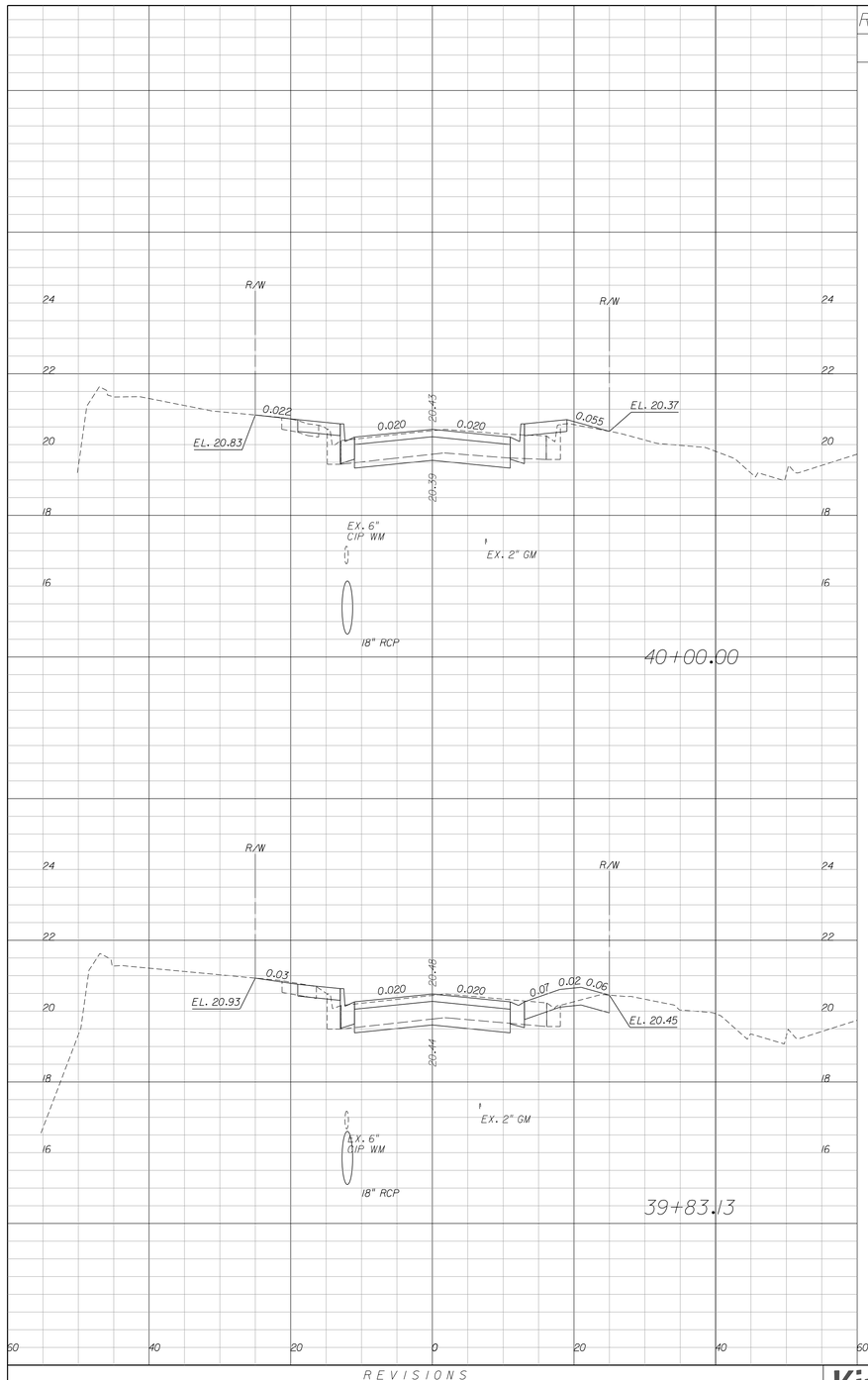

Regular Exc.		Embankment	
A	V	A	V
23.4	15.5	0.9	0.4

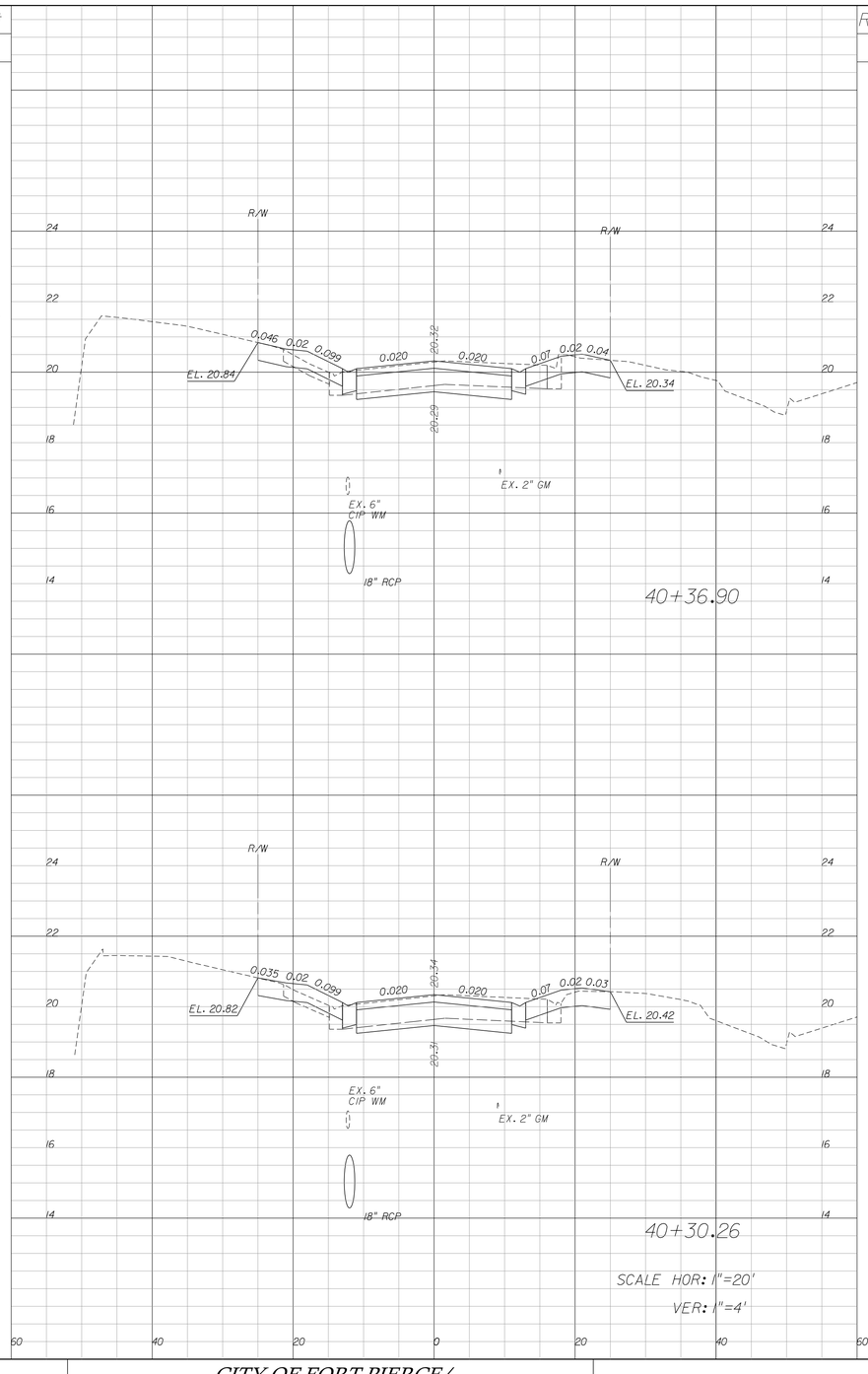

Regular Exc.		Embankment	
A	V	A	V
31.8	7.7	0.0	0.0

26.3	33.8	0.3	1.2

31.1	30.5	0.0	0.5

REVISIONS					
DATE	BY	DESCRIPTION	DATE	BY	DESCRIPTION

Kimley»Horn
BRIAN A. GOOD, P.E.
P.E. LICENSE NUMBER 56939
601 21ST STREET, SUITE 300
VERO BEACH, FL 32960
(772) 562-7981
CERTIFICATE OF AUTHORIZATION: 00000696

CITY OF FORT PIERCE/
FORT PIERCE REDEVELOPMENT AGENCY

NORTH 17TH STREET IMPROVEMENTS
ORANGE AVENUE TO AVENUE D

CROSS SECTIONS

SHEET NO. 26

mike.forman 10/19/2016 8:46:45 AM K:\VRB_Roadway\47922003\cadd\Phase 1\rdwy\rdxsrd01.dgn

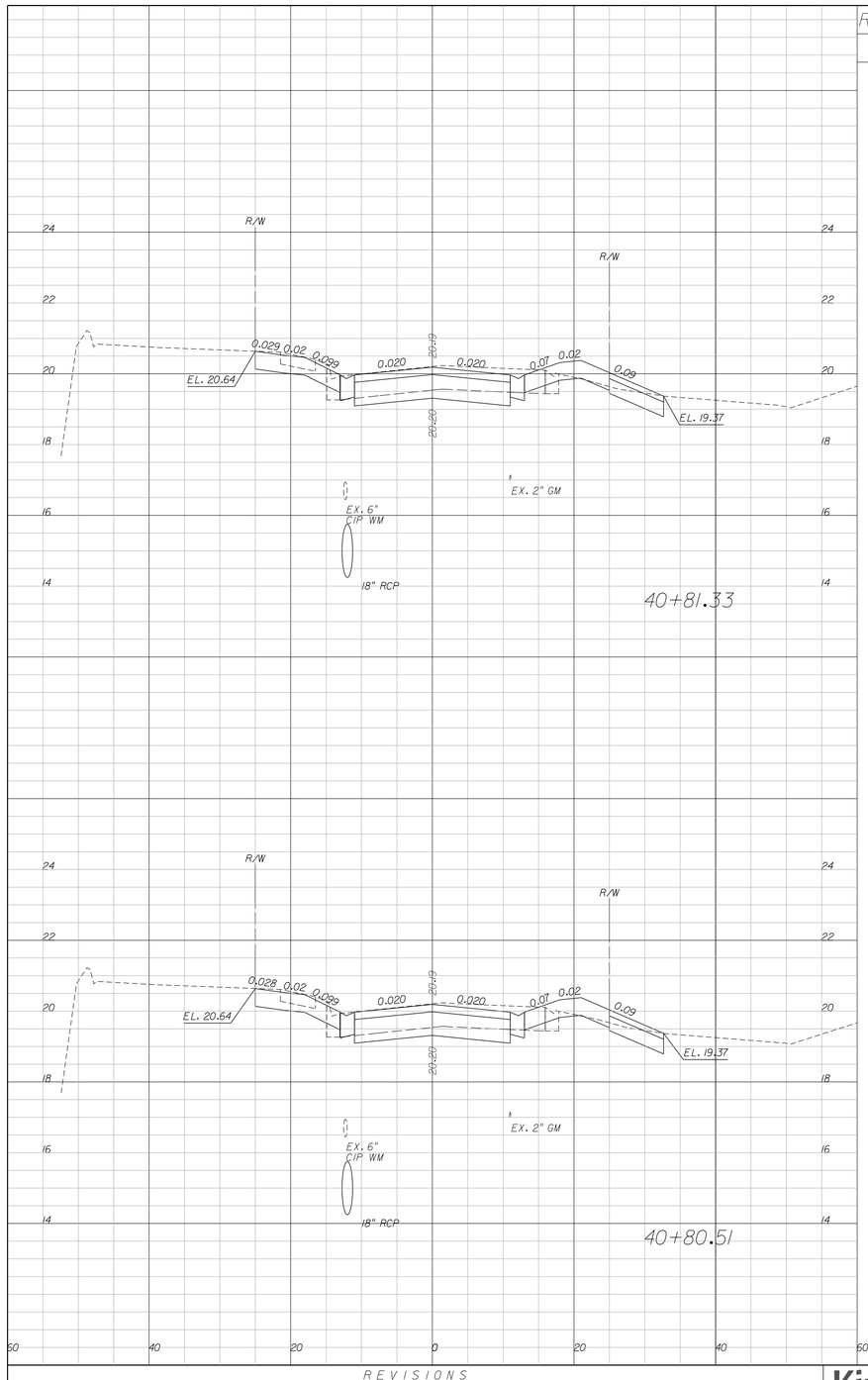

Regular Exc.		Embankment	
A	V	A	V
35.4	1.1	0.0	0.0

Regular Exc.		Embankment	
A	V	A	V
35.5	54.3	0.0	0.0

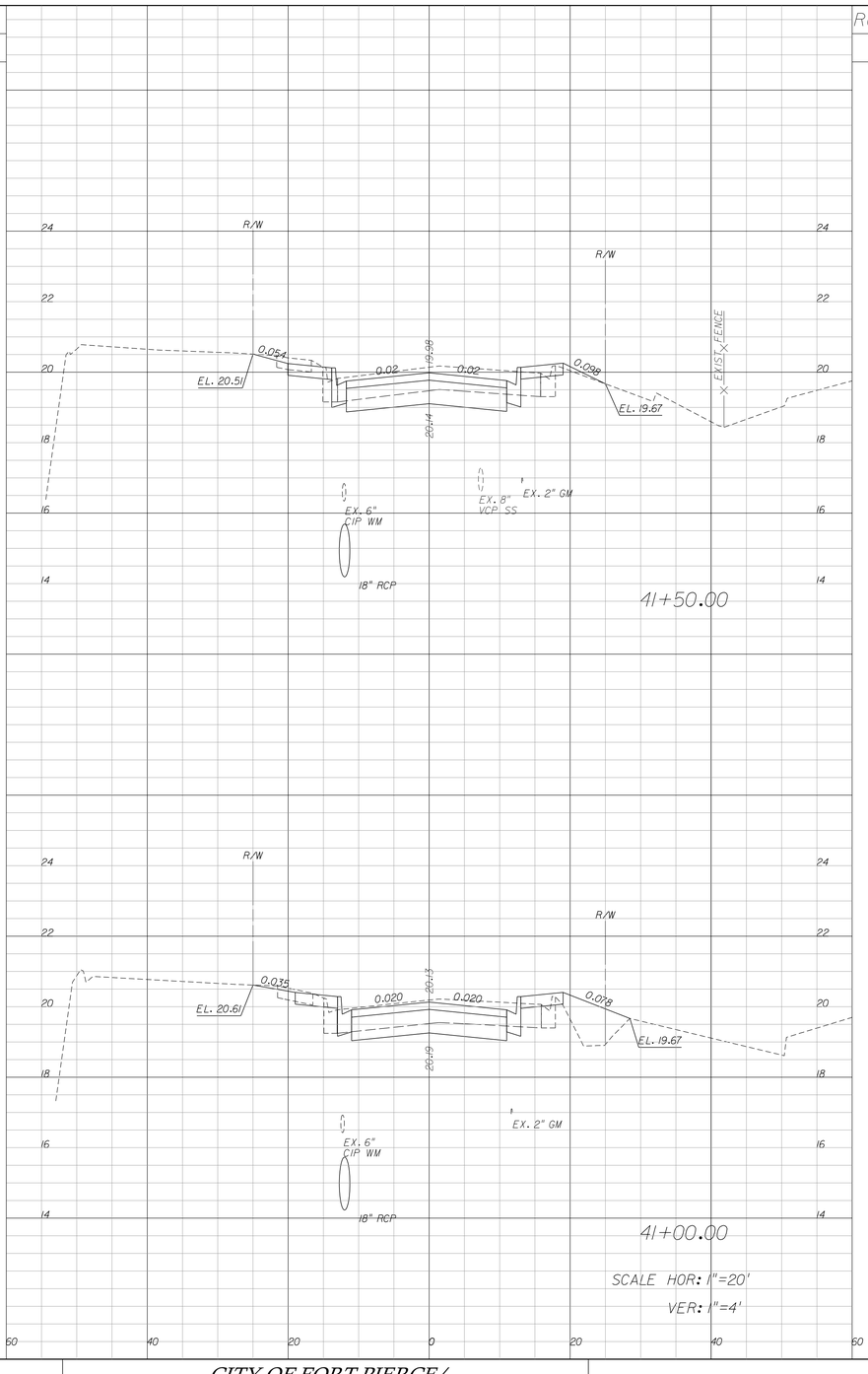

Regular Exc.		Embankment	
A	V	A	V
31.5	54.3	0.5	7.8

Regular Exc.		Embankment	
A	V	A	V
27.1	21.6	7.9	2.7

REVISIONS					
DATE	BY	DESCRIPTION	DATE	BY	DESCRIPTION

Kimley»Horn
BRIAN A. GOOD, P.E.
P.E. LICENSE NUMBER 56939
601 21ST STREET, SUITE 300
VERO BEACH, FL 32960
(772) 562-7981
CERTIFICATE OF AUTHORIZATION: 00000696

CITY OF FORT PIERCE/
FORT PIERCE REDEVELOPMENT AGENCY

NORTH 17TH STREET IMPROVEMENTS
ORANGE AVENUE TO AVENUE D

CROSS SECTIONS

SHEET NO. 27

mike.forman 10/19/2016 8:46:56 AM K:\VRB_Roadway\47922003\cadd\Phase 1\rdwy\rdxsrd01.dgn

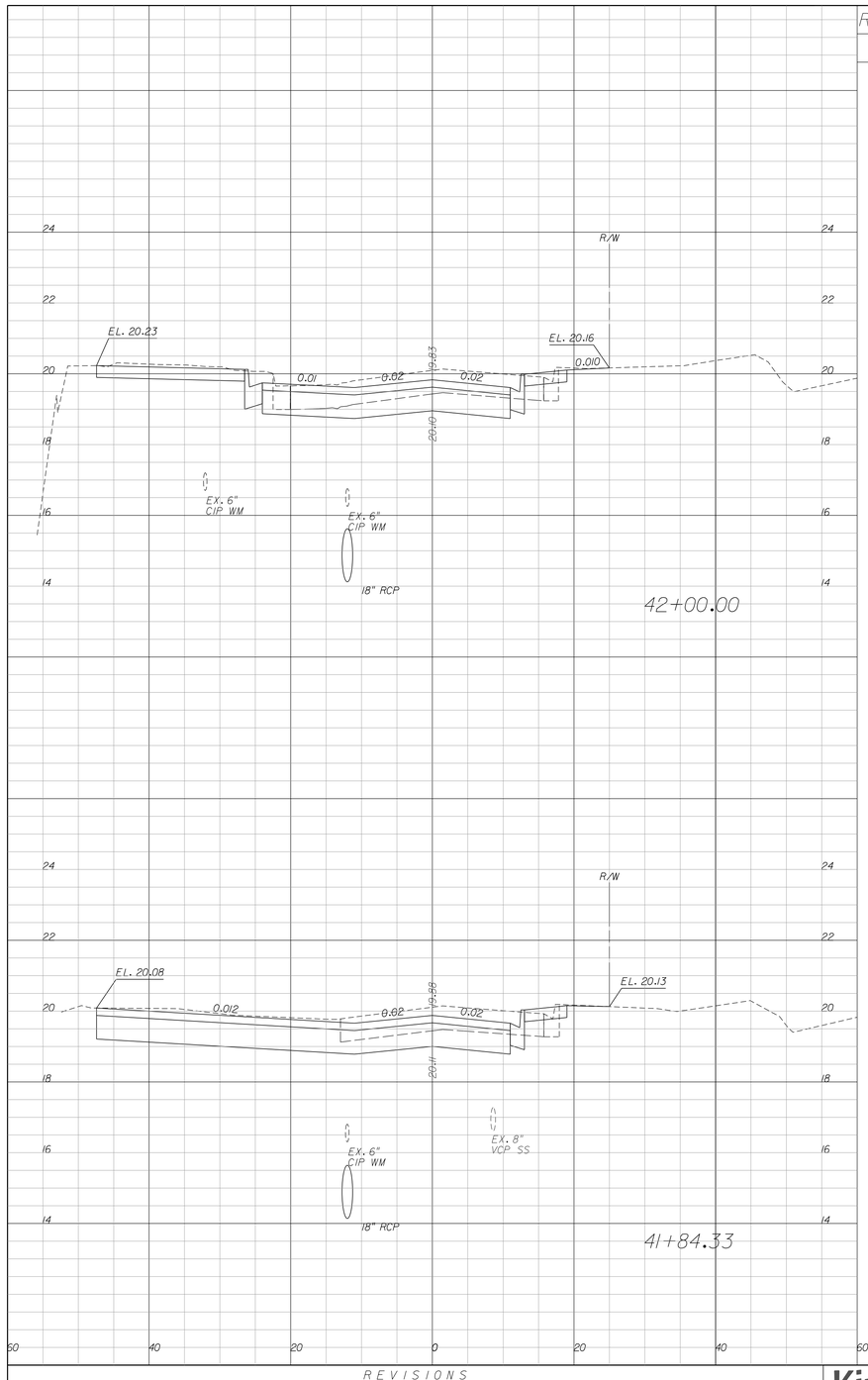

Regular Exc.		Embankment	
A	V	A	V
52.0	33.2	0.0	0.0

62.5	59.8	0.0	0.3

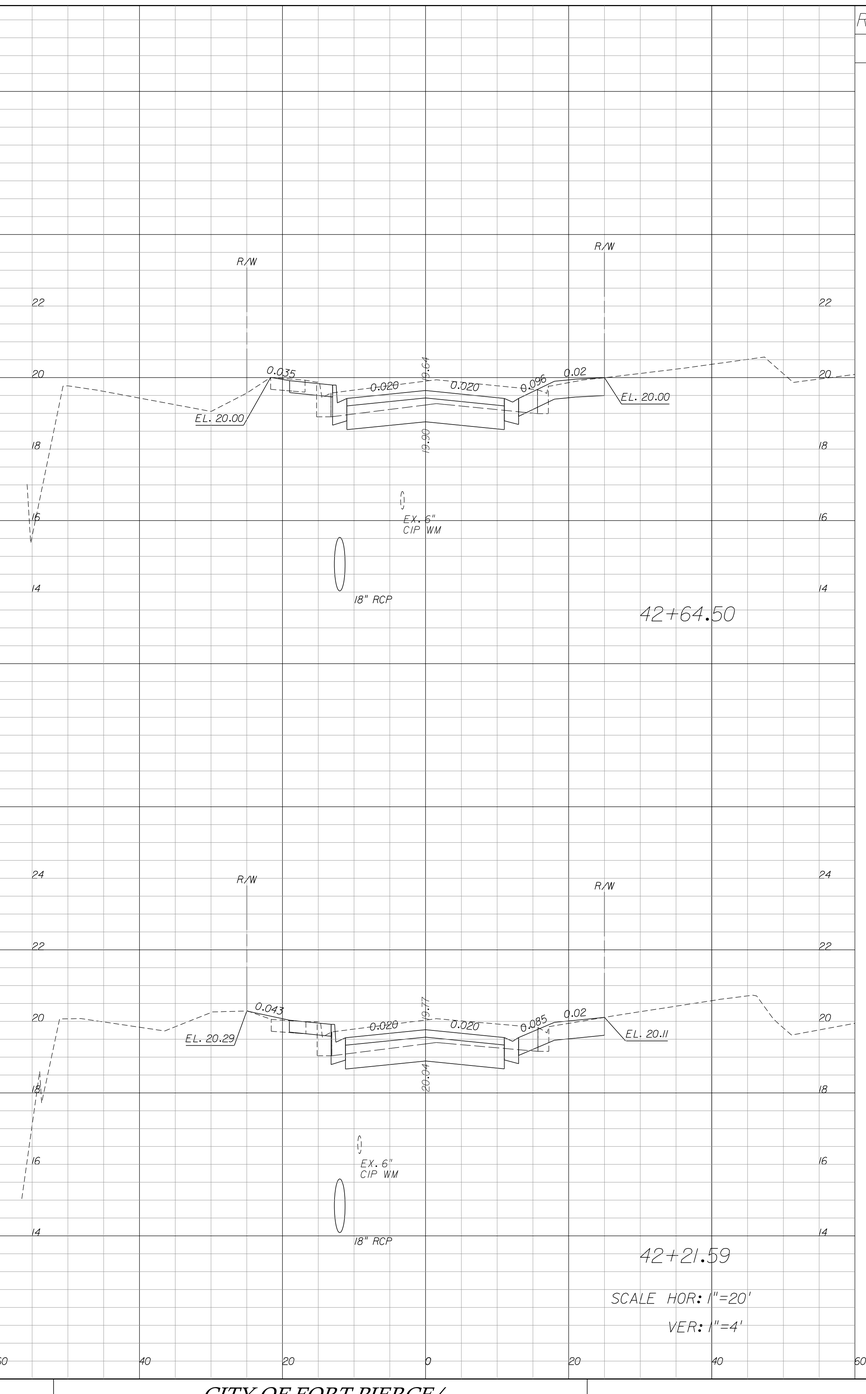

36.7	58.8	0.0	0.2

37.3	35.7	0.3	0.1

REVISIONS					
DATE	BY	DESCRIPTION	DATE	BY	DESCRIPTION

Kimley»Horn
BRIAN A. GOOD, P.E.
P.E. LICENSE NUMBER 56939
6012IST STREET, SUITE 300
VERO BEACH, FL 32960
(772) 562-7981
CERTIFICATE OF AUTHORIZATION: 00000696

CITY OF FORT PIERCE/
FORT PIERCE REDEVELOPMENT AGENCY

NORTH 17TH STREET IMPROVEMENTS
ORANGE AVENUE TO AVENUE D

CROSS SECTIONS

SHEET NO.
28

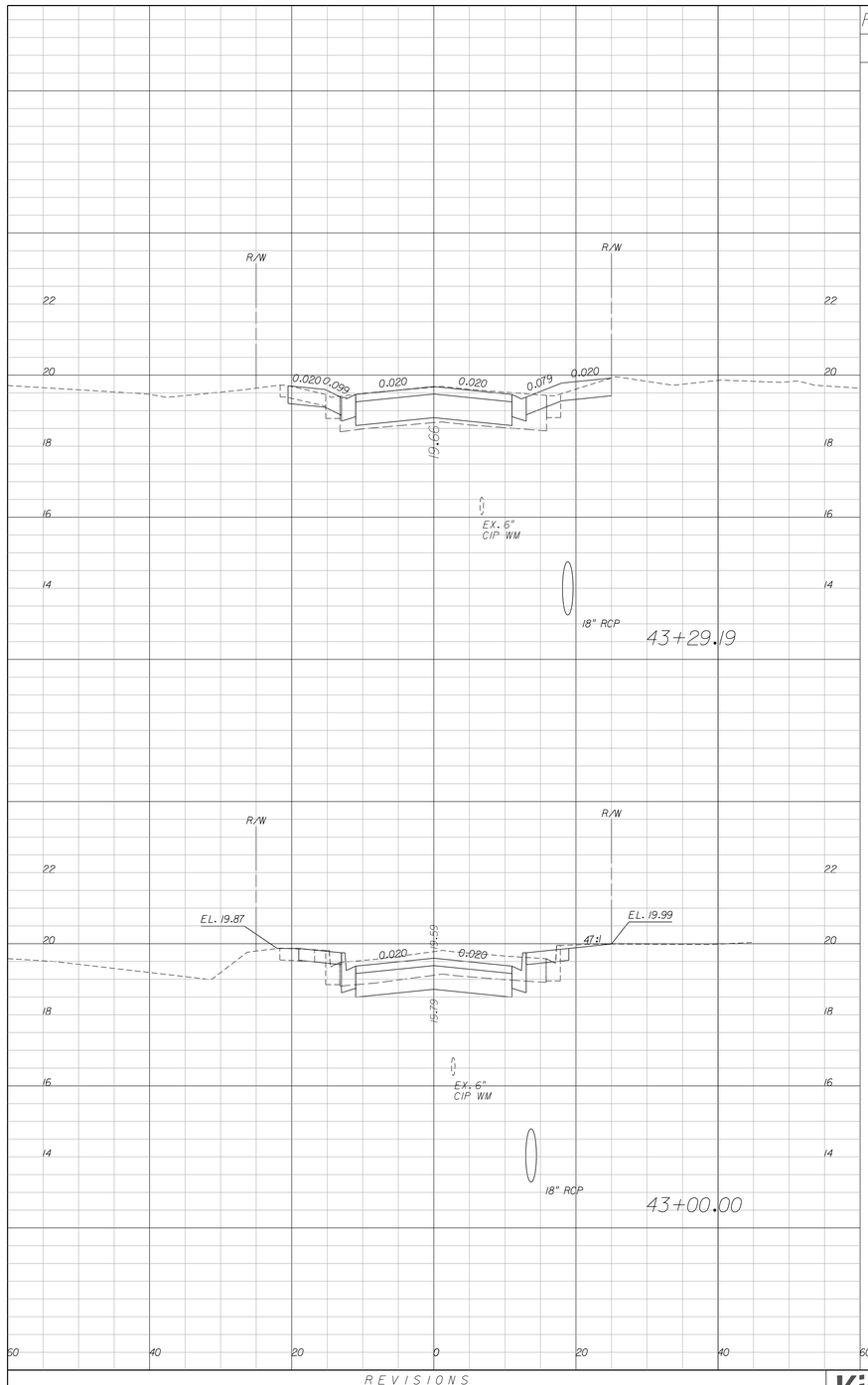

Regular Exc.		Embankment	
A	V	A	V
29.8	32.5	0.0	0.0

Regular Exc.		Embankment	
A	V	A	V
30.3	44.0	0.1	0.0

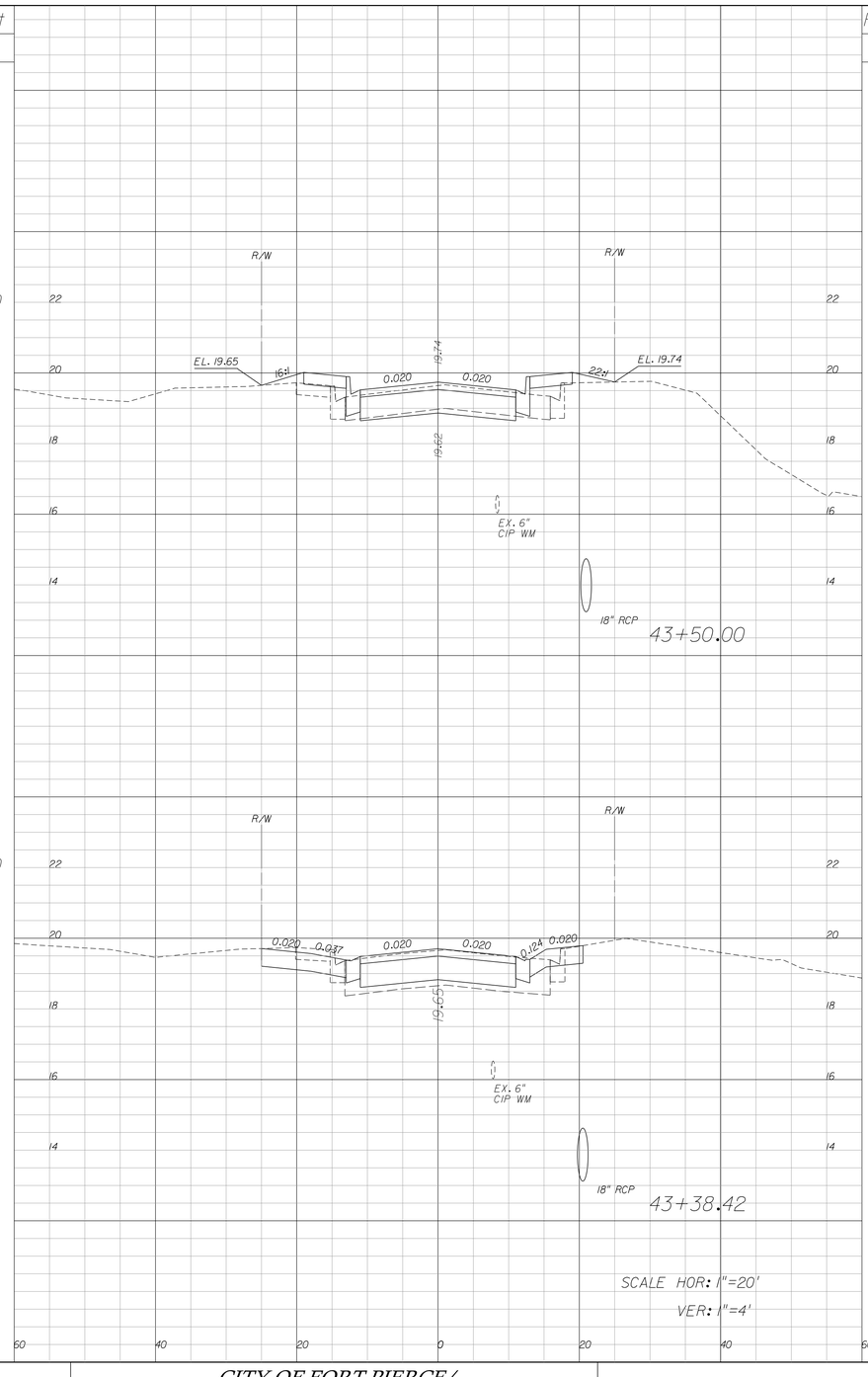

Regular Exc.		Embankment	
A	V	A	V
19.5	10.8	3.4	0.7

Regular Exc.		Embankment	
A	V	A	V
30.8	10.4	0.0	0.0

50 40 20 0 20 40 60

SCALE HOR: 1"=20'
VER: 1"=4'

REVISIONS					
DATE	BY	DESCRIPTION	DATE	BY	DESCRIPTION

Kimley»Horn
BRIAN A. GOOD, P.E.
P.E. LICENSE NUMBER 56939
601 21ST STREET, SUITE 300
VERO BEACH, FL 32960
(772) 562-7981
CERTIFICATE OF AUTHORIZATION: 00000696

CITY OF FORT PIERCE/
FORT PIERCE REDEVELOPMENT AGENCY

NORTH 17TH STREET IMPROVEMENTS
ORANGE AVENUE TO AVENUE D

CROSS SECTIONS

SHEET NO. 29

mike.forman 10/19/2016 8:47:17 AM K:\VRB_Roadway\47922003\cadd\Phase 1\rdwy\rdxsrd01.dgn

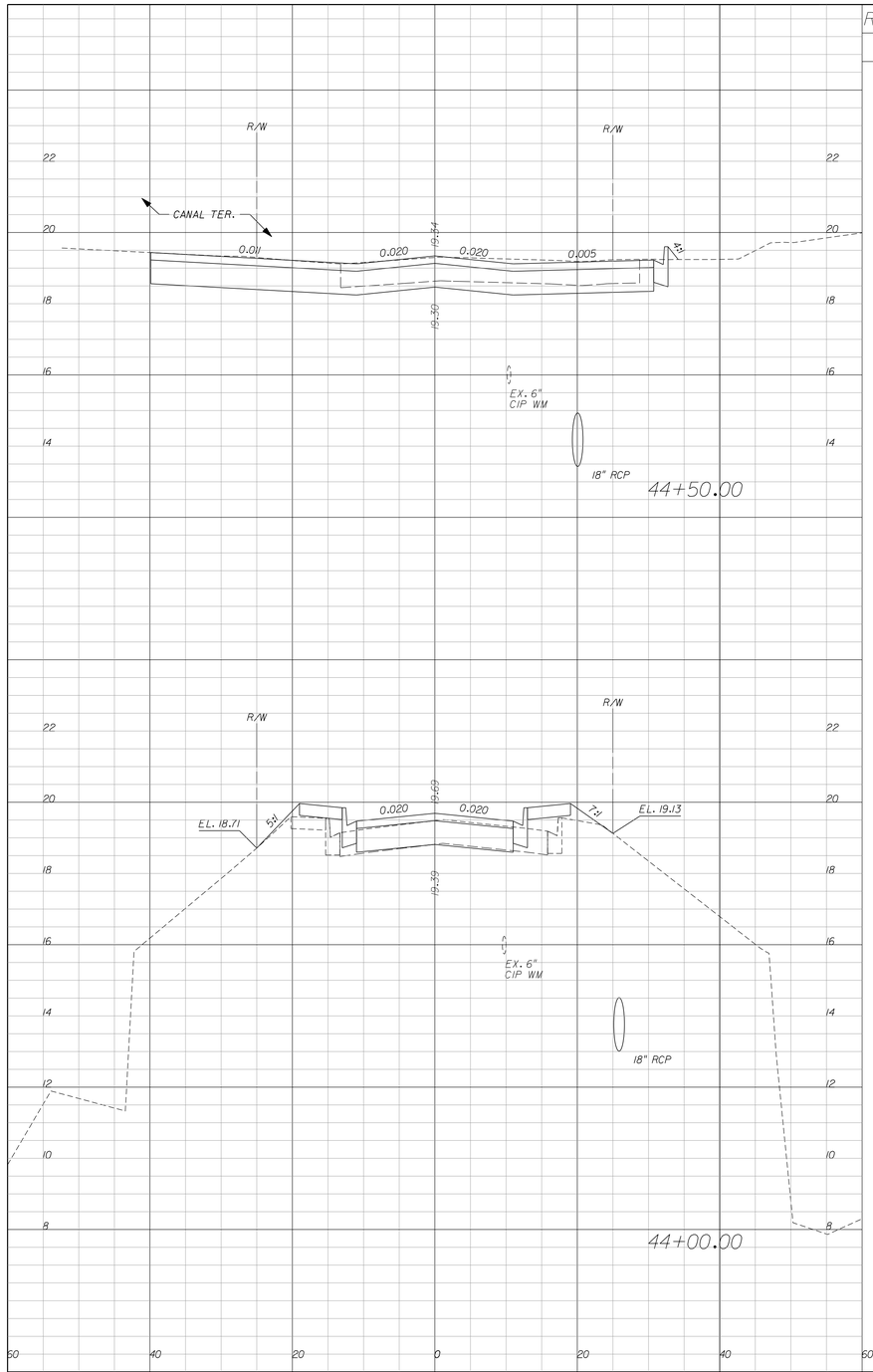

Regular Exc.		Embankment	
A	V	A	V
64.8	75.5	0.3	4.0
16.8	33.6	4.0	6.9

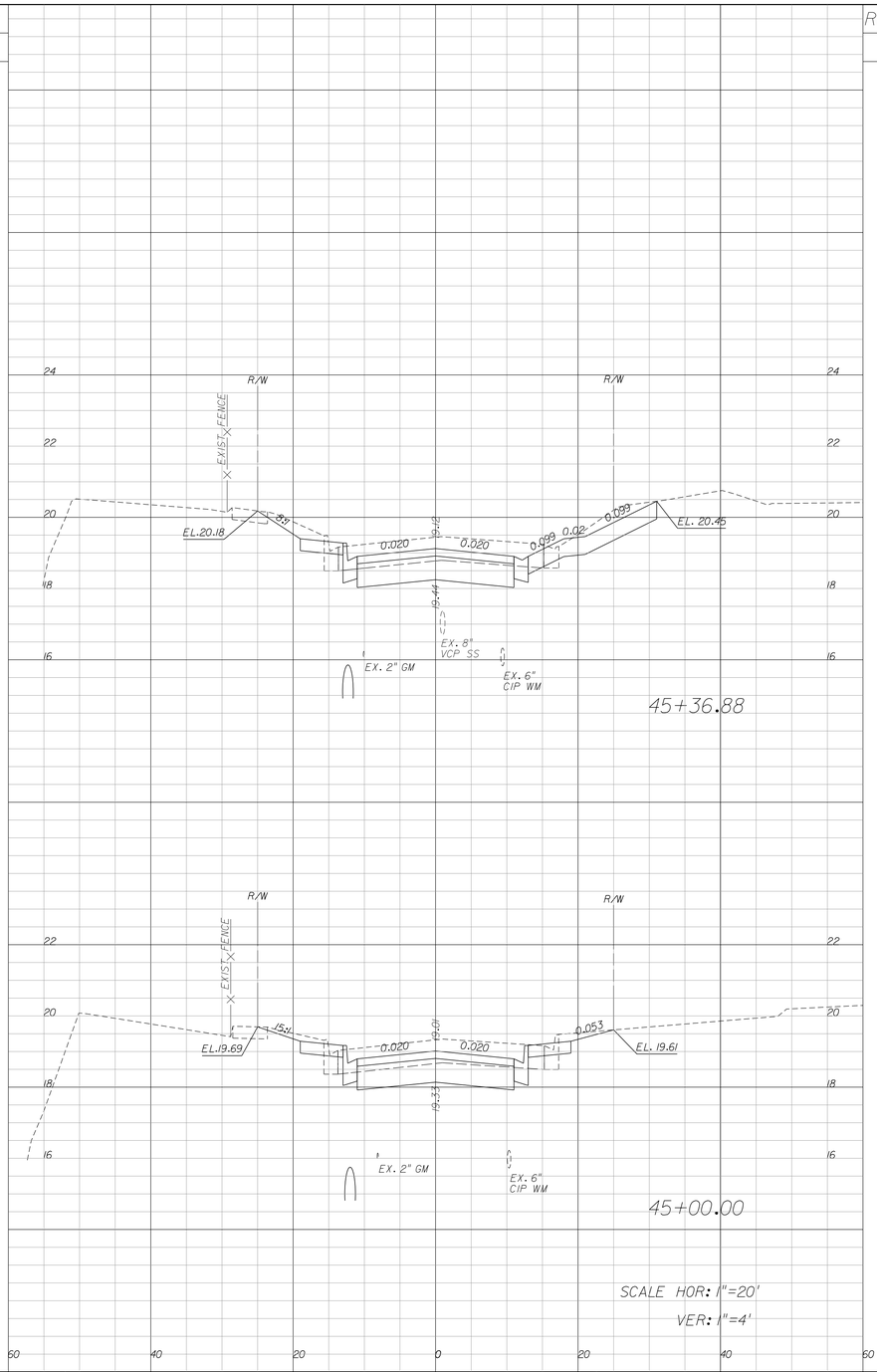

Regular Exc.		Embankment	
A	V	A	V
46.8	57.0	0.0	0.0
36.7	94.0	0.0	0.2

SCALE HOR: 1"=20'
VER: 1"=4'

REVISIONS					
DATE	BY	DESCRIPTION	DATE	BY	DESCRIPTION

Kimley»Horn
BRIAN A. GOOD, P.E.
P.E. LICENSE NUMBER 56939
601 21ST STREET, SUITE 300
VERO BEACH, FL 32960
(772) 562-7981
CERTIFICATE OF AUTHORIZATION: 00000696

CITY OF FORT PIERCE/
FORT PIERCE REDEVELOPMENT AGENCY

NORTH 17TH STREET IMPROVEMENTS
ORANGE AVENUE TO AVENUE D

CROSS SECTIONS

SHEET NO. 30

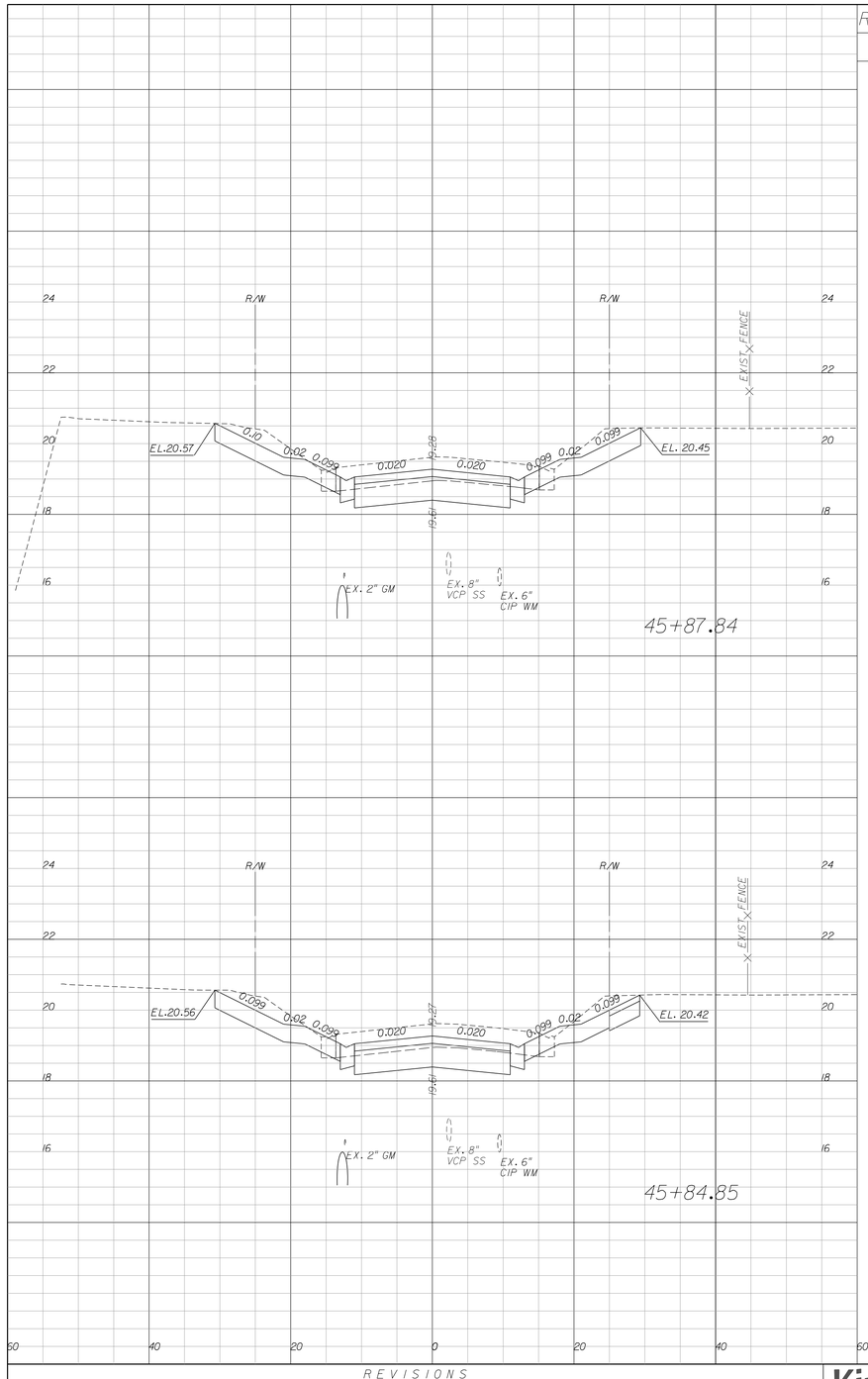

Regular Exc.		Embankment	
A	V	A	V
54.7	6.1	0.0	0.0

Regular Exc.		Embankment	
A	V	A	V
55.0	90.4	0.0	0.0

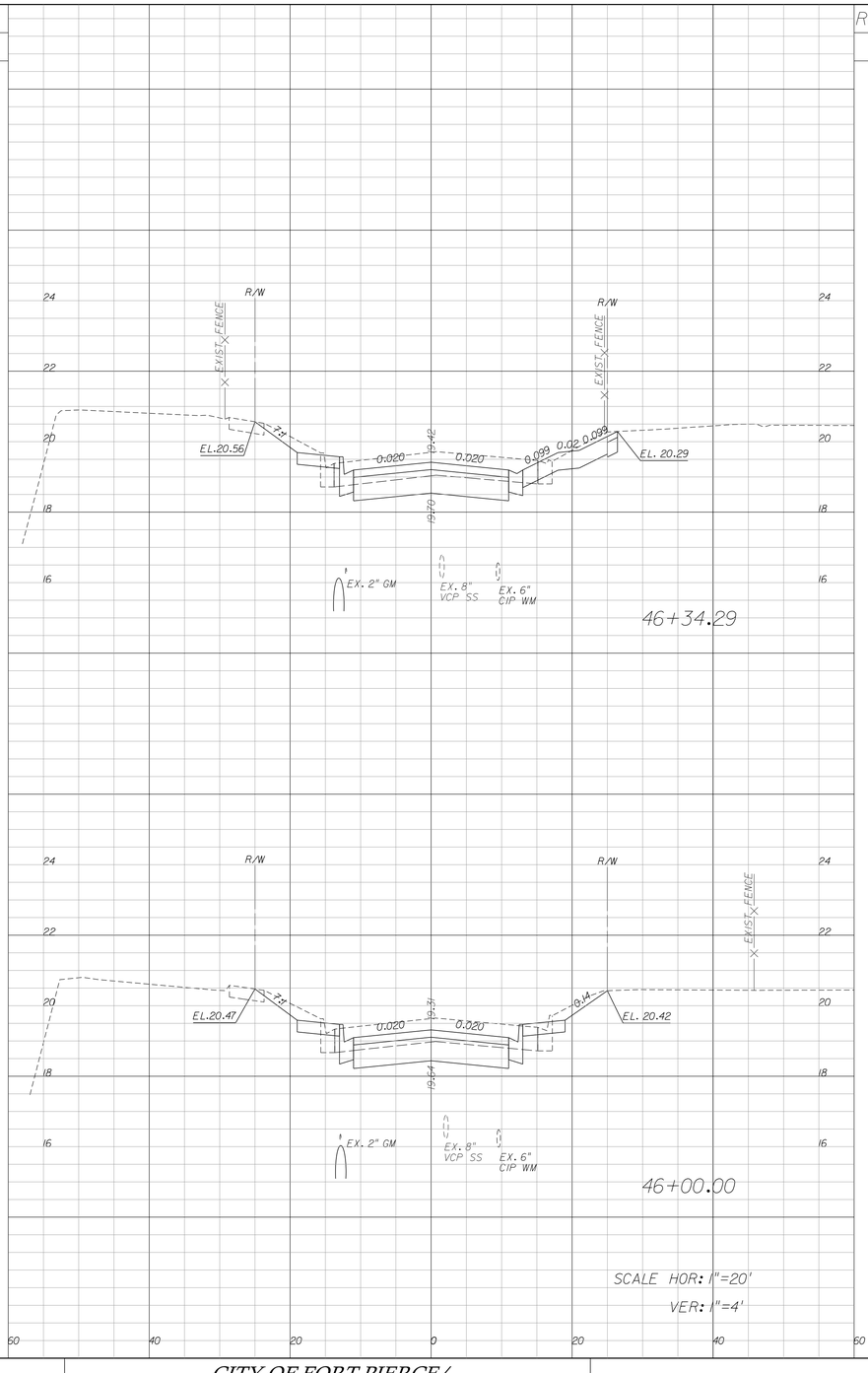

Regular Exc.		Embankment	
A	V	A	V
40.6	49.7	0.0	0.0

Regular Exc.		Embankment	
A	V	A	V
37.7	20.8	0.0	0.0

REVISIONS					
DATE	BY	DESCRIPTION	DATE	BY	DESCRIPTION

Kimley»Horn
BRIAN A. GOOD, P.E.
P.E. LICENSE NUMBER 56939
601 21ST STREET, SUITE 300
VERO BEACH, FL 32960
(772) 562-7981
CERTIFICATE OF AUTHORIZATION: 00000696

CITY OF FORT PIERCE/
FORT PIERCE REDEVELOPMENT AGENCY

NORTH 17TH STREET IMPROVEMENTS
ORANGE AVENUE TO AVENUE D

CROSS SECTIONS

SHEET NO. 31

mike.forman 10/19/2016 8:47:39 AM K:\VRB_Roadway\47922003\cadd\Phase 1\rdwy\rdxsrd01.dgn

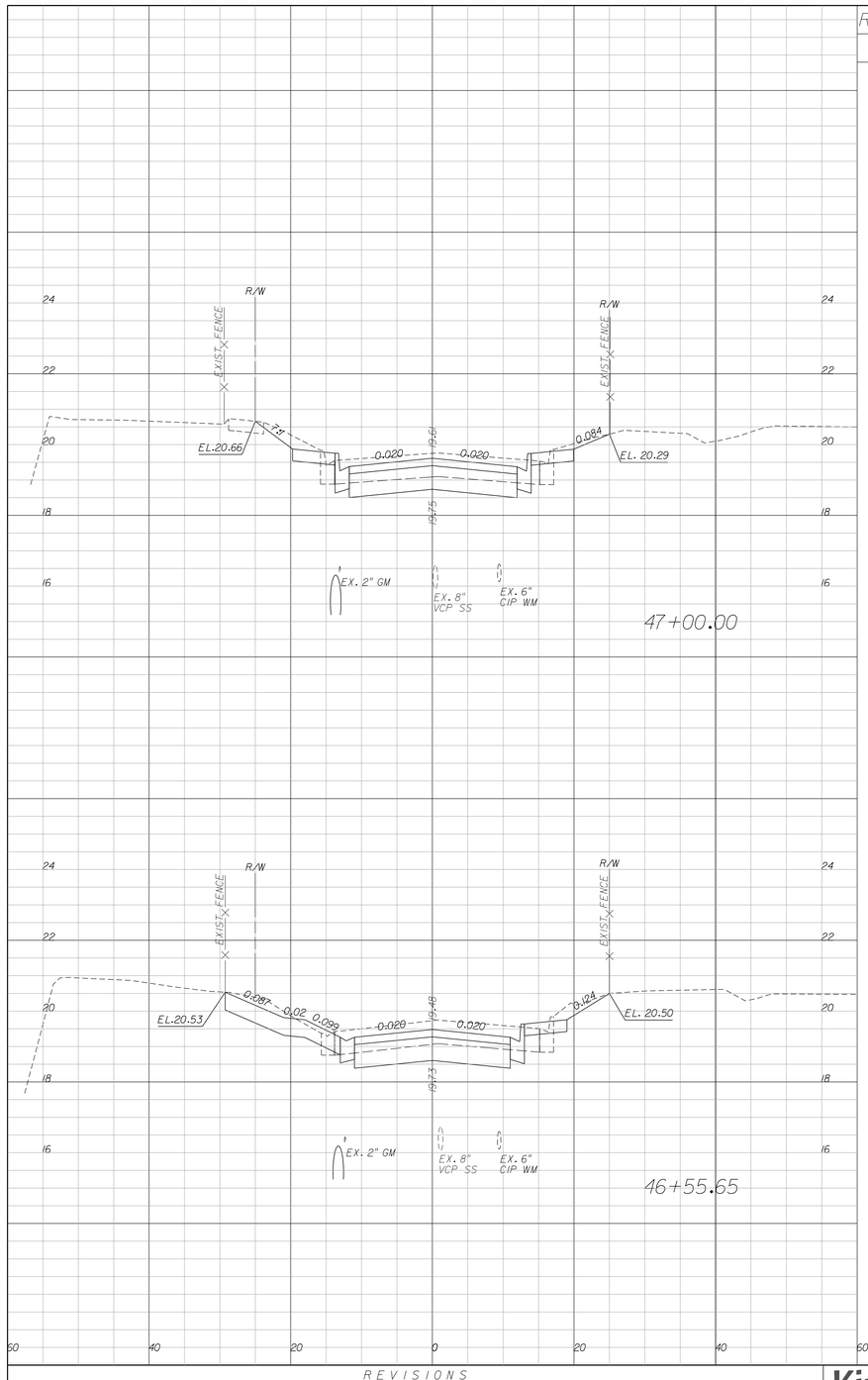

47+00.00

Regular Exc.		Embankment	
A	V	A	V
34.2	61.9	0.0	0.0

46+55.65

Regular Exc.		Embankment	
A	V	A	V
41.1	32.3	0.0	0.0

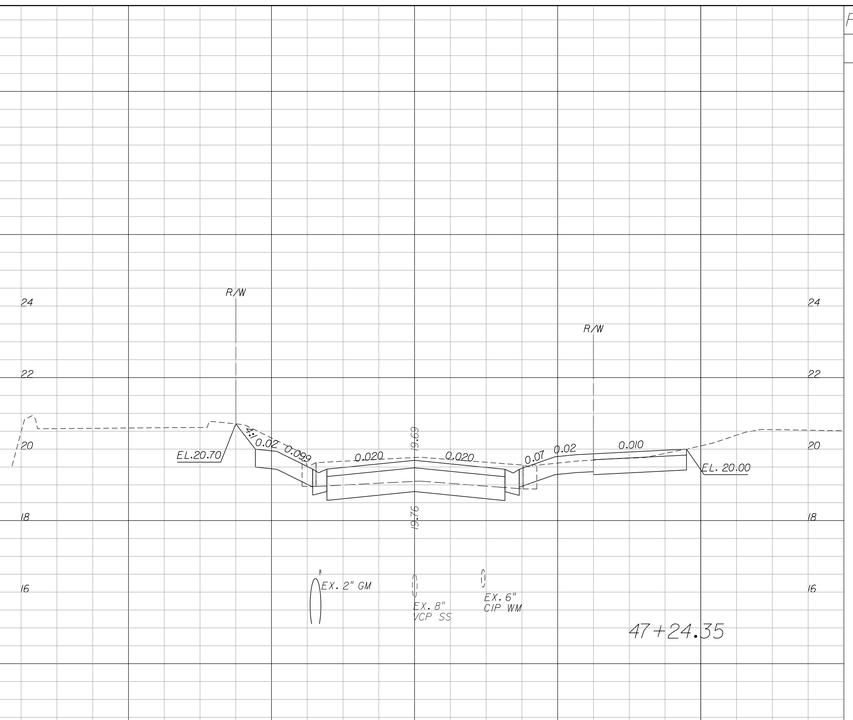

47+24.35

Regular Exc.		Embankment	
A	V	A	V
45.4	11.8	0.0	0.0

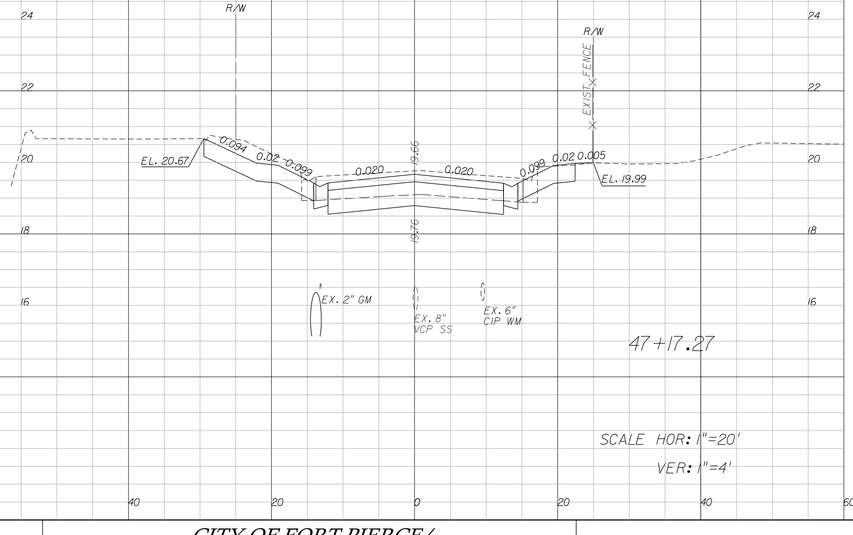

47+17.27

SCALE HOR: 1"=20'
VER: 1"=4'

Regular Exc.		Embankment	
A	V	A	V
44.6	25.2	0.1	0.0

REVISIONS					
DATE	BY	DESCRIPTION	DATE	BY	DESCRIPTION

Kimley»Horn
BRIAN A. GOOD, P.E.
P.E. LICENSE NUMBER 56939
601 21ST STREET, SUITE 300
VERO BEACH, FL 32960
(772) 562-7981
CERTIFICATE OF AUTHORIZATION: 00000696

CITY OF FORT PIERCE/
FORT PIERCE REDEVELOPMENT AGENCY

NORTH 17TH STREET IMPROVEMENTS
ORANGE AVENUE TO AVENUE D

CROSS SECTIONS

SHEET NO. 32

mike.forman 10/19/2016 8:47:50 AM K:\VRB_Roadway\47922003\cadd\Phase 1\rdwy\rdxsrd01.dgn

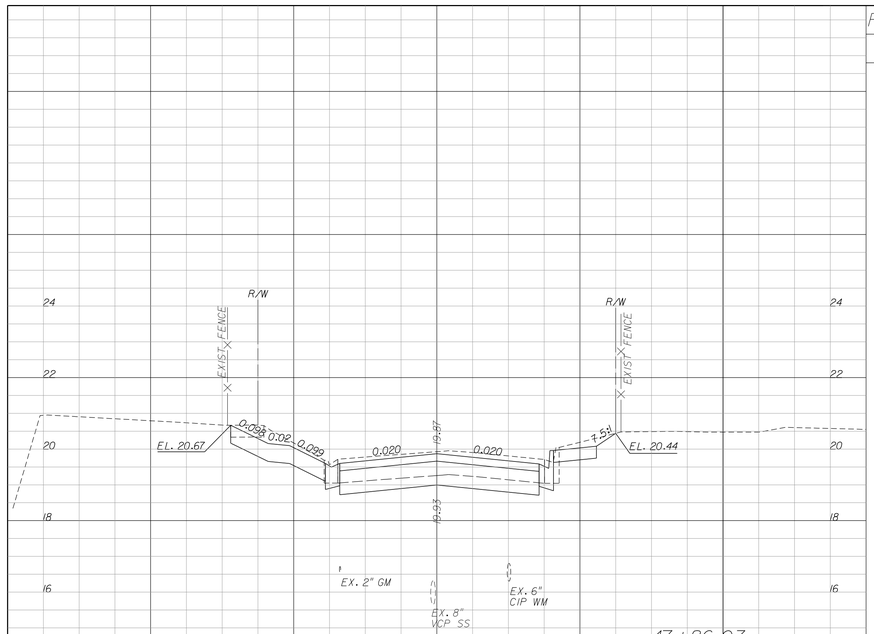

Regular Exc.		Embankment	
A	V	A	V
42.8	61.0	0.0	0.0

Regular Exc.		Embankment	
A	V	A	V
44.7	40.0	0.0	0.0

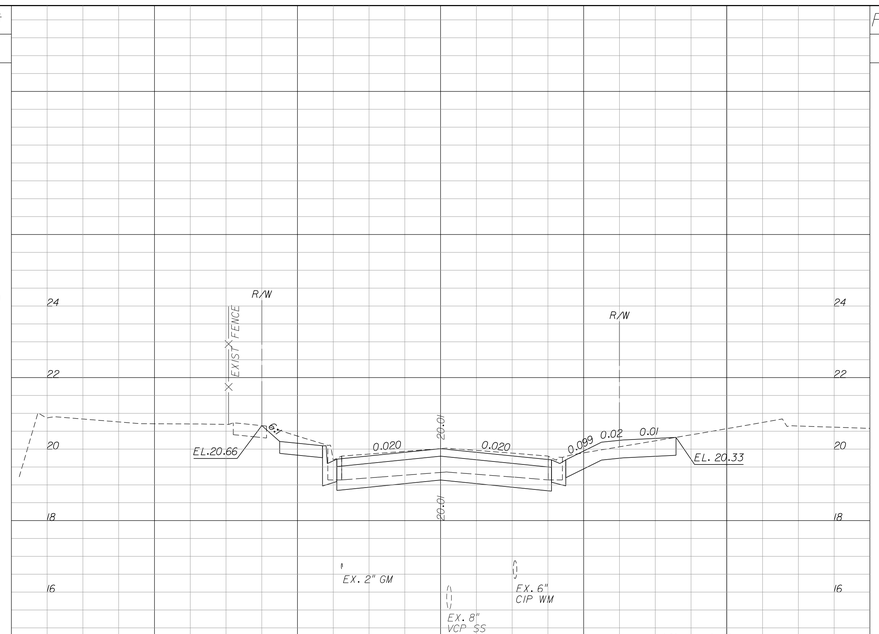

Regular Exc.		Embankment	
A	V	A	V
40.8	46.0	0.0	0.0

Regular Exc.		Embankment	
A	V	A	V
44.7	40.0	0.0	0.0

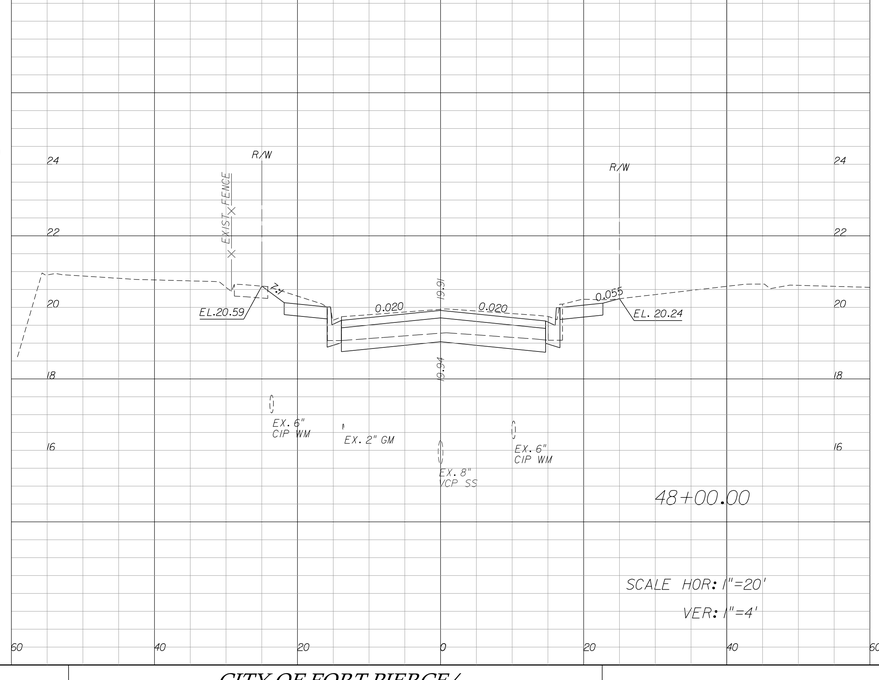

Regular Exc.		Embankment	
A	V	A	V
37.0	20.6	0.0	0.0

50 40 20 0 20 40 60

REVISIONS					
DATE	BY	DESCRIPTION	DATE	BY	DESCRIPTION

Kimley»Horn
BRIAN A. GOOD, P.E.
P.E. LICENSE NUMBER 56939
6012IST STREET, SUITE 300
VERO BEACH, FL 32960
(772) 562-7981
CERTIFICATE OF AUTHORIZATION: 00000696

CITY OF FORT PIERCE/
FORT PIERCE REDEVELOPMENT AGENCY

NORTH 17TH STREET IMPROVEMENTS
ORANGE AVENUE TO AVENUE D

CROSS SECTIONS

SHEET NO. 33

mike.forman 10/19/2016 8:48:01 AM K:\VRB_Roadway\47922003\cadd\Phase 1\rdwy\rdxsrd01.dgn

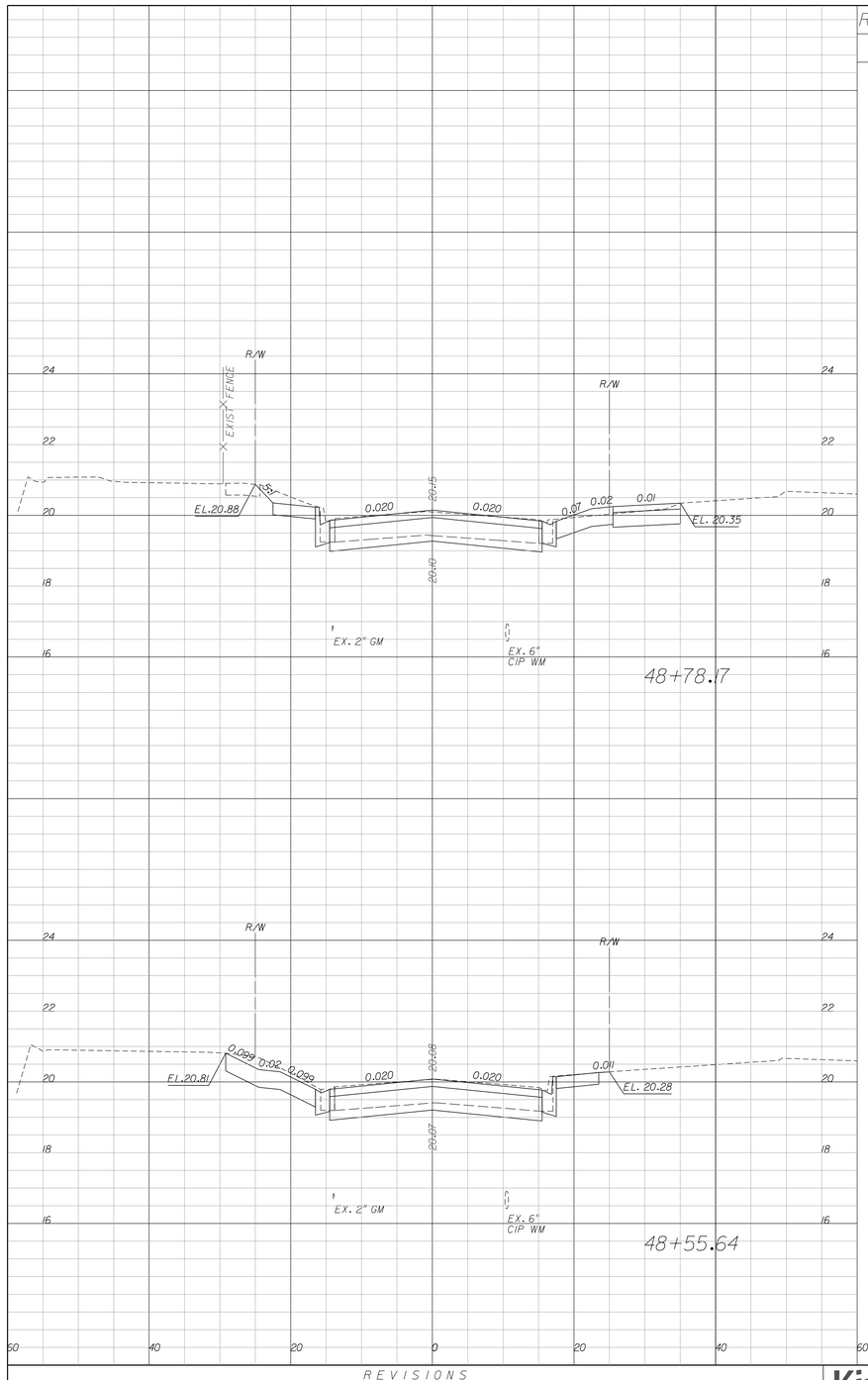

48+78.17

Regular Exc.		Embankment	
A	V	A	V
40.2	33.8	0.0	0.0

48+55.64

Regular Exc.		Embankment	
A	V	A	V
40.7	35.8	0.0	0.0

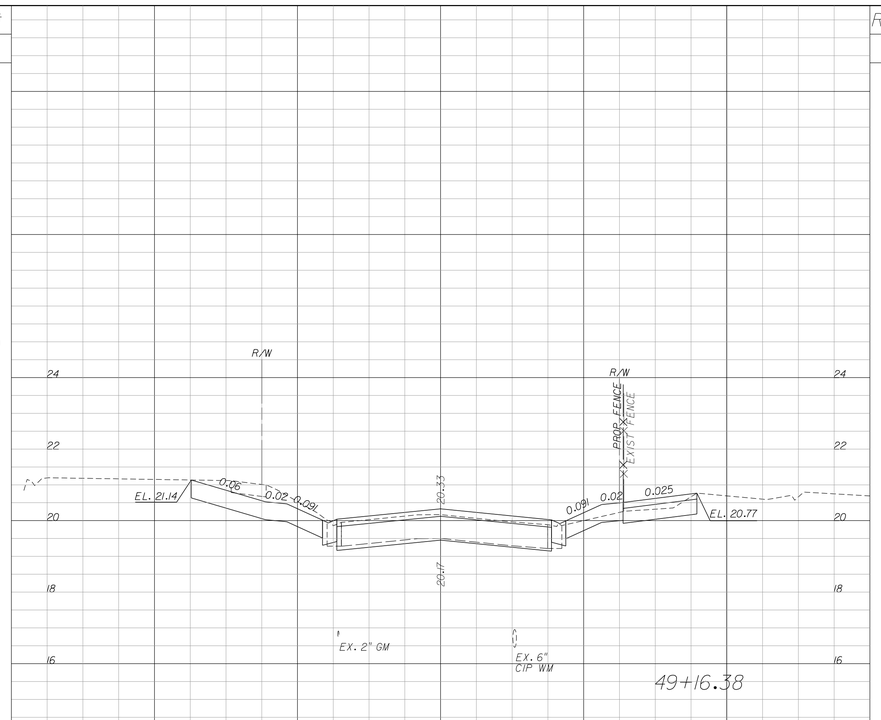

49+16.38

Regular Exc.		Embankment	
A	V	A	V
43.8	23.8	0.0	0.0

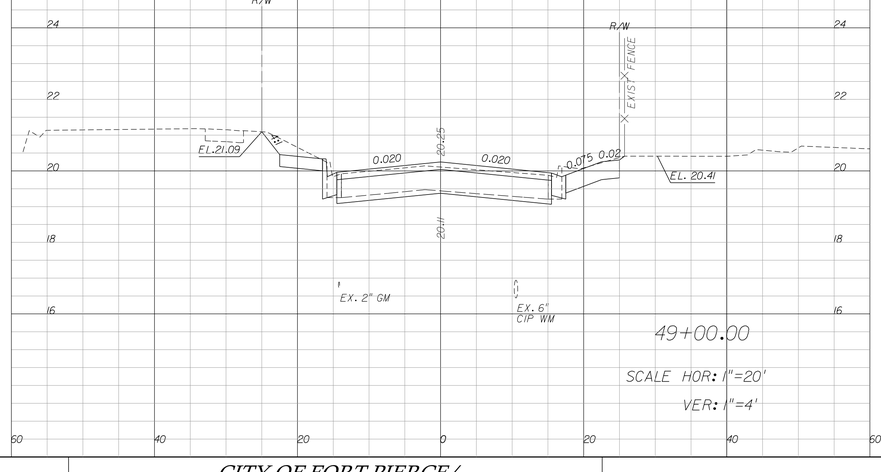

49+00.00

SCALE HOR: 1"=20'

VER: 1"=4'

Regular Exc.		Embankment	
A	V	A	V
34.7	30.3	0.0	0.0

REVISIONS					
DATE	BY	DESCRIPTION	DATE	BY	DESCRIPTION

Kimley»Horn

BRIAN A. GOOD, P.E.
P.E. LICENSE NUMBER 56939
601 21ST STREET, SUITE 300
VERO BEACH, FL 32960
(772) 562-7981
CERTIFICATE OF AUTHORIZATION: 00000696

CITY OF FORT PIERCE/
FORT PIERCE REDEVELOPMENT AGENCY

NORTH 17TH STREET IMPROVEMENTS
ORANGE AVENUE TO AVENUE D

CROSS SECTIONS

SHEET NO. 34

mike.forman 10/19/2016 8:48:13 AM K:\VRB_Roadway\47922003\cadd\Phase 1\rdwy\rdxsrd01.dgn

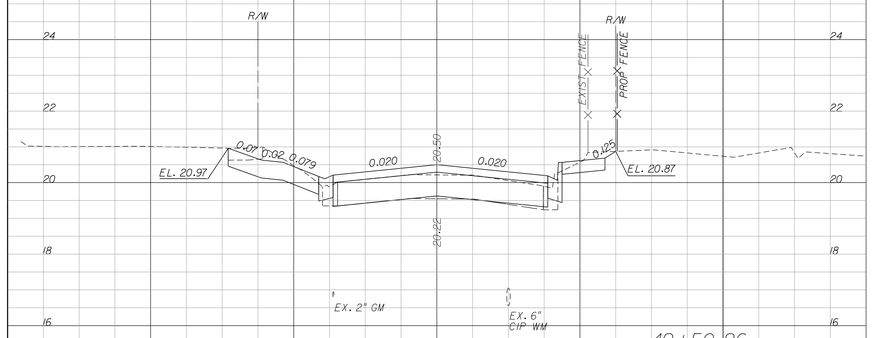

Regular Exc.		Embankment	
A	V	A	V
31.3	39.8	0.0	0.0

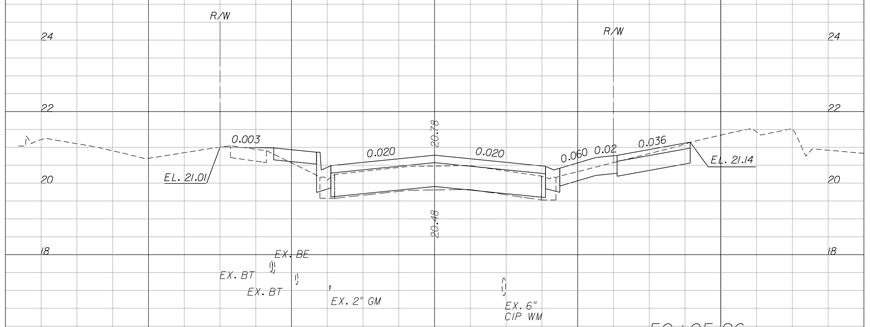

Regular Exc.		Embankment	
A	V	A	V
27.5	6.3	0.9	0.1

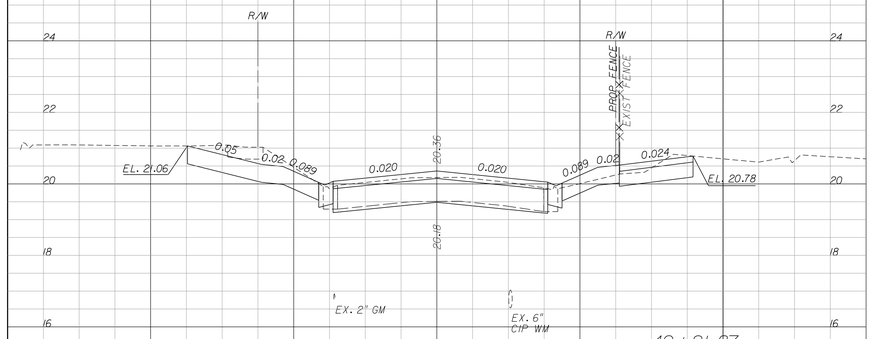

Regular Exc.		Embankment	
A	V	A	V
44.4	9.0	0.0	0.0

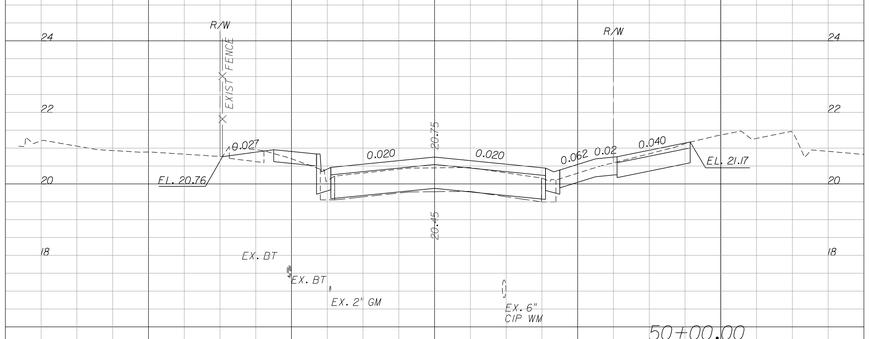

Regular Exc.		Embankment	
A	V	A	V
29.1	55.7	0.1	0.1

REVISIONS					
DATE	BY	DESCRIPTION	DATE	BY	DESCRIPTION

Kimley»Horn
BRIAN A. GOOD, P.E.
P.E. LICENSE NUMBER 56939
601 21ST STREET, SUITE 300
VERO BEACH, FL 32960
(772) 562-7981
CERTIFICATE OF AUTHORIZATION: 00000696

CITY OF FORT PIERCE/
FORT PIERCE REDEVELOPMENT AGENCY

NORTH 17TH STREET IMPROVEMENTS
ORANGE AVENUE TO AVENUE D

CROSS SECTIONS

SHEET NO. 35

mike.forman 10/19/2016 8:48:24 AM K:\VRB_Roadway\47922003\cadd\Phase 1\rdwy\rdxsrd01.dgn

END EARTHWORK
STA. 51+31.81

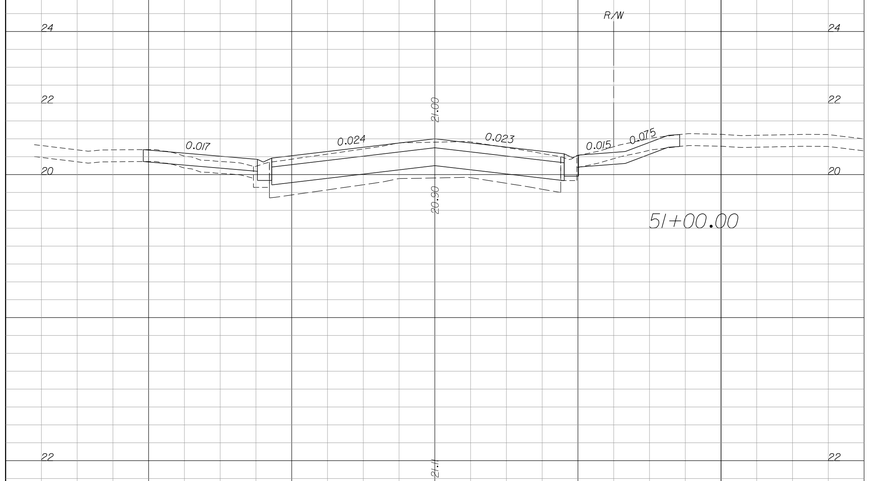

51+00.00

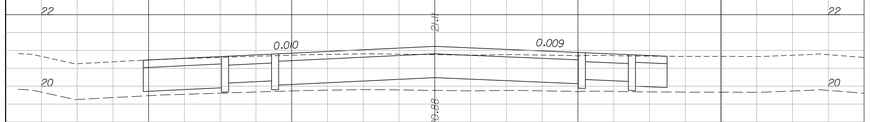

50+72.70

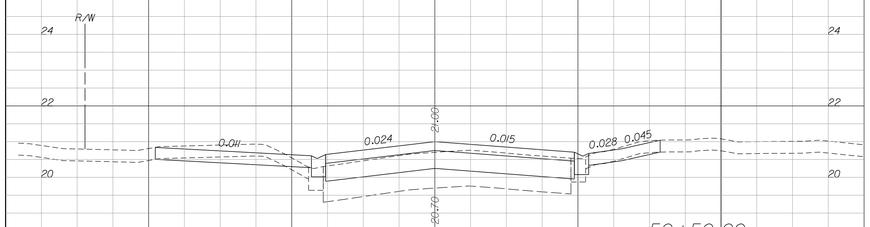

50+50.00

Regular Exc.		Embankment	
A	V	A	V
40.6	47.83	0.0	0.0
40.6	22.4	0.0	3.3
3.8	13.7	6.5	2.7
28.9	46.0	0.0	0.7

EARTHWORK SUMMARY
REGULAR EXCAVATION = 2655 CY
EMBANKMENT = 75 CY

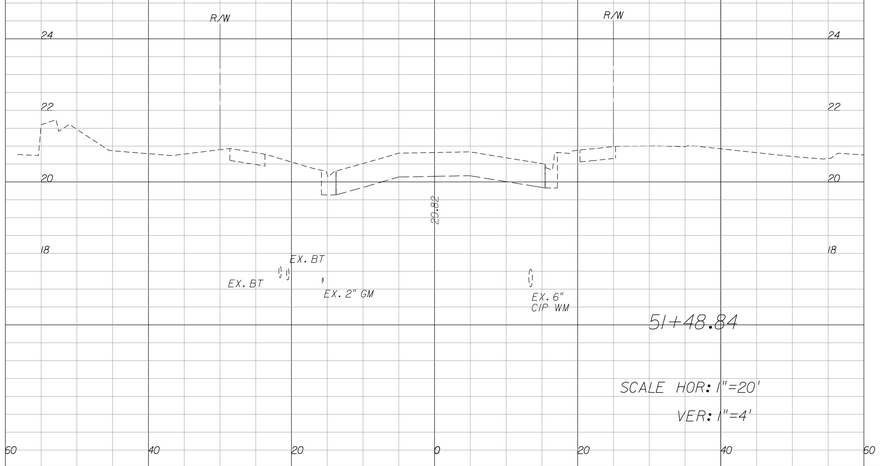

51+48.84

SCALE HOR: 1"=20'
VER: 1"=4'

Regular Exc.		Embankment	
A	V	A	V

REVISIONS

DATE	BY	DESCRIPTION	DATE	BY	DESCRIPTION

Kimley»Horn
BRIAN A. GOOD, P.E.
P.E. LICENSE NUMBER 56939
6012ST STREET, SUITE 300
VERO BEACH, FL 32960
(772) 562-7981
CERTIFICATE OF AUTHORIZATION: 00000696

CITY OF FORT PIERCE/
FORT PIERCE REDEVELOPMENT AGENCY

NORTH 17TH STREET IMPROVEMENTS
ORANGE AVENUE TO AVENUE D

CROSS SECTIONS

SHEET NO.
36

mike.forman 10/19/2016 8:48:35 AM K:\VRB_Roadway\47922003\cadd\Phase 1\rdwy\rdxsrd01.dgn

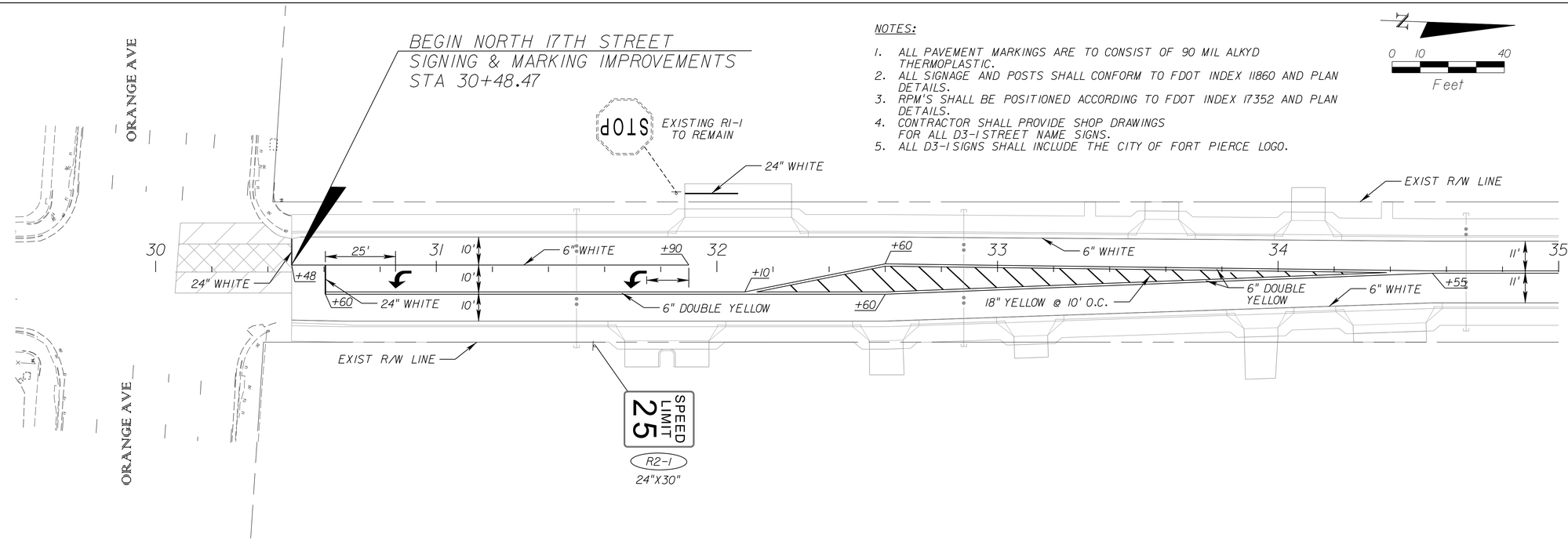

NOTES:

1. ALL PAVEMENT MARKINGS ARE TO CONSIST OF 90 MIL ALKYD THERMOPLASTIC.
2. ALL SIGNAGE AND POSTS SHALL CONFORM TO FDOT INDEX 11860 AND PLAN DETAILS.
3. RPM'S SHALL BE POSITIONED ACCORDING TO FDOT INDEX 17352 AND PLAN DETAILS.
4. CONTRACTOR SHALL PROVIDE SHOP DRAWINGS FOR ALL D3-1 STREET NAME SIGNS.
5. ALL D3-1 SIGNS SHALL INCLUDE THE CITY OF FORT PIERCE LOGO.

N

0 10 40

Feet

NOTES:

1. ALL PAVEMENT MARKINGS ARE TO CONSIST OF 90 MIL ALKYD THERMOPLASTIC.
2. ALL SIGNAGE AND POSTS SHALL CONFORM TO FDOT INDEX 11860 AND PLAN DETAILS.
3. RPM'S SHALL BE POSITIONED ACCORDING TO FDOT INDEX 17352 AND PLAN DETAILS.
4. CONTRACTOR SHALL PROVIDE SHOP DRAWINGS FOR ALL D3-1 STREET NAME SIGNS.
5. ALL D3-1 SIGNS SHALL INCLUDE THE CITY OF FORT PIERCE LOGO.

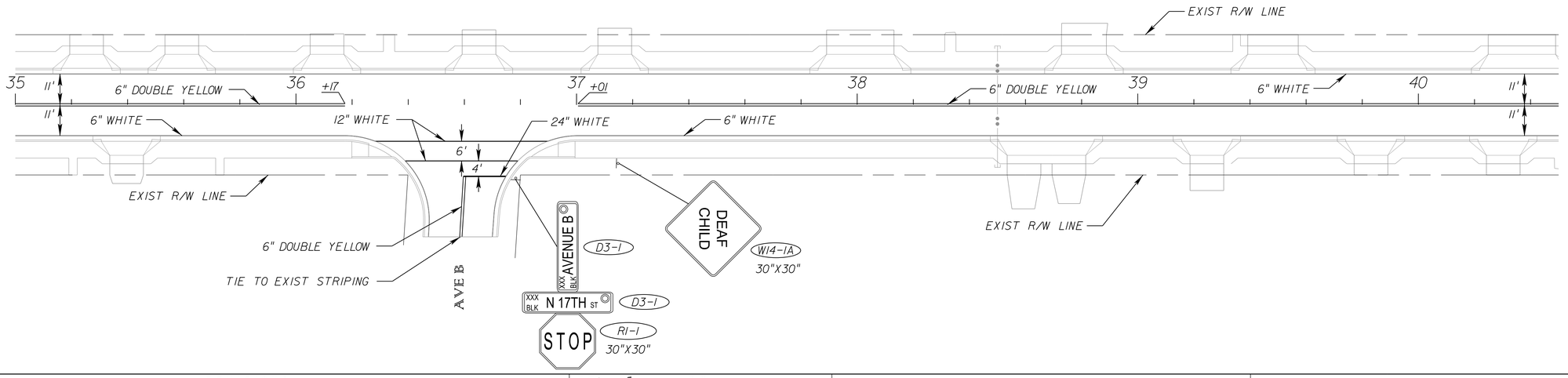

N

0 10 40

Feet

REVISIONS					
DATE	BY	DESCRIPTION	DATE	BY	DESCRIPTION

Kimley»Horn
BRIAN A. GOOD, P.E.
P.E. LICENSE NUMBER 56939
445 24TH STREET, SUITE 200
VERO BEACH, FL 32960
(772) 794-4100
CERTIFICATE OF AUTHORIZATION: 00000696

CITY OF FORT PIERCE/
FORT PIERCE REDEVELOPMENT AGENCY

NORTH 17TH STREET IMPROVEMENTS
ORANGE AVENUE TO AVENUE D

SIGNING AND MARKING

SHEET NO.
38

mike.forman 10/19/2016 8:48:37 AM K:\VRB_Roadway\47922003\cadd\Phase 1\rdwy\PLANSP01.dgn

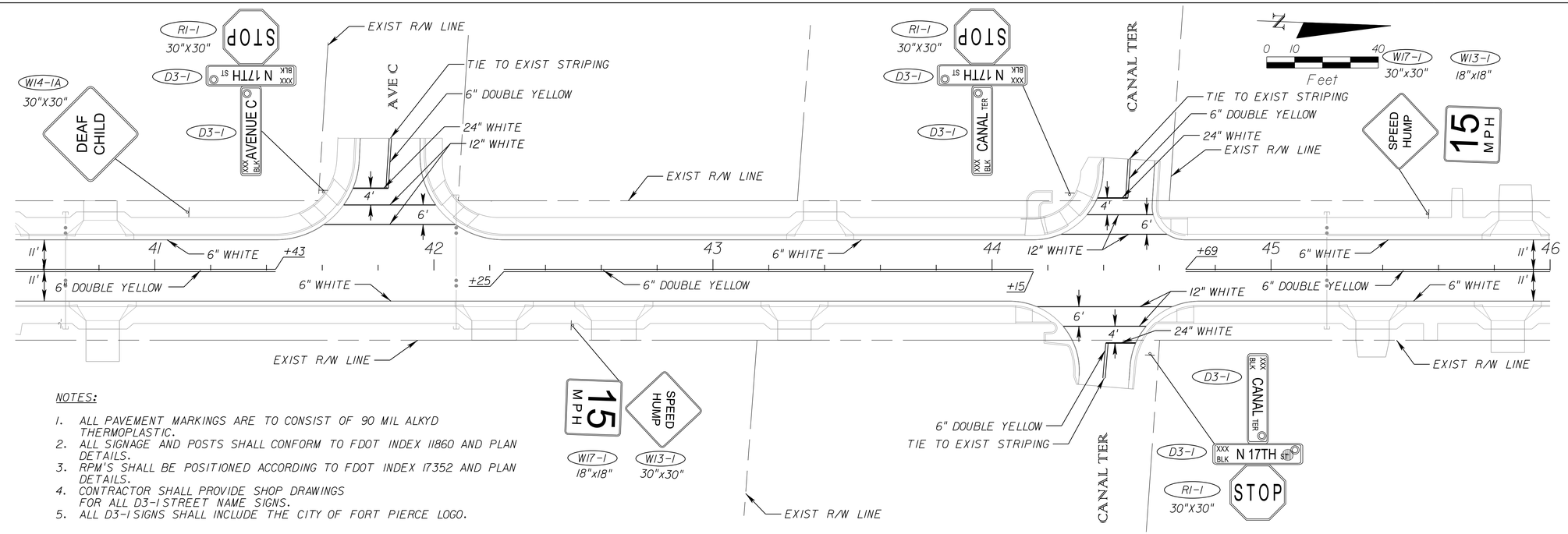

NOTES:

1. ALL PAVEMENT MARKINGS ARE TO CONSIST OF 90 MIL ALKYD THERMOPLASTIC.
2. ALL SIGNAGE AND POSTS SHALL CONFORM TO FDOT INDEX 11860 AND PLAN DETAILS.
3. RPM'S SHALL BE POSITIONED ACCORDING TO FDOT INDEX 17352 AND PLAN DETAILS.
4. CONTRACTOR SHALL PROVIDE SHOP DRAWINGS FOR ALL D3-1 STREET NAME SIGNS.
5. ALL D3-1 SIGNS SHALL INCLUDE THE CITY OF FORT PIERCE LOGO.

NOTES:

1. ALL PAVEMENT MARKINGS ARE TO CONSIST OF 90 MIL ALKYD THERMOPLASTIC.
2. ALL SIGNAGE AND POSTS SHALL CONFORM TO FDOT INDEX 11860 AND PLAN DETAILS.
3. RPM'S SHALL BE POSITIONED ACCORDING TO FDOT INDEX 17352 AND PLAN DETAILS.
4. CONTRACTOR SHALL PROVIDE SHOP DRAWINGS FOR ALL D3-1 STREET NAME SIGNS.
5. ALL D3-1 SIGNS SHALL INCLUDE THE CITY OF FORT PIERCE LOGO.

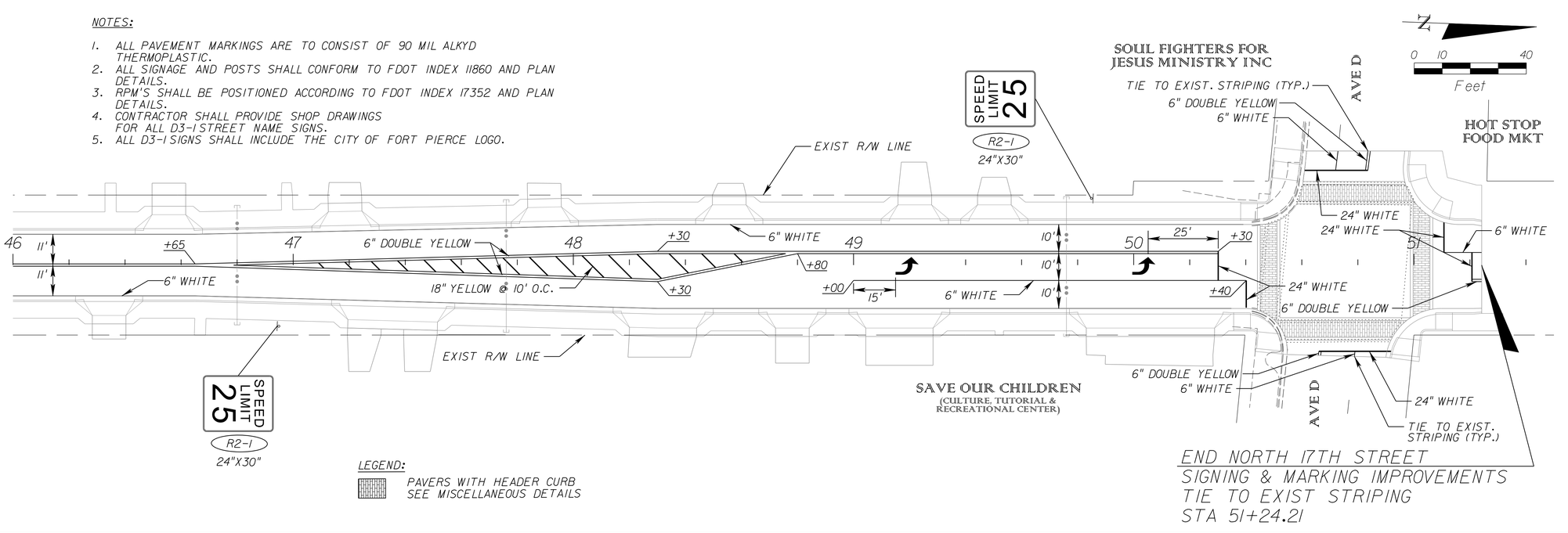

LEGEND:

PAVERS WITH HEADER CURB
SEE MISCELLANEOUS DETAILS

END NORTH 17TH STREET
SIGNING & MARKING IMPROVEMENTS
TIE TO EXIST STRIPING
STA 51+24.21

REVISIONS					
DATE	BY	DESCRIPTION	DATE	BY	DESCRIPTION

Kimley»Horn
BRIAN A. GOOD, P.E.
P.E. LICENSE NUMBER 56939
445 24TH STREET, SUITE 200
VERO BEACH, FL 32960
(772) 794-4100
CERTIFICATE OF AUTHORIZATION: 00000696

CITY OF FORT PIERCE/
FORT PIERCE REDEVELOPMENT AGENCY

NORTH 17TH STREET IMPROVEMENTS
ORANGE AVENUE TO AVENUE D

SIGNING AND MARKING

SHEET NO.
39

mike.forman 10/19/2016 8:48:39 AM K:\VRB_Roadway\47922003\cadd\Phase 1\rdwy\PLANSP02.dgn

GENERAL EROSION NOTES

A. THE STORMWATER POLLUTION PREVENTION PLAN IS COMPRISED OF THIS DRAWING, THE STANDARD DETAILS, THE PLAN NARRATIVE, ATTACHMENTS INCLUDED IN SPECIFICATIONS, PLUS THE PERMIT AND ALL SUBSEQUENT REPORTS AND RELATED DOCUMENTS.

B. ALL CONTRACTORS AND SUBCONTRACTORS INVOLVED WITH STORM WATER POLLUTION PREVENTION SHALL OBTAIN A COPY OF THE STORM WATER POLLUTION PREVENTION PLAN AND THE STATE OF FLORIDA NATIONAL POLLUTANT DISCHARGE ELIMINATION SYSTEM GENERAL PERMIT (NPDES PERMIT) AND BECOME FAMILIAR WITH THEIR CONTENTS.

C. CONTRACTOR SHALL IMPLEMENT BEST MANAGEMENT PRACTICES AS REQUIRED BY THE SWPPP. ADDITIONAL BEST MANAGEMENT PRACTICES SHALL BE IMPLEMENTED AS DICTATED BY CONDITIONS.

D. BEST MANAGEMENT PRACTICES (BMP'S) AND CONTROLS SHALL CONFORM TO FEDERAL, STATE, OR LOCAL REQUIREMENTS OR MANUAL OF PRACTICE, AS APPLICABLE CONTRACTOR SHALL IMPLEMENT ADDITIONAL CONTROLS AS DIRECTED BY PERMITTING AGENCY OR THE CITY.

E. CONTRACTOR SHALL MINIMIZE CLEARING TO THE MAXIMUM EXTENT PRACTICAL OR AS REQUIRED BY THE GENERAL PERMIT.

F. GENERAL CONTRACTOR SHALL DENOTE ON PLAN THE TEMPORARY STORAGE AREA WHICH SHALL ALSO BE USED AS THE EQUIPMENT MAINTENANCE AND CLEANING AREA, EMPLOYEE PARKING AREA, AND AREA FOR LOCATING PORTABLE FACILITIES, OFFICE TRAILERS, AND TOILET FACILITIES.

G. ALL WASH WATER (CONCRETE TRUCKS, VEHICLE CLEANING, EQUIPMENT CLEANING, ETC.) SHALL BE DETAINED AND PROPERLY TREATED OR DISPOSED.

H. SUFFICIENT OIL AND GREASE ABSORBING MATERIALS AND FLOTATION BOOMS SHALL BE MAINTAINED ON SITE OR READILY AVAILABLE TO CONTAIN AND CLEAN-UP FUEL OR CHEMICAL SPILLS AND LEAKS.

I. DUST ON THE SITE SHALL BE CONTROLLED. THE USE OF MOTOR OILS AND OTHER PETROLEUM BASED OR TOXIC LIQUIDS FOR DUST SUPPRESSION OPERATIONS IS PROHIBITED.

J. RUBBISH, TRASH, GARBAGE, LITTER, OR OTHER SUCH MATERIALS SHALL BE DEPOSITED INTO SEALED CONTAINERS. MATERIALS SHALL BE PREVENTED FROM LEAVING THE PREMISES THROUGH THE ACTION OF WIND OR STORMWATER DISCHARGE INTO DRAINAGE DITCHES OR WATERS OF THE STATE.

K. ALL STORM WATER POLLUTION PREVENTION MEASURES PRESENTED ON THIS PLAN, AND IN THE STORM WATER POLLUTION PREVENTION PLAN, SHALL BE INITIATED AS SOON AS PRACTICABLE.

L. STABILIZATION PRACTICES SHOULD BE INITIATED AS SOON AS PRACTICAL, BUT IN NO CASE MORE THAN 7 DAYS WHERE CONSTRUCTION HAS TEMPORARILY CEASED.

M. DISTURBED PORTIONS OF THE SITE WHERE CONSTRUCTION ACTIVITY HAS PERMANENTLY STOPPED SHALL BE PERMANENTLY SODDED. THESE AREAS SHALL BE SODDED NO LATER THAN 7 DAYS AFTER THE LAST CONSTRUCTION ACTIVITY OCCURRING IN THESE AREAS. REFER TO THE GRADING PLAN AND/OR LANDSCAPE PLAN.

N. IF THE ACTION OF VEHICLES TRAVELING OVER THE GRAVEL CONSTRUCTION ENTRANCES IS NOT SUFFICIENT TO REMOVE THE MAJORITY OF DIRT OR MUD, THEN THE TIRES MUST BE WASHED BEFORE THE VEHICLES ENTER A PUBLIC ROAD. IF WASHING IS USED, PROVISIONS MUST BE MADE TO INTERCEPT THE WASH WATER AND TRAP THE SEDIMENT BEFORE IT IS CARRIED OFF THE SITE.

O. ALL MATERIALS SPILLED, DROPPED, WASHED, OR TRACKED FROM VEHICLES ONTO ROADWAYS OR INTO STORM DRAINS MUST BE REMOVED IMMEDIATELY.

P. CONTRACTORS OR SUBCONTRACTORS WILL BE RESPONSIBLE FOR REMOVING SEDIMENT IN THE DETENTION POND AND ANY SEDIMENT THAT MAY HAVE COLLECTED IN THE STORM SEWER DRAINAGE SYSTEMS IN CONJUNCTION WITH THE STABILIZATION OF THE SITE.

Q. ON-SITE & OFFSITE SOIL STOCKPILE AND BORROW AREAS SHALL BE PROTECTED FROM EROSION AND SEDIMENTATION THROUGH IMPLEMENTATION OF BEST MANAGEMENT PRACTICES. STOCKPILE AND BORROW AREA LOCATIONS SHALL BE NOTED ON THE SITE MAP AND PERMITTED IN ACCORDANCE WITH GENERAL PERMIT REQUIREMENTS.

R. SLOPES SHALL BE LEFT IN A ROUGHENED CONDITION DURING THE GRADING PHASE TO REDUCE RUNOFF VELOCITIES AND EROSION.

S. DUE TO THE GRADE CHANGES DURING THE DEVELOPMENT OF THE PROJECT, THE CONTRACTOR SHALL BE RESPONSIBLE FOR ADJUSTING THE EROSION CONTROL MEASURES (SILT FENCES, ETC.) TO PREVENT EROSION.

T. THE CONTRACTOR IS RESPONSIBLE FOR APPLYING FOR AND OBTAINING THE NPDES PERMIT PRIOR TO THE COMMENCEMENT OF CONSTRUCTION.

MAINTENANCE

ALL MEASURES STATED ON THIS EROSION AND SEDIMENT CONTROL PLAN, AND IN THE STORM WATER POLLUTION PREVENTION PLAN, SHALL BE MAINTAINED IN FULLY FUNCTIONAL CONDITION UNTIL NO LONGER REQUIRED FOR A COMPLETED PHASE OF WORK OR FINAL STABILIZATION OF THE SITE. ALL EROSION AND SEDIMENTATION CONTROL MEASURES SHALL BE CHECKED BY A QUALIFIED PERSON AT LEAST ONCE EVERY SEVEN CALENDAR DAYS AND WITHIN 24 HOURS OF THE END OF A 0.5" RAINFALL EVENT, AND CLEANED AND REPAIRED IN ACCORDANCE WITH THE FOLLOWING:

1. INLET PROTECTION DEVICES AND BARRIERS SHALL BE REPAIRED OR REPLACED IF THEY SHOW SIGNS OF UNDERMINING, OR DETERIORATION.

2. ALL SODDED AREAS SHALL BE CHECKED REGULARLY TO SEE THAT A GOOD STAND IS MAINTAINED. AREAS SHOULD BE FERTILIZED, WATERED, AND RESODDED AS NEEDED.

3. SILT FENCES SHALL BE REPAIRED TO THEIR ORIGINAL CONDITIONS IF DAMAGED. SEDIMENT SHALL BE REMOVED FROM THE SILT FENCES WHEN IT REACHES ONE-HALF THE HEIGHT OF THE SILT FENCE.

4. THE CONSTRUCTION ENTRANCES SHALL BE MAINTAINED IN A CONDITION WHICH WILL PREVENT TRACKING OR FLOW OF MUD ONTO PUBLIC RIGHTS-OF-WAY. THIS MAY REQUIRE PERIODIC TOP DRESSING OF THE CONSTRUCTION ENTRANCES AS CONDITIONS DEMAND.

5. THE TEMPORARY STORAGE AREA SHALL BE KEPT IN GOOD CONDITION (SUITABLE FOR PARKING AND STORAGE).

6. OUTLET STRUCTURES IN THE SEDIMENTATION BASINS SHALL BE MAINTAINED IN OPERATIONAL CONDITIONS AT ALL TIMES. SEDIMENT SHALL BE REMOVED FROM SEDIMENT BASINS OR TRAPS WHEN THE DESIGN CAPACITY HAS BEEN REDUCED BY 50%.

7. ALL MAINTENANCE OPERATIONS SHALL BE DONE IN A TIMELY MANNER BUT IN NO CASE LATER THAN SEVEN CALENDAR DAYS FOLLOWING THE INSPECTION.

REVISIONS					
DATE	BY	DESCRIPTION	DATE	BY	DESCRIPTION

Kimley»Horn
BRIAN A. GOOD, P.E.
P.E. LICENSE NUMBER 56939
445 24TH STREET, SUITE 200
VERO BEACH, FL 32960
(772) 794-4100
CERTIFICATE OF AUTHORIZATION: 00000696

CITY OF FORT PIERCE/
FORT PIERCE REDEVELOPMENT AGENCY

NORTH 17TH STREET IMPROVEMENTS
ORANGE AVENUE TO AVENUE D

EROSION CONTROL
GENERAL NOTES

SHEET NO.
40

mike.forman 10/19/2016 8:48:39 AM K:\VRB_Roadway\47922003\cadd\Phase 1\rdwy\GENEC.dgn

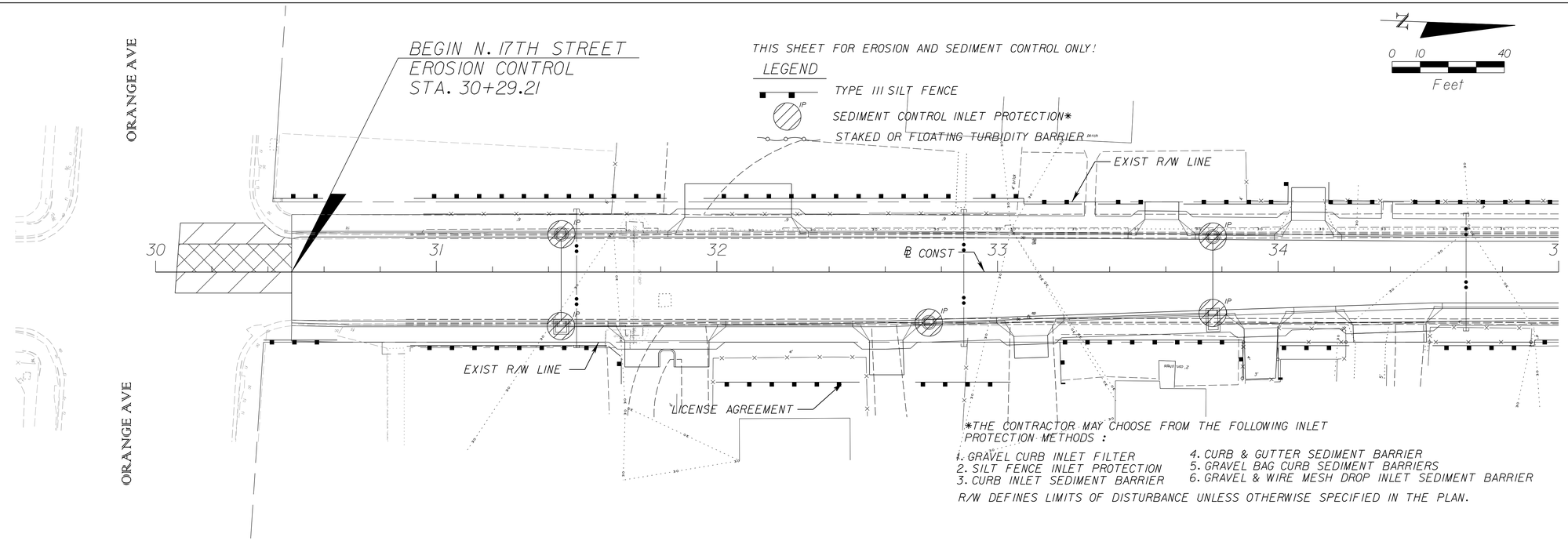

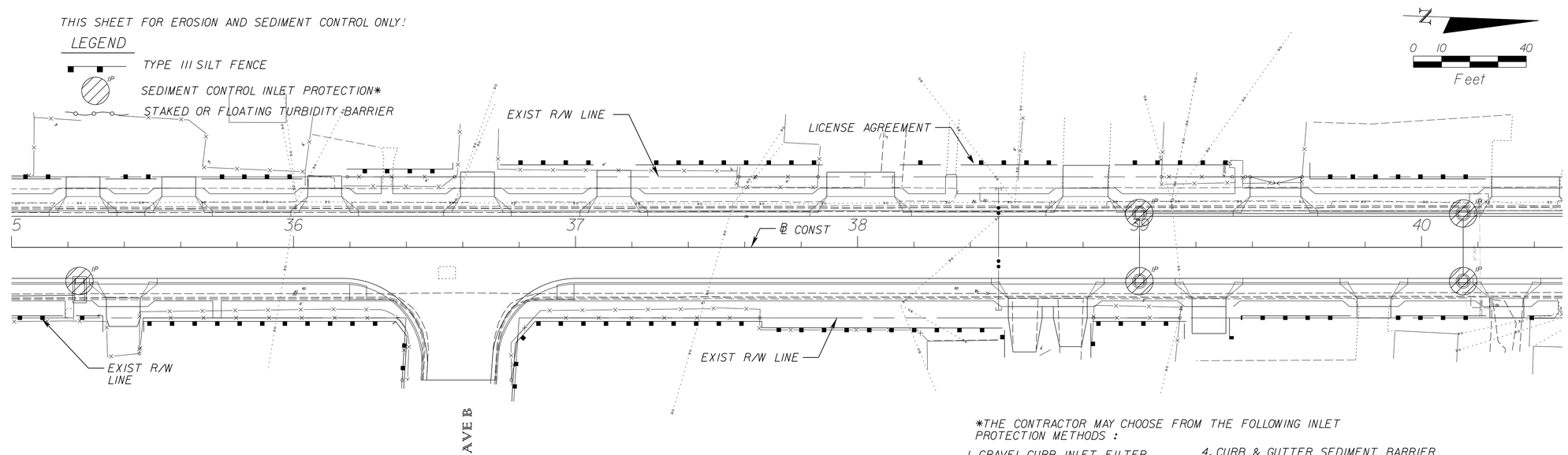

REVISIONS					
DATE	BY	DESCRIPTION	DATE	BY	DESCRIPTION

Kimley»Horn
BRIAN A. GOOD, P.E.
P.E. LICENSE NUMBER 56939
445 24TH STREET, SUITE 200
VERO BEACH, FL 32960
(772) 794-4100
CERTIFICATE OF AUTHORIZATION: 00000696

CITY OF FORT PIERCE/
FORT PIERCE REDEVELOPMENT AGENCY

NORTH 17TH STREET IMPROVEMENTS
ORANGE AVENUE TO AVENUE D

EROSION CONTROL

SHEET NO.
41

mike.forman 10/19/2016 8:48:41 AM K:\VRB_Roadway\47922003\cadd\Phase 1\rdwy\PLANEC01.dgn

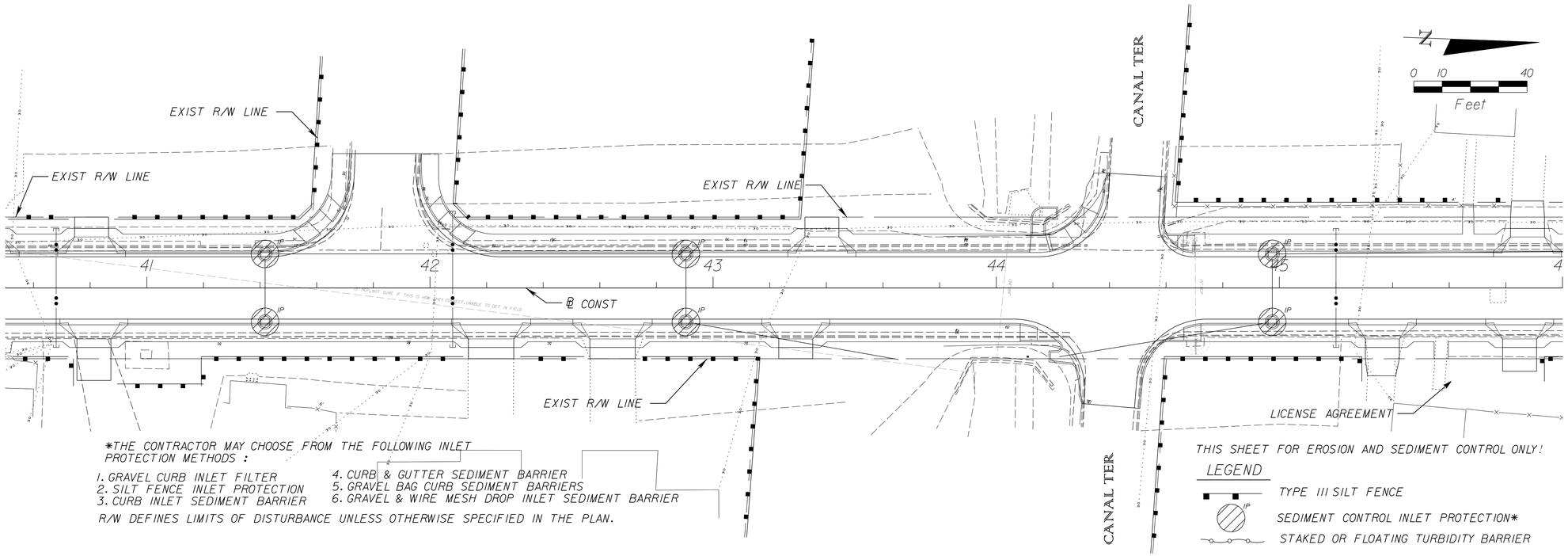

*THE CONTRACTOR MAY CHOOSE FROM THE FOLLOWING INLET PROTECTION METHODS :

1. GRAVEL CURB INLET FILTER
2. SILT FENCE INLET PROTECTION
3. CURB INLET SEDIMENT BARRIER
4. CURB & GUTTER SEDIMENT BARRIER
5. GRAVEL BAG CURB SEDIMENT BARRIERS
6. GRAVEL & WIRE MESH DROP INLET SEDIMENT BARRIER

R/W DEFINES LIMITS OF DISTURBANCE UNLESS OTHERWISE SPECIFIED IN THE PLAN.

REVISIONS					
DATE	BY	DESCRIPTION	DATE	BY	DESCRIPTION

Kimley»Horn
BRIAN A. GOOD, P.E.
P.E. LICENSE NUMBER 56939
445 24TH STREET, SUITE 200
VERO BEACH, FL 32960
(772) 794-4100
CERTIFICATE OF AUTHORIZATION: 00000696

CITY OF FORT PIERCE/
FORT PIERCE REDEVELOPMENT AGENCY

NORTH 17TH STREET IMPROVEMENTS
ORANGE AVENUE TO AVENUE D

EROSION CONTROL

SHEET NO.
42

mike.forman 10/19/2016 8:48:43 AM K:\VRB_Roadway\47922003\cadd\Phase I\rdwy\PLANEC02.dgn

THIS SHEET FOR EROSION AND SEDIMENT CONTROL ONLY!

LEGEND

TYPE III SILT FENCE

SEDIMENT CONTROL INLET PROTECTION*

STAKED OR FLOATING TURBIDITY BARRIER

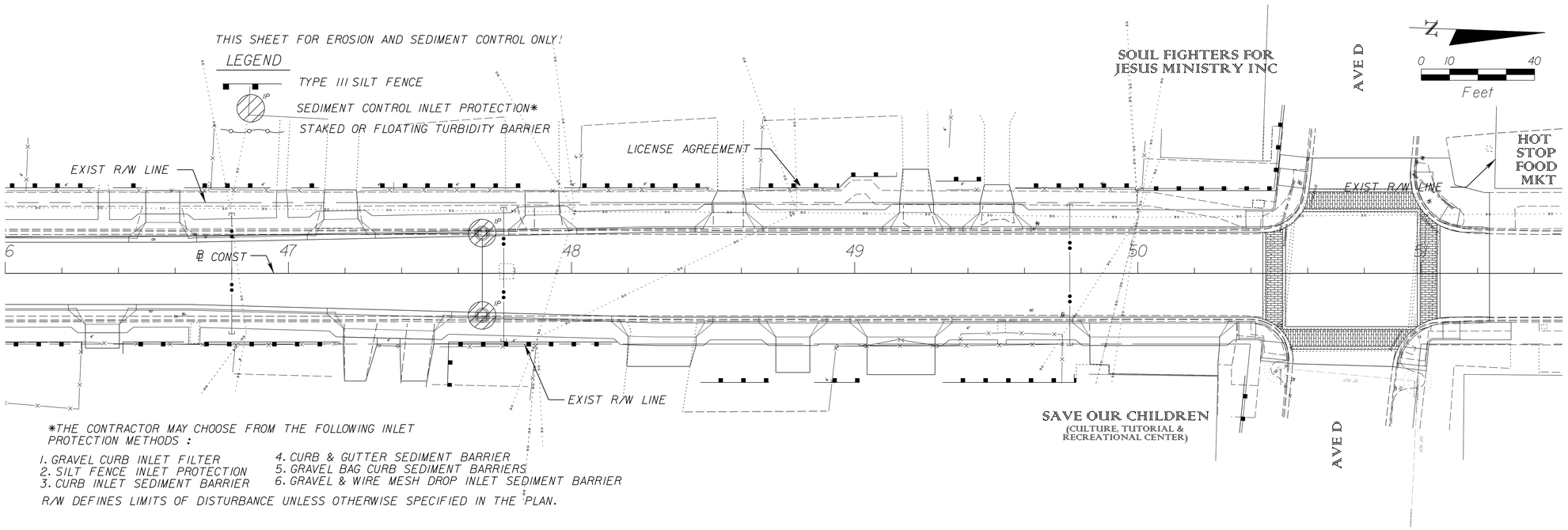

*THE CONTRACTOR MAY CHOOSE FROM THE FOLLOWING INLET PROTECTION METHODS :

1. GRAVEL CURB INLET FILTER
2. SILT FENCE INLET PROTECTION
3. CURB INLET SEDIMENT BARRIER
4. CURB & GUTTER SEDIMENT BARRIER
5. GRAVEL BAG CURB SEDIMENT BARRIERS
6. GRAVEL & WIRE MESH DROP INLET SEDIMENT BARRIER

R/W DEFINES LIMITS OF DISTURBANCE UNLESS OTHERWISE SPECIFIED IN THE PLAN.

REVISIONS					
DATE	BY	DESCRIPTION	DATE	BY	DESCRIPTION

Kimley»Horn

BRIAN A. GOOD, P.E.
P.E. LICENSE NUMBER 56939
445 24TH STREET, SUITE 200
VERO BEACH, FL 32960
(772) 794-4100
CERTIFICATE OF AUTHORIZATION: 00000696

CITY OF FORT PIERCE/
FORT PIERCE REDEVELOPMENT AGENCY

NORTH 17TH STREET IMPROVEMENTS
ORANGE AVENUE TO AVENUE D

EROSION CONTROL

SHEET NO.
43

mike.forman 10/19/2016 8:48:44 AM K:\VRB_Roadway\47922003\cadd\Phase 1\rdwy\PLANEC02A.dgn

MAINTENANCE OF TRAFFIC GENERAL NOTES:

1. THE FOLLOWING MAINTENANCE OF TRAFFIC DETAILS HAVE BEEN PROVIDED TO GIVE THE CONTRACTOR GENERAL DIRECTION. THE CONTRACTOR SHALL DEVELOP DETAILED TRAFFIC CONTROL PLANS THAT MUST BE APPROVED BY THE CITY PRIOR TO COMMENCEMENT OF CONSTRUCTION.
2. AT NO TIME SHALL THE CONTRACTOR CLOSE THE ROAD TO THROUGH TRAFFIC WITHOUT PRIOR CONSENT FROM THE CITY.
3. THE CONTRACTOR SHALL CONTACT IN WRITING ALL AFFECTED PROPERTY OWNERS 2 WEEKS PRIOR TO CONTRACTOR IMPLEMENTING ONE WAY TRAFFIC PATTERN.
4. CONTRACTOR SHALL MAINTAIN VARIABLE MESSAGE SIGN (VMS) ALERTING COMMUTERS TO ONE WAY TRAFFIC PATTERN. VMS SHALL BE ACTIVE NO LESS THAN 1 WEEK PRIOR TO TRAFFIC PATTERN MODIFICATION.
5. CONTRACTOR MUST MAINTAIN ACCESS TO ALL BUSINESS AND RESIDENCES AT ALL TIME.
6. MOT MUST BE IN COMPLIANCE WITH FDOT INDEX 600 SERIES.
7. PEDESTRIAN WALK WAY MUST FOLLOW FDOT INDEX 660 PEDESTRIAN CONTROL FOR CLOSURE OF SIDEWALKS.
8. AT THE END OF EVERYDAY, THE FDOT INDEX 600 SHOULDER TREATMENT MUST BE FOLLOWED.
9. CONTRACTOR SHALL GIVE CONSIDERATION TO PHASE CONSTRUCTION BASED ON PROPOSED FT. PIERCE UTILITY AUTHORITY UTILITY IMPROVEMENTS.

PHASE I DESCRIPTION

- MOT MUST BE IN COMPLIANCE WITH FDOT INDEX 600 SERIES.
- ERECT ALL ADVANCE CONSTRUCTION IDENTIFICATION SIGNS AND SET UP DETOUR.
- TRAFFIC TO REMAIN OPEN ON EXISTING ROADWAY IN A ONE WAY DIRECTION. PLACE TEMPORARY STRIPING AND PAVEMENT PER PHASE I CONSTRUCTION DETAIL (THIS SHEET).
- ALL EXISTING STRIPING THAT CONFLICTS WITH PROPOSED TEMPORARY STRIPING SHALL BE OBLITERATED.
- CONSTRUCT CROSS DRAINS AND SIDE DRAINS. MAINTAIN PROPER DRAINAGE DURING CONSTRUCTION BY USING TEMPORARY PIPING, PUMPING OR OTHER METHODS APPROVED BY CEI.
- PEDESTRIAN WALK WAY MUST FOLLOW FDOT INDEX 660 PEDESTRIAN CONTROL FOR CLOSURE OF SIDEWALKS.
- CONSTRUCT WIDENING, CURB AND GUTTER, DRIVEWAYS AND TURNOUTS. DO NOT PLACE LAST LIFT OF ASPHALT.
- AT THE END OF EVERYDAY, THE FDOT INDEX 600 SHOULDER TREATMENT MUST BE FOLLOWED.

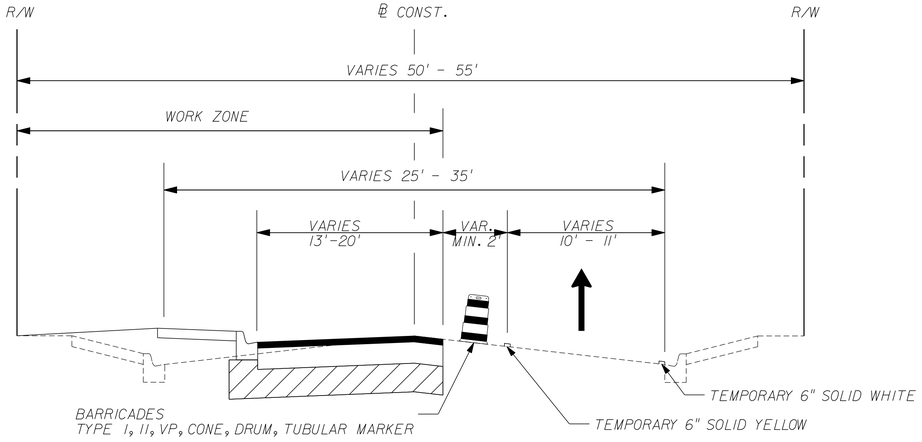

PHASE I CONSTRUCTION DETAIL
N.T.S.

REVISIONS					
DATE	BY	DESCRIPTION	DATE	BY	DESCRIPTION

Kimley»Horn
BRIAN A. GOOD, P.E.
P.E. LICENSE NUMBER 56939
445 24TH STREET, SUITE 200
VERO BEACH, FL 32960
(772) 794-4100
CERTIFICATE OF AUTHORIZATION: 00000696

CITY OF FORT PIERCE/
FORT PIERCE REDEVELOPMENT AGENCY

NORTH 17TH STREET IMPROVEMENTS
ORANGE AVENUE TO AVENUE D

TRAFFIC CONTROL
TYPICAL SECTION

SHEET NO.
44

mike.forman 10/19/2016 8:48:45 AM K:\VRB_Roadway\47922003\cadd\Phase 1\rdwy\TCTYRD01.dgn

PHASE II DESCRIPTION

- MOT MUST BE IN COMPLIANCE WITH FDOT INDEX 600 SERIES.
- ERECT ALL ADVANCE CONSTRUCTION IDENTIFICATION SIGNS AND SET UP DETOUR AS REQUIRED OR MODIFIED FROM PHASE I.
- TRAFFIC TO REMAIN OPEN ON EXISTING ROADWAY IN A ONE WAY DIRECTION. PLACE TEMPORARY STRIPING AND PAVEMENT PER PHASE I CONSTRUCTION DETAIL (THIS SHEET).
- ALL EXISTING STRIPING THAT CONFLICTS WITH PROPOSED TEMPORARY STRIPING SHALL BE OBLITERATED.
- CONSTRUCT CROSS DRAINS AND SIDE DRAINS. MAINTAIN PROPER DRAINAGE DURING CONSTRUCTION BY USING TEMPORARY PIPING, PUMPING OR OTHER METHODS APPROVED BY CEI.
- PEDESTRIAN WALK WAY MUST FOLLOW FDOT INDEX 660 PEDESTRIAN CONTROL FOR CLOSURE OF SIDEWALKS.
- CONSTRUCT WIDENING, CURB AND GUTTER, DRIVEWAYS AND TURNOUTS. DO NOT PLACE LAST LIFT OF ASPHALT.
- AT THE END OF EVERYDAY, THE FDOT INDEX 600 SHOULDER TREATMENT MUST BE FOLLOWED.

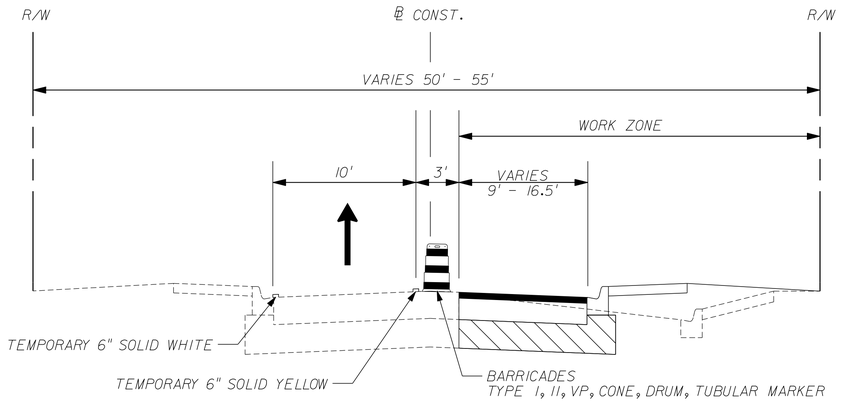

PHASE II CONSTRUCTION DETAIL
N.T.S.

PHASE III DESCRIPTION

- PLACE FINAL LIFT OF ASPHALT PER TYPICAL SECTION
- PLACE TEMPORARY STRIPING PER FINAL STRIPING PLAN. ALL EXISTING STRIPING THAT CONFLICTS WITH PROPOSED TEMPORARY STRIPING SHALL BE OBLITERATED.
- AT THE END OF THE ASPHALT CURE PERIOD, PLACE PERMANENT PAVEMENT MARKINGS PER THE FINAL STRIPING PLAN.
- COMPLETE FINAL SIGNING AND PAVEMENT MARKINGS, AND OPEN TRAFFIC LANES.

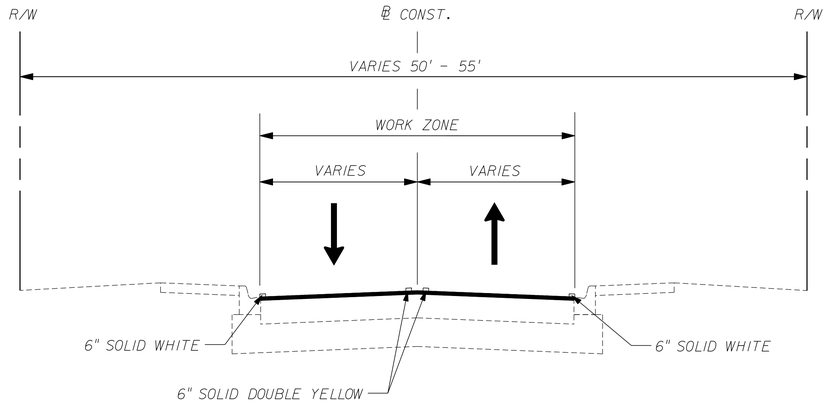

PHASE III CONSTRUCTION DETAIL
N.T.S.

REVISIONS					
DATE	BY	DESCRIPTION	DATE	BY	DESCRIPTION

Kimley»Horn
BRIAN A. GOOD, P.E.
P.E. LICENSE NUMBER 56939
445 24TH STREET, SUITE 200
VERO BEACH, FL 32960
(772) 794-4100
CERTIFICATE OF AUTHORIZATION: 00000696

CITY OF FORT PIERCE/
FORT PIERCE REDEVELOPMENT AGENCY

NORTH 17TH STREET IMPROVEMENTS
ORANGE AVENUE TO AVENUE D

TRAFFIC CONTROL
TYPICAL SECTION

SHEET NO.
45

mike.forman 10/19/2016 8:48:46 AM K:\VRB_Roadway\47922003\cadd\Phase 1\rdwy\TCTYRD02.dgn

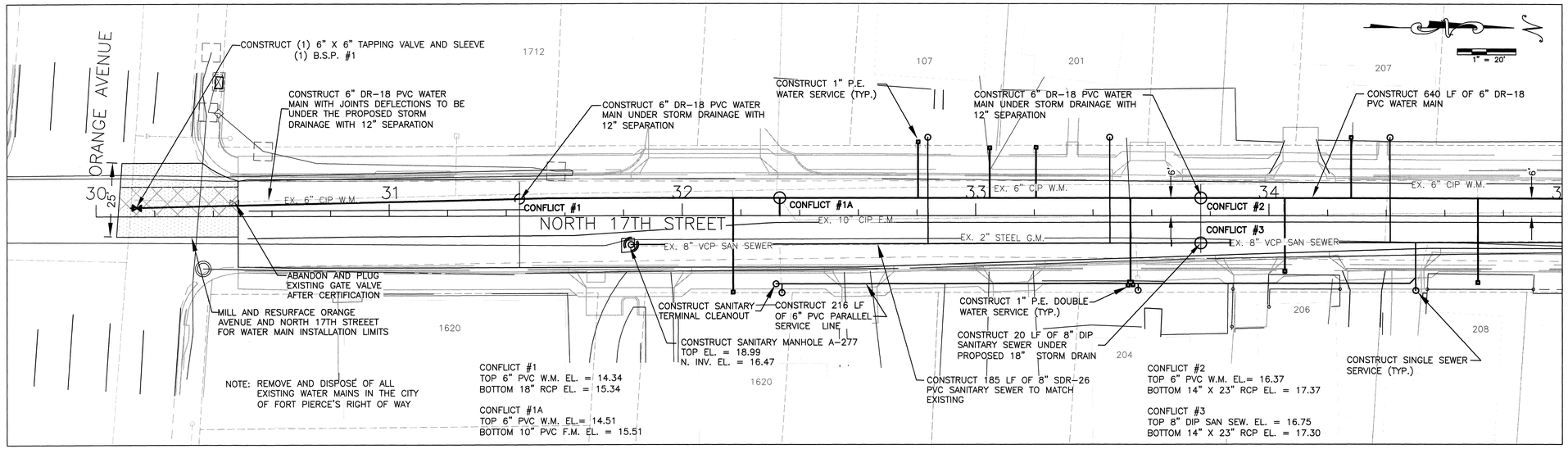

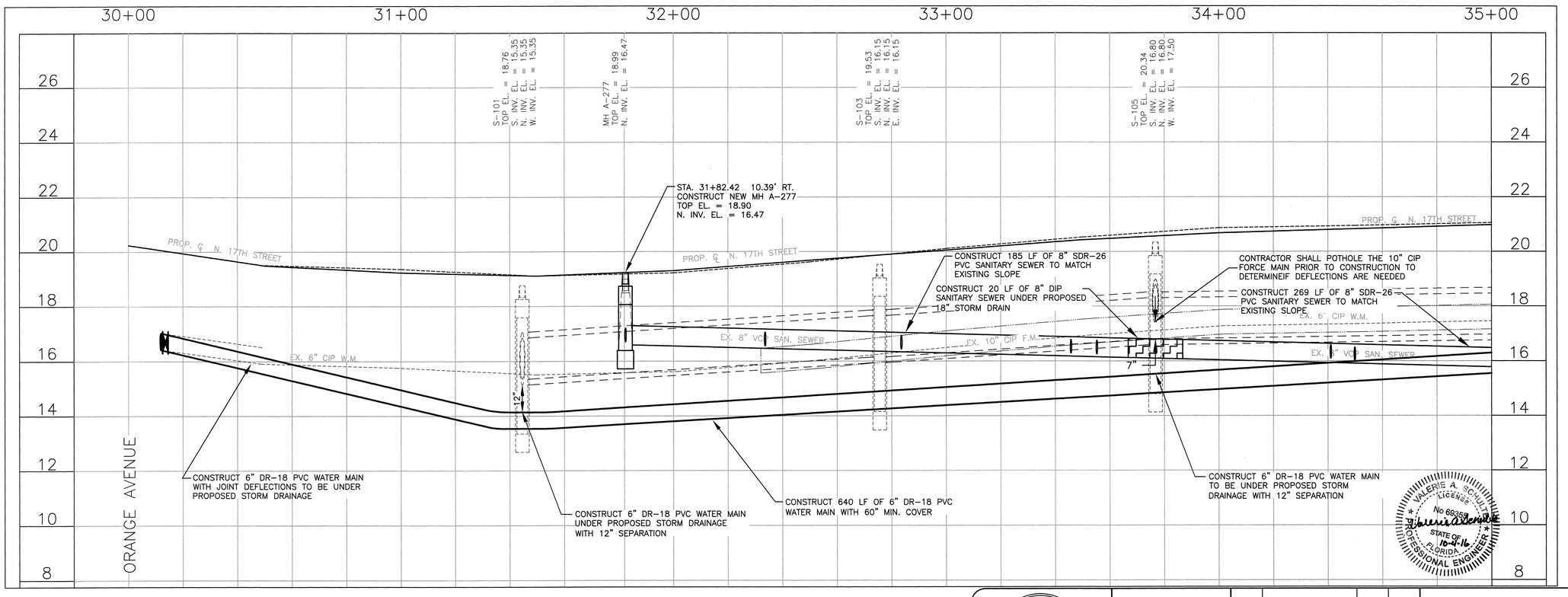

Valerie A. Schulte, P.E. PE# 69355
1701 S. 37th Street
Fort Pierce, FL 34947

VALERIE A. SCHULTE LICENSE No 69355 STATE OF FLORIDA PROFESSIONAL ENGINEER
10-4-16

FORT PIERCE UTILITIES AUTHORITY

VERIFY SCALE
BAR IS EQUAL TO ONE INCH ON ORIGINAL DRAWING
0 1
ADJUST ALL SCALED DIMENSIONS ACCORDINGLY

DATE:	REVISION:	BY:	APPD:

DESIGNED: VAS	DRAWING FILENAME
DRAWN BY: SLL	SCALE: 20'
APPROVED: VAS	DATE:

NORTH 17TH STREET
UTILITY REPLACEMENT
WATER/WASTEWATER ENGINEERING

FT. PIERCE UTILITIES AUTHORITY
1701 SOUTH 37TH STREET
FT. PIERCE, FLORIDA 34947
(772) 466-1600 / FAX (772) 468-2414

SHEET TYPE	SHEET #
PLAN / PROFILE	46

MATCHLINE STA 35+00 SEE SHEET 2 OF 8

MATCHLINE STA 41+50 SEE SHEET 4 OF 8

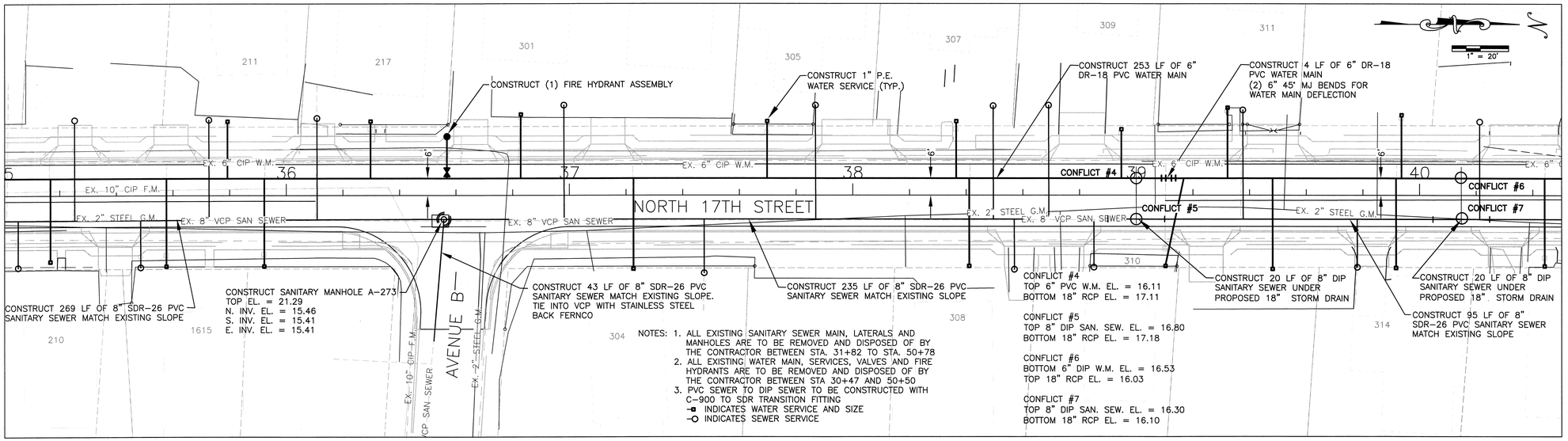

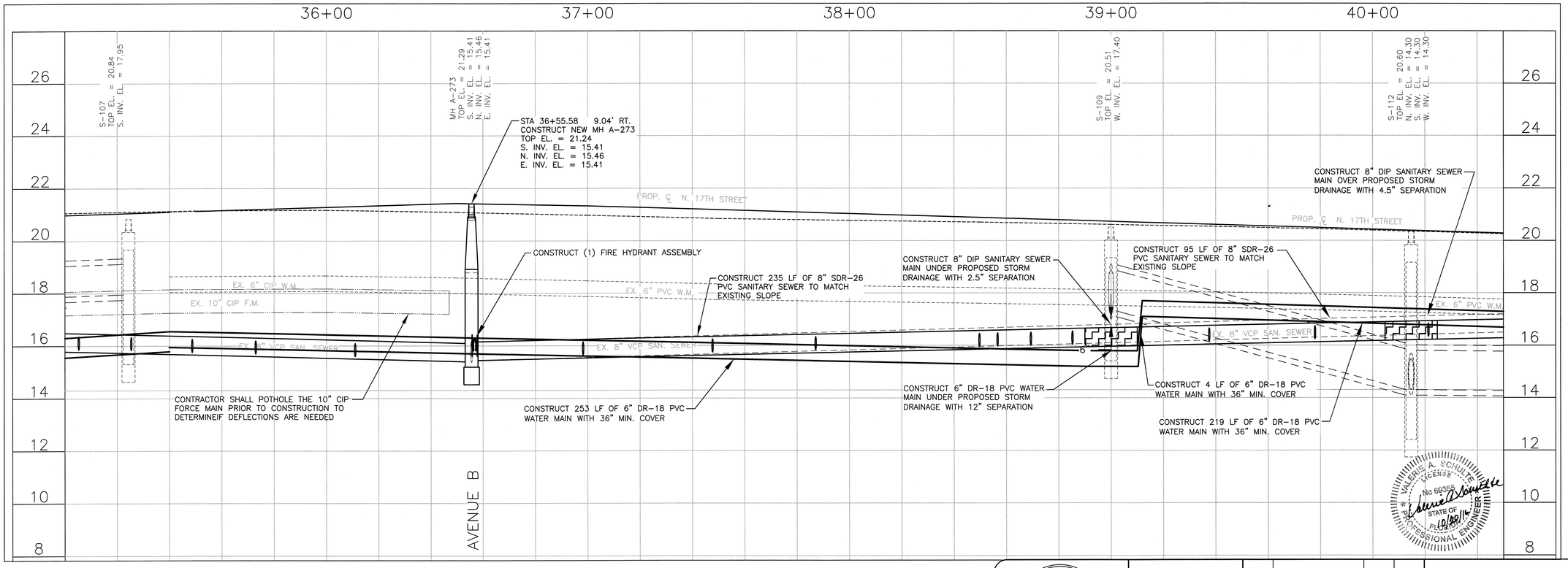

Valerie A. Schultte, P.E. PE# 69355
1701 S. 37th Street
Fort Pierce, FL 34947

VALERIE A. SCHULTE LICENSE No 69355 STATE OF FLORIDA PROFESSIONAL ENGINEER
10/20/17

FORT PIERCE UTILITIES AUTHORITY

VERIFY SCALE
BAR IS EQUAL TO ONE INCH ON ORIGINAL DRAWING
0 1
ADJUST ALL SCALED DIMENSIONS ACCORDINGLY

DATE:	REVISION:	BY:	APPD:

NORTH 17TH STREET
UTILITY REPLACEMENT

WATER/WASTEWATER ENGINEERING

DESIGNED: VAS	DRAWING FILENAME:
DRAWN BY: SLL	SCALE: 20'
APPROVED: VAS	DATE:

FT. PIERCE UTILITIES AUTHORITY
1701 SOUTH 37TH STREET
FT. PIERCE, FLORIDA 34947
(772) 466-1600 / FAX (772) 468-2414

SHEET TYPE: PLAN / PROFILE
SHEET #: 47

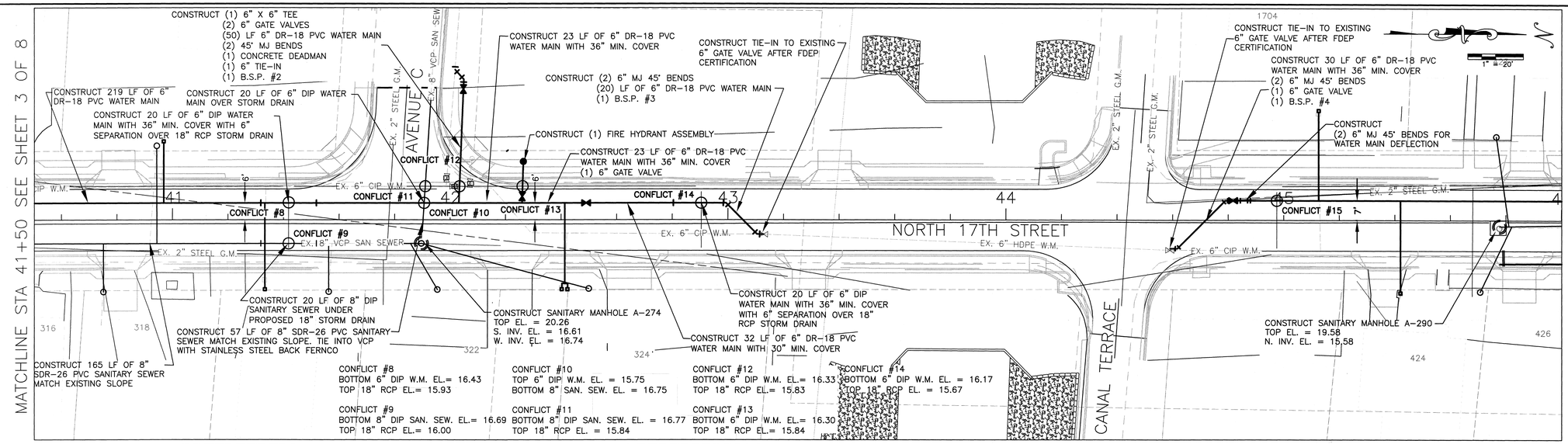

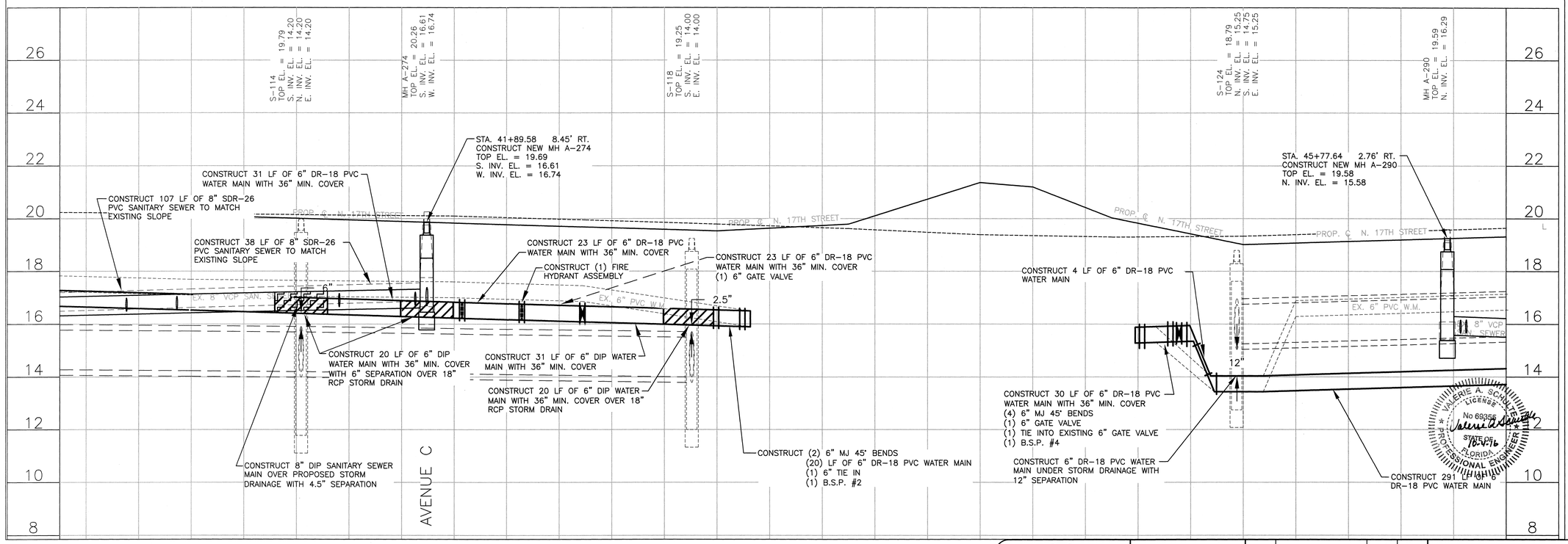

VALERIE A. SCHULTE LICENSE No 69355 STATE OF FLORIDA PROFESSIONAL ENGINEER

Valerie A. Schulte, P.E. PE# 69355
1701 S. 37th Street
Fort Pierce, FL 34947

FORT PIERCE UTILITIES AUTHORITY

VERIFY SCALE
BAR IS EQUAL TO ONE INCH ON ORIGINAL DRAWING
0 1
ADJUST ALL SCALED DIMENSIONS ACCORDINGLY

DATE:	REVISION:	BY:	APPD:

DESIGNED: VAS
DRAWN BY: SLL
APPROVED: VAS
DRAWING FILENAME
SCALE: 20'
DATE:

NORTH 17TH STREET
UTILITY REPLACEMENT

WATER/WASTEWATER ENGINEERING

FT. PIERCE UTILITIES AUTHORITY
1701 SOUTH 37TH STREET
FT. PIERCE, FLORIDA 34947
(772) 466-1600 / FAX (772) 468-2414

SHEET TYPE: PLAN / PROFILE
SHEET #: 48

MATCHLINE STA 46+00 SEE SHEET 4 OF 8

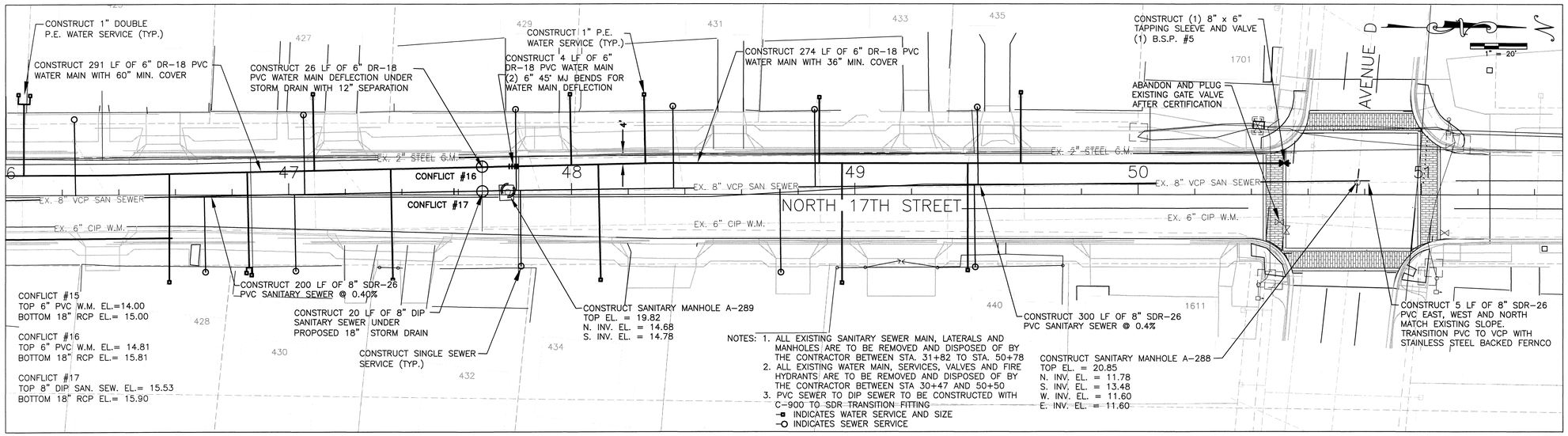

CONFLICT #15
TOP 6" PVC W.M. EL.=14.00
BOTTOM 18" RCP EL.= 15.00

CONFLICT #16
TOP 6" PVC W.M. EL.= 14.81
BOTTOM 18" RCP EL.= 15.81

CONFLICT #17
TOP 8" DIP SAN. SEW. EL.= 15.53
BOTTOM 18" RCP EL.= 15.90

NOTES:
1. ALL EXISTING SANITARY SEWER MAIN, LATERALS AND MANHOLES ARE TO BE REMOVED AND DISPOSED OF BY THE CONTRACTOR BETWEEN STA. 31+82 TO STA. 50+78
2. ALL EXISTING WATER MAIN, SERVICES, VALVES AND FIRE HYDRANTS ARE TO BE REMOVED AND DISPOSED OF BY THE CONTRACTOR BETWEEN STA 30+47 AND 50+50
3. PVC SEWER TO DIP SEWER TO BE CONSTRUCTED WITH C-900 TO SDR TRANSITION FITTING
-■ INDICATES WATER SERVICE AND SIZE
-○ INDICATES SEWER SERVICE

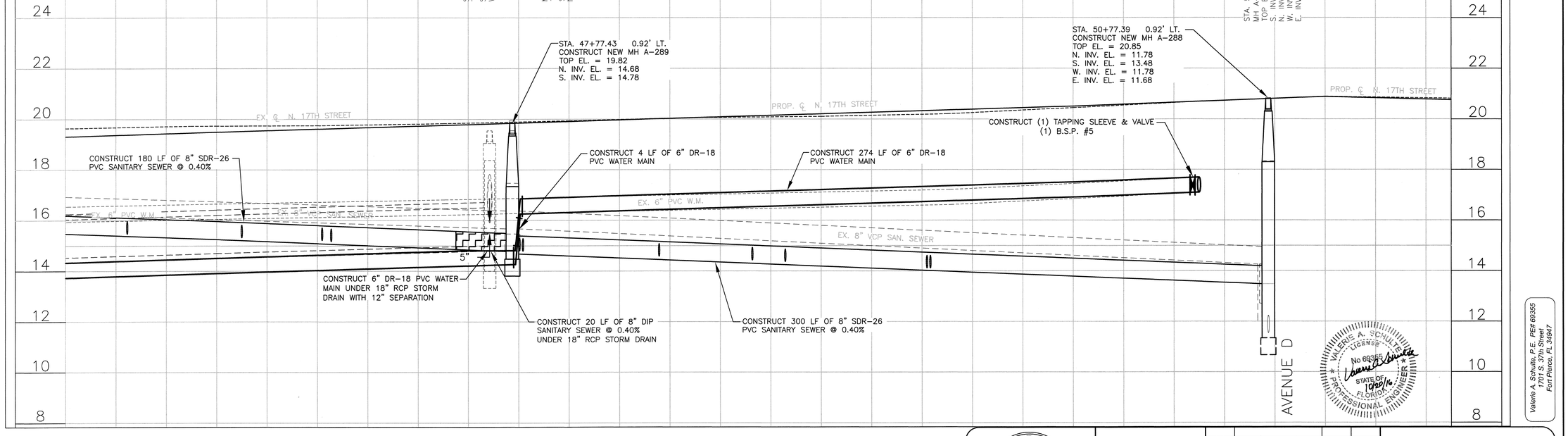

VALERIE A. SCHULTE LICENSE No 69355 STATE OF FLORIDA PROFESSIONAL ENGINEER 10/20/16

Valerie A. Schulte, P.E. PE# 69355
1701 S. 37th Street
Fort Pierce, FL 34947

FORT PIERCE UTILITIES AUTHORITY

VERIFY SCALE
BAR IS EQUAL TO ONE INCH ON ORIGINAL DRAWING
0 ■ 1
ADJUST ALL SCALED DIMENSIONS ACCORDINGLY

DATE:	REVISION:	BY:	APP'D:
10/14/2016	Removed 12" WM Calout	SLL	VAS

DESIGNED: VAS	DRAWING FILENAME
DRAWN BY: SLL	SCALE: 20'
APPROVED: VAS	DATE:

NORTH 17TH STREET
UTILITY REPLACEMENT
WATER/WASTEWATER ENGINEERING

FT. PIERCE UTILITIES AUTHORITY
1701 SOUTH 37TH STREET
FT. PIERCE, FLORIDA 34947
(772) 466-1600 / FAX (772) 468-2414

SHEET TYPE: PLAN / PROFILE
SHEET #: 49

FORT PIERCE UTILITIES AUTHORITY
WATER DISTRIBUTION NOTES

1. ALL CONSTRUCTION MATERIAL, INSTALLATION AND TESTING SHALL CONFORM TO THE STANDARD SPECIFICATIONS OF THE FORT PIERCE UTILITIES AUTHORITY.
2. WATER MAINS WHERE SPECIFIED AS POLYVINYL CHLORIDE (PVC) SHALL CONFORM TO AWWA C-900 OR C-905, PRESSURE CLASS 150, OR (18). WATER MAINS WHERE SPECIFIED AS POLYETHYLENE (PE) SHALL CONFORM TO AWWA C-901 OR C-906, STANDARD CODE DESIGNATION PE3408, PIPE CLASS 200, DIMENSION RATIO (DR) 17 FOR DIRECT BURY, (DR) 11 FOR DIRECTIONAL BORING, AND (DR) 9 FOR 2 INCH AND SMALLER PIPELINES.
3. WATER MAIN, WHERE SPECIFIED AS DUCTILE IRON PIPE , SHALL CONFORM TO ANSI/AWWA C151/A21.51 AND SHALL BE PRESSURE CLASS 250 (MINIMUM).
4. POLYVINYL CHLORIDE WATER MAIN SHALL BE BLUE IN COLOR OR WHITE IN COLOR WITH BLUE STRIPES. THE USE OF IDENTIFICATION TAPE ATTACHED TO THE TOP OF THE PIPE MAY BE USED IN LIEU OF MARKING ON THE PIPE, ALSO DIP PIPE SHALL REQUIRE THE USE OF IDENTIFICATION TAPE AND THHN WIRE.
5. FITTINGS SHALL BE DUCTILE IRON CONFORMING TO ANSI/AWWA C-110/A21.10, CLASS 250 MIN., CEMENT LINED AND FACTORY COATED
6. GATE VALVES SHALL BE MUELLER RESILIENT SEAT, KENNDY KEN-SEAL, AMERICAN OR APPROVED EQUAL. VALVES SHALL CONFORM TO AWWA C-509.
7. WATER LINES SHALL BE BACKFILLED AND COMPACTED IN ACCORDANCE WITH FPUA DESIGN AND CONSTRUCTION STANDARDS. THE CONTRACTOR SHALL SUBMIT CERTIFIED DENSITY TESTS AS REQUIRED BY FPUA ENGINEERING AND THE CITY, COUNTY, FDOT. IN CASES WHERE PAVED AREAS FALL WITHIN THE JURISDICTION OF LOCAL OR STATE AGENCIES, THE COMPACTION REQUIREMENTS SHALL NOT BE LESS THAN THE MINIMUM REQUIRED BY THE APPROPRIATE RESPONSIBLE AGENCY.
8. NO FIELD CHANGES OR DEVIATIONS FROM THE DESIGN SHALL BE MADE WITHOUT PRIOR APPROVAL OF THE FPUA ENGINEER AND CITY/COUNTY/FDOT ENGINEER.
9. THE CONTRACTOR SHALL NOTIFY FPUA ENGINEERING AND CITY/COUNTY/FDOT ENGINEERING 48 HOURS PRIOR TO COMMENCING CONSTRUCTION.
10. A PRE-CONSTRUCTION CONFERENCE BETWEEN THE ENGINEER, THE CONTRACTOR, FPUA, AND CITY/COUNTY/FDOT ENGINEER SHALL BE MANDATORY PRIOR TO COMMENCEMENT OF CONSTRUCTION.
11. TRAFFIC CONTROL, BARRICADES, ETC., SHALL BE IN ACCORDANCE WITH THE FLORIDA DEPARTMENT OF OF TRANSPORTATION STANDARDS AND APPROVED BY THE CITY ENGINEER.
12. MINIMUM COVER SHALL BE 36 INCHES EXCEPT AS APPROVED BY THE UTILITIES ENGINEER AND CITY/COUNTY/FDOT ENGINEER. PIPES WITH COVER LESS THAN 30 INCHES SHALL BE CONSTRUCTED OF DUCTILE IRON OR IN PVC CASING.
13. DISTURBED AREAS SHALL BE RESTORED IN CONFORMANCE WITH THE APPLICABLE GOVERNING AGENCY REQUIREMENTS.
14. EXISTING UTILITIES AND DRAINAGE SHALL BE FIELD VERIFIED PRIOR TO CONSTRUCTION AND PROTECTED BY THE CONTRACTOR.
15. WATER MAINS SHALL BE TESTED AND DISINFECTED IN ACCORDANCE WITH THE APPLICABLE FLORIDA DEPARTMENT OF ENVIRONMENTAL PROTECTION AND AWWA C-651 FOR DISINFECTION.

FORT PIERCE UTILITIES AUTHORITY
WATER DISTRIBUTION NOTES
CONTINUED

16. THE CONTRACTOR SHALL BE RESPONSIBLE FOR MAINTAINING EXISTING UTILITIES AND DRAINAGE.
17. THE CONTRACTOR SHALL FURNISH RECORD DRAWING INFORMATION TO THE ENGINEER INCLUDING LOCATIONS OF VALVES, FITTINGS, SERVICE CONNECTIONS, BLOWOFFS, AIR RELEASE VALVES, AND ANY OTHER PERTINENT INFORMATION NECESSARY TO LOCATE ITEMS CONSTRUCTED UNDER THIS PROJECT, AS REQUIRED BY THE UTILITIES ENGINEER.
18. THE CONTRACTOR SHALL TAP EXISTING LINES UNDER THE SUPERVISION OF THE FORT PIERCE UTILITIES AUTHORITY ONLY AFTER TESTING AND DISINFECTION HAS BEEN COMPLETED AND APPROVED ON THE TAPPING VALVE AND SLEEVE.
19. WATER MAIN SHALL BE MARKED BY THE USE OF CONTINUOUS 10 GAUGE THHN MULTI STRANDED WIRE (BLUE IN COLOR) AND IDENTIFICATION TAPE WITH "WATER" MARKED ON TAPE, PERMANENTLY ATTACHED TO THE TOP OF THE WATER MAIN IN ACCORDANCE WITH THE FORT PIERCE UTILITES AUTHORITY SPECIFICATIONS.
20. SERVICE TAPS SHALL BE PLACED APPROXIMATELY TEN FEET AWAY FROM GATE VALVES, AS SHOWN, FOR TESTING. FOLLOWING TESTING AND STERILIZATION OF WATER LINE, CONTRACTOR SHALL PLACE A BRASS PLUG IN CORPORATION STOPS AND CURB STOPS SHALL BE REMOVED FROM TESTING LOCATIONS.
21. MECHANICAL RESTRAINTS TO BE USED ON ALL FITTINGS AND PLACED IN ACCORDANCE WITH MANUFACTURER'S OR ENGINEER'S RECOMMENDATIONS (WHICHEVER IS MORE STRINGENT) AND FPUA REQUIREMENTS.
22. ALL MAINS SHALL BE TESTED AT A MINIMUM OF 150 PSI. TESTING METHODS SHALL CONFORM TO AWWA C-600. – 2 HR MINIMUM TEST

$$L = \frac{SD(P)^{1/2}}{148{,}000}$$

L= LEAKAGE IN GPH
S= LENGTH OF PIPE IN FEET
D= PIPE DIAMETER IN INCHES
P= TESTING PRESSURE IN PSI

23. PRIOR TO ANY TESTING, ALL MAINS 6" IN DIA. AND LARGER SHALL HAVE A SWAB PASSED THRU THE ENTIRE LENGTH OF THE LINE. NOTE: SWAB SHOULD BE PLACED IN 1st. JOINT OF NEW LINE. END OF MAIN SHOULD BE "TURNED UP" AT 45& AND EXTENDED SO THAT SWABBING AND A FULL BORE FLUSH CAN BE ACCOMPLISHED. BLOW-OFF ASSY CAN THEN BE PLACED. WHERE LINES BRANCH, SWABS WILL BE PLACED IN BRANCH LINES AND SEQUENTIALLY SWABBED AND FLUSHED.
24. A MINIMUM SIX FEET AND PREFERABLY TEN FEET HORIZONTAL SEPARATION SHALL BE MAINTAINED BETWEEN THE WATER MAIN AND ANY WASTEWATER LINES. 6 INCHES MINIMUM VERTICAL SEPARATION IF WATER MAIN IS OVER WASTEWATER AND 12 INCHES IF WATER MAIN IS UNDER SHALL BE MAINTAINED BETWEEN THE WATER MAIN AND ANY WASTWATER LINES. THE DISTANCE SHALL BE MEASURED FROM OUTSIDE OF PIPE TO OUTSIDE OF PIPE OR STRUCTURE. WHERE THIS MINIMUM SEPARATION CANNOT BE MAINTAINED, THE CROSSING SHALL BE ARRANGED SO THAT THE WASTEWATER PIPE JOINTS AND THE WATER MAIN PIPE JOINTS ARE EQUIDISTANT FROM THE POINT OF CROSSING, AND THE WATER MAIN SHALL BE CONSTRUCTED OF DUCTILE IRON PIPE (DIP) AT THE CROSSING. SUFFICIENT LENGHTS OF DIP MUST BE USED TO PROVIDE A MINIMUM SEPARATION OF 10 FEET BETWEEN ANY TWO JOINTS. ALL JOINTS ON THE WATER MAIN WITHIN 20 FEET OF THE CROSSING MUST BE MECHANICALLY RESTRAINED. A MINIMUM VERTICAL CLEARANCE OF 6 INCHES MUST BE MAINTAINED AT ALL CROSSINGS.
25. WHERE A WATER MAIN IS TO BE INSTALLED BELOW A STORM DRAIN PIPE, A MINIMUM OF 6 INCHES OF VERTICAL CLEARANCE BETWEEN PIPES SHALL BE CONSTRUCTED OF DIP AT THE CROSSING, AND SHALL BE MECHANICALLY RESTRAINED WITHIN 20 FEET OF THE CROSSING.
26. CONTRACTOR SHALL COMPLY WITH FLORIDA TRENCH SAFETY ACT REQUIREMENTS.

FORT PIERCE UTILITIES AUTHORITY WASTEWATER CONSTRUCTION NOTES

1. ALL CONSTRUCTION MATERIAL, INSTALLATION AND TESTING SHALL CONFORM TO THE STANDARD SPECIFICATIONS OF THE FORT PIERCE UTILITIES AUTHORITY.
2. GRAVITY SEWER MAIN SHALL BE POLYVINYL CHLORIDE SDR-26, GREEN OR WHITE IN COLOR, GRAVITY SEWER MAIN SHALL HAVE LOCATOR TAPE WITH "SEWER" MARKED ON TAPE AND SHALL CONFORM TO ASTM D-3034.
3. THE MANHOLE BASE SHALL BE SET ON A FIRM, DRY AND STABLE OR COMPACTED BASE FOUNDATION. IF NECESSARY, THE CONTRACTOR SHALL UTILIZE ROCK TO PROVIDE A FIRM AND SUITABLE MANHOLE BASE FOUNDATION.
4. WASTEWATER LINES SHALL BE BACKFILLED AND COMPACTED IN ACCORDANCE WITH FPUA DESIGN AND CONSTRUCTION STANDARDS. THE CONTRACTOR SHALL SUBMIT CERTIFIED DENSITY TESTS AS REQUIRED BY FPUA ENGINEERING AND THE CITY ENGINEERING DEPARTMENT. IN CASES WHERE PAVED AREAS FALL WITHIN THE JURISDICTION OF LOCAL OR STATE AGENCIES, THE COMPACTION REQUIREMENTS SHALL NOT BE LESS THEN THE MINIMUM REQUIRED BY THE APPROPRIATE RESPONSIBLE AGENCY.
5. A 1% MINIMUM SLOPE SHALL BE MAINTAINED ON ALL SANITARY SERVICE LATERALS.
6. THE CONTRACTOR SHALL FURNISH RECORD DRAWING INFORMATION TO THE ENGINEER CONSISTING OF PIPE SIZES, LOCATION OF SERVICE TEE WYES, DIAMETER OF SERVICES, LOCATION OF ANY FITTINGS, FINAL RIM AND INVERT ELEVATION OF ALL MANHOLES AND ANY OTHER PERTINENT INFORMATION NECESSARY TO LOCATE ITEMS CONSTRUCTED UNDER THIS PROJECT.
7. MAINTAIN SIX FEET AND PREFERABLY 10 FEET HORIZONTAL DISTANCE BETWEEN WATER MAINS AND SEWER MAINS AS A MINIMUM.
8. WASTEWATER FORCE MAINS, WASTEWATER COLLECTION LINES, AND STORM SEWERS SHOULD CROSS UNDER WATER MAINS WHENEVER POSSIBLE. A MINIMUM VERTICAL DISTANCE OF 12 INCHES BETWEEN THE INVERT OF THE UPPER PIPE AND THE CROWN OF THE LOWER PIPE SHALL BE PROVIDED WHENEVER POSSIBLE. WHERE THIS MINIMUM SEPARATION CANNOT BE MAINTAINED, THE CROSSING SHALL BE ARRANGED SO THAT THE WASTEWATER PIPE JOINTS AND THE WATER PIPE JOINTS ARE EQUIDISTANCE FROM THE POINT OF CROSSING, AND THE WATER MAIN SHALL BE CONSTRUCTED OF DUCTILE IRON PIPE (DIP) AT THE CROSSING. SUFFICIENT LENGTHS OF DIP MUST BE USED TO PROVIDE A MINIMUM SEPARATION OF 10 FEET BETWEEN ANY TWO JOINTS. ALL JOINTS ON THE WATER MAIN WITHIN 20 FEET OF THE CROSSING MUST BE MECHANICALLY RESTRAINED. A MINIMUM VERTICAL CLEARANCE OF 6 INCHES MUST BE MAINTAINED AT ALL CROSSINGS.
9. A PRE-CONSTRUCTION CONFERENCE BETWEEN THE ENGINEER, THE CONTRACTOR, AND FPUA/CITY COUNTY/FDOT SHALL BE MANDATORY PRIOR TO THE COMMENCEMENT OF CONSTRUCTION.
10. NO FIELD CHANGES OR DEVIATIONS FORM THE DESIGN SHALL BE MADE WITHOUT PRIOR APPROVAL FPUA/CITY/COUNTY/FDOT ENGINEER.
11. TRAFFIC CONTROL, BARRICADES, ETC. SHALL BE IN ACCORDANCE WITH THE FLORIDA DEPARTMENT OF TRANSPORTATION STANDARDS.
12. CONTRACTOR SHALL NOTIFY FORT PIERCE UTILITIES AUTHORITY 48 HOURS PRIOR TO COMMENCING CONSTRUCTION.
13. WASTEWATER FORCE MAIN SHALL BE POLYVINYL CHLORIDE CONFORMING TO AWWA C-900, AND SHALL BE CLASS 150, DR-18.
14. WASTEWATER FORCE MAIN SHALL BE GREEN IN COLOR.
15. FITTINGS SHALL BE DUCTILE IRON, CONFORMING TO ANSI/AWWA C-110/A21.10 CLASS 250 MIN. AT FULL WATER PRESSURE.
16. WASTEWATER FORCE MAIN SHALL BE MARKED BY THE USE OF CONTINUOUS 10 GAUGE THHN WIRE (GREEN IN COLOR) PERMANENTLY ATTACHED TO THE TOP OF THE FORCE MAIN WITH LOCATOR TAPE MARKED "SEWER" ON TAPE IN ACCORDANCE WITH FPUA SPECIFICATIONS.
17. MINIMUM COVER SHALL BE 36 INCHES, PIPES WITH COVER LESS THAN 30 INCHES SHALL REQUIRE PRIOR APPROVAL OF THE UTILITES ENGINEER AND SHALL BE CONSTRUCTED OF DUCTILE IRON PIPE.
18. EACH SERVICE LATERAL WILL BE MARKED WITH A LOCATOR BALL AS MANUFACTURED BY 3M CORPORATION, OR APPROVED EQUAL AS REQUIRED BY FPUA ENGINEER.
19. ALL MANHOLES SHALL HAVE SEWER RAIN GUARDS INSTALLED AS REQUIRED BY FPUA ENGINEER.
20. THE CONTRACTOR SHALL COMPLY WITH THE FLORIDA TRENCH SAFETY ACT REQUIREMENTS.

STANDARD SEPARATION STATEMENT FOR WATER / SEWER CONFLICTS

1. SANITARY SEWER, FORCE MAINS, AND STORM SEWERS SHOULD CROSS UNDER WATER MAINS WHENEVER POSSIBLE. SANITARY SEWERS, FORCE MAINS AND STORM SEWERS CROSSING UNDER WATER MAINS SHALL BE LAID TO PROVIDE A MINIMUM VERTICAL DISTANCE OF 6 INCHES, PREFERABLY 12 INCHES BETWEEN THE INVERT OF THE UPPER PIPE AND THE CROWN OF THE LOWER PIPE WHEN ABOVE, AND AT LEAST 12 INCHES OF SEPARATION WHEN THE WATER MAIN IS BELOW.

WHERE SANITARY SEWER, FORCE MAINS, STORM SEWERS MUST CROSS A WATER MAIN WITH LESS THAN 6 INCHES VERTICAL SEPARATION, BOTH THE SEWER AND WATER MAIN SHALL BE CONSTRUCTED OF DUCTILE IRON PIPE (DIP) CENTERED ON THE CROSSING. (DIP IS NOT REQUIRED FOR STORM SEWERS.) SUFFICIENT LENGTHS OF DIP MUST BE USED TO PROVIDE A MINIMUM SEPARATION OF 10 FEET BETWEEN TWO JOINTS. ALL JOINTS ON THE WATER MAIN WITHIN 20 FEET OF THE CROSSING MUST BE MECHANICALLY RESTRAINED.

ALL CROSSINGS SHALL BE ARRANGED SO THAT THE SEWER PIPE JOINTS AND WATER MAIN PIPE JOINTS ARE EQUIDISTANT FROM THE POINT OF CROSSING (PIPES CENTERED ON THE CROSSING). AT SUCH CROSSINGS PIPES SHALL BE ARRANGED SO THAT ALL WATER MAIN JOINTS ARE AT LEAST THREE FEET FROM ALL JOINTS IN VACUUM-TYPE SANITARY SEWERS, STORM SEWERS, STORMWATER FORCE MAINS, OR PIPELINES CONVEYING RECLAIMED WATER REGULATED UNDER PART III OF CHAPTER 62-610, F.A.C., AND AT LEAST SIX FEET FROM ALL JOINTS IN GRAVITY OR PRESSURE TYPE SANITARY SEWERS, WASTEWATER FORCE MAINS, OR PIPELINES CONVEYING RECLAIMED WATER NOT REGULATED UNDER PART III OF CHAPTER 62-610, F.A.C.

WHERE A NEW PIPE CONFLICTS WITH AN EXISTING PIPE WITH LESS THAN 6 INCHES VERTICAL CLEARANCE, THE NEW PIPE SHALL BE CONSTRUCTED OF DIP (EXCEPT STORM SEWERS) AND NEW PIPES SHALL BE ARRANGED TO MEET THE CROSSING REQUIREMENTS ABOVE.

2. A MINIMUM 3-FOOT HORIZONTAL SEPARATION SHALL BE MAINTAINED BETWEEN ANY TYPE OF STORM SEWER AND WATER MAIN IN PARALLEL INSTALLATIONS WHENEVER POSSIBLE.

A MINIMUM 3-FOOT, AND PREFERABLE 10-FOOT HORIZONTAL SEPARATION SHALL BE MAINTAINED BETWEEN VACUUM TYPE SANITARY SEWER AND WATER MAIN IN PARALLEL INSTALLATIONS WHENEVER POSSIBLE.

A MINIMUM 10-FOOT HORIZONTAL SEPARATION SHALL BE MAINTAINED BETWEEN "ONSITE SEWAGE TREATMENT AND DISPOSAL SYSTEM" AND WATER MAIN IN PARALLEL INSTALLATIONS WHENEVER POSSIBLE.

A MINIMUM 6-FOOT, AND PREFERABLE 10-FOOT HORIZONTAL SEPARATION SHALL BE MAINTAINED BETWEEN GRAVITY OR PRESSURE TYPE SANITARY SEWER, WASTEWATER FORCE MAIN, OR PIPELINE CONVEYING RECLAIMED WATER AND WATER MAIN IN PARALLEL INSTALLATIONS WHENEVER POSSIBLE. THE MINIMUM HORIZONTAL SEPARATION DISTANCE BETWEEN WATER MAINS AND GRAVITY-TYPE SANITARY SEWERS SHALL BE REDUCED TO 3 FOOT WHERE THE BOTTOM OF WATER MAIN IS LAID AT LEAST SIX INCHES ABOVE THE TOP OF THE SEWER

IN CASES WHERE IT IS NOT POSSIBLE TO MAINTAIN A 10-FOOT HORIZONTAL SEPARATION, THE WATER MAIN MUST BE LAID IN A SEPARATE TRENCH OR ON A UNDISTURBED EARTH SHELF LOCATED ON ONE SIDE OF THE SEWER OR FORCE MAIN AT SUCH AN ELEVATION THAT THE BOTTOM OF THE WATER MAIN IS AT LEAST 6 INCHES ABOVE THE TOP OF THE SEWER.

WHERE IT IS NOT POSSIBLE TO MAINTAIN A VERTICAL DISTANCE OF 6 INCHES IN PARALLEL INSTALLATIONS, THE WATER MAIN SHALL BE CONSTRUCTED OF DIP AND THE SEWER OR THE FORCE MAIN SHALL BE CONSTRUCTED OF DIP (EXCEPT STORM SEWER) WITH A MINIMUM VERTICAL DISTANCE OF 6 INCHES. THE WATER MAIN SHOULD ALWAYS BE ABOVE THE SEWER. JOINTS ON THE WATER MAIN SHALL BE LOCATED AS FAR APART AS POSSIBLE FROM JOINTS ON THE SEWER OR FORCE MAIN (STAGGERED JOINTS).

3. ALL DIP SHALL BE PRESSURE CLASS 250 MIN.. ADEQUATE PROTECTIVE MEASURES AGAINST CORROSION SHALL BE USED AS DETERMINED BY THE DESIGN ENGINEER.

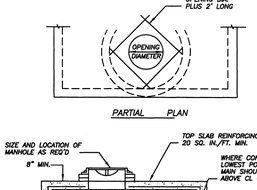

PARTIAL PLAN

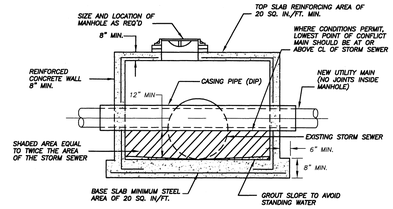

NOTES:

1) CONFLICT MANHOLE WILL BE ALLOWED WHERE DESIGN PROBLEMS AND ECONOMICS PROVE THEM TO BE THE ONLY VIABLE SOLUTION AS APPROVED BY FPUA ENGINEERING.
2) CONFLICT MANHOLES WILL NOT BE ALLOWED FOR WATER MAINS CROSSING GRAVITY WASTEWATER SYSTEMS.
3) WHEN NECESSARY FOR EXISTING WATER MAINS, THE CARRIER PIPE SHALL BE SLEEVED IN D.I.P.

CONFLICT MANHOLE
N.T.S.

GENERAL POLICY

WHERE COST JUSTIFIED AND OPERATIONALLY FEASIBLE, IT IS THE GENERAL POLICY OF THE F.P.U.A. TO PROVIDE WATER, ELECTRIC, SEWER AND GAS SERVICE FROM THE STREET SIDE OF A PIECE OF PROPERTY, DEPENDING ON FACTORS SUCH AS LOCATION OF EXISTING SUPPLY SOURCE FACILITIES, REAR OR SIDE LOT LINE SUPPLY MAY BE AUTHORIZED, BUT ONLY WITH PRIOR APPROVAL FROM THE F.P.U.A.

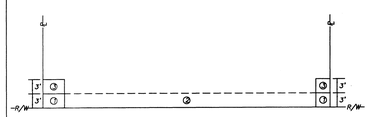

NOTES:

1. THE PREFERRED POINT OF CONNECTION TO THE F.P.U.A. WATER METER, AREA ① SHALL BE LOCATED IN THE CORNER OF THE PROPERTY SELECTED BY THE F.P.U.A. AS THE BEST LOCATION FOR THE WATER METER. EVERY EFFORT WILL BE MADE TO SELECT THE CORNER WHERE TWO WATER SERVICES AND METERS CAN BE CONNECTED.
2. IF PHYSICAL BARRIERS OR OTHER OBSTACLES PREVENT THE CONNECTION OF THE BUILDING SERVICE LINE TO THE F.P.U.A. WATER SERVICE, WITHIN AREA ①, THE F.P.U.A. ENGINEERING DEPARTMENT MAY AUTHORIZE THE CONNECTION ALONG THE PORTION OF THE R/W LINE MARKED AREA ②, OR ALONG THE PROPERTY LINES MARKED AREA ③.
3. HORIZONTAL SEPARATION OF WATER AND WASTEWATER SERVICES SHOULD BE A MINIMUM OF 6 FEET AND PREFERABLY 10 FEET.
4. ALL METERS SHALL BE INSTALLED IN AN UNRESTRICTED AREA FOLLOWING EASE OF ACCESS AND PROVIDING ADEQUATE PROTECTION.
5. THE F.P.U.A. SHALL BE RESPONSIBLE FOR THE MAINTENANCE AND REPAIR OF THE WATER LATERAL WITHIN THE EASEMENT OR RIGHT-OF-WAY, UP TO THE POINT OF CONNECTION.

WATER METER PLACEMENT
(N.T.S.)

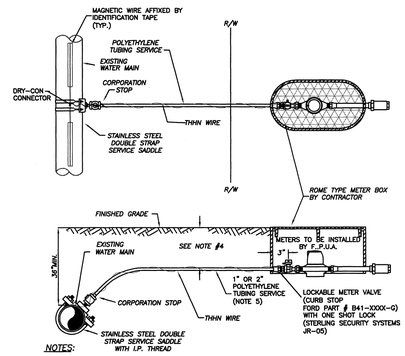

NOTES:

1. BLUE 10 GAUGE THHN WIRE SHALL BE ATTACHED TO THE SERVICE LINE.
2. WHERE SERVICES UNDER PAVEMENT ARE REQUIRED, THE POLYETHYLENE TUBING SHALL BE INSTALLED WITHIN SCHEDULE 40 PVC CASING PIPE.
3. 1" & 3/4" METER SIZES SHALL REQUIRE A LOCKABLE METER VALVE. (CURB STOP)
4. MINIMUM COVER IN UNPAVED AREAS SHALL BE 30", IN PAVED AREAS OR PLANNED ROADWAYS OR SWALES MIN. COVER SHALL BE 36".
5. FOR 2" COMMERCIAL SERVICE INSTALLATIONS, FPUA WILL INSTALL ABOVE GROUND METER PER DETAIL W-8.

TYPICAL SINGLE WATER SERVICE CONNECTION
(N.T.S.)

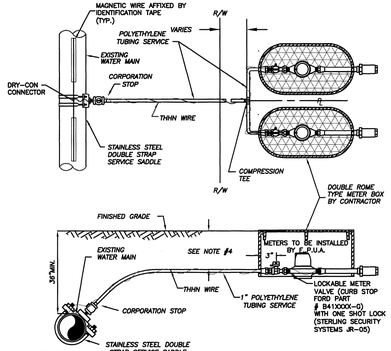

NOTES:

1. BLUE 10 GAUGE THHN WIRE SHALL BE ATTACHED TO THE SERVICE LINE.
2. WHERE SERVICES UNDER PAVEMENT ARE REQUIRED, THE POLYETHYLENE TUBING SHALL BE INSTALLED WITHIN SCHEDULE 40 PVC CASING PIPE.
3. 1" & 3/4" METER SIZES SHALL REQUIRE A LOCKABLE METER VALVE. (CURB STOP)
4. MINIMUM COVER IN UNPAVED AREAS SHALL BE 30", IN PAVED AREAS OR PLANNED ROADWAYS OR SWALES MIN. COVER SHALL BE 36".

TYPICAL DOUBLE WATER SERVICE CONNECTION
(N.T.S.)

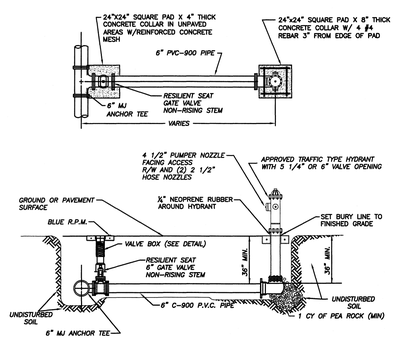

NOTES:

1. HYDRANT SHALL BE INSTALLED PLUMB & TRUE.
2. HYDRANT SHALL BE PAINTED CARNIVAL RED FROM FACTORY.
3. HEEL TO REST IN UNDISTURBED SOIL.
4. THE ONLY HYDRANTS ACCEPTABLE ARE: KENNEDY GUARDIAN, MUELLER CENTURION, & AMERICAN AVK, CLOW OR APPROVED EQUAL.
5. HYDRANT ASSEMBLY MUST BE RESTRAINED TO TEE.
6. ALL FITTINGS SHALL BE MECHANICAL JOINT.
7. ENTIRE ASSEMBLY TO BE MECHANICALLY RESTRAINED.
8. BLUE LOCATOR SHALL BE PLACED IN CENTER OF TRAVEL LANE CLOSEST TO HYDRANT.
9. ALL HYDRANT VALVE BOX COVERS SHALL BE PAINTED CARNIVAL RED.
10. LOCATE WIRE SHALL TERMINATE AT HYDRANT ISOLATION VALVE.
11. HYDRANTS SHALL BE NO MORE THAN FIFTEEN FEET (15 FT.) FROM THE CURB OF ROADWAYS OR FROM THE EDGE OF PAVEMENT. CLEARANCES OF SEVEN AND ONE HALF FEET (7FT-6IN.) IN FRONT OF AND TO THE SIDES OF THE FIRE HYDRANTS, WITH FOUR FOOT (4 FT.) CLEARANCE TO THE REAR OF HYDRANTS SHALL BE MAINTAINED.

TYPICAL FIRE HYDRANT ASSEMBLY
(N.T.S.)

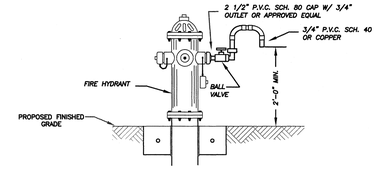

BACTERIOLOGICAL SAMPLING POINT @ FIRE HYDRANT
(N.T.S.)

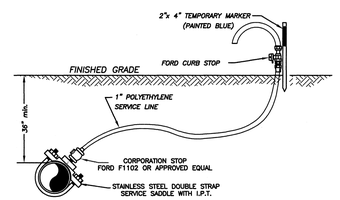

BACTERIOLOGICAL SAMPLING POINT @ WATER MAIN
(N.T.S.)

NOTE:

AFTER TESTING REMOVE 1" P.E. LINE AND CAP WITH BRASS PLUG AT CORPORATION STOP.

Valerie A. Schultz, P.E. PE# 69355
1701 S. 37th Street
Fort Pierce, FL 34947

VALERIE A. SCHULTZ LICENSE No 69355 STATE OF FLORIDA PROFESSIONAL ENGINEER 10-4-16

FORT PIERCE UTILITIES AUTHORITY

VERIFY SCALE
BAR IS EQUAL TO ONE INCH ON ORIGINAL DRAWING
0 1
ADJUST ALL SCALED DIMENSIONS ACCORDINGLY

DATE:	REVISION:	BY:	APPD:

NORTH 17TH STREET
UTILITY REPLACEMENT
WATER/WASTEWATER ENGINEERING

DESIGNED: VAS	DRAWING FILENAME
DRAWN BY: SLL	SCALE: 20'
APPROVED: VAS	DATE:

FT. PIERCE UTILITIES AUTHORITY
1701 SOUTH 37TH STREET
FT. PIERCE, FLORIDA 34947
(772) 466-1600 / FAX (772) 468-2414

SHEET TYPE: PLAN / PROFILE
SHEET #: 50

GENERAL POLICY

WHERE COST JUSTIFIED AND OPERATIONALLY FEASIBLE, IT IS THE GENERAL POLICY OF THE F.P.U.A. TO PROVIDE WATER, ELECTRIC, SEWER AND GAS SERVICE FROM THE STREET SIDE OF A PIECE OF PROPERTY, DEPENDING ON FACTORS SUCH AS LOCATION OF EXISTING SUPPLY SOURCE, FACILITIES, REAR OR SIDE LOT LINE SUPPLY MAY BE AUTHORIZED, BUT ONLY WITH PRIOR APPROVAL FROM THE F.P.U.A.

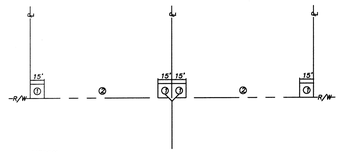

NOTES:

1. THE PREFERRED POINT OF CONNECTION TO THE F.P.U.A. SEWER LATERAL, AREA ① , SHALL BE LOCATED IN THE CORNER OF THE PROPERTY SELECTED BY THE F.P.U.A. AS THE BEST LOCATION FOR THE LATERAL. EVERY EFFORT WILL BE MADE TO SELECT THE CORNER WHERE TWO LATERALS CAN BE CONNECTED IN A "Y" CONFIGURATION AS SHOWN.
2. IF PHYSICAL BARRIERS OR OTHER OBSTACLES PREVENT THE CONNECTION OF THE BUILDING SERVICE LINE TO THE F.P.U.A. SEWER LATERAL WITHIN AREA ① , THE F.P.U.A. ENGINEERING DEPARTMENT MAY AUTHORIZE THE CONNECTION ALONG THE PORTION OF THE R/W LINE MARKED AREA ② .
3. HORIZONTAL SEPARATION OF WATER AND WASTEWATER SERVICES SHOULD BE A MINIMUM OF SIX FEET AND PREFERABLY 10 FEET.
4. THE WASTEWATER LATERAL SHALL BE LOCATED WITHIN RIGHT-OF-WAY AND TERMINATE AT THE PROPERTY LINE.
5. THE F.P.U.A. SHALL BE RESPONSIBLE FOR THE MAINTENANCE AND REPAIR OF THE WASTEWATER LATERAL WITHIN THE EASEMENT OR RIGHT-OF-WAY, UP TO THE POINT OF CONNECTION.

WASTEWATER SERVICE PLACEMENT
(N.T.S.)

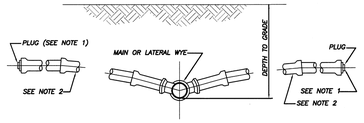

NOTES:

1) BALL TYPE WASTEWATER LOCATOR BY 3M CORP. OR APPROVED EQUAL.
2) MINIMUM SLOPE OF 1/8" PER FOOT, USE GREATER SLOPE WHERE POSSIBLE.
3) SERVICE LATERAL SHALL TERMINATE WITH A CLEANOUT.
4) INSTALL CLEANOUT AT THE PROPERTY LINE. REFER TO DETAIL S-1 FOR SPECIFIC PROPERTY LAYOUT.

SERVICE CONNECTION
(N.T.S.)

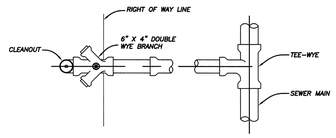

DOUBLE LATERAL SERVICE CONNECTION
AT PROPERTY LINE

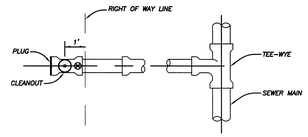

SINGLE SERVICE LATERAL CONNECTION

⊕ = BALL TYPE WASTEWATER LOCATOR INSTALLED ABOVE THIS POINT
BALL BY 3M CORP. OR APPROVED EQUAL
SERVICE LATERAL SHALL TERMINATE WITH A CLEANOUT

SERVICE CONNECTION
(N.T.S.)

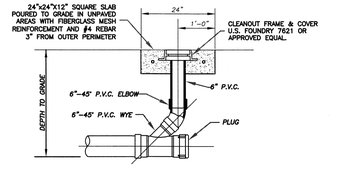

SECTION

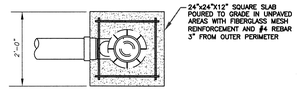

PLAN

RESIDENTIAL CLEANOUT DETAIL
(N.T.S.)

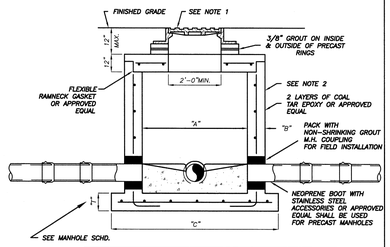

PIPE DIA.	"A"	"B"	"C"	BOT. SLAB "T"
8"-24"	4'-0"	"B"	76"	8"
30"-36"	5'-0"	"B"	88"	10"
42"-48"	6'-0"	"B"	100"	12"

TYPICAL MANHOLE DIMENSIONS

NOTES:

1) MANHOLE FRAME & COVER WITH THE WORDS " SANITARY SEWER" CAST IN THE COVER. U.S. FOUNDRY 170 OR APPROVED EQUAL.
2) ALL CONCRETE MANHOLES TO BE 4000 P.S.I. TO MEET OR EXCEED ASTM C478 ALL CEMENT TO BE TYPE II ACID RESISTANT. REINFORCING AREA OF 0.02 SQ. IN/FT FOR WALL SECTION MIN. TO MEET OR EXCEED ASTM A 185.
3) A MAXIMUM OF 2 LAYERS OF PRECAST CONCRETE RINGS, IF REQUIRED.
4) RAIN GUARDS SHALL BE INSTALLED IN MANHOLES THAT HAVE GRAVITY MAINS 12" OR LESS.

SHALLOW MANHOLE
DEPTH OF LESS THAN 5'-0"
(N.T.S.)

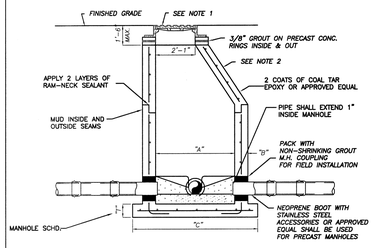

PIPE DIA.	"A"	"B"	"C"	BOT. SLAB "T"
8"-24"	4'-0"	"B"	76"	8"
30"-36"	5'-0"	"B"	88"	10"
42"-48"	6'-0"	"B"	100"	12"

TYPICAL MANHOLE DIMENSIONS

NOTES:

1) MANHOLE FRAME & COVER WITH THE WORDS " SANITARY SEWER" CAST IN THE COVER. U.S. FOUNDRY 170 OR APPROVED EQUAL.
2) ALL CONCRETE MANHOLES TO BE 4000 P.S.I. TO MEET OR EXCEED ASTM C478 ALL CEMENT TO BE TYPE II ACID RESISTANT. REINFORCING AREA OF 0.02 SQ. IN/FT FOR WALL SECTION MIN. TO MEET OR EXCEED ASTM A 185.
3) A MAXIMUM OF 2 LAYERS OF PRECAST CONCRETE RINGS, IF REQUIRED.
4) RAIN GUARDS SHALL BE INSTALLED IN MANHOLES THAT HAVE GRAVITY MAINS 12" OR LESS.

STANDARD MANHOLE
DEPTH 5'-0" AND GREATER
(N.T.S.)

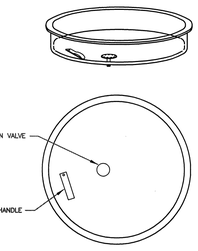

NOTES:

1) SEWER RAIN GUARDS SHALL BE INSTALLED ON ALL MANHOLES WHERE GRAVITY MAINS ARE 12" OR LESS AND IN AREAS DESIGNATED BY ENGINEER TO BE IN A FLOOD AREA.
2) SEWER RAIN GUARDS SHALL BE MANUFACTURED BY PARSON ENVIRONMENTAL PRODUCTS, INC., PART # PMI-23S (PARSON MANHOLE INSERTS) WITH DOUBLE VALVING, OR APPROVED EQUAL.
3) RAINGUARDS MUST BE "SNUG" FIT.

RAINGUARD DETAIL
(N.T.S.)

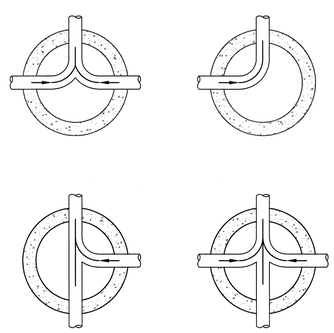

NOTES:

1) INVERT CHANNELS TO BE CONSTRUCTED FOR SMOOTH FLOW WITH NO OBSTRUCTIONS.
2) SPILLWAYS SHALL BE CONSTRUCTED BETWEEN PIPES WITH DIFFERENT INVERT ELEVATIONS PROVIDING FOR SMOOTH FLOWS.

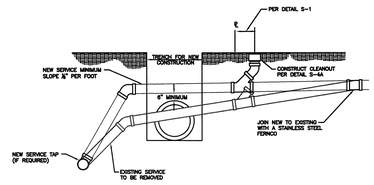

SANITARY LATERAL RELOCATION OPTION OVER NEW CONSTRUCTION

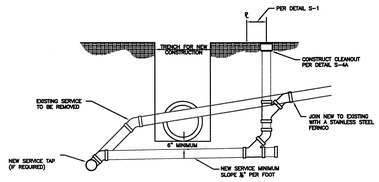

SANITARY LATERAL RELOCATION OPTION UNDER NEW CONSTRUCTION

NOTES:
1. ALL PIPING SHALL BE SDR-26 WITH SDR-26 FITTINGS.

VALERIE A. SCHULTE LICENSE No 69355 STATE OF FLORIDA PROFESSIONAL ENGINEER
Valerie A. Schulte, P.E. PE# 69355
1701 S. 37th Street
Fort Pierce, FL 34947

FORT PIERCE UTILITIES AUTHORITY

VERIFY SCALE
BAR IS EQUAL TO ONE INCH ON ORIGINAL DRAWING
0 ▬▬ 1
ADJUST ALL SCALED DIMENSIONS ACCORDINGLY

DATE:	REVISION:	BY:	APPD:

DESIGNED: VAS	DRAWING FILENAME
DRAWN BY: SLL	SCALE: 20'
APPROVED: VAS	DATE:

NORTH 17TH STREET
UTILITY REPLACEMENT
WATER/WASTEWATER ENGINEERING

FT. PIERCE UTILITIES AUTHORITY
1701 SOUTH 37TH STREET
FT. PIERCE, FLORIDA 34947
(772) 466-1600 / FAX (772) 468-2414

SHEET TYPE	SHEET #
PLAN / PROFILE	51

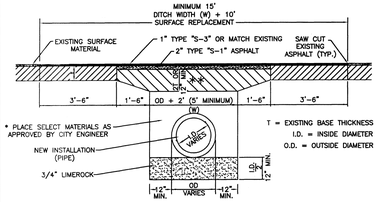

* INITIAL BACKFILL SHALL BE PLACED TO 12" ABOVE THE PIPE IN 6" LIFTS. BACFILL SHALL BE MECHANICALLY TAMPED TO A MINIMUM OF 95% OF MAXIMUM DENSITY AS DETERMINED BY AASHTO METHOD T-99. UPPERMOST 12" BE COMPACTED TO 98% OF T-99.

** LIMEROCK OR CRUSHED COQUINA COMPACTED TO 98% OF MAXIMUM DENSITY AS DETERMINED BY AASHTO METHOD T-180

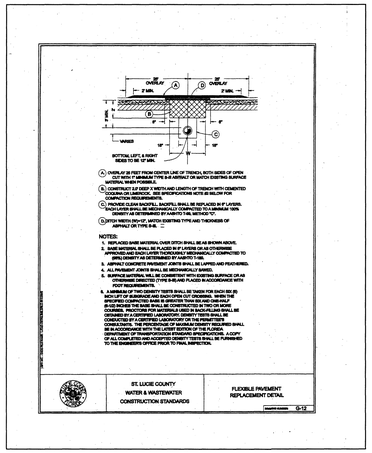

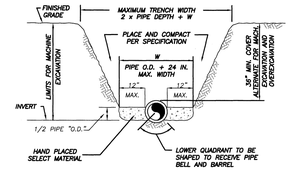

NOTES:

1) THE CONTRACTOR SHALL COMPLY WITH REQUIREMENTS OF THE FLORIDA TRENCH SAFETY ACT.

2) INITIAL BACKFILL SHALL BE HAND PLACED TO 12" ABOVE THE PIPE. BACKFILL SHALL BE MECHANICALLY TAMPED TO A MINIMUM OF 100% OF MAX. DENSITY AS DETERMINED BY AASHTO METHOD T-99.

TYPICAL TRENCH DETAIL
N.T.S.

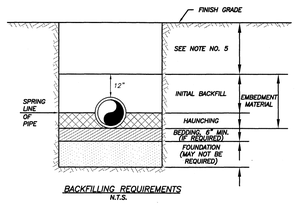

BACKFILLING REQUIREMENTS
N.T.S.

NOTES:

1) IN CERTAIN SOIL CONDITIONS A FOUNDATION MAY BE REQUIRED.

2) BEDDING IS REQUIRED PRIMARILY TO BRING THE TRENCH BOTTOM UP TO GRADE. BEDDING MATERIALS SHALL PROVIDE A UNIFORM AND ADEQUATE LONGITUDINAL SUPPORT UNDER THE PIPE.

3) HAUNCHING MATERIAL SHALL BE HAND PLACED TO THE SPRINGLINE OF THE PIPE. MATERIAL SHALL BE CONSOLIDATED UNDER THE PIPE AND HAND TAMPED TO PROVIDE ADEQUATE SIDE SUPPORT.

4) INITIAL BACKFILL MATERIAL SHALL BE HAND PLACED TO 12" ABOVE THE TOP OF PIPE. THE SOIL SHALL BE COMPACTED TO 100% MAX. DENSITY.(AASHTO T-99)

5) BACKFILL SHALL BE COMPACTED TO 100% OF MAX. DENSITY AS PER AASHTO T-99, TO A POINT 30" BELOW PROPOSED PROFILE GRADE OR EXISTING GRADE. THE FINAL 30" OF BACKFILL SHALL BE COMPACTED TO 98% OF MAX. DENSITY AS PER AASHTO T-180.

6) DENSITY TEST SHALL BE PERFORMED AT AREAS DETERMINED BY THE UTILITIES ENGINEER OR PERMIT AGENCY HAVING JURISDICTION, AT THE CONTRACTORS EXPENSE.

7) CONTRACTOR TO COMPLY WITH ALL FEDERAL, STATE AND LOCAL TRENCH SAFETY REGULATIONS.

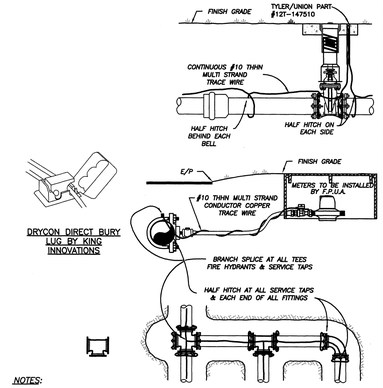

DRYCON DIRECT BURY LUG BY KING INNOVATIONS

NOTES:

1) TRACE WIRE IS REQUIRED ON ALL PIPE AS NOTED BY UTILITIES ENGINEER AND SHOWN IN STANDARD DETAILS.
2) INCLUDE ALL COST OF MATERIAL & LABOR IN PRICE OF PIPE.
3) CONTRACTOR IS RESPONSIBLE FOR CONTINUITY OF ALL TRACE WIRE.

TRACE WIRE
(N.T.S.)

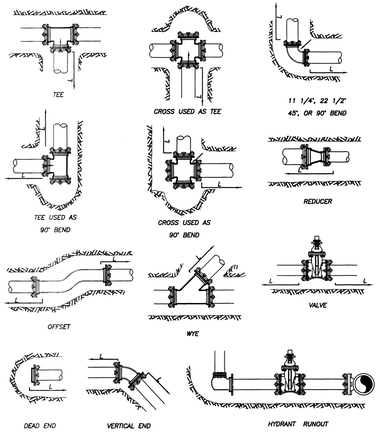

MECHANICAL JOINT ANCHORING REQUIREMENTS
N.T.S.

MECHANICAL JOINT RESTRAINT NOTES

NOTES:

1) THE ENGINEER SHALL BE RESPONSIBLE FOR DETERMINING THE REQUIRED LENGTH TO BE RESTRAINED BASED UPON THE PROJECT AREA SOIL TYPE, PROPOSED TRENCH CONDITIONS AND DEPTH, PRESSURE OF 150 PSI, AND A SAFETY FACTOR OF TWO (2). A DRAWING OF EVERY TYPICAL FITTING ASSEMBLY WITHIN THE PROJECT SHALL BE SUBMITTED WHICH REFLECTS THE RESTRAINT DETAIL PROPOSED FOR USE, INCLUDING LENGTH OF PIPE RESTRAINT.

2) REQUIRED RESTRAINED LENGTH CALCULATIONS SHALL ALSO CONSIDER THE CONDITIONS OF OTHER BENDS OR FITTINGS THAT WILL BE LOCATED WITHIN THE CALCULATED RESTRAINED LENGTH (L) OF THE BEND OR FITTING IN QUESTION.

3) EVERY JOINT OR FITTING MUST BE RESTRAINED ON BOTH SIDES OF THE BEND AND FOR TEES ALONG THE BEND ALSO.

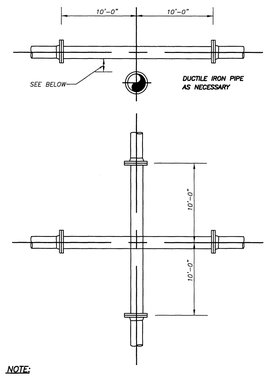

NOTE:

PLEASE REFER TO FORT PIERCE UTILITIES STANDARD SEPARATION STATEMENT FOR WATER / SEWER CONFLICTS.

UTILITY CROSSING DETAIL
N.T.S.

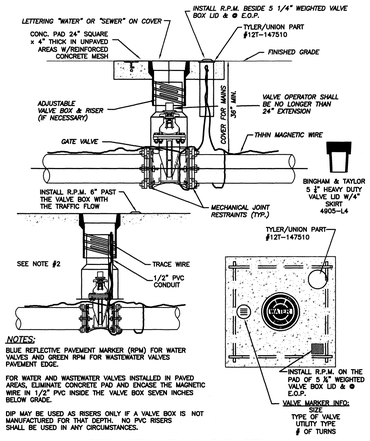

NOTES:

1. BLUE REFLECTIVE PAVEMENT MARKER (RPM) FOR WATER VALVES AND GREEN RPM FOR WASTEWATER VALVES PAVEMENT EDGE.
2. FOR WATER AND WASTEWATER VALVES INSTALLED IN PAVED AREAS, ELIMINATE CONCRETE PAD AND ENCASE THE MAGNETIC WIRE IN 1/2" PVC INSIDE THE VALVE BOX SEVEN INCHES BELOW GRADE.
3. DIP MAY BE USED AS RISERS ONLY IF A VALVE BOX IS NOT MANUFACTURED FOR THAT DEPTH. NO PVC RISERS SHALL BE USED IN ANY CIRCUMSTANCES.

TYPICAL GATE VALVE & VALVE BOX DETAIL
N.T.S.

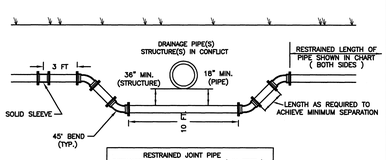

RESTRAINED JOINT PIPE DISTANCES FOR DEFLECTED PIPE (IN FEET)		
PIPE SIZE	90° BEND	45° BEND
2"	48 FT.	21 FT.
4"	70 FT.	29 FT.
6"	99 FT.	41 FT.
8"	129 FT.	54 FT.

1. PROVIDE RESTRAINED JOINTS AT CHANGES IN DIRECTION OF ALL PIPE.
2. DISTANCES (FEET) SHALL APPLY TO LENGTHS OF PIPE ON EACH SIDE OF THE FITTING.
3. CONSIDER DEAD ENDS EQUIVALENT TO 90° BENDS.
4. TEE SHALL BE RESTRAINED ON BRANCH BASED ON SAME DISTANCE AS 90° BEND OF THE SIZE OF THE BRANCH.
5. DETAIL APPLIES TO BOTH HORIZONTAL AND VERTICAL DEFLECTIONS.
6. IF MULTIPLE PIPES/STRUCTURES ARE IN CONFLICT IN CLOSE PROXIMITY, EXTEND 10 FEET TYPICAL PORTION OF CONFLICT DEFLECTION AS NEEDED TO MAINTAIN DEFLECTION SPACING.

PIPE CONFLICT DETAIL

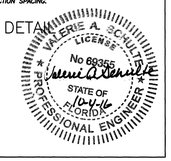

Valerie A. Schulte, P.E. PE# 69355
1701 S. 37th Street
Fort Pierce, FL 34947

FORT PIERCE UTILITIES AUTHORITY

VERIFY SCALE
BAR IS EQUAL TO ONE INCH ON ORIGINAL DRAWING
0 1
ADJUST ALL SCALED DIMENSIONS ACCORDINGLY

DATE:	REVISION:	BY:	APPD:

DESIGNED: VAS	DRAWING FILENAME
DRAWN BY: SLL	SCALE: 20'
APPROVED: VAS	DATE:

NORTH 17TH STREET
UTILITY REPLACEMENT
WATER/WASTEWATER ENGINEERING

FT. PIERCE UTILITIES AUTHORITY
1701 SOUTH 37TH STREET
FT. PIERCE, FLORIDA 34947
(772) 466-1600 / FAX (772) 468-2414

SHEET TYPE	SHEET #
PLAN / PROFILE	52

City Commission Regular Meeting **11.d.**

Meeting Date: 02/19/2019

Re: Approval of Change Order No. 6 to Lynch Paving- Surfside Neighborhood Drainag Improvements

Submitted For: John Andrews, City Engineer, Engineering

SUBJECT:

Approval of Change Order No. 6 to Lynch Paving and Construction Company in an amount not to exceed $1,017,583.85 for Surfside Drainage Improvements (pending approval by City Attorney of form and correctness).

SUMMARY:

The proposed work will be provided by Lynch Paving under Bid No. 2016-016.
The Streets identified for Roadway Drainage Improvements consist of the following:

1. Bayshore Drive - Sunset Isles to Melaleuca Drive
2. Sunset Isle Road - Bayshore Drive to Eucalyptus Drive
3. Rio Vista Drive - Western roadway terminus to Jacaranda Drive

The improvements will consist of valley gutters constructed along the streets connecting to existing stormwater inlets, elimination of the remaining roadside swales via regrading of the right-of-way and re-establishment of the roadway crown by asphalt overlay.

RECOMMENDATION:

Engineering recommends approval of Change Order No. 6

ALTERNATIVES:

Deny and perform maintenance activities to re-create the roadside swale system

RESPONSIBLE STAFF:

Engineering Department

COORDINATED WITH:

Public Works Department

Fiscal Impact

Budgeted Y/N:	Y
Fiscal Year:	2019
Account:	403-4300-538-34-90
Amount:	1,017,583.85

OTHER INFORMATION:

The funds will be encumbered from SMU Account No.403-4300-538-34-90

Attachments

Final Plans
CO 6

Form Review

Inbox	Reviewed By	Date
City Manager	Nick Mimms	02/12/2019 11:18 AM

Form Started By: Ed Seissiger
Started On: 02/05/2019 10:58 AM
Final Approval Date: 02/12/2019

CONTRACT PLANS

SURFSIDE NEIGHBORHOOD ROADWAY IMPROVEMENTS

INDEX OF ROADWAY PLANS

SHEET NO.	SHEET DESCRIPTION
1	KEY SHEET
2	GENERAL NOTES
3	SUMMARY OF PAY ITEMS
4	RIO VISTA DRIVE TYPICAL SECTION
5	BAYSHORE DRIVE TYPICAL SECTION
6	PLAN SHEET LAYOUT
7 - 10	RIO VISTA DRIVE PLAN & PROFILE
11 - 13	BAYSHORE DRIVE PLAN & PROFILE
14	MISCELLANEOUS DETAILS
15	SUMMARY OF TURNOUTS
16	DRAINAGE DETAILS
17 - 32	RIO VISTA DRIVE CROSS-SECTIONS
33 - 41	BAYSHORE DRIVE CROSS-SECTIONS
42 - 43	RIO VISTA DRIVE SIGNING & MARKING
44 - 45	BAYSHORE DRIVE SIGNING & MARKING

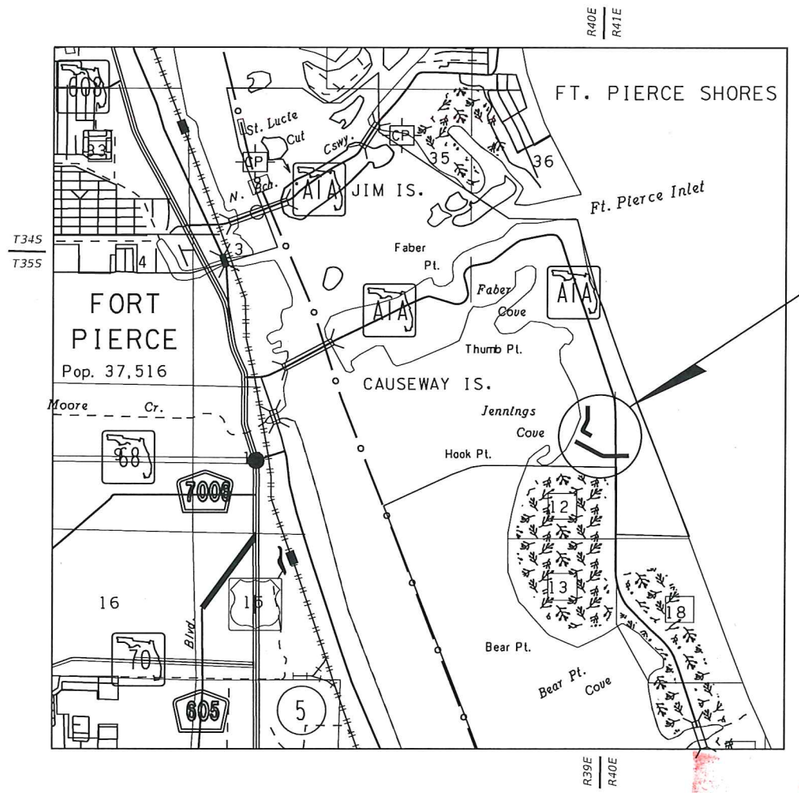

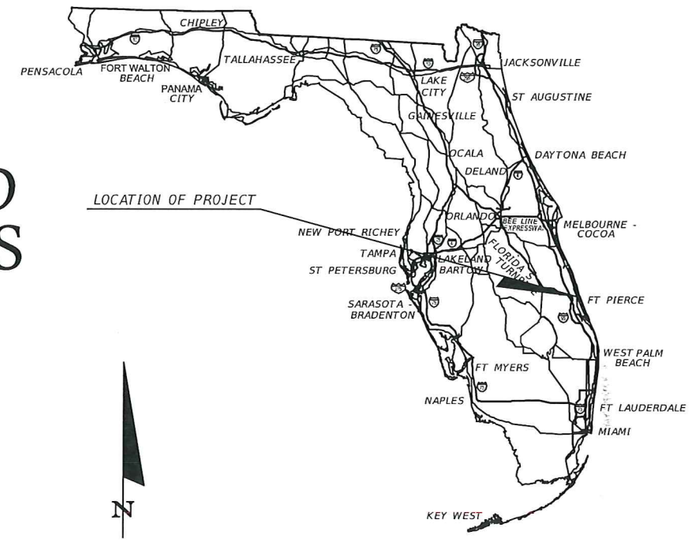

N

0 0.5 1
Miles

LOCATION OF PROJECT

ROADWAY SHOP DRAWINGS
TO BE SUBMITTED TO:

KIMLEY-HORN AND ASSOCIATES, INC.
BRIAN GOOD, P.E.
445 24th STREET, SUITE 200
VERO BEACH, FLORIDA 32960

PLANS PREPARED BY:

Kimley»Horn

445 24th STREET, SUITE 200
VERO BEACH, FL 32960
TEL (772) 794-4100
PROJECT NUMBER: 047922017
CERTIFICATE OF AUTHORIZATION: 00000696

BRIAN A. GOOD LICENSE No 56939 STATE OF FLORIDA PROFESSIONAL ENGINEER

ROADWAY PLANS
ENGINEER OF RECORD: BRIAN GOOD, P.E.

P.E. NO.: 56939

APR 17 2018

NOTE: THE SCALE OF THESE PLANS MAY HAVE CHANGED DUE TO REPRODUCTION.

PREPARED FOR:

CITY OF FORT PIERCE

RECEIVED
APR 20 2018
CITY OF FORT PIERCE
ENGINEERING DEPARTMENT

FINAL PLANS
APRIL 2018

SHEET NO. 1

shawn.singh 4/19/2018 11:23:54 AM K:\VRB_Roadway\047922017 - Surfside Rdwy Improv\Cadd\Rdwy\KEYSRD01.DGN

GENERAL NOTES

1. ALL CONSTRUCTION AND MATERIALS SHALL CONFORM TO APPLICABLE STANDARDS AND SPECIFICATIONS OF THE CITY OF FORT PIERCE, FLORIDA STANDARD CONTRACT DOCUMENTS AND SPECIFICATIONS FOR PUBLIC WORK PROJECTS, LATEST ISSUE.

2. CONSTRUCTION DETAILS SHALL BE IN ACCORDANCE WITH STATE OF FLORIDA DEPARTMENT OF TRANSPORTATION ROADWAY AND TRAFFIC DESIGN STANDARDS, LATEST ISSUE.

3. THE INFORMATION PROVIDED IN THESE DRAWINGS IS SOLELY TO ASSIST THE CONTRACTOR IN ASSESSING THE NATURE AND EXTENT OF CONDITIONS WHICH WILL BE ENCOUNTERED DURING THE COURSE OF WORK. THE CONTRACTORS ARE DIRECTED, PRIOR TO BIDDING, TO CONDUCT WHATEVER INVESTIGATIONS THEY DEEM NECESSARY TO ARRIVE AT THEIR OWN CONCLUSION REGARDING THE ACTUAL CONDITIONS THAT WILL BE ENCOUNTERED, AND UPON WHICH BIDS WILL BE BASED.

4. LOCATIONS, ELEVATIONS AND DIMENSIONS OF EXISTING UTILITIES AND OTHER FEATURES ARE SHOWN ACCORDING TO THE BEST INFORMATION AVAILABLE AT THE TIME OF THE PREPARATION OF THESE PLANS. THE CONTRACTOR SHALL VERIFY THE LOCATIONS, ELEVATIONS, AND OTHER FEATURES AFFECTING HIS/HER WORK PRIOR TO CONSTRUCTION, AND NOTIFY THE CITY OF FORT PIERCE, ENGINEERING DEPARTMENT IMMEDIATELY WHEN CONFLICT BETWEEN DRAWINGS AND ACTUAL CONDITIONS ARE DISCOVERED. THE CONTRACTOR SHALL WORK AS NEEDED TO AVOID CONFLICT WITH EXISTING UTILITIES (NO ADDITIONAL COST SHALL BE PAID FOR THIS WORK). EXISTING UTILITIES SHALL BE MAINTAINED IN SERVICE DURING CONSTRUCTION UNLESS OTHERWISE APPROVED BY THE UTILITY OWNER.

PRE-TRENCHING IN THE ALIGNMENT AND GRADE OF PROPOSED PIPES, STRUCTURES, CONDUITS AND/OR SUB-GRADE SHALL BE PERFORMED FOURTEEN DAYS IN ADVANCE OF ITS CONSTRUCTION. THE CONTRACTOR SHALL PROVIDE UNDERGROUND UTILITY OWNERS AND THE CITY WITH A FOURTEEN DAY ADVANCE NOTICE OF ANY CONFLICT WITH PROPOSED CONSTRUCTION. PAYMENT FOR PRE-TRENCHING, SURVEY, AND BACKFILLING SHALL BE INCLUDED IN THE UNIT COST OF THE RELATED BID ITEM FOR WORK BEING DONE.

5. THE CONTRACTOR SHALL COORDINATE WITH UTILITIES TO ARRANGE RELOCATION AND TEMPORARY SUPPORT OF UTILITY FEATURES, ETC. AS NECESSARY TO COMPLETE THE WORK.

6. IT SHALL BE THE CONTRACTOR'S RESPONSIBILITY TO LOCATE AND PROTECT ANY AND ALL EXISTING UTILITIES ON THIS PROJECT. THE CONTRACTOR WILL RECEIVE NO DIRECT PAYMENT TO SUPPORT AND/OR PROTECT ANY AND ALL UTILITIES. PAYMENT FOR THIS WORK SHALL BE INCLUDED IN THE UNIT COST OF THE RELATED BID ITEM FOR WORK BEING DONE.

7. THE CONTRACTOR SHALL GIVE AT LEAST 48 HOURS NOTICE TO UTILITY COMPANIES TO PROVIDE FOR THE LOCATION OF EXISTING UNDERGROUND UTILITIES IN ADVANCE OF CONSTRUCTION. CONTACT UTILITIES NOTIFICATION CENTER AT 1-800-432-4770.

8. THE CONTRACTOR IS REQUIRED TO OBTAIN ALL APPLICABLE CONSTRUCTION PERMITS PRIOR TO START OF CONSTRUCTION.

9. THE CONTRACTOR SHALL NOTIFY THE CITY OF FORT PIERCE, ENGINEERING DEPARTMENT AND CITY'S FIELD REPRESENTATIVE, AT LEAST 48 HOURS PRIOR TO CONSTRUCTION.

10. THE CONTRACTOR SHALL CONTACT THE CITY OF FORT PIERCE, ENGINEERING DEPARTMENT AND CITY'S FIELD REPRESENTATIVE IMMEDIATELY OF ANY CONFLICT ARISING DURING CONSTRUCTION OF ANY IMPROVEMENTS SHOWN ON THESE DRAWINGS.

11. B.M. DATA IS NORTH AMERICAN VERTICAL DATUM OF 1988 (NAVD 88).

ANY NAVD 88 MONUMENT WITHIN THE LIMITS OF CONSTRUCTION IS TO BE PROTECTED.
IF IN DANGER OF BEING DAMAGE, NOTIFY:
GEODETIC INFORMATION CENTER
ATTN: MARK MAINTENANCE SECTION N/CG-162
6001 EXECUTIVE BLVD.
ROCKVILLE MARYLAND 20852

12. EXISTING SECTION CORNERS AND 1/4 SECTION CORNERS, AND OTHER LAND MARKERS OR MONUMENTS LOCATED WITHIN PROPOSED CONSTRUCTION ARE TO BE REFERENCED BY THE CONTRACTOR PRIOR TO CONSTRUCTION AND RESET AFTER CONSTRUCTION USING REGISTERED LAND SURVEYOR LICENSED IN THE STATE OF FLORIDA.

13. STORM SEWER PIPE LENGTHS SHOWN ARE APPROXIMATE, AND MAY BE ADJUSTED AS REQUIRED UPON APROVAL BY THE CITY OF FORT PIERCE, ENGINEERING DEPARTMENT.

14. INSTALLATION OF ALL STORM SEWERS, INLETS, MANHOLES AND APPURTENANCES SHALL BE IN ACCORDANCE WITH THE REQUIREMENTS OF THE CITY OF FORT PIERCE, ENGINEERING DEPARTMENT AS INDICATED ON THE DRAWINGS. ALL REINFORCED CONCRETE PIPE SHALL BE CLASS III PIPE.

15. ALL CATCH BASINS AND PIPE INVERTS SHALL BE AS INDICATED ON THE DRAWINGS.

16. CONTRACTOR SHALL ADJUST ALL UTILITY LIDS AND COVERS TO FINISHED GRADE AS REQUIRED.

17. ALL COMPLETED DRAINAGE STRUCTURES SHALL BE PROTECTED FROM CONTAMINATION BY SILT AND CONSTRUCTION DEBRIS. THE CONTRACTOR SHALL PLACE PLYWOOD ON, OR FILTER FABRIC BETWEEN FRAME AND INLET GRATE UNTIL CONSTRUCTION OPERATIONS ARE COMPLETED. ALL DRAINAGE STRUCTURES (EXISTING AND PROPOSED) WITHIN PROJECT LIMITS SHALL BE CLEANED PRIOR TO FINAL ACCEPTANCE. PAYMENT FOR THIS WORK SHALL BE INCLUDED IN THE UNIT COST OF THE RELATED BID ITEM FOR WORK BEING DONE.

18. ALL ROAD CROSSINGS ARE OPEN CUT UNLESS OTHERWISE NOTED ON THE DRAWINGS.

19. THE CONTRACTOR SHALL REPLACE ALL PAVING, STABILIZING EARTH, DRIVEWAYS, SIDEWALKS, ETC. WITH THE SAME TYPE OF MATERIAL THAT WAS REMOVED DURING CONSTRUCTION OR AS DIRECTED BY THE CITY OF FORT PIERCE FIELD ENGINEER.

20. THE CONTRACTOR SHALL NOT ENCROACH INTO PRIVATE PROPERTY WITH PERSONNEL, MATERIAL OR EQUIPMENT WITHOUT WRITTEN PERMISSION FROM THE PROPERTY OWNER.

21. THE CONTRACTOR SHALL BE RESPONSIBLE FOR DAMAGE, REMOVAL OR MODIFICATION, ACCIDENTALLY OR PURPOSELY, CAUSED TO ANY IRRIGATION SYSTEMS, PRIVATE OR PUBLIC. THE CONTRACTOR SHALL REPLACE ANY DAMAGED, REMOVED, OR MODIFIED IRRIGATION PIPES, SPRINKLER HEADS OR OTHER PERTINENT APPURTENANCES AT NO ADDITIONAL COST.

22. REGARDING MAIL BOXES, WALLS, FENCES, SECURITY GATE TRACKING, OR OTHER PRIVATE PROPERTY OR IMPROVEMENTS THAT SHALL BE TEMPORARILY RELOCATED AND REPLACED, THE CONTRACTOR SHALL COORDINATE WITH THE APPROPRIATE OWNER. ANY AND ALL COSTS ASSOCIATED WITH COORDINATING, REMOVING, AND REPLACING ANY PROPERTY ITEMS SHALL BE INCLUDED IN THE UNIT COST OF THE RELATED BID ITEM FOR WORK BEING DONE.

23. CONTRACTOR SHALL PROVIDE MAINTENANCE OF TRAFFIC IN ACCORDANCE WITH FDOT INDEX 600 SERIES, MUTCD AND THESE PLANS. THE CONTRACTOR SHALL MAINTAIN AT ALL TIMES VEHICULAR AND PEDESTRIAN ACCESS TO ALL RESIDENCES AND/OR BUSINESS.

24. NO TREES ARE TO BE REMOVED OR RELOCATED WITHOUT PRIOR APPROVAL FROM THE CITY OF FORT PIERCE FIELD ENGINEER (CITY PERMIT REQUIRED FOR ANY TREE REMOVAL).

25. COMPLETE 'AS-BUILT' INFORMATION RELATIVE TO LOCATION, SIZE AND DEPTH OF NEW PIPES, MANHOLES, INLETS, ETC., SHALL BE ACCURATELY RECORDED BY THE CONTRACTOR AND SUBMITTED (SIGNED AND SEALED BY A FLORIDA CERTIFIED P.L.S.) TO THE CITY OF FORT PIERCE, ENGINEERING DEPARTMENT PRIOR TO FINAL ACCEPTANCE OF THE WORK. ALL RECORD INFORMATION ON EXISTING UTILITY CROSSINGS ENCOUNTERED DURING CONSTRUCTION, INCLUDING BUT NOT LIMITED TO PIPES, INLETS, MANHOLE, ETC., SHALL BE RECORDED BY A FLORIDA REGISTERED SURVEYOR AND SHOWN ON THE RECORD DRAWINGS. THE COST OF SIGNED AND SEALED AS-BUILTS SHALL BE INCLUDED IN OVERALL BID AND NO ADDITIONAL COMPENSATION WILL BE ALLOWED.

26. THE CONTRACTOR SHALL BE RESPONSIBLE FOR MAINTAINING THE INTEGRITY OF AND MAKING THE REPAIRS OF EXISTING PAVEMENT, SIDEWALKS, PIPES, CONDUITS, CURBS, CABLES, ETC., WHETHER OR NOT SHOWN ON THE PLANS DAMAGED AS A RESULT OF THE CONTRACTORS OPERATIONS AND/OR THOSE OF HIS SUBCONTRACTORS, AND SHALL RESTORE THEM PROMPTLY AT NO ADDITIONAL EXPENSE TO THE OWNER OR THE CITY OF FORT PIERCE. CONTRACTOR SHALL REPORT ANY DAMAGE TO SIDEWALK, DRIVEWAY, ETC., PRIOR TO BEGINNING WORK IN ANY AREA.

27. ALL DRAINAGE PIPES SHALL BE APPROVED BY CITY OF FORT PIERCE ENGINEERING DEPARTMENT. THE CONTRACTOR SHALL CONSTRUCT A FILTER FABRIC JACKET AT ALL PROPOSED STORM SEWER JOINTS AS PER FDOT INDEX 280. COST OF FILTER FABRIC JACKET SHALL BE INCLUDED IN UNIT PIPE COSTS.

28. EXISTING DRAINAGE STRUCTURES AND CULVERTS ARE TO REMAIN UNLESS OTHERWISE NOTED.

29. NO EXISTING BASE MATERIAL REMOVED IN EXCAVATION SHALL BE REUSED AS PROPOSED BASE MATERIAL.

30. STAGING AND MATERIAL STORAGE SHALL NOT BE CONDUCTED ON ABUTTING PRIVATE PROPERTY WITHOUT WRITTEN APPROVAL FROM THE OWNER. STAGING AND STORAGE SHALL BE CONDUCTED WITHIN PUBLIC R/W AND/OR CONSTRUCTION EASEMENTS (ACCESS LICENSE AGREEMENTS).

31. EXISTING UTILITY CONTACT INFORMATION:

UTILITY COMPANY	CONTACT	PHONE NUMBER	ADDRESS
AT&T	MARK GUTIERREZ	772-460-4443	2021 S MILITARY TRAIL, WEST PALM BEACH, FL 33415
COMCAST CABLE	ANTHONY SPRINGSTEEL	954-534-7484	2501 SW 145 AVE. MIRAMAR, FL 33027
FLORIDA GAS TRANSMISSION - FORT PIERCE	JOSEPH SANCHEZ	407-838-7171	2405 LUCIEN WAY, STE 200 MAITLAND, FL 32751
FLORIDA POWER AND LIGHT	ROB MORRIS	772-223-4215	4406 SW CARGO WAY, PALM CITY, FL 34990
FORT PIERCE UTILITY AUTHORITY	BO HUTCHINSON	772-466-1600	1701 S 37TH ST FORT PIERCE, FL 34947

32. EROSION CONTROL MEASURES SHALL BE TAKEN BY CONTRACTOR DURING CONSTRUCTION AS PER FDOT STANDARDS:

A. SILT FENCE SHALL BE INSTALLED ALONG THE ENTIRE PERIMETER OF THE PROJECT ADJACENT TO ANY SOIL DISTURBING ACTIVITIES.

B. ALL DRAINAGE STRUCTURES ARE TO BE PROTECTED DURING CONSTRUCTION PER FDOT STANDARDS.

C. ALL FENCING, GRADING, SIGNING AND SODDING SHALL BE MAINTAINED DURING THE CONTRACT LIFE. ALL DAMAGED WORK SHALL BE RESTORED AT NO COST TO THE CITY.

33. ALL EXISTING MAILBOXES WITHIN LIMITS OF CONSTRUCTION SHALL BE RELOCATED IN ACCORDANCE WITH CITY AND POSTAL CODES.

34. NON-STRUCTURAL CONCRETE UTILIZED IN CURB AND GUTTER, SIDEWALK AND URBAN FLARED TURNOUT CONSTRUCTION SHALL CONSIST OF 3000 PSI FIBER REINFORCED MIX.

REVISIONS					
DATE	BY	DESCRIPTION	DATE	BY	DESCRIPTION

Kimley»Horn
BRIAN A. GOOD, P.E.
P.E. LICENSE NUMBER 56939
445 24th STREET, SUITE 200
VERO BEACH, FL 32960
(772) 794-4100
CERTIFICATE OF AUTHORIZATION: 00000696

CITY OF FORT PIERCE

SURFSIDE NEIGHBORHOOD ROADWAY IMPROVEMENTS

GENERAL NOTES

SHEET NO. 2

SUMMARY OF PAY ITEMS

PAY ITEM NO.	DESCRIPTION	UNIT	PROJECT QUANTITY
	BAYSHORE DRIVE		
101-1A	MOBILIZATION/DEMOBILIZATION	LS	1
102-1A	MAINTENANCE OF TRAFFIC	LS	1
104-2A	PREVENTION, CONTROL & ABATEMENT OF EROSION AND WATER POLLUTION	LS	1
110-1-1A	SELECT CLEARING & GRUBBING	LS	1
110-7-1A	MAILBOX (F & I)	EA	1
110-7-2A	MAILBOX (REMOVE & RESET)	EA	22
120-1A	EXCAVATION	LS	1
285-7-01A	OPTIONAL BASE GROUP 1 (4" COQUINA)	SY	616
327-70-6A	MILLING EXIST ASPH PAVT (1.5" AVG DEPTH)	SY	2,857
334-1-13A1	SUPERPAVE ASPHALTIC CONCRETE (TRC) (SP-9.5) (VAR., 1.5" MIN.)	TN	436
334-1-13A2	SUPERPAVE ASPHALTIC CONCRETE (TRC) (B-12.5) (10.5")	TN	64
425-11A	MODIFY EXISTING DRAINAGE STRUCTURE	EA	1
520-3A	VALLEY GUTTER - CONC	LF	2,310
522-2A	DRIVEWAY APRON CONC (6" THICK w/ FIBER MESH) (3,000 PSI MIN.)	SY	512
522-21A	DRIVEWAY APRON CONC W/ CONCRETE STAIN COATING (6" THICK w/ FIBER MESH) (3,000 PSI MIN.)	SY	53
522-22A	DRIVEWAY APRON CONC W/ TEXTURED SKIP TROWEL FINISH (6" THICK w/ FIBER MESH) (3,000 PSI MIN.)	SY	18
522-23A	DRIVEWAY APRON CONC W/ TEXTURED FINISH W/ STENCILED BORDER (6" THICK w/ FIBER MESH) (3,000 PSI MIN.)	SY	48
522-24A	DRIVEWAY APRON CONC W/ STANDARD MASONRY PAVERS - ASSORTED SIZES (6" THICK w/ FIBER MESH) (3,000 PSI MIN.)	SY	63
522-26A	DRIVEWAY APRON CONC W/ THIN MASONRY PAVERS (6" THICK w/ FIBER MESH) (3,000 PSI MIN.)	SY	41
570-1-2A	PERFORMANCE TURF SOD (FLORATAM)	SY	2,957
700-1-11	SINGLE POST SIGN (F&I) (<12 SF)	EA	2
711-11-125A	THERMOPLASTIC TRAFFIC STRIPING (24" WHITE)	LF	29
711-16-211A	THERMOPLASTIC TRAFFIC STRIPING (6" YELLOW)	LF	865

PAY ITEM NO.	DESCRIPTION	UNIT	PROJECT QUANTITY
	RIO VISTA DRIVE		
101-1B	MOBILIZATION/DEMOBILIZATION	LS	1
102-1B	MAINTENANCE OF TRAFFIC	LS	1
104-2B	PREVENTION, CONTROL & ABATEMENT OF EROSION AND WATER POLLUTION	LS	1
110-1-1B	SELECT CLEARING & GRUBBING	LS	1
110-7-1B	MAILBOX (F & I)	EA	4
110-7-2B	MAILBOX (REMOVE & RESET)	EA	35
120-1B	EXCAVATION	LS	1
285-7-01B	OPTIONAL BASE GROUP 1 (4" COQUINA)	SY	1,043
327-70-1B	MILLING EXIST ASPH PAVT (1.0" AVG DEPTH)	SY	810
327-70-6B	MILLING EXIST ASPH PAVT (1.5" AVG DEPTH)	SY	3,004
334-1-13B1	SUPERPAVE ASPHALTIC CONCRETE (TRC) (SP-9.5) (VAR., 1.5" MIN.)	TN	831
334-1-13B2	SUPERPAVE ASPHALTIC CONCRETE (TRC) (B-12.5) (10.5")	TN	489
425-14-2	GRATE FOR EXISTING DRAINAGE STRUCTURE (REMOVE & REPLACE)	EA	5
425-17-01B	INLET VALLEY GUTTER	EA	4
430-174-118B	PIPE CULVERT, RCP, 18" ROUND	LF	18
443-70-4B	FRENCH DRAIN, 18" RCP	LF	422
520-1-10	CONCRETE CURB AND GUTTER (TYPE F)	LF	20
520-3B	VALLEY GUTTER - CONC	LF	3,794
522-2B	DRIVEWAY APRON CONC (6" THICK w/ FIBER MESH) (3,000 PSI MIN.)	SY	829.6
522-21B	DRIVEWAY APRON CONC W/ CONCRETE STAIN COATING (6" THICK w/ FIBER MESH) (3,000 PSI MIN.)	SY	133.8
522-23B	DRIVEWAY APRON CONC W/ TEXTURED FINISH W/ STENCILED BORDER (6" THICK w/ FIBER MESH) (3,000 PSI MIN.)	SY	20.3
522-24B	DRIVEWAY APRON CONC W/ STANDARD MASONRY PAVERS - ASSORTED SIZES (6" THICK w/ FIBER MESH) (3,000 PSI MIN.)	SY	323.7
522-25B	DRIVEWAY APRON CONC W/ STAMPED AND STAINED FINISH (6" THICK w/ FIBER MESH) (3,000 PSI MIN.)	SY	108.2
570-1-2B1	PERFORMANCE TURF SOD (FLORATAM)	SY	4,738
570-1-2B2	PERFORMANCE TURF SOD (BERMUDA)	SY	270
711-11-125B	THERMOPLASTIC TRAFFIC STRIPING (24" WHITE)	LF	52
711-16-211B	THERMOPLASTIC TRAFFIC STRIPING (6" YELLOW)	LF	150
1080-15B	WATER METER/ SERVICE (ADJUST)	EA	4

PAY ITEM FOOTNOTES

334-1-13X1
334-1-13X2 — THE COST OF THE TACK COAT SHALL BE INCLUDED IN THE UNIT PRICE OF ASPHALT.

522-2X
522-21X
522-22X
522-23X
522-24X
522-25X
522-26X — THE COST SHALL INCLUDE, BUT NOT LIMITED TO, COORDINATION WITH THE PROPERTY OWNER REGARDING DRIVEWAY RESTORATION.

1080-15B — COST TO INCLUDE ALL MATERIAL AND LABOR NECESSARY TO ADJUST WATER SERVICE TO ACCOMMODATE PROPOSED DRAINAGE IMPROVEMENTS.

REVISIONS

DATE	BY	DESCRIPTION	DATE	BY	DESCRIPTION

Kimley»Horn
BRIAN A. GOOD, P.E.
P.E. LICENSE NUMBER 56939
445 24th STREET, SUITE 200
VERO BEACH, FL 32960
(772) 794-4100
CERTIFICATE OF AUTHORIZATION: 00000696

CITY OF FORT PIERCE
SURFSIDE NEIGHBORHOOD ROADWAY IMPROVEMENTS

SUMMARY OF PAY ITEMS

SHEET NO. 3

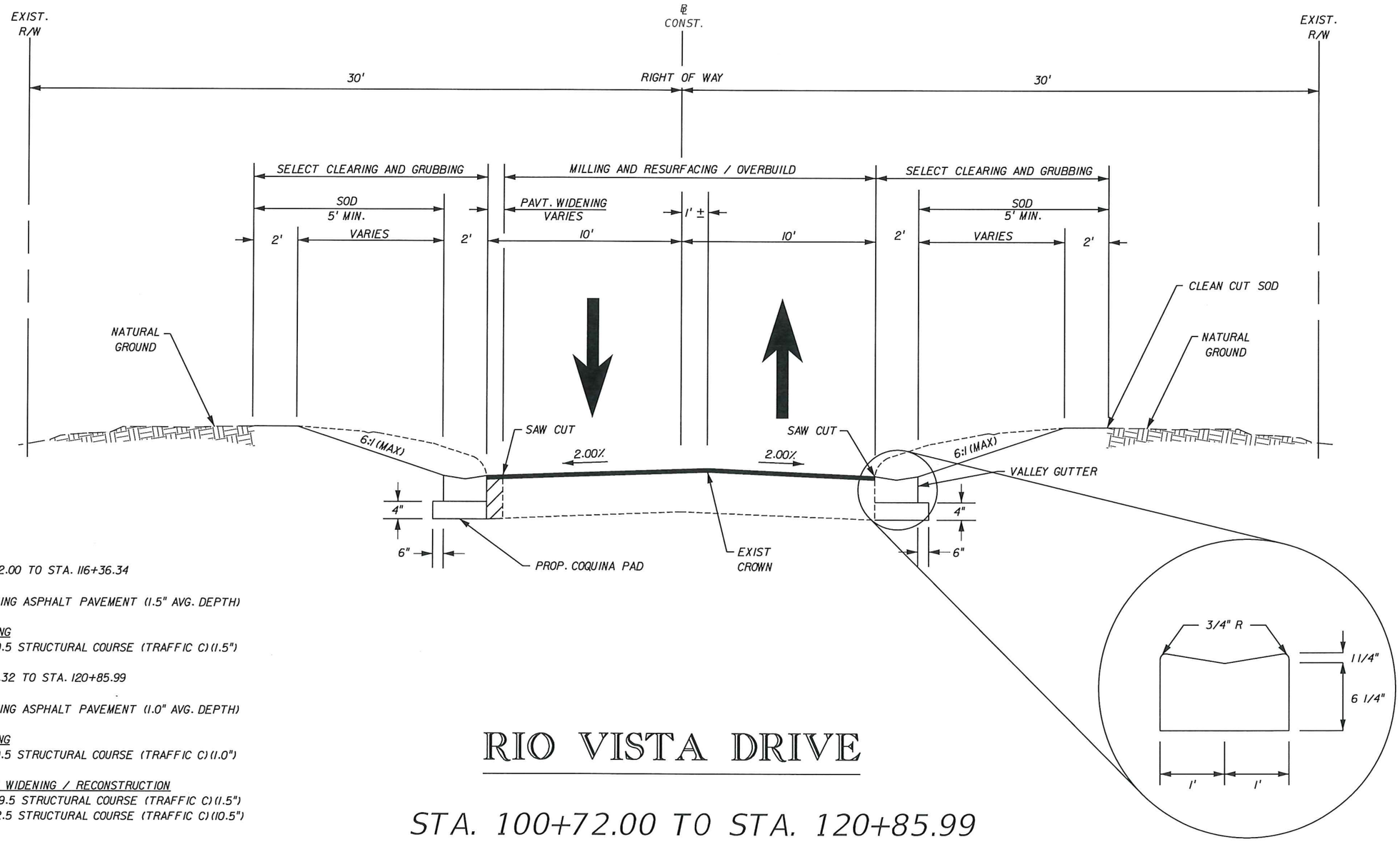

STA. 100+72.00 TO STA. 116+36.34

MILLING

MILL EXISTING ASPHALT PAVEMENT (1.5" AVG. DEPTH)

RESURFACING

TYPE SP-9.5 STRUCTURAL COURSE (TRAFFIC C) (1.5")

STA. 117+31.32 TO STA. 120+85.99

MILLING

MILL EXISTING ASPHALT PAVEMENT (1.0" AVG. DEPTH)

RESURFACING

TYPE SP-9.5 STRUCTURAL COURSE (TRAFFIC C) (1.0")

PAVEMENT WIDENING / RECONSTRUCTION

TYPE SP-9.5 STRUCTURAL COURSE (TRAFFIC C) (1.5")

TYPE B-12.5 STRUCTURAL COURSE (TRAFFIC C) (10.5")

POSTED SPEED = 30 MPH
DESIGN SPEED = 35 MPH

RIO VISTA DRIVE

STA. 100+72.00 TO STA. 120+85.99

VALLEY GUTTER DETAIL

REVISIONS					
DATE	BY	DESCRIPTION	DATE	BY	DESCRIPTION

Kimley»Horn
BRIAN A. GOOD, P.E.
P.E. LICENSE NUMBER 56939
445 24th STREET, SUITE 200
VERO BEACH, FL 32960
(772) 794-4100
CERTIFICATE OF AUTHORIZATION: 00000696

CITY OF FORT PIERCE

SURFSIDE NEIGHBORHOOD ROADWAY IMPROVEMENTS

RIO VISTA DRIVE TYPICAL SECTION

SHEET NO. 4

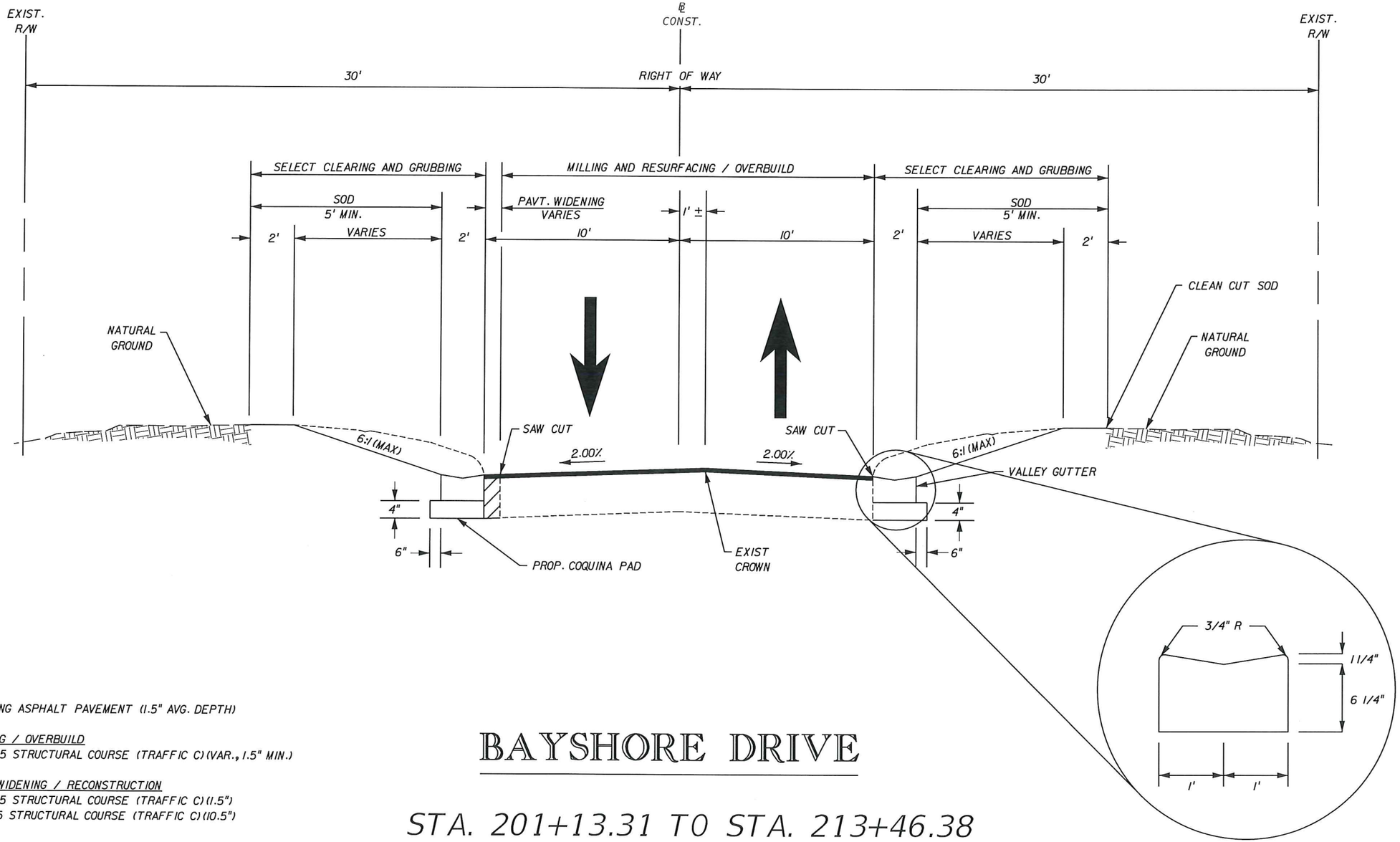

VALLEY GUTTER DETAIL

MILLING
MILL EXISTING ASPHALT PAVEMENT (1.5" AVG. DEPTH)

RESURFACING / OVERBUILD
TYPE SP-9.5 STRUCTURAL COURSE (TRAFFIC C) (VAR., 1.5" MIN.)

PAVEMENT WIDENING / RECONSTRUCTION
TYPE SP-9.5 STRUCTURAL COURSE (TRAFFIC C) (1.5")
TYPE B-12.5 STRUCTURAL COURSE (TRAFFIC C) (10.5")

POSTED SPEED = 30 MPH
DESIGN SPEED = 35 MPH

BAYSHORE DRIVE

STA. 201+13.31 TO STA. 213+46.38

REVISIONS					
DATE	BY	DESCRIPTION	DATE	BY	DESCRIPTION

Kimley»Horn
BRIAN A. GOOD, P.E.
P.E. LICENSE NUMBER 56939
445 24th STREET, SUITE 200
VERO BEACH, FL 32960
(772) 794-4100
CERTIFICATE OF AUTHORIZATION: 00000696

CITY OF FORT PIERCE
SURFSIDE NEIGHBORHOOD ROADWAY IMPROVEMENTS

BAYSHORE DRIVE TYPICAL SECTION

SHEET NO. 5

shawn.slngh 4/19/2018 11:24:01 AM K:\VRB_Roadway\047922017 - Surfside Rdwy Improv\Cadd\Rdwy\TYPSRD01 -

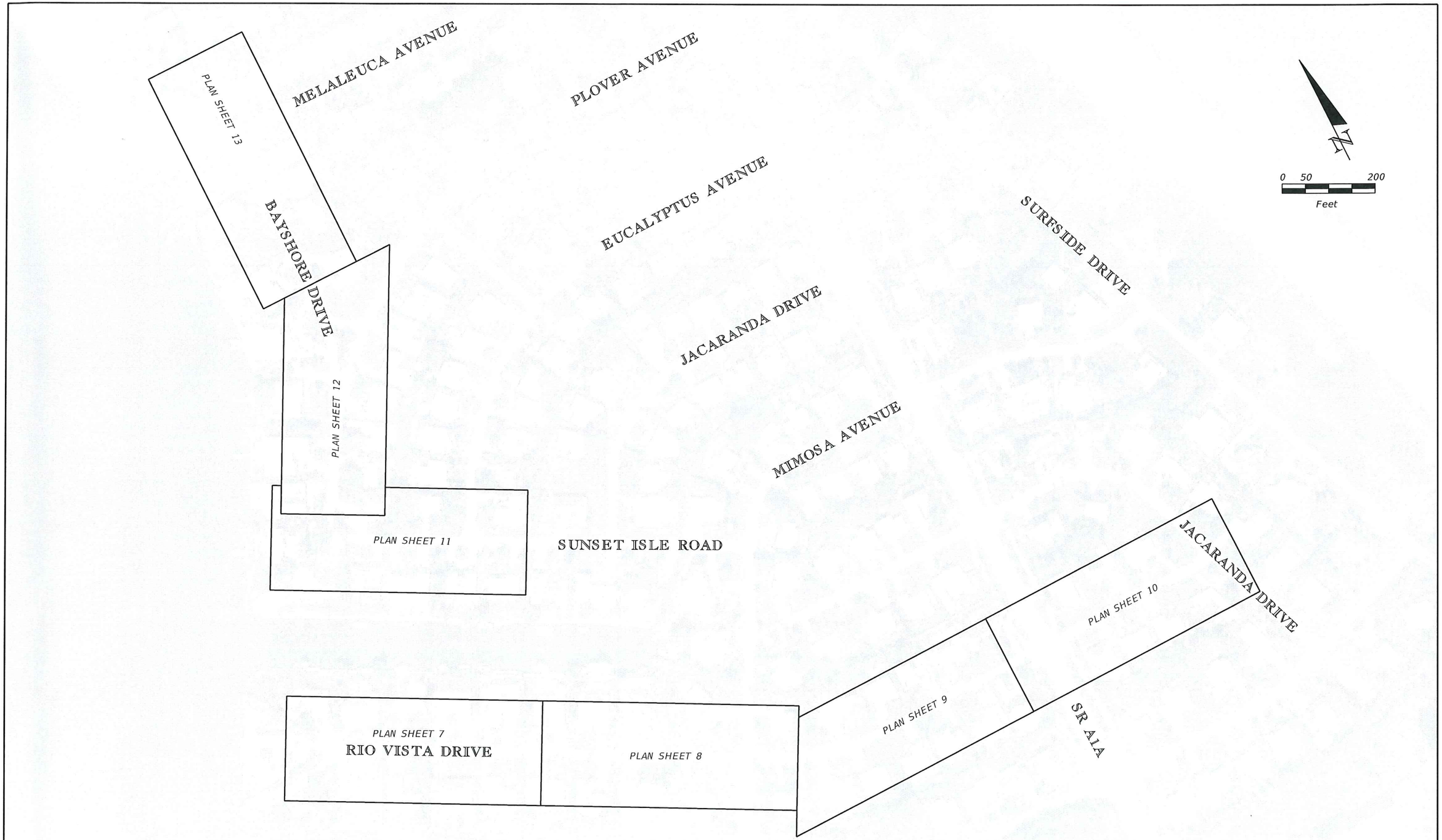

REVISIONS					
DATE	BY	DESCRIPTION	DATE	BY	DESCRIPTION

Kimley»Horn
BRIAN A. GOOD, P.E.
P.E. LICENSE NUMBER 56939
445 24th STREET, SUITE 200
VERO BEACH, FL 32960
(772) 794-4100
CERTIFICATE OF AUTHORIZATION: 00000696

CITY OF FORT PIERCE

SURFSIDE NEIGHBORHOOD ROADWAY IMPROVEMENTS

PLAN SHEET LAYOUT

SHEET NO. 6

shawn.singh 4/19/2018 11:24:02 AM K:\VRB_Roadway\047922017 - Surfside Rdwy Improv\Cadd\Rdwy\PLANS_ROAD

BEGIN RIO VISTA DRIVE MILLING & RESURFACING/OVERBUILD & PAVT. WIDENING
STA. 100+72.00

CONST. FLUME AS PER INDEX 283, TIE TO EXIST. DBI

RELOCATE EXIST. MAILBOX (TYP)

CONST. CONC. DRIVEWAY APRON REFER TO DETAIL (TYP)

EXIST. R/W

0 10 40
Feet

+64.97 +24.32 +81.10 +14.00 +41.11 +32.91 +93.59 +29.46 +76.47 +25.54

6" ACP WM

+18.98, 20.59' LT
EL. 3.01

40' R

+46.09, 10.00' LT
EL. 2.95

EL. 2.45

EL. 2.80

SAWCUT (TYP.)

CONST. VALLEY GUTTER

S 61° 59' 29" E

MILLING & RESURFACING /OVERBUILD LIMITS

101 102 103 104 105

+18.98, 20.59' RT
EL. 3.01

40' R

28' R

+46.09, 10.00' RT
EL. 2.95

8" VCP SS

EL. 2.65

EL. 2.80

PGL

℄ CONST.

EXIST. PALM TREE TO BE REMOVED

+80.87 +22.55 +06.42 +37.27 +30.93 +23.95 +30.07

EXIST. R/W

CONST. FLUME AS PER INDEX 283, TIE TO EXIST. DBI

12" PVC SE.INV.=2.16

12" PVC SE.INV.=2.07

CATCH BASIN GRATE=2.98 SW.INV.=1.36 W.WIER EL.=2.18 E.WIER EL.=2.16

MATCHLINE STA. 105+50.00

30' 30'

LEGEND

PAVEMENT WIDENING

(1) EXIST. LANDSCAPE BOULDER/ TIMBER PILINGS TO BE ADJUSTED, COST TO BE INCLUDED WITHIN CLEARING AND GRUBBING

(2) EXIST. MASONRY MAILBOX TO BE REPLACED WITH REPLACEMENT MAILBOX ASSEMBLY

BEGIN MILLING & RESURFACING/OVERBUILD & PAVT. WIDENING
BEGIN PROFILE GRADE LINE (PGL)
STA 100+72.00, EL 3.15

PROFILE GRADE LINE (PGL)

PI +46.00 EL. 3.15

PI +10.40 EL. 3.00

PI +76.70 EL. 3.53

(+) 0.000% (-) 0.230% (-) 0.230% (+) 0.200% (+) 0.200% (-) 0.200%

EXIST GRADE AT ℄ CONST.

8 6 4 2 0 -2 -4 -6

SCALE HOR: 1" = 40'
VER: 1" = 4'

3.91 2.83 3.15 2.98 3.14 2.94 3.03 3.05 3.08 3.03 3.18 2.95 3.28 3.05 3.38 3.03 3.48 2.94 3.49 2.92

101+00 102+00 103+00 104+00 105+00

REVISIONS					
DATE	BY	DESCRIPTION	DATE	BY	DESCRIPTION

Kimley»Horn
BRIAN A. GOOD, P.E.
P.E. LICENSE NUMBER 56939
445 24th STREET, SUITE 200
VERO BEACH, FL 32960
(772) 794-4100
CERTIFICATE OF AUTHORIZATION: 00000696

CITY OF FORT PIERCE

SURFSIDE NEIGHBORHOOD ROADWAY IMPROVEMENTS

RIO VISTA DRIVE PLAN & PROFILE

SHEET NO. 7

shawn.singh 4/19/2018 11:24:55 AM K:\VRB_Roadway\047922017 - Surfside Rdwy Improv\Cadd\Rdwy\PLANS_ROAD

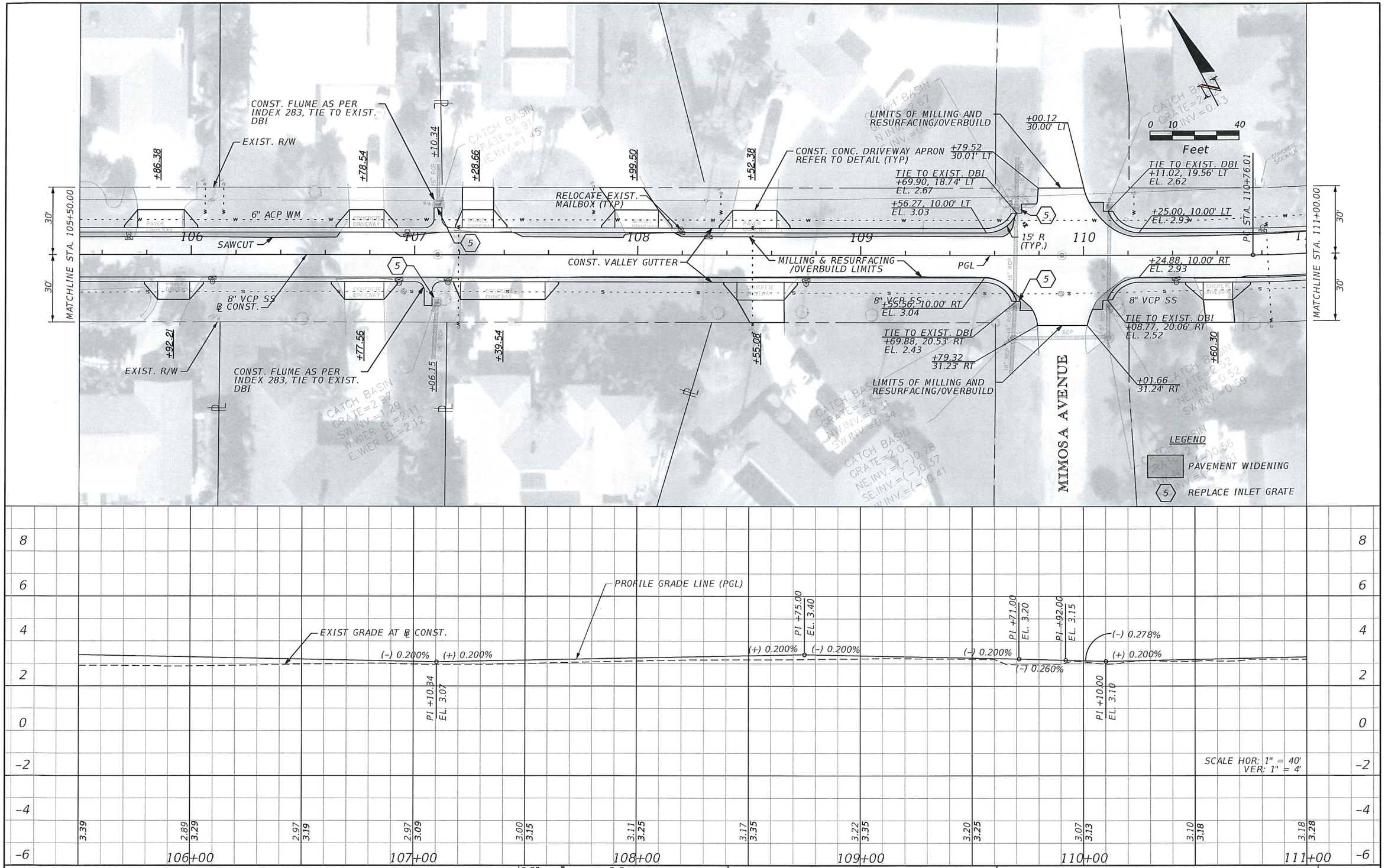

REVISIONS					
DATE	BY	DESCRIPTION	DATE	BY	DESCRIPTION

Kimley»Horn
BRIAN A. GOOD, P.E.
P.E. LICENSE NUMBER 56939
445 24th STREET, SUITE 200
VERO BEACH, FL 32960
(772) 794-4100
CERTIFICATE OF AUTHORIZATION: 00000696

CITY OF FORT PIERCE

SURFSIDE NEIGHBORHOOD ROADWAY IMPROVEMENTS

RIO VISTA DRIVE PLAN & PROFILE

SHEET NO. 8

shawn.singh 4/19/2018 11:25:04 AM K:\VRB_Roadway\047922017 - Surfside Rdwy Improv\Cadd\Rdwy\PLANS_ROAD

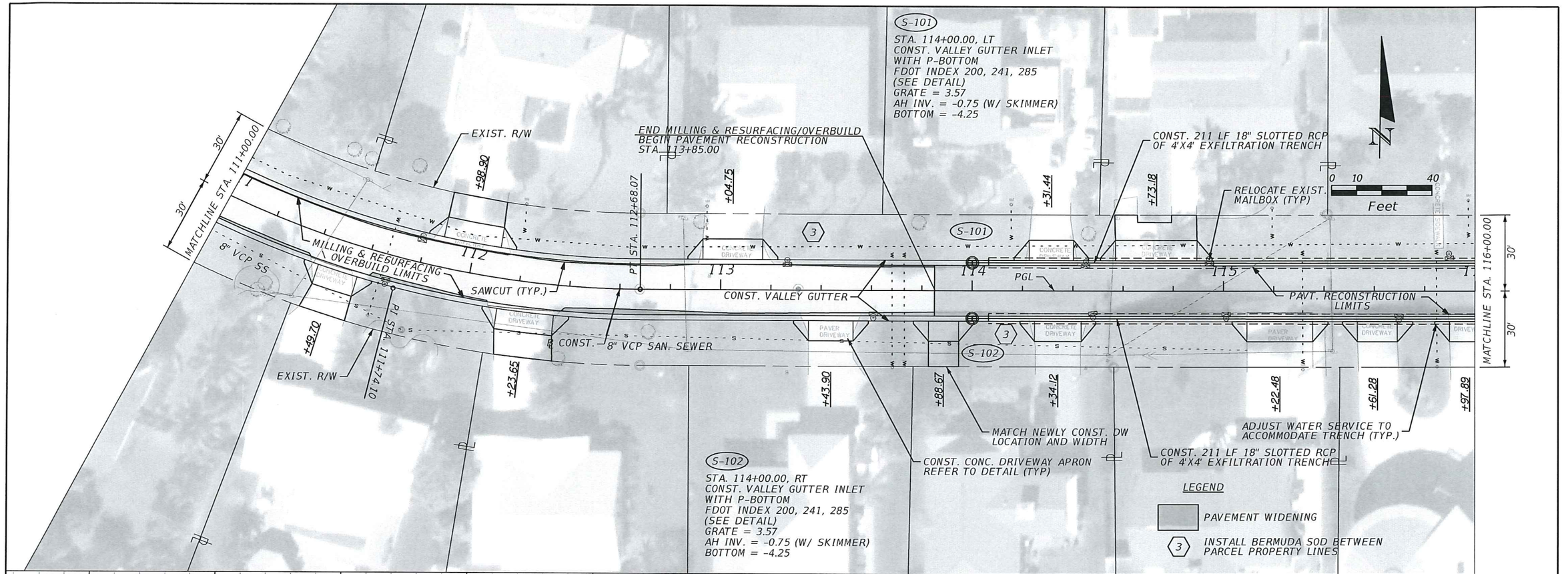

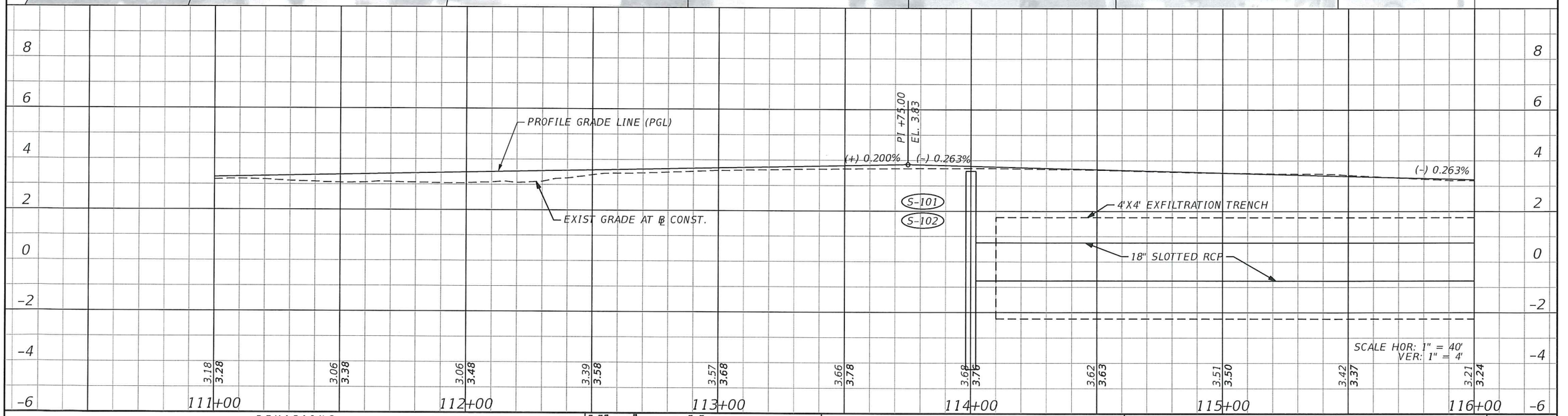

REVISIONS					
DATE	BY	DESCRIPTION	DATE	BY	DESCRIPTION

Kimley»Horn
BRIAN A. GOOD, P.E.
P.E. LICENSE NUMBER 56939
445 24th STREET, SUITE 200
VERO BEACH, FL 32960
(772) 794-4100
CERTIFICATE OF AUTHORIZATION: 00000696

CITY OF FORT PIERCE

SURFSIDE NEIGHBORHOOD ROADWAY IMPROVEMENTS

RIO VISTA DRIVE PLAN & PROFILE

SHEET NO. 9

shawn.singh 4/19/2018 11:25:12 AM K:\VRB_Roadway\047922017 - Surfside Rdwy Improv\Cadd\Rdwy\PLANS_ROAD

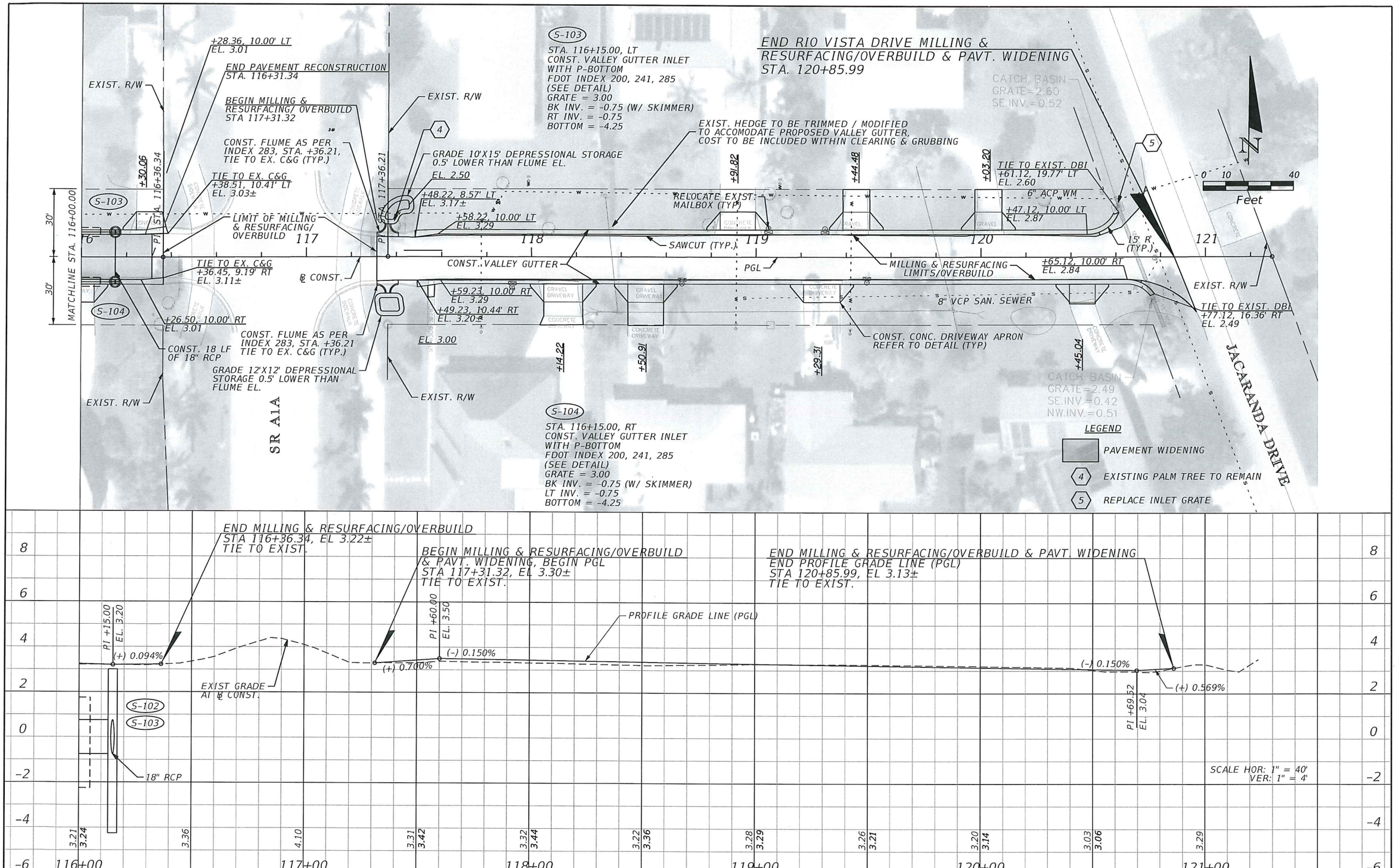

REVISIONS					
DATE	BY	DESCRIPTION	DATE	BY	DESCRIPTION

Kimley»Horn
BRIAN A. GOOD, P.E.
P.E. LICENSE NUMBER 56939
445 24th STREET, SUITE 200
VERO BEACH, FL 32960
(772) 794-4100
CERTIFICATE OF AUTHORIZATION: 00000696

CITY OF FORT PIERCE

SURFSIDE NEIGHBORHOOD ROADWAY IMPROVEMENTS

RIO VISTA DRIVE PLAN & PROFILE

SHEET NO. 10

shawn.singh 4/19/2018 11:25:20 AM K:\VRB_Roadway\047922017 - Surfside Rdwy Improv\Cadd\Rdwy\PLANS_ROAD

BEGIN SUNSET ISLE ROAD MILLING & RESURFACING/OVERBUILD & PAVT. WIDENING
STA. 201+13.31

LEGEND
PAVEMENT WIDENING

0 10 40
Feet

CONST. CONC. DRIVEWAY APRON REFER TO DETAIL (TYP)

TIE TO EXIST. DBI
+83.35, 19.64' LT
EL. 2.77

CONST. FLUME AS PER INDEX 283, TIE TO EXIST. DBI

EXIST. R/W

+14.74
+69.21
+32.35
+68.01
+23.74
+38.11

RELOCATE EXIST. MAILBOX (TYP)

EL. 2.52

+52.44
P1 STA. 204+64.88

+13.14
8.95' LT
6" ACP WM

201
202
203
204

+93.34, 10.00' LT
EL. 3.32

8" VCP SAN. SEWER

EL. 3.21

MILLING & RESURFACING/ OVERBUILD LIMITS

CONST. VALLEY GUTTER
N 61° 52' 25" W

PGL

10' R (TYP.)

℄ CONST.

+93.94, 10.00' RT
EL. 3.32

P1 STA. 204+25.11

+82.73

P1 STA. 204+87.11

+13.50
10.35' RT

TIE TO EXIST. DBI
+83.94, 20.51' RT
EL. 3.23

+70.42
+01.80

EXIST. R/W
+57.14
35.48' RT

+77.25
35.22' RT

LIMIT OF MILLING & RESURFACING

6" ACP WM

EUCALYPTUS AVENUE

EXIST. R/W

MATCHLINE STA. 205+00.00
30' 30'

PROFILE GRADE LINE (PGL)

PI +48.84
EL. 3.47
PI +73.42
EL. 3.53
PI +95.01
EL. 3.78
PI +86.00
EL. 3.50
PI +40.02
EL. 3.41

(+) 1.689%
(+) 0.250%
(+) 0.250%
(+) 0.250%
(-) 0.250%
(-) 0.250%
(+) 0.250%
(-) 0.250%

EXIST GRADE AT ℄ CONST.

BEGIN MILLING & RESURFACING/OVERBUILD & PAVT. WIDENING
BEGIN PROFILE GRADE LINE (PGL)
STA 201+13.31, EL 3.35±
TIE TO EXIST.

SCALE HOR: 1" = 40'
VER: 1" = 4'

6 4 2 0 -2 -4 -6 -8

3.40 3.48 | 3.36 3.54 | 3.35 3.66 | 3.45 3.76 | 3.37 3.64 | 3.30 3.51 | 3.40 3.44 | 3.49 3.56

202+00 203+00 204+00 205+00

REVISIONS					
DATE	BY	DESCRIPTION	DATE	BY	DESCRIPTION

Kimley»Horn
BRIAN A. GOOD, P.E.
P.E. LICENSE NUMBER 56939
445 24th STREET, SUITE 200
VERO BEACH, FL 32960
(772) 794-4100
CERTIFICATE OF AUTHORIZATION: 00000696

CITY OF FORT PIERCE

SURFSIDE NEIGHBORHOOD ROADWAY IMPROVEMENTS

BAYSHORE DRIVE PLAN & PROFILE

SHEET NO. 11

shawn.singh 4/19/2018 11:25:29 AM K:\VRB_Roadway\047922017 - Surfside Rdwy Improv\Cadd\Rdwy\PLANS_ROAD

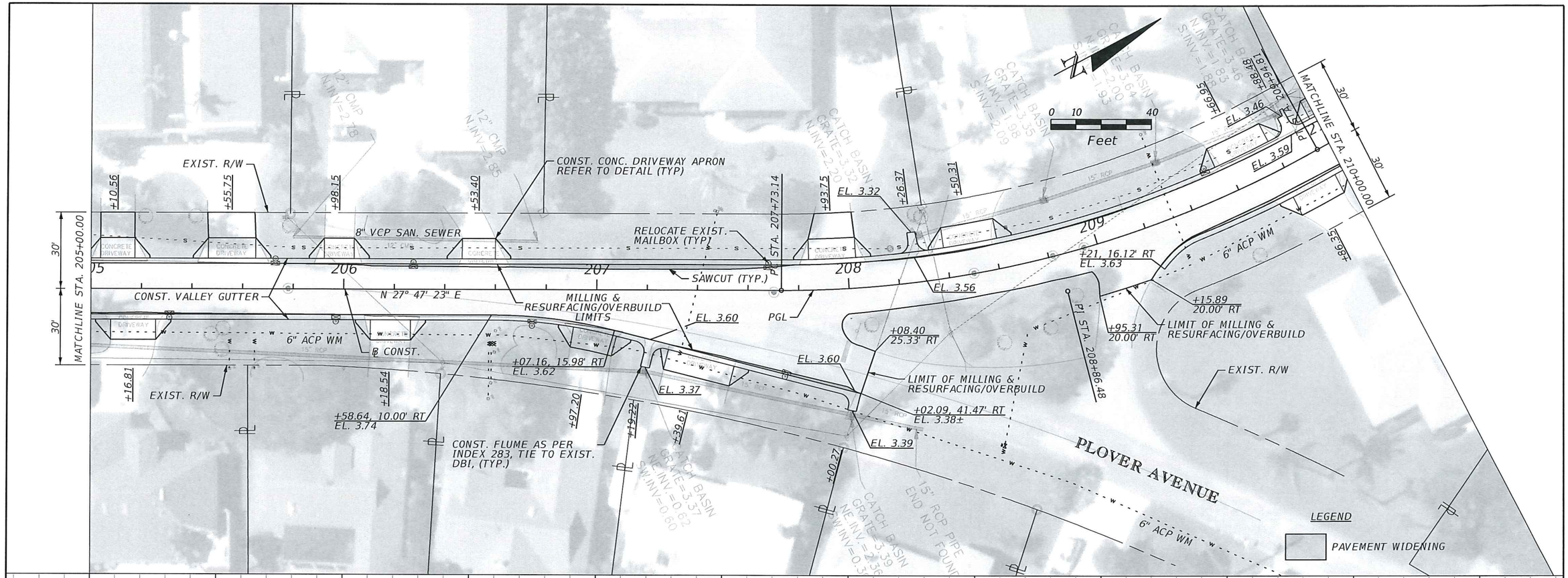

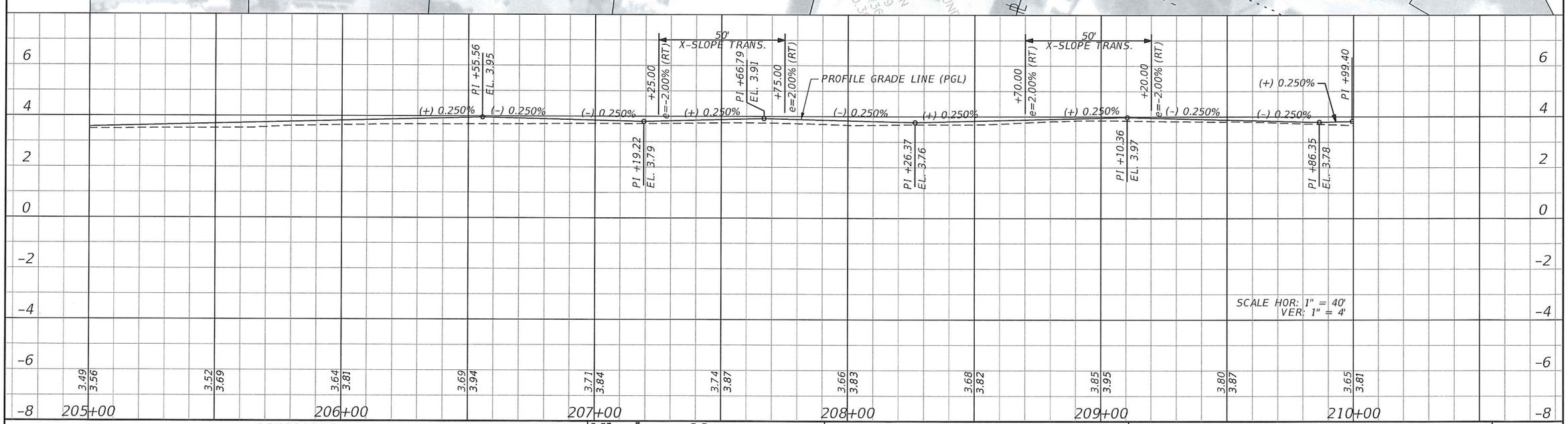

REVISIONS					
DATE	BY	DESCRIPTION	DATE	BY	DESCRIPTION

Kimley»Horn
BRIAN A. GOOD, P.E.
P.E. LICENSE NUMBER 56939
445 24th STREET, SUITE 200
VERO BEACH, FL 32960
(772) 794-4100
CERTIFICATE OF AUTHORIZATION: 00000696

CITY OF FORT PIERCE

SURFSIDE NEIGHBORHOOD ROADWAY IMPROVEMENTS

BAYSHORE DRIVE PLAN & PROFILE

SHEET NO. 12

shawn.singh 4/19/2018 11:25:38 AM K:\VRB_Roadway\047922017 - Surfside Rdwy Improv\Cadd\Rdwy\PLANS_ROAD

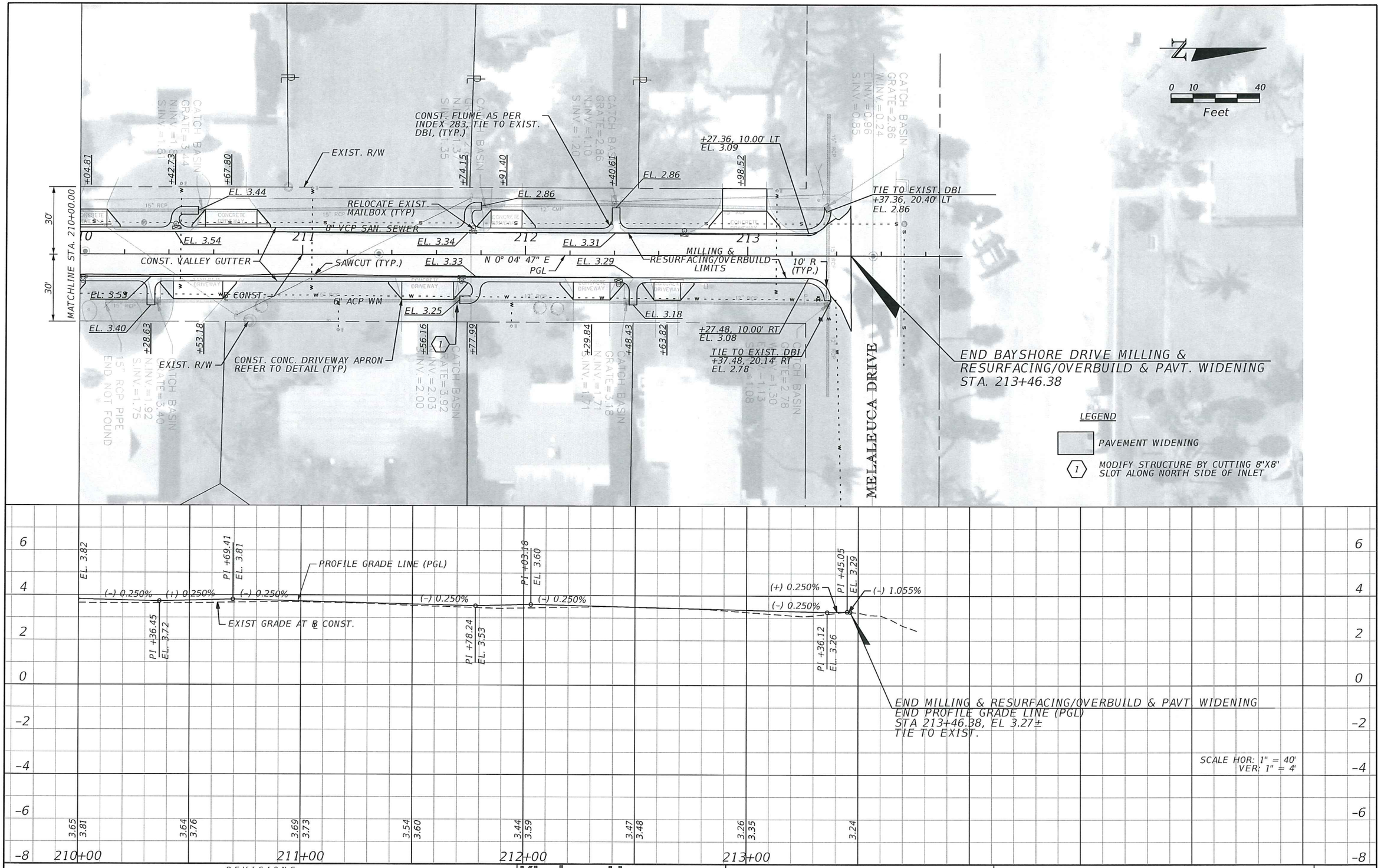

REVISIONS					
DATE	BY	DESCRIPTION	DATE	BY	DESCRIPTION

Kimley»Horn
BRIAN A. GOOD, P.E.
P.E. LICENSE NUMBER 56939
445 24th STREET, SUITE 200
VERO BEACH, FL 32960
(772) 794-4100
CERTIFICATE OF AUTHORIZATION: 00000696

CITY OF FORT PIERCE

SURFSIDE NEIGHBORHOOD ROADWAY IMPROVEMENTS

BAYSHORE DRIVE PLAN & PROFILE

SHEET NO. 13

shawn.singh 4/19/2018 11:25:46 AM K:\VRB_Roadway\047922017 - Surfside Rdwy Improv\Cadd\Rdwy\PLANS_ROAD

visit us at: www.mailboxes.com

Standard Mailbox Posts

STANDARD MAILBOX POSTS
FOR RURAL AND TOWNHOUSE MAILBOXES

Made of heavy duty aluminum, Salsbury standard mailbox posts accommodate rural mailboxes (see pages 78-79) and townhouse mailboxes (see pages 78-79) and are available in a bolt mounted style (#4865) and an in-ground mounted style (#4895). Standard mailbox posts feature a durable powder coated finish available in five (5) contemporary colors.

Volume Discount Pricing Available On-Line!



Standard post (#4895) with rural mailbox (#4850) (see pages 72-73) and custom numbers / letters (see page 107) displayed

order rural mailboxes (see pages 72-77) and townhouse mailboxes (see pages 78-79) separately



DESCRIPTION	DESCRIPTION
4865[1] - Standard Post - Bolt mounted	4895[1] - Standard Post - In-ground mounted
UNIT SIZE Post: 3-1/2" W x 42" H x 3-1/2" D Top & base: 6" W x 12" D	UNIT SIZE Post: 3-1/2" W x 60" H x 3-1/2" D Top: 6" W x 12" D
WEIGHT 20 lbs.	WEIGHT 25 lbs.
PRICE $100.00	PRICE $100.00

[1] Specify: black, beige, green, white, bronze

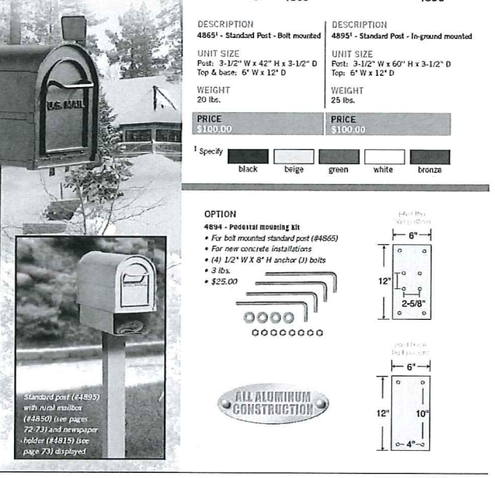

Standard post (#4895) with rural mailbox (#4850) (see pages 72-73) and newspaper holder (#4815) (see page 73) displayed

OPTION
4894 - Pedestal mounting kit
- For bolt mounted standard post (#4865)
- For new concrete installations
- (4) 1/2" W X 8" H anchor (1) bolts
- 3 lbs.
- $25.00

ALL ALUMINUM CONSTRUCTION

visit us at: www.mailboxes.com

Heavy Duty Rural Mailboxes

HEAVY DUTY RURAL MAILBOXES
U.S.P.S. APPROVED

Made entirely of aluminum, Salsbury U.S.P.S. approved 4800 series heavy duty rural mailboxes feature a 1/8" thick extruded aluminum body and a 1/8" thick die cast aluminum front door and rear cover. Heavy duty rural mailboxes also feature a durable powder coated finish available in four (4) contemporary colors and include an adjustable red signal flag and a magnetic door catch. The die cast door is attached to the body with a full width stainless steel hinge allowing for smooth operation. Heavy duty rural mailboxes can be mounted on standard, classic, decorative or deluxe mailbox posts (see pages 80-85), spreaders (see page 81) or a base of your choice. Rural mailboxes are approved for U.S.P.S. curbside mail delivery.

Volume Discount Pricing Available On-Line!



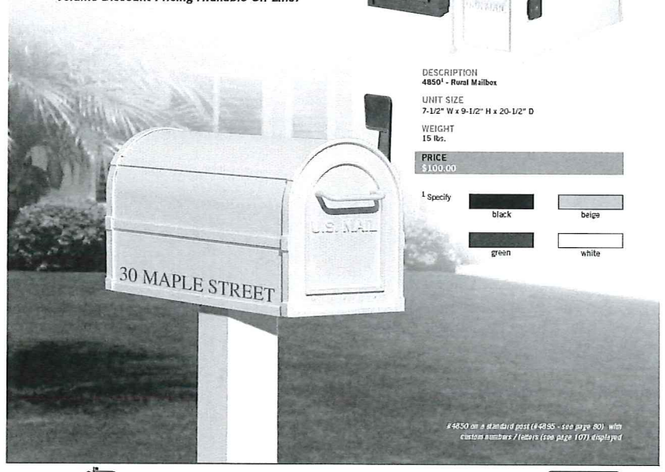

#4850 on a standard post (#4895 - see page 80), with custom numbers / letters (see page 107) displayed

DESCRIPTION
4850[1] - Rural Mailbox

UNIT SIZE
7-1/2" W x 9-1/2" H x 20-1/2" D

WEIGHT
15 lbs.

PRICE
$100.00

[1] Specify: black, beige, green, white

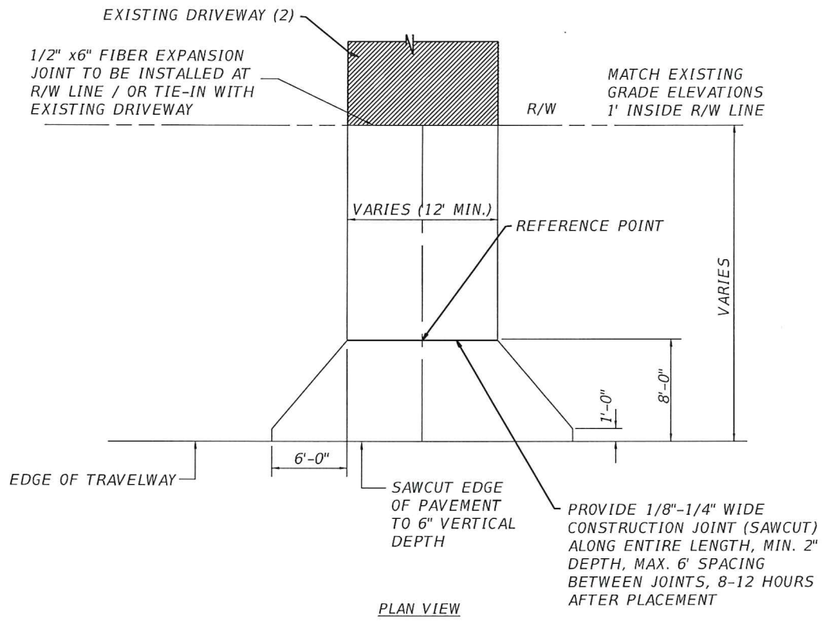

PLAN VIEW

PROPOSED CONCRETE DRIVEWAY DETAIL

(EXISTING ELEVATION AT PROPOSED R/W > ELEVATION OF EDGE OF PROPOSED PAVEMENT)

NOTES:
1. SURFACE SPECIFICATIONS:
   A. CONCRETE DRIVEWAY EXTENDING INTO RIGHT-OF-WAY OR PUBLIC EASEMENT SHALL BE A MINIMUM OF 6" THICK, 3000 P.S.I. CONCRETE INCORPORATING A FLARE AS SHOWN IN THE PLAN VIEW. CONCRETE WITH FIBER MESH @ 1.5LB/CY. SUBGRADE SHALL BE 12" SAND OR OTHER APPROVED MATERIAL COMPACTED TO 98% AASHTO T-180 MAXIMUM DENSITY.
2. EXISTING HARDSCAPE IMPROVED DRIVEWAY;
   THE CITY DESIRES TO MATCH EXISTING HARDSCAPE IMPROVED DRIVEWAYS (IE. PAVERS, STAMPED CONCRETE, EPOXY BONDED AGGREGATE, SPECIAL AGGREGATE MIX, ETC. WHEN RECONSTRUCTING THESE DRIVEWAYS WITHIN THE CITY RIGHT-OF-WAY.
3. RIGHT-OF-WAY RESTORATION;
   A. REQUIREMENT: AS GOOD OR BETTER THAN CONDITION PRIOR TO CONSTRUCTION (INCLUDES ADJACENT AREAS). USE SOD AS NECESSARY. SOD MUST BE PLACED 1" BELOW THE ELEVATION AT EDGE OF PAVEMENT. ANY SOD PLACED ABOVE EDGE OF PAVEMENT ELEVATION WILL NOT BE APPROVED AT FINAL INSPECTION.
   B. DRAINAGE: DRAINAGE DITCHES DISTURBED DURING CONSTRUCTION SHALL BE GRADED IN SUCH A MANNER AS TO PROVIDE FOR RESTORATION OF THE FLOW LINE. THE CITY WILL NOT APPROVE THE FINAL INSPECTION IF THE PLACEMENT OF SOD PARTIALLY BLOCKS THE DRIVEWAY CULVERT. THE TOP OF THE SOD MUST MATCH THE INVERT OF THE CULVERT.

REVISIONS					
DATE	BY	DESCRIPTION	DATE	BY	DESCRIPTION

Kimley»Horn
BRIAN A. GOOD, P.E.
P.E. LICENSE NUMBER 56939
445 24th STREET, SUITE 200
VERO BEACH, FL 32960
(772) 794-4100
CERTIFICATE OF AUTHORIZATION: 00000696

CITY OF FORT PIERCE

SURFSIDE NEIGHBORHOOD ROADWAY IMPROVEMENTS

MISCELLANEOUS DETAILS

SHEET NO. 14

shawn.singh 4/19/2018 11:25:47 AM K:\VRB_Roadway\047922017 - Surfside Rdwy Improv\Cadd\Rdwy\SPDTRD01.D

SUMMARY OF DRIVEWAYS

STATION	SIDE	WIDTH (FT)	CONCRETE AREA (SY) CONCRETE SIDEWALK (6" THICK) PLAN	FINAL	EXISTING DRIVEWAY MATERIAL	COMMENTS
RIO VISTA DRIVE						
100+64.97	LT	74.6	110.0		CONCRETE	
100+80.87	RT	17.7	18.6		CONCRETE	
101+22.55	RT	14.6	16.7		CONC. PAVER	522-24B
101+24.32	LT	16.2	34.3		CONC. PAVER	522-24B
101+81.10	LT	13.7	32.6		CONC. PAVER	522-24B
102+37.28	RT	29.6	63.8		STAMPED & STAINED CONCRETE	3' TRANS BK, 522-25B
102+41.11	LT	17.7	40.4		CONCRETE	
103+30.93	RT	19.6	23.4		STAINED CONCRETE	522-21B
103+32.91	LT	22.9	26.3		CONC. PAVER	522-24B
103+93.59	LT	21.0	24.7		CONC. PAVER	522-24B
104+23.95	RT	20.0	23.8		CONCRETE	
104+29.46	LT	14.2	18.6		CONC. PAVER	522-24B
104+76.47	LT	17.8	21.8		CONC. PAVER	522-24B
105+25.54	LT	15.2	19.5		CONC. PAVER	522-24B
105+30.07	RT	22.0	25.6		STAMPED & STAINED CONCRETE	522-25B
105+86.38	LT	20.8	24.5		CONC. PAVER	522-24B
105+92.21	RT	14.4	18.8		STAMPED & STAINED CONCRETE	522-25B
106+77.56	RT	17.7	21.7		CONCRETE	
106+78.54	LT	15.5	19.8		CONCRETE	
107+28.18	LT	14.0	32.5		GRAVEL	3' TRANS BK
107+39.54	RT	38.1	38.4		CONCRETE	3' TRANS BK
107+99.50	LT	19.6	45.3		GRAVEL	
108+52.38	LT	19.8	23.6		CONC. PAVER	522-24B
108+55.08	RT	21.2	45.3		CONCRETE	
110+60.30	RT	13.2	34.2		CONCRETE	
111+49.70	RT	16.4	40.0		CONCRETE	
111+98.90	LT	22.4	50.8		CONCRETE	

SUMMARY OF DRIVEWAYS (CONT.)

STATION	SIDE	WIDTH (FT)	CONCRETE AREA (SY) CONCRETE SIDEWALK (6" THICK) PLAN	FINAL	EXISTING DRIVEWAY MATERIAL	COMMENTS
RIO VISTA DRIVE						
112+23.65	RT	23.1	51.7		CONCRETE	
113+04.75	LT	23.8	27.2		CONCRETE	
113+43.90	RT	17.8	21.8		CONC. PAVER	522-24B
113+88.67	RT	12.0	30.0		CONC. PAVER	522-24B
114+31.44	LT	17.5	21.6		STAINED CONCRETE	522-21B
114+34.13	RT	18.6	22.2		STAINED CONCRETE	522-21B
114+73.18	LT	32.5	66.6		STAINED CONCRETE	522-21B
115+22.48	RT	26.2	29.3		CONC. PAVER	522-24B
115+61.23	RT	15.9	20.1		CONCRETE	
115+97.85	RT	15.9	20.1		CONCRETE	
116+30.06	LT	12	13.3		CONCRETE	NO TRANS AH
118+14.22	RT	17.3	41.2		GRAVEL	
118+50.91	RT	15.8	38.1		GRAVEL	
118+91.82	LT	15.8	20.0		CONCRETE	
119+29.31	RT	16.1	20.3		TEXTURED & STENCILED	522-23B
119+44.48	LT	12	30.0		GRAVEL	
120+03.20	LT	12	30.0		GRAVEL	
120+45.04	RT	12	17.1		CONCRETE	
UNFORSEEN			50.0			
SUB-TOTAL			1465.6			

SUMMARY OF DRIVEWAYS (CONT.)

STATION	SIDE	WIDTH (FT)	CONCRETE AREA (SY) CONCRETE SIDEWALK (6" THICK) PLAN	FINAL	EXISTING DRIVEWAY MATERIAL	COMMENTS
BAYSHORE DRIVE						
202+14.74	LT	14.1	18.5		CONC. PAVER	522-24A
202+69.21	LT	19.7	23.5		CONC. PAVER	522-24A
202+70.42	RT	22.9	26.4		STAINED CONCRETE	522-21A
203+32.35	LT	16.8	20.9		CONC. PAVER	522-24A
203+68.21	LT	19.4	23.2		THIN CONC. PAVER	522-26A
204+01.80	RT	16.1	20.3		CONCRETE	
204+23.74	LT	13.5	18.1		THIN CONC. PAVER	522-26A
204+52.44	LT	22.2	44.1		GRAVEL	
204+82.73	LT	12.1	29.1		GRAVEL	
205+10.42	LT	13.5	18.0		CONCRETE	
205+16.81	RT	17.9	21.9		CONCRETE	
205+55.75	LT	18.6	22.5		CONCRETE	
205+98.15	LT	11.8	16.4		CONCRETE	
206+18.54	RT	15.8	20.0		CONCRETE	
206+53.40	LT	13.2	17.7		CONCRETE	
206+97.20	RT	15.5	21.1		CONCRETE	
207+39.61	RT	26.8	28.2		CONCRETE	3' TRANS BK
207+93.75	RT	18.3	22.4		CONCRETE	
208+50.31	LT	20.9	24.8		CONCRETE	NEW HOME UNDER CONST.
209+66.95	LT	22.8	26.2		CONCRETE	NEW HOME UNDER CONST.
209+86.35	RT	17.7	22.6		TEXTURED & STENCILED	522-23A
210+04.81	LT	14.3	18.4		CONCRETE	
210+53.18	RT	22.1	25.7		TEXTURED & STENCILED	522-23A
210+67.80	LT	23.1	26.6		CONCRETE	
211+56.16	RT	23.2	26.5		STAINED CONCRETE	522-21A
211+91.40	LT	14	18.4		TEXTURED SKIP TROWEL FINISH	522-22A
212+29.84	RT	16.4	20.5		CONCRETE	
212+63.82	RT	12.0	18.0		CONCRETE	
212+98.52	LT	19.9	45.8		CONCRETE	
UNFORSEEN			50.0			
SUB-TOTAL			735.8			
TOTAL			2201.4			

REVISIONS					
DATE	BY	DESCRIPTION	DATE	BY	DESCRIPTION

Kimley»Horn
BRIAN A. GOOD, P.E.
P.E. LICENSE NUMBER 56939
445 24th STREET, SUITE 200
VERO BEACH, FL 32960
(772) 794-4100
CERTIFICATE OF AUTHORIZATION: 00000696

CITY OF FORT PIERCE

SURFSIDE NEIGHBORHOOD ROADWAY IMPROVEMENTS

SUMMARY OF TURNOUTS

SHEET NO. 15

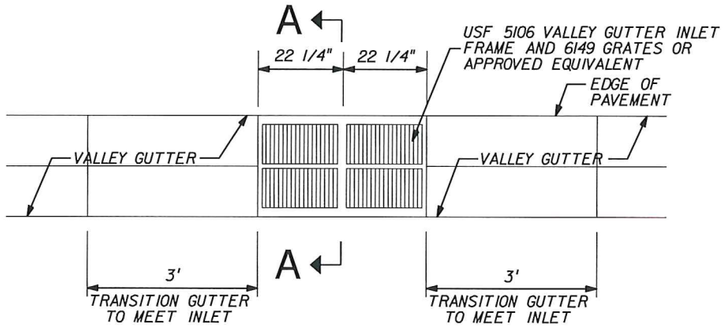

PLAN

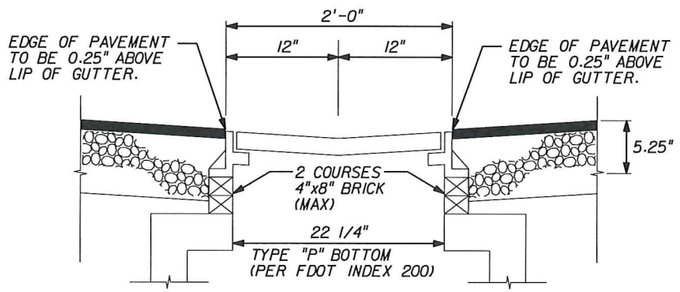

SECTION A-A

VALLEY GUTTER INLET DETAIL

N.T.S.

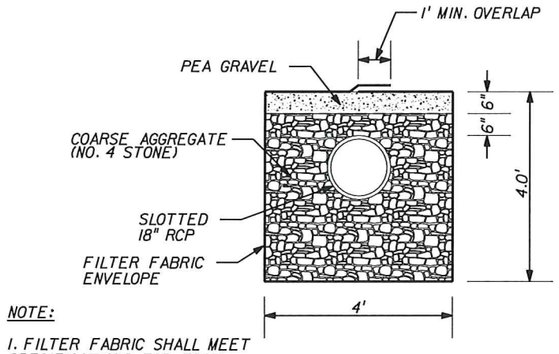

NOTE:

1. FILTER FABRIC SHALL MEET SPECIFICATIONS FOR FDOT TYPE D-3 FABRIC AS PER INDEX NO 199

℄ CULVERT

EXFILTRATION TRENCH CROSS SECTION A-A DETAIL

N.T.S.

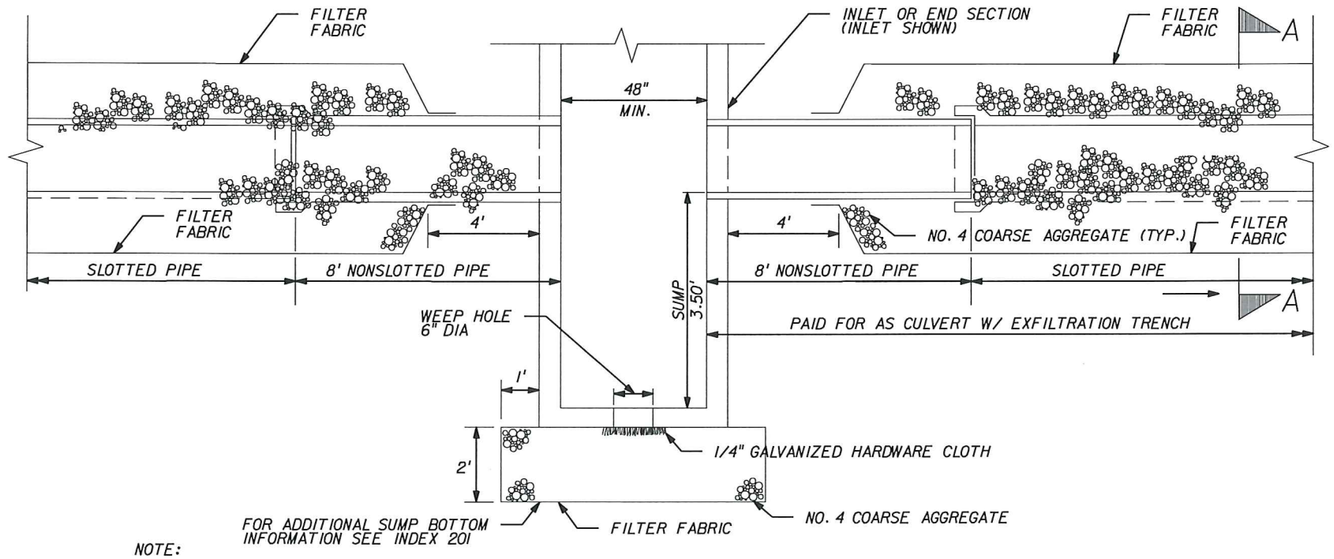

NOTE:

1. CONSTRUCT EXFILTRATION TRENCH FOLLOWING THESE DETAILS AND THE FRENCH DRAIN DETAILS OF THE FDOT DESIGN STANDARDS, INDEX NO. 285.

2. ALL MATERIAL AND LABOR COSTS ASSOCIATED WITH INSTALLATION OF COARSE AGGREGATE BEDDING TO BE INCLUDED WITHIN UNIT COST OF STRUCTURE. ALL PROPOSED DRAINAGE STRUCTURES SHALL HAVE COARSE AGGREGATE BEDDING CONSTRUCTED.

EXFILTRATION TRENCH PROFILE DETAIL

N.T.S.

REVISIONS					
DATE	BY	DESCRIPTION	DATE	BY	DESCRIPTION

Kimley»Horn
BRIAN A. GOOD, P.E.
P.E. LICENSE NUMBER 56939
445 24th STREET, SUITE 200
VERO BEACH, FL 32960
(772) 794-4100
CERTIFICATE OF AUTHORIZATION: 00000696

CITY OF FORT PIERCE

SURFSIDE NEIGHBORHOOD ROADWAY IMPROVEMENTS

DRAINAGE DETAILS

SHEET NO. 16

shawn.singh 4/19/2018 11:25:54 AM K:\VRB_Roadway\047922017 - Surfside Rdwy Improv\Cadd\Rdwy\SPDTDR01.D

Regular Exc.		Embankment	
A	V	A	V

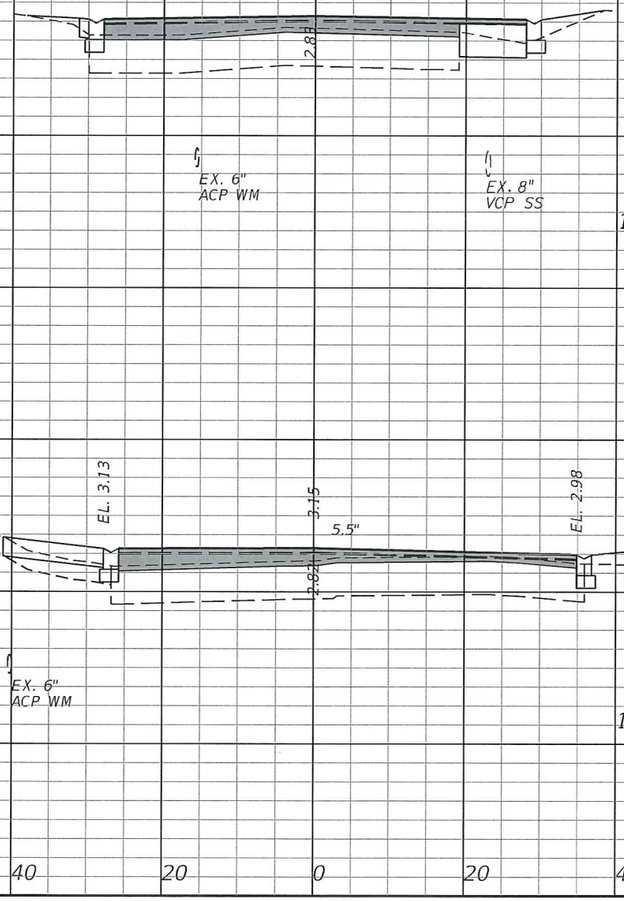

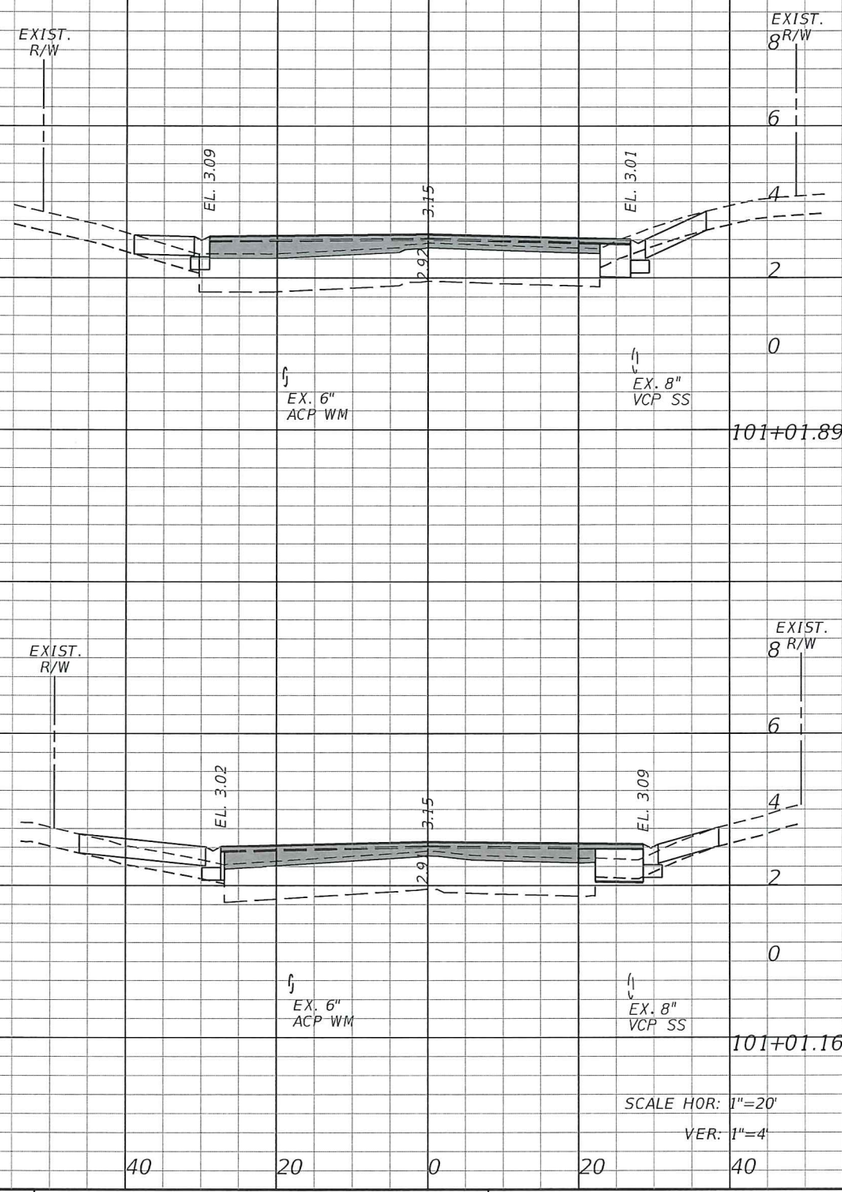

Regular Exc.		Embankment	
A	V	A	V

SCALE HOR: 1"=20'
VER: 1"=4'

REVISIONS

DATE	BY	DESCRIPTION	DATE	BY	DESCRIPTION

Kimley»Horn
BRIAN A. GOOD, P.E.
P.E. LICENSE NUMBER 56939
445 24th STREET, SUITE 200
VERO BEACH, FL 32960
(772) 794-4100
CERTIFICATE OF AUTHORIZATION: 00000696

CITY OF FORT PIERCE

SURFSIDE NEIGHBORHOOD ROADWAY IMPROVEMENTS

RIO VISTA DRIVE CROSS-SECTIONS

SHEET NO. 17

shawn.singh 4/19/2018 11:25:55 AM K:\VRB_Roadway\047922017 - Surfside Rdwy Improv\Cadd\Rdwy\RDXSRD01 - RIO.DG

Regular Exc.		Embankment	
A	V	A	V

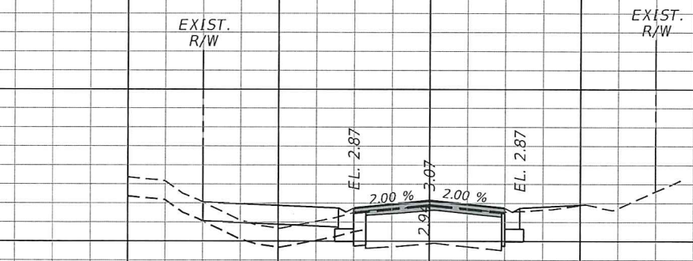

8
6
4
2
0

101+81.10

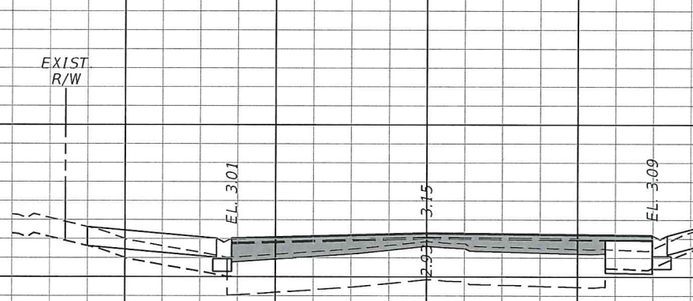

8
6
4
2
0

101+03.51

40 20 0 20 40

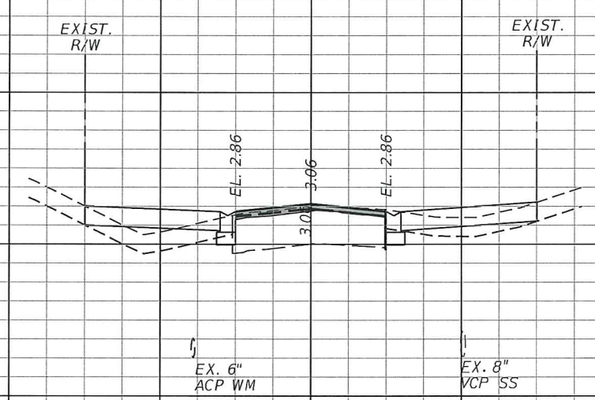

8
6
4
2
0

102+37.27

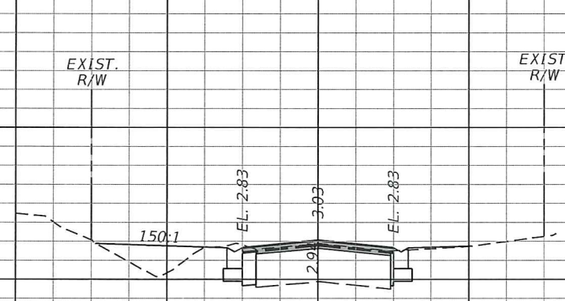

8
6
4
2
0

102+00.00

40 20 0 20 40

SCALE HOR: 1"=20'
VER: 1"=4'

Regular Exc.		Embankment	
A	V	A	V

REVISIONS

DATE	BY	DESCRIPTION	DATE	BY	DESCRIPTION

Kimley»Horn
BRIAN A. GOOD, P.E.
P.E. LICENSE NUMBER 56939
445 24th STREET, SUITE 200
VERO BEACH, FL 32960
(772) 794-4100
CERTIFICATE OF AUTHORIZATION: 00000696

CITY OF FORT PIERCE

SURFSIDE NEIGHBORHOOD ROADWAY IMPROVEMENTS

RIO VISTA DRIVE CROSS-SECTIONS

SHEET NO. 18

shawn.singh 4/19/2018 11:25:55 AM K:\VRB_Roadway\047922017 - Surfside Rdwy Improv\Cadd\Rdwy\RDXSRD01 - RIO.DG

Regular Exc.		Embankment	
A	V	A	V

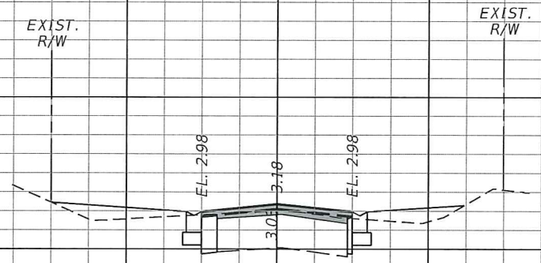

103+00.00

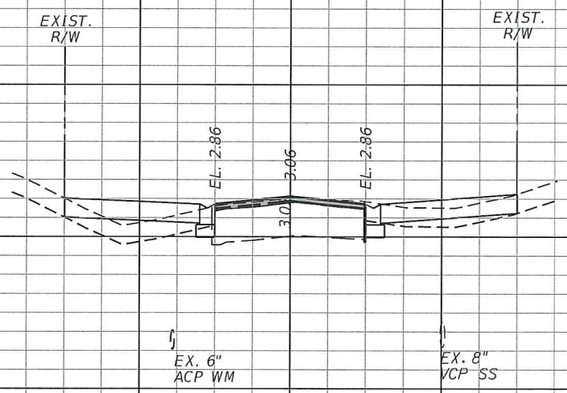

102+41.11

8 6 4 2 0

40 20 0 20 40

Regular Exc.		Embankment	
A	V	A	V

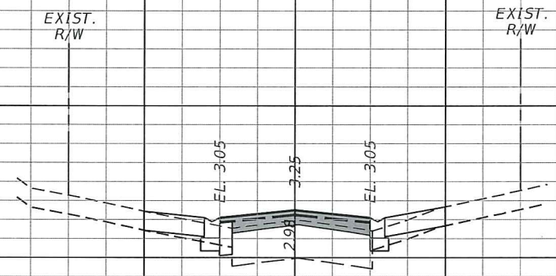

103+32.91

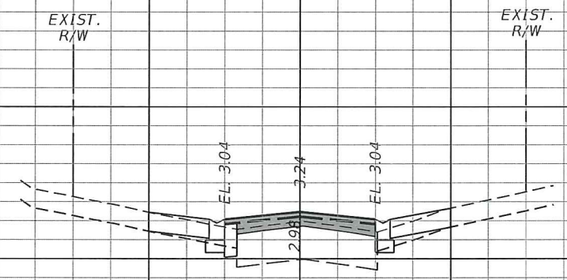

103+30.93

8 6 4 2 0

40 20 0 20 40

SCALE HOR: 1"=20'
VER: 1"=4'

REVISIONS					
DATE	BY	DESCRIPTION	DATE	BY	DESCRIPTION

Kimley»Horn
BRIAN A. GOOD, P.E.
P.E. LICENSE NUMBER 56939
445 24th STREET, SUITE 200
VERO BEACH, FL 32960
(772) 794-4100
CERTIFICATE OF AUTHORIZATION: 00000696

CITY OF FORT PIERCE

SURFSIDE NEIGHBORHOOD ROADWAY IMPROVEMENTS

RIO VISTA DRIVE CROSS-SECTIONS

SHEET NO. 19

shawn.singh 4/19/2018 11:25:55 AM K:\VRB_Roadway\047922017 - Surfside Rdwy Improv\Cadd\Rdwy\RDXSRD01 - RIO.DG

Regular Exc.		Embankment	
A	V	A	V

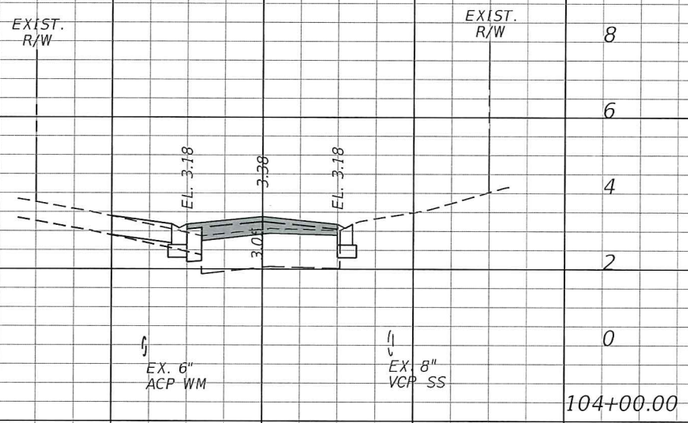

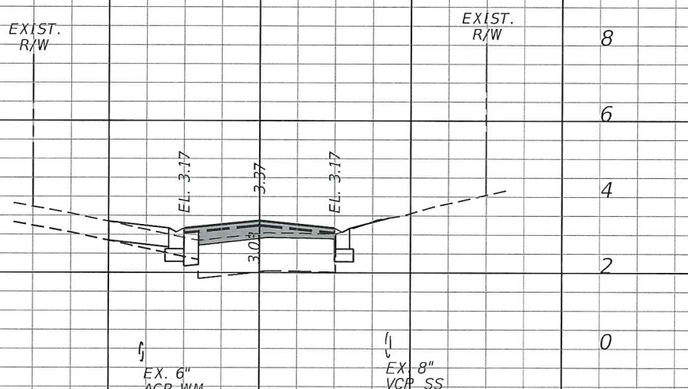

Regular Exc.		Embankment	
A	V	A	V

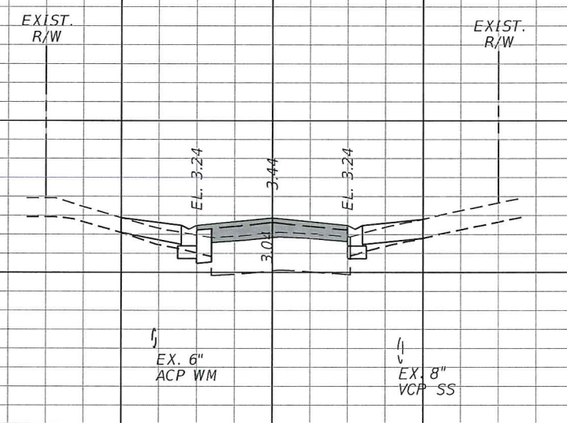

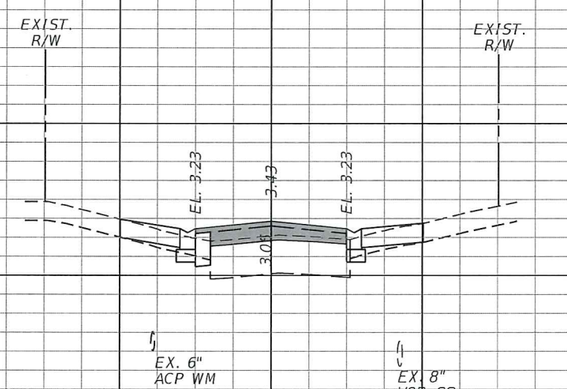

SCALE HOR: 1"=20'
VER: 1"=4'

REVISIONS					
DATE	BY	DESCRIPTION	DATE	BY	DESCRIPTION

Kimley»Horn
BRIAN A. GOOD, P.E.
P.E. LICENSE NUMBER 56939
445 24th STREET, SUITE 200
VERO BEACH, FL 32960
(772) 794-4100
CERTIFICATE OF AUTHORIZATION: 00000696

CITY OF FORT PIERCE

SURFSIDE NEIGHBORHOOD ROADWAY IMPROVEMENTS

RIO VISTA DRIVE CROSS-SECTIONS

SHEET NO. 20

Regular Exc.		Embankment	
A	V	A	V

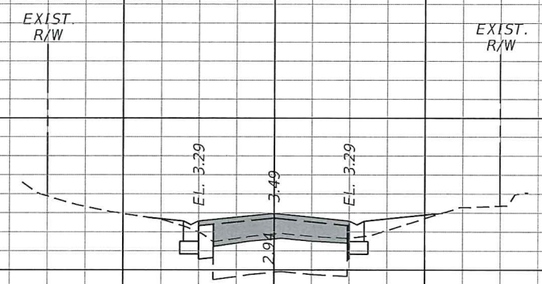

105+00.00

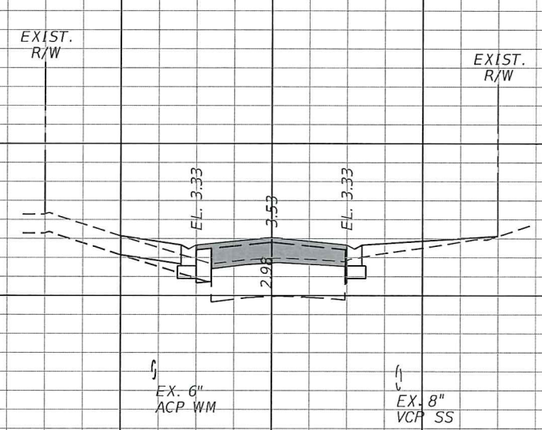

104+76.47

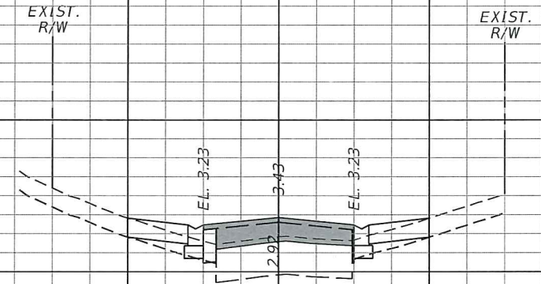

105+30.07

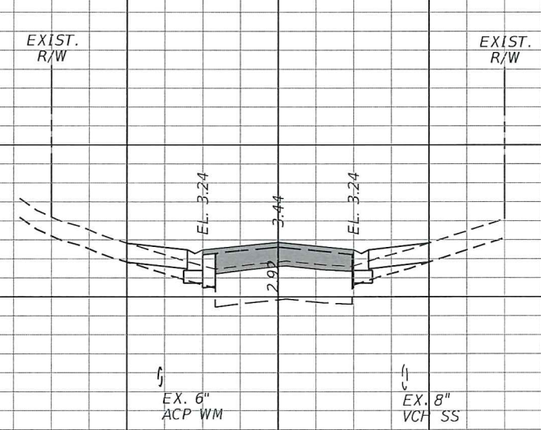

105+25.54

Regular Exc.		Embankment	
A	V	A	V

SCALE HOR: 1"=20'
VER: 1"=4'

REVISIONS					
DATE	BY	DESCRIPTION	DATE	BY	DESCRIPTION

Kimley»Horn
BRIAN A. GOOD, P.E.
P.E. LICENSE NUMBER 56939
445 24th STREET, SUITE 200
VERO BEACH, FL 32960
(772) 794-4100
CERTIFICATE OF AUTHORIZATION: 00000696

CITY OF FORT PIERCE

SURFSIDE NEIGHBORHOOD ROADWAY IMPROVEMENTS

RIO VISTA DRIVE CROSS-SECTIONS

SHEET NO. 21

Regular Exc.		Embankment	
A	V	A	V

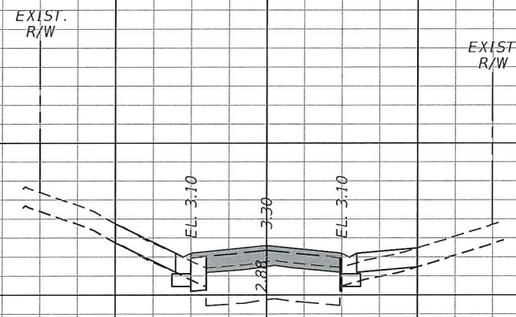

105+92.21

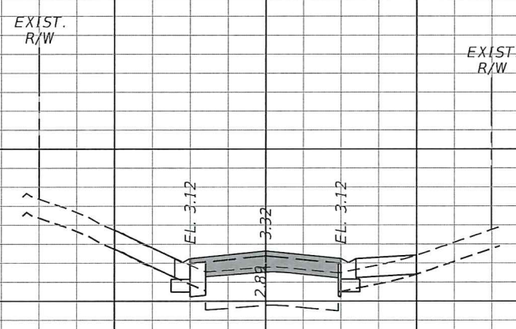

105+86.38

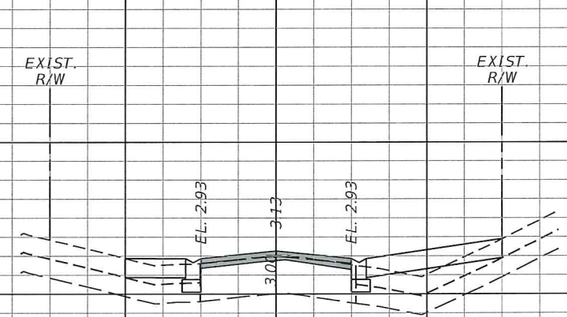

106+77.56

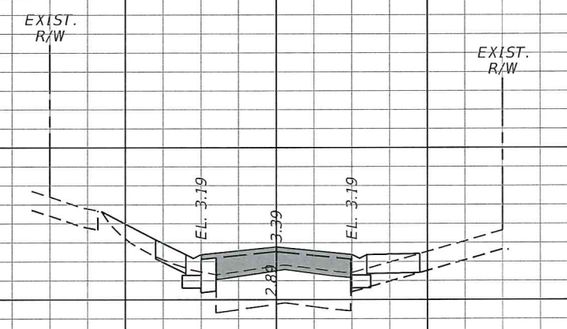

106+00.00

40 20 0 20 40

SCALE HOR: 1"=20'
VER: 1"=4'

REVISIONS					
DATE	BY	DESCRIPTION	DATE	BY	DESCRIPTION

Kimley»Horn
BRIAN A. GOOD, P.E.
P.E. LICENSE NUMBER 56939
445 24th STREET, SUITE 200
VERO BEACH, FL 32960
(772) 794-4100
CERTIFICATE OF AUTHORIZATION: 00000696

CITY OF FORT PIERCE

SURFSIDE NEIGHBORHOOD ROADWAY IMPROVEMENTS

RIO VISTA DRIVE CROSS-SECTIONS

SHEET NO. 22

shawn.singh 4/19/2018 11:25:56 AM K:\VRB_Roadway\047922017 - Surfside Rdwy Improv\Cadd\Rdwy\RDXSRD01 - RIO.DG

Regular Exc.		Embankment	
A	V	A	V

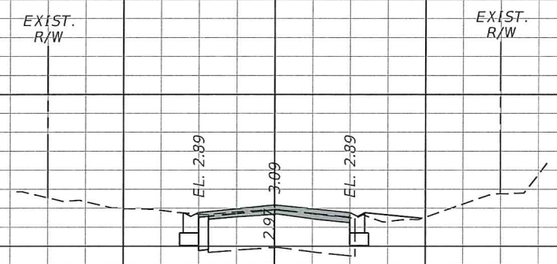

107+00.00



106+78.54

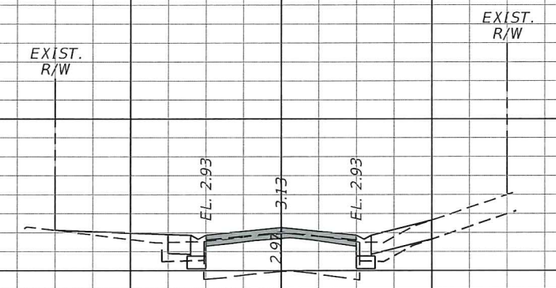

107+39.54

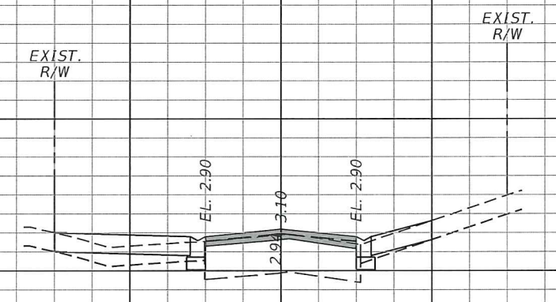

107+28.66

40 20 0 20 40

SCALE HOR: 1"=20'
VER: 1"=4'

REVISIONS					
DATE	BY	DESCRIPTION	DATE	BY	DESCRIPTION

Kimley»Horn
BRIAN A. GOOD, P.E.
P.E. LICENSE NUMBER 56939
445 24th STREET, SUITE 200
VERO BEACH, FL 32960
(772) 794-4100
CERTIFICATE OF AUTHORIZATION: 00000696

CITY OF FORT PIERCE

SURFSIDE NEIGHBORHOOD ROADWAY IMPROVEMENTS

RIO VISTA DRIVE CROSS-SECTIONS

SHEET NO. 23

Regular Exc.		Embankment	
A	V	A	V

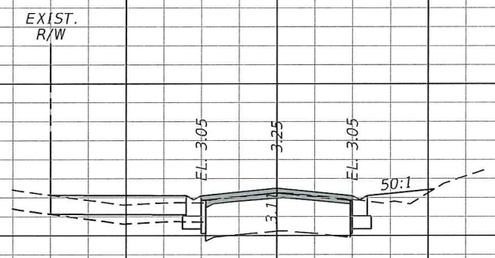

8 6 4 2 0

108+00.00

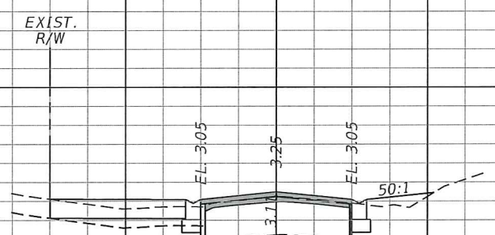

8 6 4 2 0

107+99.50

40 20 0 20 40

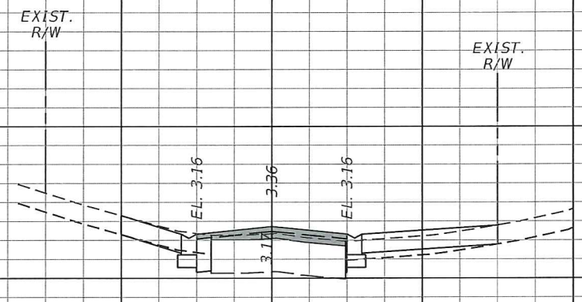

Regular Exc.		Embankment	
A	V	A	V

8 6 4 2 0

108+55.08

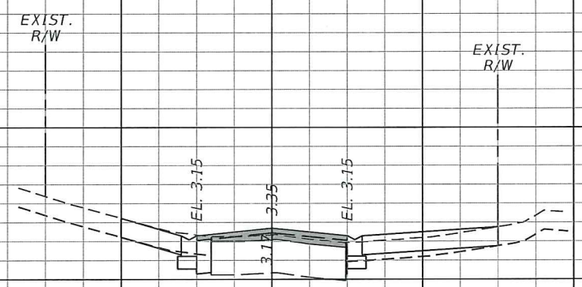

8 6 4 2 0

108+52.38

40 20 0 20 40

SCALE HOR: 1"=20'
VER: 1"=4'

REVISIONS					
DATE	BY	DESCRIPTION	DATE	BY	DESCRIPTION

Kimley»Horn
BRIAN A. GOOD, P.E.
P.E. LICENSE NUMBER 56939
445 24th STREET, SUITE 200
VERO BEACH, FL 32960
(772) 794-4100
CERTIFICATE OF AUTHORIZATION: 00000696

CITY OF FORT PIERCE

SURFSIDE NEIGHBORHOOD ROADWAY IMPROVEMENTS

RIO VISTA DRIVE CROSS-SECTIONS

SHEET NO. 24

shawn.singh 4/19/2018 11:25:56 AM K:\VRB_Roadway\04792201 - Surfside Rdwy Improv\Cadd\Rdwy\RDXSRD01 - RIO.DG

Regular Exc.		Embankment	
A	V	A	V

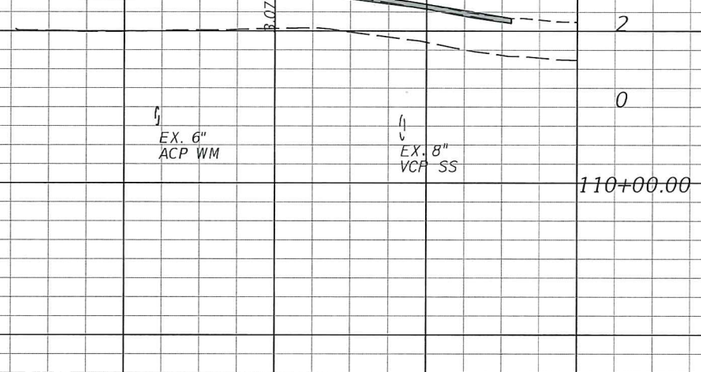

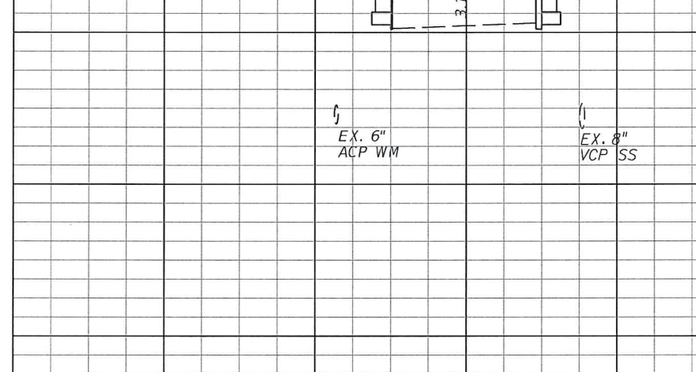

Regular Exc.		Embankment	
A	V	A	V

SCALE HOR: 1"=20'
VER: 1"=4'

REVISIONS					
DATE	BY	DESCRIPTION	DATE	BY	DESCRIPTION

Kimley»Horn
BRIAN A. GOOD, P.E.
P.E. LICENSE NUMBER 56939
445 24th STREET, SUITE 200
VERO BEACH, FL 32960
(772) 794-4100
CERTIFICATE OF AUTHORIZATION: 00000696

CITY OF FORT PIERCE

SURFSIDE NEIGHBORHOOD ROADWAY IMPROVEMENTS

RIO VISTA DRIVE CROSS-SECTIONS

SHEET NO. 25

shawn.singh 4/19/2018 11:25:56 AM K:\VRB_Roadway\04792201?_-_Surfside_Rdwy_Improv\Cadd\Rdwy\RDXSRD01_-_RIO.DG

Regular Exc.		Embankment	
A	V	A	V

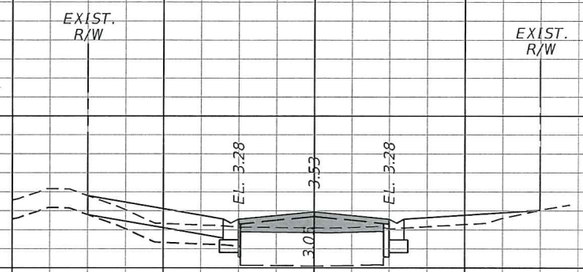

111+98.90

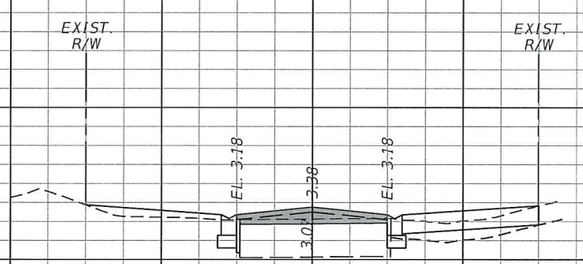

111+49.70

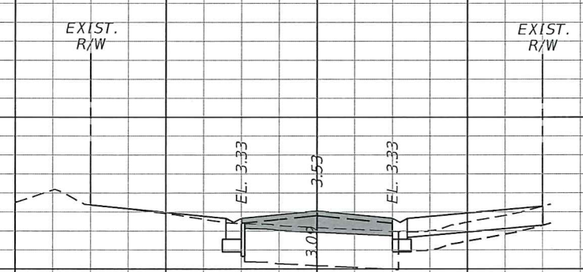

112+23.65

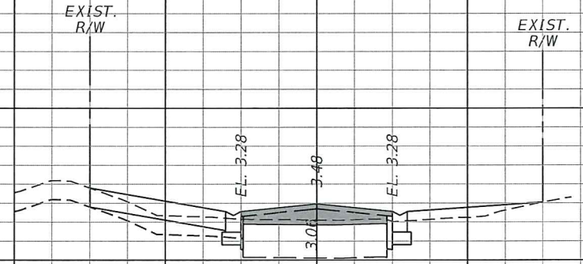

112+00.00

40 20 0 20 40

SCALE HOR: 1"=20'
VER: 1"=4'

REVISIONS					
DATE	BY	DESCRIPTION	DATE	BY	DESCRIPTION

Kimley»Horn
BRIAN A. GOOD, P.E.
P.E. LICENSE NUMBER 56939
445 24th STREET, SUITE 200
VERO BEACH, FL 32960
(772) 794-4100
CERTIFICATE OF AUTHORIZATION: 00000696

CITY OF FORT PIERCE

SURFSIDE NEIGHBORHOOD ROADWAY IMPROVEMENTS

RIO VISTA DRIVE CROSS-SECTIONS

SHEET NO. 26

shawn.singh 4/19/2018 11:25:56 AM K:\VRB_Roadway\047922017 - Surfside Rdwy Improv\Cadd\Rdwy\RDXSRD01 - RIO.DG

Regular Exc.		Embankment	
A	V	A	V

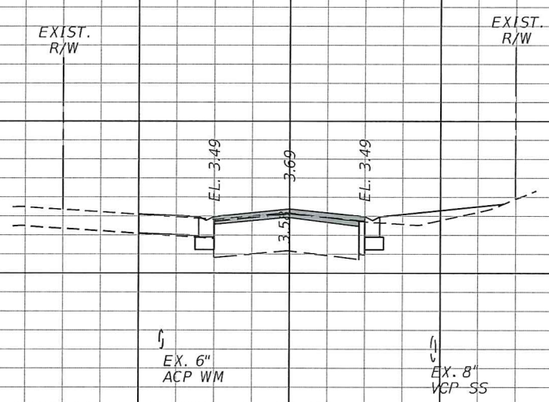

113+04.75

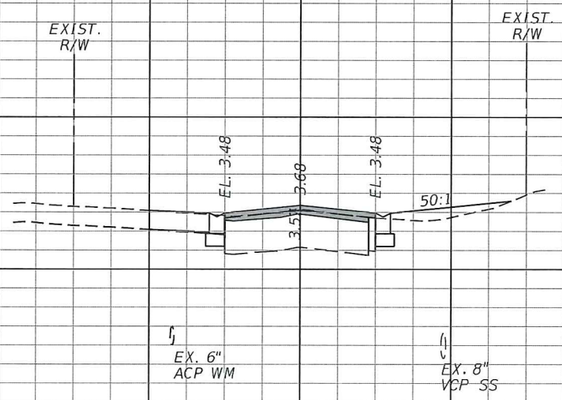

113+00.00

40 20 0 20 40

Regular Exc.		Embankment	
A	V	A	V

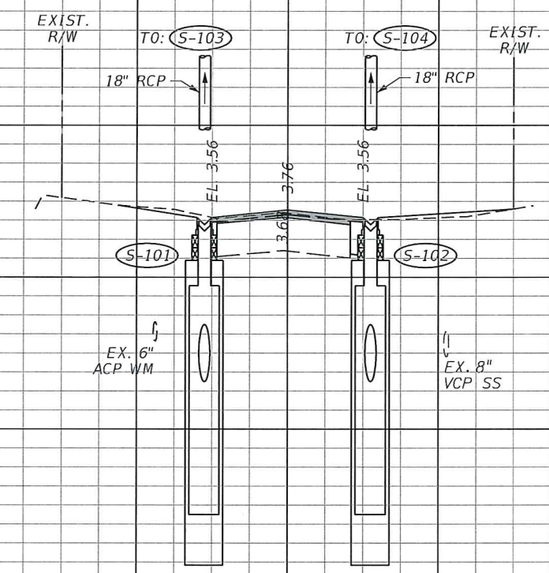

114+00.00

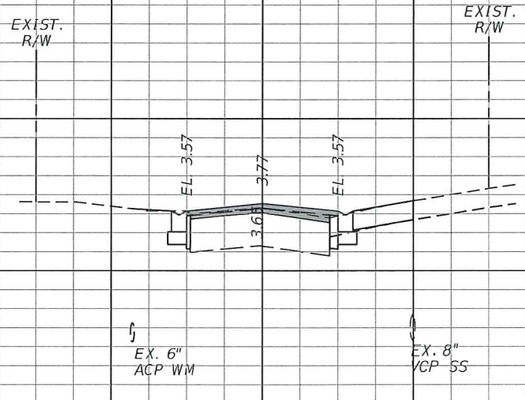

113+43.90

SCALE HOR: 1"=20'
VER: 1"=4'

40 20 0 20 40

REVISIONS					
DATE	BY	DESCRIPTION	DATE	BY	DESCRIPTION

Kimley»Horn
BRIAN A. GOOD, P.E.
P.E. LICENSE NUMBER 56939
445 24th STREET, SUITE 200
VERO BEACH, FL 32960
(772) 794-4100
CERTIFICATE OF AUTHORIZATION: 00000696

CITY OF FORT PIERCE

SURFSIDE NEIGHBORHOOD ROADWAY IMPROVEMENTS

RIO VISTA DRIVE CROSS-SECTIONS

SHEET NO. 27

shawn.singh 4/19/2018 11:25:56 AM K:\VRB_Roadway\047922017 - Surfside Rdwy Improv\Cadd\Rdwy\RDXSRD01 - RIO.DG

Regular Exc.		Embankment	
A	V	A	V

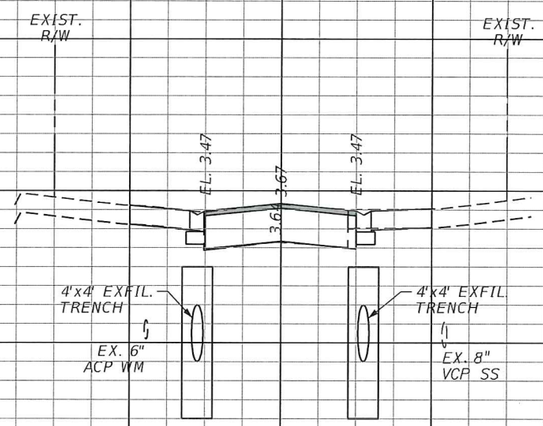

114+34.13

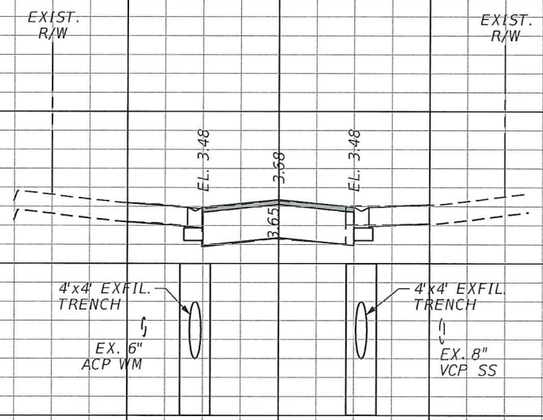

114+31.44

40 20 0 20 40

Regular Exc.		Embankment	
A	V	A	V

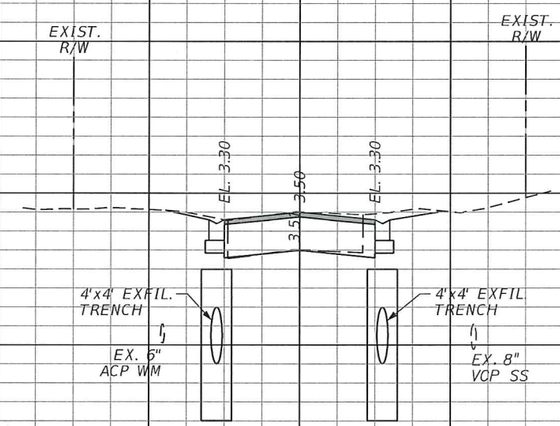

115+00.00

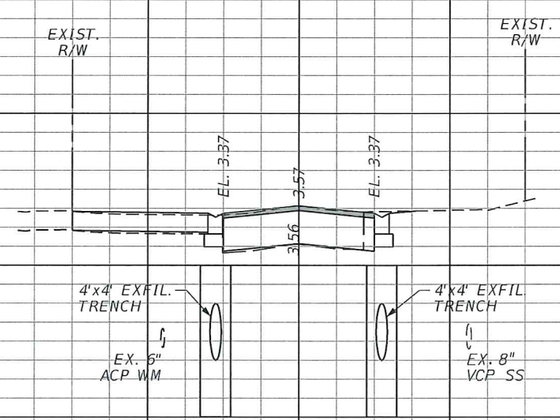

114+73.18

SCALE HOR: 1"=20'
VER: 1"=4'

40 20 0 20 40

REVISIONS					
DATE	BY	DESCRIPTION	DATE	BY	DESCRIPTION

Kimley»Horn
BRIAN A. GOOD, P.E.
P.E. LICENSE NUMBER 56939
445 24th STREET, SUITE 200
VERO BEACH, FL 32960
(772) 794-4100
CERTIFICATE OF AUTHORIZATION: 00000696

CITY OF FORT PIERCE

SURFSIDE NEIGHBORHOOD ROADWAY IMPROVEMENTS

RIO VISTA DRIVE CROSS-SECTIONS

SHEET NO. 28

shawn.singh 4/9/2018 11:25:56 AM K:\VRB_Roadway\047922017 - Surfside Rdwy Improv\Cadd\Rdwy\RDXSRD01 - RIO.DG

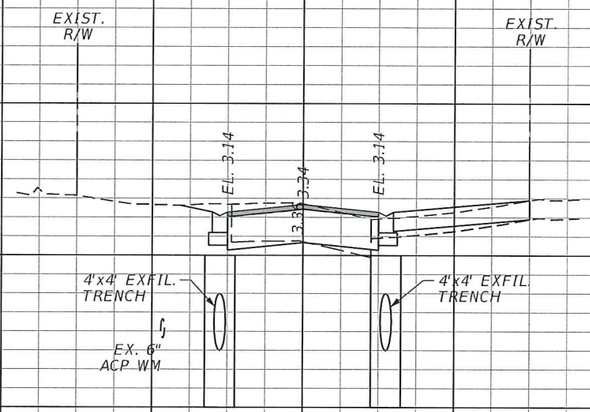

115+61.23

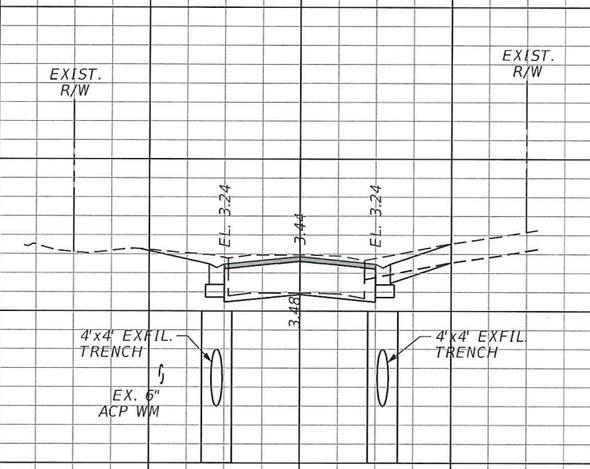

115+22.48

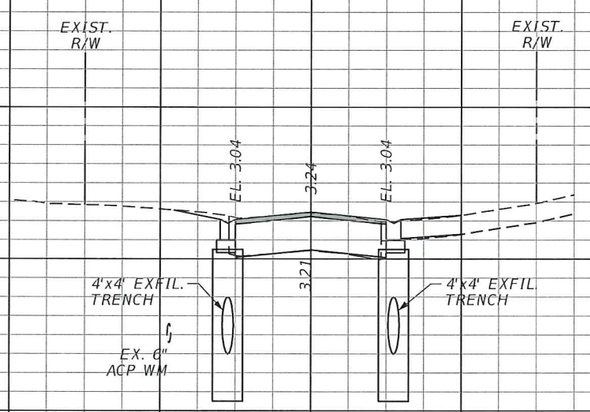

116+00.00

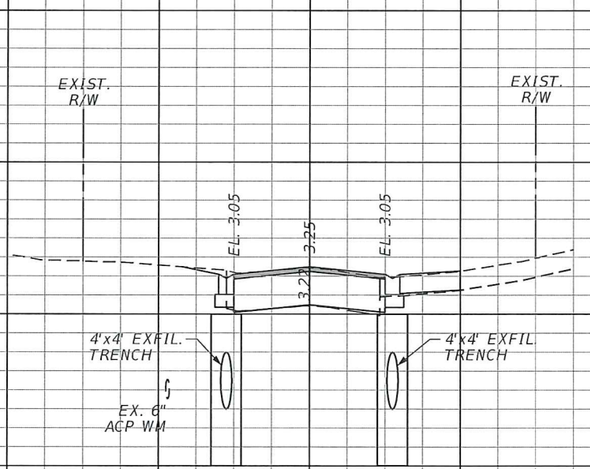

115+97.85

Regular Exc.		Embankment	
A	V	A	V

Regular Exc.		Embankment	
A	V	A	V

8 6 4 2 0

40 20 0 20 40

SCALE HOR: 1"=20'
VER: 1"=4'

REVISIONS					
DATE	BY	DESCRIPTION	DATE	BY	DESCRIPTION

Kimley»Horn
BRIAN A. GOOD, P.E.
P.E. LICENSE NUMBER 56939
445 24th STREET, SUITE 200
VERO BEACH, FL 32960
(772) 794-4100
CERTIFICATE OF AUTHORIZATION: 00000696

CITY OF FORT PIERCE

SURFSIDE NEIGHBORHOOD
ROADWAY IMPROVEMENTS

RIO VISTA DRIVE
CROSS-SECTIONS

SHEET NO. 29

shawn.singh 4/19/2018 11:25:57 AM K:\VRB_Roadway\047922017 - Surfside Rdwy Improv\Cadd\Rdwy\RDXSRD01 - RIO.DG

Regular Exc.		Embankment	
A	V	A	V

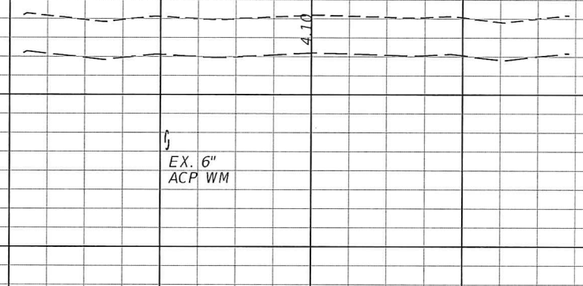

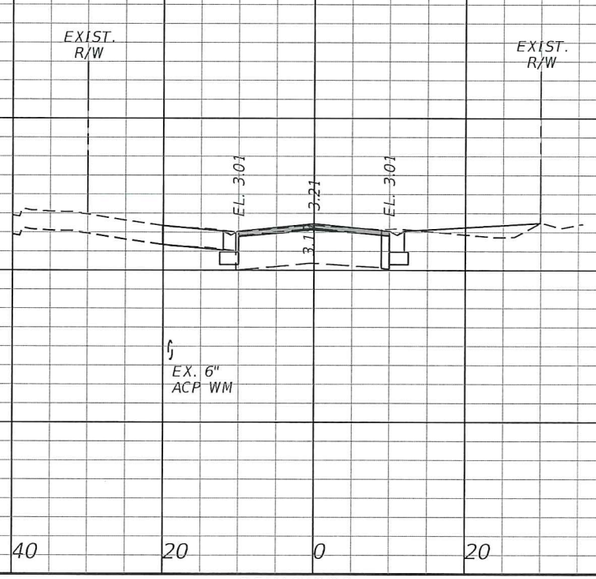

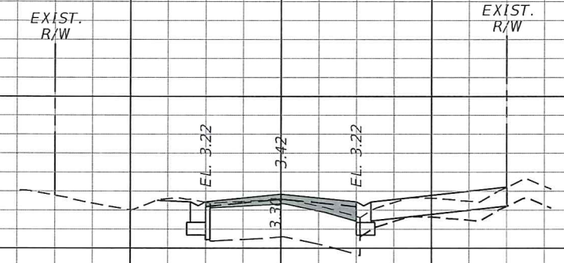

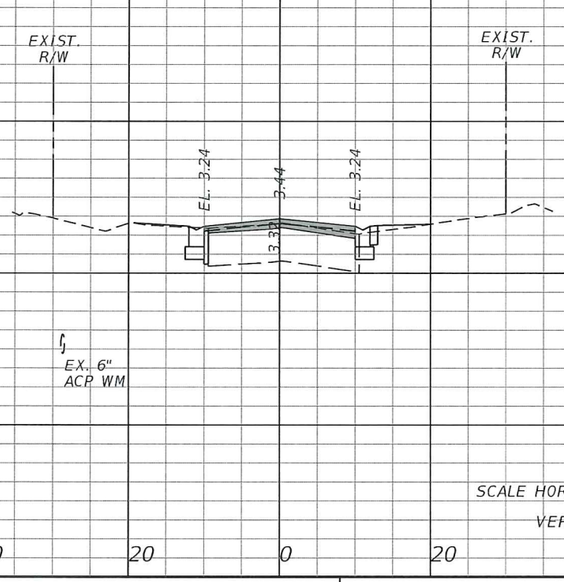

Regular Exc.		Embankment	
A	V	A	V

REVISIONS					
DATE	BY	DESCRIPTION	DATE	BY	DESCRIPTION

Kimley»Horn
BRIAN A. GOOD, P.E.
P.E. LICENSE NUMBER 56939
445 24th STREET, SUITE 200
VERO BEACH, FL 32960
(772) 794-4100
CERTIFICATE OF AUTHORIZATION: 00000696

CITY OF FORT PIERCE

SURFSIDE NEIGHBORHOOD ROADWAY IMPROVEMENTS

RIO VISTA DRIVE CROSS-SECTIONS

SHEET NO. 30

shawn.singh 4/19/2018 11:25:57 AM K:\VRB_Roadway\047922017 - Surfside Rdwy Improv\Cadd\Rdwy\RDXSRD01 - RIO.DG

Regular Exc.		Embankment	
A	V	A	V

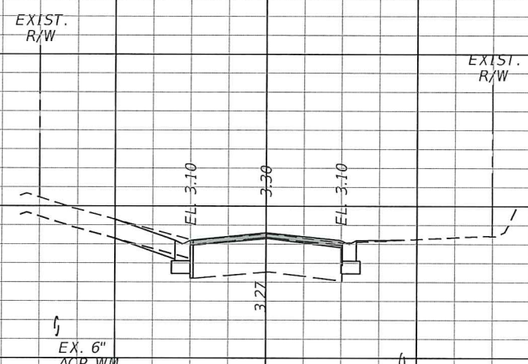

118+91.82

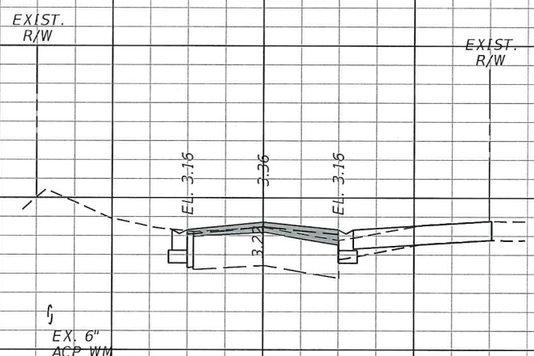

118+50.91

40 20 0 20 40

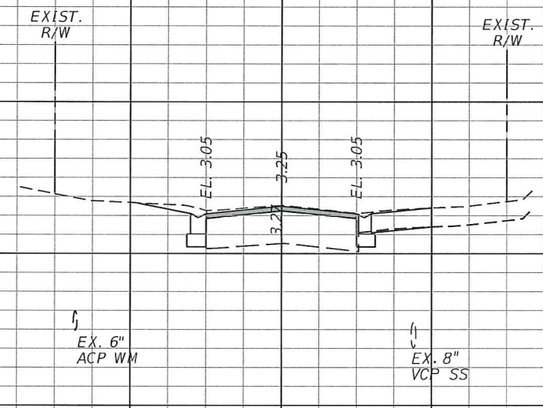

119+29.31

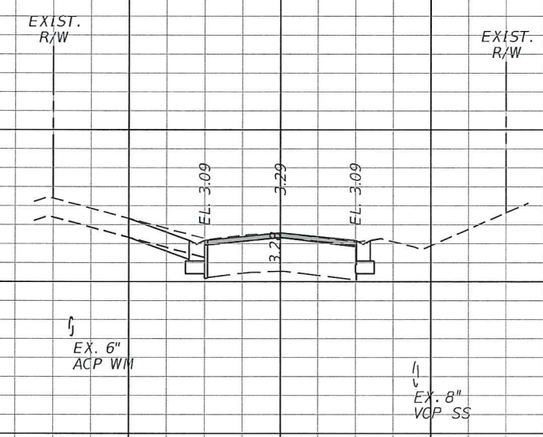

119+00.00

40 20 0 20 40

SCALE HOR: 1"=20'
VER: 1"=4'

REVISIONS					
DATE	BY	DESCRIPTION	DATE	BY	DESCRIPTION

Kimley»Horn
BRIAN A. GOOD, P.E.
P.E. LICENSE NUMBER 56939
445 24th STREET, SUITE 200
VERO BEACH, FL 32960
(772) 794-4100
CERTIFICATE OF AUTHORIZATION: 00000696

CITY OF FORT PIERCE

SURFSIDE NEIGHBORHOOD ROADWAY IMPROVEMENTS

RIO VISTA DRIVE CROSS-SECTIONS

SHEET NO. 31

shawn.singh 4/9/2018 11:25:57 AM K:\VRB_Roadway\047922017 - Surfside Rdwy Improv\Cadd\Rdwy\RDXSRD01 - RIO.DG

Regular Exc.		Embankment	
A	V	A	V

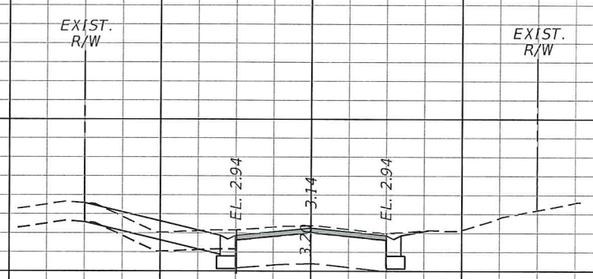



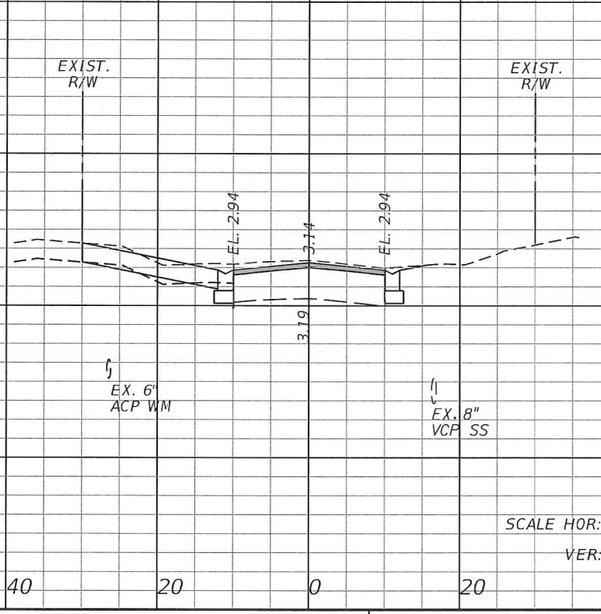

Regular Exc.		Embankment	
A	V	A	V

REVISIONS					
DATE	BY	DESCRIPTION	DATE	BY	DESCRIPTION

Kimley»Horn
BRIAN A. GOOD, P.E.
P.E. LICENSE NUMBER 56939
445 24th STREET, SUITE 200
VERO BEACH, FL 32960
(772) 794-4100
CERTIFICATE OF AUTHORIZATION: 00000696

CITY OF FORT PIERCE

SURFSIDE NEIGHBORHOOD ROADWAY IMPROVEMENTS

RIO VISTA DRIVE CROSS-SECTIONS

SHEET NO. 32

shawn.singh 4/19/2018 11:25:57 AM K:\VRB_Roadway\047922017 - Surfside Rdwy Improv\Cadd\Rdwy\RDXSRD01 - RIO.DG

Regular Exc.		Embankment	
A	V	A	V

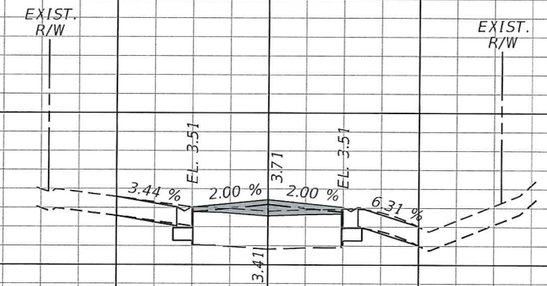

8 6 4 2

202+69.21

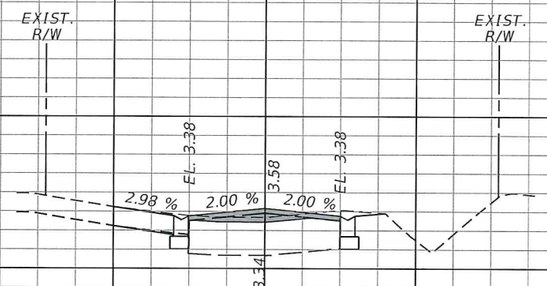

8 6 4 2

202+14.74

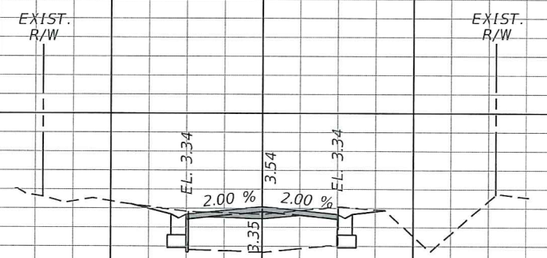

8 6 4

202+00.00

40 20 0 20 40

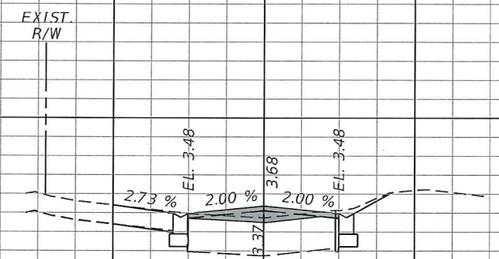

8 6 4

203+32.35

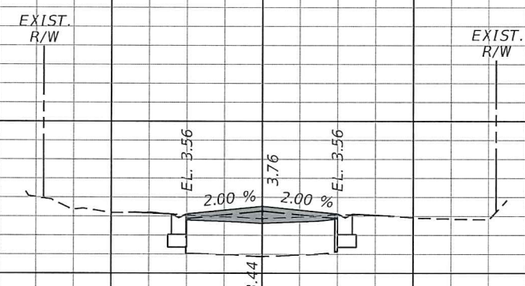

8 6 4 2

203+00.00

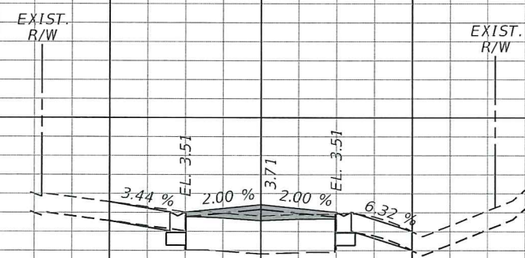

8 6 4 2

202+70.42

SCALE HOR: 1"=20'

VER: 1"=4'

40 20 0 20 40

REVISIONS					
DATE	BY	DESCRIPTION	DATE	BY	DESCRIPTION

Kimley»Horn

BRIAN A. GOOD, P.E.
P.E. LICENSE NUMBER 56939
445 24th STREET, SUITE 200
VERO BEACH, FL 32960
(772) 794-4100
CERTIFICATE OF AUTHORIZATION: 00000696

CITY OF FORT PIERCE

SURFSIDE NEIGHBORHOOD ROADWAY IMPROVEMENTS

BAYSHORE DRIVE CROSS-SECTIONS

SHEET NO. 33

shawn.singh 4/19/2018 11:25:57 AM K:\VRB_Roadway\047922017 - Surfside Rdwy Improv\Cadd\Rdwy\RDXSR001 - BAY.DX

Regular Exc.		Embankment	
A	V	A	V

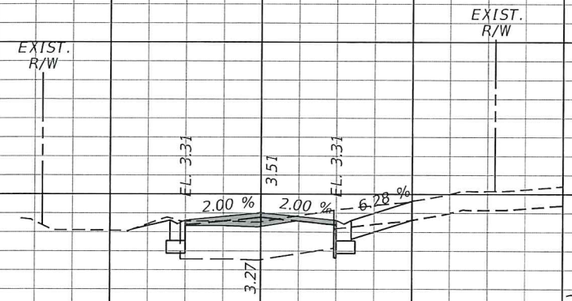

8 6 4 2

204+01.80

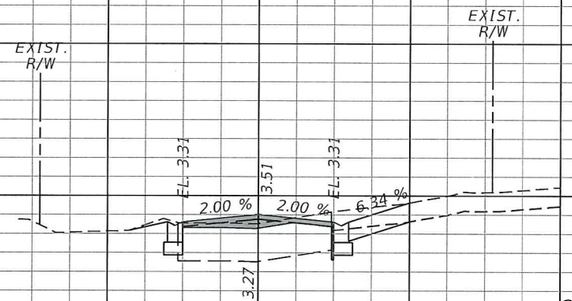

8 6 4 2

204+00.00

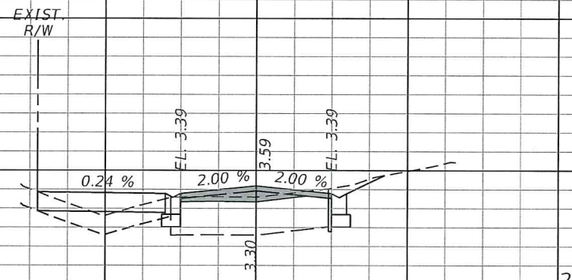

8 6 4 2

203+68.21

40 20 0 20 40

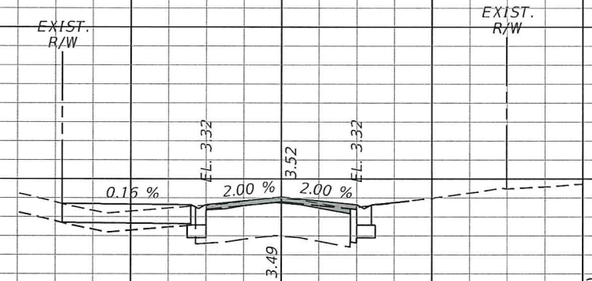

8 6 4 2

204+82.73

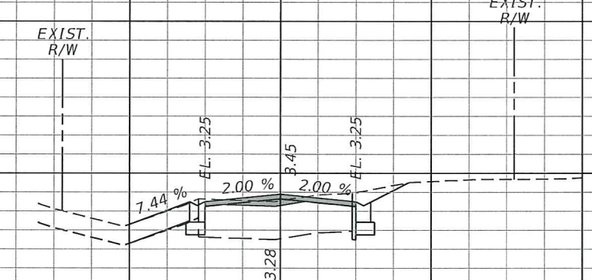

8 6 4 2

204+23.74

SCALE HOR: 1"=20'
VER: 1"=4'

40 20 0 20 40

REVISIONS					
DATE	BY	DESCRIPTION	DATE	BY	DESCRIPTION

Kimley»Horn
BRIAN A. GOOD, P.E.
P.E. LICENSE NUMBER 56939
445 24th STREET, SUITE 200
VERO BEACH, FL 32960
(772) 794-4100
CERTIFICATE OF AUTHORIZATION: 00000696

CITY OF FORT PIERCE

SURFSIDE NEIGHBORHOOD ROADWAY IMPROVEMENTS

BAYSHORE DRIVE CROSS-SECTIONS

SHEET NO. 34

shawn.singh 4/19/2018 11:25:57 AM K:\VRB_Roadway\047922017 - Surfside Rdwy Improv\Cadd\Rdwy\RDXSRD01 - BAY.DX

Regular Exc.		Embankment	
A	V	A	V

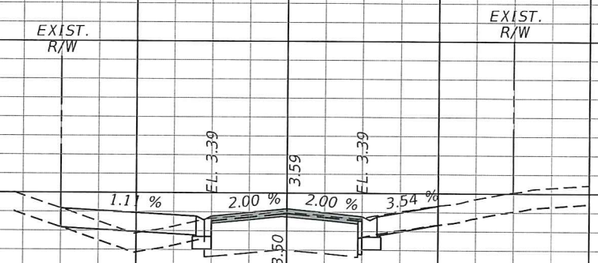

205+10.42

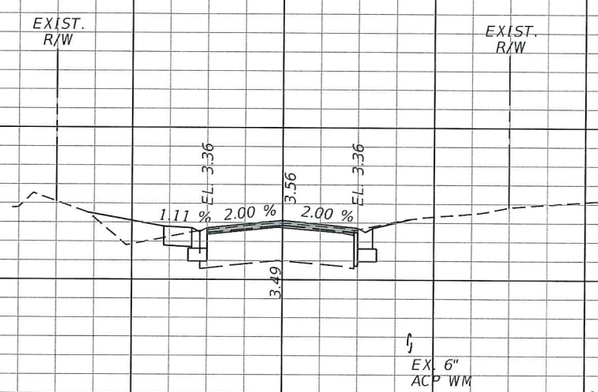

205+00.00

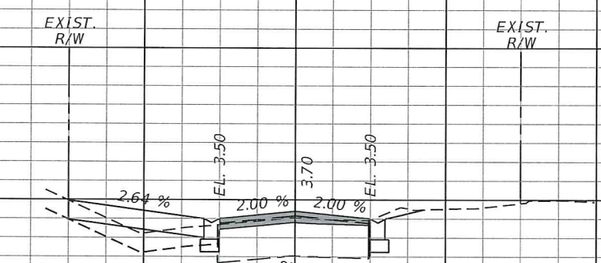

205+55.75

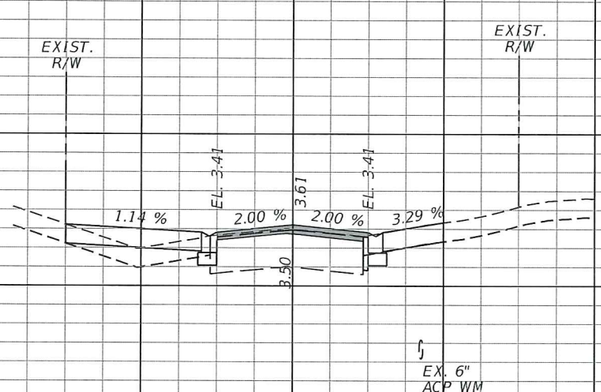

205+16.81

Regular Exc.		Embankment	
A	V	A	V

SCALE HOR: 1"=20'
VER: 1"=4'

40 20 0 20 40

REVISIONS

DATE	BY	DESCRIPTION	DATE	BY	DESCRIPTION

Kimley»Horn
BRIAN A. GOOD, P.E.
P.E. LICENSE NUMBER 56939
445 24th STREET, SUITE 200
VERO BEACH, FL 32960
(772) 794-4100
CERTIFICATE OF AUTHORIZATION: 00000696

CITY OF FORT PIERCE

SURFSIDE NEIGHBORHOOD ROADWAY IMPROVEMENTS

BAYSHORE DRIVE CROSS-SECTIONS

SHEET NO. 35

shawn.singh 4/19/2018 11:25:58 AM K:\VRB_Roadway\047922017 - Surfside Rdwy Improv\Cadd\Rdwy\RDXSRD01 - BAY.DX

Regular Exc.		Embankment	
A	V	A	V

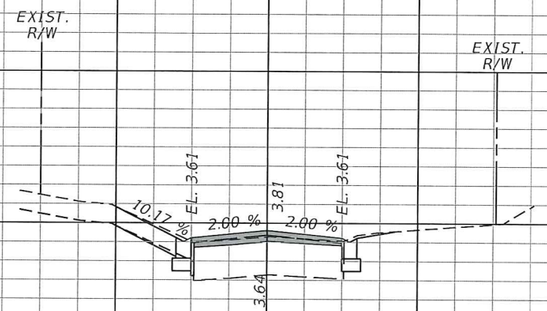

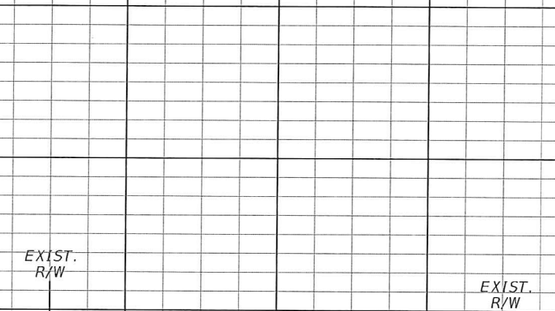

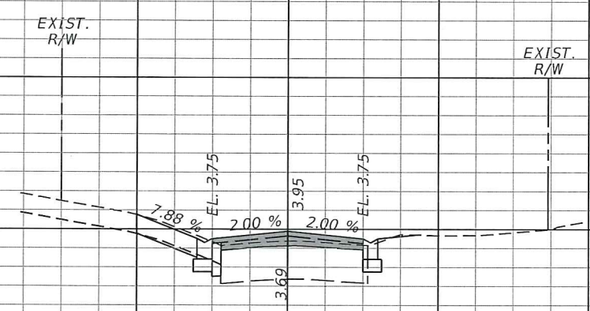

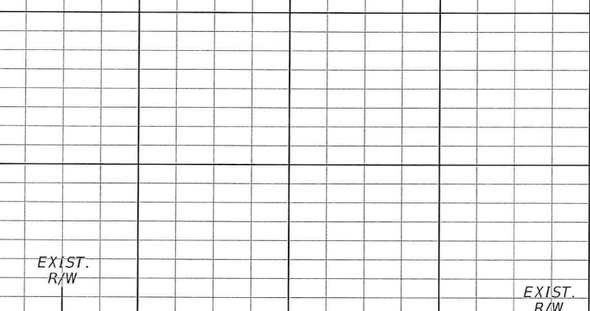

8 6 4 2 40 20 0 20 40

SCALE HOR: 1"=20'
VER: 1"=4'

REVISIONS					
DATE	BY	DESCRIPTION	DATE	BY	DESCRIPTION

Kimley»Horn
BRIAN A. GOOD, P.E.
P.E. LICENSE NUMBER 56939
445 24th STREET, SUITE 200
VERO BEACH, FL 32960
(772) 794-4100
CERTIFICATE OF AUTHORIZATION: 00000696

CITY OF FORT PIERCE

SURFSIDE NEIGHBORHOOD ROADWAY IMPROVEMENTS

BAYSHORE DRIVE CROSS-SECTIONS

SHEET NO. 36

shawn.singh 4/19/2018 11:25:58 AM K:\VRB_Roadway\047922017 - Surfside Rdwy Improv\Cadd\Rdwy\RDXSRD01 - BAY.DX

Regular Exc.		Embankment	
A	V	A	V

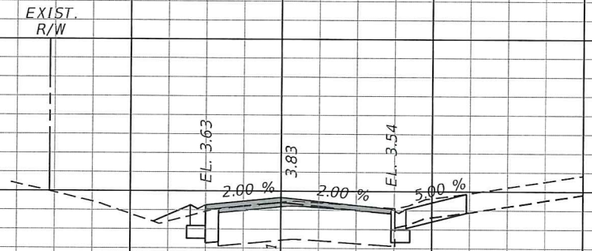

207+02.86

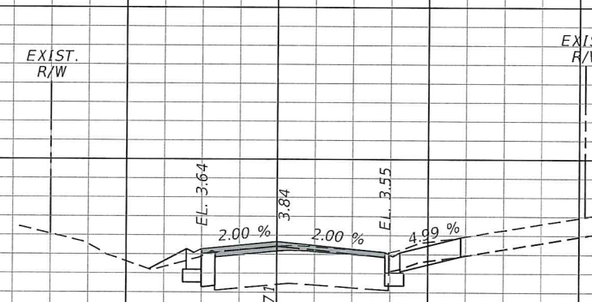

207+00.00

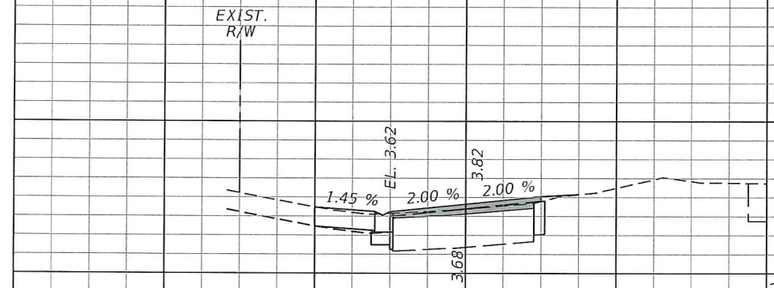

208+50.31

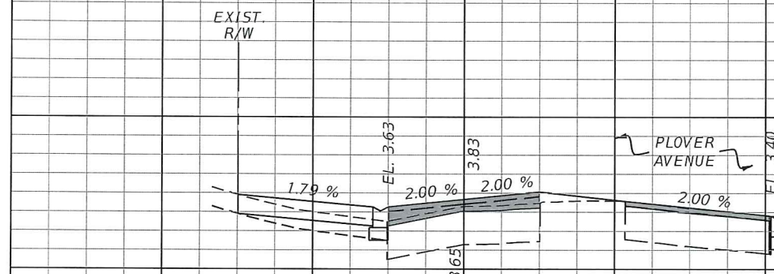

208+00.00

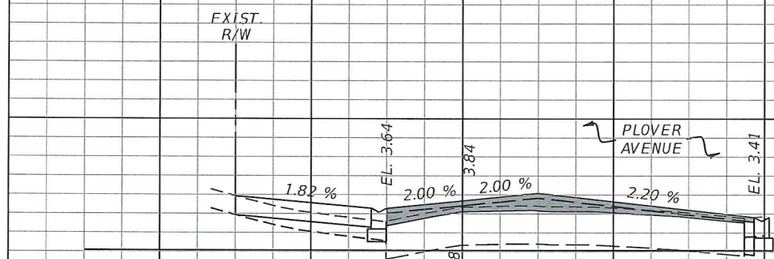

207+93.74

SCALE HOR: 1"=20'
VER: 1"=4'

Regular Exc.		Embankment	
A	V	A	V

REVISIONS					
DATE	BY	DESCRIPTION	DATE	BY	DESCRIPTION

Kimley»Horn
BRIAN A. GOOD, P.E.
P.E. LICENSE NUMBER 56939
445 24th STREET, SUITE 200
VERO BEACH, FL 32960
(772) 794-4100
CERTIFICATE OF AUTHORIZATION: 00000696

CITY OF FORT PIERCE

SURFSIDE NEIGHBORHOOD
ROADWAY IMPROVEMENTS

BAYSHORE DRIVE
CROSS-SECTIONS

SHEET NO. 37

shawn.singh 4/19/2018 11:25:58 AM K:\VRB_Roadway\047922017 - Surfside Rdwy Improv\Cadd\Rdwy\RDXSRD01 - BAY.DX

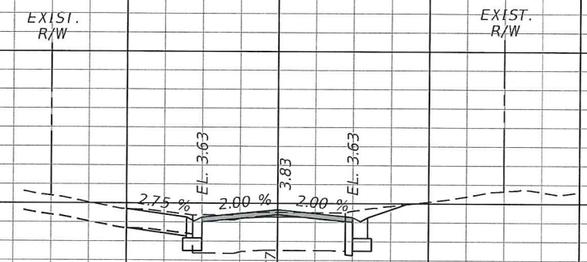

209+66.95

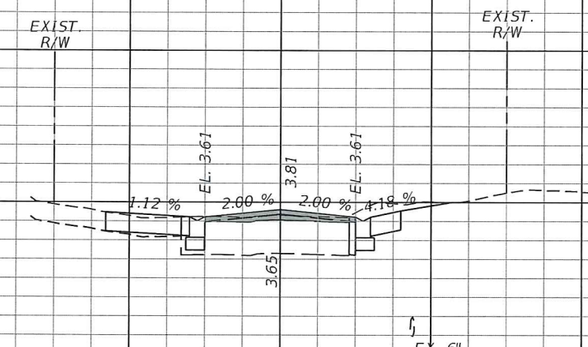

210+00.00

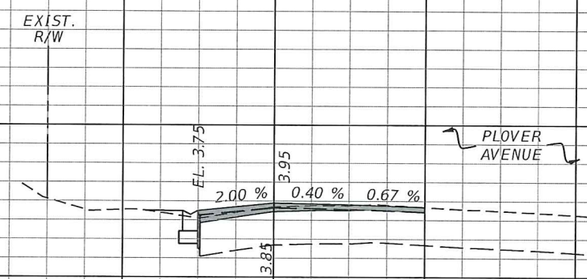

209+00.00

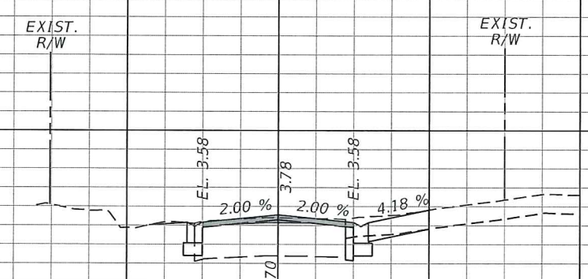

209+86.35

SCALE HOR: 1"=20'
VER: 1"=4'

Regular Exc.		Embankment	
A	V	A	V

REVISIONS					
DATE	BY	DESCRIPTION	DATE	BY	DESCRIPTION

Kimley»Horn
BRIAN A. GOOD, P.E.
P.E. LICENSE NUMBER 56939
445 24th STREET, SUITE 200
VERO BEACH, FL 32960
(772) 794-4100
CERTIFICATE OF AUTHORIZATION: 00000696

CITY OF FORT PIERCE

SURFSIDE NEIGHBORHOOD ROADWAY IMPROVEMENTS

BAYSHORE DRIVE CROSS-SECTIONS

SHEET NO. 38

shawn.singh 4/19/2018 11:25:58 AM K:\VRB_Roadway\047922017 - Surfside Rdwy Improv\Cadd\Rdwy\RDXSRD01 - BAY.DC

Regular Exc.		Embankment	
A	V	A	V

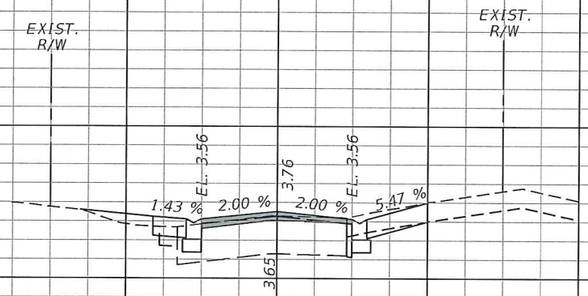

210+53.18

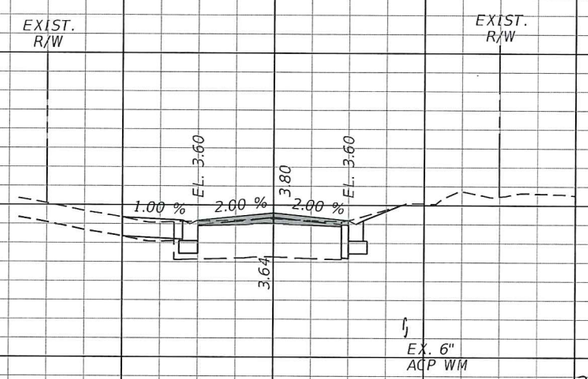

210+04.81

40 20 0 20 40

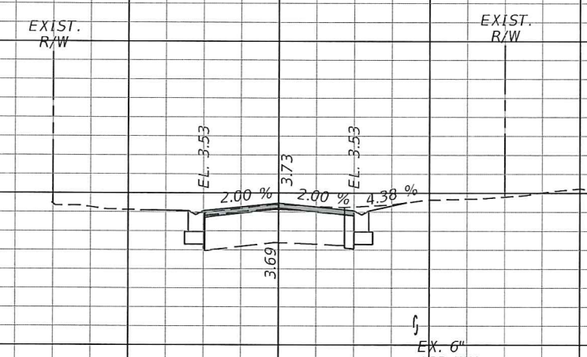

211+00.00

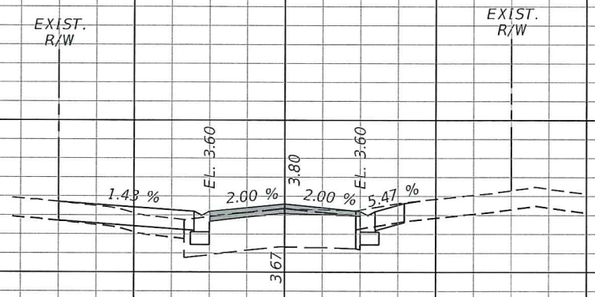

210+67.80

SCALE HOR: 1"=20'
VER: 1"=4'

40 20 0 20 40

Regular Exc.		Embankment	
A	V	A	V

REVISIONS					
DATE	BY	DESCRIPTION	DATE	BY	DESCRIPTION

Kimley»Horn
BRIAN A. GOOD, P.E.
P.E. LICENSE NUMBER 56939
445 24th STREET, SUITE 200
VERO BEACH, FL 32960
(772) 794-4100
CERTIFICATE OF AUTHORIZATION: 00000696

CITY OF FORT PIERCE

SURFSIDE NEIGHBORHOOD ROADWAY IMPROVEMENTS

BAYSHORE DRIVE CROSS-SECTIONS

SHEET NO. 39

shawn.singh 4/19/2018 11:25:58 AM K:\VRB_Roadway\047922017 - Surfside Rdwy Improv\Cadd\Rdwy\RDXSRD01 - BAY.DX

Regular Exc.		Embankment	
A	V	A	V

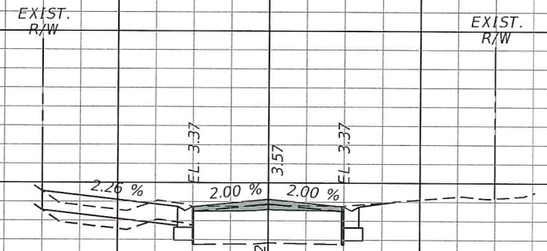

211+91.40

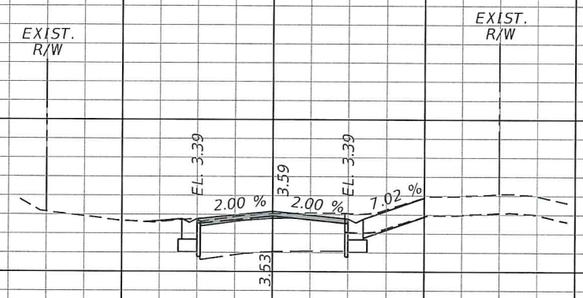

211+56.16

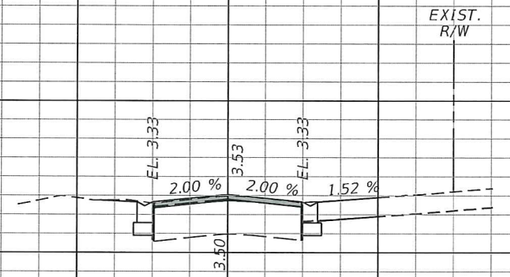

212+29.84

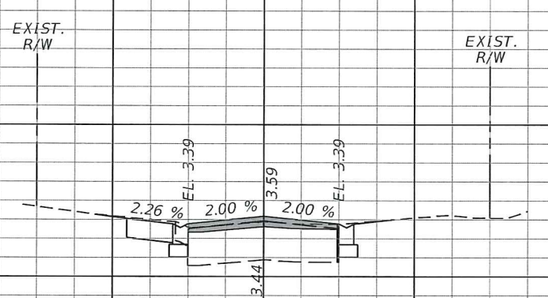

212+00.00

40 20 0 20 40

SCALE HOR: 1"=20'
VER: 1"=4'

Regular Exc.		Embankment	
A	V	A	V

REVISIONS

DATE	BY	DESCRIPTION	DATE	BY	DESCRIPTION

Kimley»Horn
BRIAN A. GOOD, P.E.
P.E. LICENSE NUMBER 56939
445 24th STREET, SUITE 200
VERO BEACH, FL 32960
(772) 794-4100
CERTIFICATE OF AUTHORIZATION: 00000696

CITY OF FORT PIERCE

SURFSIDE NEIGHBORHOOD
ROADWAY IMPROVEMENTS

BAYSHORE DRIVE
CROSS-SECTIONS

SHEET NO. 40

shawn.singh 4/19/2018 11:25:58 AM K:\VRB_Roadway\047922017 - Surfside Rdwy Improv\Cadd\Rdwy\RDXSRD01 - BAY.DX

Regular Exc.		Embankment	
A	V	A	V

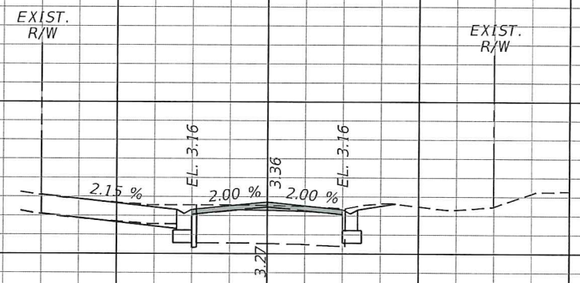

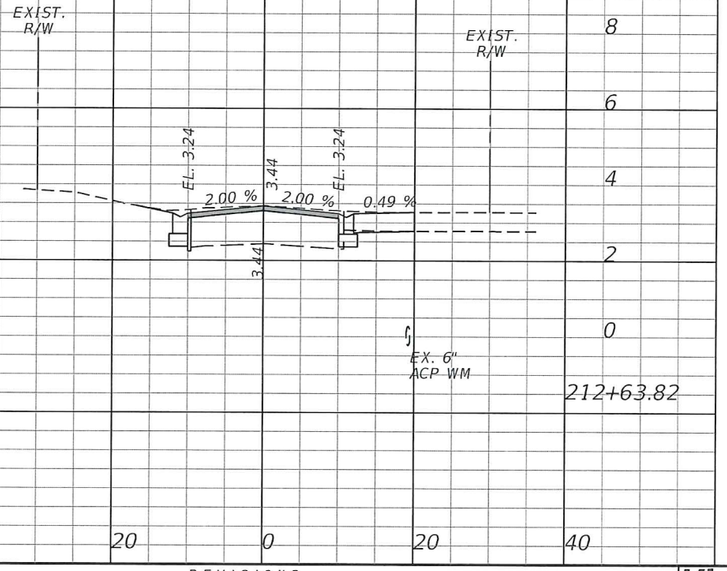

Regular Exc.		Embankment	
A	V	A	V

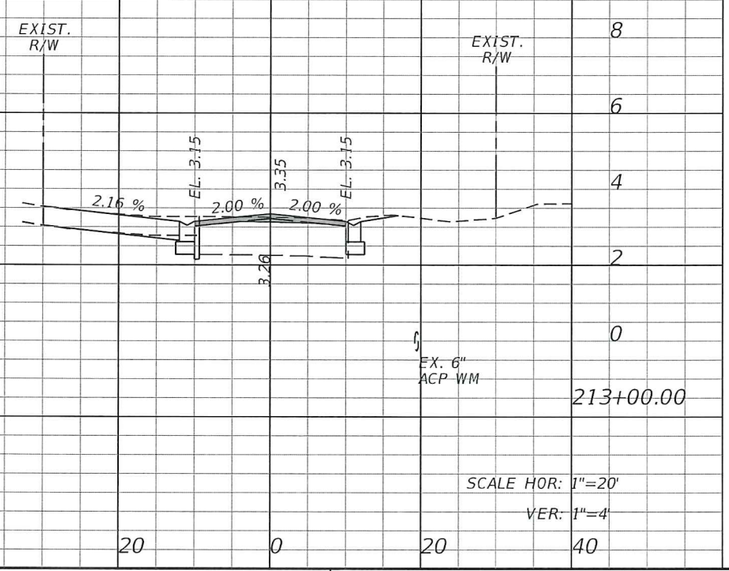

REVISIONS					
DATE	BY	DESCRIPTION	DATE	BY	DESCRIPTION

Kimley»Horn
BRIAN A. GOOD, P.E.
P.E. LICENSE NUMBER 56939
445 24th STREET, SUITE 200
VERO BEACH, FL 32960
(772) 794-4100
CERTIFICATE OF AUTHORIZATION: 00000696

CITY OF FORT PIERCE

SURFSIDE NEIGHBORHOOD ROADWAY IMPROVEMENTS

BAYSHORE DRIVE CROSS-SECTIONS

SHEET NO. 41

shawn.singh 4/19/2018 11:25:58 AM K:\VRB_Roadway\047922017 - Surfside Rdwy Improv\Cadd\Rdwy\RDXSRD01 - BAY.DG

BEGIN RIO VISTA DRIVE SIGNING & MARKING
STA. 100+70.00

EXIST. R/W

℄ CONST.

EXIST. R/W

101 102 103 104 105

MATCHLINE STA. 105+50.00

N

0 10 40
Feet

MATCHLINE STA. 105+50.00

EXIST. R/W

106 107 108 109 110

℄ CONST.

EXIST. R/W

TO REMAIN

DEAD END

TO REMAIN

MIMOSA AVE
STOP
RIO VISTA DR

24" WHITE

24" WHITE

MIMOSA AVENUE

RIO VISTA DR
MIMOSA AVE
STOP

TO REMAIN

MATCHLINE STA. 111+00.00

N

0 10 40
Feet

REVISIONS

DATE	BY	DESCRIPTION	DATE	BY	DESCRIPTION

Kimley»Horn
BRIAN A. GOOD, P.E.
P.E. LICENSE NUMBER 56939
445 24th STREET, SUITE 200
VERO BEACH, FL 32960
(772) 794-4100
CERTIFICATE OF AUTHORIZATION: 00000696

CITY OF FORT PIERCE

SURFSIDE NEIGHBORHOOD ROADWAY IMPROVEMENTS

RIO VISTA DRIVE SIGNING AND MARKING

SHEET NO. 42

shawn.singh 4/19/2018 11:25:59 AM K:\VRB_Roadway\047922017 - Surfside Rdwy Improv\Cadd\Rdwy\PLANS_SIGN.

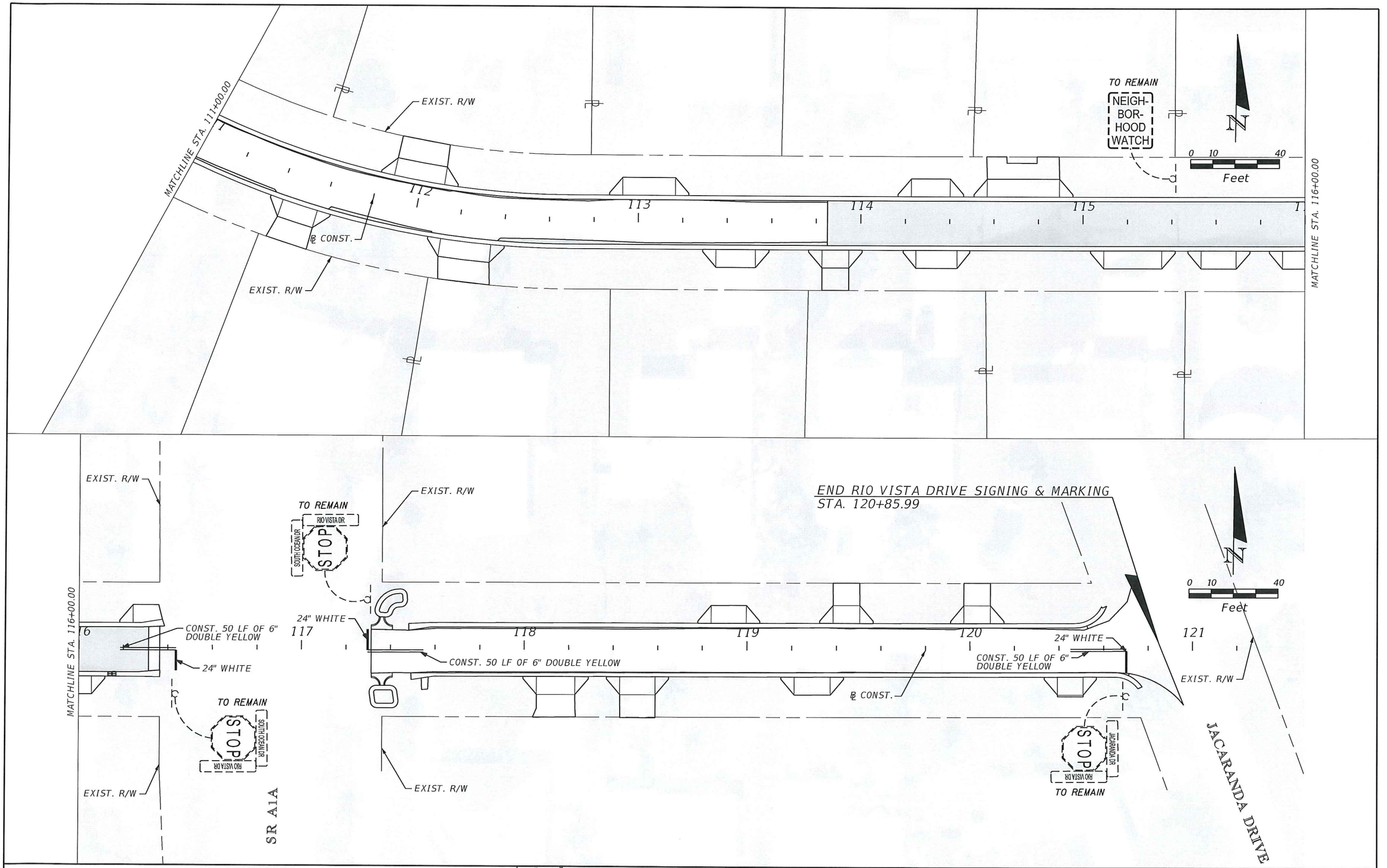

REVISIONS					
DATE	BY	DESCRIPTION	DATE	BY	DESCRIPTION

Kimley»Horn
BRIAN A. GOOD, P.E.
P.E. LICENSE NUMBER 56939
415 24th STREET, SUITE 200
VERO BEACH, FL 32960
(772) 794-4100
CERTIFICATE OF AUTHORIZATION: 00000696

CITY OF FORT PIERCE

SURFSIDE NEIGHBORHOOD ROADWAY IMPROVEMENTS

RIO VISTA DRIVE SIGNING AND MARKING

SHEET NO. 43

shawn.singh 4/19/2018 11:26:12 AM K:\VRB_Roadway\047922017 - Surfside Rdwy Improv\Cadd\Rdwy\PLANS_SIGN.

BEGIN SUNSET ISLE ROAD SIGNING & MARKING
STA. 201+41.44

EXIST. R/W

201 202 203 +00.00 204

CONST. 6" DOUBLE YELLOW

℄ CONST.

EUCALYPTUS AVENUE

SUNSET ISLE RD
STOP
EUCALYPTUS AVE
TO REMAIN

EXIST. R/W

EXIST. R/W

WI-IR
(30"X30")
15

STOP
BAYSHORE DR
SUNSET ISLE RD
TO BE REMOVED

WI-IR
(30"X30")
15

MATCHLINE STA. 205+00.00

N

0 10 40
Feet

EXIST. R/W

MATCHLINE STA. 205+00.00

205 206 207 208 209

+13.00 +00.00 +93.00 +73.00 +39.00 +95.00 +40.00

CONST. 6" DOUBLE YELLOW

CONST. 6" DOUBLE YELLOW

24" WHITE

24" WHITE

6" DOUBLE YELLOW

TIE TO EXISTING STRIPING

℄ CONST.

EXIST. R/W

STOP
TO REMAIN

STOP
TO REMAIN

TO REMAIN
BAYSHORE DR
STOP
PLOVER AVE

MATCHLINE STA. 210+00.00

EXIST. R/W

PLOVER AVENUE

0 10 40
Feet

REVISIONS					
DATE	BY	DESCRIPTION	DATE	BY	DESCRIPTION

Kimley»Horn
BRIAN A. GOOD, P.E.
P.E. LICENSE NUMBER 56939
445 24th STREET, SUITE 200
VERO BEACH, FL 32960
(772) 794-4100
CERTIFICATE OF AUTHORIZATION: 00000696

CITY OF FORT PIERCE

SURFSIDE NEIGHBORHOOD ROADWAY IMPROVEMENTS

BAYSHORE DRIVE SIGNING AND MARKING

SHEET NO. 44

shawn.singh 4/19/2018 11:26:23 AM K:\VRB_Roadway\047922017 - Surfside Rdwy Improv\Cadd\Rdwy\PLANS_SIGN.

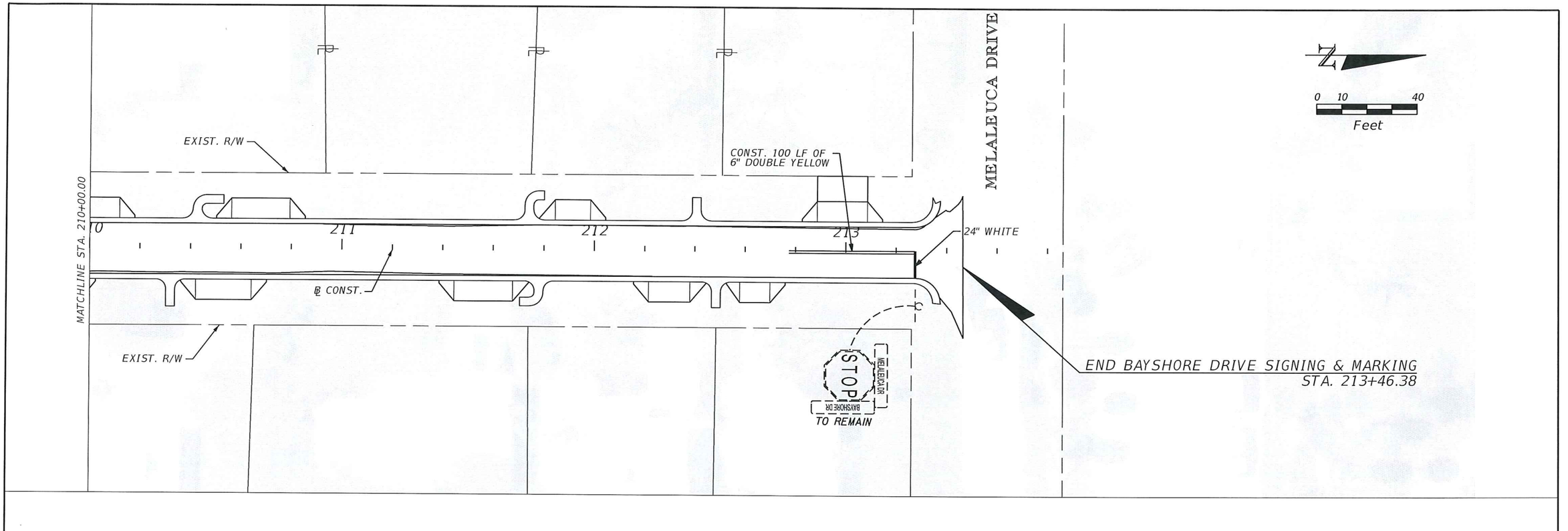

REVISIONS					
DATE	BY	DESCRIPTION	DATE	BY	DESCRIPTION

Kimley»Horn
BRIAN A. GOOD, P.E.
P.E. LICENSE NUMBER 56939
445 24th STREET, SUITE 200
VERO BEACH, FL 32960
(772) 794-4100
CERTIFICATE OF AUTHORIZATION: 00000696

CITY OF FORT PIERCE

SURFSIDE NEIGHBORHOOD ROADWAY IMPROVEMENTS

BAYSHORE DRIVE SIGNING AND MARKING

SHEET NO. 45

shawn.singh 4/19/2018 11:26:35 AM K:\VRB_Roadway\047922017 - Surfside Rdwy Improv\Cadd\Rdwy\PLANS_SIGN.

CHANGE ORDER NO. 6

Furnish and Install Asphaltic Concrete
2018 Street Resurfacing

Bid No. 2016-016

DATE: February 5, 2019

CONTRACTOR: Lynch Paving and Construction Company

OWNER: City of Fort Pierce

ORIGINAL CONTRACT AMOUNT	:	$ 250,000.00
CURRENT CONTRACT AMOUNT INCLUDING PREVIOUS CHANGE ORDERS	:	$ 1,179,044.21
NET CONTRACT AMOUNT **INCREASE** RESULTING FROM THIS CHANGE ORDER	:	**$ 1,017,583.85**
PROPOSED CONTRACT AMOUNT INCLUDING THIS CHANGE ORDER	:	**$ 2,196,628.06**
CURRENT CONTRACT EXPIRATION DATE	:	July 28, 2019
CONTRACT EXPIRATION DATE ADJUSTED BY THIS CHANGE ORDER	:	July 28, 2019

CHANGES ORDERED:

I. GENERAL:

This Change Order includes compensation for construction of roadway and drainage improvements for portions of Bayshore Drive, Sunset Isle, and Rio Vista Drive utilizing the referenced unit price contract.

All CONDITIONS, SUPPLEMENTARY CONDITIONS, SPECIFICATIONS, and all parts of the Project Manual listed in Article 1, Definitions, of the GENERAL CONDITIONS, apply to and govern all the Work under this Change Order.

II. REQUIRED CHANGES/COST ADJUSTMENTS:

Bayshore Drive

Pay Item No.	*Description*	*Unit*	*Quantity*	*Unit Price*	*Total*
101-1A	Mobilization/Demobilization	LS	1	$59,550.00	$59,550.00
102-1A	Maintenance of Traffic	LS	1	$27,060.00	$27,060.00
104-2A	Prevention, Control & Abatement of Erosion and Water Pollution	LS	1	$7,500.00	$7,500.00
110-1-1A	Standard clearing & grubbing	LS	1	$49,215.00	$49.215.00
110-7-1A	Mailbox (F&I)	EA	1	$250.00	$250.00
110-7-2A	Mailbox (remove & reset)	EA	22	$150.00	$3,300.00
120-1A	Excavation	LS	1	$12,180.00	$12,180.00
285-701A	Optional Base Group 1 (4”Coquina)	SY	554	$19.25	$10,664.50
327-70-6A	Milling Exist Asph Pavt (1.5” Ave Depth)	SY	2857	$2.95	$8,428.15
334-1-13A1	Superpave Asphaltic Concrete (TRC) (SP-9.5) (Var.,1.5”Min.)	TN	436	$117.50	$51,230.00

334-1-13A2	Superpave Asphaltic Concrete (TRC) (B-12.5) (10.5")	TN	64	$191.00	$12,224.00
520-3A	Valley Gutter- Conc.	LF	2217	$17.50	$38,797.50
522-2A	Driveway Apron Conc (6" thick w/Fiber Mesh) (3,000 PSI Min.)	SY	629	$46.76	$29,412.04
570-1-2A	Performance truf Sod (Floratam)	SY	2957	$9.00	$26,613.00
711-11-125A	Thermoplastic traffic striping (24" white)	LF	39	$25.00	$975.00
711-16-211A	Thermoplastic Traffic Striping (6" yellow)	LF	150	$9.00	$1,350.00

Rio Vista Drive

Pay Item No.	***Description***	***Unit***	***Quantity***	***Unit Price***	***Total***
101-1B	Mobilization/Demobilization	LS	1	$99,800.00	$99,800.00
102-2B	Maintenance of Traffic	LS	1	$43,500.00	$43,500.00
104-2B	Prevention, Control & Abatement of erosion an water pollution	LS	1	$9,500.00	$9,500.00
110-1-1B	Standard clearing & grubbing	LS	1	$47,670.00	$47,670.00
110-7-1B	Mailbox (F&I)	EA	4	$250.00	$1,000.00
110-7-2B	Mailbox (remove & reset)	EA	35	$150.00	$5,250.00
120-1B	Excavation	LS	1	$24,950.00	$24,950.00
285-701B	Optional Base Group 1 (4"Coquina)	SY	854	$14.70	$12,553.80

327-70-6B	Milling Exist Asph Pavt (1.5" Ave Depth)	SY	3814	2.30	$8,772.20
334-1-13B1	Superpave Asphaltic Concrete (TRC) (SP-9.5) (Var.,1.5"Min.)	TN	831	$113.10	$93,986.10
334-1-13B2	Superpave Asphaltic Concrete (TRC) (B-12.5) (10.5")	TN	489	$141.00	$68,949.00
425-17-01B	Inlet Valley Gutter	EA	4	$6,600.00	$26,400.00
430-174-118B	Pipe Culvert, HDPE, 18" Round	LE	18	$49.50	$891.00
443-70-4B	French Drain, 18" HDPE	LF	422	$131.00	$55,282.00
520-3B	Valley Gutter – Conc.	LF	3754	$17.50	$65,695.00
522-2B	Driveway Apron Conc (6"thick w/Fiber Mesh) (3,000 PSI MIN.)	SY	1431	$46.76	$66,913.56
570-1-2B1	Performance Truf Sod (Floratam)	SY	4738	$9.00	$42,642.00
570-1-2B2	Performance Truf Sod (Bermuda)	SY	270	$9.00	$2,430.00
711-11-125B	Thermoplastic Traffic Striping (24" white)	LF	52	$25.00	$1,300.00
711-16-211B	Thermoplastic Traffic Striping (6" yellow)	LF	150	$9.00	$1,350.00
					$1,017,513.85

III. JUSTIFICATION:

This project will provide roadway and drainage improvements for certain roadways in the Surfside Park neighborhood

IV. PAYMENT:

This change order work will increase the existing contract price by $1,017,583.85 which will be funded by the SMU Account No. 403-4300-538-3490.

V. APPROVAL AND CHANGE AUTHORIZATION:

Acknowledgments: The aforementioned change, and work affected thereby, is subject to all provisions of the original contract not specifically changed by this Change Order; and it is expressly understood and agreed that the approval of the Change Order shall have no effect on the original Contract other than the matters expressly provided herein.

RECOMMENDED BY:

John R. Andrews, P.E.
City Engineer

By: _____
Signature

Date: _____

APPROVED AS TO FORM AND CORRECTNESS:

Peter J. Sweeney
City Attorney

By: _____
Signature

Date: _____

APPROVED BY:

Linda Hudson
Mayor

By: _____
Signature

Date: _____

ACCEPTED BY:

Robert P. Gent, Vice-President
Lynch Paving and Construction Company

By: _____
Signature

Date: _____

City Commission Regular Meeting **11.e.**

Meeting Date: 02/19/2019

Re: Approval of Johnson-Davis, Inc. Change Order No. 4 - $421,910 - Ref. Bid No. 2017-014

Submitted For: John Andrews, City Engineer, Engineering

SUBJECT:

Approval of a $421,910.00 construction contract issued to Johnson-Davis, Inc. as required for emergency construction restoration of a portion of Edwards Road Canal (Canal No. 9) situated between Oleander Avenue and Sunrise Boulevard.

SUMMARY:

Hurricane Irma caused canal damage to approxiamtely 325 LF of the Edwards Road Canal (Canal No. 9) situated between 1029 Trinidad Avenue and 1035 Trinidad Avenue. The proposed work includes the enclosure of approximately 325 LF of canal utilizing 72" and 84" reinforced concrete pipe as opposed to the original proposed bank stabilization with the installation of cable revetment mats. The canal enclosure is required due to insufficient canal right-of-way width.

This project is funded under the previously approved NRCS Contract Agreement No. NR194209XXXXC001 as approved by the City Commission on November 19, 2018. This Agreement provides funding in the amount equivalent to 75% of the construction cost or $316,425 along with administrative/engineering funding in the amount of $46,410.10 for a total project funding of $362,835.10.

RECOMMENDATION:

Staff recommends approval

ALTERNATIVES:

Forgo the grant funding and don't initiate the restoration work

RESPONSIBLE STAFF:

Engineering

COORDINATED WITH:

USDA NRCS Emergency Watershed Protection Program

Fiscal Impact

Budgeted Y/N:	N/A
Fiscal Year:	N/A
Account:	403-4300-538-3490

Amount: $421,910.00

FISCAL IMPACT:

The initial construction cost shall be encumbered from SMU Revenue Account No 403-4300-538-3490 with NRCS reimbursement in the amount of $316,432.50 to follow.

Attachments

CO No. 4

Engineering Construction Plans

Form Review

Inbox	Reviewed By	Date
Finance Department	Johnna Morris	02/13/2019 11:07 AM
City Manager	Nick Mimms	02/14/2019 08:46 AM
Form Started By: Tracy Telle		Started On: 02/05/2019 02:18 PM
Final Approval Date: 02/14/2019		

CHANGE ORDER NO. 4

UNIT PRICE CONTRACT FOR STORMWATER UTILITY INFRASTRUCTURE REPAIRS

Bid No. 2017-024

PROJECT: EDWARDS ROAD CANAL (CANAL NO. 9) EMERGENCY DRAINAGE REPAIRS

DATE: February 1, 2019

CONTRACTOR: Johnson-Davis, Inc.

OWNER: City of Fort Pierce

ORIGINAL 2018 ANNUAL CONTRACT AMOUNT	:	$ 200,000.00
CURRENT CONTRACT AMOUNT INCLUDING PREVIOUS CHANGE ORDERS	:	$ 3,552,626.88
NET CONTRACT AMOUNT **INCREASE** RESULTING FROM THIS CHANGE ORDER	:	**$ 421,910.00**
PROPOSED ANNUAL CONTRACT AMOUNT INCLUDING THIS CHANGE ORDER	:	**$ 3,974,536.88**
PROJECT EXPIRATION DATE	:	July 5, 2019

CHANGES ORDERED:

I. GENERAL:

This Change Order includes compensation for enclosing 325 LF of a portion of Edwards Road Canal (Canal No. 9) as located on the south side of the properties situated between 1029 Trinidad Avenue and 1035 Trinidad Avenue. During Hurricane Irene this canal sustained damage to the canal banks and as part of the USDA Natural Resources Conservation Service (NRCS) Emergency Watershed Protection Program, grant funding was made available for the repairs. The proposed work includes installation of 84", 72" and 36" RCP culvert, two (2) concrete headwalls, and a Type "D" drainage inlet. All CONDITIONS, SUPPLEMENTARY CONDITIONS, SPECIFICATIONS, and all parts of the Project Manual listed in Article 1, Definitions, of the GENERAL CONDITIONS, apply to and govern all the Work under this Change Order.

II. REQUIRED CHANGES/COST ADJUSTMENTS:

Description	*Unit*	*Qty*	*Unit Price*	*Amount*
1. Mobilization/Bond/General Conditions	LS	1	$20,000.00	$20,000.00
2. Maintenance of Traffic	LS	1	$2,000.00	$2,000.00
3. Clearing & Grubbing	LS	1	$23,000.00	$23,000.00
4. Canal Excavation	CY	2,512	$5.00	$12,560.00
5. Erosion and Sediment Control	LS	1	$1,750.00	$1,750.00
6. Construction Layout/Record Drawings	LS	1	$4,500.00	$4,500.00
7. Embankment	CY	3,200	$15.00	$48,000.00
8. Performance and Payment Bond	LS	1	$6,000.00	$6,000.00
9. Class II Concrete (Endwall)	CY	44	$1,500.00	$66,000.00
10. Reinforcing Steel	LB	3,900	$2.00	$7,800.00
11. 36" RCP (Class III)	LF	8	$300.00	$2,400.00
12. 72" RCP (Class III)	LF	80	$450.00	$36,000.00
13. 84" RCP (Class III)	LF	264	$600.00	$158,400.00
14. Type "D" DBI w/ Double Traversable Slot and J Bottom	EA	1	$12,500.00	$12,500.00

19. Bahia Sod w/ Grading	SY	3,500	$6.00	$21,000.00
NET INCREASE BY THIS CHANGE ORDER				**$421,910.00**

III. JUSTIFICATION:

The work will prevent the continued erosion of the canal banks in this area.

IV. PAYMENT:

This change order work will increase the existing Unit Price Stormwater Infrastructure Repairs Contract by $421,900. **Funding shall be encumbered from SMU Revenue Account No. 403-4300-538-3490 with NRCS reimbursement in the amount of $316,425.00 (75% of construction cost)**

V. APPROVAL AND CHANGE AUTHORIZATION:

Acknowledgments: The aforementioned change, and work affected thereby, is subject to all provisions of the original contract not specifically changed by this Change Order; and it is expressly understood and agreed that the approval of the Change Order shall have no effect on the original Contract other than the matters expressly provided herein.

RECOMMENDED BY:

John R. Andrews, P.E.
City Engineer

By: _____
Signature

Date: 2/5/19

APPROVED AS TO FORM AND CORRECTNESS:

Peter J. Sweeney
City Attorney

By: _____
Signature

Date: _____

APPROVED BY:

Linda Hudson
Mayor

By: _____
Signature

Date: _____

ACCEPTED BY:

Scott J. Johnson, President
Johnson-Davis, Inc.

By: _____ Scott J. Johnson Pres
Signature

Date: 2/4/19

CONTRACT PLANS

EDWARDS ROAD CANAL REHABILITATION

INDEX OF PLANS

SHEET NO.	SHEET DESCRIPTION
1	KEY SHEET
2	GENERAL NOTES
3	SUMMARY OF PAY ITEMS
4	PLAN AND PROFILE
5	MISCELLANEOUS DETAILS
6-8	CROSS SECTIONS

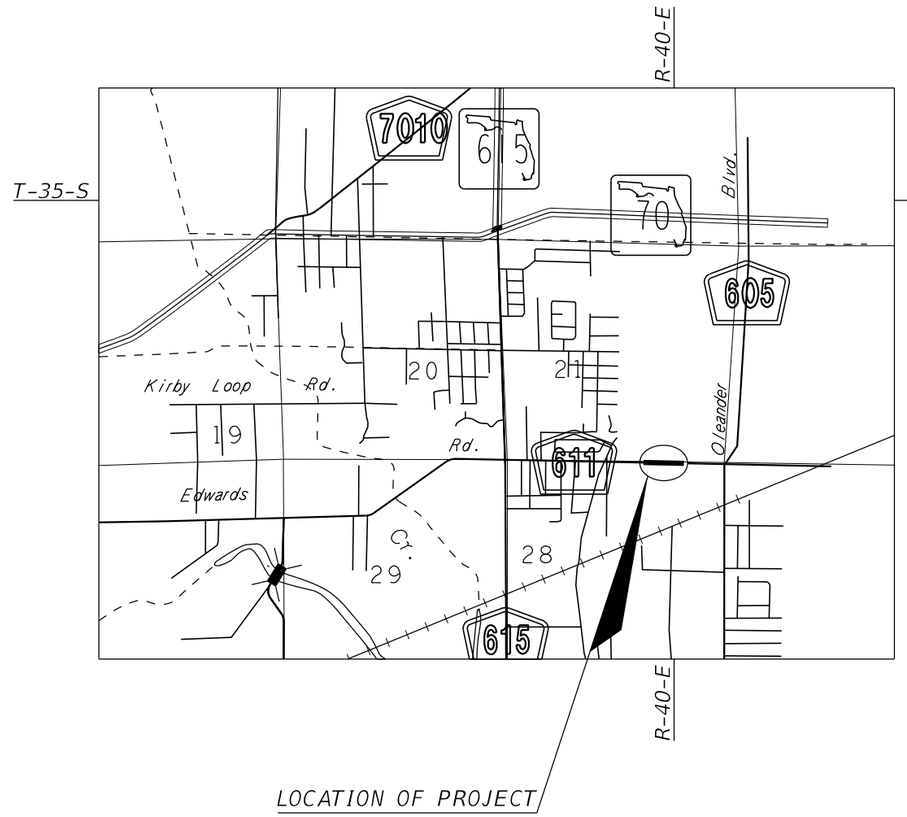

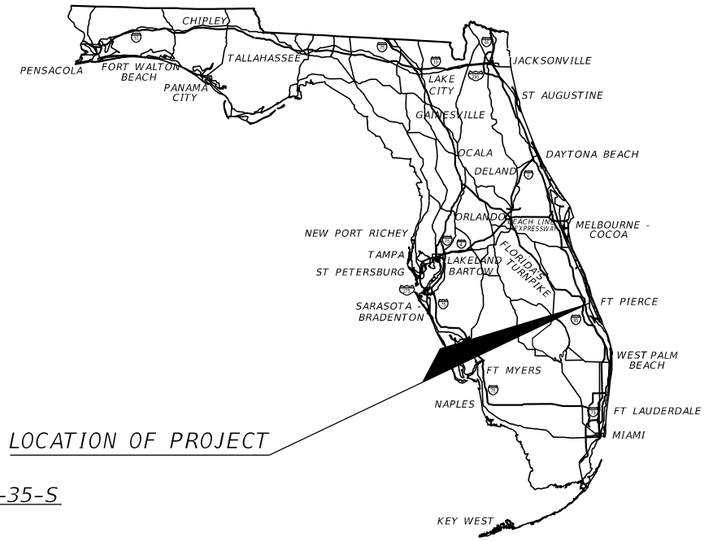

ROADWAY SHOP DRAWINGS
TO BE SUBMITTED TO:

KIMLEY-HORN AND ASSOCIATES, INC.
BRIAN GOOD, P.E.
445 24th STREET, SUITE 200
VERO BEACH, FLORIDA 32960

PLANS PREPARED BY:

Kimley»Horn

445 24th STREET, SUITE 200
VERO BEACH, FL 32960
TEL (772) 794-4100
PROJECT NUMBER: 047922019
CERTIFICATE OF AUTHORIZATION: 00000696

ROADWAY PLANS
ENGINEER OF RECORD: BRIAN GOOD, P.E.

P.E. NO.: 56939

NOTE: THE SCALE OF THESE PLANS MAY HAVE CHANGED DUE TO REPRODUCTION.

100%
SUBMITTAL
JANUARY 2019

811
Know what's **below.**
Call before you dig.

PREPARED FOR:

CITY OF FORT PIERCE

NRCS PROJECT NO. NR194209XXXXC001

SHEET NO. 1

GENERAL NOTES

1. ALL CONSTRUCTION AND MATERIALS SHALL CONFORM TO APPLICABLE STANDARDS AND SPECIFICATIONS OF THE CITY OF FORT PIERCE, FLORIDA STANDARD CONTRACT DOCUMENTS AND SPECIFICATIONS FOR PUBLIC WORK PROJECTS, LATEST ISSUE.

2. CONSTRUCTION DETAILS SHALL BE IN ACCORDANCE WITH STATE OF FLORIDA DEPARTMENT OF TRANSPORTATION STANDARD PLANS LATEST ISSUE AND THE CITY OF FT. PIERCE STANDARD DETAILS.

3. THE INFORMATION PROVIDED IN THESE DRAWINGS IS SOLELY TO ASSIST THE CONTRACTOR IN ASSESSING THE NATURE AND EXTENT OF CONDITIONS WHICH WILL BE ENCOUNTERED DURING THE COURSE OF WORK. THE CONTRACTORS ARE DIRECTED, PRIOR TO BIDDING, TO CONDUCT WHATEVER INVESTIGATIONS THEY DEEM NECESSARY TO ARRIVE AT THEIR OWN CONCLUSION REGARDING THE ACTUAL CONDITIONS THAT WILL BE ENCOUNTERED, AND UPON WHICH BIDS WILL BE BASED.

4. LOCATIONS, ELEVATIONS AND DIMENSIONS OF EXISTING UTILITIES AND OTHER FEATURES ARE SHOWN ACCORDING TO THE BEST INFORMATION AVAILABLE AT THE TIME OF THE PREPARATION OF THESE PLANS. THE CONTRACTOR SHALL VERIFY THE LOCATIONS, ELEVATIONS, AND OTHER FEATURES AFFECTING HIS/HER WORK PRIOR TO CONSTRUCTION, AND NOTIFY THE CITY OF FORT PIERCE, ENGINEERING DEPARTMENT IMMEDIATELY WHEN CONFLICT BETWEEN DRAWINGS AND ACTUAL CONDITIONS ARE DISCOVERED. THE CONTRACTOR SHALL WORK AS NEEDED TO AVOID CONFLICT WITH EXISTING UTILITIES (NO ADDITIONAL COST SHALL BE PAID FOR THIS WORK). EXISTING UTILITIES SHALL BE MAINTAINED IN SERVICE DURING CONSTRUCTION UNLESS OTHERWISE APPROVED BY THE UTILITY OWNER.

PRE-TRENCHING IN THE ALIGNMENT AND GRADE OF PROPOSED PIPES, STRUCTURES, CONDUITS AND/OR SUB-GRADE SHALL BE PERFORMED FOURTEEN DAYS IN ADVANCE OF ITS CONSTRUCTION. THE CONTRACTOR SHALL PROVIDE UNDERGROUND UTILITY OWNERS AND THE CITY WITH A FOURTEEN DAY ADVANCE NOTICE OF ANY CONFLICT WITH PROPOSED CONSTRUCTION. PAYMENT FOR PRE-TRENCHING, SURVEY, AND BACKFILLING SHALL BE INCLUDED IN THE UNIT COST OF THE RELATED BID ITEM FOR WORK BEING DONE.

5. THE CONTRACTOR SHALL COORDINATE WITH UTILITIES TO ARRANGE RELOCATION AND TEMPORARY SUPPORT OF UTILITY FEATURES, ETC. AS NECESSARY TO COMPLETE THE WORK.

6. IT SHALL BE THE CONTRACTOR'S RESPONSIBILITY TO LOCATE AND PROTECT ANY AND ALL EXISTING UTILITIES ON THIS PROJECT. THE CONTRACTOR WILL RECEIVE NO DIRECT PAYMENT TO SUPPORT AND/OR PROTECT ANY AND ALL UTILITIES. PAYMENT FOR THIS WORK SHALL BE INCLUDED IN THE UNIT COST OF THE RELATED BID ITEM FOR WORK BEING DONE.

7. THE CONTRACTOR SHALL GIVE AT LEAST 48 HOURS NOTICE TO UTILITY COMPANIES TO PROVIDE FOR THE LOCATION OF EXISTING UNDERGROUND UTILITIES IN ADVANCE OF CONSTRUCTION. CONTACT UTILITIES NOTIFICATION CENTER AT 1-800-432-4770.

8. THE CONTRACTOR IS REQUIRED TO OBTAIN ALL APPLICABLE CONSTRUCTION PERMITS PRIOR TO START OF CONSTRUCTION.

9. THE CONTRACTOR SHALL NOTIFY THE CITY OF FORT PIERCE, ENGINEERING DEPARTMENT AND CITY'S FIELD REPRESENTATIVE, AT LEAST 48 HOURS PRIOR TO CONSTRUCTION.

10. THE CONTRACTOR SHALL CONTACT THE CITY OF FORT PIERCE, ENGINEERING DEPARTMENT AND CITY'S FIELD REPRESENTATIVE IMMEDIATELY OF ANY CONFLICT ARISING DURING CONSTRUCTION OF ANY IMPROVEMENTS SHOWN ON THESE DRAWINGS.

11. B.M. DATA IS NORTH AMERICAN VERTICAL DATUM OF 1988 (NAVD 88).

ANY NAVD 88 MONUMENT WITHIN THE LIMITS OF CONSTRUCTION IS TO BE PROTECTED.
IF IN DANGER OF BEING DAMAGE, NOTIFY:
GEODETIC INFORMATION CENTER
ATTN: MARK MAINTENANCE SECTION N/CG-162
6001 EXECUTIVE BLVD.
ROCKVILLE MARYLAND 20852

12. EXISTING SECTION CORNERS AND 1/4 SECTION CORNERS, AND OTHER LAND MARKERS OR MONUMENTS LOCATED WITHIN PROPOSED CONSTRUCTION ARE TO BE REFERENCED BY THE CONTRACTOR PRIOR TO CONSTRUCTION AND RESET AFTER CONSTRUCTION USING REGISTERED LAND SURVEYOR LICENSED IN THE STATE OF FLORIDA.

13. STORM SEWER PIPE LENGTHS SHOWN ARE APPROXIMATE, AND MAY BE ADJUSTED AS REQUIRED UPON APPROVAL BY THE CITY OF FORT PIERCE, ENGINEERING DEPARTMENT.

14. INSTALLATION OF ALL STORM SEWERS, INLETS, MANHOLES AND APPURTENANCES SHALL BE IN ACCORDANCE WITH THE REQUIREMENTS OF THE CITY OF FORT PIERCE, ENGINEERING DEPARTMENT AS INDICATED ON THE DRAWINGS. ALL REINFORCED CONCRETE PIPE SHALL BE CLASS III PIPE.

15. ALL CATCH BASINS AND PIPE INVERTS SHALL BE AS INDICATED ON THE DRAWINGS.

16. CONTRACTOR SHALL ADJUST ALL UTILITY LIDS AND COVERS TO FINISHED GRADE AS REQUIRED.

17. ALL COMPLETED DRAINAGE STRUCTURES SHALL BE PROTECTED FROM CONTAMINATION BY SILT AND CONSTRUCTION DEBRIS. THE CONTRACTOR SHALL PLACE PLYWOOD ON, OR FILTER FABRIC BETWEEN FRAME AND INLET GRATE UNTIL CONSTRUCTION OPERATIONS ARE COMPLETED. ALL DRAINAGE STRUCTURES (EXISTING AND PROPOSED) WITHIN PROJECT LIMITS SHALL BE CLEANED PRIOR TO FINAL ACCEPTANCE. PAYMENT FOR THIS WORK SHALL BE INCLUDED IN THE UNIT COST OF THE RELATED BID ITEM FOR WORK BEING DONE.

18. THE CONTRACTOR SHALL REPLACE ALL PAVING, STABILIZING EARTH, DRIVEWAYS, SIDEWALKS, ETC. WITH THE SAME TYPE OF MATERIAL THAT WAS REMOVED DURING CONSTRUCTION OR AS DIRECTED BY THE CITY OF FORT PIERCE FIELD ENGINEER.

19. THE CONTRACTOR SHALL NOT ENCROACH INTO PRIVATE PROPERTY WITH PERSONNEL, MATERIAL OR EQUIPMENT WITHOUT WRITTEN PERMISSION FROM THE PROPERTY OWNER.

20. REGARDING MAIL BOXES, WALLS, FENCES, SECURITY GATE TRACKING, OR OTHER PRIVATE PROPERTY OR IMPROVEMENTS THAT SHALL BE TEMPORARILY RELOCATED AND REPLACED, THE CONTRACTOR SHALL COORDINATE WITH THE APPROPRIATE OWNER. ANY AND ALL COSTS ASSOCIATED WITH COORDINATING, REMOVING, AND REPLACING ANY PROPERTY ITEMS SHALL BE INCLUDED IN THE UNIT COST OF THE RELATED BID ITEM FOR WORK BEING DONE.

21. CONTRACTOR SHALL PROVIDE MAINTENANCE OF TRAFFIC IN ACCORDANCE WITH FDOT INDEX 600 SERIES, MUTCD AND THESE PLANS. THE CONTRACTOR SHALL MAINTAIN AT ALL TIMES VEHICULAR AND PEDESTRIAN ACCESS TO ALL RESIDENCES AND/OR BUSINESS.

22. COMPLETE 'AS-BUILT' INFORMATION RELATIVE TO LOCATION, SIZE AND DEPTH OF NEW PIPES, MANHOLES, INLETS, ETC., SHALL BE ACCURATELY RECORDED BY THE CONTRACTOR AND SUBMITTED (SIGNED AND SEALED BY A FLORIDA CERTIFIED P.L.S.) TO THE CITY OF FORT PIERCE, ENGINEERING DEPARTMENT PRIOR TO FINAL ACCEPTANCE OF THE WORK. ALL RECORD INFORMATION ON EXISTING UTILITY CROSSINGS ENCOUNTERED DURING CONSTRUCTION, INCLUDING BUT NOT LIMITED TO PIPES, INLETS, MANHOLE, ETC., SHALL BE RECORDED BY A FLORIDA REGISTERED SURVEYOR AND SHOWN ON THE RECORD DRAWINGS. THE COST OF SIGNED AND SEALED AS-BUILTS SHALL BE INCLUDED IN OVERALL BID AND NO ADDITIONAL COMPENSATION WILL BE ALLOWED.

23. THE CONTRACTOR SHALL BE RESPONSIBLE FOR MAINTAINING THE INTEGRITY OF AND MAKING THE REPAIRS OF EXISTING PAVEMENT, SIDEWALKS, PIPES, CONDUITS, CURBS, CABLES, ETC., WHETHER OR NOT SHOWN ON THE PLANS DAMAGED AS A RESULT OF THE CONTRACTORS OPERATIONS AND/OR THOSE OF HIS SUBCONTRACTORS, AND SHALL RESTORE THEM PROMPTLY AT NO ADDITIONAL EXPENSE TO THE OWNER OR THE CITY OF FORT PIERCE. CONTRACTOR SHALL REPORT ANY DAMAGE TO SIDEWALK, DRIVEWAY, ETC., PRIOR TO BEGINNING WORK IN ANY AREA.

24. ALL DRAINAGE PIPES SHALL BE APPROVED BY CITY OF FORT PIERCE ENGINEERING DEPARTMENT. THE CONTRACTOR SHALL CONSTRUCT A FILTER FABRIC JACKET AT ALL PROPOSED STORM SEWER JOINTS AS PER FDOT INDEX 280. COST OF FILTER FABRIC JACKET SHALL BE INCLUDED IN UNIT PIPE COSTS.

25. EXISTING DRAINAGE STRUCTURES AND CULVERTS ARE TO REMAIN UNLESS OTHERWISE NOTED.

26. STAGING AND MATERIAL STORAGE SHALL NOT BE CONDUCTED ON ABUTTING PRIVATE PROPERTY WITHOUT WRITTEN APPROVAL FROM THE OWNER. STAGING AND STORAGE SHALL BE CONDUCTED WITHIN PUBLIC R/W AND/OR CONSTRUCTION EASEMENTS (ACCESS LICENSE AGREEMENTS).

27. EXISTING UTILITY CONTACT INFORMATION:

UTILITY COMPANY	CONTACT	PHONE NUMBER	ADDRESS
AT&T DISTRIBUTION	MARK GUTIERREZ	772-460-4443	3300 OKEECHOBEE RD FORT PIERCE, FL 34947
COMCAST CABLE	WILSON LOPEZ	772-940-9310	N/A
FORT PIERCE UTILITY AUTHORITY (WATER/SEWER)	RICHARD MUTTERBACK	772-466-1600 x3425	1701 S 37TH ST FORT PIERCE, FL 34947
CITY OF FORT PIERCE (ELECTRIC/GAS)	PAUL LAGUERRE	772-466-1600 x6757	1701 S 37TH ST FORT PIERCE, FL 34947

28. EROSION CONTROL MEASURES SHALL BE TAKEN BY CONTRACTOR DURING CONSTRUCTION AS PER FDOT STANDARDS:

A. SILT FENCE SHALL BE INSTALLED ALONG THE ENTIRE PERIMETER OF THE PROJECT ADJACENT TO ANY SOIL DISTURBING ACTIVITIES.

B. ALL DRAINAGE STRUCTURES ARE TO BE PROTECTED DURING CONSTRUCTION PER FDOT STANDARDS.

C. ALL FENCING, GRADING, SIGNING AND SODDING SHALL BE MAINTAINED DURING THE CONTRACT LIFE. ALL DAMAGED WORK SHALL BE RESTORED AT NO COST TO THE CITY.

29. NON-STRUCTURAL CONCRETE UTILIZED IN CURB AND GUTTER, SIDEWALK AND URBAN FLARED TURNOUT CONSTRUCTION SHALL CONSIST OF 3000 PSI FIBER REINFORCED MIX.

REVISIONS					
DATE	BY	DESCRIPTION	DATE	BY	DESCRIPTION

Kimley»Horn
BRIAN A. GOOD, P.E.
P.E. LICENSE NUMBER 56939
445 24th STREET, SUITE 200
VERO BEACH, FL 32960
(772) 794-4100
CERTIFICATE OF AUTHORIZATION: 00000696

CITY OF FORT PIERCE

EDWARDS ROAD
CANAL REHABILITATION

GENERAL NOTES

SHEET NO. 2

SUMMARY OF PAY ITEM

PAY ITEM NO.	DESCRIPTION	UNIT	PROJECT QUANTITY
	ROADWAY PAY ITEMS		
101-1	MOBILIZATION/ DEMOBILIZATION	LS	1
102-1	MAINTENANCE OF TRAFFIC	LS	1
104-2	PREVENTION, CONTROL & ABATEMENT OF EROSION AND WATER POLLUTION	LS	1
108-1	CONSTRUCTION LAYOUT/ RECORD DRAWINGS	LS	1
110-1-1	CLEARING & GRUBBING	LS	1
120-1	REGULAR EXCAVATION	CY	2,512
120-6	EMBANKMENT	CY	7,201
400-2-2	CLASS II CONCRETE (ENDWALL)	CY	44.0
415-1-1	REINFORCING STEEL (ROADWAY)	LB	3,900
425-1-544	TYPE 'D' DBI W/ DOUBLE TRAVERSABLE SLOTS AND J-BOTTOM (>10')	EA	1
430-175-136	CONCRETE PIPE CULVERT (36" RCP) (S/CD) (CL III)	LF	8
430-175-172	CONCRETE PIPE CULVERT (72" RCP) (S/CD) (CL III)	LF	80
430-175-184	CONCRETE PIPE CULVERT (84" RCP) (S/CD) (CL III)	LF	264
570-1-2A	PERFORMANCE TURF (SOD) (BAHIA)	SY	3,500

PAY ITEM FOOTNOTES

110-1-1 COST TO INCLUDE, BUT NOT LIMITED TO, ALL MANPOWER, EQUIPMENT, HAULING, LEVELING OF TERRAIN AND PROPER DISPOSAL OF MATERIAL/VEGETATION AS DESCRIBED WITHIN PLANS. COST TO INCLUDE REMOVAL, DISPOSAL AND CAPPING EXISTING 6" CIP WM.

120-6 COST TO INCLUDE, BUT NOT LIMITED TO, ALL MATERIAL, EQUIPMENT, HAULING, PLACING AND COMPACTING OF MATERIAL AS DESCRIBED WITHIN THE PLANS. EMBANKMENT SHALL CONSIST OF FDOT SELECT MATERIAL AND SHALL BE COMPACTED TO 100% STANDARD PROCTOR MAX. DENSITY PER FM 1-T099, METHOD C. MATERIAL SHALL BE COMPACTED IN 6" LIFTS.

425-1-544 COST TO INCLUDE, BUT LIMITED TO, MATERIAL AND LABOR ASSOCIATED WITH CONCRETE INLET PAVEMENT.

570-1-2A COST TO INCLUDE, BUT NOT LIMITED TO, PEGGING ALL SOD PLACED ON A SLOPE STEEPER THAN 3:1.

REVISIONS					
DATE	BY	DESCRIPTION	DATE	BY	DESCRIPTION

Kimley»Horn
BRIAN A. GOOD, P.E.
P.E. LICENSE NUMBER 56939
445 24th STREET, SUITE 200
VERO BEACH, FL 32960
(772) 794-4100
CERTIFICATE OF AUTHORIZATION: 00000696

CITY OF FORT PIERCE

EDWARDS ROAD
CANAL REHABILITATION

SUMMARY OF PAY ITEM

SHEET NO. 3

TRINIDAD AVENUE

EXIST. R/W

ADDRESS:
1039 TRINIDAD AVE
FORT PIERCE, FL 34982

ADDRESS:
1035 TRINIDAD AVE
FORT PIERCE, FL 34982

PROP. LINE
(TYP.)

ADDRESS:
1033 TRINIDAD AVE
FORT PIERCE, FL 34982

S-99
STA. 101+34.00, 2.92' LT
CONST. STRAIGHT CONC. HEADWALL
FDOT INDEX NO. 430-034
TOP OF HW EL = 19.00
FL INV. = 8.00

ADDRESS:
1031 TRINIDAD AVE
FORT PIERCE, FL 34982

S-100
STA. 103+99.87, 0.70' LT
CONST. TYPE 'D' DBI W/ DOUBLE
TRAVERSABLE SLOTS AND J-BOTTOM
FDOT INDEX NO. 425-010,-052
GRATE EL = 18.65
S INV. = 10.25
E INV. = 8.15
W INV. = 8.15
BOTTOM EL = 7.15

ADDRESS:
1029 TRINIDAD AVE
FORT PIERCE, FL 34982

S-101
STA. 104+81.43, 6.90' RT
CONST. STRAIGHT CONC. HEADWALL
FDOT INDEX NO. 430-033
TOP OF HW EL = 19.00
FL INV. = 8.20

ADDRESS:
1023 TRINIDAD AVE
FORT PIERCE, FL 34982

N

0 10 40
Feet

EXIST. R/W

A B C D E

EXIST. TREES TO REMAIN

EXIST. FENCE TO REMAIN

CONST. 264 LF OF 84" RCP

EXIST. R/W

CONST. 80 LF OF 72" RCP

EXIST. FENCE TO REMAIN

EXIST. FENCE TO REMAIN

EXIST. R/W

S-99

S-100

S-101

4 FT CHAIN LINK FENCE

6 FT WOOD FENCE

6 FT WOOD FENCE

4 FT CHAIN LINK FENCE

EL 19.00
EL 15.00
EL 10.00

101 102 103 104 105 106

TR OAK 14 TR OAK 14 TR PALM 14

6" CIP WM (ABANDONED)

6" CIP WM (ABANDONED)

EL 10.00
EL 15.00
EL 19.00

EL 19.00
EL 15.00
EL 10.00

EL 10.00
EL 15.00
EL 19.00

℄ CONST.

CONST. 6" CAP

CONTRACTOR SHALL REMOVE AND CAP EXIST. 6" CIP WM (ABANDONED) WITHIN LIMITS OF HEADWALL AND CULVERT IMPROVEMENTS

102 TOPO PT

103 TOPO PT

CONST. CONC. COLLAR AS PER INDEX 430-001

36" RCP

DRAINAGE MANHOLE RIM=19.60

CONST. 8 LF OF 36" RCP

CONST. 6" CAP

BEGIN PROP. IMPROVEMENTS
BEGIN CLEARING & GRUBBING
STA. 100+80.00

END PROP. IMPROVEMENTS
END CLEARING & GRUBBING
STA. 105+38.00

LEGEND
FLOW ARROWS

EDWARDS ROAD

PROP. GRADE LINE

19.00 18.75 18.70 18.65 19.00

S-99 S-100 S-101

18 14 10 6

36" RCP

84" RCP

72" RCP

EXIST. GRADE LINE @ ℄ CONST.

TIE TO EXIST. GRADE

TIE TO EXIST. GRADE

SCALE: HOR.: 1" = 40'
VER.: 1" = 4'

101+00 102+00 103+00 104+00 105+00 106+00

REVISIONS

DATE	BY	DESCRIPTION	DATE	BY	DESCRIPTION

Kimley»Horn
BRIAN A. GOOD, P.E.
P.E. LICENSE NUMBER 56939
445 24th STREET, SUITE 200
VERO BEACH, FL 32960
(772) 794-4100
CERTIFICATE OF AUTHORIZATION: 00000696

CITY OF FORT PIERCE

EDWARDS ROAD
CANAL REHABILITATION

PLAN & PROFILE

SHEET NO.
4

zaid.ajlani 1/21/2019 10:45:20 AM K:\VRB_Roadway\047922019 - Edwards Rd Canal\CADD\RDWY\PLANS_ROADWAY\PLANRD01.dgn

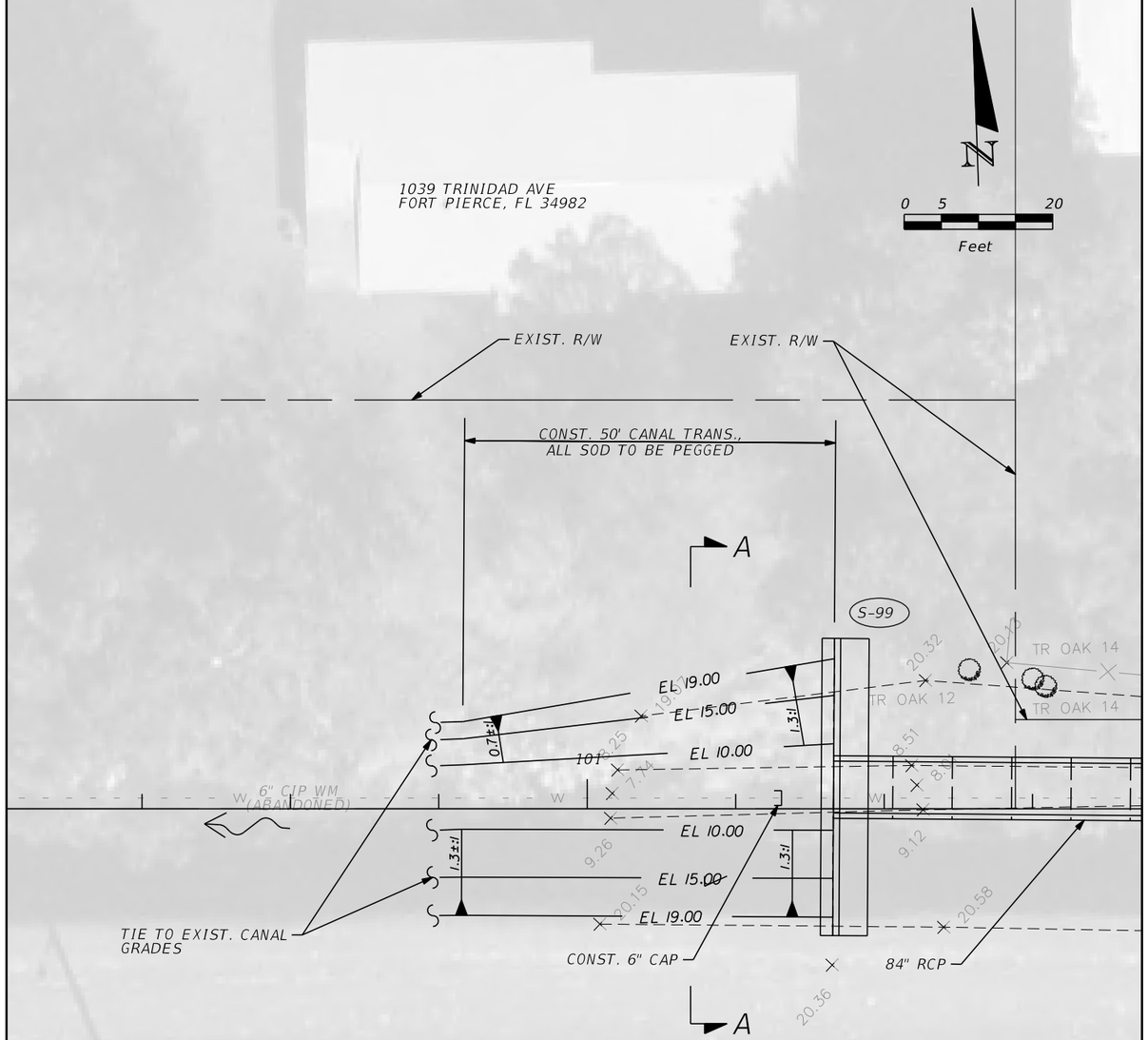

EDWARDS ROAD

WESTERN HEADWALL GRADING DETAIL

SCALE: 1" = 20'

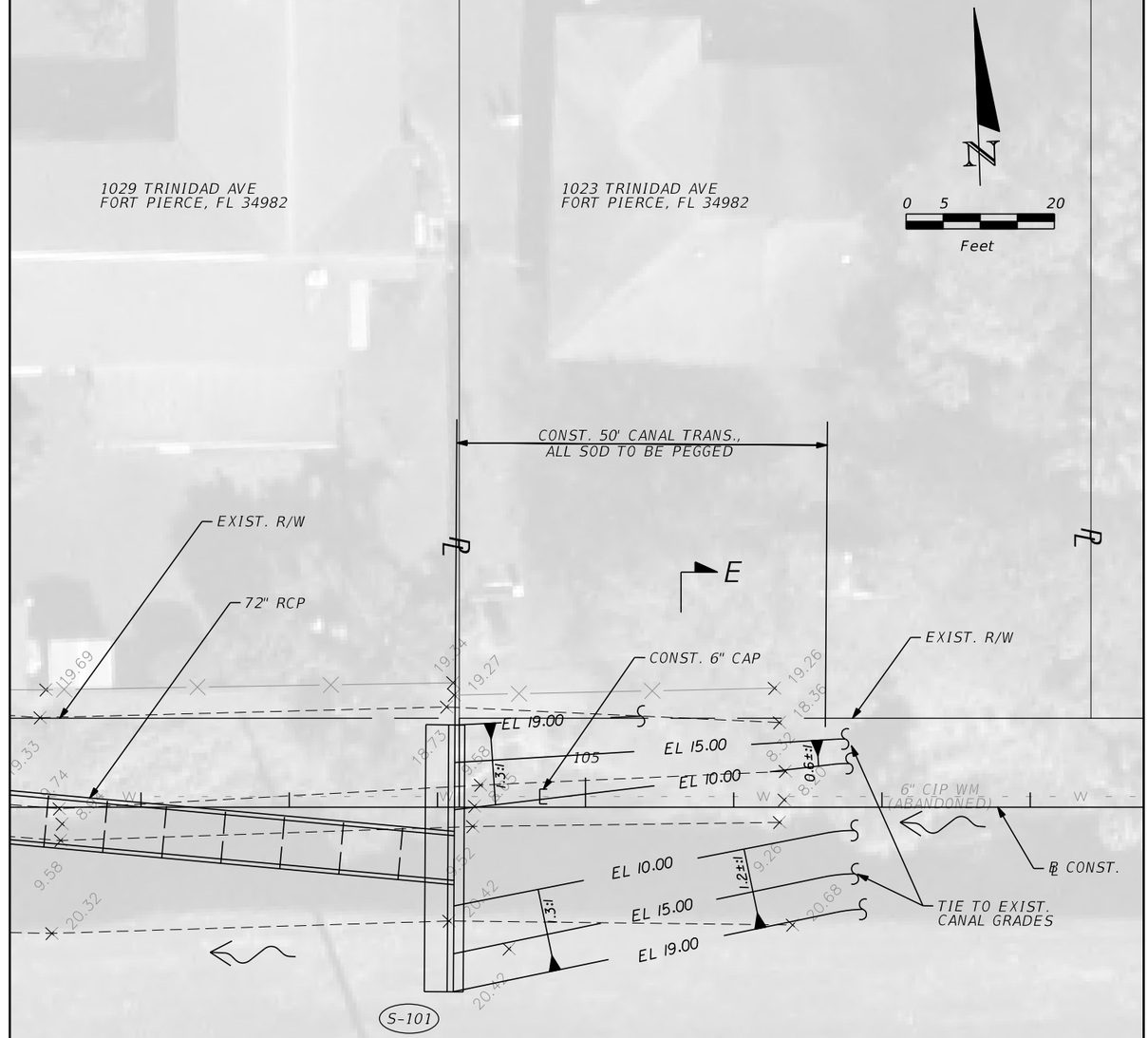

EDWARDS ROAD

EASTERN HEADWALL GRADING DETAIL

SCALE: 1" = 20'

REVISIONS					
DATE	BY	DESCRIPTION	DATE	BY	DESCRIPTION

Kimley»Horn
BRIAN A. GOOD, P.E.
P.E. LICENSE NUMBER 56939
445 24th STREET, SUITE 200
VERO BEACH, FL 32960
(772) 794-4100
CERTIFICATE OF AUTHORIZATION: 00000696

CITY OF FORT PIERCE

EDWARDS ROAD
CANAL REHABILITATION

MISCELLANEOUS DETAILS

SHEET NO. 5

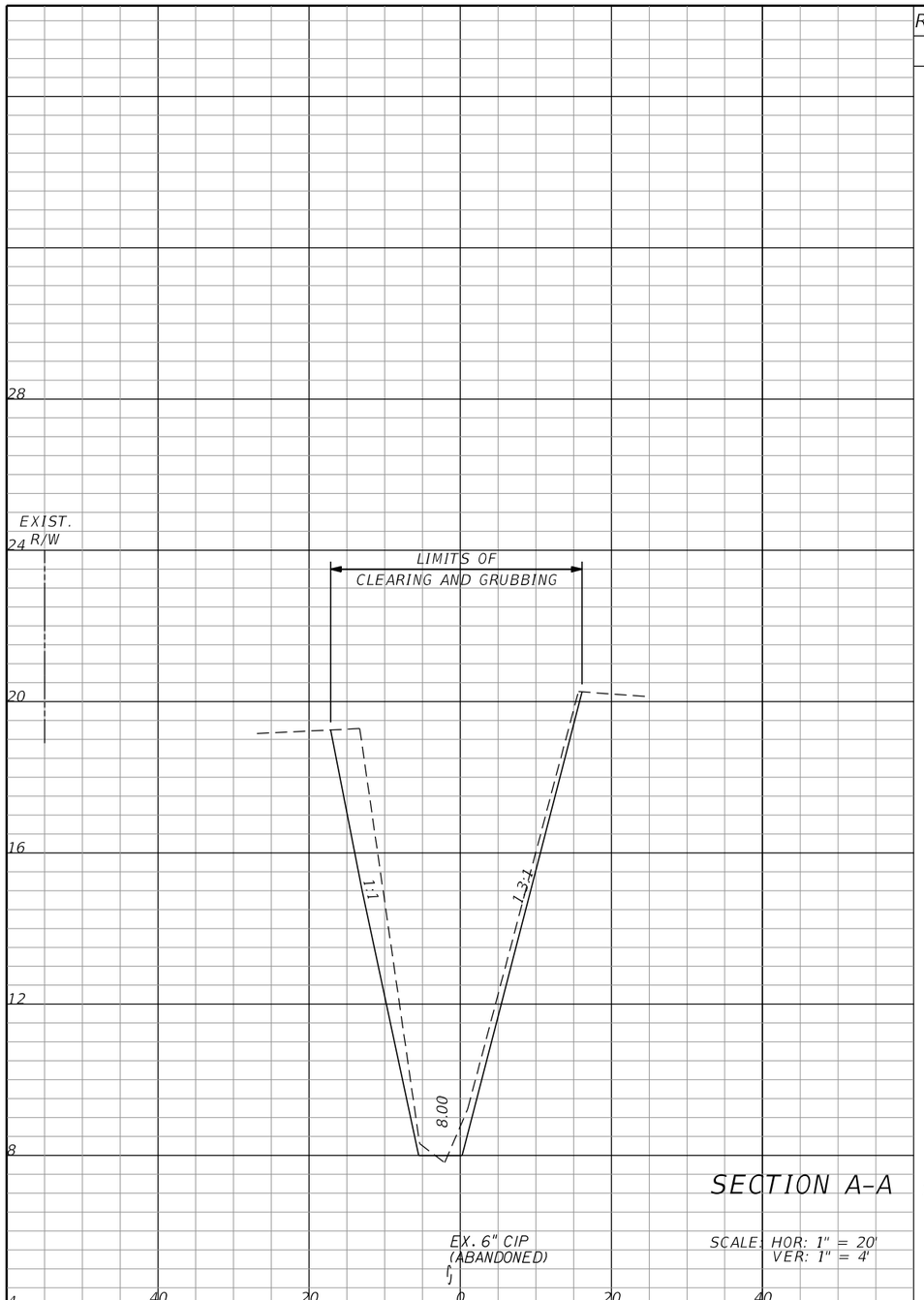

SECTION A-A

SCALE: HOR: 1" = 20'
VER: 1" = 4'

EX. 6" CIP
(ABANDONED)

BEGIN EARTHWORK
STA. 100+78.97

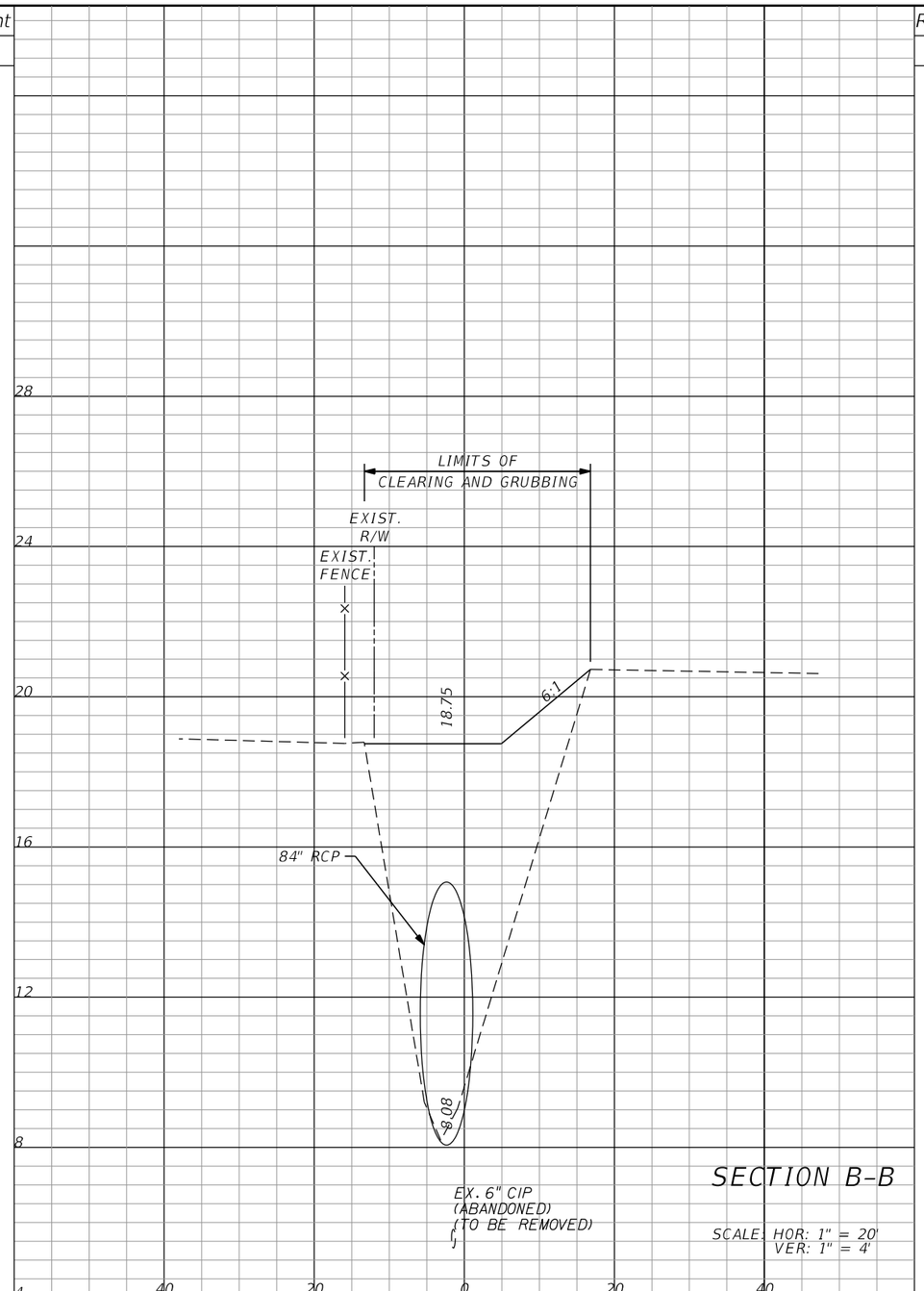

SECTION B-B

SCALE: HOR: 1" = 20'
VER: 1" = 4'

EX. 6" CIP
(ABANDONED)
(TO BE REMOVED)

BEGIN EARTHWORK
STA. 101+34.00

Regular Exc.		Embankment	
A	V	A	V
173.2		0.8	
	224.5		1.0
173.2		0.8	
	0		0
10.6		634	
	294.4		1017

REVISIONS

DATE	BY	DESCRIPTION	DATE	BY	DESCRIPTION

Kimley»Horn
BRIAN A. GOOD, P.E.
P.E. LICENSE NUMBER 56939
445 24TH STREET, SUITE 200
VERO BEACH, FL 32960
(772) 794-4100
CERTIFICATE OF AUTHORIZATION: 00000696

CITY OF FORT PIERCE

EDWARDS ROAD
CANAL REHABILITATION

CROSS SECTIONS

SHEET NO. 6

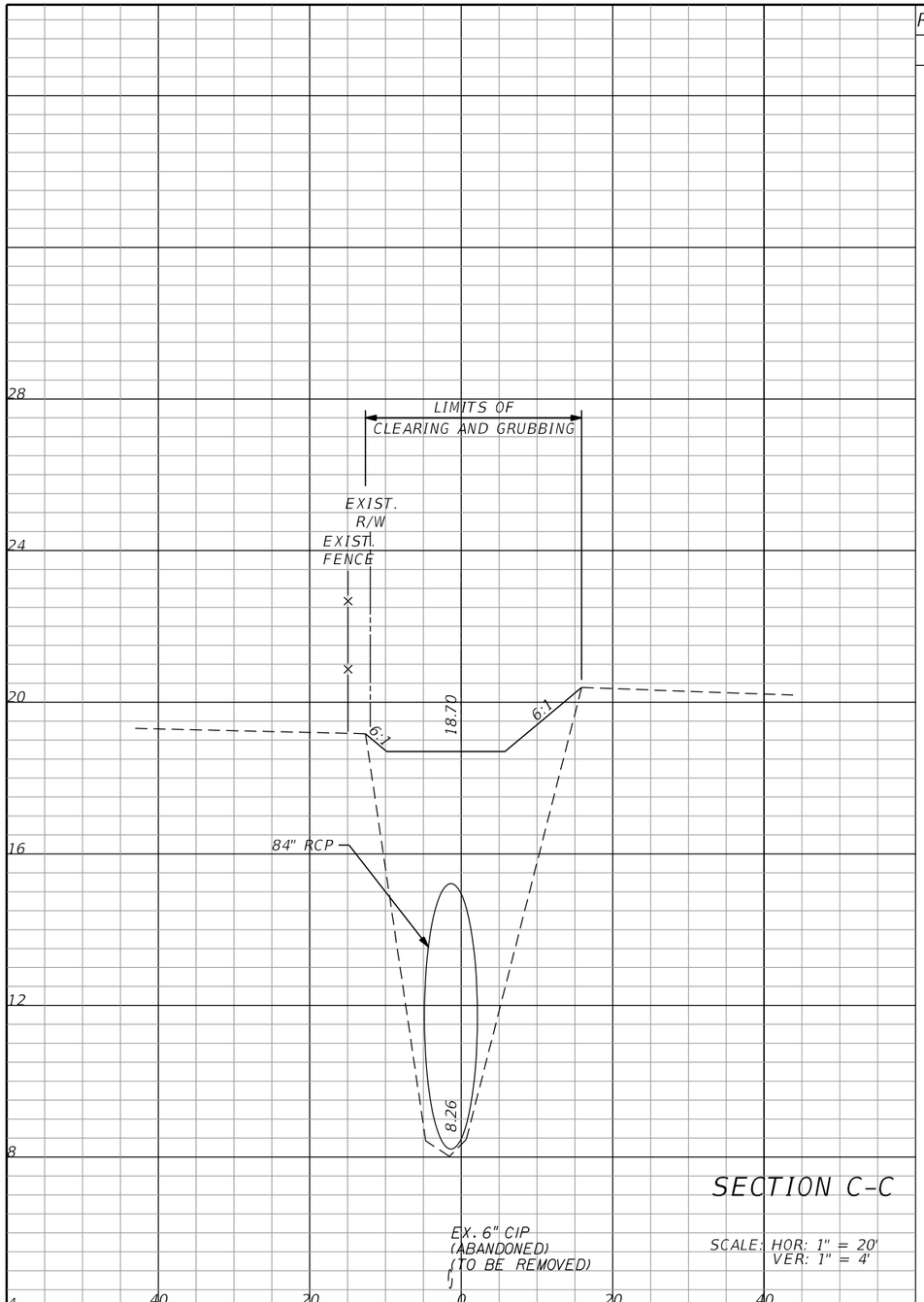

SECTION C-C

SCALE: HOR: 1" = 20'
VER: 1" = 4'

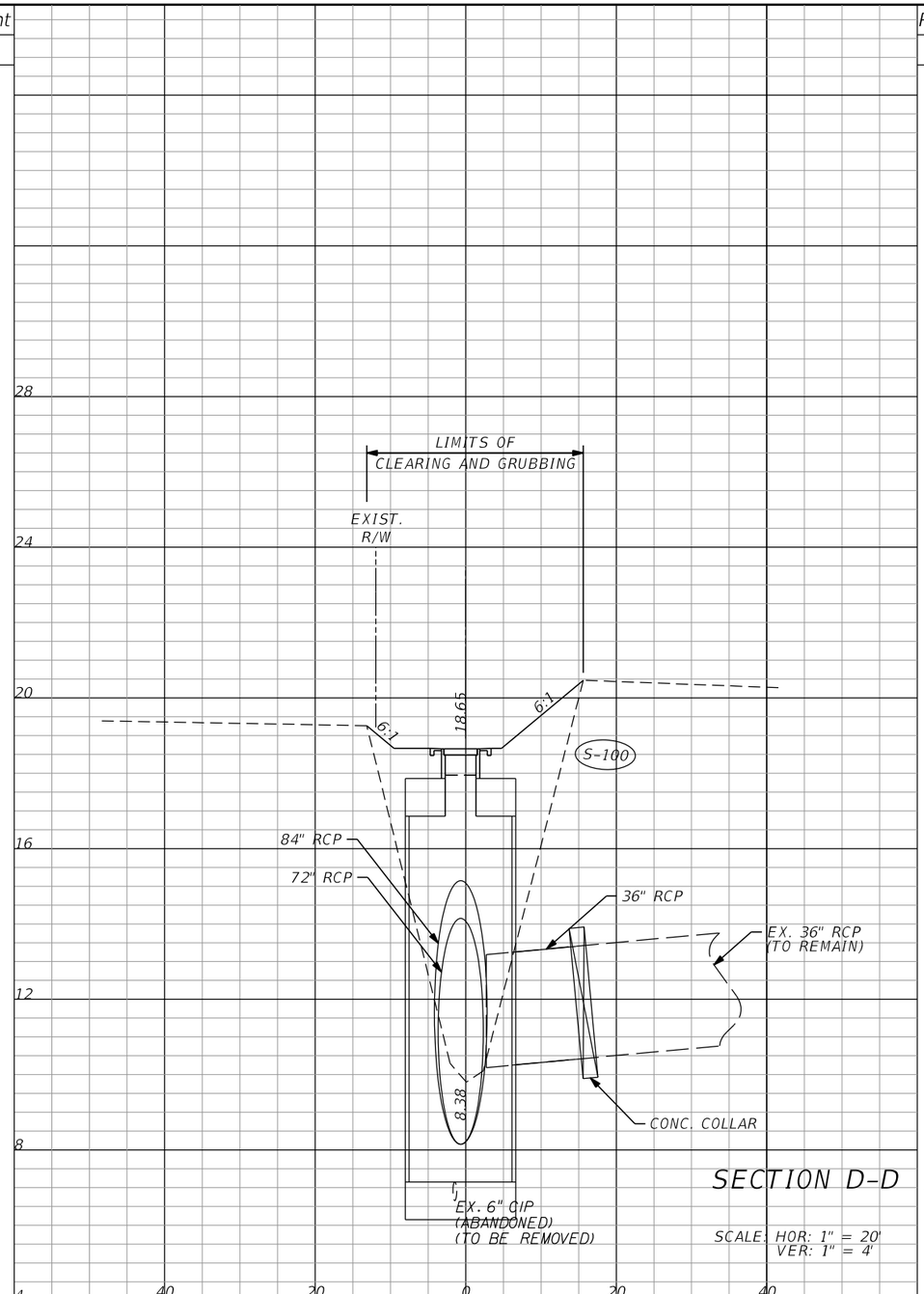

SECTION D-D

SCALE: HOR: 1" = 20'
VER: 1" = 4'

Regular Exc.		Embankment	
A	V	A	V
0	654.3	356.1	586.8
23.8	2892	527.6	1839

REVISIONS					
DATE	BY	DESCRIPTION	DATE	BY	DESCRIPTION

Kimley»Horn
BRIAN A. GOOD, P.E.
P.E. LICENSE NUMBER 56939
445 24TH STREET, SUITE 200
VERO BEACH, FL 32960
(772) 794-4100
CERTIFICATE OF AUTHORIZATION: 00000696

CITY OF FORT PIERCE

EDWARDS ROAD
CANAL REHABILITATION

CROSS SECTIONS

SHEET NO. 7

END EARTHWORK
STA. 105+36.29

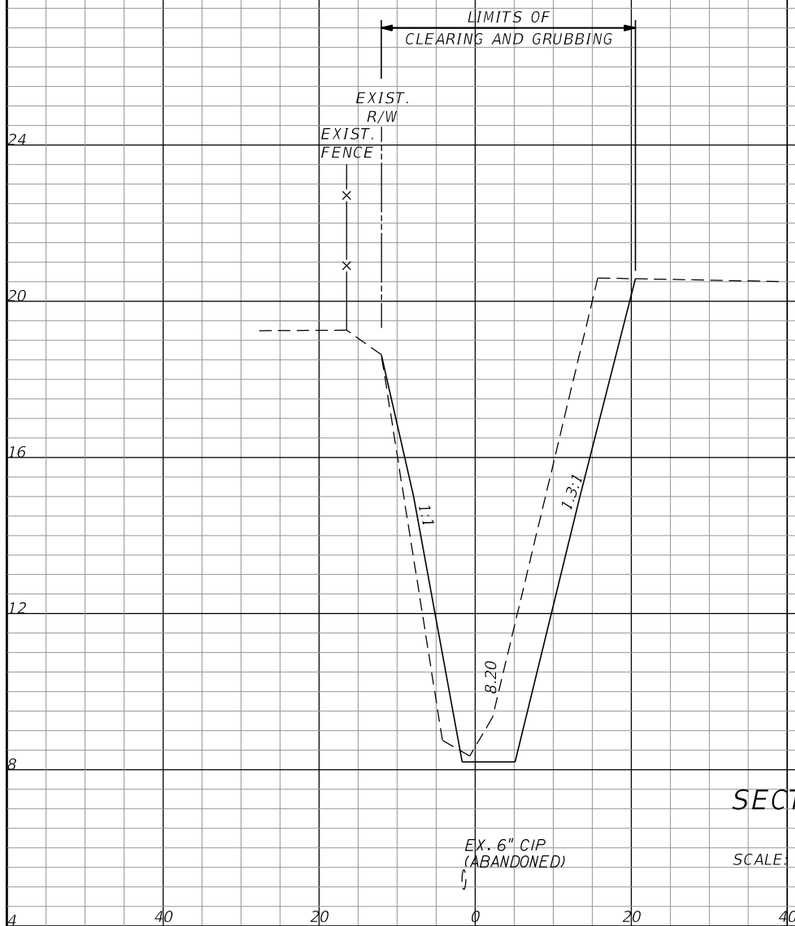

SECTION E-E

SCALE: HOR: 1" = 20'
VER: 1" = 4'

Regular Exc.		Embankment	
A	V	A	V
283.6		97.1	
	122.7		42.1
283.6		97.1	
	1319		1410

Regular Exc.		Embankment	
A	V	A	V

REVISIONS

DATE	BY	DESCRIPTION	DATE	BY	DESCRIPTION

Kimley»Horn
BRIAN A. GOOD, P.E.
P.E. LICENSE NUMBER 56939
445 24TH STREET, SUITE 200
VERO BEACH, FL 32960
(772) 794-4100
CERTIFICATE OF AUTHORIZATION: 00000696

CITY OF FORT PIERCE

EDWARDS ROAD
CANAL REHABILITATION

CROSS SECTIONS

SHEET NO.
8

City Commission Regular Meeting **11.f.**

Meeting Date: 02/19/2019

Re: Kimley-Horn Specific Authorization No. 6 (RFQ 2013-005) - Edwards Road Canal (Canal No. 9) Design Changes

Submitted For: John Andrews, City Engineer, Engineering

SUBJECT:

Approval of Specific Authorization No. 6 in an amount not to exceed $11,120.00 (reimbursed by USDA NRCS) for professional engineering services relating to modifications to the original engineering design of Canal No. 9.

SUMMARY:

The original design of the canal bank stabilization of 325 LF of Canal No. 9, commonly referred to as Edwards Road Canal, is not acheivable due to the limited canal right-of-way and therefore, Engineering staff requested the enclosure of this canal utilizing 72" and 84" RCP pipe culvert as indicated on the approved plan.

RECOMMENDATION:

Staff recommends approval

ALTERNATIVES:

Forgo the project and surrender the previously allocated USDA NRCS disaster funding grant money

RESPONSIBLE STAFF:

Engineering

COORDINATED WITH:

Public Works

Fiscal Impact

Budgeted Y/N:	N/A
Fiscal Year:	N/A
Account:	403-4300-538-3490
Amount:	$11,120.00

FISCAL IMPACT:

The $11,120.00 engineering fee will initially encumbered from the above referenced SMU account with 100% reimbursement by USDA NRCS.

Attachments

Canal No. 9 Engineering Plans

SA No. 6

Form Review

Inbox	Reviewed By	Date
Finance Department	Johnna Morris	02/13/2019 11:07 AM
City Manager	Nick Mimms	02/14/2019 08:47 AM
Form Started By: Tracy Telle		Started On: 02/05/2019 12:20 PM
Final Approval Date: 02/14/2019		

CONTRACT PLANS

EDWARDS ROAD CANAL REHABILITATION

INDEX OF PLANS

SHEET NO.	SHEET DESCRIPTION
1	KEY SHEET
2	GENERAL NOTES
3	SUMMARY OF PAY ITEMS
4	PLAN AND PROFILE
5	MISCELLANEOUS DETAILS
6-8	CROSS SECTIONS

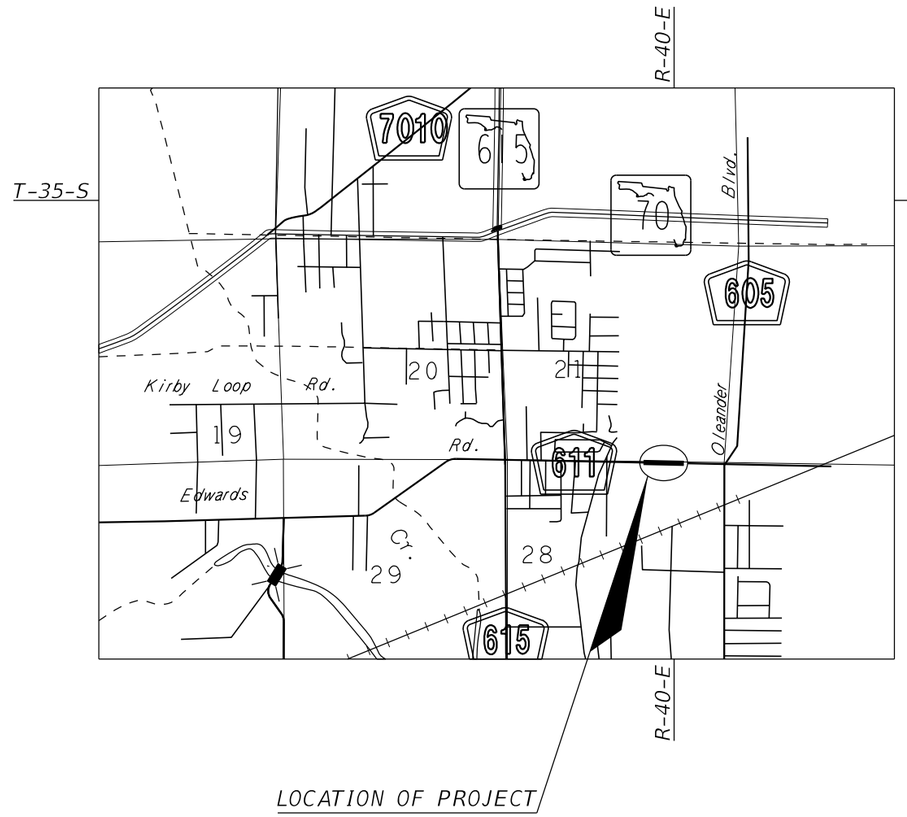

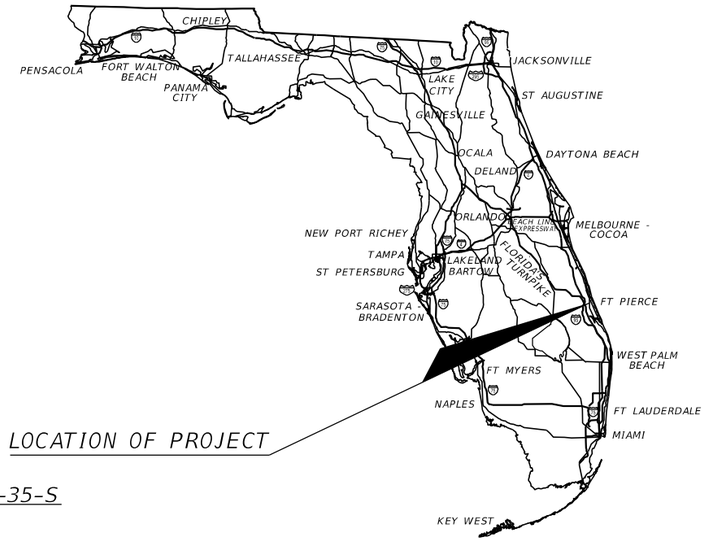

ROADWAY SHOP DRAWINGS
TO BE SUBMITTED TO:

KIMLEY-HORN AND ASSOCIATES, INC.
BRIAN GOOD, P.E.
445 24th STREET, SUITE 200
VERO BEACH, FLORIDA 32960

PLANS PREPARED BY:

Kimley»Horn

445 24th STREET, SUITE 200
VERO BEACH, FL 32960
TEL (772) 794-4100
PROJECT NUMBER: 047922019
CERTIFICATE OF AUTHORIZATION: 00000696

ROADWAY PLANS
ENGINEER OF RECORD: BRIAN GOOD, P.E.

P.E. NO.: 56939

NOTE: THE SCALE OF THESE PLANS MAY HAVE CHANGED DUE TO REPRODUCTION.

100%
SUBMITTAL
JANUARY 2019

811
Know what's **below.**
Call before you dig.

PREPARED FOR:

CITY OF FORT PIERCE

NRCS PROJECT NO. NR194209XXXXC001

SHEET NO. 1

GENERAL NOTES

1. ALL CONSTRUCTION AND MATERIALS SHALL CONFORM TO APPLICABLE STANDARDS AND SPECIFICATIONS OF THE CITY OF FORT PIERCE, FLORIDA STANDARD CONTRACT DOCUMENTS AND SPECIFICATIONS FOR PUBLIC WORK PROJECTS, LATEST ISSUE.

2. CONSTRUCTION DETAILS SHALL BE IN ACCORDANCE WITH STATE OF FLORIDA DEPARTMENT OF TRANSPORTATION STANDARD PLANS LATEST ISSUE AND THE CITY OF FT. PIERCE STANDARD DETAILS.

3. THE INFORMATION PROVIDED IN THESE DRAWINGS IS SOLELY TO ASSIST THE CONTRACTOR IN ASSESSING THE NATURE AND EXTENT OF CONDITIONS WHICH WILL BE ENCOUNTERED DURING THE COURSE OF WORK. THE CONTRACTORS ARE DIRECTED, PRIOR TO BIDDING, TO CONDUCT WHATEVER INVESTIGATIONS THEY DEEM NECESSARY TO ARRIVE AT THEIR OWN CONCLUSION REGARDING THE ACTUAL CONDITIONS THAT WILL BE ENCOUNTERED, AND UPON WHICH BIDS WILL BE BASED.

4. LOCATIONS, ELEVATIONS AND DIMENSIONS OF EXISTING UTILITIES AND OTHER FEATURES ARE SHOWN ACCORDING TO THE BEST INFORMATION AVAILABLE AT THE TIME OF THE PREPARATION OF THESE PLANS. THE CONTRACTOR SHALL VERIFY THE LOCATIONS, ELEVATIONS, AND OTHER FEATURES AFFECTING HIS/HER WORK PRIOR TO CONSTRUCTION, AND NOTIFY THE CITY OF FORT PIERCE, ENGINEERING DEPARTMENT IMMEDIATELY WHEN CONFLICT BETWEEN DRAWINGS AND ACTUAL CONDITIONS ARE DISCOVERED. THE CONTRACTOR SHALL WORK AS NEEDED TO AVOID CONFLICT WITH EXISTING UTILITIES (NO ADDITIONAL COST SHALL BE PAID FOR THIS WORK). EXISTING UTILITIES SHALL BE MAINTAINED IN SERVICE DURING CONSTRUCTION UNLESS OTHERWISE APPROVED BY THE UTILITY OWNER.

PRE-TRENCHING IN THE ALIGNMENT AND GRADE OF PROPOSED PIPES, STRUCTURES, CONDUITS AND/OR SUB-GRADE SHALL BE PERFORMED FOURTEEN DAYS IN ADVANCE OF ITS CONSTRUCTION. THE CONTRACTOR SHALL PROVIDE UNDERGROUND UTILITY OWNERS AND THE CITY WITH A FOURTEEN DAY ADVANCE NOTICE OF ANY CONFLICT WITH PROPOSED CONSTRUCTION. PAYMENT FOR PRE-TRENCHING, SURVEY, AND BACKFILLING SHALL BE INCLUDED IN THE UNIT COST OF THE RELATED BID ITEM FOR WORK BEING DONE.

5. THE CONTRACTOR SHALL COORDINATE WITH UTILITIES TO ARRANGE RELOCATION AND TEMPORARY SUPPORT OF UTILITY FEATURES, ETC. AS NECESSARY TO COMPLETE THE WORK.

6. IT SHALL BE THE CONTRACTOR'S RESPONSIBILITY TO LOCATE AND PROTECT ANY AND ALL EXISTING UTILITIES ON THIS PROJECT. THE CONTRACTOR WILL RECEIVE NO DIRECT PAYMENT TO SUPPORT AND/OR PROTECT ANY AND ALL UTILITIES. PAYMENT FOR THIS WORK SHALL BE INCLUDED IN THE UNIT COST OF THE RELATED BID ITEM FOR WORK BEING DONE.

7. THE CONTRACTOR SHALL GIVE AT LEAST 48 HOURS NOTICE TO UTILITY COMPANIES TO PROVIDE FOR THE LOCATION OF EXISTING UNDERGROUND UTILITIES IN ADVANCE OF CONSTRUCTION. CONTACT UTILITIES NOTIFICATION CENTER AT 1-800-432-4770.

8. THE CONTRACTOR IS REQUIRED TO OBTAIN ALL APPLICABLE CONSTRUCTION PERMITS PRIOR TO START OF CONSTRUCTION.

9. THE CONTRACTOR SHALL NOTIFY THE CITY OF FORT PIERCE, ENGINEERING DEPARTMENT AND CITY'S FIELD REPRESENTATIVE, AT LEAST 48 HOURS PRIOR TO CONSTRUCTION.

10. THE CONTRACTOR SHALL CONTACT THE CITY OF FORT PIERCE, ENGINEERING DEPARTMENT AND CITY'S FIELD REPRESENTATIVE IMMEDIATELY OF ANY CONFLICT ARISING DURING CONSTRUCTION OF ANY IMPROVEMENTS SHOWN ON THESE DRAWINGS.

11. B.M. DATA IS NORTH AMERICAN VERTICAL DATUM OF 1988 (NAVD 88).

ANY NAVD 88 MONUMENT WITHIN THE LIMITS OF CONSTRUCTION IS TO BE PROTECTED.
IF IN DANGER OF BEING DAMAGE, NOTIFY:
GEODETIC INFORMATION CENTER
ATTN: MARK MAINTENANCE SECTION N/CG-162
6001 EXECUTIVE BLVD.
ROCKVILLE MARYLAND 20852

12. EXISTING SECTION CORNERS AND 1/4 SECTION CORNERS, AND OTHER LAND MARKERS OR MONUMENTS LOCATED WITHIN PROPOSED CONSTRUCTION ARE TO BE REFERENCED BY THE CONTRACTOR PRIOR TO CONSTRUCTION AND RESET AFTER CONSTRUCTION USING REGISTERED LAND SURVEYOR LICENSED IN THE STATE OF FLORIDA.

13. STORM SEWER PIPE LENGTHS SHOWN ARE APPROXIMATE, AND MAY BE ADJUSTED AS REQUIRED UPON APPROVAL BY THE CITY OF FORT PIERCE, ENGINEERING DEPARTMENT.

14. INSTALLATION OF ALL STORM SEWERS, INLETS, MANHOLES AND APPURTENANCES SHALL BE IN ACCORDANCE WITH THE REQUIREMENTS OF THE CITY OF FORT PIERCE, ENGINEERING DEPARTMENT AS INDICATED ON THE DRAWINGS. ALL REINFORCED CONCRETE PIPE SHALL BE CLASS III PIPE.

15. ALL CATCH BASINS AND PIPE INVERTS SHALL BE AS INDICATED ON THE DRAWINGS.

16. CONTRACTOR SHALL ADJUST ALL UTILITY LIDS AND COVERS TO FINISHED GRADE AS REQUIRED.

17. ALL COMPLETED DRAINAGE STRUCTURES SHALL BE PROTECTED FROM CONTAMINATION BY SILT AND CONSTRUCTION DEBRIS. THE CONTRACTOR SHALL PLACE PLYWOOD ON, OR FILTER FABRIC BETWEEN FRAME AND INLET GRATE UNTIL CONSTRUCTION OPERATIONS ARE COMPLETED. ALL DRAINAGE STRUCTURES (EXISTING AND PROPOSED) WITHIN PROJECT LIMITS SHALL BE CLEANED PRIOR TO FINAL ACCEPTANCE. PAYMENT FOR THIS WORK SHALL BE INCLUDED IN THE UNIT COST OF THE RELATED BID ITEM FOR WORK BEING DONE.

18. THE CONTRACTOR SHALL REPLACE ALL PAVING, STABILIZING EARTH, DRIVEWAYS, SIDEWALKS, ETC. WITH THE SAME TYPE OF MATERIAL THAT WAS REMOVED DURING CONSTRUCTION OR AS DIRECTED BY THE CITY OF FORT PIERCE FIELD ENGINEER.

19. THE CONTRACTOR SHALL NOT ENCROACH INTO PRIVATE PROPERTY WITH PERSONNEL, MATERIAL OR EQUIPMENT WITHOUT WRITTEN PERMISSION FROM THE PROPERTY OWNER.

20. REGARDING MAIL BOXES, WALLS, FENCES, SECURITY GATE TRACKING, OR OTHER PRIVATE PROPERTY OR IMPROVEMENTS THAT SHALL BE TEMPORARILY RELOCATED AND REPLACED, THE CONTRACTOR SHALL COORDINATE WITH THE APPROPRIATE OWNER. ANY AND ALL COSTS ASSOCIATED WITH COORDINATING, REMOVING, AND REPLACING ANY PROPERTY ITEMS SHALL BE INCLUDED IN THE UNIT COST OF THE RELATED BID ITEM FOR WORK BEING DONE.

21. CONTRACTOR SHALL PROVIDE MAINTENANCE OF TRAFFIC IN ACCORDANCE WITH FDOT INDEX 600 SERIES, MUTCD AND THESE PLANS. THE CONTRACTOR SHALL MAINTAIN AT ALL TIMES VEHICULAR AND PEDESTRIAN ACCESS TO ALL RESIDENCES AND/OR BUSINESS.

22. COMPLETE 'AS-BUILT' INFORMATION RELATIVE TO LOCATION, SIZE AND DEPTH OF NEW PIPES, MANHOLES, INLETS, ETC., SHALL BE ACCURATELY RECORDED BY THE CONTRACTOR AND SUBMITTED (SIGNED AND SEALED BY A FLORIDA CERTIFIED P.L.S.) TO THE CITY OF FORT PIERCE, ENGINEERING DEPARTMENT PRIOR TO FINAL ACCEPTANCE OF THE WORK. ALL RECORD INFORMATION ON EXISTING UTILITY CROSSINGS ENCOUNTERED DURING CONSTRUCTION, INCLUDING BUT NOT LIMITED TO PIPES, INLETS, MANHOLE, ETC., SHALL BE RECORDED BY A FLORIDA REGISTERED SURVEYOR AND SHOWN ON THE RECORD DRAWINGS. THE COST OF SIGNED AND SEALED AS-BUILTS SHALL BE INCLUDED IN OVERALL BID AND NO ADDITIONAL COMPENSATION WILL BE ALLOWED.

23. THE CONTRACTOR SHALL BE RESPONSIBLE FOR MAINTAINING THE INTEGRITY OF AND MAKING THE REPAIRS OF EXISTING PAVEMENT, SIDEWALKS, PIPES, CONDUITS, CURBS, CABLES, ETC., WHETHER OR NOT SHOWN ON THE PLANS DAMAGED AS A RESULT OF THE CONTRACTORS OPERATIONS AND/OR THOSE OF HIS SUBCONTRACTORS, AND SHALL RESTORE THEM PROMPTLY AT NO ADDITIONAL EXPENSE TO THE OWNER OR THE CITY OF FORT PIERCE. CONTRACTOR SHALL REPORT ANY DAMAGE TO SIDEWALK, DRIVEWAY, ETC., PRIOR TO BEGINNING WORK IN ANY AREA.

24. ALL DRAINAGE PIPES SHALL BE APPROVED BY CITY OF FORT PIERCE ENGINEERING DEPARTMENT. THE CONTRACTOR SHALL CONSTRUCT A FILTER FABRIC JACKET AT ALL PROPOSED STORM SEWER JOINTS AS PER FDOT INDEX 280. COST OF FILTER FABRIC JACKET SHALL BE INCLUDED IN UNIT PIPE COSTS.

25. EXISTING DRAINAGE STRUCTURES AND CULVERTS ARE TO REMAIN UNLESS OTHERWISE NOTED.

26. STAGING AND MATERIAL STORAGE SHALL NOT BE CONDUCTED ON ABUTTING PRIVATE PROPERTY WITHOUT WRITTEN APPROVAL FROM THE OWNER. STAGING AND STORAGE SHALL BE CONDUCTED WITHIN PUBLIC R/W AND/OR CONSTRUCTION EASEMENTS (ACCESS LICENSE AGREEMENTS).

27. EXISTING UTILITY CONTACT INFORMATION:

UTILITY COMPANY	CONTACT	PHONE NUMBER	ADDRESS
AT&T DISTRIBUTION	MARK GUTIERREZ	772-460-4443	3300 OKEECHOBEE RD FORT PIERCE, FL 34947
COMCAST CABLE	WILSON LOPEZ	772-940-9310	N/A
FORT PIERCE UTILITY AUTHORITY (WATER/SEWER)	RICHARD MUTTERBACK	772-466-1600 x3425	1701 S 37TH ST FORT PIERCE, FL 34947
CITY OF FORT PIERCE (ELECTRIC/GAS)	PAUL LAGUERRE	772-466-1600 x6757	1701 S 37TH ST FORT PIERCE, FL 34947

28. EROSION CONTROL MEASURES SHALL BE TAKEN BY CONTRACTOR DURING CONSTRUCTION AS PER FDOT STANDARDS:

A. SILT FENCE SHALL BE INSTALLED ALONG THE ENTIRE PERIMETER OF THE PROJECT ADJACENT TO ANY SOIL DISTURBING ACTIVITIES.

B. ALL DRAINAGE STRUCTURES ARE TO BE PROTECTED DURING CONSTRUCTION PER FDOT STANDARDS.

C. ALL FENCING, GRADING, SIGNING AND SODDING SHALL BE MAINTAINED DURING THE CONTRACT LIFE. ALL DAMAGED WORK SHALL BE RESTORED AT NO COST TO THE CITY.

29. NON-STRUCTURAL CONCRETE UTILIZED IN CURB AND GUTTER, SIDEWALK AND URBAN FLARED TURNOUT CONSTRUCTION SHALL CONSIST OF 3000 PSI FIBER REINFORCED MIX.

REVISIONS					
DATE	BY	DESCRIPTION	DATE	BY	DESCRIPTION

Kimley»Horn
BRIAN A. GOOD, P.E.
P.E. LICENSE NUMBER 56939
445 24th STREET, SUITE 200
VERO BEACH, FL 32960
(772) 794-4100
CERTIFICATE OF AUTHORIZATION: 00000696

CITY OF FORT PIERCE

EDWARDS ROAD
CANAL REHABILITATION

GENERAL NOTES

SHEET NO. 2

SUMMARY OF PAY ITEM

PAY ITEM NO.	DESCRIPTION	UNIT	PROJECT QUANTITY
	ROADWAY PAY ITEMS		
101-1	MOBILIZATION/ DEMOBILIZATION	LS	1
102-1	MAINTENANCE OF TRAFFIC	LS	1
104-2	PREVENTION, CONTROL & ABATEMENT OF EROSION AND WATER POLLUTION	LS	1
108-1	CONSTRUCTION LAYOUT/ RECORD DRAWINGS	LS	1
110-1-1	CLEARING & GRUBBING	LS	1
120-1	REGULAR EXCAVATION	CY	2,512
120-6	EMBANKMENT	CY	7,201
400-2-2	CLASS II CONCRETE (ENDWALL)	CY	44.0
415-1-1	REINFORCING STEEL (ROADWAY)	LB	3,900
425-1-544	TYPE 'D' DBI W/ DOUBLE TRAVERSABLE SLOTS AND J-BOTTOM (>10')	EA	1
430-175-136	CONCRETE PIPE CULVERT (36" RCP) (S/CD) (CL III)	LF	8
430-175-172	CONCRETE PIPE CULVERT (72" RCP) (S/CD) (CL III)	LF	80
430-175-184	CONCRETE PIPE CULVERT (84" RCP) (S/CD) (CL III)	LF	264
570-1-2A	PERFORMANCE TURF (SOD) (BAHIA)	SY	3,500

PAY ITEM FOOTNOTES

110-1-1 COST TO INCLUDE, BUT NOT LIMITED TO, ALL MANPOWER, EQUIPMENT, HAULING, LEVELING OF TERRAIN AND PROPER DISPOSAL OF MATERIAL/VEGETATION AS DESCRIBED WITHIN PLANS. COST TO INCLUDE REMOVAL, DISPOSAL AND CAPPING EXISTING 6" CIP WM.

120-6 COST TO INCLUDE, BUT NOT LIMITED TO, ALL MATERIAL, EQUIPMENT, HAULING, PLACING AND COMPACTING OF MATERIAL AS DESCRIBED WITHIN THE PLANS. EMBANKMENT SHALL CONSIST OF FDOT SELECT MATERIAL AND SHALL BE COMPACTED TO 100% STANDARD PROCTOR MAX. DENSITY PER FM 1-T099, METHOD C. MATERIAL SHALL BE COMPACTED IN 6" LIFTS.

425-1-544 COST TO INCLUDE, BUT LIMITED TO, MATERIAL AND LABOR ASSOCIATED WITH CONCRETE INLET PAVEMENT.

570-1-2A COST TO INCLUDE, BUT NOT LIMITED TO, PEGGING ALL SOD PLACED ON A SLOPE STEEPER THAN 3:1.

REVISIONS					
DATE	BY	DESCRIPTION	DATE	BY	DESCRIPTION

Kimley»Horn
BRIAN A. GOOD, P.E.
P.E. LICENSE NUMBER 56939
445 24th STREET, SUITE 200
VERO BEACH, FL 32960
(772) 794-4100
CERTIFICATE OF AUTHORIZATION: 00000696

CITY OF FORT PIERCE

EDWARDS ROAD
CANAL REHABILITATION

SUMMARY OF PAY ITEM

SHEET NO. 3

TRINIDAD AVENUE

EXIST. R/W

ADDRESS:
1039 TRINIDAD AVE
FORT PIERCE, FL 34982

ADDRESS:
1035 TRINIDAD AVE
FORT PIERCE, FL 34982

PROP. LINE
(TYP.)

ADDRESS:
1033 TRINIDAD AVE
FORT PIERCE, FL 34982

S-99
STA. 101+34.00, 2.92' LT
CONST. STRAIGHT CONC. HEADWALL
FDOT INDEX NO. 430-034
TOP OF HW EL = 19.00
FL INV. = 8.00

ADDRESS:
1031 TRINIDAD AVE
FORT PIERCE, FL 34982

S-100
STA. 103+99.87, 0.70' LT
CONST. TYPE 'D' DBI W/ DOUBLE
TRAVERSABLE SLOTS AND J-BOTTOM
FDOT INDEX NO. 425-010,-052
GRATE EL = 18.65
S INV. = 10.25
E INV. = 8.15
W INV. = 8.15
BOTTOM EL = 7.15

ADDRESS:
1029 TRINIDAD AVE
FORT PIERCE, FL 34982

S-101
STA. 104+81.43, 6.90' RT
CONST. STRAIGHT CONC. HEADWALL
FDOT INDEX NO. 430-033
TOP OF HW EL = 19.00
FL INV. = 8.20

ADDRESS:
1023 TRINIDAD AVE
FORT PIERCE, FL 34982

N

0 10 40
Feet

EXIST. R/W

A B C D E

EXIST. TREES TO REMAIN

EXIST. FENCE TO REMAIN

CONST. 264 LF OF 84" RCP

EXIST. R/W

CONST. 80 LF OF 72" RCP

EXIST. FENCE TO REMAIN

EXIST. FENCE TO REMAIN

EXIST. R/W

S-99

S-100

S-101

4 FT CHAIN LINK FENCE

6 FT WOOD FENCE

6 FT WOOD FENCE

4 FT CHAIN LINK FENCE

EL 19.00
EL 15.00
EL 10.00

101 102 103 104 105 106

TR OAK 14 TR OAK 14 TR PALM 14

6" CIP WM (ABANDONED)

6" CIP WM (ABANDONED)

EL 10.00
EL 15.00
EL 19.00

EL 19.00
EL 15.00
EL 10.00

EL 10.00
EL 15.00
EL 19.00

℄ CONST.

CONST. 6" CAP

CONTRACTOR SHALL REMOVE AND CAP EXIST. 6" CIP WM (ABANDONED) WITHIN LIMITS OF HEADWALL AND CULVERT IMPROVEMENTS

102 TOPO PT

103 TOPO PT

CONST. CONC. COLLAR AS PER INDEX 430-001

36" RCP

DRAINAGE MANHOLE RIM=19.60

CONST. 8 LF OF 36" RCP

CONST. 6" CAP

BEGIN PROP. IMPROVEMENTS
BEGIN CLEARING & GRUBBING
STA. 100+80.00

END PROP. IMPROVEMENTS
END CLEARING & GRUBBING
STA. 105+38.00

LEGEND
FLOW ARROWS

EDWARDS ROAD

PROP. GRADE LINE

19.00 18.75 18.70 18.65 19.00

S-99 S-100 S-101

18 14 10 6

36" RCP

84" RCP

72" RCP

EXIST. GRADE LINE @ ℄ CONST.

TIE TO EXIST. GRADE

TIE TO EXIST. GRADE

SCALE: HOR.: 1" = 40'
VER.: 1" = 4'

101+00 102+00 103+00 104+00 105+00 106+00

REVISIONS

DATE	BY	DESCRIPTION	DATE	BY	DESCRIPTION

Kimley»Horn
BRIAN A. GOOD, P.E.
P.E. LICENSE NUMBER 56939
445 24th STREET, SUITE 200
VERO BEACH, FL 32960
(772) 794-4100
CERTIFICATE OF AUTHORIZATION: 00000696

CITY OF FORT PIERCE

EDWARDS ROAD
CANAL REHABILITATION

PLAN & PROFILE

SHEET NO.
4

zaid.ajlani 1/21/2019 10:45:20 AM K:\VRB_Roadway\047922019 - Edwards Rd Canal\CADD\RDWY\PLANS_ROADWAY\PLANRD01.dgn

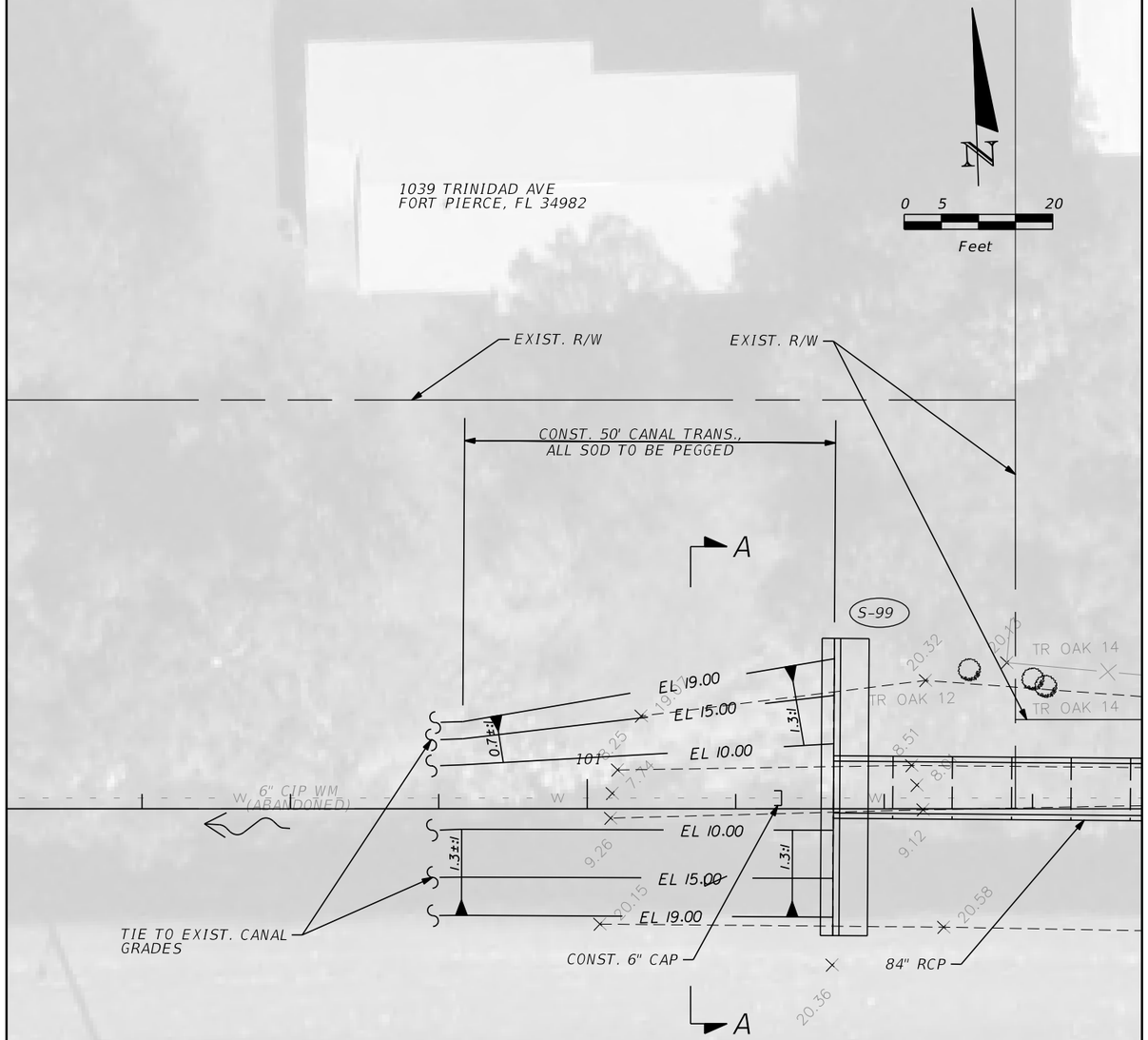

EDWARDS ROAD

WESTERN HEADWALL GRADING DETAIL

SCALE: 1" = 20'

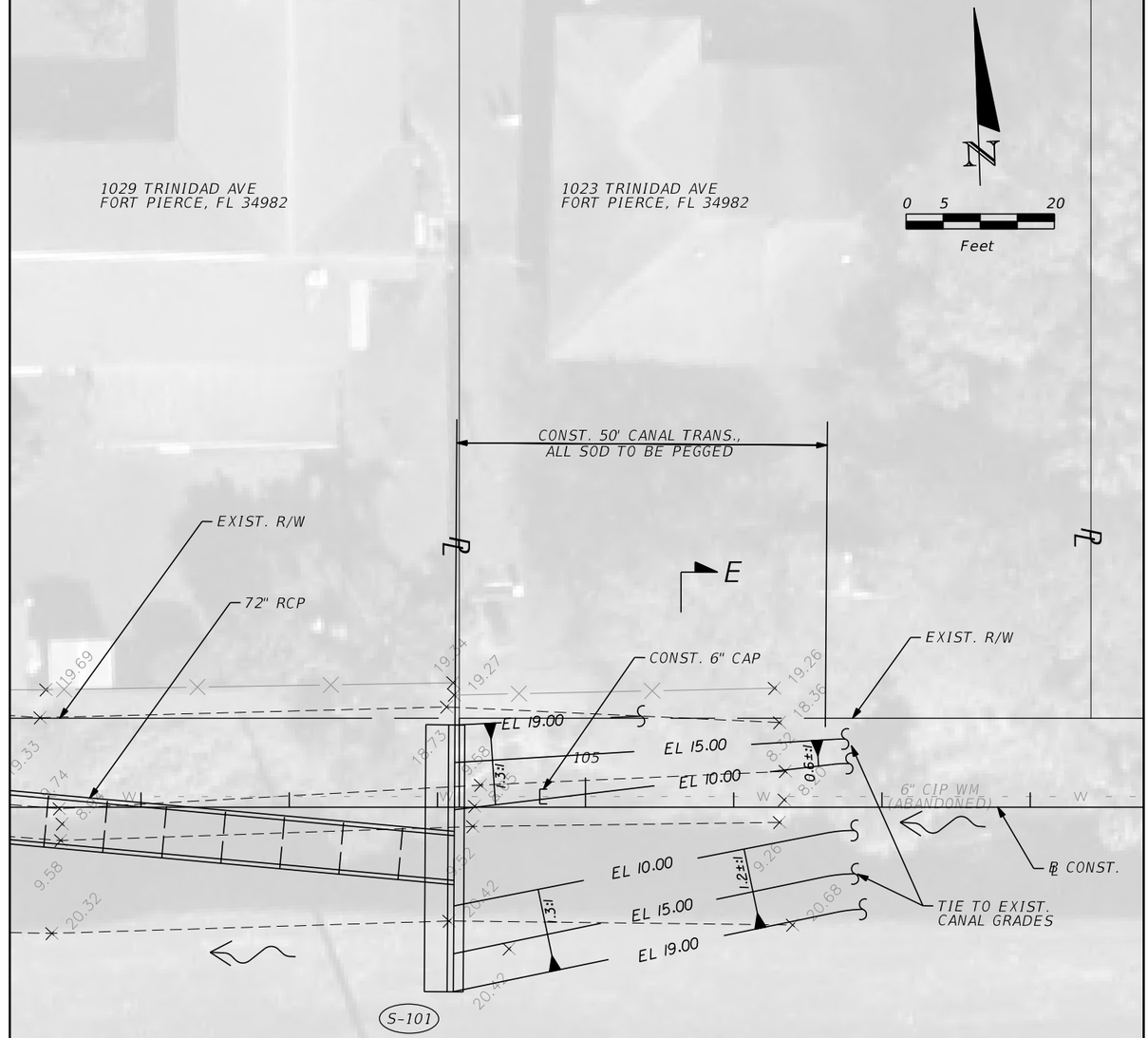

EDWARDS ROAD

EASTERN HEADWALL GRADING DETAIL

SCALE: 1" = 20'

REVISIONS					
DATE	BY	DESCRIPTION	DATE	BY	DESCRIPTION

Kimley»Horn
BRIAN A. GOOD, P.E.
P.E. LICENSE NUMBER 56939
445 24th STREET, SUITE 200
VERO BEACH, FL 32960
(772) 794-4100
CERTIFICATE OF AUTHORIZATION: 00000696

CITY OF FORT PIERCE

EDWARDS ROAD
CANAL REHABILITATION

MISCELLANEOUS DETAILS

SHEET NO. 5

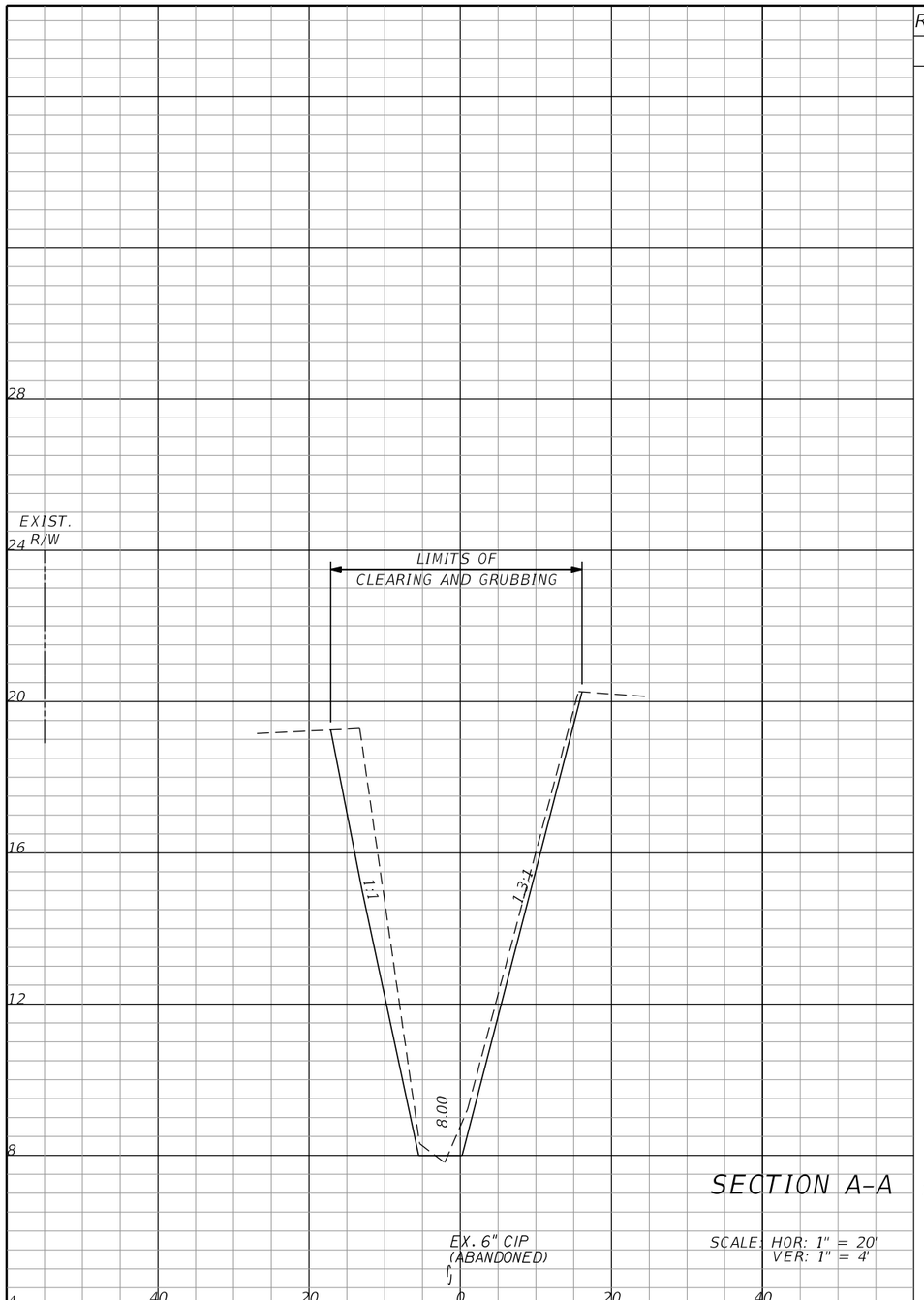

SECTION A-A

SCALE: HOR: 1" = 20'
VER: 1" = 4'

EX. 6" CIP
(ABANDONED)

BEGIN EARTHWORK
STA. 100+78.97

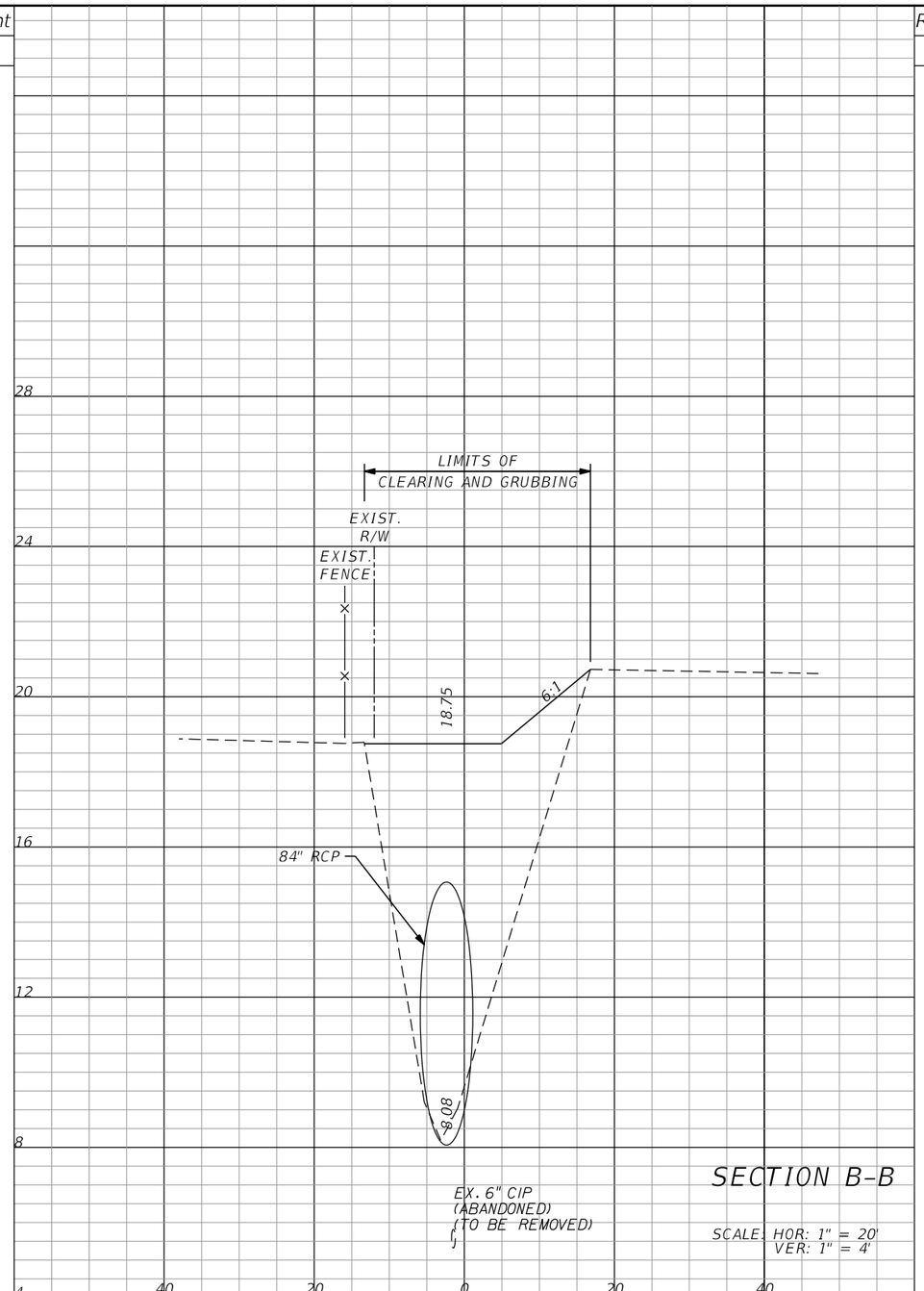

SECTION B-B

SCALE: HOR: 1" = 20'
VER: 1" = 4'

EX. 6" CIP
(ABANDONED)
(TO BE REMOVED)

BEGIN EARTHWORK
STA. 101+34.00

Regular Exc.		Embankment	
A	V	A	V
173.2		0.8	
	224.5		1.0
173.2		0.8	
	0		0
10.6		634	
	294.4		1017

REVISIONS

DATE	BY	DESCRIPTION	DATE	BY	DESCRIPTION

Kimley»Horn
BRIAN A. GOOD, P.E.
P.E. LICENSE NUMBER 56939
445 24TH STREET, SUITE 200
VERO BEACH, FL 32960
(772) 794-4100
CERTIFICATE OF AUTHORIZATION: 00000696

CITY OF FORT PIERCE

EDWARDS ROAD
CANAL REHABILITATION

CROSS SECTIONS

SHEET NO. 6

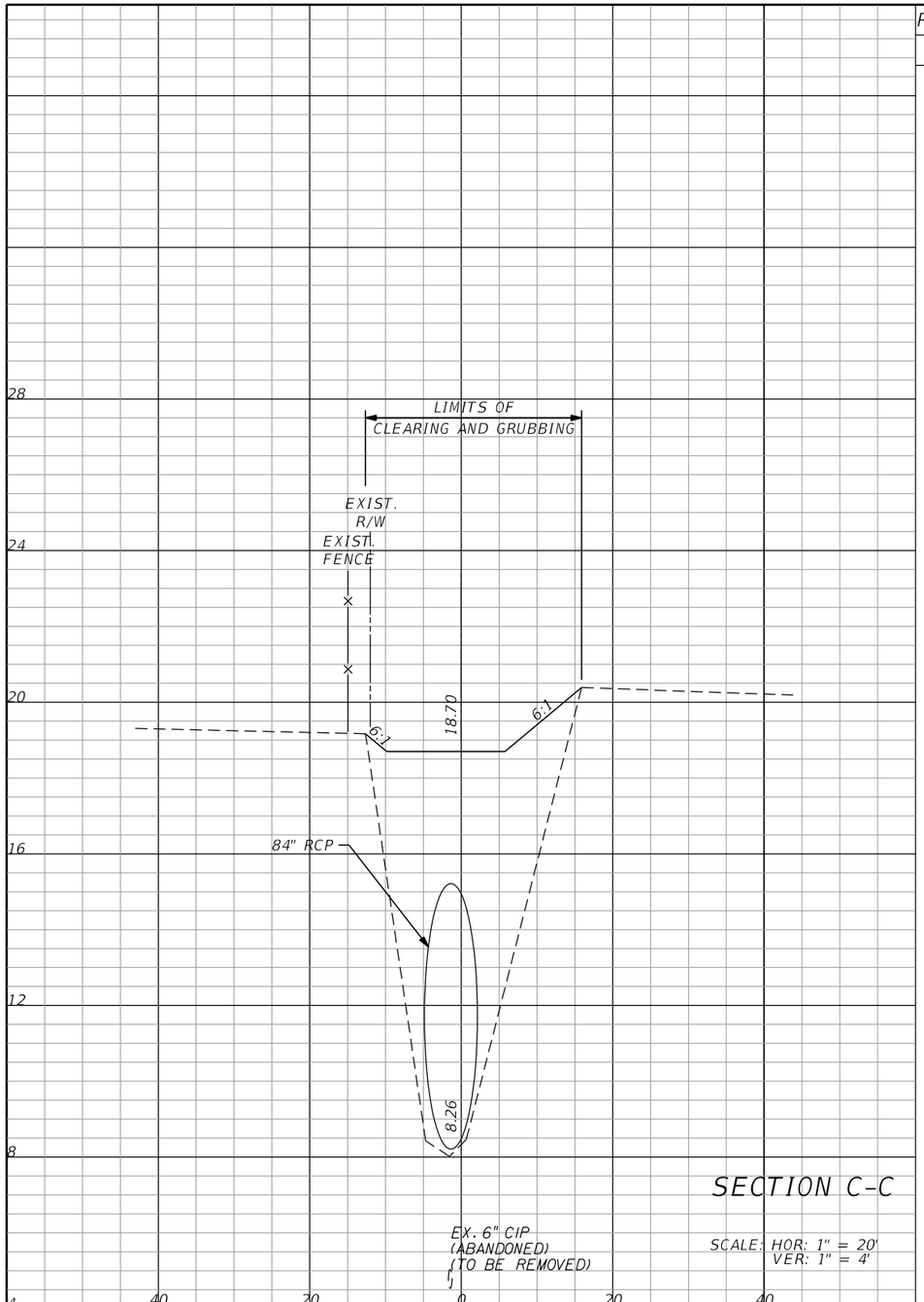

SECTION C-C

SCALE: HOR: 1" = 20'
VER: 1" = 4'

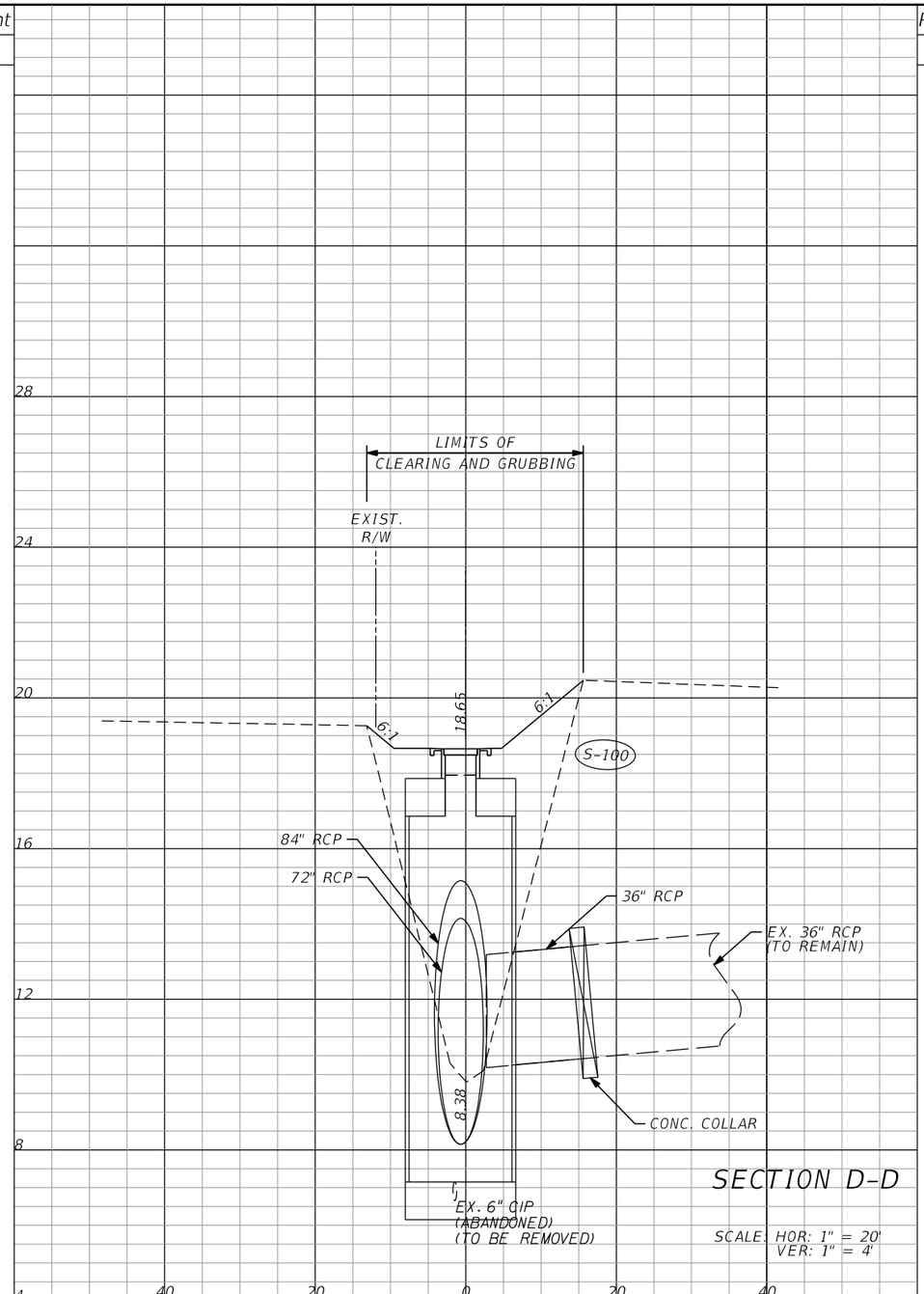

SECTION D-D

SCALE: HOR: 1" = 20'
VER: 1" = 4'

Regular Exc.		Embankment	
A	V	A	V
0	654.3	356.1	586.8
23.8	2892	527.6	1839

REVISIONS					
DATE	BY	DESCRIPTION	DATE	BY	DESCRIPTION

Kimley»Horn
BRIAN A. GOOD, P.E.
P.E. LICENSE NUMBER 56939
445 24TH STREET, SUITE 200
VERO BEACH, FL 32960
(772) 794-4100
CERTIFICATE OF AUTHORIZATION: 00000696

CITY OF FORT PIERCE

EDWARDS ROAD
CANAL REHABILITATION

CROSS SECTIONS

SHEET NO. 7

END EARTHWORK
STA. 105+36.29

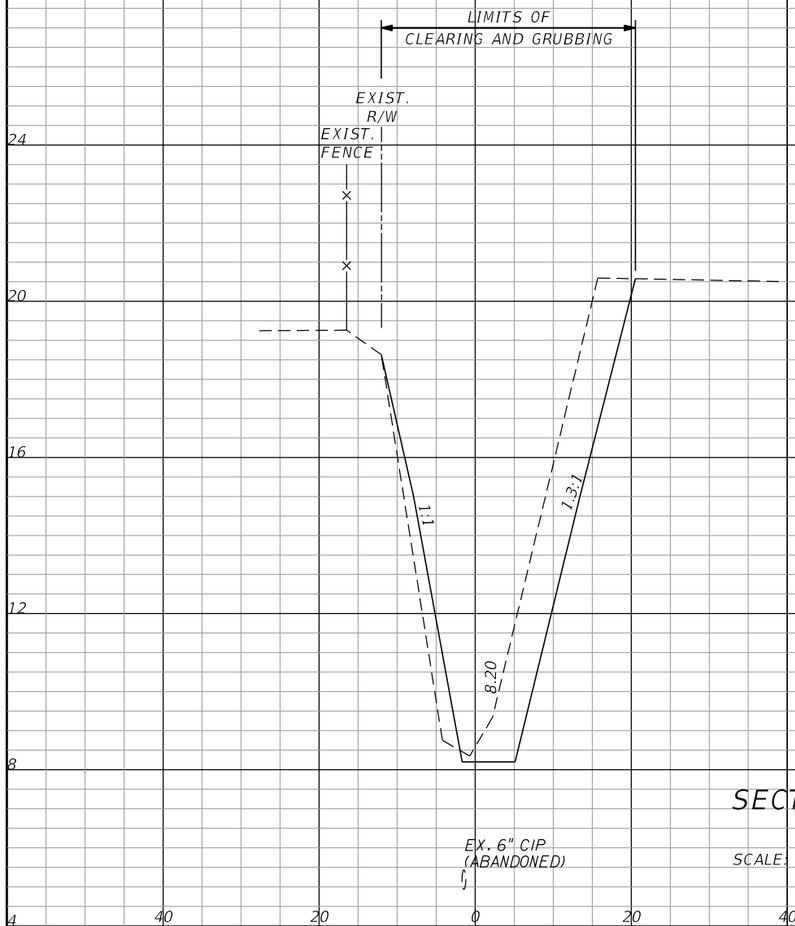

SECTION E-E

SCALE: HOR: 1" = 20'
VER: 1" = 4'

Regular Exc.		Embankment	
A	V	A	V
283.6		97.1	
	122.7		42.1
283.6		97.1	
	1319		1410

Regular Exc.		Embankment	
A	V	A	V

REVISIONS

DATE	BY	DESCRIPTION	DATE	BY	DESCRIPTION

Kimley»Horn
BRIAN A. GOOD, P.E.
P.E. LICENSE NUMBER 56939
445 24TH STREET, SUITE 200
VERO BEACH, FL 32960
(772) 794-4100
CERTIFICATE OF AUTHORIZATION: 00000696

CITY OF FORT PIERCE

EDWARDS ROAD
CANAL REHABILITATION

CROSS SECTIONS

SHEET NO.
8

SPECIFIC AUTHORIZATION NO. 6

CITY OF FORT PIERCE CANAL NO. 9 (EDWARDS ROAD CANAL) PROFESSIONAL SERVICES

SCOPE OF SERVICES

Pursuant to the provisions contained in the "RFQ No. 2013-005 – Engineering Services" between The City of Fort Pierce (hereinafter referred to as "CITY") and Kimley-Horn and Associates, Inc. (hereinafter referred to as "ENGINEER") dated the _____ day of __ _____ 2019, CITY authorizes the ENGINEER to provide services in accordance with the terms and conditions set forth in RFQ 2013-005.

The CITY desires additional services related to the proposed Canal No. 9 stabilization project as identified in Specific Authorization No. 5, hereinafter referred to as the "Project".

This Project is a USDA NRCS funded project.

Section 1 - Scope of Work and Schedule of Services

ENGINEER will provide the following services in accordance with this AUTHORIZATION:

Professional consultant services are required for the revisions to the engineering plans and specification package to support the re-design of 325 LF of Canal No. 9 as situated between 1029 Trinidad Avenue and 1035 Trinidad Avenue. The engineer will prepare the plans to include enclosing the canal with culvert pipe in lieu of the previously proposed canal bank stabilization due to the limited canal right-of-way. All design and specifications will adhere to the requirements of the City of Fort Pierce, FDOT, and the USDA NRCS. The proposed improvements and scope of services are more particularly described in Exhibit "A", attached hereto and incorporated by reference herein.

Section 2 - Deliverables

ENGINEER shall provide the following deliverables to the CITY as listed below and as described in Exhibit "A', attached hereto and incorporated by reference herein:

100% Design Drawings	2 Weeks from NTP

SPECIFIC AUTHORIZATION NO. 6

CITY OF FORT PIERCE CANAL NO. 9 (EDWARDS ROAD CANAL) PROFESSIONAL SERVICES

Section 3 - Method and Amount of Compensation

CITY will compensate ENGINEER for services under this AUTHORIZATION in accordance with the payment method as set forth in the attached Exhibit "B", attached hereto and incorporated by reference herein.

The budget (or fee) for the services is not to exceed $11,120.00

Section 4 - CITY's Responsibilities

CITY hereby designates City Engineer or designee as CITY's representative pursuant to Section 8 of the AGREEMENT.

Section 5 - Other Provisions

All applicable portions of the AGREEMENT not specifically modified herein shall remain in full force and effect and are incorporated by reference herein.

IN WITNESS WHEREOF, this AGREEMENT, consisting of eight pages has been fully executed on behalf of the ENGINEER by its duly authorized officer, and the CITY has the same to be duly executed in its name and in its behalf, effective as of the date herein above written.

CITY OF FORT PIERCE, FLORIDA:

By: _____ Date: _____
Linda Hudson, Mayor

Attest: _____
Linda Cox, City Clerk

SPECIFIC AUTHORIZATION NO. 6

CITY OF FORT PIERCE CANAL NO. 9 (EDWARDS ROAD CANAL)
PROFESSIONAL SERVICES

KIMLEY-HORN & ASSOCIATES, INC.

By:_____ Date: 2/4/19
Brian Good, P.E, Senior Vice President

APPROVED AS TO FORM & CORRECTNESS:

By:_____ Date: _____
Peter J. Sweeney, City Attorney

EXHIBIT "A"
DETAILED DESCRIPTION OF THE PROJECT
AND
ENGINEER SCOPE OF SERVICES

CITY OF FORT PIERCE EDWARDS ROAD CANAL STABILIZATION PROJECT

PROJECT DESCRIPTION:

The CITY desires to develop final construction documents to support canal stabilization improvements along the Edwards Road canal. The canal stabilization shall extend the full width of the following parcels:

- 1035 Trinidad Avenue – 100-foot canal frontage
- 1033 Trinidad Avenue – 75-foot canal frontage
- 1031 Trinidad Avenue - 75-foot canal frontage
- 1029 Trinidad Avenue - 75-foot canal frontage

Due to limited existing right-of-way, the CITY desires to enclose this portion of the Edwards Road canal (Canal No. 9) with a culvert in lieu of canal bank stabilization. The canal culvert shall be designed to provide straight concrete headwall end treatments. The proposed culvert shall be sized as not to impede stormwater conveyance beyond existing conditions.

DESCRIPTION OF TASK DELIVERABLES:

The ENGINEER agrees to perform professional roadway design and related services in connection with the project as required and set forth in the following:

A. General:

1. The ENGINEER will endeavor not to duplicate any previous work done on the project. After issuance of written authorization to proceed, the ENGINEER shall consult with the CITY to clarify and define the requirements for the project and review available data.

2. The ENGINEER will attend conferences with the CITY and its representatives upon reasonable request.

3. In order to accomplish the work described under this Task Order in the time frames and conditions set forth, the ENGINEER will observe the following requirements:

    a. The ENGINEER will complete his work on the project within the time allowed by maintaining an adequate staff of registered engineers, draftsmen, and other employees on the work.

    b. The ENGINEER will design the project in such a manner as to be in reasonable conformance with applicable federal, state and local laws, and shall comply with the Florida Department of Transportation (FDOT) Plans Preparation Manual Design Criteria, latest edition.

    c. The ENGINEER will prepare all necessary sketches and completed application forms to accompany the CITY's applications for required federal, state, or local permits.

    d. The ENGINEER will cooperate with the CITY in order that all phases of the work may be properly scheduled and coordinated.

    e. The ENGINEER will send a complete preliminary set of construction plans to any city, county, state, regional or federal regulatory agency from which a permit or other approval is required prior to final approval of the design by the City Engineer, and will coordinate the project design with all applicable agencies.

4. Compensation to the ENGINEER for basic services shall be in accordance with Section IV – Compensation, of this Agreement, as mutually agreed upon by the

ENGINEER and CITY.

B. Drainage Analysis and Plans:

The ENGINEER shall design and develop construction plans to support the proposed enclosure of the Edwards Road canal adjacent to the parcels identified above.

TIME OF PERFORMANCE:

Upon authorization to proceed by the CITY, final design documents are expected to take approximately four (4) weeks from the Notice to Proceed (NTP).

100% Design Drawings	4 weeks following NTP

All work will be completed no later than December 31, 2019.

EXHIBIT "B"

COMPENSATION

The CITY agrees to pay and the ENGINEER agrees to accept for services rendered pursuant to fees in accordance with the following:

A. Professional Services Fee: The basic compensation mutually agreed upon by the ENGINEER and the CITY follows:

Lump Sum Tasks

Task Description	Fee
Drainage Analysis and Plans	$ 11,120

Compensation will be computed at the hourly rates of

Project Manager	$ 165.00
Assistant Project Manager	$ 140.00
Senior Engineer	$ 125.00
Engineer	$ 105.00
Engineering Technician	$ 90.00
Draftsperson	$ 85.00
Registered Land Surveyor	$ 120.00
Survey Technician	$ 75.00
Survey Crew	$ 95.00
Secretary	$ 50.00

City Commission Regular Meeting **11.g.**

Meeting Date: 02/19/2019

Re: Lot Clearing Lien - 1218 Avenue I

Submitted For: Peggy Arraiz, Code Compliance Manager, Code Enforcement

SUBJECT:

Approve waiver of fees in the amount of $564.64 associated with lot clearing lien against 1218 Avenue I, Fort Pierce, FL 34950, Parcel ID #2404-804-0013-000-8 previously owned by Evelia Rolle & Maurice Jelks, 1218 Avenue I, Fort Pierce, FL 34950 and currently owned by Lazatha Murphy, 3403 Avenue P, Fort Pierce, FL 34947 contingent upon payment of $540.00 payable in 30 days. Please note, applicant is requesting a waiver of all fees, including hard costs.

SUMMARY:

Request by applicant to to waive all fees, including city incurred charges, administrative fees, interest, and penalties in the amount of $1104.64. Mr. Murphy is the current owner of property referenced above and asking for all fines to be waived. The violations and fines were against the previous owners. He plans to improve on the property and turn it into affordable housing.

RECOMMENDATION:

Staff recommends waiving interest, penalties, and administrative fees in the amount of $564.64 contingent upon payment of balance in the amount of $540.00 payable in 30 days.

ALTERNATIVES:

Approve the applicant's request for full waiver of fees.
Determine alternative amount.

RESPONSIBLE STAFF:

Colleen Greer, Code Enforcement Clerk

COORDINATED WITH:

Margaret Arraiz, Code Compliance Manager.
Kathy D'Arton, Accounts Receivable.

Fiscal Impact

Budgeted Y/N: 2018

Amount: 540.00

OTHER INFORMATION:

$540.00 to the general fund.

Attachments

Request
Breakdown

Form Review

Form Started By: Colleen Greer Started On: 01/31/2019 02:56 PM
Final Approval Date: 02/15/2019

THE SUNRISE CITY
FORT PIERCE
CODE ENFORCEMENT
Florida

REQUEST FOR A REDUCTION OR RESCINDMENT OF LOT CLEARING OR DEMOLTION LIEN

Date:	October 26, 2018				
Property address:	N 9TH ST Addr 2403711003100003				
Owner(s) of record:	John Travers				
Mailing address:	1630 Seaway Dr				
Property tax ID #:					
Original purchase date:	10-25-18	Original purchase price:	2500.00		
Property is used for:	☐ Single Family	☐ Multi-family	☐ Commercial	☐ Industrial	☒ Vacant Lot
Name of person requesting reduction:	John Travers	Relationship to owner(s)			
Telephone #:	772-971-7776	Mobile phone #:			
E-mail:	TraversJohn@ATT.net	Preferred contact method:			
What are owner(s) intentions for property:					
Are there current code violations?	☒ No	☐ Yes	Explain: (please attached notice)		
Is property listed for sale?	☒ No	☐ Yes	If yes, what is listing price?		
Is property under contract for sale?	☒ No	☐ Yes	If yes, what is the sale price?		

City incurred charges (lot clearing, demolition, etc)	$ 150
Administrative fees	$ 100
Interest	$ 48.75
Penalties	$ 9.78
TOTAL AMOUNT DUE TO CITY	$ 308.53
DOLLAR AMOUNT REQUESTING TO BE WAIVED	$ Waive
DOLLAR AMOUNT I AGREE TO PAY	$ 0

Signature of Owner or Representative Date

John Travers
Printed Name

THE SUNRISE CITY
FORT PIERCE
CODE ENFORCEMENT
Florida

REQUEST FOR REDUCTION OF PENALTY

By completing this form, you are making statements under oath. Failure to be truthful is a violation of Fort Pierce City Code and Florida Statutes pertaining to perjury, which is a felony punishable by up to fifteen (15) years imprisonment.

INSTRUCTIONS:

1. Please fill in blanks completely.
2. Be specific when writing your statement. Use additional pages if necessary.
3. If you are claiming medical or financial hardship, attach supporting documentation (i.e. doctor's statement or proof of income).
4. Complete the appropriate application for lien reduction / rescindment.
5. For lot clearing or demolition liens, contact Kathy D'Arton in the Finance Department (772-467-3076) for cost / fees breakdown.
6. For code enforcement liens (those imposed by a Special Magistrate or Code Enforcement Board), contact Colleen Greer (772-467-3149) for cost / fees breakdown.
7. If you do not have access to a Notary Public, one will be provided to you by the Department at no charge. All forms must be signed in the presence of the Notary to be valid.
8. Return this form, the application and any other pertinent documentation to the Code Enforcement Department.
9. Requests for Reduction / Rescindment of code enforcement liens are governed by Rule 17 of the City's Rules & Regulation for Code Enforcement Board and Special Magistrate.

Property Address: n 9th st 2403711003100002

Property Owner: John Travers

Mailing Address: 1630 Seaway Dr 304 ft pierce

Telephone #: 772-971-7776 Cell Phone #:

E-Mail Address: TraversJohn@ATT.net

Is the property in compliance? Yes If no, please explain in the narrative of your request.

I, John Travers, do hereby submit this Petition in request for a reduction in the total amount of the penalty imposed and in support offer the following statement:

Late Fee

Date: 10-27-18

Signed: John Travers

Print Name: John Travers

STATE OF FLORIDA

COUNTY OF ST. LUCIE

PERSONALLY APPEARED before me, the undersigned authority John Travers who acknowledged before me that the information contained herein is true and correct. He or She is / is not personally known to me and has produced FL Sewers License as identification.

SWORN TO AND SUBSCRIBED before me this 26th day of October, 2018.

COLLEEN GREER
State of Florida - Notary Public
Commission # GG 013803
My Comm. Expires 11-13-2020
Bonded Through
National Notary Assn

Colleen Greer

Notary Public, State of Florida

OWNER / REPRESENTATIVE REQUEST TO PROCESS APPLICATION

Property Address:	

I acknowledge that I have been provided a copy of Rule 17 of the Rules of Procedure for the City of Fort Pierce Code Enforcement Board and Special Magistrates and that I have read the rules and being advised as such make the following request:

☐ I am requesting that my application for lien reduction be processed administratively through the Rules of Procedure Sec. 17(h), I understand the requirements to be met and that I waive my right to a hearing before either the Special Magistrate or Code Enforcement Board.

☒ I am requesting that my application for lien reduction be considered and a determination made by the City Commission of the City of Fort Pierce.

John Laws 10-26-18 John Laws

Signature of Owner or Representative Date Printed Name

COFP – APPLICATION PROCESS DETERMINATION

☑ Staff has reviewed the request for lien reduction and agrees to process the application as requested by the signing party.

☐ Staff has reviewed the request for lien reduction and do not agree to process the application as requested by the signing party. The matter will be placed before the City Commission for final determination.

Margaret M. Arras 10/26/18 Margaret M. Arras

City Representative Date Printed Name

MEMORANDUM

TO: The Honorable Mayor and Members of the City Commission

THROUGH: Nicholas Mimms, City Manager

FROM: Colleen Greer, Executive Secretary to Code Enforcement

SUBJECT: **LOT CLEARING LIEN REDUCTION**
Address: N 9th Street, Fort Pierce, FL
Parcel ID#: 2403-711-0031-000-2
Owner: John Travers

DATE: November 19, 2018

The following is a breakdown of the above property:

Description	Costs (General Fund)	Interest & Penalties	Administrative Fees
Lot Clearing Lien	$150.00	$58.53	$100.00
TOTAL	$150.00	$58.53	$100.00

CAN BE WAIVED (ALL INTEREST, PENALTIES, AND ADMIN. COSTS) $158.53
CANNOT BE WAIVED (ALL LOT CLEARING COSTS) $150.00
$308.53

JOSEPH E. SMITH, CLERK OF THE CIRCUIT COURT
SAINT LUCIE COUNTY
FILE # 4495827 10/29/2018 11:38:13 AM
OR BOOK 4196 PAGE 2600 - 2600 Doc Type: DEED
RECORDING: $10.00
Doc Tax: $17.50

Prepared By: Jeanne Arias
223 N 2nd St, Fort Pierce, FL 34950
Parcel Identification No. 2403-711-0031-000-2
Name: *Jeanne Arias*

Quitclaim Deed

This Quitclaim Deed has been executed this 6th day of October 26, 2018 between Jeanne Arias, an individual, whose PO address is 223 N 2nd St, Fort Pierce, FL 34950, hereinafter referred to as Grantor, and John Travers, an individual, whose PO address 1630 Seaway Dr, Apt 304, Fort Pierce, Fl, 34949 is of the County of St Lucie, State of Florida, hereinafter referred to as Grantee.

Witnesseth, that the Grantor, for and in consideration of the sum of $2,500 & no/100 Dollars, in hand paid by Grantee, the receipt of which is hereby acknowledged, have granted, bargained and quitclaimed to the said Grantee and Grantees' heirs and assigns forever, all the right, title, interest, claim and demand which the grantor has in and to the following described land, situate, lying and being in the County of Saint Lucie, State of Florida, to wit:

Address: TBD N 9th St, Fort Pierce, Fl
Parcel ID: 2403-711-0031-000-2
Legal Desc: JEW MCCULLERSS S/D LOT 29 (OR 4114-1472)

To Have and to Hold the same together with all and singular the appurtenances thereunto belonging or in anywise appertaining, and all the estate, right, title, interest, lien, equity, to the only proper use, benefit and behoof of the grantee forever.

In Witness Whereof, the said Grantor has signed and sealed these presents the day and year first above written.
Signed in the presences of:

Witness

Witness

Grantor

223 N 2ND ST FT. P
Grantor's Address FL 34950

STATE OF FLORIDA, COUNTY OF SAINT LUCIE

The foregoing instrument was acknowledged before me this 26 day of October, 2018 by Jeanne Arias, who has provided a Driver's License as identification.

RICHARD E WELKER
Notary Public - State of Florida
Commission # FF 222807
My Comm. Expires Apr 21, 2019
Bonded through National Notary Assn.

RECEIPT

Joseph E. Smith
Clerk of the Circuit Court
St. Lucie County

1648051

Clerk of the Circuit Court
St. Lucie County
201 South Indian River Drive
Fort Pierce, FL 34950
(772) 462-6900

Transaction #: 1648051
Receipt #: 1478632

Cashier Date: 10/29/2018 11:38:14AM
Print Date: 10/29/2018 11:38:43AM

www.stlucieclerk.com

CUSTOMER INFORMATION

JOHN TRAVERS

,

TRANSACTION INFORMATION

Date Received:	10/29/2018 11:35:36AM
Location:	North County
Return Code:	Over the Counter
Trans Type:	Recording
Reference:	
Cashier:	PETERSONZ

PAYMENT SUMMARY

Total Fees:	$27.50
Total Payments:	$40.00
Balance Due:	$0.00
Cash Tendered:	$40.00
Change:	$12.50

Payment

CASH $40.00

0.00

CHANGE $12.50

Official Record

DEED

BK/PG: 4196/2600 DOC #: 4495827 Date: 10/29/2018 11:38:13AM
FROM: ARIAS,JEANNE TO: TRAVERS,JOHN

Deed Doc Stamps @ $0.70 per $100	17.50
Indexing @ 1st 4 Names Free, Addt'l=$1 ea.	0.00
Recording @ 1st=$10 Addt'l=$8.50 ea.	10.00

City Commission Regular Meeting **11.h.**

Meeting Date: 02/19/2019

Re: Emergency Repair Lien - 1218 Avenue I

Submitted For: Peggy Arraiz, Code Compliance Manager, Code Enforcement

SUBJECT:

Approve waiver of fees in the amount of $283.60 associated with lot clearing lien against 1218 Avenue I, Fort Pierce, FL 34950, Parcel ID #2404-804-0013-000-8 previously owned by Evelia Rolle & Maurice Jelks, 1218 Avenue I, Fort Pierce, FL 34950 and currently owned by Lazatha Murphy, 3403 Avenue P, Fort Pierce, FL 34947 contingent upon payment of $800.00 payable in 30 days. Please note, applicant is requesting a waiver of all fees, including hard costs

SUMMARY:

Request by applicant to to waive all fees, including city incurred charges, administrative fees, interest, and penalties in the amount of $1,083.60. Mr. Murphy is the current owner of property referenced above and asking for all fines to be waived. The violations and fines were against the previous owners. He plans to improve on the property and turn it into affordable housing.

RECOMMENDATION:

Staff recommends waiving interest, penalties, and administrative fees in the amount of $283.60 contingent upon payment of balance in the amount of $800.00 payable in 30 days.

ALTERNATIVES:

Approve the applicant's request for full waiver of fees.
Determine alternative amount.

RESPONSIBLE STAFF:

Colleen Greer, Code Enforcement Clerk

COORDINATED WITH:

Margaret Arraiz, Code Compliance Manager
Kathy D'Arton, Accounts Receivable

Fiscal Impact

OTHER INFORMATION:

n/a

Form Review

Form Started By: Colleen Greer Started On: 01/31/2019 03:07 PM
Final Approval Date: 02/15/2019

City Commission Regular Meeting **12.a.**

Meeting Date: 02/19/2019

Re: Conditional Use - Steve Tarr (TR) - 316 S. Ocean Drive

Submitted For: Rebecca Grohall, Director, Planning & Zoning

SUBJECT:

Quasi-Judicial Hearing - Review and approval of an applicaiton for a Conditional Use with New Construction submitted by property owner/applicant, Steve Tarr (TR), for construction seaward of the Coastal Construction Control Line (CCCL) for an exterior staircase to the prinicpal structure and a dune crossover with deck, located at 316 S. Ocean Drive. The property is zoned Hutchinson Island Medium Residential (R4A), Parcel ID 2401-501-0022-000-5.

SUMMARY:

The applicant is requesting review and approval of Conditonal Use for new construction that is seaward of the Coastal Construction Control Line (CCCL). The two components of the request are for
1) a new exterior staircase
2) a dune crossover with observation deck

Construction eastward of the CCCL requires a Conditional Use, the Applicant has requested expedited processing due to Sea Turtle Nesting Season. Once nesting season has started, construction cannot occur near the dune. For the Atlantic Coast, sea turtle nesting season begins March 1st of each year. The applicant is working with St. Lucie County regarding resolution of the work wtihin the Perpetual Construction Easement that is held by St. Lucie County.

RECOMMENDATION:

Approve with conditions as outlined in Staff Report

ALTERNATIVES:

Approve without conditions
Disapprove

RESPONSIBLE STAFF:

Rebecca Grohall, Planning Director

COORDINATED WITH:

Technical Review Committee
Building Department
St. Lucie County - various departments

Fiscal Impact

Budgeted Y/N: N

Fiscal Year: 2019

OTHER INFORMATION:

No impact

Attachments

Staff Report
Application with supporting documents
Property Card
Aerial Map
Zoning Map
TRC Comments
Quasi Judicial Certification

Form Review

Inbox	Reviewed By	Date
City Manager	Rebecca Grohall	02/06/2019 04:57 PM
City Manager	Nick Mimms	02/12/2019 11:18 AM

Form Started By: Rebecca Grohall Started On: 02/06/2019 04:14 PM

Final Approval Date: 02/12/2019

THE SUNRISE CITY
FORT PIERCE
PLANNING DEPARTMENT Florida

TO: Nicholas Mimms, PE, City Manager

FROM: Rebecca Grohall, AICP, Planning Director

RE: **Application for Conditional Use (Coastal Construction Control Line) CCCL Steve Tarr (TR) - 316 South Ocean Drive**

DATE: February 4, 2019

STAFF REPORT

Property Owner Applicant: Steven Tarr (TR)
4521 PGA Boulevard #201
Palm Beach Gardens, FL 33418

Requested Action: Recommendation of Approval with Conditions for a Conditional Use with New Construction submitted by property owner Steve Tarr (TR), for new construction of an exterior staircase to the residence and a dune crossover with a deck, located seaward of the Coastal Construction Control Line (CCCL).

Site Location: 316 S. Ocean Drive

Parcel IDs: 2401-501-0022-000-5

Current Zoning: R4A, Hutchinson Island Medium Residential

Future Land-Use HIR, Hutchinson Island Residential

North	East	South	West
R4A	N/A	R4A	R4A

Staff Analysis:
In accordance with Section 22-66 and 22-76 of the City Code, the applicant is requesting the review and approval of an elevated dune crossing with deck, and an exterior staircase to the existing residence. The structure is a duplex located on the east side of Ocean Drive.

This site was first constructed in 2002, and in general, vertical construction seaward of the Coastal Construction Control Line (CCCL) requires additional review and approval as a Conditional Use. The CCCL is intended to help reduce beach erosion through protection of the dune. In compliance with the FDEP Permit, all work near dunes must cease by sea turtle nesting season, which is March 1st through October for the Atlantic coast.

During the course of review, St. Lucie County provided information on the St. Lucie County Perpetual Construction Easement that exists but was not shown on the survey, including support documentation on the recordation of the easement.

The proposed construction was reviewed according to Sec. 22-74 and would not adversely affect the public health, safety, comfort, good order, appearance, convenience and the general welfare provided that the applicant reaches an agreement with St. Lucie County in accordance with the conditions of the perpetual construction easement.

Technical Review Committee:
All affected City Departments have reviewed the proposed Application for Conditional Use with New Construction; and have provided conditional approval based on compliance with requirements of the City Code. The comments generated from the technical review are provided for review. The applicant has reviewed the comments and will work with St. Lucie Erosion Control district.

Planning Board Recommendation:
The Planning Board will review this application at their meeting of February 12th, 2019, and the Commission will be updated during the Staff presentation.

Staff Recommendation:
The requested Application for Conditional Use meets the requirements of the City Code specifically Section 22-66, Coastal Construction Control Line (CCCL) and Article V- Conditional Uses Sec 22.74. Therefore, Staff recommends that the Planning Board recommend approval of the request as presented, subject to the following Conditions of Approval:

1. The segment of the proposed dune cross-over extending into the perpetual construction easement, contained in Resolution No. 98-016, as recorded in OR Book 1154, Pages 1351-1360, is approved by the St. Lucie County Erosion District in accordance with the requirements of said easement *or* is eliminated, prior to issuance of a building permit by the City of Fort Pierce. The contact information for St. Lucie County Erosion District is: Joshua Revord, P.E., Coastal Engineer St. Lucie County Erosion District - (772) 462-1269 / RevordJ@stlucieco.org.
2. The proposed observation deck (12ft. by 12ft. – Future) will not be located the perpetual construction easement contained in Resolution No. 98-016, as recorded in OR

Book 1154, Pages 1351-1360, with the construction drawings and DEP permit updated accordingly.

3. The work is completed in compliance with DEP rules for dune construction, and in accordance with sea turtle compliant lighting (Sec 5-375 if lighting is to be used).

THE SUNRISE CITY
FORT PIERCE
PLANNING DEPARTMENT *Florida*

$250

DEVELOPMENT REVIEW

Property address or Location 316 S. Ocean Dr

Parcel ID #(s) 2401-501-0022-000-5

Project description stairs and dunewalkover

Property Owner(s)
Steven Tarr

Street Address
316 S. Ocean Dr.

City F.P. State FL Zip 34949

Phone Number

Email Address hovenre@gmail.com

Applicant/Representative, Title, Company

Street Address

City State Zip

Phone Number

Email Address

Property Owner(s) Acknowledgements: *- This application will not be considered complete without the signature of all property owners of record, which shall serve as an acknowledgement of the submission of this application. The property owner's signature below shall also authorize the Applicant (if other than the property owner) and/or Representative to act in his/her behalf for the purposes of seeking approval for the application described herein. The undersigned consents to inspection and photographing of the subject property by the Planning staff for purposes of consideration of this Application and/or presentation to the Planning Board and City Commission.*

Property Owner(s) Signature(s)

STATE OF FLORIDA FL COUNTY ST. LUCIE

The foregoing instrument was acknowledged before me this 16th day of January, 20 19, by STEVE TARR who is personally known to me or has produced _____ as identification.

Signature of Notary

AMARIS ISABEL GIL
MY COMMISSION # FF 914194
EXPIRES: August 30, 2019
Bonded Thru Budget Notary Services

INTAKE MEETINGS ARE REQUIRED FOR ALL SUBMITTALS. CALL (772) 467-3729

TO BE COMPLETED BY STAFF

Zoning	Future Land Use	Total Acres	Historic District	Historic Designation
				Contributing Individual Non-Contributing None

Pre-Application Meeting Date_____ Fees_____ Control #_____ B. Permit #_____

Intake Planner_____

Planner Assigned_____

Approved By_____ Date _____

Comments_____

Intake Date Stamp

☐ DEVELOPMENT REVIEW

General Information

- ☐ Incomplete application packets cannot be accepted.
- ☐ Site Plan approval is valid for one (1) year following City Commission approval. In order to maintain site plan approval, vertical improvements, permitted by the Building Department must commence prior to the 12-month expiration date, and building permits must be maintained until site plan is completed, per plans, or approval shall lapse.

Choose Application Type:

Application Type		
☐ Site Plan	☐ Conditional Use with New Const.	☐ Major Amendment
☐ Conceptual Development Plan		☐ Minor Amendment

Site Information:

Non-Residential: Proposed Sq. Ft.: _____ Residential: Proposed Units: _____

Surrounding Uses: *(i.e. single family home, retail, industrial, etc.)*

North	South	East	West

Application Outlook

Pre-Application Meeting
Wednesday Afternoons

Application Intake Meeting
Call to schedule

Technical Review Committee
3rd Thursday

Planning Board
2nd Tuesday

City Commission
1st & 3rd Monday

Site Plan submittal requirements:

Submit one (1) original & thirteen (13) hard copies and one (1) CD of the following. Additional copies will be required of subsequent submittals.

- ☑ Complete notarized application
- ☑ Warranty Deed
- ☑ SLC Property Record Card
- ☑ Statements of ownership & control of proposed development. Statement describing in detail: character & intended use. STEVEN TARR - OWNER PRIVATE USE OF DUNE WALKOVER AND ENTRY STAIRS.
- ☑ General location map (see Section 22-58.d.2)
- ☑ Survey (see Section 22-58.d.3)
- ☑ Site Plan (see Section 22-58.d.4)
- ☑ Landscaping Plan (see Section 22-187) - NO NEW LANDSCAPING
- ☑ Storm Drainage Plan (see Section 22-58.d.6) - NO IMPACT ON DRAINAGE.
- ☑ Environmental Impact Report - DEP PERMIT
- ☑ Beach/Dune System protection plan, if applicable (see Section 22-58.d.7) - DEP PERMIT
- ☑ Lighting Plan (see Section 22-58.d.8) - NONE, NO LIGHTS.
- ☑ Design Review submittals (see Design Review application) - ABOVE
- ☑ Traffic Impact Report - NO NEW TRAFFIC
- ☑ Concurrency Review submittals (see Concurrency Review application) - NO IMPACT ON CONCURRENCY
- ☑ BUILDING PLANS - REVISED PAGE

JOSEPH E. SMITH, CLERK OF THE CIRCUIT COURT - SAINT LUCIE COUNTY
FILE # 4413316 OR BOOK 4109 PAGE 1878, Recorded 03/19/2018 11:42:42 AM

Prepared by and Return to:
S. A. Tarr
4521 PGA Blvd., #201
Palm Beach Gardens, FL 33418

Property Appraisers Parcel Identification
(Folio)Number(s): 2401-501-0022-000/5

Space Above This Line for Recording

This Quit Claim Deed is a corrective deed to define the proper ownership of said property.

QUIT-CLAIM DEED

THIS QUIT-CLAIM DEED, Executed this 19th day of March, 2018, by

316 Ocean, LLC, a Florida limited liability company first party, whose address is 4521 PGA Blvd., #201, Palm Beach Gardens, FL 33418, to **Steven Tarr, as Trustee, of the Steven Tarr Revocable Trust dated September 16, 2015**, second party, whose address is 4521 PGA Blvd., #201, Palm Beach Gardens, FL 33418:

(Wherever used herein the terms "first party" and "second party" shall include singular and plural, heirs, legal representatives, and assigns of individuals, and the successor and assigns corporations, wherever the context so admits or requires.)

WITNESSETH, that the said first party, for and in consideration of the sum of ten Dollars ($10.00), in hand paid by the said second party, the receipt whereof is hereby acknowledged, does hereby remise, release, and quit-claim unto the said second party forever, all the right, title, interest, claim, and demand which the said first party has in and to the following described lot, piece or parcel of land, situate, lying and being in the County of St. Lucie, State of Florida, to-wit:

The following property located at: 316 S. Ocean Drive, Fort Pierce, FL 34949 which is not the homestead of grantor or grantee:

Legal:

Lots 8 & 9, Block 3, Revised Map Fort Pierce Beach, according to the map or plat thereof as recorded in Plat Book 8, page 29, Public Records of St. Lucie County,

JOSEPH E. SMITH, CLERK OF THE CIRCUIT COURT - SAINT LUCIE COUNTY
FILE # 4413316 OR BOOK 4109 PAGE 1878, Recorded 03/19/2018 11:42:42 AM

Prepared by and Return to:
S. A. Tarr
4521 PGA Blvd., #201
Palm Beach Gardens, FL 33418

Property Appraisers Parcel Identification
(Folio)Number(s): 2401-501-0022-000/5

Space Above This Line for Recording

This Quit Claim Deed is a corrective deed to define the proper ownership of said property.

QUIT-CLAIM DEED

THIS QUIT-CLAIM DEED, Executed this 19th day of March, 2018, by

316 Ocean, LLC, a Florida limited liability company first party, whose address is 4521 PGA Blvd., #201, Palm Beach Gardens, FL 33418, to **Steven Tarr, as Trustee, of the Steven Tarr Revocable Trust dated September 16, 2015**, second party, whose address is 4521 PGA Blvd., #201, Palm Beach Gardens, FL 33418:

(Wherever used herein the terms "first party" and "second party" shall include singular and plural, heirs, legal representatives, and assigns of individuals, and the successor and assigns corporations, wherever the context so admits or requires.)

WITNESSETH, that the said first party, for and in consideration of the sum of ten Dollars ($10.00), in hand paid by the said second party, the receipt whereof is hereby acknowledged, does hereby remise, release, and quit-claim unto the said second party forever, all the right, title, interest, claim, and demand which the said first party has in and to the following described lot, piece or parcel of land, situate, lying and being in the County of St. Lucie, State of Florida, to-wit:

The following property located at: 316 S. Ocean Drive, Fort Pierce, FL 34949 which is not the homestead of grantor or grantee:

Legal:

Lots 8 & 9, Block 3, Revised Map Fort Pierce Beach, according to the map or plat thereof as recorded in Plat Book 8, page 29, Public Records of St. Lucie County,

Michelle Franklin, CFA -- Saint Lucie County Property Appraiser -- All rights reserved.

Property Identification

Site Address: 316 S OCEAN DR
Sec/Town/Range: 01/35S/40E
Map ID: 24/01A
Zoning: R4A

Parcel ID: 2401-501-0022-000-5
Account #: 14615
Use Type: 0800
Jurisdiction: Fort Pierce

Ownership

Steven Tarr (TR)
4521 PGA BLVD # 201
Palm Beach Gardens, FL 33418

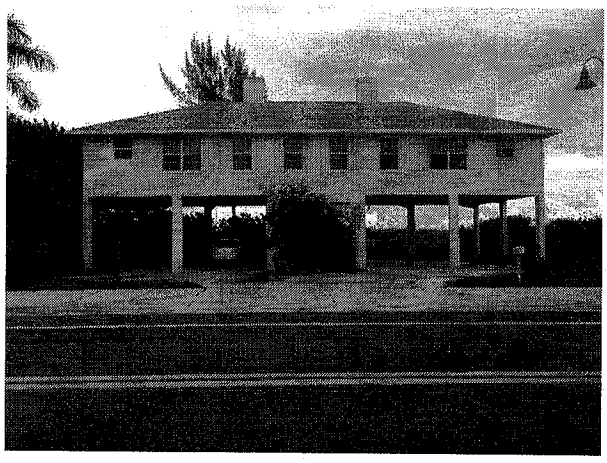

Legal Description

FT PIERCE BEACH S/D BLK 3 LOTS 8AND 9-LESS THAT PART LYG E OF LI IN PL BK 37-2- (OR 4022-2507: 4024-532; 4109-1878)

Current Values

Just/Market Value:	$623,200
Assessed Value:	$623,200
Exemptions:	$0
Taxable Value:	$623,200

Taxes for this parcel: SLC Tax Collector's Office
Download TRIM for this parcel: Download PDF

Total Areas

Finished/Under Air (SF):	1,944
Gross Area (SF):	4,608
Land Size (acres):	0.32
Land Size (SF):	13,860

This information is believed to be correct at this time but it is subject to change and is not warranted.
© Copyright 2019 Saint Lucie County Property Appraiser. All rights reserved.

Michelle Franklin, CFA - Saint Lucie County Property Appraiser

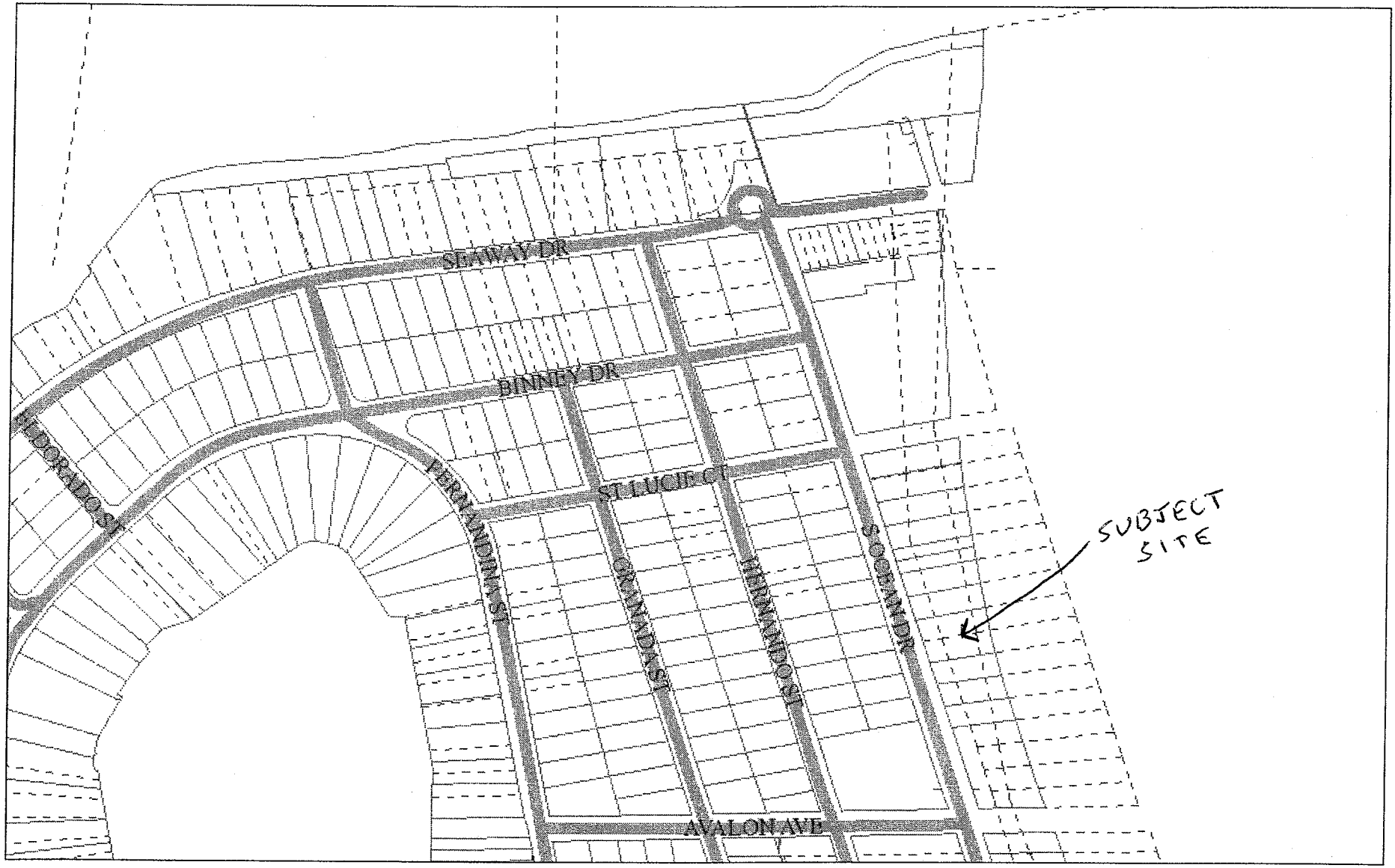

January 16, 2019

1:4,514

0 0.0375 0.075 0.15 mi

0 0.05 0.1 0.2 km

This information is deemed to be correct at this time but it is subject to change and is not warranted.
© Copyright 2019 Saint Lucie County Property Appraiser. All rights reserved.

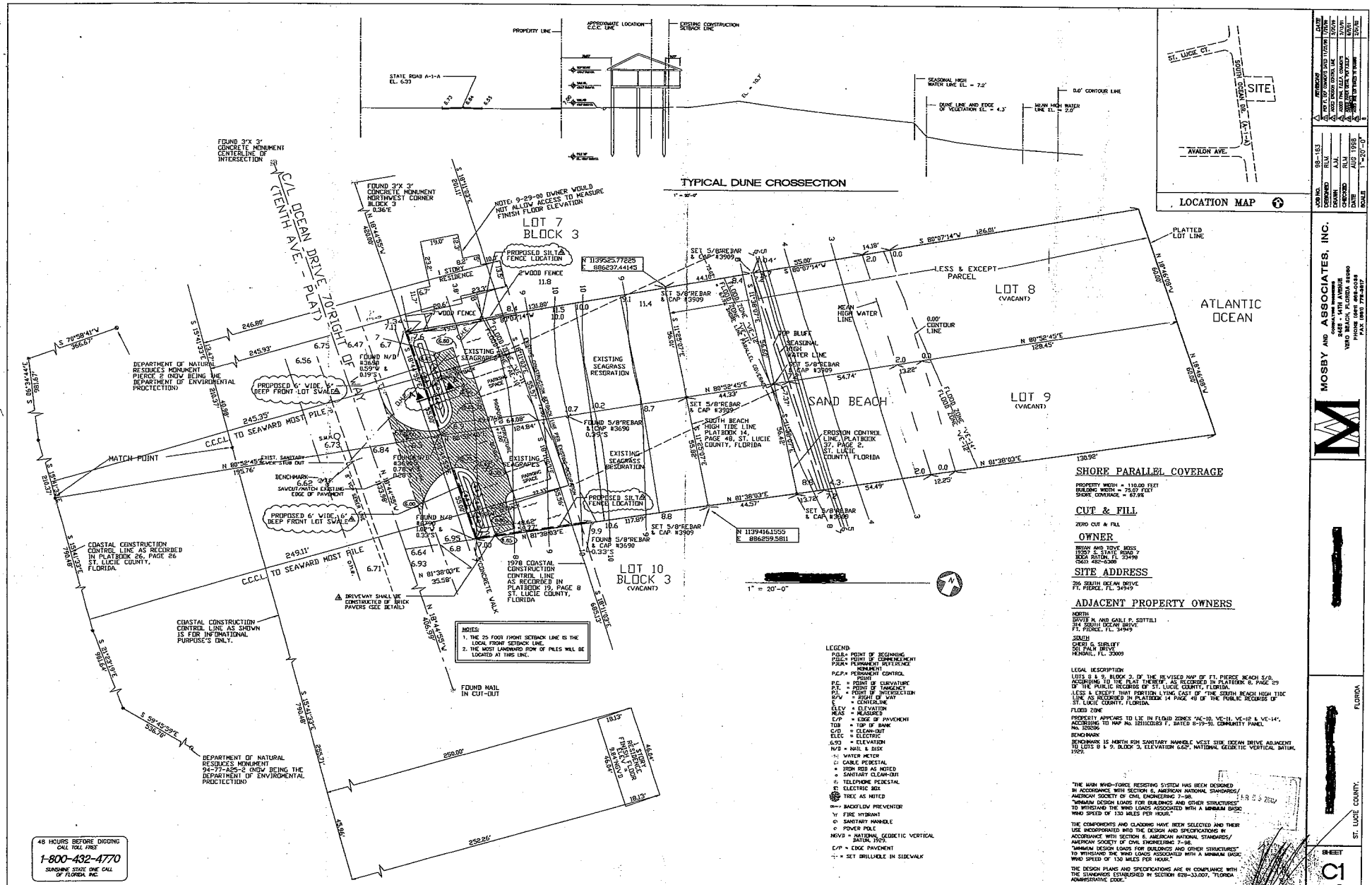
TYPICAL DUNE CROSSECTION
PROPERTY LINE
APPROXIMATE LOCATION C.C.C. LINE
EXISTING CONSTRUCTION SETBACK LINE
STATE ROAD A-1-A EL. 6.33
SEASONAL HIGH WATER LINE EL. = 7.2'
DUNE LINE AND EDGE OF VEGETATION EL. = 4.3'
MEAN HIGH WATER LINE EL. = 2.0'
8.0' CONTOUR LINE
LOCATION MAP
ST. LUCIE CT.
SOUTH OCEAN DR.
SITE
AVALON AVE.
FOUND 3"X 3" CONCRETE MONUMENT CENTERLINE OF INTERSECTION
FOUND 3"X 3" CONCRETE MONUMENT NORTHWEST CORNER BLOCK 3 0.36'E
CAL OCEAN DRIVE 70' RIGHT OF WAY (TENTH AVE. - PLAT)
NOTE: 9-29-00 OWNER WOULD NOT ALLOW ACCESS TO MEASURE FINISH FLOOR ELEVATION
LOT 7 BLOCK 3
PROPOSED SILT FENCE LOCATION
1 STORY RESIDENCE
WOOD FENCE
EXISTING SEAGRASS
PROPOSED 6' WIDE, 6" DEEP FRONT LOT SWALE
DEPARTMENT OF NATURAL RESOURCES MONUMENT PIERCE 2 (NOW BEING THE DEPARTMENT OF ENVIRONMENTAL PROTECTION)
MATCH POINT
EXIST. SANITARY SEWER STUB OUT
BENCHMARK 5.62 SAWCUT/MATCH EXISTING EDGE OF PAVEMENT
C.C.C.L. TO SEAWARD MOST PILE
COASTAL CONSTRUCTION CONTROL LINE AS RECORDED IN PLATBOOK 26, PAGE 26 ST. LUCIE COUNTY, FLORIDA.
COASTAL CONSTRUCTION CONTROL LINE AS SHOWN IS FOR INFORMATIONAL PURPOSE'S ONLY.
DEPARTMENT OF NATURAL RESOURCES MONUMENT 94-77-A25-2 (NOW BEING THE DEPARTMENT OF ENVIRONMENTAL PROTECTION)
FOUND NAIL IN CUT-OUT
DRIVEWAY SHALL BE CONSTRUCTED OF BRICK PAVERS (SEE DETAIL)
CONCRETE WALK
1978 COASTAL CONSTRUCTION CONTROL LINE AS RECORDED IN PLATBOOK 19, PAGE 8 ST. LUCIE COUNTY, FLORIDA
LOT 10 BLOCK 3 (VACANT)
NOTES:
1. THE 25 FOOT FRONT SETBACK LINE IS THE LOCAL FRONT SETBACK LINE.
2. THE MOST LANDWARD ROW OF PILES WILL BE LOCATED AT THIS LINE.
1 STORY RESIDENCE FINISH FLOOR ELEV. = 9.46'NGVD
LOT 8 (VACANT)
LESS & EXCEPT PARCEL
PLATTED LOT LINE
ATLANTIC OCEAN
MEAN HIGH WATER LINE
0.00' CONTOUR LINE
TOP BLUFF SEASONAL HIGH WATER LINE
SET 5/8"REBAR & CAP #3909
FOUND 5/8"REBAR & CAP #3690
SOUTH BEACH HIGH TIDE LINE PLATBOOK 14, PAGE 48 ST. LUCIE COUNTY, FLORIDA
EROSION CONTROL LINE, PLATBOOK 37, PAGE 2, ST. LUCIE COUNTY, FLORIDA
SAND BEACH
LOT 9 (VACANT)
FLOOD ZONE VE-14'
FLOOD ZONE VE-12'
N 1139525.77225 E 886237.44145
N 1139416.1555 E 886259.5811
1" = 20'-0"
LEGEND
POB= POINT OF BEGINNING
POC= POINT OF COMMENCEMENT
POR= PERMANENT REFERENCE MONUMENT
P.C.P.= PERMANENT CONTROL POINT
P.C. = POINT OF CURVATURE
P.T. = POINT OF TANGENCY
P.I. = POINT OF INTERSECTION
R/W = RIGHT OF WAY
℄ = CENTERLINE
ELEV = ELEVATION
MEAS = MEASURED
E/P = EDGE OF PAVEMENT
TOB = TOP OF BANK
C/O = CLEAN-OUT
ELEC = ELECTRIC
6.93 = ELEVATION
N/D = NAIL & DISK
WATER METER
CABLE PEDESTAL
IRON ROD AS NOTED
SANITARY CLEAN-OUT
TELEPHONE PEDESTAL
ELECTRIC BOX
TREE AS NOTED
BACKFLOW PREVENTOR
FIRE HYDRANT
SANITARY MANHOLE
POWER POLE
NGVD = NATIONAL GEODETIC VERTICAL DATUM, 1929.
E/P = EDGE PAVEMENT
= SET DRILLHOLE IN SIDEWALK
SHORE PARALLEL COVERAGE
PROPERTY WIDTH = 110.00 FEET
BUILDING WIDTH = 75.07 FEET
SHORE COVERAGE = 67.9%
CUT & FILL
ZERO CUT & FILL
OWNER
BRIAN AND TONY BOSS
1000 SO. STATE ROAD 7
MIAMI, FL. 33149
(561) 482-6389
SITE ADDRESS
316 SOUTH OCEAN DRIVE
FT. PIERCE, FL. 34949
ADJACENT PROPERTY OWNERS
NORTH
DAVID M. (AND GAILE P. SOTTILI)
314 SOUTH OCEAN DRIVE
FT. PIERCE, FL. 34949
SOUTH
CAROL G. SIERLOFF
501 PALM DRIVE
HENDRALL, FL. 33009
LEGAL DESCRIPTION
LOTS 8 & 9, BLOCK 2, OF THE REVISED MAP OF FT. PIERCE BEACH S/D, ACCORDING TO THE PLAT THEREOF, AS RECORDED IN PLATBOOK 8, PAGE 29 OF THE PUBLIC RECORDS OF ST. LUCIE COUNTY, FLORIDA.
LESS & EXCEPT THAT PORTION LYING EAST OF THE SOUTH BEACH HIGH TIDE LINE AS RECORDED IN PLATBOOK 14 PAGE 48 OF THE PUBLIC RECORDS OF ST. LUCIE COUNTY, FLORIDA.
FLOOD ZONE
PROPERTY APPEARS TO LIE IN FLOOD ZONES "AE-10, VE-11, VE-12 & VE-14", ACCORDING TO MAP No. 120108 0163 F, DATED 8-19-91, COMMUNITY PANEL No. 120286
BENCHMARK
BENCHMARK IS NORTH RIM SANITARY MANHOLE WEST SIDE OCEAN DRIVE ADJACENT TO LOTS 8 & 9, BLOCK 3, ELEVATION 6.62', NATIONAL GEODETIC VERTICAL DATUM, 1929.
"THE MAIN WIND-FORCE RESISTING SYSTEM HAS BEEN DESIGNED IN ACCORDANCE WITH SECTION 6, AMERICAN NATIONAL STANDARDS/ AMERICAN SOCIETY OF CIVIL ENGINEERING 7-98. "MINIMUM DESIGN LOADS FOR BUILDINGS AND OTHER STRUCTURES" TO WITHSTAND THE WIND LOADS ASSOCIATED WITH A MINIMUM BASIC WIND SPEED OF 130 MILES PER HOUR."
THE COMPONENTS AND CLADDING HAVE BEEN SELECTED AND THEIR USE INCORPORATED INTO THE DESIGN AND SPECIFICATIONS IN ACCORDANCE WITH SECTION 6, AMERICAN NATIONAL STANDARDS/ AMERICAN SOCIETY OF CIVIL ENGINEERING 7-98. "MINIMUM DESIGN LOADS FOR BUILDINGS AND OTHER STRUCTURES" TO WITHSTAND THE WIND LOADS ASSOCIATED WITH A MINIMUM BASIC WIND SPEED OF 130 MILES PER HOUR.
THE DESIGN PLANS AND SPECIFICATIONS ARE IN COMPLIANCE WITH THE STANDARDS ESTABLISHED IN SECTION 620-33.007, "FLORIDA ADMINISTRATIVE CODE."
RANDALL LEE MOSBY, FL REG #22286
48 HOURS BEFORE DIGGING CALL TOLL FREE 1-800-432-4770 SUNSHINE STATE ONE CALL OF FLORIDA, INC.
MOSSBY AND ASSOCIATES, INC.
CONSULTING ENGINEERS
2488 - 14TH AVENUE
VERO BEACH, FLORIDA 32960
PHONE (561) 778-6662
FAX (561) 778-6672
ST. LUCIE COUNTY, FLORIDA
SHEET C1 OF 2
98-183
JOB NO. 98-183
DESIGNED RLM
DRAWN RLM
CHECKED RLM
DATE AUG 1998
SCALE 1"=20'-0"
DATE 12/1/00
DATE 12/1/00
DATE 8/5/01
DATE 12/1/00
FEB 21 2002

SURVEY

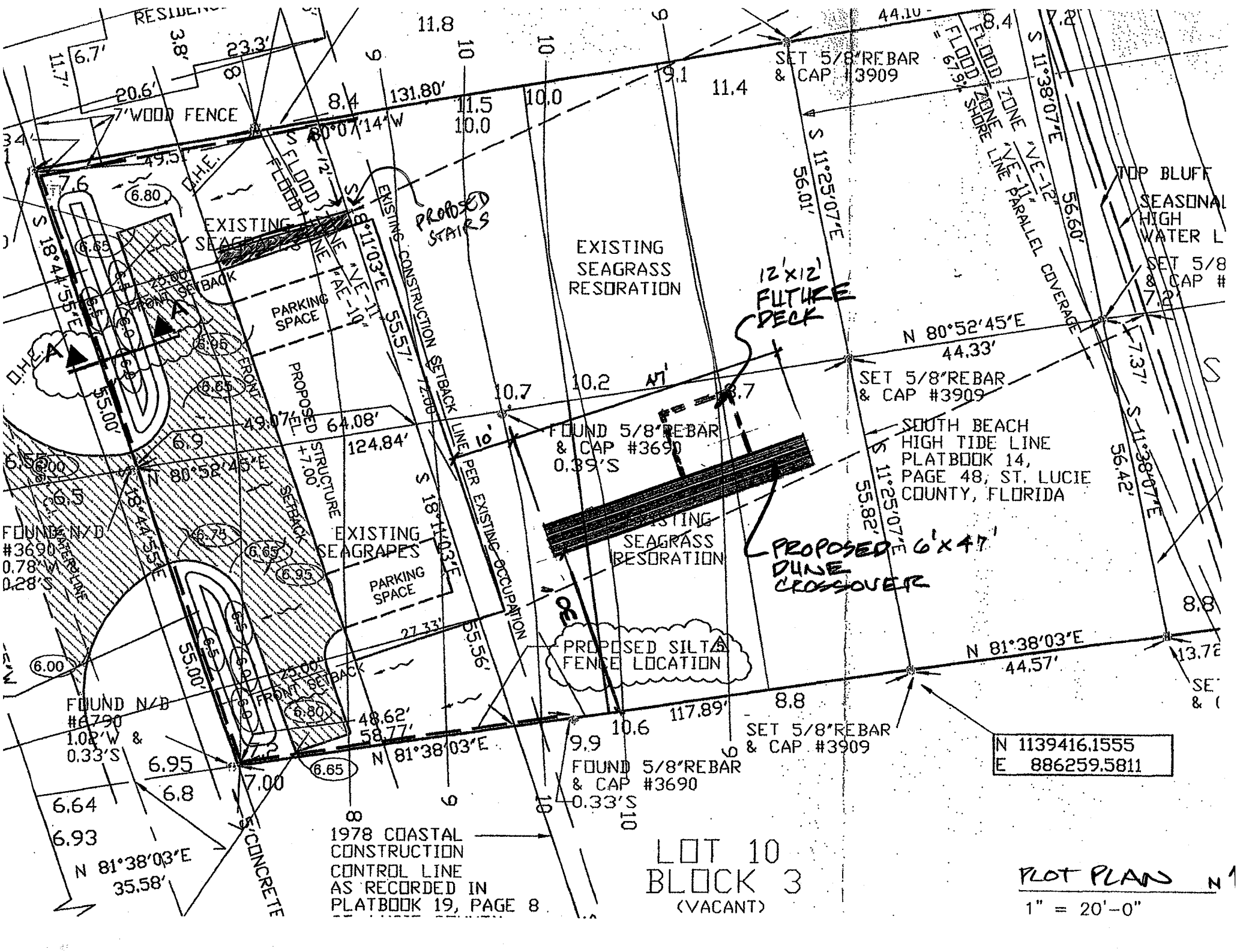

EXISTING SEAGRASS RESORATION
PROPOSED STAIRS
12'x12' FUTURE DECK
PROPOSED 6'x47' DUNE CROSSOVER
EXISTING SEAGRAPES
PARKING SPACE
PROPOSED STRUCTURE EL. +7.00'
EXISTING CONSTRUCTION SETBACK LINE PER EXISTING OCCUPATION
FLOOD ZONE "VE-11" FLOOD ZONE "AE-10"
FLOOD ZONE "VE-12" FLOOD ZONE "VE-11" SHORE LINE PARALLEL COVERAGE
SET 5/8"REBAR & CAP #3909
FOUND 5/8"REBAR & CAP #3690 0.39'S
FOUND 5/8"REBAR & CAP #3690 0.33'S
SOUTH BEACH HIGH TIDE LINE PLATBOOK 14, PAGE 48, ST. LUCIE COUNTY, FLORIDA
TOP BLUFF
SEASONAL HIGH WATER L
PROPOSED SILTA FENCE LOCATION
FOUND N/D #3690 0.78'W 0.28'S
FOUND N/D #6790 1.02'W & 0.33'S
7'WOOD FENCE
N 80°52'45"E 44.33'
N 81°38'03"E 44.57'
N 81°38'03"E 35.58'
N 81°38'03"E
S 80°07'14"W 131.80'
S 18°44'55"E 55.00'
S 18°11'03"E 55.57'
S 18°11'03"E 55.56'
S 11°25'07"E 56.01'
S 11°25'07"E 55.82'
S 11°38'07"E 56.60'
S 11°38'07"E 56.42'
N 80°52'45"E
FRONT SETBACK
1978 COASTAL CONSTRUCTION CONTROL LINE AS RECORDED IN PLATBOOK 19, PAGE 8
N 1139416.1555
E 886259.5811
LOT 10
BLOCK 3
(VACANT)
PLOT PLAN
1" = 20'-0"

FLORIDA DEPARTMENT OF ENVIRONMENTAL PROTECTION
Division of Water Resource Management
Coastal Construction Control Line Program
2600 Blair Stone Road, M.S. 3522
Tallahassee, FL 32399-2400
Phone: (850) 245-8336

Permit No. 8033417 - SL

No. of Pages Attached: 9

FIELD PERMIT PURSUANT TO SECTION 161.053 OR 161.052, FLORIDA STATUTES

FINDINGS OF FACT AND CONCLUSION OF LAW: The request for a field permit was considered by the staff designee of the Department of Environmental Protection and found to be in compliance with the requirements of Chapter 62B-33, Florida Administrative Code (F.A.C.). Approval is specifically limited to the activity in the stated location and by the project description, approved plans (if any), attached standard conditions, and any special conditions stated below pursuant to Paragraph 161.053(5), Florida Statutes (F.S.). This permit may be suspended or revoked in accordance with Section 62-4.100, F.A.C.

PROJECT LOCATION:

S0200/S0300 of DEP R-35
316 S. Ocean (Steve Tarr)
Fort Pierce

PROJECT DESCRIPTION:

As proposed and in location(s) specified permittee may construct stairway along north side of dwelling from upper floor to ground level. In addition, permittee is also authorized to construct multi-family dune walkover in area generally void of native dune vegetation.

SPECIAL PERMIT CONDITIONS: The permit is valid only after all applicable federal, state, and local permits are obtained and does not authorize contravention of local setback requirements or zoning or building codes. This permit and public notice shall be posted on the site immediately upon issuance and shall remain posted along with local approval until the completion of any activity authorized by this permit. Other special conditions of this permit include:

Standard field permit conditions and dune walkover guidelines prevail.
No additions and/or modifications w/o prior DEP approval.
All seaward work on dune walkover must be complete prior to marine turtle nesting season (3/1/19)
Any impacted/removed native dune vegetation must be replaced/replanted in equal square footage on other areas of the dune, if applicable.

STANDARD PERMIT CONDITIONS: The permittee shall comply with the attached standard field permit conditions.

APPLICANT INFORMATION: I hereby certify that I am either: (1a) the owner of the subject property or (1b) I have the owner's consent to secure this permit on the owner's behalf; and that (2) I shall obtain any applicable licenses or permits which may be required by federal, state, county, or municipal law prior to commencement of the authorized work; (3) I acknowledge that the authorized work is what I requested; and (4) I accept responsibility for compliance with all permit conditions.

Applicant's Signature _____ Date 1/1/2019 Telephone No. (561 622-3386

Applicant's Printed Name Steve Tarr Address 316 S Ocean Dr Ft. Pierce, FL 34949

If applicant is an agent:

See above / / ( )

Printed name of property owner *Property owner's address* *Property owner's telephone no.*

DEPARTMENT FINAL ACTION AND FILING AND ACKNOWLEDGMENT: This field permit is approved on behalf of the Department of Environmental Protection by the undersigned staff designee, and filed on this date, pursuant to section 120.52, F.S., with the undersigned designated Deputy Clerk, receipt of which is hereby acknowledged.

Jason M. Spanier / Jason M. Spanier / 12/27/18

Staff Designee/Deputy Clerk *Printed Name of Designee/Deputy Clerk* *Date*

EXPIRATION DATE: 02/28/19

12/27/19 for landward items

(Emergency permits issued pursuant to Section 62B-33.014, F.A.C., are valid for no more than ninety days and other field permits are valid for no more than 12 months. The staff designee may specify a shorter time limit.)

EMERGENCY PERMIT: ☐ YES ☑ NO Approved plans are attached: ☑ YES ☐ NO

POST PERMIT AND PUBLIC NOTICE CONSPICUOUSLY ON THE SITE

PUBLIC NOTICE

The foregoing constitutes final agency action. Any person whose substantial interests are affected by any decision made by the Department on the Field Permit has a right to request an administrative hearing in accordance with the provisions of Sections 120.569 and 120.57, F.S. The request for an administrative hearing must comply with the provisions of Rule 28-106.201, F.A.C., and must be received by the Department (at the address given below) within twenty-one (21) days from the date of this notice.

When the Department receives an adequate and timely filed request for hearing, the Department will request the assignment of an administrative law judge. Once the administrative law judge is requested, the Division of Administrative Hearings will have jurisdiction over the formal proceeding and the Department (as the referring agency) will take no further action with respect to the proceeding except as a party litigant.

Section 120.54(5)(b)4, F.S., and Rule 28-106.201(2), F.A.C., explain that the following items must be included in a petition for a formal administrative hearing

(a) The name and address of each agency affected and each agency's file or identification number, if known;

(b) The name, address, any e-mail address, any facsimile number, and telephone number of the petitioner, if the petitioner is not represented by an attorney or a qualified representative; the name, address, and telephone number of the petitioner's representative, if any, which shall be the address for service purposes during the course of the proceedings; and an explanation of how the petitioner's substantial interests will be affected by the agency determination;

(c) A statement of when and how the petitioner received notice of the agency decision;

(d) A statement of all issues of material fact disputed by the petitioner, or a statement that there are no disputed facts;

(e) A concise statement of the ultimate facts alleged, including a statement of the specific facts that the petitioner contends warrant reversal or modification of the Department's action;

(f) A statement of the specific rules or statutes the petitioner contends require reversal or modification of the Department's action, including an explanation of how the alleged facts relate to the specific rules or statutes; and

(g) A statement of the relief sought by the petitioner, stating precisely the action that the petitioner wants the Department to take with respect to its action.

A person may request an extension of time to petition for an administrative hearing. The person filing the request for extension must do so within the time limits for filing a petition described above. The request must state why an extension of time is needed. The Department will grant an extension only when good cause is shown.

If a petition or a request for time extension is filed, further order of the Department becomes necessary to effectuate this Field Permit. Accordingly, the Department's final action may be different from the position taken in this notice. Actions undertaken by any person under this permit, pending the lapse of time allowed for the filing of such a request for hearing, may be subject to modification, removal, or restoration.

Failure to petition within the allowed time frame constitutes waiver of any right that a person has to request a hearing under Section 120.57, F.S., and to participate as a party to the proceeding. If a legally sufficient petition for hearing is not timely received, this notice constitutes final agency action.

When this order becomes final and is filed with the Department Clerk, any party to the order has the right to seek judicial review under Section 120.57, F.S., and Rule 9.030(b)1(c) and 9.110, Florida Rules of Appellate Procedure. A notice of appeal must be filed within thirty (30) days with both the Department Clerk (see address below) and with the appropriate district court of appeal. The notice filed with the district court must be accompanied by the filing fee specified in Section 35.33(3), F.S. Any subsequent intervention will be only by the approval of the presiding officer on motion filed under Rules 28-5.207 or 60Q-2.010, F.A.C.

All requests for hearings are to be filed with the Department at the following address:

Florida Department of Environmental Protection
Office of General Counsel
Department Clerk
3900 Commonwealth Boulevard Mail Station 35
Tallahassee, Florida 32399-3000

STANDARD FIELD PERMIT CONDITIONS

The following conditions shall apply to **FIELD PERMITS** (unless waived by DEP or modified by special permit condition). In the event of a conflict between a field permit condition and a special permit condition, the special condition shall prevail.

1) The permittee shall carry out the construction or activity for which the permit was granted in accordance with the plans and specifications that were approved by DEP as part of the permit. Any deviation there from shall be grounds for suspension of the work and revocation of the permit pursuant to Section 120.60(7), F.S., and may result in assessment of civil fines or issuance of an order to alter or remove the unauthorized structure, or both. No other construction or activities shall be conducted. No modifications to project size, location, or structural design are authorized. A copy of the permit shall be conspicuously displayed at the project site.

2) The permittee shall conduct the construction or activity authorized under the permit using extreme care to prevent any adverse impacts to the beach and dune system, marine turtles and their nests and habitats, or adjacent property and structures.

3) The permittee shall allow any duly authorized member of the staff to enter upon the premises associated with the project authorized by the permit for the purpose of ascertaining compliance with the terms of the permit and with the rules of DEP, until all construction or activities authorized or required in the permit have been completed and the project accepted by DEP.

4) The permittee shall hold and save the State of Florida, DEP, its officers and employees, harmless from any damage (no matter how occasioned and no matter what the amount) to persons or property that might result from the construction or activity authorized under the permit and from any and all claims and judgments resulting from such damage.

5) The permittee shall allow DEP to use all submitted records, notes, monitoring data, and other information relating to construction or any activity under the permit for any purpose it may deem necessary or convenient, except where such use is otherwise specifically forbidden by law.

6) Construction traffic shall not operate and building materials shall not be stored on vegetated areas seaward of the control line, unless specifically authorized by the permit. If (in the opinion of DEP staff) this requirement is not being met, positive control measures shall be provided by the permittee at the direction of DEP staff. Such measures may include temporary fencing, designated access roads, adjustment of construction sequence, or other requirements.

7) The permittee shall not disturb existing beach and dune topography and vegetation except as expressly authorized in the permit. Before the project is considered complete, any disturbed topography or vegetation shall be restored (as prescribed in the permit) with suitable fill material or revegetated with appropriate beach and dune vegetation.

8) The fill material shall be obtained from a source landward of the control line and shall consist of sand which is similar to that already on the site in both grain size and coloration. This fill material shall be free of construction debris, rocks, or other foreign matter. A sample of the sand shall be provided to the staff representative of the Bureau of Beaches and Coastal Systems during the preconstruction conference.

9) If surplus sand fill results from any approved excavation seaward of the CCCL, such material shall be distributed seaward of the CCCL on the site, as directed by DEP staff (unless otherwise specifically authorized by the permit).

10) Any native salt-resistant vegetation destroyed during construction shall be replaced with plants of the same species or, by authorization of DEP, with other native salt-resistant vegetation suitable for beach and dune stabilization. Unless otherwise specifically authorized by the staff, all plants installed in beach and coastal areas (whether to replace vegetation displaced, damaged, or destroyed during construction or otherwise) shall be of species indigenous to Florida beaches and dunes (i.e., sea oats, sea grape, saw palmetto, panic grass, salt meadow hay cord grass, seashore salt grass, and railroad vine).

11) All topographic restoration and revegetation work is subject to approval and acceptance by DEP staff.

12) If not specifically authorized elsewhere in this permit, no operation, transportation, or storage of equipment or materials is authorized seaward of the dune crest or rigid coastal structure during the marine turtle-nesting season. The marine turtle-nesting season is May 1 through October 31 in all counties (except Brevard, Indian River, St. Lucie, Martin, Palm Beach and Broward counties where marine turtle nesting occurs during the period of March 1 through October 31).

13) If not specifically authorized elsewhere in this permit, no temporary lighting of the construction area is authorized at any time during the marine turtle-nesting season and no additional permanent exterior lighting is authorized.

14) This permit has been issued to a specified property owner and is not valid for any other person.

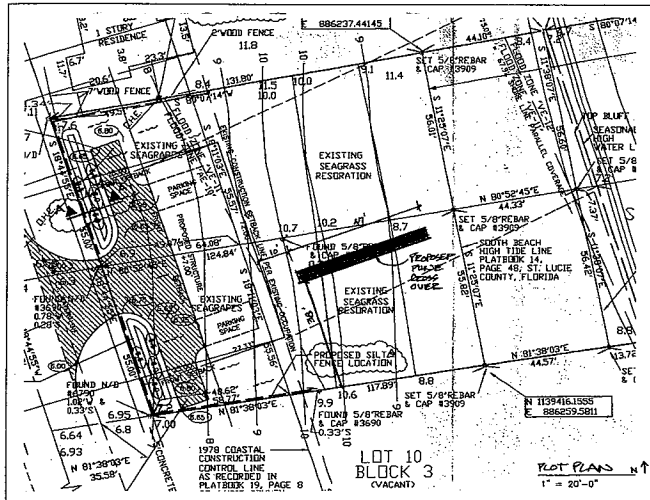

PLOT PLAN
1" = 20'-0"

STRUCTURAL NOTES:

1. STRUCTURAL LUMBER TO BE PRESSURE TREATED SOUTHERN PINE #2 GRADE OR BETTER W/ 1000 PSI MIN. FIBERSTRESS VALUE.
2. ALL COMPONENTS OF THIS STRUCTURE HAVE BEEN DESIGNED & SELECTED TO WITHSTAND WIND FORCES PER THE FLORIDA BUILDING CODE, 2014 EDITION.
3. ALL FASTENERS, STRAPS, BOLTS, NAILS, SCREWS (ETC) TO BE STAINLESS STEEL OR HOT DIPPED GALV.

Certification for Design Load Compliance

1. DESIGN CODE: Florida FBR Pre-Fab code 2017 Edition w/20___ supplements using ASCE 7-10
2. Structure Design In: ___ Enclosed ___ Partially Enclosed X Open Building
3. Risk Category: ___ I X II ___ III ___ IV Exposure Category: ___ B ___ C ___ D Adjustment coefficient 1.47
4. Design Wind Velocity 165 mph ___ ASD ___ LRFD End Zone Width 4 ft.
5. Mean Roof Height: 6 ft. Roof Pitch: ___ 12 Parapet ___ ft.
6. Components & Cladding Design Pressure used: (PSF, based on Actual sq. ft. @ 30' MRH (worst case)
   Zone 1: N/A Zone 2: N/A Zone 3: N/A Zone 4: 43.3 Zone 5: 52.2 Garage: N/A
7. Design Loads: Floor: 80 PSF Roof/Dead: ___ PSF Roof/Live ___ PSF Balcony: 80 PSF
   Dock: ___ PSF Deck: 20 PSF Stairs: ___ PSF Fence: ___ PSF Railing: 50 PSF
8. Were Shear Walls Considered for Structure? X Yes ___ Not Applicable Explain Why Not:
9. Is a Continuous Load Path provided? X Yes ___ Not applicable Explain Why Not:

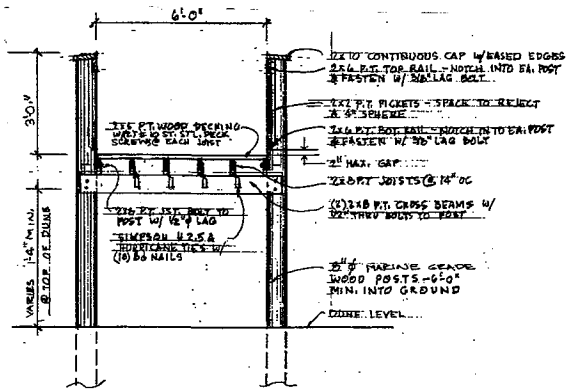

SECTION @ CROSS OVER
1/2"

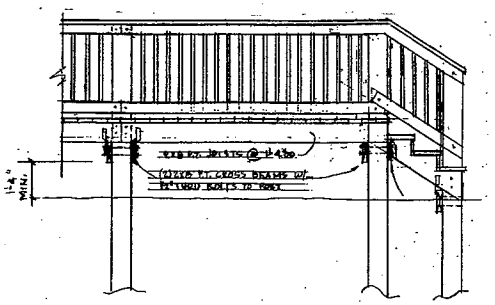

SECTION @ STAIR
1/2"

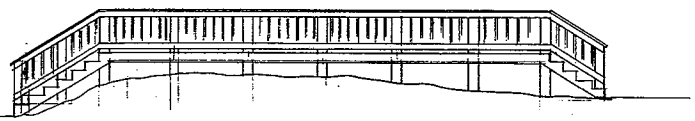

ELEVATION
1/4"

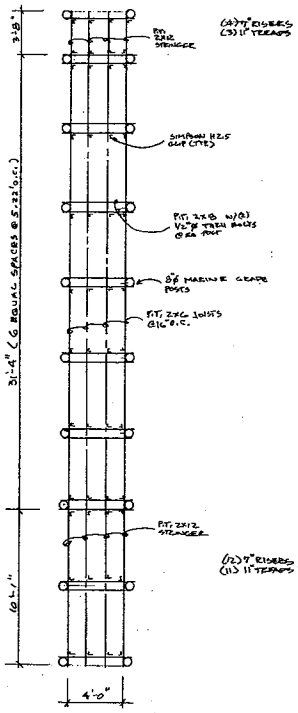

FRAMING PLAN
1/4"

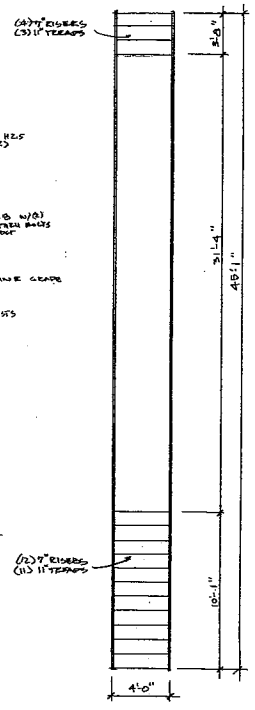

FLOOR PLAN
1/4"

ARCHITECT

Architectonic Inc

805 DELAWARE AVENUE
FORT PIERCE, FLORIDA 34950
T: 772 460 7751
F: 772 460 4244

WWW.ARCHITECTONICINC.COM

STATE REG # AA26003348

COPYRIGHT 2017

PROJECT

TARR

ELEVATOR / STAIR RENOVATIONS
FT. PIERCE, FLORIDA

CLIENT

CONSULTANTS

REGISTRATION

M. Sl

MICHAEL J. SEAL, AIA
AR96898

REVISIONS

NO.	DATE	REVISION

KEY PLAN

SHEET TITLE / SHEET NUMBER

A-1 OF 1

PROJECT NUMBER R18121A
DATE 12/13/18
PERMIT

TARR

Certification for Design Load Compliance

1. DESIGN CODE: Florida Exp FBC-Exp Bldg Code 2017 Edition w/20___ supplements using ASCE 7-10
2. Structure Design is: ___ Enclosed ___ Partially Enclosed X Open Building
3. Risk Category: ___ I X II ___ III ___ IV Exposure Category: ___ B ___ C X D Adjustment coefficient 1.49
4. Design Wind Velocity 165 mph ___ ASD ___ LRFD End Zone Width 4 ft.
5. Mean Roof Height 16 ft. Roof Pitch: 1/4 : 12 Parapet ___ ft.
6. Components & Cladding Design Pressure used: PSF, based on Actual sq. ft. @ 15 MPH (worst case)
   Zone 1: N/A Zone 2: N/A Zone 3: N/A Zone 4: 52.7 Zone 5: 57.7 Garage: N/A
7. Design Loads: Floor: 80 PSF Roof/Deck: N/A PSF Roof/Live: N/A PSF Balcony: 80 PSF
   Dock: ___ PSF Deck: ___ PSF Stairs: 80 PSF Fence: ___ PSF Railing: 50 PSF
8. Were Shear Walls Considered for Structure? X Yes ___ Not Applicable Explain Why Not:
9. Is a Continuous Load Path provided? X Yes ___ Not applicable Explain Why Not:

STRUCTURAL NOTES:

1. STRUCTURAL LUMBER TO BE HEM-FIR #2 GRADE OR BETTER WITH 1000 P.S.I. MIN. FIBER STRESS VALUE.
2. CONCRETE SLABS AND FOOTINGS TO BE 2500 P.S.I. MIN.
3. REINFORCING STEEL SHALL BE GRADE 60 OR BETTER WITH 30" MIN. LAP.
4. CONCRETE COVER OVER REINFORCING STEEL:
   FOOTINGS 3"
5. FILL (SOIL) SHALL BE PLACED IN LIFTS NOT TO EXCEED 12" AND COMPACTED TO A MINIMUM OF 95% MODIFIED PROCTOR DENSITY.
6. ALL COMPONENT OF THIS STRUCTURE HAVE BEEN DESIGNED & SELECTED TO WITHSTAND WIND FORCES OF THE FLORIDA BUILDING CODE 2017 EDITION PER WIND LOAD COMPLIANCE.
7. WINDOW AND DOOR ASSEMBLY COMPONENTS TO BE CERTIFIED BY MANUFACTURER FOR WIND FORCES OF THE FLORIDA BUILDING CODE 2017 EDITION PER WIND LOAD COMPLIANCE DESIGN PRESSURES.
8. FOR METHOD OF ATTACHMENT FOR DOORS AND WINDOWS, SEE PRODUCT REVIEW AFFIDAVIT.

NOTE: ALL SIMPSON STRONG TIE PRODUCTS IN CONTACT WITH TREATED LUMBER SHALL HAVE A MINIMUM Z-MAX COATING OR BETTER.

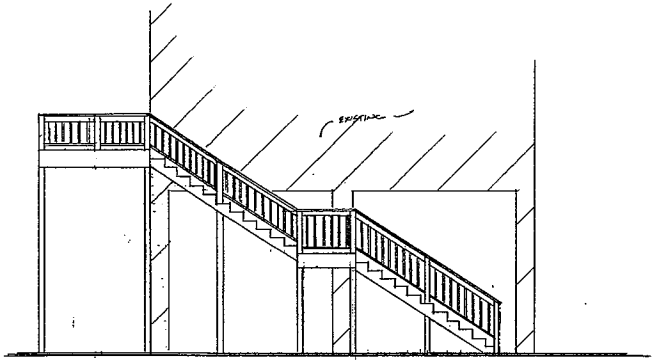

SIDE ELEVATION
1/4"

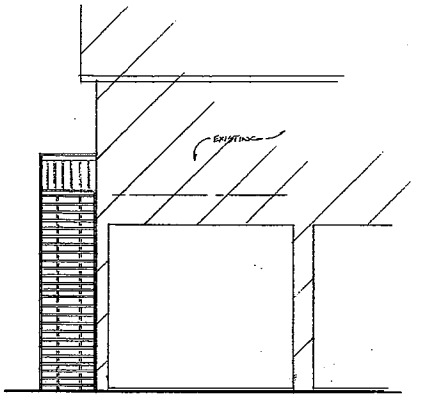

FRONT ELEVATION
REAR ELEVATION SIMILAR
1/4"

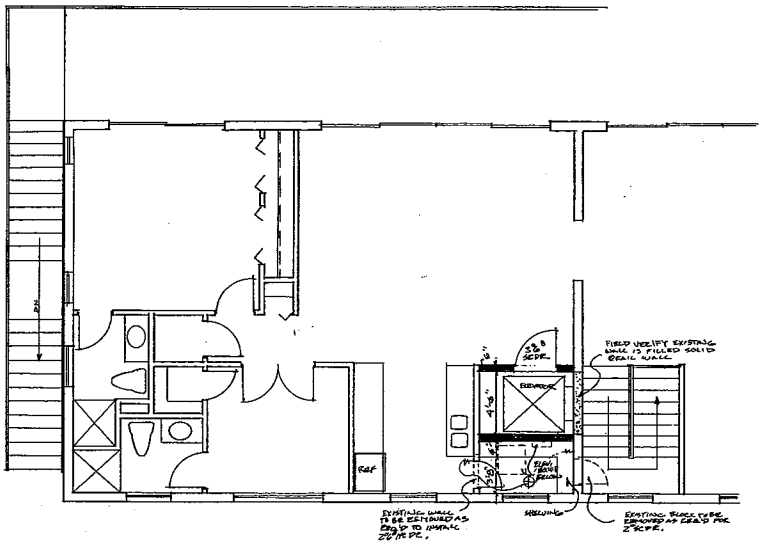

SECOND FLOOR PLAN
1/4"

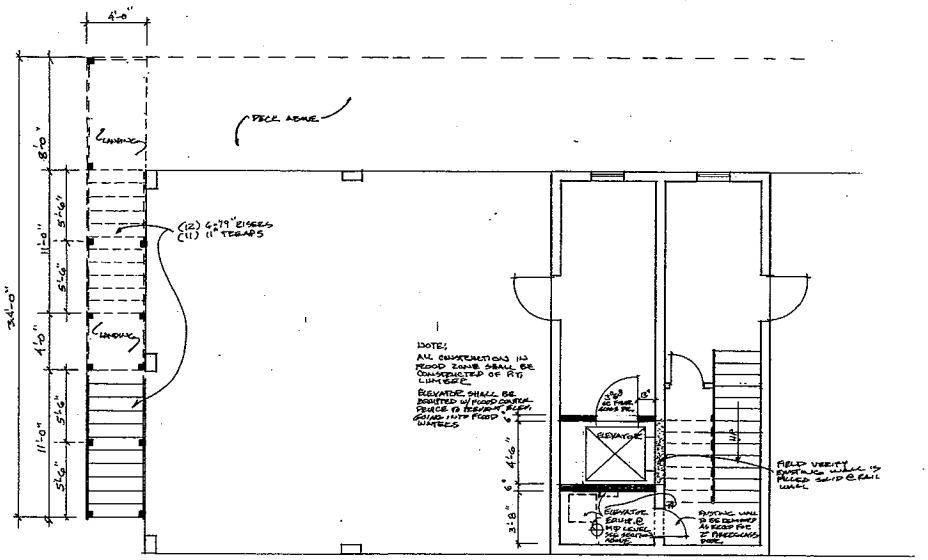

FIRST FLOOR PLAN
1/4"

ARCHITECT

Architectonic Inc

806 DELAWARE AVENUE
FORT PIERCE, FLORIDA 34950
T: 772 460 7751
F: 772 460 4244

WWW.ARCHITECTONICINC.COM

STATE REG # AA26003348

COPYRIGHT 2017

PROJECT

TARR
ELEVATOR / STAIR RENOVATIONS
FT. PIERCE, FLORIDA

CLIENT

CONSULTANTS

REGISTRATION

M.Sl

MICHAEL J. SEAL, AIA
AR96398

REVISIONS

NO.	DATE	REVISION

KEY PLAN

SHEET TITLE / SHEET NUMBER

A-1 OF 2

PROJECT NUMBER R18121
DATE 12/13/18
PERMIT

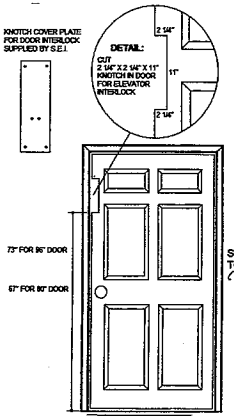

SHAFT DOORS ARE REQUIRED TO BE SOLID CORE
(FIBERGLASS OR GRAND FLOOR)

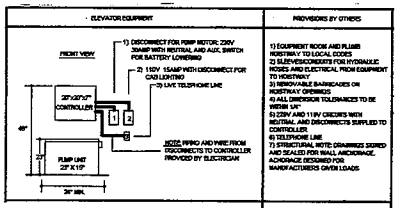

ELEVATOR SPECIFICATIONS

COMPLY WITH ASME A 17.1
TYPE: HYDRAULIC
CAPACITY: 950LBS
SPEED: 45FPM
CONTROLLER: PLC
DOOR LOCKS:
RAILS: 16" X 8LB
RAIL BRACKET: FORMED STEEL
SUSPENSION: 3/8" AIRCRAFT CABLE
SUSPENSION RATING: 14,400LBS CA.
SUSPENSION END: SHACKLE/ BUTTON
CAR SLING: FORMED STEEL
PLATFORM: 1 1/2"
CAB WALLS: 304
CAB ROOF: 304
CAR STATION: 14 GA
PHONE: JACK/ BOX
HANDRAIL: 32"
GATE: SCISSOR FOLDING
GATE SWITCH: GAL TYPE
PLUNGER: 2 3/4"
CYLINDER: 4"
POWER UNIT: SUBMERSIBLE
OVERLOAD: THERMAL
MOTOR: 4 HP
PUMP: 3GL
SHEAVE: 19" FORMED STEEL
GUIDE SHOES: ALUMINUM

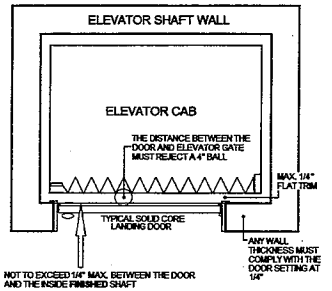

NOT TO EXCEED 1/4" MAX. BETWEEN THE DOOR AND THE INSIDE FINISHED SHAFT

MAKE SURE TO ALLOW FOR INSIDE FINISHING, FURRING AND DRYWALL, STUCCO, ECT. 1/4" FROM THE DOOR TO THIS FINISHES IS THE MAX.

THERE IS NO WIGGLE ROOM HERE!

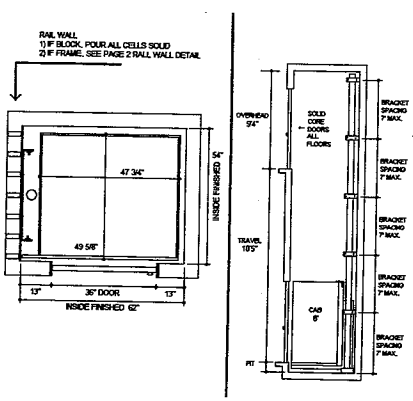

NOTES:

DRYWALL SHALL CONFORM WITH SECTION R702.3.1 OF THE FLORIDA BUILDING RESIDENTIAL CODE.

CERAMIC TILE IN TUB / SHOWER COMPARTMENTS SHALL CONFORM WITH SECTION R702.4 OF THE FLORIDA BUILDING RESIDENTIAL CODE.

WALL AND CEILING FINISHES SHALL HAVE A FLAME SPREAD CLASSIFICATION OF NOT GREATER THAN 200 AND A SMOKE-DEVELOPED INDEX OF NOT GREATER THAN 450.

ATTIC INSULATION SHALL HAVE A CRITICAL RADIANT FLUX NOT LESS THAN 0.12 WATT PER SQUARE CENTIMETER WITH A FLAME SPREAD NOT EXCEEDING 25 WITH AN ACCOMPANYING SMOKE-DEVELOPED INDEX NOT EXCEEDING 450.

FOAM BLOCK INSULATION SHALL HAVE A FLAME SPREAD OF NOT MORE THAN 75 AND SMOKE - DEVELOPED INDEX OF NOT MORE THAN 450.

TABLE R301.2(1)
CLIMATIC AND GEOGRAPHIC DESIGN CRITERIA

GROUND SNOW LOAD	WIND DESIGN		SEISMIC DESIGN CATEGORY[f]	SUBJECT TO DAMAGE FROM			WINTER DESIGN TEMP[e]	ICE BARRIER UNDERLAYMENT REQUIRED[h]	FLOOD HAZARD[g]	AIR FREEZING INDEX[i]	MEAN ANNUAL TEMP[j]
	Speed[d] (mph)	Topographic effects[k]		Weathering[a]	Frost line depth[b]	Termite[c]					
NA	See Fig. R301.2(4)	NA	NA	Negligible	NA	Very Heavy		NA		NA	NA

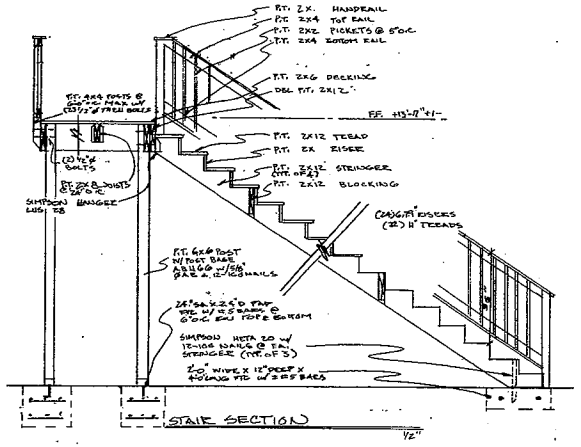

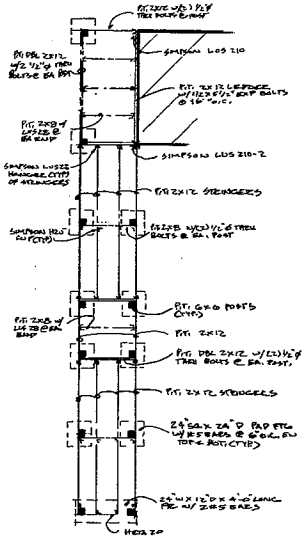

STAIR FRAMING PLAN
1/4"

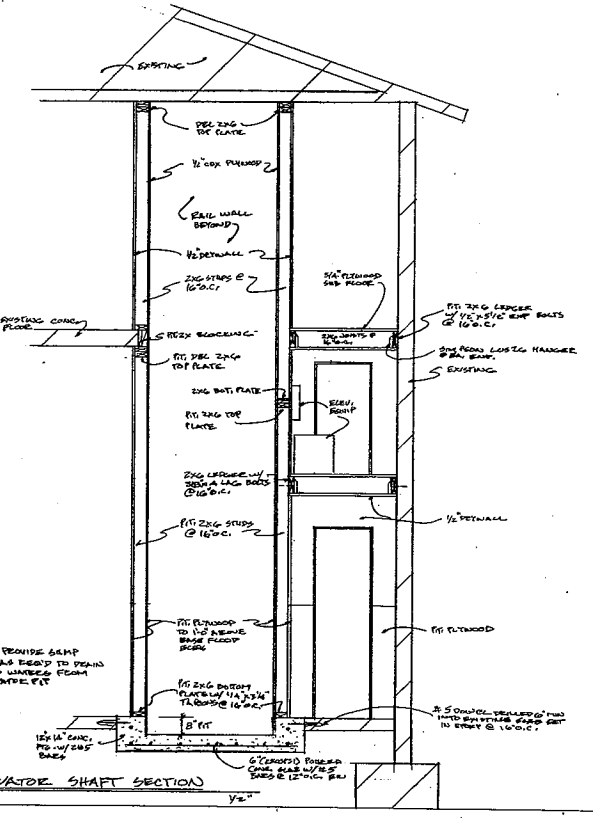

ARCHITECT

Architectonic Inc

808 DELAWARE AVENUE
FORT PIERCE, FLORIDA 34950
T: 772 460 7751
F: 772 460 4244

WWW.ARCHITECTONICINC.COM

STATE REG # AA26003348

COPYRIGHT 2017

PROJECT

TARR

ELEVATOR / STAIR
RENOVATIONS
FT. PIERCE, FLORIDA

CLIENT

CONSULTANTS

REGISTRATION

M. SEAL

MICHAEL J. SEAL, AIA
AR26698

REVISIONS

NO.	DATE	REVISION

KEY PLAN

SHEET TITLE / SHEET NUMBER

A-2 OF 2

PROJECT NUMBER 2.19121

DATE 12/13/18

PERMIT

MSJ

Beach and Dune Walkover Guidelines

Florida Department of Environmental Protection
Division of Water Resource Management
Bureau of Beaches and Coastal Systems
3900 Commonwealth Boulevard, MStation
Tallahassee, Florida 32399-3000
(850) 488-7708

On many of Florida's beaches, sand dunes and coastal vegetation provide significant protection to upland property, upland development, and the beach dune system. The Florida Department of Environmental Protection (DEP) encourages the design of beach access, including beach and dune walkovers, to protect the dune topography and dune vegetation from pedestrian traffic and allow for the natural recovery of damaged or eroded dunes.

PERMIT REQUIREMENTS

A permit from DEP is required for construction of walkovers on most sandy beaches fronting on the open waters of the Atlantic Ocean or Gulf of Mexico. In areas where a Coastal Construction Control Line (CCCL) has been established pursuant to provisions of Section 161.053, Florida Statutes (F.S.), a permit is required for all excavation, construction, or other activities with the potential to cause beach erosion or damage coastal vegetation. On sandy shorelines where a CCCL line has not been established, a permit is required for construction activities within 50 feet of the mean high water line (see Section 161.052, F.S.).

Permits for walkovers contain standard conditions that require construction to be conducted in a manner that minimizes short-term disturbance to the dune system and existing vegetation. Replacing vegetation destroyed during construction with similar plants suitable for beach and dune stabilization is required. Only limited excavation for the placement of support posts is authorized, and construction of walkovers may not occur during the marine turtle-nesting season, which extends May 1 through October 31 (except for Brevard through Dade counties, which extends March 1 through October 31).

GENERAL SITING GUIDELINES

The walkover shall be designed and sited to protect dune features, to minimize disturbance of native vegetation, to not restrict lateral beach access and to minimize the amount of construction material that may become debris during a storm. Elevated walkovers are not required for all beach accesses, such as in sparsely vegetated, low profile dune areas where on-grade sand or shell paths are suitable for controlling foot traffic. Walkovers should generally be constructed perpendicular to the shoreline and extend at least to the seaward toe of the frontal dune or the existing line of vegetation but not farther than 10 feet seaward of the vegetation. The optimum siting of the walkover structure can be determined by contacting a CCCL field inspector.

GENERAL DESIGN GUIDELINES

Walkovers are designed to be minor, expendable structures that pose a minimal interference with coastal processes and generate minimal amounts of debris. Walkovers constructed across native beach and dune vegetation should be post-supported and elevated a sufficient distance above the existing or proposed vegetation to allow for sand build-up and clearance above the vegetation. Whenever possible, stairways and ramps leading from the dune bluff or crest down to the beach should be designed with posts that completely span the seaward slope of the dune. The structure should be designed to minimize the quantity of material used in construction, such as avoiding the use of vertical wood pickets, and reducing the length and width of construction on the beach.

Single family walkovers should not exceed 4 feet in overall width and the support posts shall not be greater than 4-inch wide posts. Multi-family walkovers shall not exceed 6 feet in overall width and the support posts shall not be greater than 6-inch wide posts. Round posts are preferred to square posts. Support posts shall not be

encased in concrete nor installed into dune slopes that are steeper than approximately 30 degrees. Support posts should have a minimum 5 feet of soil penetration. Applicants should consult with the Bureau prior to requesting a permit for a walkover that contains switchbacks, long ramps or other features required to comply with the Americans with Disabilities Act Accessibility Guidelines.

WALKOVER ELEVATION GUIDELINES

Site conditions affecting walkover heights vary as the structure traverses the beach/dune system. The ground cover changes from the uplands, commonly covered with woody scrub or coastal strand vegetation (saw palmetto/sea grape/scrub oaks),over a dune bluff or one or several dune crest(s), covered with either coastal strand or coastal grassland (sea oats/bitter panicum/marsh hay), down the slope to the dry sand beach, either uncovered bare escarpment or partially covered with beach/dune vegetation (railroad vine/sea rocket/sea oats). The type of structure and height from the dune bluff or crest down to the beach also must be considered in setting the walkover elevation. Increased elevation of the structure requires a longer run to the beach and additional construction material within this high energy area. This creates additional storm generated debris, sea turtle nesting habitat impacts, sand losses due to storm wave scour, and interferes with people's ability to walk along the beach.

Walkover Elevations in Uplands. The upland environment of coastal scrub/coastal strand habitat is characterized by more stable soil conditions with less blowing sands and infrequent storm overwash events. The stable conditions allow for the development of a mature woody vegetation and saw palmetto dominated plant community. In addition to thick above ground stem and leaf vegetation between 5 and 15 feet in height, this plant community has an extensive below ground woody root mat. Walkovers in these upland habitats need be elevated only a sufficient distance above the ground to avoid disturbance of the soil and root systems or cutting of low tree and palmetto trunks. An elevation of the stringers from 6" to 2'-0" above existing grade should be sufficient. Walkover elevations crossing coastal wetlands within upland areas may require increased elevations. Elevation of the walkover above the leaf canopy is in most cases impractical in coastal scrub or coastal strand habitats.

Walkover Elevations over Bluffs. The low stringer elevation recommended for uplands can be carried to an eroded bluff line. This will reduce the length of a ramp or walkover down to the beach. Again the objective the walkover elevation is to reduce damage to coastal scrub soils and root systems.

Walkover Elevations over Dune Crests. Dune environments are characterized by mobile sands subject to storm effects (which lower grade elevations) and wind effects (which can raise elevation as sand is trapped). Dunes are dominated by coastal grassland plants adapted to the dynamic environment. These include sea oats, bitter panicum, and little bluestem. Walkovers sited within active dune systems are required to be elevated sufficiently to allow for sand movement and growth of vegetation. Walkover designs published in "Beach/Dune Walkover Structures" referenced below specify a 3'-10" minimum clearance from existing grade to the bottom of the stringers of an up to 6-foot wide (overall dimension) multi-family or public beach access structures, and a 3'-0" minimum clearance to the top of the deck for an up to 4-foot wide single family structures.

Walkover Elevations on Seaward Dune or Bluff Slopes. The elevation of the walkover at the dune crest and the distance of the seaward terminus from the water's edge determine the height of the steps or ramps crossing the seaward slope. The design objective is to get the structure down to the beach in as short a shore-normal (perpendicular to the shoreline) distance as possible while reducing the shore-parallel coverage of the slope. Department guidelines require that the seaward terminus of the structure be no farther seaward than 10 feet from the line of permanent beach dune vegetation or the toe of the frontal dune. Reducing the seaward encroachment and shore-parallel width decreases the potential for storms interacting with the structure, occupation of sea turtle nesting habitat by the structure, and interference with lateral public beach access. Walkovers designed for the Americans with Disabilities Act often increase the length of walkover ramps on the beach. This requires the need for a site specific review for environmental impacts. The burial of the ramp or

step terminus a minimum amount (0.5 to 1.0 feet)-foot below grade may allow for use of the walkover after some lowering of the beach elevation from minor storms. However, placement of this terminus below the depth of a post storm beach profile is discouraged as this portion of the walkover will most likely have been damaged by larger storms and to have interfered with coastal processes.

On Grade Walkovers. Elevated walkovers are not necessary in all site conditions and use situations. Where dune development is minimal, beach dune vegetation sparse or use infrequent, on-grade footpaths may be preferred. The Department discourages solid concrete walks and footpath surfaces such as stepping stones that create debris or missiles. Other surfaces such as geotextile fabrics, cabled wood planks, or shell require a case by case review. No permanent path surfaces are allowed seaward of the dune or within sea turtle nesting habitat.

TYPICAL WALKOVER PROFILE

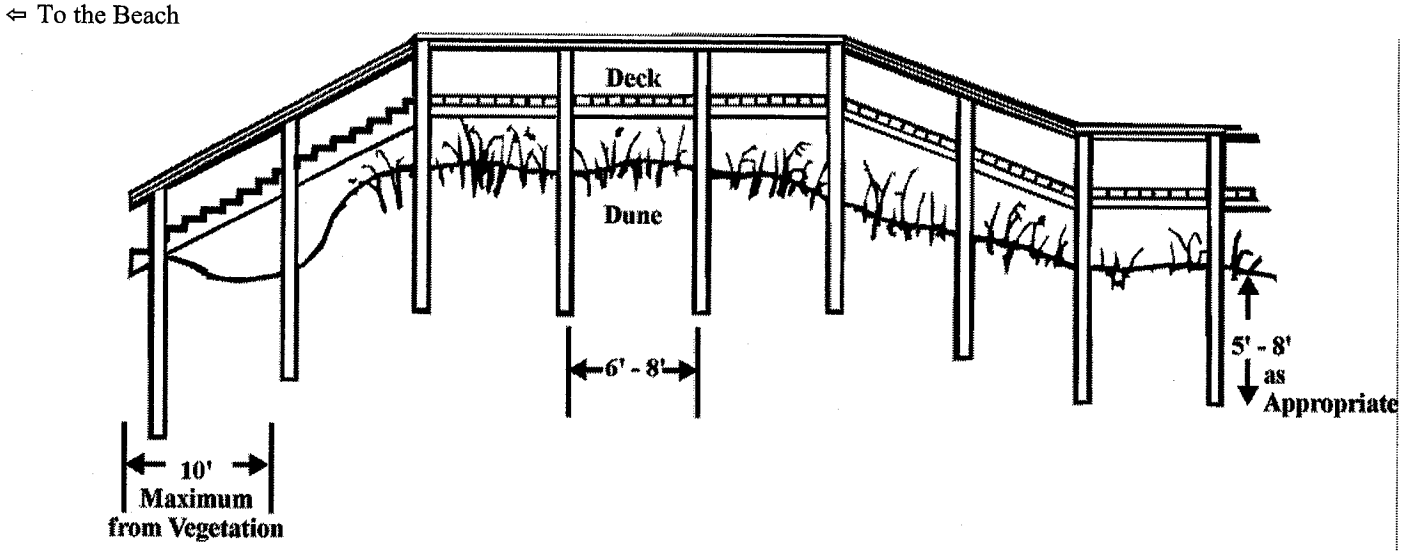

References

Beach/Dune Walkover Guidelines, the Florida Bureau of Beaches and Coastal Systems, Florida Department of Environmental Protection, Revised January 1998.

Beach/Dune Walkover Structures, SUSF-SG-76 by Todd L. Walton, Jr., and Thomas C. Skinner. Published by the Marine Advisory Program of the Florida Cooperative Extension Service and the Florida Sea Grant, March, 1983.

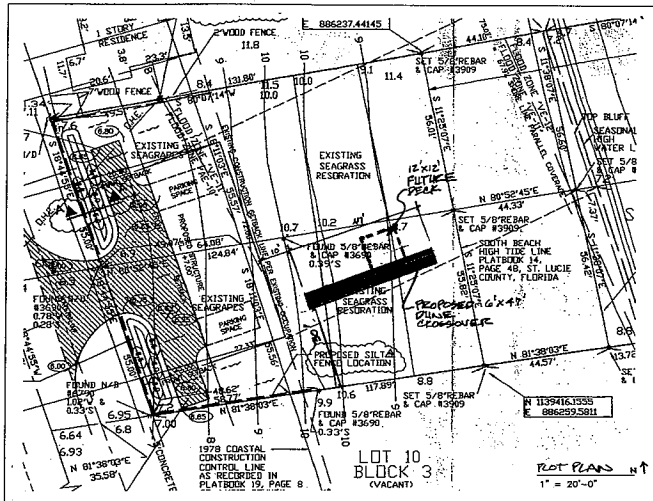

ROT PLAN

1" = 20'-0"

STRUCTURAL NOTES:

1. STRUCTURAL LUMBER TO BE PRESSURE TREATED SOUTHERN PINE #2 GRADE OR BETTER W/ MOISTURE CONTENT MIN. FIBER STRESS VALUES.
2. ALL COMPONENTS OF THIS STRUCTURE HAVE BEEN DESIGNED & SELECTED TO WITHSTAND WIND FORCES PER THE FLORIDA BUILDING CODE; ZONE SPECIFIC.
3. ALL FASTENERS, STRAPS, BOLTS, NAILS, SCREWS (ETC.) TO BE STAINLESS STEEL OR HOT DIPPED GALV.

Certification for Design Load Compliance

1. DESIGN CODE: Florida 2017 Residential code 2017 Edition w/20___ supplements using ASCE 7-10
2. Structure Design is: ___ Enclosed ___ Partially Enclosed X Open Building
3. Risk Category: ___I X II ___III ___IV Exposure Category: ___B ___C X D Adjustment coefficient 1.0
4. Design Wind Velocity 155 mph ___ASD ___LRFD Enf Zone Width 4' ft
5. Mean Roof Height 6' ft Roof Pitch: ___:12 Parapet ___ft
6. Components & Cladding Design Pressure used: (PSF, based on Actual sq. ft. @ 30' MRH (worst case)
   Zone 1: N/A Zone 2: N/A Zone 3: N/A Zone 4: 48.2 Zone 5: 59.2 Garage: N/A
7. Design Loads: Floor: 80 PSF Roof/Deck: ___ PSF Roof/Live ___ PSF Balcony 80 PSF
   Dock: ___PSF Deck: 80 PSF Stairs: ___PSF Fence: ___ PSF Railing: 50 plf
8. Were Shear Walls Considered for Structure? X Yes ___No ___Not Applicable Explain Why Not:
9. Is a Continuous Load Path provided? X Yes ___Not applicable Explain Why Not:

NOTE:

PDISE CROSSOVER IS DESIGNED IN ACCORDANCE W/ SECTION 9.2.2 OF ASCE 24-14

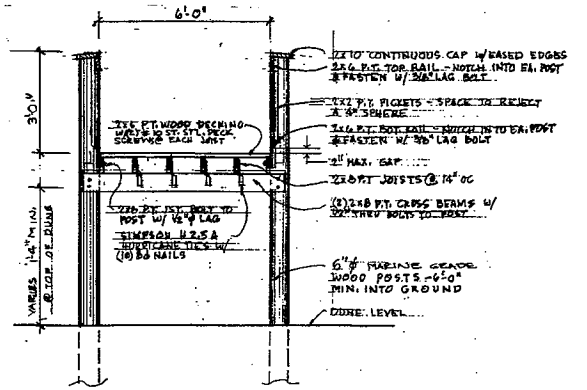

SECTION @ CROSS OVER

1/2"

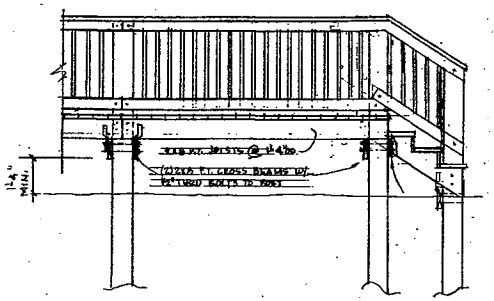

SECTION @ STAIR

1/2"

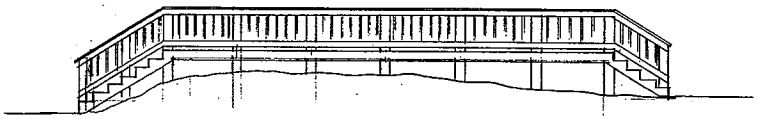

ELEVATION

1/4"

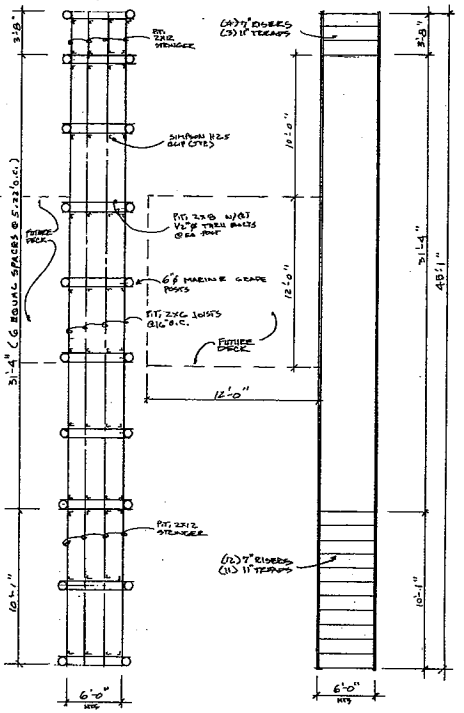

FRAMING PLAN

1/4"

FLOOR PLAN

1/4"

ARCHITECT

Architectonic Inc

800 DELAWARE AVENUE
FORT PIERCE, FLORIDA 34950
T: 772 460 7751
F: 772 460 4244

WWW.ARCHITECTONICINC.COM

STATE REG # AA26003348

COPYRIGHT 2017

PROJECT

TARR

ELEVATOR / STAIR RENOVATIONS

FT. PIERCE, FLORIDA

CLIENT

CONSULTANTS

REGISTRATION

MICHAEL J. SEAL, AIA AR95581

REVISIONS

NO.	DATE	REVISION
1	1/16/19	REVISED PER FUTURE DECK

KEY PLAN

SHEET TITLE / SHEET NUMBER

A-1 OF 1

PROJECT NUMBER 8.10.12.1.A

DATE 12/12/18

REVISED 1.7

Michelle Franklin, CFA -- Saint Lucie County Property Appraiser -- All rights reserved.

Property Identification

Site Address:	316 S OCEAN DR
Parcel ID:	2401-501-0022-000-5
Account #:	14615
Map ID:	24/01A
Use Type:	0800
Zoning:	R4A
City/County:	Fort Pierce

Ownership

Steven Tarr (TR)
4521 PGA BLVD # 201
Palm Beach Gardens, FL 33418

Legal Description

FT PIERCE BEACH S/D BLK 3 LOTS 8AND 9-LESS THAT PART LYG E OF LI IN PL BK 37-2- (OR 4022-2507: 4024-532; 4109-1878)



Current Values

Just/Market Value:	$623,200
Assessed Value:	$623,200
Exemptions:	$0
Taxable Value:	$623,200

Taxes for this parcel: SLC Tax Collector's Office
Download TRIM for this parcel: Download PDF

Total Areas

Finished/Under Air (SF):	1,944
Gross Area (SF):	4,608
Land Size (acres):	0.32
Land Size (SF):	13,860

Sale History

Date:	Mar 19, 2018
Book/Page:	4109 / 1878
Sale Code:	0111
Deed:	QC
Grantor:	316 OCEAN LLC
Price:	$0
Date:	Jul 19, 2017
Book/Page:	4024 / 0532
Sale Code:	0116
Deed:	WD
Grantor:	316 OCEAN LLC
Price:	$330,000
Date:	Jul 19, 2017
Book/Page:	4022 / 2507
Sale Code:	0116
Deed:	WD
Grantor:	Dallett Richard

Price:	$310,000
Date:	Mar 16, 2004
Book/Page:	1925 / 1601
Sale Code:	XX00
Deed:	WD
Grantor:	Boss Brian D
Price:	$975,000
Date:	Apr 5, 2001
Book/Page:	1382 / 1406
Sale Code:	XX00
Deed:	WD
Grantor:	Tillinger Robert
Price:	$165,000
Date:	Dec 21, 1999
Book/Page:	1271 / 2674
Sale Code:	XX04
Deed:	QC
Grantor:	Tillinger Robert
Price:	$100
Date:	Mar 12, 1998
Book/Page:	1132 / 2796
Sale Code:	XX01
Deed:	WD
Grantor:	George B Hardie
Price:	$38,000
Date:	Mar 12, 1998
Book/Page:	1132 / 2795
Sale Code:	XX01
Deed:	WD
Grantor:	George B Hardie
Price:	$38,000
Date:	Sep 1, 1974
Book/Page:	0231 / 2275
Sale Code:	XX00
Deed:	CV
Grantor:	
Price:	$40,000

Building Information (1 of 1)

Finished Area: 1,944 SF

Gross Total Area: 4,608 SF

Exterior Data

View:	Roof Cover: Dim Shingle	Roof Structure: Hip
Building Type: MFH	Year Built: 2003	Frame:
Grade: MFAQ	Effective Year: 2003	Primary Wall: CB Stucco
Story Height: 2 Story	No. Units: 2	Secondary Wall:

Interior Data

Bedrooms: 0	Electric: MAXIMUM	Primary Int Wall:
Full Baths: 2	Heat Type: FrcdHotAir	Avg Hgt/Floor: 0
Half Baths: 0	Heat Fuel: ELEC	Primary Floors: Carpet
A/C %: 100%	Heated %: 100%	Sprinkled %: N/A%



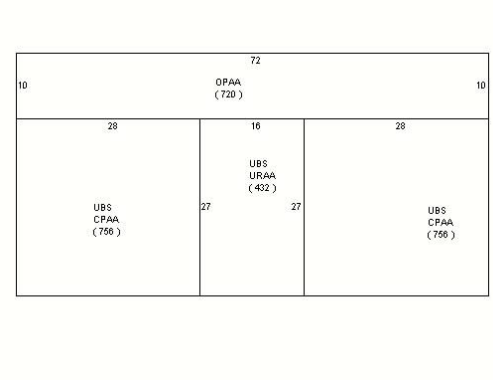

Special Features and Yard Items

Current Year Values

Current Values Breakdown

Building:	$208,200
Land:	$415,000
Just/Market:	$623,200
Ag Credit:	$0
Save Our Homes or 10% Cap:	$0
Assessed:	$623,200
Exemption(s):	$0
Taxable:	$623,200

Current Year Exemption Value Breakdown

Current Year Special Assessment Breakdown

Start Year	AssessCode	Units	Description	Amount
2004	0041	1.2	Fort Pierce Stormwater Charge	$64.80

This does not necessarily represent the total Special Assessements that could be charged against this property. The total amount charged for special assessments is reflected on the most current tax statement and information is available with the SLC Tax Collector's Office.

Historical Values

Permits

Number:	FD2002-2
Issue Date:	Oct 10, 2002
Description:	Unknown
Amount:	$0
Fee:	$150
Number:	RD2002-1
Issue Date:	Nov 6, 2002

Description:	New Residential Multi Family
Amount:	$0
Fee:	$3,272
Number:	IRR200341
Issue Date:	Dec 22, 2003
Description:	Yard Sprinkler System
Amount:	$1,950
Fee:	$100
Number:	BP09-1311
Issue Date:	Aug 7, 2009
Description:	Alterations/Remodeling
Amount:	$310
Fee:	$50
Number:	BP13-2585
Issue Date:	Aug 5, 2013
Description:	Air Conditioning Only
Amount:	$3,403
Fee:	$155
Number:	BP18-0953
Issue Date:	Jun 4, 2018
Description:	Enclosure
Amount:	$500
Fee:	$0
Number:	BP18-1271
Issue Date:	Jun 4, 2018
Description:	Enclosure
Amount:	$500
Fee:	$0
Number:	BP19-0146
Issue Date:	Jan 16, 2019
Description:	Roof
Amount:	$40,000
Fee:	$0

Notice: This does not necessarily represent all the permits for this property.
Click the following link to check for additional permit data in Fort Pierce

This information is believed to be correct at this time but it is subject to change and is not warranted.
© Copyright 2019 Saint Lucie County Property Appraiser. All rights reserved.

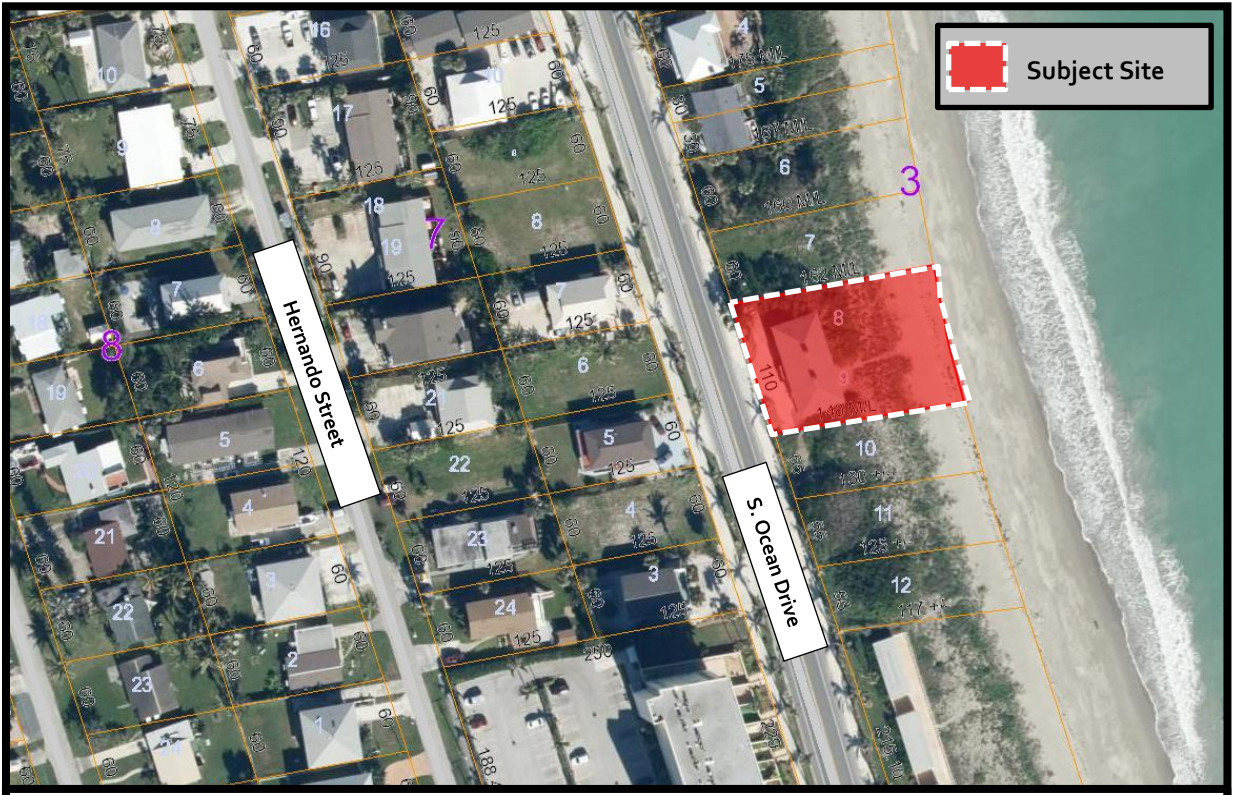

THE SUNRISE CITY
FORT PIERCE
Florida

Conditional Use
316 S. Ocean Drive
Aerial Map

N
W E
S

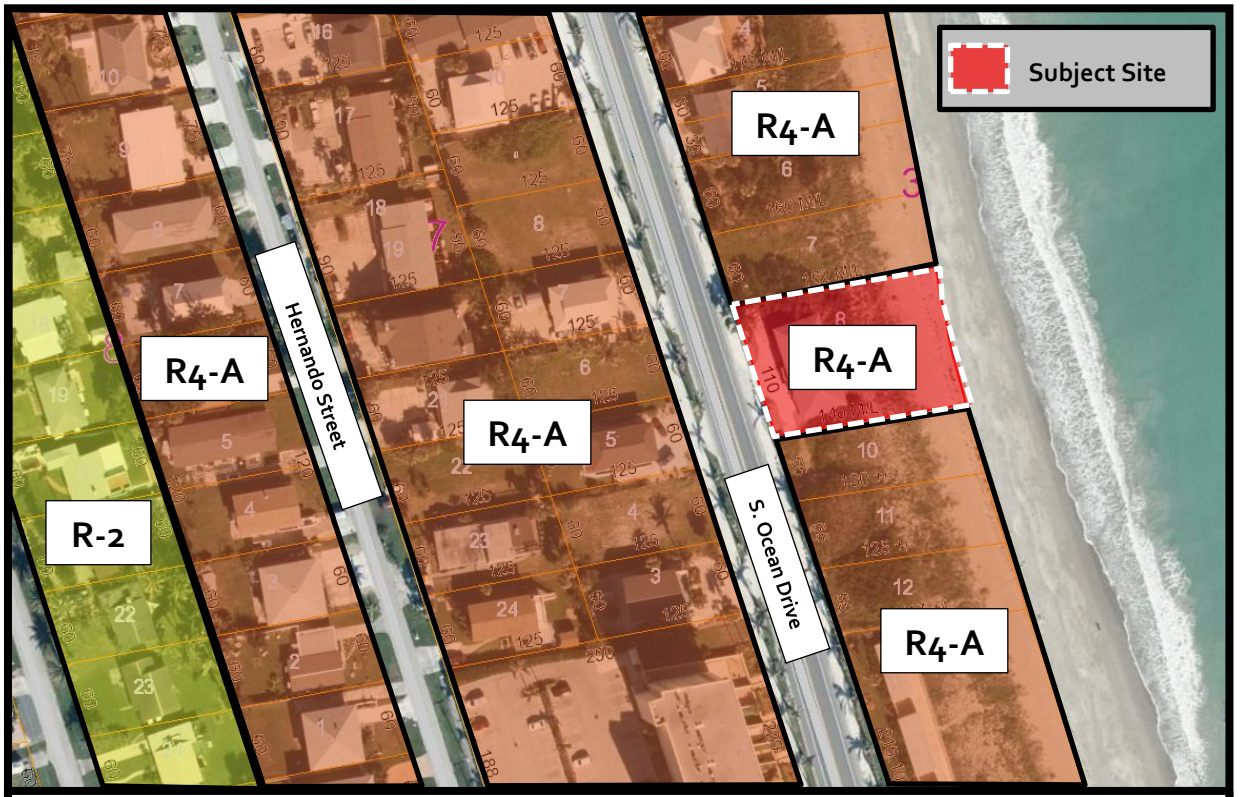

THE SUNRISE CITY
FORT PIERCE
Florida

Conditional Use
316 S. Ocean Drive
Zoning Map

N
W E
S

THE SUNRISE CITY
FORT PIERCE
PLANNING DEPARTMENT
Florida

TO: Steve Tarr, Applicant

FROM: Rebecca Grohall, AICP Planning Director

RE: **TECHNICAL REVIEW COMMITTEE REVIEW COMMENTS**

DATE: FEBRUARY 1, 2019

Conditional Use with New Construction – 316 S. Ocean Dr.

Attached are the comments received from the TRC. Please review the comments received for the proposed dune crossing and exterior staircase. Please note comments were not received from the Transportation Planning Organization (TPO), FP Public Works, or St. Lucie County Engineering, although comments were received from St. Lucie County.

FP Building – lighting, if any, should comply with regulations for the protection of sea turtles.

FP Planning – the 12 x 12 deck is not reflected on the DEP permit. Please ensure the permit is modified if you wish to proceed.

SLC Planning, in conjunction with SLC Erosion Control District:
1.) The Conditional Use Plan is updated to certify the proposed observation deck (12ft. by 12ft. – Future) will not be located the perpetual construction easement contained in Resolution No. 98-016, as recorded in OR Book 1154, Pages 1351-1360.
2.) The segment of the proposed dune cross-over extending into the perpetual construction easement, contained in Resolution No. 98-016, as recorded in OR Book 1154, Pages 1351-1360, is approved by the St. Lucie County Erosion District where applicable in accordance with the requirements of said easement *or* is eliminated, prior to issuance of a building permit by the City of Fort Pierce. The contact information for St. Lucie County Erosion District is:
Joshua Revord, P.E., Coastal Engineer St. Lucie County Erosion District - (772) 462-1269 / RevordJ@stlucieco.org.

Alternatively, the applicant may consider modification to the proposed conditional use plan to reflect adjustment to the observation deck location and note acknowledging appropriate approval or elimination of a portion of the structural crossover extending into this easement.

This project is scheduled for Feb. 12th Planning Board meeting at 6:00 PM and Tuesday, Feb. 19th City Commission meeting at 6:00 PM.

If you have questions, please feel free to email rgrohall@city-ftpierce.com or call 467-3729. Thank you!

Conditional Use with New Construction - 316 S. Ocean Dr.
Martha Kerr
to:
'arosenthal@city-ftpierce.com'
01/22/2019 12:04 PM
Hide Details
From: "Martha Kerr" <mkerr@fpua.com>
To: "'arosenthal@city-ftpierce.com'" <arosenthal@city-ftpierce.com>

Good morning,

Below are FPUA comments on the submission for Conditional Use with New Construction – 316 S Ocean Dr.

W/WW Engineering: Approved
Electric & Gas Engineering: Approved

Thank you

FPUA COMMUNITY PROUD

Martha Kerr
Staff Assistant
W/WW Engineering Department
Fort Pierce Utilities Authority
1701 S. 37th Street,
Fort Pierce, FL 34984
772.466.1600 Ext. 3473
772.468.2414 Fax

Please note: Florida has a very broad public records law. Most written communications to or from Fort Pierce Utilities Authority employees regarding government business are public records, available to the public and media upon request. Your e-mail communications may be subject to public disclosure.

(For additional information, go to http://www.fpua.com/important_information/privacy.php)

THE SUNRISE CITY
FORT PIERCE
Florida
ENGINEERING
DEPARTMENT

RECEIVED
JAN 18 2019
CITY OF FORT PIERCE
PLANNING & ZONING

TO : Rebecca Grohall, AICP, Planning Director

FROM : John R. Andrews, P.E., City Engineer

RE : 316 South Ocean Drive Conditional Use - Dune Crossover
TRC No. 18-01000003

DATE : January 18, 2019

This is to advise you that we have completed the review of the following documents as received by this office on January 17, 20189:

- [x] Conditional Use Application
- [ ] Test Reports & Related Documents
- [ ] Record Drawings
- [ ] Clearances from all applicable Local, State and Federal Agencies
- [ ] Construction Drawings
- [ ] Executed Construction Contract
- [ ] Permits from applicable Local, State & Federal Agencies

Based on our reviews and appropriate site final inspection, we

- [x] Recommend
- [ ] Do Not Recommend

- [x] Conditional Use
- [ ] Building Permit
- [ ] C/O

Developer, Owner, Engineer, Contractor and other members of the Development Team must be aware, the above recommendation is based only on the construction requirements of the engineering plans and other engineering documentation approved by this department. The Development Team shall be responsible for the compliance with other City department requirements and all approved documents, as well as Local, State and Federal regulations. The development requirements for this project may necessitate additional construction requirements that are not subject to this department's review for approval.

- [ ] See attached for engineering comments

JRA/TST/tst
Q:\ENGINEERING\Site Development Projects\Addresses\305 South Ocean Drive\CU Approval- 011819.docx

Fw: TRC Review Needed by Jan. 31, 2019
Peggy Arraiz to: Rebecca Grohall 01/24/2019 05:39 PM
Cc: Alicia Rosenthal

Code does not have any comments.

Margaret M. (Peggy) Arraiz | Code Compliance Manager | City of Fort Pierce
Community Response Divisions
Code Enforcement & Animal Control
Phone: 772.467.3148 • Fax: 772.468.0457 • 100 North U.S. 1 Fort Pierce, FL 34950

Website | Facebook | Survey

THE SUNRISE CITY FORT PIERCE Florida

----- Forwarded by Peggy Arraiz/cfp on 01/24/2019 05:38 PM -----

From:	Alicia Rosenthal/cfp
To:	jschramm@fppd.org, EngelD@stlucieco.org, ReedR@stlucieco.org, base@stlucieco.org, ChambersG@stlucieco.org, haysd@stlucieco.org, pendarvisl@stlucieco.org, mreals@fppwd.com, jcisneros@fpua.com, jcarnes@fpua.com, deklem@stlucieco.org, definie@stlucieco.org, buchwaldp@stlucieco.org, olsonl@stlucieco.org, djohnson@fppwd.com, marty.sanders@stlucieschools.org, WWW_FPUA@fpua.com, plaguerre@fpua.com, jmittler@fpua.com, dingy@stlucieco.org, mkerr@fpua.com, lammers@fpua.com, keymail@fpua.com, dknupp@slcfd.org, dhobley-burney@fppd.org, david.koerner@flhealth.gov, Peggy Arraiz/cfp@cfp, Tracy Telle/cfp@cfp, Paul Bertram/cfp@cfp, Julie Bye/cfp@cfp, Mike Reals/cfp@cfp, Linda Cox/cfp@cfp, Karen Murphy/cfp@CFP, Landryb@stlucieco.org, Paul Thomas/cfp@cfp, Keona.Gardner@tcpalm.com, Lhudson@city-ftpierce.com, Rsessions@city-ftpierce.com, Ralexander@city-ftpierce.com, Tperona@city-ftpierce.com, in2lawfl@aol.com, sarah772@bellsouth.net, Tomperona@gmail.com, Jeremiah Johnson/cfp@CFP, osteen@slccommercial.com, PLangel@slcfd.org, bentonk@stlucieco.org, santamariam@stlucieco.org, anjohnson@fpua.com, dspotts@fppd.org, knorris@fppd.org, rridle@fppd.org
Cc:	Rebecca Grohall/cfp@cfp
Date:	01/23/2019 01:08 PM
Subject:	TRC Review Needed by Jan. 31, 2019

Good afternoon Technical Review Committee,

Please review the attached TRC packet for 316 S. Ocean Drive and send comments by January 31, 2019.

Thank you.

Alicia

TRC Packet 316 S. Ocean Drive.pdf

Alicia Rosenthal | Executive Assistant | City of Fort Pierce
Planning Department
Phone: 772.467.3729 • Fax: 772.466-5808 • 100 North U.S. 1 Fort Pierce, FL 34950

Website | Facebook | Survey

THE SUNRISE CITY
FORT PIERCE
Florida

Tell us how we are doing! Customer Service is a Priority for the City of Fort Pierce. Please take a moment to complete our customer service survey by following this link:
http://cityoffortpierce.com/FormCenter/Planning-13/Planning-Department-Customer-Service-Fee-81

THE SUNRISE CITY
FORT PIERCE
Florida
POLICE DEPARTMENT
"In Honor We Serve"

Technical Review Committee meeting

January 31st, 2019

(Quick turnaround project to meet turtle season deadline)

Case # (no case # provided) Parcel ID # 2401-501-0022-000-5

(Steven Tarr residence) 316 S. Ocean Dr, Ft. Pierce FL 34950

Conditional use, no new construction

Comments:

No comments at this time

Officer Damian Spotts

Crime Prevention Practitioner

Fort Pierce Police Department.

Conditioanl Use 316 S. Ocean Drive TRC ReviewSANDERS, MARVIN E. to: Alicia Rosenthal 01/23/2019 01:55 PM
Cc: "Rebecca Grohall"
From: "SANDERS, MARVIN E." <marvin.sanders@stlucieschools.org>
To: "Alicia Rosenthal" <arosenthal@City-FtPierce.Com>
Cc: "Rebecca Grohall" <rgrohall@city-ftpierce.com>

The St. Lucie County School District has reviewed the above reference project and have we do not have any comments or concerns.
Please feel free to contact me if you have any questions.

Marty E. Sanders, P.E.
Growth Management, Land Acquisition & Inter-Governmental Relations
School Board of St. Lucie County
Temporary office
582 NW University Blvd., Ste 500
Port St. Lucie, FL 34986

cell 772.216.5755

From: Alicia Rosenthal <arosenthal@City-FtPierce.Com>
Sent: Wednesday, January 23, 2019 1:08 PM
To: jschramm@fppd.org; EngelD@stlucieco.org; ReedR@stlucieco.org; base@stlucieco.org; ChambersG@stlucieco.org; haysd@stlucieco.org; pendarvisl@stlucieco.org; mreals@fppwd.com; jcisneros@fpua.com; jcarnes@fpua.com; deklem@stlucieco.org; definie@stlucieco.org; buchwaldp@stlucieco.org; olsonl@stlucieco.org; djohnson@fppwd.com; SANDERS, MARVIN E.; WWW_FPUA@fpua.com; plaguerre@fpua.com; jmittler@fpua.com; dingy@stlucieco.org; mkerr@fpua.com; lammers@fpua.com; keymail@fpua.com; dknupp@slcfd.org; dhobley-burney@fppd.org; david.koerner@flhealth.gov; Peggy Arraiz; Tracy Telle; Paul Bertram; Julie Bye; Mike Reals; lcox@city-ftpierce.com; Karen Murphy; Landryb@stlucieco.org; Paul Thomas; Keona.Gardner@tcpalm.com; Lhudson@city-ftpierce.com; Rsessions@city-ftpierce.com; Ralexander@city-ftpierce.com; Tperona@city-ftpierce.com; in2lawfl@aol.com; sarah772@bellsouth.net; tomperona@gmail.com; Jeremiah Johnson; osteen@slccommercial.com; PLangel@slcfd.org; bentonk@stlucieco.org; santamariam@stlucieco.org; anjohnson@fpua.com; dspotts@fppd.org; knorris@fppd.org; rridle@fppd.org
Cc: Rebecca Grohall
Subject: TRC Review Needed by Jan. 31, 2019

Good afternoon Technical Review Committee,

Please review the attached TRC packet for 316 S. Ocean Drive and send comments by January 31, 2019.

Thank you.

Alicia

Alicia Rosenthal| Executive Assistant | City of Fort Pierce

Planning Department
Phone: 772.467.3729 Fax: 772.466-5808 100 North U.S. 1 Fort Pierce, FL 34950

Website| Facebook| Survey

THE SUNRISE CITY
FORT PIERCE
Florida

Tell us how we are doing! Customer Service is a Priority for the City of Fort Pierce. Please take a moment to complete our customer service survey by following this link: http://cityoffortpierce.com/FormCenter/Planning-13/Planning-Department-Customer-Service-Fee-81

Please Note: Florida has very broad public records laws. Under Florida law, e-mail addresses are public records. If you do not want your e-mail address released in response to a public-records request, do not send electronic mail to this entity. Your e-mail communications will be subject to public disclosure unless an exemption applies to the communication. If you received this email in error, please immediately notify the sender by reply e-mail and delete the e-mail and any associated materials from all devices.

ST. LUCIE COUNTY FIRE DISTRICT
FIRE PREVENTION BUREAU
Office of the Fire Marshal

Telephone: (772) 621-3322
Fax: (772) 621-3604

BUREAU OF FIRE PREVENTION

SITE PLAN REVIEW

TO: Site Plan Applicant

SITE PLAN: 316 S. Ocean Dr. (Staircase)

REVIEW DATE: January 28, 2019

PLANNER: ALICIA ROSENTHAL

REVIEWED BY: Captain Paul Langel

Site Plan Approved: ____X____

Site Plan Approved with conditions: _____

Site Plan Approval withheld pending written acknowledgement of conditions: _____

Site Plan Rejected: _____

The Following Revisions Are Necessary:

1. ~~**Please submit a completed application for Development/Site Plan Review (St. Lucie County Fire District Development & Site Plan Review Application). This form is available on-line athttp://www.slcfd.com/permits.htm**~~
2. ~~**Fire District review fees are due at the time of submittal. An abbreviated fee schedule is included on the application form.**~~
3. ~~**Please provide an electronic copy of the Site Plan (pdf format)**~~
4. ~~**A separate review and permit is required for Underground Fire Mains connected to standpipes or sprinkler systems.**~~

ST. LUCIE COUNTY FLORIDA

PUBLIC WORKS
ENGINEERING DIVISION
DEVELOPMENT REVIEW
COMMITTEE

January 28th, 2019

Project:	**316 South Ocean Drive Conditional use with new construction**
Subject:	**SURVEY REVIEW**
To:	Rebecca Grohall
From:	Rod Reed, PLS SLC-Engineering Division

All comments are based on the Standards of Practice per 5J-17.050 thru 5J-17.052

SURVEY:

1) I have no comments.

Rod Reed, County Surveyor
St. Lucie County, Fl.
2300 Virginia Avenue
Ft. Pierce, Fl. 34982-5652
www.stlucieco.org
Ph. (772) 462-1721
E-mail reedr@stlucieco.org

ST. LUCIE COUNTY
PLANNING & DEVELOPMENT SERVICES
TECHNICAL REVIEW LETTER

TO: Rebecca Grohall, AICP, Planning Director

FROM: Kori Benton, Senior Planner

DATE: January 31, 2019

SUBJECT: **Conditional Use with New Construction - 316 S. Ocean Dr.**
Technical Review Project: # (None Provided)

The St. Lucie County Planning & Development Services Department has completed a review of the January 23, 2019 distribution of Technical Review Project# (None Provided), as described below.

Background

Application for Conditional Use for construction seaward of the Coastal Construction Control Line (CCCL). The new construction is primarily for an exterior stair case on the north elevation, with a 6ft. by 47ft. foot dune crossover structure, and a proposed 12ft. by 12ft. observation deck adjacent to the dunes.

Review of the subject project was coordinated with the St. Lucie County Erosion Control District and Environmental Resources Department staff.

FDEP Project Description

As proposed and in location(s) specified permittee may construct *stairway along north side of dwelling* from upper floor to ground level. In addition, permittee is also authorized to *construct multi-family dune walkover in area generally void of native dune vegetation.*

Review Comments

- **Stair case on the north elevation**
    - No Comments or Objection
- **6ft. by 47ft. foot dune crossover**
    - St. Lucie County's Erosion District holds an irrevocable perpetual and assignable easement and right-of-way in, on, over and across a portion of the subject parcel, as display in the exhibit below and further described in Schedule "A" within the attached resolution recorded in Public Records. This easement is for the purpose of activities, structures, etc. intended for renourishment and maintenance of the Fort Pierce, Florida, Shore Protection Project and other beach and shorelines renourishment, maintenance and management projects (easement attached.
    - The proposed structure's eastern edge extends into this perpetual construction easement. The easement's language establishes the Grantor's right to construct "dune overwalk structures" within this area, as approved by the Grantee (St. Lucie County's Erosion District), but provides that such structures are "subordinate to the construction, operation, maintenance, repair,

rehabilitation and replacement of the project (Fort Pierce Beach Shore Protection Project). The applicant is encouraged to transition the proposed dune crossover structure to a non-structure , at-grade, walk within the easement area in order to avoid future impacts to improvements within this easement.

Sketch of Easement Area:

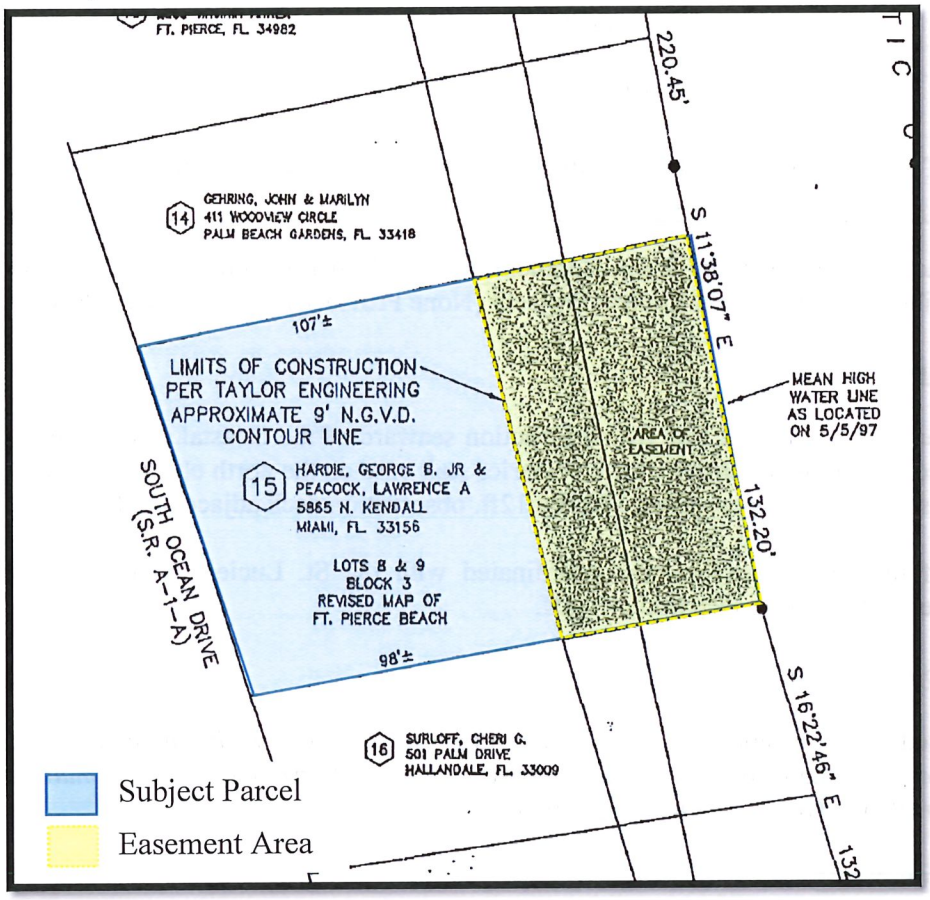

- **12ft. by 12ft. observation deck adjacent to the dunes.**
    - The observation deck is not identified in the FDEP Field Permit; the addition of the structure may require a different FDEP permit, and possibly further review by St. Lucie County Environmental Resources Department & Erosion Control upon determination of location, impacts to dune vegetation and mitigation if/where applicable. A site visit based upon final plans/location may be requested in coordination with FDEP to evaluate impacts to vegetation. The applicant should avoid proposal of this structure within the easement.

In accordance with the established easement, the Grantor (owner) shall obtain prior approval of the plans and specifications for such structures from the Grantee (St. Lucie County – Erosion Control District).

Please contact me at 772-462-2518 if you have any questions or would like to discuss the presented comments.

Attachment
Resolution 98-016: A resolution accepting a perpetual easement on behalf of St. Lucie County Erosion District: Perpetual Easement - Parcel ID #2401-501-0022-0005.

Excerpt of Page 5

of the easement; reserving, however, to the **GRANTOR(s)**, (his)(her)(its)(their)(heirs), successors and assigns, the right to construct dune overwalk structures in accordance with any applicable Federal, State or Local laws or regulations provided that such structures shall not violate the integrity of the dune in shape, dimension or function, and that prior approval of the plans and specifications for such structures shall have been obtained from the **GRANTEE**; and provided further that such structures are subordinate to the construction, operations, maintenance, repair,

JoAnne Holman, Clerk of the Circuit Court - St. Lucie County
File Number:1643231 OR (1154 PAGE 1351
Recorded: 06-24-98 08:04 A.M.

Petit Co. Fac 7/10/98 BY

RESOLUTION NO. 98-016

A RESOLUTION ACCEPTING A PERPETUAL EASEMENT ON BEHALF OF ST. LUCIE COUNTY EROSION DISTRICT

BE IT RESOLVED by the St. Lucie County Erosion District, a Special Taxing District of the State of Florida, that:

The foregoing Perpetual Easement is duly accepted on behalf of St. Lucie County Erosion District this 9th day of June, 1998.

ST. LUCIE COUNTY EROSION DISTRICT
a Special Taxing District

BY: _____
CHAIRMAN

ATTEST:

_____
CLERK

APPROVED AS TO FORM AND CORRECTNESS:

_____
COUNTY ATTORNEY

Please return to: County Attorney

This Document Prepared By
Belinda H. Vose
under the Direction of
Daniel S. McIntyre, St. Lucie County Attorney
St. Lucie County
2300 Virginia Avenue
Ft. Pierce, FL 34982
Project Name: Fort Pierce, Florida, Shore Protection Project
Parcel No.: 15/Hardie & Peacock nka Tillinger
Part of Tax ID# 2401-501-0022-000/5

PERPETUAL EASEMENT

THIS EASEMENT is made this 11th day of MAY 1998, by and between **ROBERT TILLINGER, A MARRIED ADULT AND WENDALL TILLINGER, A MARRIED ADULT, AS TENANTS IN COMMON** whose mailing address is 905 MOSLEY ROAD, LAKE ALFRED, FL 33850 hereinafter "**GRANTOR**", and **ST. LUCIE COUNTY EROSION DISTRICT, a Special Taxing District of the State of Florida**, whose address is 2300 Virginia Avenue, Ft. Pierce, FL 34982 hereinafter "**GRANTEE**".

R E C I T A L S:

WHEREAS, **GRANTOR** owns beach front property in Ft. Pierce, St. Lucie County, Florida; and

WHEREAS, the property described in Schedule "A" is not the homestead of the **GRANTOR**, who resides at 22707 SW 179 PL, MIAMI, FL 33170 (Robert Tillinger) and 905 MOSLEY RD, LK ALFRED, FL 33850 (Wendall Tillinger); and

WHEREAS, the property line for **GRANTOR'S** property extends seaward to either the Erosion Control Line ("ECL") or the Mean High Water Line ("MHWL"); and

WHEREAS, the **GRANTEE** desires to assist in the implementation of a beach renourishment project landward of the ECL or MHWL onto a portion of the **GRANTOR'S** property as more particularly described on Schedule "A", said project more particularly described hereafter as the Fort Pierce, Florida, Shore Protection Project (hereinafter referred to as the "Project"), and other beach and shorelines renourishment maintenance and management projects which may be undertaken in the future by other local, state and federal agencies and **GRANTOR** will benefit directly therefrom; and

WHEREAS, some of the sand so deposited may be at points landward of both the ECL and MHWL and thus on the **GRANTOR'S** lands; and

WHEREAS, said Project may involve persons and equipment crossing over (landward of) the MHWL and ECL and on the **GRANTOR'S** property in order to place the sand according to the Project plans; and

WHEREAS, the **GRANTOR** acknowledges and agrees that the **GRANTEE** may grant and convey any and all rights vested in the **GRANTEE** hereunder to such other entities as it deems necessary in order to fully carry out the intent of the Project; and

WHEREAS, **GRANTOR** recognizes that its remaining land shall benefit from this Beach Renourishment Project; and

WHEREAS, **GRANTOR** hereby waives any and all rights to compensation which may be due **GRANTOR** by reason of the transactions contemplated herein in consideration of the benefits to be derived from the Project.

NOW THEREFORE, in consideration of the mutual benefits, covenants and conditions contained herein:

1. The parties acknowledge that the above recitals are true and correct and hereby incorporate same as part of this Agreement.
2. **GRANTOR** does hereby grant, establish and convey unto the **GRANTEE**, its agents, successors and assigns, an irrevocable perpetual and assignable easement and right-of-way in, on, over and across the land described in Schedule "A" for use by the **GRANTEE**, its representatives, agents, contractors, and assigns, to construct, preserve, patrol, repair, nourish,

rehabilitate, replace, operate, and maintain a public beach, a dune system and other erosion control and storm damage reduction measures together with appurtenances thereto, including the right to deposit sand; to accomplish any alterations of contours on said land; to construct berms and dunes to nourish and restore periodically; to move, store and remove equipment and supplies; to erect and remove temporary structures, and to perform any other work necessary and incident to the construction, periodic renourishment and maintenance of the Fort Pierce, Florida, Shore Protection Project and other beach and shorelines renourishment, maintenance and management projects which may be undertaken in the future by other local, state and federal agencies and the **GRANTEE**, together with the right of public use and access; to plant vegetation on said dunes and berms; to erect, maintain and remove silt screens and snow fences; to facilitate preservations of dunes and vegetation through the limitation of access to dune areas; to trim, cut, fell, and remove from said land all trees, underbrush, debris, obstructions, and any other vegetation, structures and obstacles within the limits of the easement; reserving, however, to the **GRANTOR(s)**, (his)(her)(its)(their)(heirs), successors and assigns, the right to construct dune overwalk

structures in accordance with any applicable Federal, State or Local laws or regulations provided that such structures shall not violate the integrity of the dune in shape, dimension or function, and that prior approval of the plans and specifications for such structures shall have been obtained from the **GRANTEE**; and provided further that such structures are subordinate to the construction, operations, maintenance, repair, rehabilitation and replacement of the project; and further reserving to the **GRANTOR**(s), (his)(her)(its)(their)(hers), successors and assigns all such rights and privileges as may be used and enjoyed without interfering with or abridging the rights and easements hereby acquired, subject however to existing easements for public roads and highways, public utilities, railroads and pipelines.

3. This easement shall run with the land and shall be binding upon the **GRANTOR** and (his) (her) (its) (their) (heirs), successors and/or assigns.

IN WITNESS WHEREOF, this instrument is executed this 11th day of MAY, 1998.

TWO SEPARATE WITNESSES:

1st Witness Signature

Matthew Tillinger
Printed Name of 1st Witness

2nd Witness Signature

WILLIAM ROBERTSON
Printed Name of 2nd Witness

ROBERT TILLINGER, GRANTOR

1st Witness Signature

Matthew Tillinger
Printed Name of 1st Witness

2nd Witness Signature

WILLIAM ROBERTSON
Printed Name of 2nd Witness

WENDELL TILLINGER, GRANTOR

STATE OF FLORIDA)
COUNTY OF POLK)

I HEREBY CERTIFY, that on this day, before me, an officer duly authorized to take acknowledgments, personally appeared WENDELL TILLINGER AND ROBERT TILLINGER, to me known to be the person(s) described in and who executed the foregoing instrument (described type and date of attached instrument) PERPETUAL EASEMENT, MAY 11, 1998 that BOTH acknowledged before me that THEY executed the same. I relied upon the following form(s) of identification of the above named person(s) PERSONALLY KNOWN AND an oath (was / was not) taken.

WITNESS my hand and official seal in the County and State last aforesaid this 11th day of MAY, 1998.

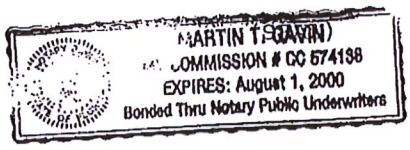

Notary Public

MARTIN T. GAVIN

Printed Name of Notary Public

My Commission Expires: 8/1/00

DESCRIPTION OF EASEMENT
PARCEL 15

ALL THAT PORTION OF THE FOLLOWING DESCRIBED PARCEL LYING EASTERLY (SEAWARD) OF CONTOUR ELEVATION 9.0 FEET NATIONAL GEODETIC VERTICAL DATUM (1929).

LOTS 8 AND 9, BLOCK 3, REVISED MAP OF FT. PIERCE BEACH SUBDIVISION, AS PER PLAT THEREOF RECORDED IN PLAT BOOK 8, PAGE 29, OF THE PUBLIC RECORDS OF ST. LUCIE COUNTY, FLORIDA, LESS AND EXCEPT THE LAND LYING EASTERLY OF A LINE AS SHOWN ON THE SKETCH OF SURVEY RECORDED IN PLAT BOOK 14, AT PAGE 48 OF THE PUBLIC RECORDS OF ST. LUCIE COUNTY, FLORIDA.

OR BOOK 1154 PAGE 1359

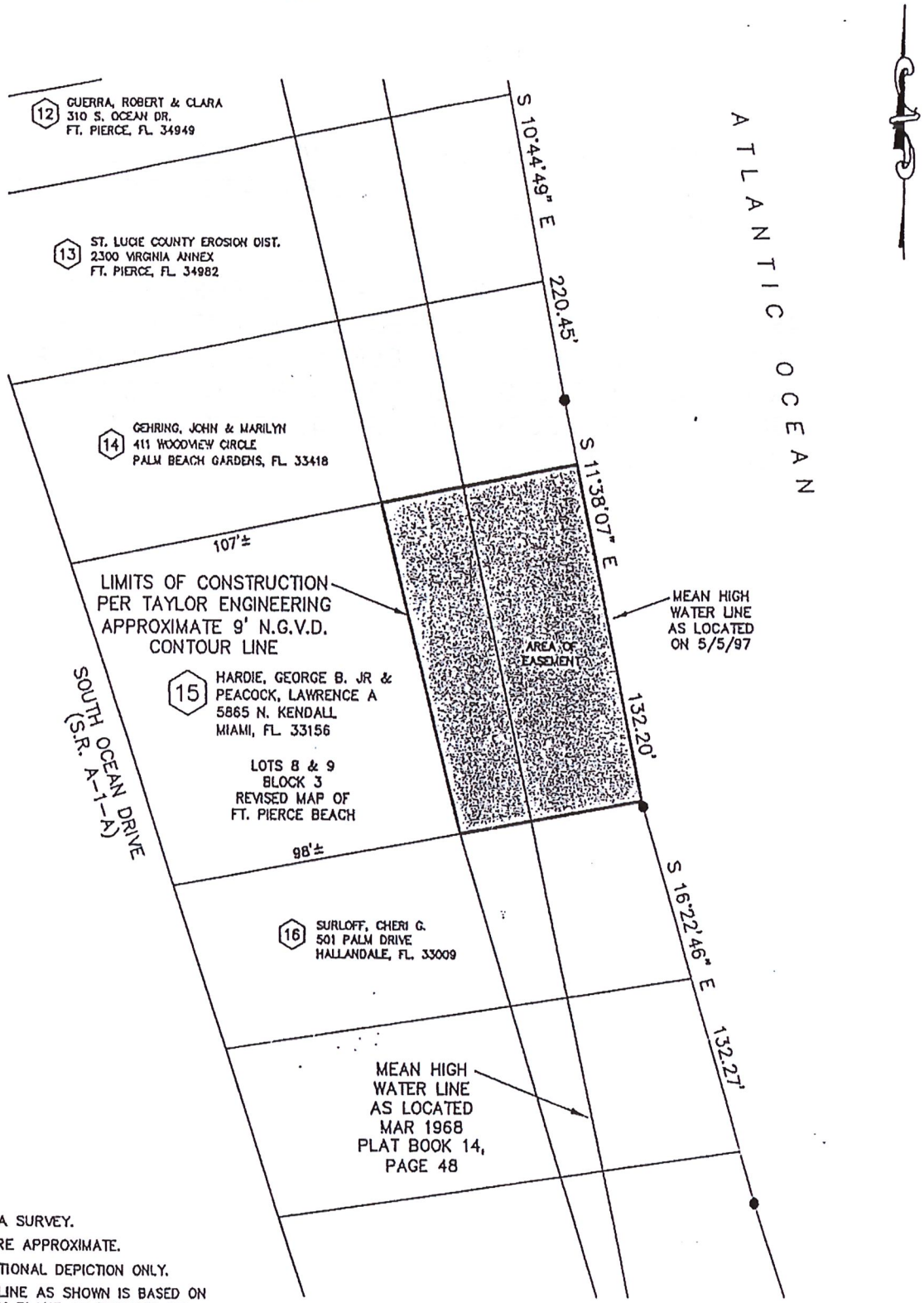

NOTES:
THIS IS NOT A SURVEY.
DISTANCES ARE APPROXIMATE.
FOR INFORMATIONAL DEPICTION ONLY.
9' CONTOUR LINE AS SHOWN IS BASED ON CONSTRUCTION PLANS AS PROVIDED BY TAYLOR ENGINEERING, INC.
BEARINGS REFER TO FLORIDA STATE PLANE COORDINATE SYSTEM, EAST ZONE, NAD '27.

ST. LUCIE COUNTY
BEACH NOURISHMENT PROJECT

MORGAN & EKLUND, INC.
PROFESSIONAL SURVEY CONSULTANTS
6745 US HIGHWAY #1
WABASSO, FL 32970
PHONE: (407) 388-5364
FAX: (407) 388-3165
1500 S.E. 3RD COURT
SUITE 203
DEERFIELD BEACH, FL 33441
PHONE: (305) 421-6882
FAX: (305) 421-0451

SKETCH OF PROPOSED CONSTRUCTION EASEMENT

DRAWN BY CHP	CHECKED BY JRH	FIELD BOOK NA / PAGE NO NA	DATE OF SURVEY NA	DOMINION NO. 5236.01 / SCALE 1"=50' / DATE 10/8/97 / SHEET 1 of 2

EXHIBIT "A"
Page 2 of 2

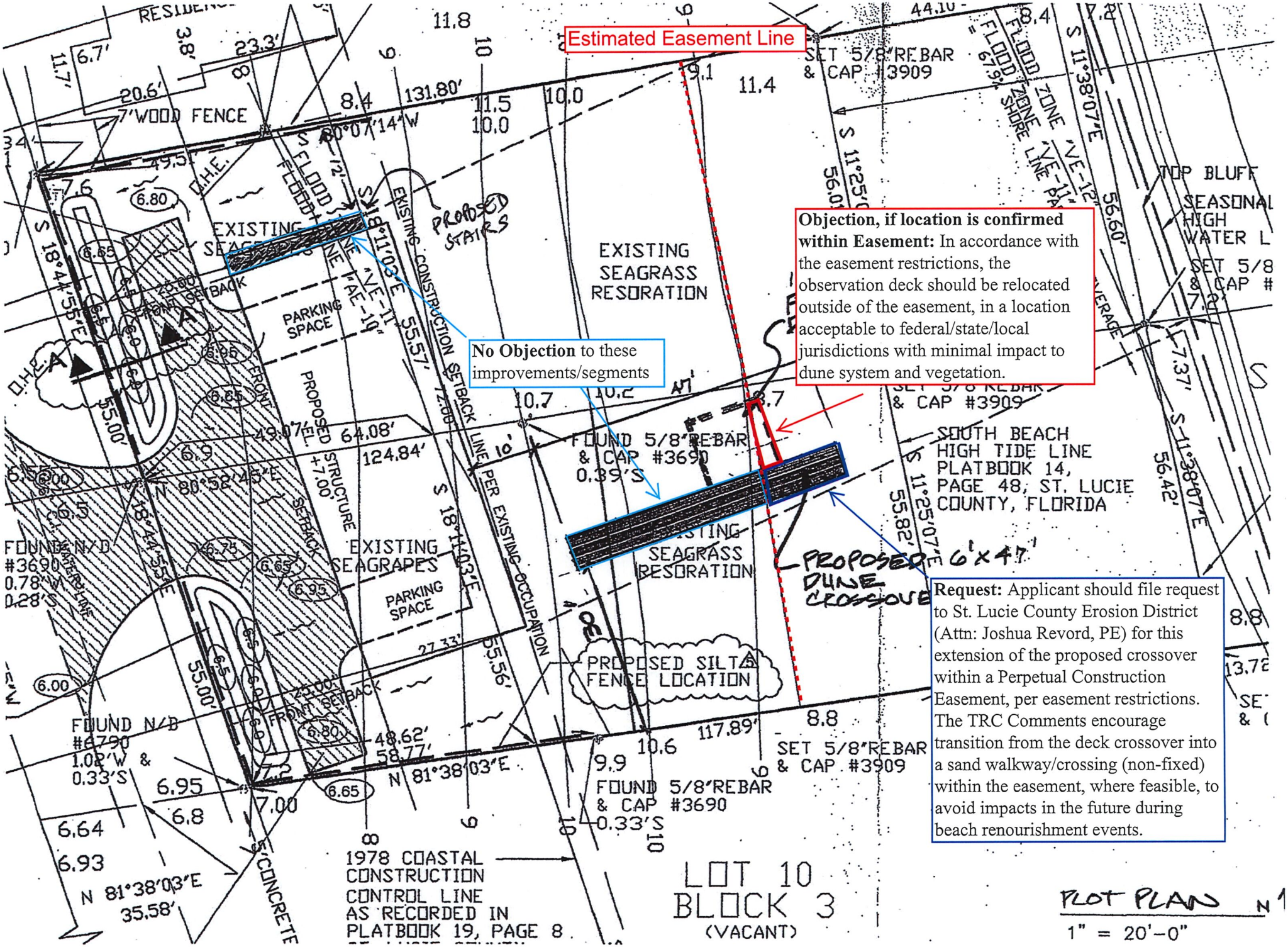
Estimated Easement Line
Objection, if location is confirmed within Easement: In accordance with the easement restrictions, the observation deck should be relocated outside of the easement, in a location acceptable to federal/state/local jurisdictions with minimal impact to dune system and vegetation.
No Objection to these improvements/segments
Request: Applicant should file request to St. Lucie County Erosion District (Attn: Joshua Revord, PE) for this extension of the proposed crossover within a Perpetual Construction Easement, per easement restrictions. The TRC Comments encourage transition from the deck crossover into a sand walkway/crossing (non-fixed) within the easement, where feasible, to avoid impacts in the future during beach renourishment events.
EXISTING SEAGRASS RESORATION
PROPOSED DUNE CROSSOVER 6'x47'
PROPOSED SILT FENCE LOCATION
EXISTING SEAGRAPES
PROPOSED STAIRS
PROPOSED STRUCTURE +7.00
PARKING SPACE
FOUND 5/8"REBAR & CAP #3690 0.39'S
FOUND N/D #3690 0.78'W 0.28'S
FOUND N/D #6790 1.02'W & 0.33'S
SET 5/8"REBAR & CAP #3909
FOUND 5/8"REBAR & CAP #3690 0.33'S
SOUTH BEACH HIGH TIDE LINE PLATBOOK 14, PAGE 48, ST. LUCIE COUNTY, FLORIDA
1978 COASTAL CONSTRUCTION CONTROL LINE AS RECORDED IN PLATBOOK 19, PAGE 8
LOT 10 BLOCK 3 (VACANT)
7'WOOD FENCE
EXISTING CONSTRUCTION SETBACK LINE PER EXISTING OCCUPATION
FLOOD ZONE 'VE-12'
FLOOD ZONE 'VE-11'
TOP BLUFF SEASONAL HIGH WATER L
PLOT PLAN
1" = 20'-0"

THE SUNRISE CITY
FORT PIERCE
BUILDING DEPARTMENT
Florida

MEMORANDUM

TO: **Rebecca Grohall, Planning Director**

FROM: **Paul Thomas, CBO, CFM, Building Official**

RE: **316 S. Ocean Dr. – Conditional Use with New Construction -Tarr Residence**

DATE: **January 30, 2019**

If lighting is installed, the lighting shall comply with Article XIV "Protection of Sea Turtles," Section 5-375.

PT/km

THE SUNRISE CITY
FORT PIERCE
BUILDING DEPARTMENT
Florida

MEMORANDUM

TO: **Rebecca Grohall, Planning Director**

FROM: **Paul Thomas, CBO, CFM, Building Official**

RE: **316 S. Ocean Dr. – Conditional Use with New Construction -Tarr Residence**

DATE: **January 30, 2019**

If lighting is installed, the lighting shall comply with Article XIV "Protection of Sea Turtles," Section 5-375.

PT/km

THE SUNRISE CITY
FORT PIERCE
PLANNING DEPARTMENT Florida

PUBLIC NOTIFICATION CERTIFICATION

PROJECT NAME: Conditional Use - Stairs & Dune Crossover - 316 S. Ocean Drive

NOTICES PROVIDED PURSUANT TO: City Code Section 22-143. Public Hearings A,B,C, & D

NOTICE BY NEWSPAPER: February 4, 2019

NOTICE BY MAIL: February 5, 2019

NOTICE BY SIGNS: Planning Board - February 6th, 2019; City Commission - February 6th, 2019

VERIFIED BY: Vennis Gilmore **TITLE:** Planning Analyst

SIGNATURE: Rebecca Grobell **DATE:** February 6, 2019

THE SUNRISE CITY
FORT PIERCE
PLANNING DEPARTMENT Florida

AFFIDAVIT OF NOTIFICATION AND MAILING

I, the undersigned, do hereby declare that I did mail copies of a notice of public hearings to each owner of the property located, or having any part thereof, situated within five hundred (500) feet of any point of the property for which the request has been made and to the owner of the property for which the request has been made, as required by Chapter 22, Article X, Section 22-143 of the Code of Ordinances.

Project: **Conditional Use – Stairs & Dune Crossover – 316 S. Ocean Drive**

Staff Name: **Vennis Gilmore**

Staff Signature: _____

Date Mailed: **February 5, 2019**

Number of Mailed Letters: **72**

Attachments:
Copy of notice of public hearings
Mailing list
Map of properties notified

City Commission Regular Meeting **12.b.**

Meeting Date: 02/19/2019

Re: Conditional Use - Little Scholars Academy/Child Day Care Facility - 810 S 6th Street

---

SUBJECT:

Quasi-Judicial Hearing - Review and approval of an application for Conditional Use with no new construction submitted by property owner, Hoyt C Murphy Inc., Benson Family Partnership, and applicant Rodolfo Diaz, to establish Child Day Care Facility at 810 S 6th Street, Fort Pierce, FL. The property is zoned General Commercial (C-3), Parcel ID: 2415-601-0456-000-6.

SUMMARY:

The applicant is asking for approval of a Conditional Use in order to accommodate the proposed Little Scholars Academy, a day care facility for children ranging from 12 months to 5 years old.

RECOMMENDATION:

The requested Conditional Use with No New Construction is consistent with City Code, the Comprehensive Plan, and does not adversely affect the public health, safety, convenience and general welfare; Staff recommends approval of the Conditional Use the following conditions to be met prior to the Building Department Permit issuance:

1. Comply with City Code Section 22-60. *Off-street parking and loading* (j) *Lighting (1)a.* Please provide the lighting plan with a minimum average of two (2) footcandles.

The Planning Board recommended approval with the second condition:

2. Install at least two (2) additional speed bumps on the property and add additional safety signage.

ALTERNATIVES:

Approval without conditions
Approval with alternative conditions
Denial

RESPONSIBLE STAFF:

Maria Lewicka, AICP
Historic Preservation Planner

COORDINATED WITH:

Rebecca Grohall, AICP
Planning Director

Fiscal Impact

OTHER INFORMATION:

No fiscal impact.

Attachments

Staff Report
Application
Narrative
Location Map
Zoning Map
Site PLan
Floor Plan
TRC Comments
Property Card
Public Notification Certification

Form Review

Inbox	Reviewed By	Date
City Manager	Maria Lewicka	02/12/2019 04:56 PM
City Manager	Nick Mimms	02/14/2019 08:42 AM

Form Started By: Maria Lewicka Started On: 02/07/2019 12:47 PM
Final Approval Date: 02/14/2019

THE SUNRISE CITY
FORT PIERCE
PLANNING DEPARTMENT Florida

TO: Nicholas Mimms, PE, City Manager
Honorable Mayor and City Commission

THROUGH: Rebecca Grohall, AICP, Planning Director

FROM: Maria Lewicka, AICP, Historic Preservation Planner

RE: **Application for Conditional Use with No New Construction**
Little Scholars Academy, Child Day Care Facility
810 S 6th Street.

DATE: February 7, 2019

STAFF REPORT

Property Owner: Hoyt C Murphy Inc. ETAL
509 Georgia Avenue
Fort Pierce, FL 34949

Applicant/Business Owner: Rodolfo Diaz
1310 SE Concha Street
Port St. Lucie, FL 34983

Applicant's Request: Approval of a Conditional Use Application (No New Construction) for the operation a child day care facility serving children ranging from 12 months to 5 years old.

Site Location: 810 S 6th Street

Parcel ID: 2415-601-0456-000-6

Current Zoning: C-3, General Commercial Zoning District

Future Land Use: GC, General Commercial

Site Size: **2.89 acres**

Surrounding Zoning

North	East	South	West
C-1/C-3	C-3	R-4	C-1/R-4

Utilities: Fort Pierce Utility Authority (FPUA)

Staff Analysis:

Request
In accordance with Sections 22-22, and 2276 Of the City Code, the applicant is asking for approval of a Conditional Use in order to accommodate the proposed Little Scholars Academy, a day care facility for children ranging from 12 months to 5 years old.

Background
The proposed 4,235 square foot day care facility is located at the Sunrise Plaza commercial center, located in General Commercial Zoning District. The Future Land Use of this property is General Commercial. The existing uses of the commercial center are retail, service, arcade and storage. The only change to the site plan will be addition of a playground for the proposed day care facility that would require elimination of three parking spaces, fencing, speed bumps and additional signage.

Little Scholars Academy
Little Scholars Academy facility is focused toward making day care available to lower income parents in St. Lucie County providing a learning environment structured around the concepts of promoting social, cognitive, language, physical skills and development for each age group. The facility will have five (5) classrooms. Maximum number of children allowed per DCF is 58. The children drop off will begin at 6:30 am and pick up will end promptly at 6:30 pm.

Playground
The propose playground will be fully fenced in. The asphalt will not be removed; instead, a mulched area and rubber mats will be laid out. The playground equipment will be anchored into the ground.

Parking Calculations
Although the proposed daycare playground will eliminate three parking spaces, the provided calculations show that there is still sufficient parking provided to serve all the remaining uses.

Parking spaces provided:

Retail	11,989 sq. ft.	1 parking space/200 sq. ft.	=	59.95
Personal Service	2,817 sq. ft.	1 parking space/200 sq. ft	=	14.09
Business Establishment	6,595 sq. ft.	1 parking space/300 sq. ft.	=	21.98
Arcade	50 machines	1 parking space/.75 machines No.	=	37.5
Daycare	5 classrooms	2 parking spaces/classroom	=	10

Total parking spaces required:		=		**143**
Total parking spaces provided:		**= 146 -3 (eliminated by playground)**	**=**	**143**

Technical Review Committee
Technical Committee reviewed the request for a Conditional Use at the November 14 meeting. All comments were acknowledged by the applicant.

Planning Board
At their January 8th, 2019 meeting, the Planning Board voted unanimously, to recommend approval of the requested Conditional Use with the following conditions:

1. Install at least two (2) additional speed bumps on the property and add additional safety signage.

2. Comply with City Code Section 22-60. *Off-street parking and loading* (j) *Lighting (1)a.* Please provide the lighting plan with a minimum average of two (2) footcandles.

Staff Recommendation

The requested Conditional Use with No New Construction is consistent with City Code, the Comprehensive Plan, and does not adversely affect the public health, safety, convenience and general welfare; Staff recommends approval of the Conditional Use the following conditions to be met prior to the Building Department Permit issuance:

1. Comply with City Code Section 22-60. *Off-street parking and loading* (j) *Lighting (1)a.* Please provide the lighting plan with a minimum average of two (2) footcandles.

The Planning Board recommended approval with the second condition:

2. Install at least two (2) additional speed bumps on the property and add additional safety signage.

THE SUNRISE CITY
FORT PIERCE
PLANNING DEPARTMENT Florida

RECEIVED
OCT 19 2018
CITY OF FORT PIERCE
PLANNING & ZONING

Conditional Use – No New Construction

Property address or Location 810 ~~846~~ S 6 Street Fort Pierce Florida 34952

Parcel ID #(s) 2415-601-0456-000-6

Project description Child Day Care Facility. Children Ranging from 12 month to 5 Years Old. No transportation, no cooking only catering services.

Hoyt C Murphy	Rodolfo Diaz/Owners
Property Owner(s)	**Applicant/Representative, Title, Company**
2400 S Ocean Dr PH 4200 D	1310 SE Concha Street
Street Address	Street Address
Fort Pierce FI 34949	Port Saint Lucie FL 34983
City State Zip	City State Zip
(772)971-7424 (Cell)	772 240 1929
Phone Number	Phone Number
hoytmurphy@hotmail.com	Littlescholars PSL@gmail.com
Email Address	Email Address

Property Owner(s) Acknowledgements: - This application will not be considered complete without the signature of all property owners of record, which shall serve as an acknowledgement of the submission of this application. The property owner's signature below shall also authorize the Applicant (if other than the property owner) and/or Representative to act in his/her behalf for the purposes of seeking approval for the application described herein.

Margaret A Murphy
Property Owner(s) Signature(s)

STATE OF FLORIDA -- COUNTY St. Lucie

The foregoing instrument was acknowledged before me this 18 day of October, 2018, by Margaret Anita Murphy who is personally known to me or has produced FL DL as identification.

Kristie F. Miranda
Signature of Notary

KRISTIE F. MIRANDA
State of Florida - Notary Public
Commission # GG 197974
My Comm. Expires 03-24-2022
Bonded Through
American Association of Notaries

INTAKE MEETINGS ARE REQUIRED FOR ALL SUBMITTALS. CALL (772) 467-3729

TO BE COMPLETED BY STAFF

Zoning	Future Land Use	Total Acres	Historic District	Historic Designation
				Contributing Individual Non-Contributing None

Pre-Application Meeting Date_____
Intake Planner_____
Planner Assigned_____
Approved By_____ Date _____
Comments_____

Fees_____ Control #_____ B. Permit #_____

Intake Date Stamp

☐ CONDITIONAL USE: NO NEW CONSTRUCTION

Submit one original, seven (7) hard copies and one (1) CD of the following for initial submittal, subsequent submittals will be required:

- ☐ *If no site improvements are required:*
  - ☐ As-built survey
  - ☐ Floor plan of existing building(s)
- ☐ *If parking and drainage improvements are required:*
  - ☐ As-built survey;
  - ☐ Site plan, to scale, including existing improvements and proposed parking, driveways, landscaping & storm drainage;
  - ☐ Lighting plan
- ☐ Complete, notarized application

Application Outlook

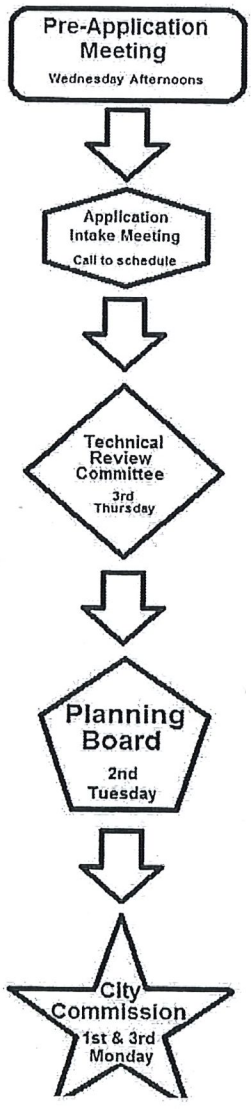

Application Type:

- ■ Conditional Use: No new construction with no site improvements
- ■ Conditional Use: No new construction with parking and drainage improvements

Site Information:

Building Size 4235 Parking Spaces: 10

Surrounding Uses: *(i.e. single family home, retail, industrial, etc.)*

North	South	East	West

The application for conditional use with the application for site plan review, when not exempt in accordance with the requirements of section 22-75, shall be reviewed as a unit in accordance with the requirements of section 22-58 except that:

(1) The city commission shall hold a public hearing in accordance with the provisions of section 22-143 prior to acting on the application for conditional use.

(2) In the event the city planning board disapproved the application for conditional use or in case of a protest against said application signed by twenty (20) per cent of the owners within five hundred (500) feet of the area included in said application, such application shall not be approved except by a four-fifths vote by the city commission.

(3) In permitting a conditional use or the modification of an existing conditional use, the city commission may impose, in addition to those standards and requirements expressly specified in this chapter, any condition which it finds to be necessary to protect the best interest of the surrounding property of the city.



Little SCHOLARS Academy

Vision:

Little Scholars Academy understand that children are the future. Little Scholars Academy facility is focused toward making daycare available to lower income parents in Saint Lucie County while still providing a learning environment that will be structured around the concepts of promoting social, cognitive, language, and physical skills and development for each age group.

Ages:

Our age group will be from 12 months through 5 year olds (Preschool aged). We will utilize and expose children to new experiences including indoor and outdoor learning as well as media/technology through computer learning.

Number of Children Per DCF Inspection:

Total Capacity being leased is 4235 sq feet

Total number of kids allowed per DCF inspection is 58

Hours of Operation:

6:30am -6:30pm

Drop off will begin at 6:30am and pick up will end promptly at 6:30pm.

Food and Meals:

Oúr goal is to feed children in Saint Lucie County at an early age. We will serve prepacked meal for breakfast, lunch and a snack in the afternoon at no additional cost. No cooking will be done onsite all meals will be prepacked/catered into the facility.

Transportation:

At this time we will not be transporting or picking up children from any facilities.

Playground:

There are will one designated areas for a playground. The playground area will be fully fenced in. The Asphalt will not be removed. Instead we will have rubber mats laid out as well as mulched area. The playground will be anchored into the ground for the safety of all the children. (See also Standard Operating Procedure for Playground Safety Entrance)

Parking:

An Architectural rendering has been provided showing that there is ample space for the daycare. As such the daycare will remove three spaces to accommodate the playground. There is handicap ramp in the front as well as handicap parking.

Traffic:

Proposed traffic flow to be changed in the back by designating the one way signs drawn on grown. Additionally on the North West Corner have a No Left Turn sign eliminating traffic. (See Traffic Diagram)

Playground

Standard Operating Procedure to Remove Children from Building onto Playground.

1.Ensure Fence located in exterior is locked at all times.
2. Place warning cones prohibiting vehicles from passing through during play time.
3. Open Playground gate.
4. Open gate from main building and file children in a single line.
4.In a single line allow for children to go into Playground.
5. Lock Playground area.

Once children are ready to be released from Playground area:

1-Place warning cones prohibiting vehicles from passing through during play time.
2-Unlock gate from main building.
3-In a single line collect children.
4-Unlock playground gate.
5-Collect children and house them in Main gate by main building having the door to main building open to brought in.
6-Lock Playground Gate
7-Lock Main gate.
8-Collect all cones.

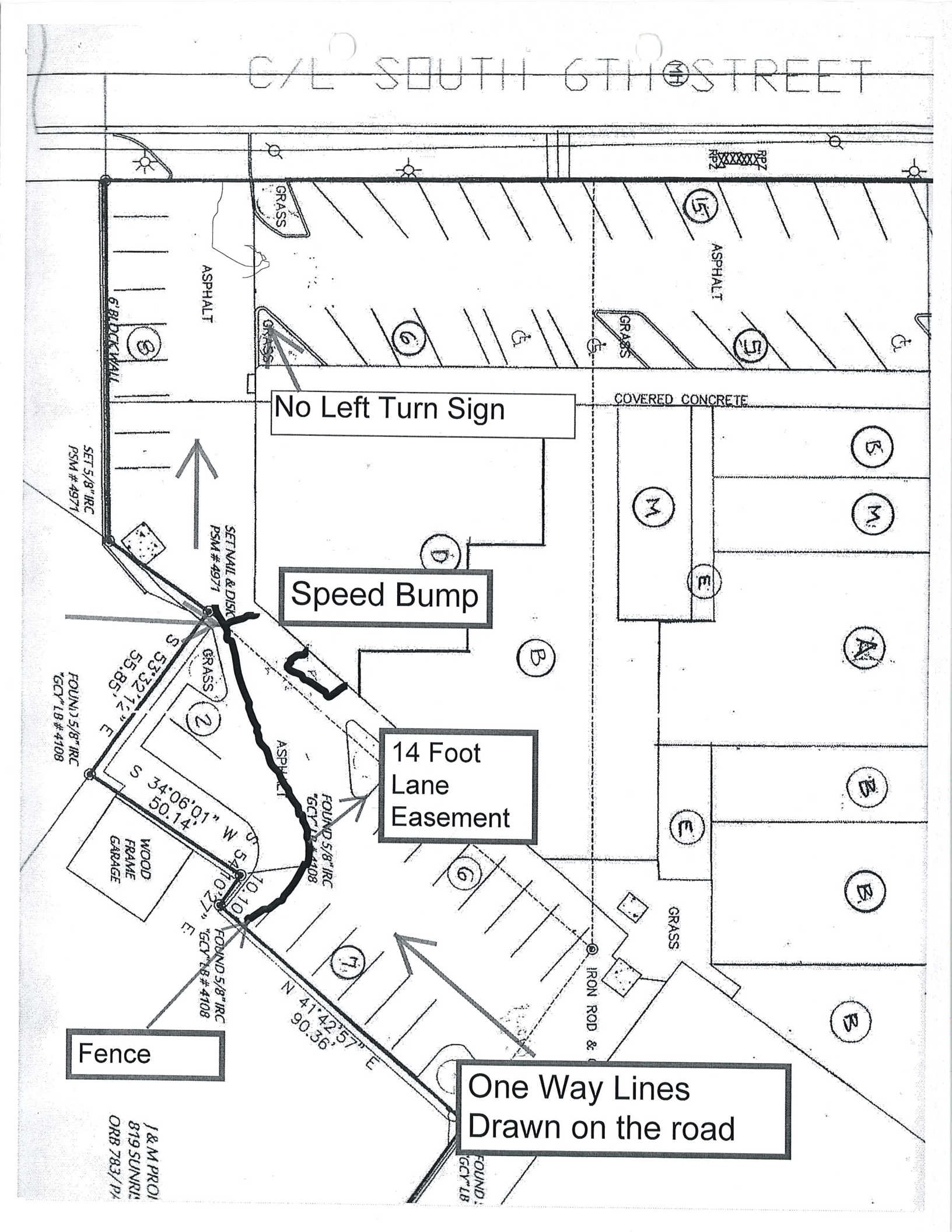
C/L SOUTH 6TH STREET
No Left Turn Sign
Speed Bump
14 Foot
Lane
Easement
Fence
One Way Lines
Drawn on the road
ASPHALT
GRASS
COVERED CONCRETE
6' BLOCK WALL
SET 5/8" IRC
PSM # 4971
SET NAIL & DISK
PSM # 4971
FOUND 5/8" IRC
"GCY" LB # 4108
WOOD
FRAME
GARAGE
IRON ROD &
S 53°32'58" E
55.21'
S 34°06'01" W
50.14'
N 41°42'57" E
90.36'

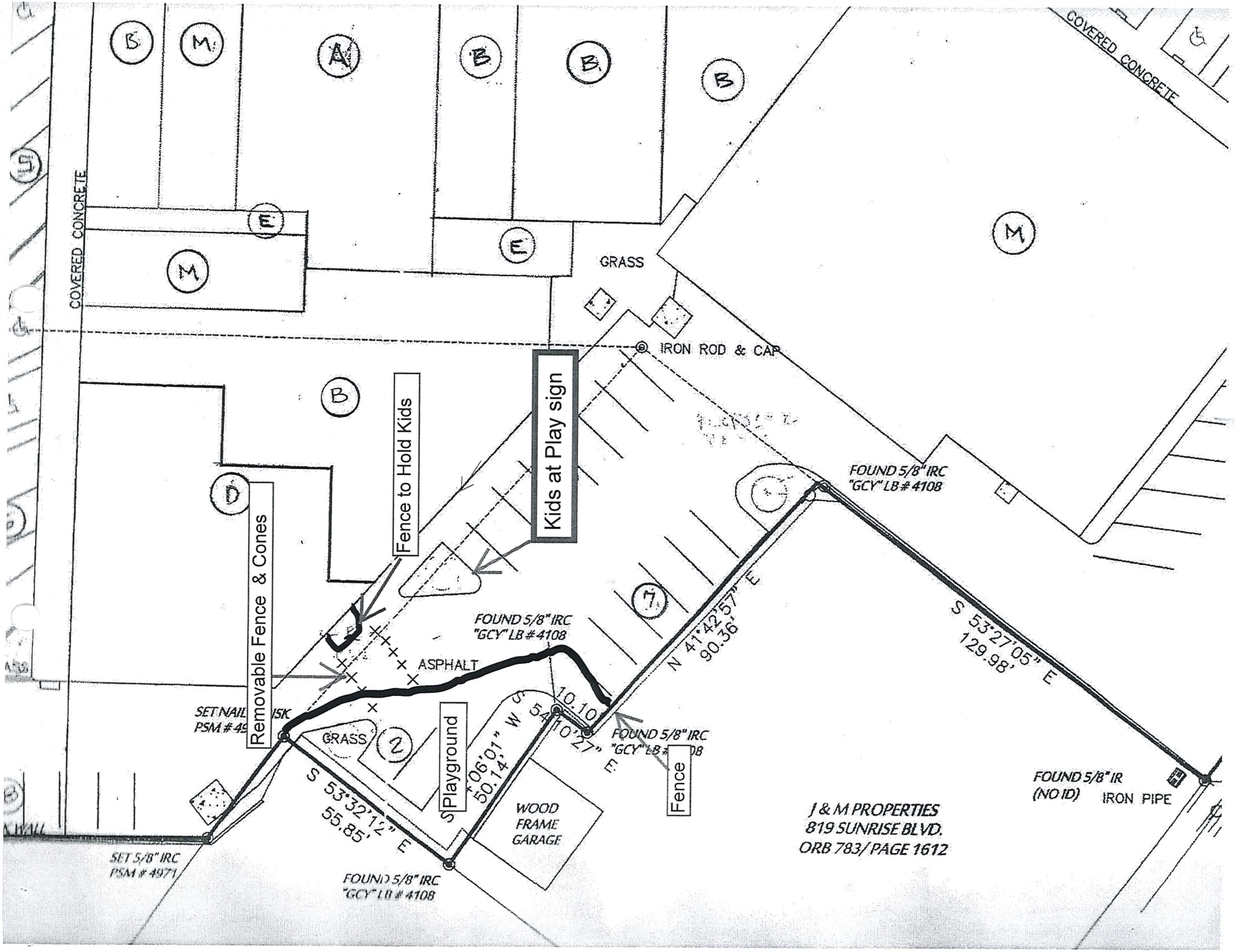
COVERED CONCRETE
COVERED CONCRETE
GRASS
IRON ROD & CAP
Fence to Hold Kids
Kids at Play sign
Removable Fence & Cones
FOUND 5/8" IRC "GCY" LB # 4108
FOUND 5/8" IRC "GCY" LB # 4108
ASPHALT
N 41°42'57" E 90.36'
S 53°27'05" E 129.98'
10.10
S 06°01" W 50.14'
S 53°32'12" E 55.85'
Playground
GRASS
WOOD FRAME GARAGE
Fence
FOUND 5/8" IRC "GCY" LB # 4108
FOUND 5/8" IR (NO ID) IRON PIPE
SET 5/8" IRC PSM # 4971
FOUND 5/8" IRC "GCY" LB # 4108
J & M PROPERTIES
819 SUNRISE BLVD.
ORB 783/PAGE 1612

Capacity Calculator Summary

This is to certify that I have completed reviewing the attached floor plans on:

Little Scholars Academy
810 S 6th Street Fort Pierce
No number yet assigned

INDOOR CAPACITY - 35 Sq Ft Rule		
Rooms	**Sq Ft**	**Capacity**
1	435.16	12.43
2	348.38	9.95
3	222.08	6.35
student lounge - 4	184.17	5.26
cafeteria - 5	847.92	24.23
Totals	**2037.7**	**58.22**

INDOOR CAPACITY - 20 Sq Ft Rule		
Rooms	**Sq Ft**	**Capacity**
Totals	**0.0**	**0.00**

The maximum licensing capacity is based on the most restrictive calculations.

Total Indoor Capacity	**58**
Licensing Capacity Based On Outside Area (Infants Included)	**90**
Total Wash Basin/Toilet Capacity	**135**
Total Septic Capacity	
MAXIMUM CAPACITY FOR THE FACILITY	**58**

Counselor Signature _____ Date _____

Supervisor Signature _____ Date _____

Director/Owner Signature _____ Date _____

By signing this document, I attest I have reviewed and understand the measurements which determine my program's capacity.

OTHER LIMITING FACTORS

Toilets and Wash Basin Sets - [One toilet and one wash basin equals one set]

5	Enter the total number of Toilet/Wash Basin **SETS**
135	Capacity

	Number of extra toilets **NOT** included in the sets above
1	Number of extra wash basins **NOT** included in the sets above

Septic Tanks - Complete **ONLY** if the facility has a septic tank

	Enter the Department of Health's approved capacity

Infants

	Enter the number of infants

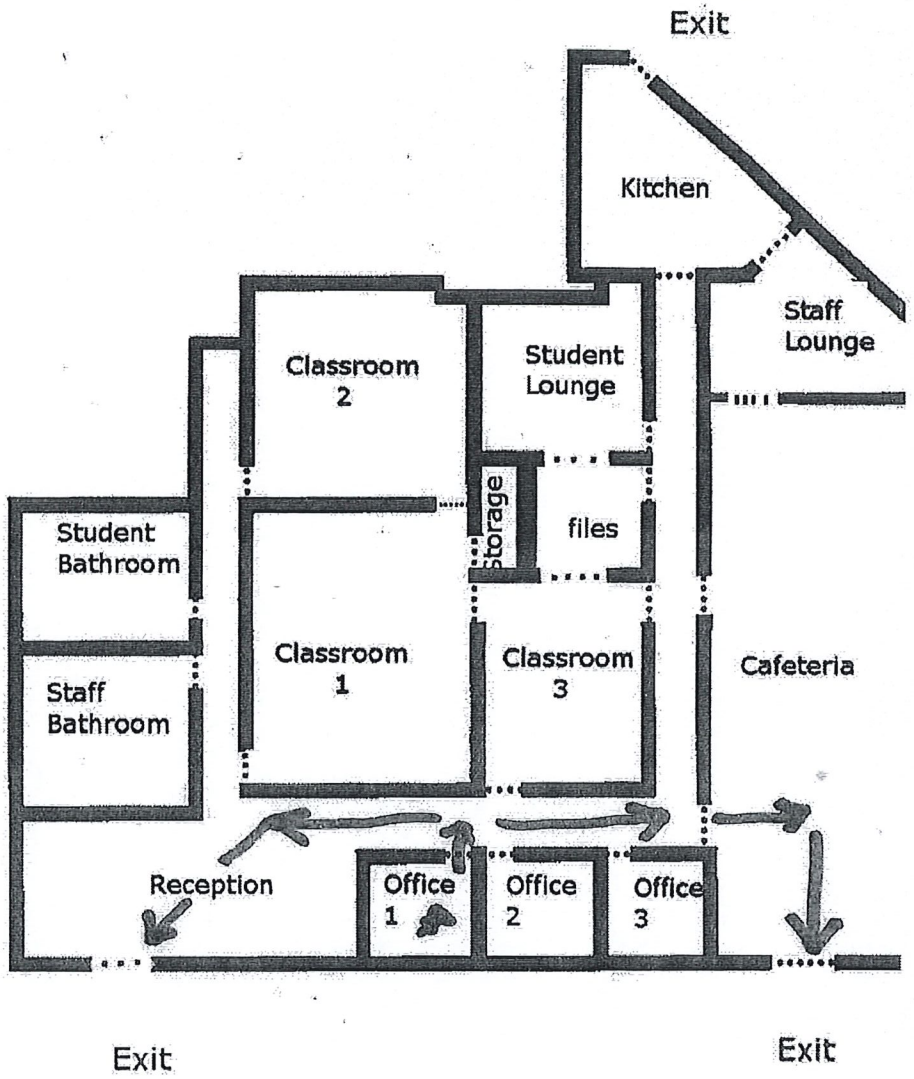
Exit
Kitchen
Staff Lounge
Classroom 2
Student Lounge
Storage
files
Student Bathroom
Classroom 1
Classroom 3
Cafeteria
Staff Bathroom
Reception
Office 1
Office 2
Office 3
Exit
Exit

OUTDOOR AREAS

The minimum square footage per child required for licensing purposes is **22.5**.

Capacity Without Considering Infants | **90.00**

OUTSIDE AREA #1

Sq, Rec or Par 1	Measurements Length/ Feet	Length/ Inches	Width Feet	Width Inches	Square Feet
Usable Sq Ft	63	5	32		2029.33
Non-Usable					0.00
Non-Usable					0.00
Non-Usable					0.00
Non-Usable					0.00
				Total	2029.33
				Capacity	90.19

Sq, Rec or Par 2	Measurements Length/ Feet	Length/ Inches	Width Feet	Width Inches	Square Feet
Usable Sq Ft					0.00
Non-Usable					0.00
Non-Usable					0.00
Non-Usable					0.00
Non-Usable					0.00
				Total	0.00
				Capacity	0.00

Sq, Rec or Par 3	Measurements Length/ Feet	Length/ Inches	Width Feet	Width Inches	Square Feet
Usable Sq Ft					0.00
Non-Usable					0.00
Non-Usable					0.00
Non-Usable					0.00
Non-Usable					0.00
				Total	0.00
				Capacity	0.00

Sq, Rec or Par 4	Measurements Length/ Feet	Length/ Inches	Width Feet	Width Inches	Square Feet
Usable Sq Ft					0.00
Non-Usable					0.00
Non-Usable					0.00
Non-Usable					0.00
Non-Usable					0.00
				Total	0.00
				Capacity	0.00

Sq, Rec or Par 5	Measurements Length/ Feet	Length/ Inches	Width Feet	Width Inches	Square Feet
Usable Sq Ft					0.00
Non-Usable					0.00
Non-Usable					0.00
Non-Usable					0.00
Non-Usable					0.00
				Total	0.00
				Capacity	0.00

Sq, Rec or Par 6	Measurements Length/ Feet	Length/ Inches	Width Feet	Width Inches	Square Feet
Usable Sq Ft					0.00
Non-Usable					0.00
Non-Usable					0.00
Non-Usable					0.00
Non-Usable					0.00
				Total	0.00
				Capacity	0.00

Sq, Rec or Par 7	Measurements Length/ Height Feet	Length/ Height Inches	Width Feet	Width Inches	Square Feet
Usable Sq Ft					0.00
Non-Usable					0.00
Non-Usable					0.00
Non-Usable					0.00
Non-Usable					0.00
				Total	0.00
				Capacity	0.00

Sq, Rec or Par 8	Measurements Length/ Height Feet	Length/ Height Inches	Width Feet	Width Inches	Square Feet
Usable Sq Ft					0.00
Non-Usable					0.00
Non-Usable					0.00
Non-Usable					0.00
Non-Usable					0.00
				Total	0.00
				Capacity	0.00



Little **SCHOLARS** Academy

12Month-24 Month Curriculum

Learning happens at every stage, but these next 12 month are geared toward exploring each child's stage of developmental learning. This is why the infant time period is perhaps the most significant. As educators, we work together with parents to achieve a healthy balance between home and at Little Scholars Academy. Some may be learning how to walk while others are already exploring the many other facets of their emerging development

Our teachers will encourage babies to communicate by playing games that will help facilitate growth and development at every level. We will read, sing and talk to your baby to build a strong foundation for language, social and emotional development and learning. Through holding, positive praise, eye contact, and providing other basic needs we will develop a trusting and nurturing relationship with your baby.

Our teachers will work closely with your child to promote large gross motor skills to build strength with head and core control.

Goals for your child at this stage will be to build on their developmental skills. Progress Reports will be provided as your child is masters these goals. These reports will be a tool to communicate how your child is measuring and may be used to report to your pediatrician.



Little **SCHOLARS** Academy

Curriculum

Toddler 1 Schedule

6:30 – 8:00 Arrival
8:00 – 8:30 Breakfast
8:30 – 9:30 Free Choice Play Time (socializing time)
9:30-10:00 Outdoor Play Time
10:00 – 10:30 Morning Meet & Greet (sing songs, music/dance, etc...)
10:30 – 11:30 Development Learning and Communicating Games

11:30 - 12:00 Lunch
12:00 – 1:30 Read Aloud Time
1:30 – 2:00 Outdoor Play Time
2:00 – 3:30 Quiet/Nap Time (quiet play for children who do not sleep)
3:30 – 4:00 Snack Time/
4:00 – 5:30 Center Play (socializing time)
5:30-6:30 Pick up



Little SCHOLARS Academy

3 & 4 Year old Curriculum

At 3 and 4 year old's, children begin a period of development crucial to the beginning of preschool. Activities in our program encourage thinking and problem solving. Our curriculum and learning centers help develop an appreciation for learning. With interactive books, reading, music, math, science and an encouragement in their creativity. When your child enters these classrooms, your child should be completely potty trained. Beginning at 3 years of age we will begin working on the following goals:

Identifying letter sounds and names

Letter formation and writing through tracing

Mastery of basic shapes and colors

Counting

Number recognition 1-20

Sorting objects through shape, size, color

Rote counting (reciting numbers in order)

Enhancing fine motor skills through coloring, drawing stick figures, cutting, tracing etc.

Enhancing activities with musical activities like dancing, singing, rhythmic patterns etc.

Building on cause and effect relationships

Building social communications and interactions between adults and peers

Computer curriculum specific to level as well as daily reports are provided to update each child's family on feeding, nap times, and all other activities accomplished each day. Progress Reports will be provided as your child is about to graduate from classroom to classroom. These reports will be a tool to communicate with your pediatrician.



Little SCHOLARS Academy

3 & 4 Year old Schedule

6:30 – 8:00 Arrival
8:00 – 8:30 Breakfast/Expressive Writing
8:30 – 9:30 Free Choice Play Time (socializing time)
9:30 – 10:15 Morning Meeting (review shapes, colors, daily activities, etc…)
10:15 – 11:15 Themed Learning Activity
11:15 – 11:30 Clean-up, wash-up, & get ready for lunch
11:30 - 12:00 Lunch
12:00 – 12:30 Free Choice Play Time
12:30 – 1:00 Outdoor Play Time
1:00 – 1:30 Read aloud story time
1:30 – 3:00 Nap/Quiet time (quiet play for children who do not sleep)
3:00 – 3:30 Snack Time
3:30 - 4:30 Outdoor play/Combine classrooms as needed
4:30 – 5:30 Free Choice Centers (socializing time)
5:30 Pick up



Little **SCHOLARS** Academy

4-5 (Pre-K)Year old Curriculum

Our Pre-K program is based upon the idea that children begin to develop an understanding of what will be expected of them when they enter school. We would like to make the transition from home to school easier for children and parents. Our curriculum program is child inviting combining play and curriculum into one. We embrace the child spirit and create a curriculum that introduces children to a world of learning using age appropriate and child friendly year round themes. Through these themes, not only are children learning science and social studies, but also critical mathematical and reading skills. The program will give children the preparation needed to give them a healthy head start in their life long journey of learning.

Our children will increase their learning through computer curriculum specific to level as well as daily reports are provided to update each child's family. Progress Reports will be provided as your child is about to graduate from classroom to classroom. These reports will be a tool to communicate with your pediatrician.



Little **SCHOLARS** Academy

4-5(Pre-K) Year old Schedule

6:30 – 8:00 Arrival
8:00 – 8:30 Breakfast/Expressive Writing
8:30 – 9:30 Free Choice Play Time
9:30 – 10:15 Review shapes, colors, daily activities, etc…)
10:15 – 11:15 Themed Learning Activity
11:15 – 11:30 Clean-up, wash-up, & get ready for lunch
11:30 - 12:00 Lunch
12:00 – 12:30 Computer Learning
12:30 – 1:00 Outdoor Play Time
1:00 – 1:30 Read aloud story time
1:30 – 3:00 Nap/Quiet time (quiet play for children who do not sleep)
3:00 – 3:30 Snack Time
3:30 - 4:30 Outdoor play/Combine classrooms as needed
4:30 – 5:30 Free Choice Centre's (socializing time)
5:30 Pick up



THE SUNRISE CITY FORT PIERCE Florida

Application for Conditional Use
810 S 6th Street
Location Map

N
W E
S

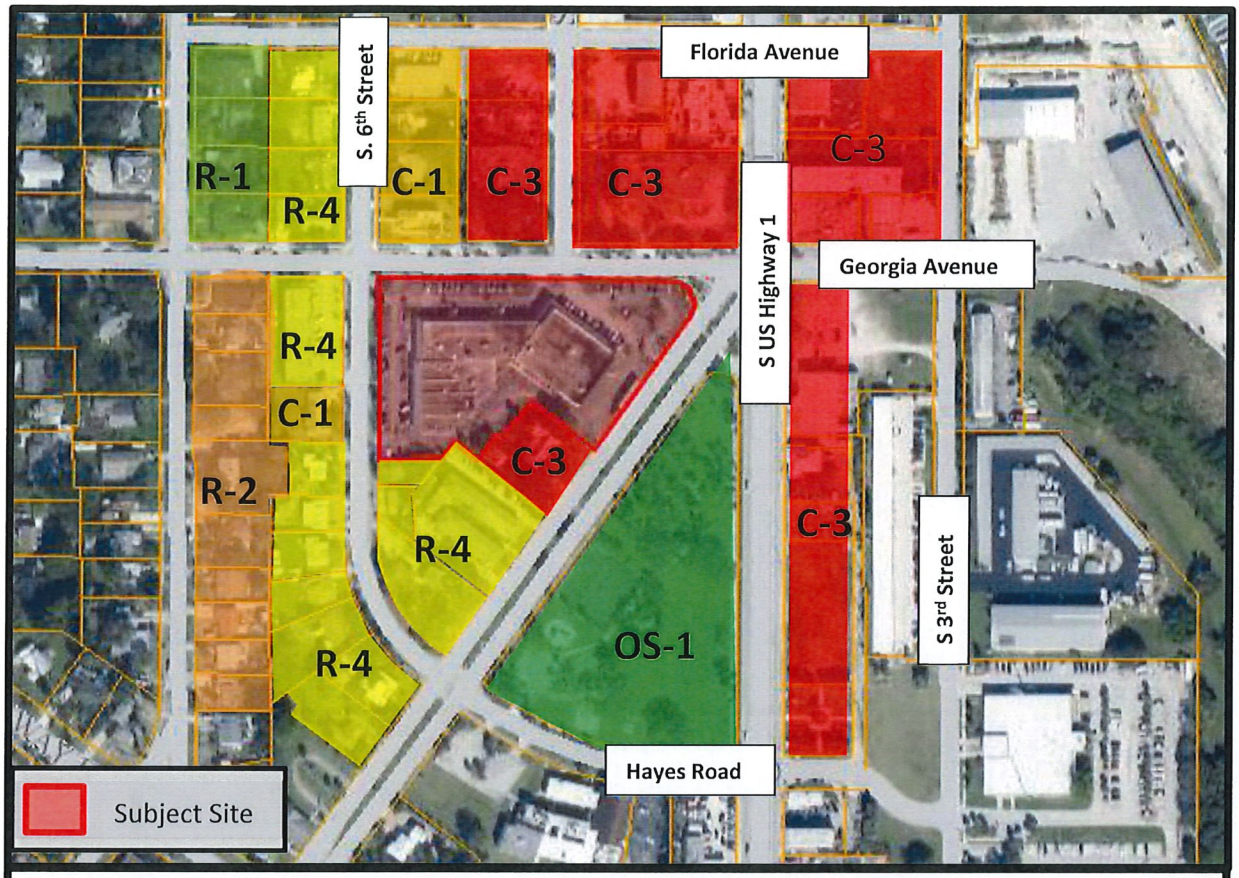

THE SUNRISE CITY FORT PIERCE Florida

Application for Conditional Use
810 S 6th Street
Zoning Map

N W E S

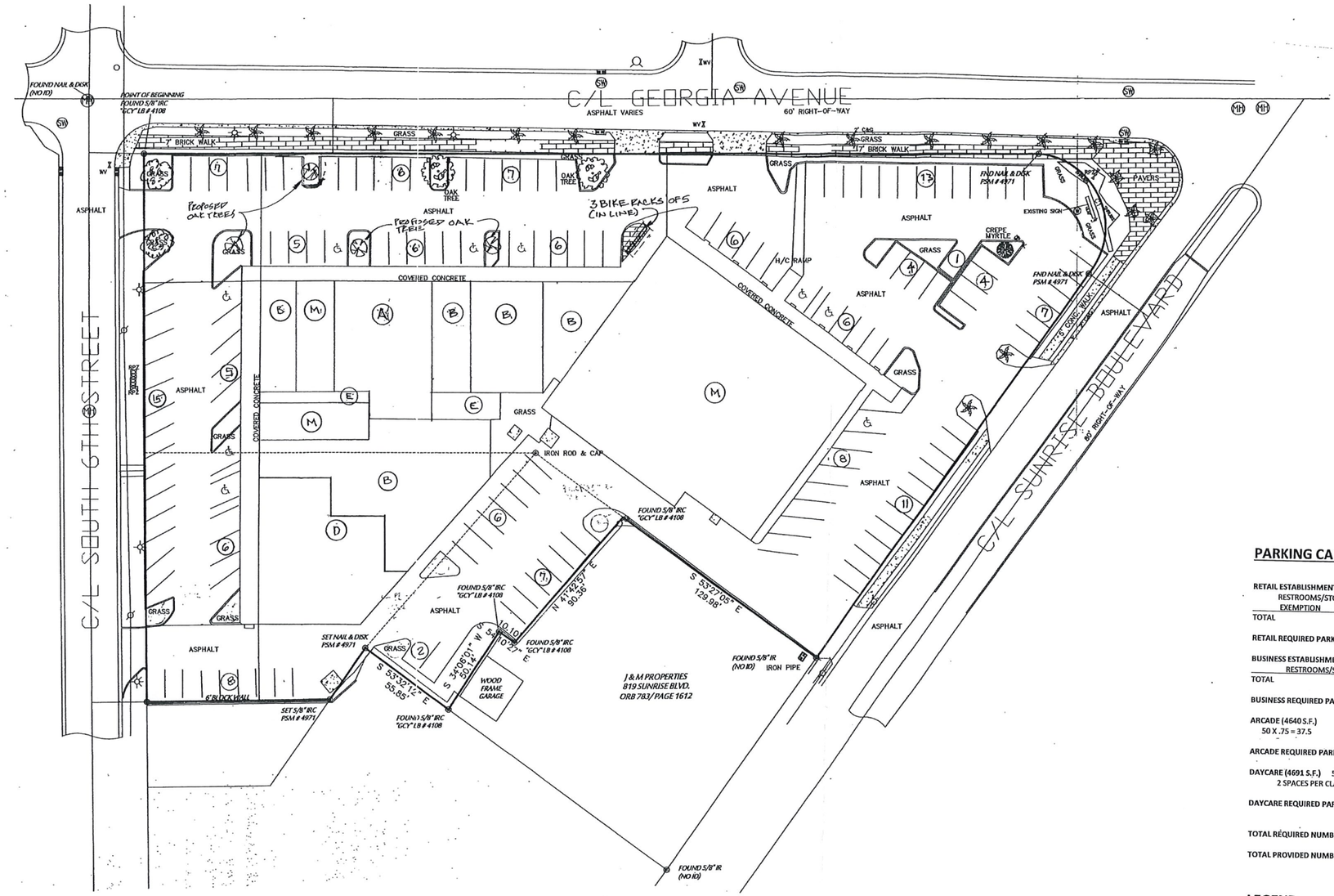

PLOT PLAN NORTH ↓ 1"=30'

INFORMATION TAKEN FROM SURVEY PREPARED BY CHARLES ARNOLD SURVEYING, INC., JOB # 14-813 DATED 7/6/14

PARKING CALCULATIONS:

RETAIL ESTABLISHMENTS	17,064 S.F.
RESTROOMS/STORAGE	4,321 S.F.
EXEMPTION	1,200 S.F.
TOTAL	11,543 S.F.
RETAIL REQUIRED PARKING	57.71 SPACES
BUSINESS ESTABLISHMENTS	12,065 S.F.
RESTROOMS/STORAGE	1,415 S.F.
TOTAL	10,650 S.F.
BUSINESS REQUIRED PARKING	35.5 SPACES
ARCADE (4640 S.F.) 50 MACHINES 50 X .75 = 37.5	
ARCADE REQUIRED PARKING	37.5 SPACES
DAYCARE (4691 S.F.) 5 CLASSROOMS 2 SPACES PER CLASSROOM = 10	
DAYCARE REQUIRED PARKING	10 SPACES
TOTAL REQUIRED NUMBER OF SPACES	140.71 SPACES
TOTAL PROVIDED NUMBER OF SPACES	146 SPACES

LEGEND

- (M) MERCANTILE
- (B) BUSINESS
- (A) ARCADE
- (E) EXIT ACCESS ONLY
- (D) DAYCARE

ARCHITECT

Architectonic Inc

806 DELAWARE AVENUE
FORT PIERCE, FLORIDA 34950
T: 772 460 7751
F: 772 460 4244

WWW.ARCHITECTONICINC.COM

STATE REG # AA26003348

COPYRIGHT 2017

PROJECT

LITTLE SCHOLARS ACADEMY
FT. PIERCE, FLORIDA

CLIENT

CONSULTANTS

REGISTRATION

MICHAEL J. SEAL, AIA
AR96898

REVISIONS

NO.	DATE	REVISION

KEY PLAN

SHEET TITLE / SHEET NUMBER

S-1 OF 1

PROJECT NUMBER C18058

DATE

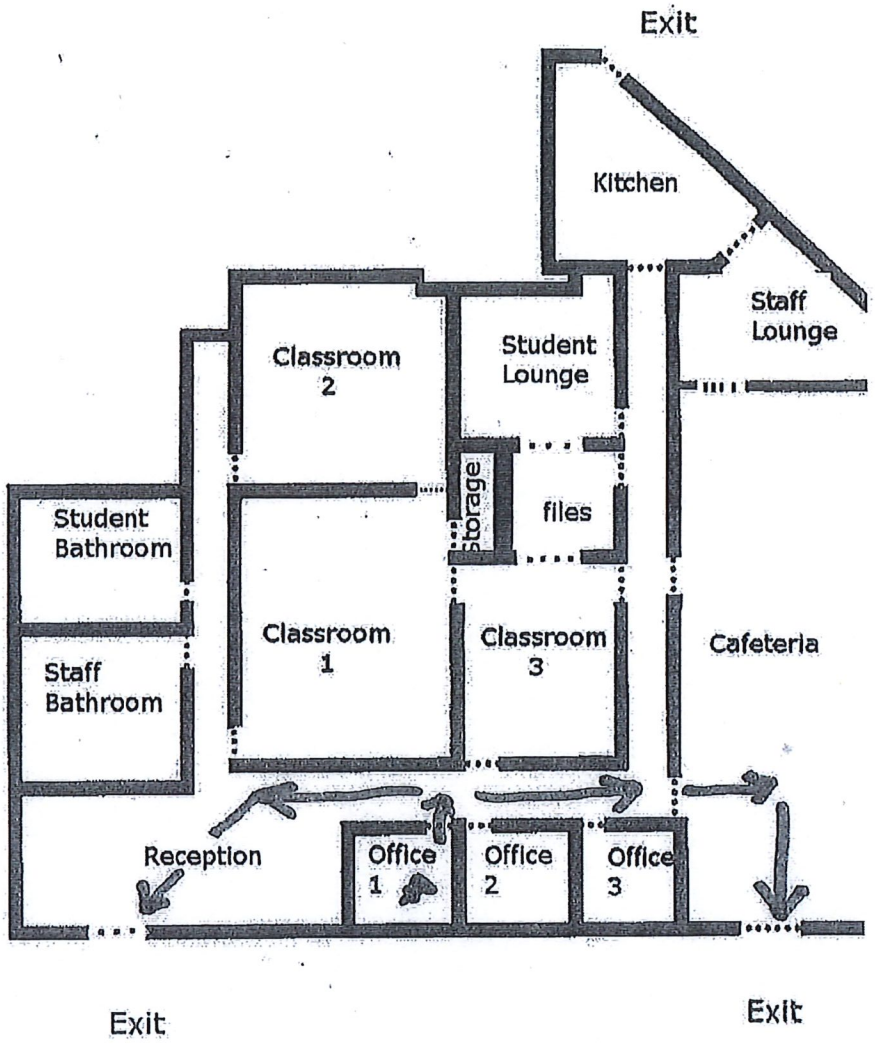
Exit
Kitchen
Staff
Lounge
Classroom
2
Student
Lounge
storage
files
Student
Bathroom
Classroom
1
Classroom
3
Cafeteria
Staff
Bathroom
Reception
Office
1
Office
2
Office
3
Exit
Exit

THE SUNRISE CITY
FORT PIERCE
PLANNING DEPARTMENT Florida

October 14, 2018

Rodolfo Diaz
1310 SE Concha Street
Port St. Lucie, FL 34983

SUBJECT: **Little Scholars Academy – 816 S. 6th Street**
TECHNICAL REVIEW PROJECT: # 18-04000019
CONDITIONAL USE

Comments:

1. Provide a document for the plaza that list each individual business and what square footage they take up. Also list any vacant storefronts and what their square footage is. These items will be needed so the Planning Department can verify parking availability for the plaza.

Please provide a written response to all TRC comments and provide submittal (10 copies) of all new materials by November 29, 2018 to advance to the December Planning Board. The presented review is specific to the proposed facility. Please contact me should you have any questions regarding the project at (772) 467-3742 or by e-mail: bcreagan@city-ftpierce.com.

Sincerely,

Brandon Creagan, LEED Green Associate
Planner

THE SUNRISE CITY
FORT PIERCE
Florida
ENGINEERING
DEPARTMENT

RECEIVED
NOV 08 2018
CITY OF FORT PIERCE
PLANNING & ZONING

To : Brandon Creagan, Planner

From : John R. Andrews, P.E., City Engineer

Re : Little Scholars Academy Conditional Use – 816 S. 6th Street
TRC No. 18-04000019

Date : November 7, 2018

This is to advise you that we have completed the review of the following documents as received by this office on November 5, 2018:

- [x] Conditional Use Application
- [ ] Test Reports & Related Documents
- [ ] Record Drawings
- [ ] Clearances from all applicable Local, State and Federal Agencies
- [ ] P/D Drawings
- [ ] Certificate of Completion
- [ ] Permits from applicable Local, State & Federal Agencies

Based on our reviews and appropriate site final inspection, we

- [x] Recommend
- [ ] Do Not Recommend

- [x] Approval of Conditional Use
- [ ] Building Permit
- [ ] C/O

Developer, Owner, Engineer, Contractor and other members of the Development Team must be aware, the above recommendation is based only on the construction requirements of the engineering plans and other engineering documentation approved by this department. The Development Team shall be responsible for the compliance with other City department requirements and all approved documents, as well as Local, State and Federal regulations. The development requirements for this project may necessitate additional construction requirements that are not subject to this department's review for approval.

- [ ] See attached for engineering comments

JRA/TST/tst

C:\Users\jbye\AppData\Local\Temp\notes5D3EFE\CU Approval Memo - 110718.docx

November 9th, 2018

Project: **Little Scholars Academy**
Subject: **SURVEY REVIEW**
To: Brandon Creagan
From: Rod Reed, PLS
SLC-Engineering Division

All comments are based on the Standards of Practice per 5J-17.050 thru 5J-17.052

SURVEY:

1) Please provide a boundary and topographic survey of the site with flood zones depicted. In addition all wetland areas (if any) will need to be identified and shown on the survey. All elevations will be referenced to NAVD 1988. The survey needs to be performed by a professional surveyor licensed to practice in the State of Florida.

Please provide a written response to all comments

Rod Reed, County Surveyor
St. Lucie County, Fl.
2300 Virginia Avenue
Ft. Pierce, Fl. 34982-5652
www.stlucieco.org
Ph. (772) 462-1721
E-mail reedr@stlucieco.org

THE SUNRISE CITY
FORT PIERCE
BUILDING DEPARTMENT Florida

BUILDING DEPARTMENT
TECHNICAL REVIEW COMMITTEE (TRC)
COMMENT FORM

Meeting Date: November 15, 2018
Property Address: 816 S 6th St.
Property Name: Little Scholars Academy – Cond. Use
Project Name:
Planner: Brandon Creagan

Please be advised that the project may trigger the requirements indicated below:

☐ 1. Building Official or his representative has no comment at the time of this meeting, but reserves submission of comments upon completion of the official plan review.

☐ 2. Pre-construction meeting with the City's Building Department is requested.

☑ 3. Any construction will need to meet the requirements of the Florida Building Code 6th Edition.

☐ 4. Means of egress is required.

☐ 5. Means of ingress is required.

☑ 6. Must meet the following Accessibility requirements:

- ☑ Accessible route
- ☑ Handicapped parking spaces
- ☑ Means of egress

☐ 7. Change of Use required

- ☐ to include a signed and sealed Life Safety Plan
- ☐ to include a signed and sealed detailed comprehensive building plan.

☐ 8. Property exists in Special Flood Hazard Area. All Federal and State requirements shall be addressed.

☐ 9. Flood Development Permit required.

☑ 10. Building Permit required.

☑ 11. Signed and sealed construction drawings required.

☑ 12. Will need to meet the Fire Code.

☐ 13. Sprinkler system is required.

☐ 14. Smoke alarm system is required.

☐ 15. Other

Additional Comments/Requirements:

ITEMS 3, 10, AND 11 WILL NOT APPLY IF NO CONSTRUCTION REQUIRED. CLASSROOMS EXISTING?

Building Official's or Representative's Signature _____ Date: 11-7-18

Michelle Franklin, CFA -- Saint Lucie County Property Appraiser -- All rights reserved.

Property Identification

Site Address: 509 GEORGIA AVE
Sec/Town/Range: 15/35S/40E
Map ID: 24/15N
Zoning: C3

Parcel ID: 2415-601-0456-000-6
Account #: 24873
Use Type: 1600
Jurisdiction: Fort Pierce

Ownership

Hoyt C Murphy Inc
Benson Family Prtnshp
2400 S Ocean Dr PH 4200 D
Fort Pierce, FL 34949



Legal Description

PINEWOOD S/D BLK 32 BEG NW COR BLK 32 RUN S ON E RD R/W LI OF S 6 ST 300.20 FT,TH E // TO GEORGIA AV 101.50 FT,TH NELY 36.2 FT,TH SELY 52.7 FT,TH NELY 50.14 FT,TH SELY 10 FT,TH NELY 90.36 FT,TH SELY 129.98 FT,TH NELY ALG RD R/W LI 255.5 FT TO CURVE CONC NELY,R OF 40 FT,TH NWLY ALG ARC 85.5 FT,TH WLY ALG S RD R/W LI OF GEORGIA AVE 488.5 FT TO POB (2.89 AC) (OR 846-2659, 2662, 2668: 936-1137: 957-845)

Current Values

Just/Market Value:	$1,128,300
Assessed Value:	$1,128,300
Exemptions:	$0
Taxable Value:	$1,128,300

Taxes for this parcel: SLC Tax Collector's Office
Download TRIM for this parcel: Download PDF

Total Areas

Finished/Under Air (SF):	38,164
Gross Area (SF):	42,670
Land Size (acres):	2.89
Land Size (SF):	125,932

Sale History

Date	Book/Page	Sale Code	Deed	Grantor	Price
Nov 1, 1994	0936 / 1137	XX02	WD	HOYT C MURPHY INC	$100
May 27, 1993	0846 / 2659	XX02	WD	FERBER INVESTMENTS INC	$681,500
Mar 1, 1992	0785 / 0838	XX02	QC	Paul S Ferber	$100
Jun 1, 1984	0434 / 1351	XX02	CV		$975,000
Feb 1, 1984	0423 / 1236	XX01	CV		$47,500

Building Information (1 of 1)

Finished Area: 38,164 SF

Gross Total Area: 42,670 SF

Exterior Data

View:
Building Type: NSCT
Grade: Y_D
Story Height: 1 Story

Roof Cover: Tar & Gravel
Year Built: 1959
Effective Year: 1970
No. Units: 9

Roof Structure: BarJst/Rigid
Frame:
Primary Wall: CB Stucco
Secondary Wall:

Interior Data

Bedrooms: 0
Full Baths: 0
Half Baths: 0
A/C %: 100%

Electric: MAXIMUM
Heat Type: FrcdHotAir
Heat Fuel: ELEC
Heated %: 100%

Primary Int Wall:
Avg Hgt/Floor: 0
Primary Floors: Carpet
Sprinkled %: 100%





Sketch Area Legend

Sub Area	Description	Area	Fin. Area	Perimeter
BAS	BASE AREA	38164	38164	1212
CN3	CANOPY	4506	0	1175

Special Features and Yard Items

Type	Qty	Units	Year Blt
CONCRETE LOW	1	6040	1959
CHAINLINK 4'	1	240	1959
CEMENT CURB	1	2677	1959
SINGLE LIGHT	1	15	1959
ASP2 LOW	1	71450	1959

Current Year Values

Current Values Breakdown

Building:	$674,900
Land:	$453,400
Just/Market:	$1,128,300
Ag Credit:	$0
Save Our Homes or 10% Cap:	$0
Assessed:	$1,128,300
Exemption(s):	$0
Taxable:	$1,128,300

Current Year Exemption Value Breakdown

Tax Year	Grant Year	Code	Description	Amount

Current Year Special Assessment Breakdown

Start Year	AssessCode	Units	Description	Amount
2010	0041	52	Fort Pierce Stormwater Charge	$2,808.00

This does not necessarily represent the total Special Assessements that could be charged against this property. The total amount charged for special assessments is reflected on the most current tax statement and information is available with the SLC Tax Collector's Office .

Historical Values

Year	Just/Market	Assessed	Exemptions	Taxable
2018	$1,128,300	$1,128,300	$0	$1,128,300
2017	$1,100,000	$1,100,000	$0	$1,100,000
2016	$1,149,300	$1,149,300	$0	$1,149,300

Permits

Number	Issue Date	Description	Amount	Fee

F00-000555	May 2, 2000	Demolition	$0	$0
F00-000990	Aug 9, 2000	Alterations/Remodeling	$45,000	$0
F01-000599	May 11, 2001	Alterations/Remodeling	$3,000	$0
F99-0001362	Nov 15, 1999	Roof	$33,600	$0
F99-0001517	Jan 25, 2000	Alterations/Remodeling	$5,000	$0
F89000980M	Sep 1, 1989	Alterations/Remodeling	$500	$500
F90000134A	Feb 1, 1990	Alterations/Remodeling	$18,000	$18,000
F95-001080	Sep 28, 1995	Alterations/Remodeling	$200	$200
F98-001186	Sep 17, 1998	Alterations/Remodeling	$1,500	$1,500
F01-1562	Nov 26, 2001	Demolition	$2,000	$100
F01-1548	Dec 20, 2001	Alterations/Remodeling	$80,000	$925
F01-1548A	Dec 20, 2001	Alterations/Remodeling	$0	$0
F02-58	Jan 28, 2002	Alterations/Remodeling	$12,500	$250
F02-132	Feb 7, 2002	Alterations/Remodeling	$6,000	$185
RF2003352	Sep 20, 2003	Roof	$20,000	$325
MC2004320	Oct 20, 2004	Air Conditioning Only	$10,000	$75
RF20052424	Aug 3, 2005	Roof	$17,800	$178
0800000062	Feb 25, 2008	Additions to existing construction	$8,000	$80
0800000502	Mar 27, 2008	Air Conditioning Only	$5,424	$75
BP09-2467	Dec 28, 2009	Air Conditioning Only	$12,700	$150
BP10-1966	Sep 3, 2010	Alterations/Remodeling	$4,600	$140
BP10-1967	Sep 3, 2010	Alterations/Remodeling	$8,850	$89
BP10-1083	May 20, 2010	Air Conditioning Only	$3,375	$150
BP11-2989	Dec 19, 2011	Air Conditioning Only	$4,250	$154
BP12-0486	Mar 19, 2012	Air Conditioning Only	$4,895	$155
BP12-0487	Mar 14, 2012	Electric	$600	$155
BP13-1829	May 14, 2013	Air Conditioning Only	$2,720	$155
BP13-1907	May 22, 2013	Plumbing	$600	$155
BP13-2043	Jun 4, 2013	Electric	$300	$104
BP13-2277	Jul 12, 2013	Air Conditioning Only	$3,682	$155
BP14-0425	Feb 21, 2014	Alterations/Remodeling	$2,450	$83
BP14-1693	Jun 16, 2014	Plumbing	$850	$155
BP14-1721	Aug 5, 2014	Electric	$1,500	$155
BP14-2114	Sep 18, 2014	Wall	$1,800	$241
BP14-3075	Feb 5, 2015	Alterations/Remodeling	$85,000	$883
BP15-0518	Mar 23, 2015	Electric	$495	$80
BP16-2328	Sep 2, 2016	Air Conditioning Only	$9,600	$0
BP17-73	Jan 1, 2017	Occupancy Change	$0	$0
BP17-0073	Jan 11, 2017	Electric	$1,800	$0
BP17-1277	May 3, 2017	Plumbing	$1,200	$0

Notice: This does not necessarily represent all the permits for this property.
Click the following link to check for additional permit data in Fort Pierce

This information is believed to be correct at this time but it is subject to change and is not warranted.
© Copyright 2018 Saint Lucie County Property Appraiser. All rights reserved.

THE SUNRISE CITY
FORT PIERCE
PLANNING DEPARTMENT Florida

PUBLIC NOTIFICATION CERTIFICATION

PROJECT NAME: Conditional Use - Little Scholars Academy – 2610 Orange Avenue

NOTICES PROVIDED PURSUANT TO: City Code Section 22-143, Public Hearings A,B,C and D

NOTICE BY NEWSPAPER: February 4, 2019

NOTICE BY MAIL: February 6, 2019

NOTICE BY SIGNS: February 6, 2019

VERIFIED BY: Maria Lewicka **TITLE:** Historic Preservation Planner

SIGNATURE: **DATE:** February 13, 2019

City Commission Regular Meeting **12.c.**

Meeting Date: 02/19/2019

Re: Conditional Use - Kimberly Jones Dwelling Rental - 355 S. Ocean Drive #601

Submitted For: Rebecca Grohall, Director, Planning & Zoning

SUBJECT:

Quasi-Judicial Hearing - Review and approval of an application for Conditional Use with No New Construction submitted by property owner Kimberly Jones, to operate a dwelling rental for more than 31 days, but less than 6 months at 355 S. Ocean Drive Apt. 601 in Fort Pierce, FL. The property is zoned Hutchinson Island Medium Density Residential (R4-A) Parcel ID: 2401-522-0023-000-7.

SUMMARY:

- The applicant is requesting the review and approval of a Conditional Use to operate a Dwelling Rental at 355 S. Ocean Drive #304 to offer lodging of less than six (6) months and a minimum of thirty-one (31) days to guests.
- The subject property is a part of the Avalon Beach Club Condominiums.
- The subject condo apartment contains (3) bedrooms and two and a half (2 1/2) bathrooms. The subject condo apartment has two (2) designated and paved parking spaces for the unit.
- The property is zoned Hutchinson Island Medium Density Residential Zone (R4-A).

RECOMMENDATION:

The proposed use presents the provision of limited transient lodging accommodations to the general public, representing a limited commercial use that is compatible with the surrounding neighborhood of this location, and is generally consistent with the City's Land Development Code and Comprehensive Plan with appropriate restriction therefore; Staff recommends the City Commission **approve** the request with the following conditions:

1) The maximum occupancy ensures compliance with City Code Section 8.5-43. - Required space in dwelling units, based upon the size of each unit;
2) Registration of the property manager accessible at all times, to resolve complaints or violations of City Code;
3) Issuance of guide booklets (available from Code Enforcement) for renters regarding local rules and public service resources to minimize conflicts; and
4) The applicant files for and obtains St. Lucie County & City of Fort Pierce Business Tax Licenses within thirty (30) days of Conditional Use approval.
5) Limit no more than 2 vehicles.
6) Include the City of Fort Pierce Business Tax License number on all advertising.

ALTERNATIVES:

- Approval with alternative conditions
- Denial

RESPONSIBLE STAFF:
Vennis Gilmore, Planning Analyst

COORDINATED WITH:
Technical Review Committee

Fiscal Impact

OTHER INFORMATION:
Potential increase in Ad-Valorem, Sales Tax, and Tourism Tax Revenue

---

Attachments

Staff Report
Application
Narrative
Aerial Map
Zoning Map
Floor Plan
Rental Agreement
Rules & Regulations
HOA By-laws
Property Record Card
TRC Comments
Public Notice Certifications

Form Review

Inbox	Reviewed By	Date
City Manager	Nick Mimms	02/12/2019 11:18 AM

Form Started By: Vennis Gilmore
Started On: 02/07/2019 01:54 PM
Final Approval Date: 02/12/2019

THE SUNRISE CITY
FORT PIERCE
PLANNING DEPARTMENT Florida

TO: Nicholas Mimms, PE, City Manager

THROUGH: Rebecca Grohall, AICP, Planning Director

FROM: Vennis Gilmore, Planning Analyst

RE: **Application for Conditional Use**
Kimberly Jones Dwelling Rental
355 S. Ocean Drive #601

DATE: February 7, 2019

STAFF REPORT

Owner/Applicant: Kimberly Jones
355 S. Ocean Drive #601
Fort Pierce, FL 34949

Applicant's Request: Approval of a Conditional Use to operate a Dwelling Rental, offering lodging for less than six months. The identified minimum rental period is identified as thirty-one (31) days.

Location(s): 355 S. Ocean Drive #601

Parcel ID: 2401-522-0023-000-7

Current Zoning: Hutchinson Island Medium Density Residential Zone (R4-A)

Future Land Use: Hutchinson Island Residential (HIR)

Surrounding Zoning:

North	East	South	West
R-4A	R-4A	R4-A/C-5	R-4A

Utilities: FPUA

Staff Analysis:

Request
In accordance with Sections 22-22, and 22-76 of the City Code, the applicant is requesting the review and approval of a Conditional Use to operate a Dwelling Rental at 355 S. Ocean Drive #304 to offer lodging of less than six (6) months and a minimum of thirty-one (31) days to guests. The subject property is a part of the Avalon Beach Club Condominiums. The subject condo apartment contains (3) bedrooms and two and a half (2 1/2) bathrooms. The subject condo apartment has two (2) designated and paved parking spaces for the unit. The property is zoned Hutchinson Island Medium Density Residential Zone (R4-A).

The property is located at the northeast corner Hernando Street and Avalon Avenue. The subject site is surrounded by multi-family housing to the north, west, and south, and the Atlantic Ocean to the east.

Dwelling Rentals
Pursuant to City Code Section 22-3. - Definitions—Generally, the rental of any dwelling unit for less than six (6) months, is classified as a "Dwelling rental (dwelling unit)", and defined as follows: One or more rooms connected together in a building, constituting a separate, independent housekeeping establishment, other than a motel/hotel, for purposes of rental on a daily, weekly or longer basis.

The State of Florida provides further classification of a dwelling is rented for periods of less than one (1) month, declaring the use a "Vacation rental", and defined such use as any unit that is also a transient public lodging establishment but that is not a timeshare project, which is rented to guests more than three times in a calendar year for periods of less than 31 days or 1 calendar month, whichever is less, or which is advertised or held out to the public as a place regularly rented to guests. A dwelling rental, as locally defined, is also a Vacation Rental if the duration of stays are less than thirty-one (31) days. The rental of a dwelling for periods at a minimum of thirty-one (31) days, but less than six (6) months is a dwelling rental, but not a Vacation Rental.

Table 1, below, presents general characteristics to clarify Dwelling Rentals, and the transitioning threshold for Vacation Rentals.

Table 1 – Dwelling & Vacation Rental Definitions

	Dwelling Rental	**Vacation Rental**
Length of Stay	Less than 6 months	30 days or less
Lodging Type(s)	Non-Transient (more than 30 days)	Transient Lodging
State License Requirement	If rented 30 days or less (Vacation Rental)	Division of Hotels & Restaurants – Vacation Rental License
Public lodging establishment (ADA & Misc. Regulations)	If rented 30 days or less (Vacation Rental)	Public lodging establishment

Zoning & Land Use
The subject site is located within the Hutchinson Island Medium Density Residential Zone (R4-A) district which is designed to establish height and density regulations for lands located within the city which are situated east of the Indian River. The R-4A zone is compatible with the Medium Density Residential Hutchinson Island designation in the comprehensive plan. Permitted gross residential densities in this district may not generally exceed eight (8) units per acre. Bonus density of up to one additional unit per acre is available as provided for in this section. This district is established because Hutchinson Island is a sensitive barrier island which presents development considerations which are either unique to the area or are of added concern, such as environmental fragility, beach erosion, and hurricane evacuation.

The Hutchinson Island Residential (HlR) designation is intended for parcels that are best suited for residential development on Hutchinson Island. This future land use category allows single-family detached and attached units, duplexes and multifamily residences at densities ranging up to 8 dwelling units per acre. Limited public uses and commercial uses that are compatible with the surrounding development shall also be allowed.

Parking
Pursuant to City Code Section 22-60 (d), b. Motels, hotels and resort hotels shall provide 1.6 spaces for each unit 500 square feet or larger. The subject condo features two (2) parking spaces for the unit.

Conditional Use
The purpose of the conditional use process is to allow, when desirable, uses that would not be appropriate generally or without restriction throughout the particular zoning district, but which, if controlled as to number, area, location or relation to the neighborhood, would not adversely affect the public health, safety, comfort, good order, appearance, convenience and the general welfare. The use as presented features commercial aspects that are not generally appropriate for single-family, low-density environments.

The authorization of a Conditional Use to establish a dwelling rental for periods of less than six (6) months, but greater than thirty-one (31) days would provide an opportunity for consistency with zoning district and land use designation as the use becomes non-transient, minimizing the commercial nature of the use and potential impacts to the surrounding residential neighborhood. The further limitation of other leading effects of the use may provide greater assimilation of the short-term rental within a single-family district.

According to the HOA documents of the Avalon Beach Club; No trade, business, profession or other type of commercial activity may be conducted in any unit. No Unit may be leased more than two (2) times in any twelve (12) month period. There has been three (3) approved conditional use applications for dwelling rentals with the Avalon Beach Club Condominiums as of January 2019.

Technical Review Committee
All affected departments have reviewed the proposed Conditional Use with regards requirements of the City Code. Findings from the review by corresponding departments and the associated responses by the applicant are provided for viewing by the Planning Board.

Property Owner Response Summary:
A total of 82 notifications of the proposal were mailed to the owners of property located within 500 feet of the subject property. An update will be provided to the City Commission at the public hearing.

Planning Board Recommendation:
The Planning Board, at their January 8th, 2019 meeting, voted to recommend **approval** of the request.

Staff Recommendation:
The proposed use presents the provision of limited transient lodging accommodations to the general public, representing a limited commercial use that is compatible with the surrounding neighborhood of this location, and is generally consistent with the City's Land Development Code and Comprehensive Plan with appropriate restriction therefore; Staff recommends the City Commission **approve** the request with the following conditions:

1) The maximum occupancy ensures compliance with City Code Section 8.5-43. - Required space in dwelling units, based upon the size of each unit;
2) Registration of the property manager accessible at all times, to resolve complaints or violations of City Code;
3) Issuance of guide booklets (available from Code Enforcement) for renters regarding local rules and public service resources to minimize conflicts; and
4) The applicant files for and obtains St. Lucie County & City of Fort Pierce Business Tax Licenses within thirty (30) days of Conditional Use approval.
5) Limit no more than 2 vehicles.
6) Include the City of Fort Pierce Business Tax License number on all advertising.

THE SUNRISE CITY
FORT PIERCE
PLANNING DEPARTMENT Florida

Conditional Use – No New Construction

Property address or Location 355 S Ocean Drive Apt 601

Parcel ID #(s) 2401522007300007

Project description Seasonal Rental more than 30 days less than 6 months

Kimberly Jones/Owner/Avalon 601

Property Owner(s)

355 S Ocean Drive Apt 601
Street Address

Fort Pierce, FL 34949
City State Zip

706-830-6999
Phone Number

t.kim30@yahoo.com
Email Address

Applicant/Representative, Title, Company

Street Address

City State Zip

Phone Number

Email Address

Property Owner(s) Acknowledgements: *- This application will not be considered complete without the signature of all property owners of record, which shall serve as an acknowledgement of the submission of this application. The property owner's signature below shall also authorize the Applicant (if other than the property owner) and/or Representative to act in his/her behalf for the purposes of seeking approval for the application described herein.*

Kimberly Jones
Property Owner(s) Signature(s)

STATE OF FLORIDA -- COUNTY

The foregoing instrument was acknowledged before me this 30th day of November, 2018, by Kimberly Dawn Jones ~~who is personally known to me or~~ has produced Driver's Licence as identification.

Signature of Notary

Noemi Rios
NOTARY PUBLIC
STATE OF FLORIDA
Comm# GG127659
Expires 7/24/2021

(seal)

INTAKE MEETINGS ARE REQUIRED FOR ALL SUBMITTALS ***CALL (772) 467-3729***

TO BE COMPLETED BY STAFF

Zoning	Future Land Use	Total Acres	Historic District	Historic Designation
				Contributing Individual Non-Contributing None

Pre-Application Meeting Date_____
Intake Planner_____
Planner Assigned_____
Approved By_____ Date _____
Comments_____

Fees_____ Control #_____ B. Permit #_____

Intake Date Stamp

❑ CONDITIONAL USE: NO NEW CONSTRUCTION

Submit one original, seven (7) hard copies and one (1) CD of the following for initial submittal, subsequent submittals will be required:

- ❑ *If no site improvements are required:*
  - ❑ As-built survey
  - ❑ Floor plan of existing building(s)
- ❑ *If parking and drainage improvements are required:*
  - ❑As-built survey;
  - ❑Site plan, to scale, including existing improvements and proposed parking, driveways, landscaping & storm drainage;
  - ❑Lighting plan
- ❑ Complete, notarized application

Application Type:

- ☒ Conditional Use: No new construction with no site improvements
- ❑ Conditional Use: No new construction with parking and drainage improvements

Site Information:

Building Size_____ Parking Spaces:_____

Surrounding Uses: *(i.e. single family home, retail, industrial, etc.)*

North	South	East	West

The application for conditional use with the application for site plan review, when not exempt in accordance with the requirements of section 22-75, shall be reviewed as a unit in accordance with the requirements of section 22-58 except that:

(1) The city commission shall hold a public hearing in accordance with the provisions of section 22-143 prior to acting on the application for conditional use.

(2) In the event the city planning board disapproved the application for conditional use or in case of a protest against said application signed by twenty (20) per cent of the owners within five hundred (500) feet of the area included in said application, such application shall not be approved except by a four-fifths vote by the city commission.

(3) In permitting a conditional use or the modification of an existing conditional use, the city commission may impose, in addition to those standards and requirements expressly specified in this chapter, any condition which it finds to be necessary to protect the best interest of the surrounding property of the city.

Application Outlook

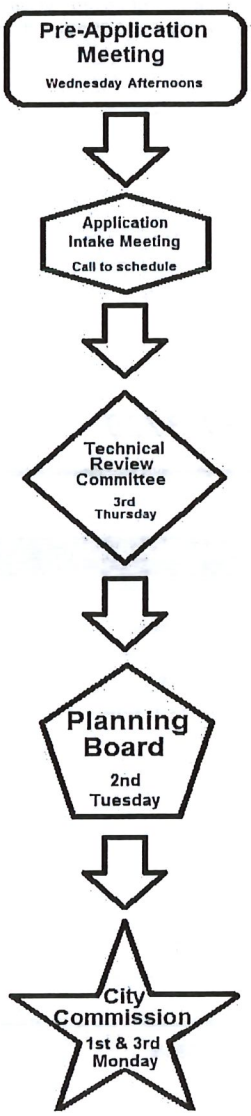

3 December 2018

Fort Pierce Planning Department
100 North US 1
Fort Pierce, FL 34950

Kimberly Jones
355 S Ocean Dr Apt 601
Fort Pierce, FL 34949

RE: Avalon 601 Conditional Use Narrative

It is my plan to do seasonal rental for more than 30 days but less than 6 months starting 1 March 2019 and continuing in perpetuity until such time as we no longer desire to engage in such business. I have obtained the State of Florida tax ID and the St Lucie county TDT number. I appreciate your assistance in this matter.

Respectfully Submitted,

Kimberly Jones



N
W E
S

Kimberly Jones Dwelling Rental

355 S. Ocean Drive #601

Aerial Map

THE SUNRISE CITY
FORT PIERCE
Florida

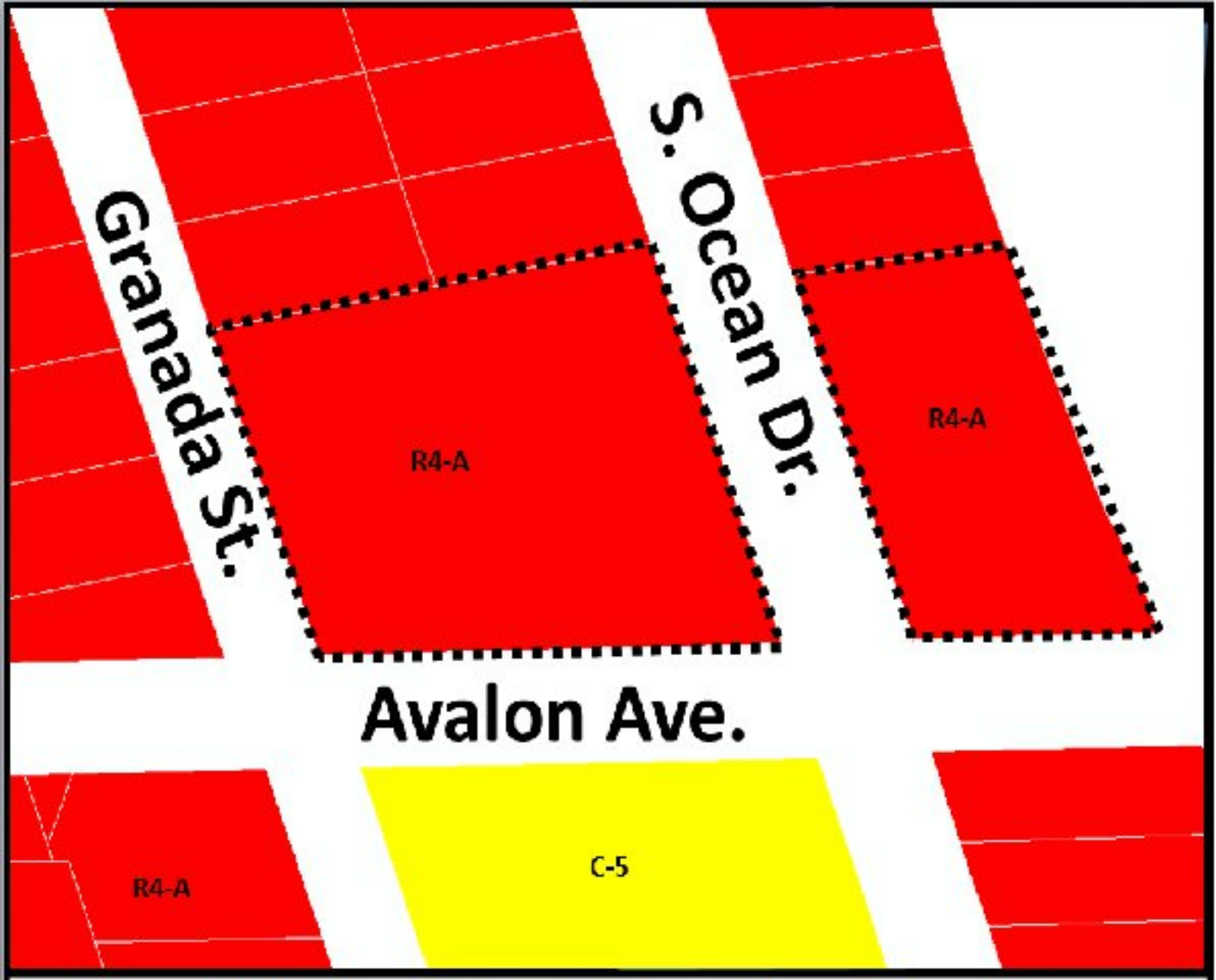

N
W E
S

Kimberly Jones Dwelling Rental

355 S. Ocean Drive #601

THE SUNRISE CITY FORT PIERCE Florida

R4-A = **C-5** =

Zoning Map

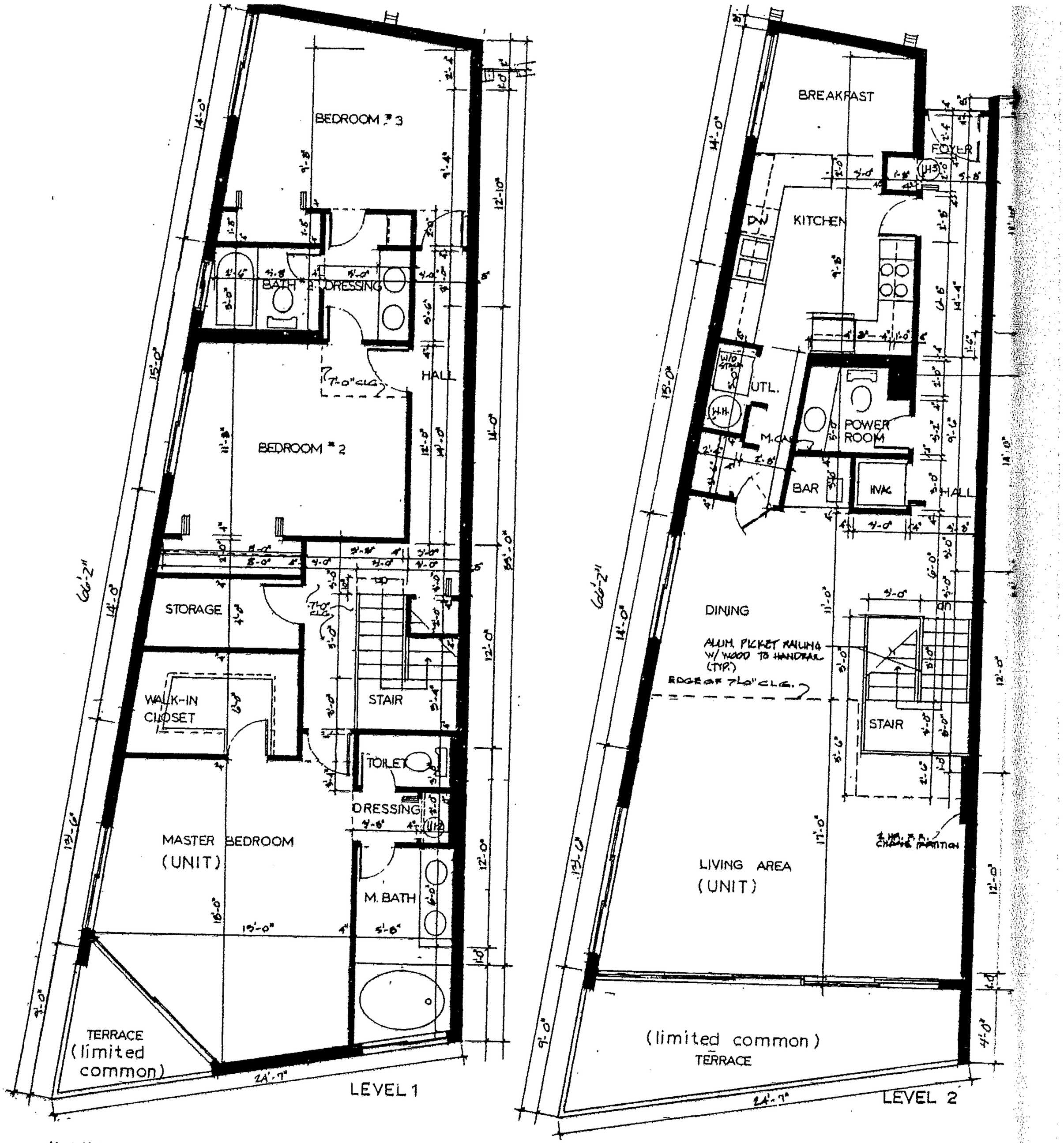

TYPE: "J"

UNIT NO: T401, T601, & P801

EXHIBIT "B" PLOT PLAN SURVEY AND GRAPHIC DESCRIPTION

AVALON BEACH CLUB CONDOMINIUM

PROJECT NO.: 8014

DATE: 6/1/81

REVISED:

SHEET 21 OF 22

0 2.5 5 10 20

Scale in feet

NOTE: Not valid unless seal of surveyor of State of Florida is affected.

RESIDENTIAL LEASE FOR APARTMENT OR UNIT IN MULTI-FAMILY RENTAL HOUSING (OTHER THAN A DUPLEX) INCLUDING A MOBILE HOME, CONDOMINIUM, OR COOPERATIVE (FOR A TERM NOT TO EXCEED ONE YEAR)

(Not To Be Used For Commercial, Agricultural, or Other Residential Property)

WARNING: IT IS VERY IMPORTANT TO READ ALL OF THE LEASE CAREFULLY. THE LEASE IMPOSES IMPORTANT LEGAL OBLIGATIONS.

AN ASTERISK (*) OR A BLANK SPACE (_____) INDICATES A PROVISION WHERE A CHOICE OR A DECISION MUST BE MADE BY THE PARTIES.

NO CHANGES OR ADDITIONS TO THIS FORM MAY BE MADE UNLESS A LAWYER IS CONSULTED.

I. TERM AND PARTIES. This is a lease (the "Lease") for a period of 2 (number) months (the "Lease Term"), beginning February 1, 2019 (month, day, year) and ending March 31, 2019 (month, day, year), between Barbara D Jones, Gregory Jones Kimberly Jones (name of owner of the property) and Daun Franklin Nowak Suzanne Estelle Nowk (name(s) of person(s) to whom the property is leased)

(In the Lease, the owner, whether one or more, of the property is called "Landlord." All persons to whom the property is leased are called "Tenant.")

Landlord's E-mail Address: tklm30@yahoo.com & horizonairllc@yahoo.com
Landlord's Telephone Number: (706) 830-6999
Tenant's E-mail Address: _____
Tenant's Telephone Number: _____

II. PROPERTY RENTED. Landlord leases to Tenant apartment or unit no. T-601 in the building located at 355 S Ocean Drive T-601, Hutchinson Island, FL 34949 (street address) known as AVALON BEACH CLUB (name of apartment or condominium), Fort Pierce (city), Florida 34949 (zip code), together with the following furniture and appliances:

REFRIGERATOR; MIRCOWAVE; STOVE; DISPOSAL; DISHWASHER; WASHER; DRYER; TV

[List all furniture and appliances. If none, write "none."] (In the Lease, the property leased, including furniture and appliances, if any, is called "the Premises.")

III. COMMON AREAS. Landlord grants to Tenant permission to use, during the Lease Term, along with others, the common areas of the building and the development of which the Premises are a part.

IV. RENT PAYMENTS AND CHARGES. Tenant shall pay rent for the Premises in installments of $ 3,500.00 each on the 1ST day of each December [month, week]
(a "Rental Installment Period," as used in the Lease, shall be a month if rent is paid monthly, and a week if rent is paid weekly.)

Tenant shall pay with each rent payment all taxes imposed on the rent by taxing authorities. The amount of taxes payable on the beginning date of the Lease is $ 805.00 for each installment. The amount of each installment of rent plus taxes ("the Lease Payment"), as of the date the Lease begins, is $ 7,805.00. Landlord will notify Tenant if the amount of the tax changes. Tenant shall pay the rent and all other charges required to be paid under the Lease by cash, valid check, or money order. Landlord may appoint an agent to collect the Lease Payment and to perform Landlord's obligations.

Tenant DN (SN) and Landlord ( ) ( ) acknowledge receipt of a copy of this page, which is Page 1 of 18.

Unless this box ☐ is checked, the Lease Payments must be paid in advance beginning _____ December 1, 2018 _____
(date)

If the tenancy starts on a day other than the first day of the month or week as designated above, the rent shall be prorated from

_____ _____ through _____ _____ in the amount of $ _____ and shall be due
(date) (date)

on _____ _____ _____ (If rent paid monthly, prorate on a 30-day month.)
(date)

V. DEPOSITS, ADVANCE RENT, AND LATE CHARGES. In addition to the Lease Payments described above, Tenant shall pay the following: (check only those items that apply)

___X___ a security deposit of $ _____ 1,000.00 to be paid upon signing the Lease.

___X___ advance rent in the amount of $ _____ 8,030.00 for the Rental Installment Periods of December 1, 2018 to be paid upon signing the Lease.

___☐___ a pet deposit in the amount of $ _____ N/A to be paid upon signing the Lease.

___☐___ a late charge in the amount of $ _____ for each Lease Payment made more than _____ days after the date it is due.

___X___ a bad check fee in the amount $ 20.00 (not to exceed $20.00 or 5% of the Lease Payment, whichever is greater) if Tenant makes any Lease Payment with a bad check. If Tenant makes any Lease Payment with a bad check, Landlord can require Tenant to pay all future Lease Payments in cash or by money order.

___X___ Other: $225.00 CLEANING FEE; $125.00 TO AVALON BEACH CLUB HOA

___X___ Other: CANCELLATION NOTICE: TENANTS AGREE TO PROVIDE 30 DAYS OF CANCELLATION NOTICE PRIOR TO START DATE of 2/1/19

VI. SECURITY DEPOSITS AND ADVANCE RENT. If Tenant has paid a security deposit or advance rent the following provisions apply:

A. Landlord shall hold the money in a separate interest-bearing or non-interest bearing account in a Florida banking institution for the benefit of Tenant. If Landlord deposits the money in an interest bearing account, Landlord must pay Tenant interest of at least 75% of the annualized average interest paid by the bank or 5% per year simple interest, whichever Landlord chooses. Landlord cannot mix such money with any other funds of Landlord or pledge, mortgage, or make any other use of such money until the money is actually due to Landlord; or

B. Landlord must post a surety bond in the manner allowed by law. If Landlord posts the bond, Landlord shall pay Tenant 5% interest per year.

At the end of the Lease, Landlord will pay Tenant, or credit against rent, the interest due to Tenant. No interest will be due Tenant if Tenant wrongfully terminates the Lease before the end of the Lease Term.

C. If Landlord rents 5 or more dwelling units, then within 30 days of Tenant's payment of the advance rent or any security deposit, Landlord must notify Tenant in writing of the manner in which Landlord is holding such money, the interest rate, if any, that Tenant will receive, and when such payments will be made.

VII. NOTICES. Mayrobis Solo McCurdy and Company Realty #772 224-5658 is Landlord's Agent. All notices to Landlord and all
(name)

Lease Payments must be sent to Landlord's Agent at _____ Gregory Jones & Kimberly Jones _____
(address)

unless Landlord gives Tenant written notice of a change. Landlord's Agent may perform inspections on behalf of Landlord, subject to Article XII below. All notices to Landlord shall be given by certified mail, return receipt requested, or by hand delivery to Landlord or Landlord's Agent.

Any notice to Tenant shall be given by certified mail, return receipt requested, or delivered to Tenant at the Premises. If Tenant is absent from the Premises, a notice to Tenant may be given by leaving a copy of the notice at the Premises.

VIII. USE OF PREMISES. Tenant shall use the Premises only for residential purposes. Tenant also shall obey, and require anyone on the Premises to obey, all laws and any restrictions that apply to the Premises. Landlord will give Tenant notice of any restrictions that apply to the Premises.

If the Premises are located in a condominium or cooperative development, the Lease and Tenant's rights under it, including as to the common areas, are subject to all terms of the governing documents for the project, including, without limitation, any Declaration or Condominium or proprietary lease, and any restrictions, rules, and regulations now existing or hereafter adopted, amended or repealed.

Tenant [DN, SN] and Landlord [illegible] acknowledge receipt of a copy of this page, which is Page 2 of 13.
RLAHCC-1 Rev. 7/15 Approved [illegible] by the Supreme Court of Florida, for use under rule 10.2 [illegible] Regulating the Florida Bar

AVALON BEACH CLUB CONDOMINIUM ASSOCIATION

RULES AND REGULATIONS

1. Cabana units shall not be used as residential or overnight accommodations, but shall be used solely for recreational purposes, including lounging, showering, changing and storage of beachwear and equipment.

2. Any use, practice or activity that is the source of annoyance to residents or which interferes with the peaceful possession, quiet enjoyment and proper use of the property by the residents is prohibited.

3. All units and property must be kept clean and in a sanitary condition. No rubbish, refuse, garbage or any fire hazard shall be allowed to accumulate. All garbage and trash shall be placed in plastic bags and securely tied before throwing down the trash chute; no trash or refuse shall be left in the trash chute rooms. All refuse and trash, which is to large to be accommodated in the chute, shall be carried down to the ground level and properly disposed of in the trash room.

4. Any trash (as opposed to garbage) such as old furniture, refrigerators, doors, drywall, carpeting, etc. is to be disposed of by the owner/occupant and not via the trash room. Arrangements need to be made by the owner/occupants to haul away the debris on a daily basis at the owner/occupants own cost.

5. Water closets and water apparatus on the condominium property shall not be used for any other purpose than that for which they were constructed. Occupants shall be held liable for any damage inside the unit or common areas occasioned by misuse of water closets or other apparatus.

6. LEASING OF UNITS- See attached regarding the leasing of units.

7. No signs of any kind, specifically including without limitation "For Sale" and "For Rent" signs, shall be permitted on the building, grounds or vehicles.

8. Guest of occupants shall be limited to six (6) in number at any time and must be accompanied by the resident when using the recreational facilities of the property including the beach club, pool, whirlpool and sauna areas or they must display a badge (provided by the Association) which identifies them as guest of unit occupants. A reservation is required for larger groups or to hold a party in the recreation area; present your request to the Board four (4) days in advance for approval.

9. The use of grills and barbecues is restricted to the ocean side beach club area, except for the 1st Floor.

10. Building and grounds maintenance personnel on the premises are assigned specific duties to be performed under supervision of the Management Company. Occupants shall not interrupt or interfere with these personnel in

the performance of their duties. If you have a question related to the building and grounds or other common areas, contact the Management Company.

11. When using the pool, whirlpool and sun deck areas occupants shall, in addition to any posted regulations, observe the following:

    a) Proper attire shall be worn in the lobby/elevator when using pool area; dry thoroughly before entering the lobby/elevator to avoid pooling of water on floors
    b) Pool furniture shall be covered with towels when using suntan lotion.
    c) Sanitation rules shall be scrupulously observed when using the swimming pool, whirlpool or sauna. Shower thoroughly to remove suntan lotion and sand before entering pool. To conserve energy, turn off the sauna and whirlpool immediately when not in use.
    d) Children twelve (12) years of age and under are not allowed in the pool, sauna or whirlpool area without adult supervision.
    e) Children under three (3) years of age must wear properly fitting rubber pants when in the pool.
    f) Pool hours are from 8:00 a.m. to 10:00 p.m.
    g) Pool use is at ones own risk.
    h) Furniture and equipment may not be removed from the pool area.
    i) In the event that any child has a bowel movement in the pool, the parent, guardian and unit owner will be held responsible for all cost incurred due to this act, such costs include, but are not limited to, chemicals, cleaning, labor and refilling the pool.
    j) Pets are not permitted in the pool or pool area.
    k) Boisterous conduct, loud games, or other annoying activities are not permitted in the pool area.
    l) Persons with infections or contagious health conditions must not use the pool.
    m) Glass items are not permitted in the swimming area at any time.
    n) Sauna use is limited to thirty (30) minutes.
    o) All persons must read posted instructions before using the sauna.
    p) The facility must be left in a clean condition. The sauna and the light should be turned off when leaving.

12. Parking rules:

    a) Occupants shall park only in the numbered space assigned to their unit as designated in the documents.
    b) Guest parking shall be restricted to the area designated by the Association.
    c) Trucks, pick-ups, trailers, boat trailers, motor homes and other recreational vehicles, motorcycles, commercial vehicles and vehicles other than passenger cars are prohibited.
    d) Short wheel base station wagon or suburban type vans (all glass windows) may be approved by the Board; panel or RV type vans are not authorized.
    e) Pick-up trucks are permitted to park during daylight hours, after sunset they

will be tagged with a warning. If parked a second time after sunset they will be towed at owners expense.

f) Occupants are responsible for their guest's observances of parking regulations.
g) Unauthorized or improperly parked vehicles are subject, at the discretion of the Board, to being towed from the premises at the expense of the owner.
h) If an occupant has more than one (1) vehicle, they must obtain written permission from the board.
i) If an occupant wants to allow another occupant to park in his assigned space in his absence, written authorization must be provided to the Board.
j) Parking in handicapped spaces is for handicapped visitors only.

13. Car washing is permitted only in the designated car wash area.

14. Any person occupying a unit for more than thirty (30) days shall no longer be termed a guest, but becomes an occupant.

15. All owners must leave a key to their unit in the maintenance office for emergency maintenance problems. The Association has the irrevocable right of access to each unit during reasonable hours, when necessary for the maintenance, repair or replacement of any common elements or for making emergency repairs which are necessary to prevent damage to the common elements or to another unit or units. Emergency keys will not be released to anyone, including realtors, contractors or service personnel. Unit owners will have to make other arrangements for providing access keys.

16. Bathing suits, clothing of any kind, rugs, towels or any other articles shall not be draped over railings, walkways, windows, balconies or facades.

17. Clotheslines may not be hung on the building.

18. Bicycles, furniture, fishing rods, rafts or any personal property of any kind shall not be left on the walkways or in any common areas. <u>All</u> personal property shall be kept <u>within</u> the apartment.

19. Any personal property left in the common pool area will be removed by management and if left unclaimed for thirty (30) days, will be disposed of.

20. Tossing cigarette or cigar butts, bird feed, trash, or discards of any sort from or on balconies, walkways, stairs or any common area is prohibited.

21. Walkways and stairs must be kept free of furniture or any type of obstruction.

22. No one shall be permitted to play or loiter in hallways, stairwells, elevators, roof, walkways, driveways or parking areas: This includes skateboarding, roller skating, bike riding and any other activities.

23. Ball playing is not permitted in any common area.

24. Children must be supervised at all times.

25. Shopping carts will be returned to designated area immediately after use and chain must be fastened per FIRE CODE regulation

26. No common areas shall be decorated or furnished by an individual owner or group of owners in any manner, except with prior approval by the Board.

27. No door to door solicitations shall be permitted.

28. It is the responsibility of the parent and/or guardian of each child to show proof of age to management, if so requested.

29. Smoking on elevators, stairwells or catwalks is prohibited.

30. Shutters may not be installed without Board approval.

31. Prior to installing tile (3rd Floor and above) owner/occupant must first install a sound proof material, such as corkboard.

AVALON BEACH CLUB CONDOMINIUM ASSOCIATION

LEASING OF UNITS

1. An Applicant must request the Board of Directors of the Avalon Beach Club Condominium Association, Inc. to approve the lease. In consideration of the Board's review and consideration of this application, the applicant agrees to abide by and comply with the following terms of this application, whether or not this applications approved by the Board, and to hold harmless the Board of Directors, it's officers and agents, and all other persons furnishing or receiving information in connection with this application.

2. An Application, completely filled out and duly executed, together with an original counterpart of the Lease, duly executed by all parties and properly witnessed, shall be submitted to the Board. Should the parties elect to utilize a lease form other than that approved by the Board, said lease shall include and incorporate by reference the terms and provisions of the Association lease form, specifically including paragraphs 1 through 16 thereof. The application review process normally requires a minimum of ten (10) days, and includes a personal interview of the applicant (accompanied solely by proposed occupants) by the Orientation committee of the Association. ANY UNAPPROVED LEASE OR OCCUPANCY SHALL BE INVALID.

3. An Applicant, desiring to be approved by the Board as Lessee of a condominium unit, does hereby acknowledge that, if approved, said apartment shall be occupied subject to all the terms, provisions and conditions of the Declaration of Condominium of the Avalon Beach Club and exhibits and amendments thereto, and to the Rules and Regulations presently in force or as hereinafter amended. A copy of the Rules and Regulations, which have been approve by the Board of Directors, are attached to this application. Failure to comply with said Rules and Regulations shall constitute a default hereunder resulting in a termination of the lease in accordance with the provisions of Paragraph 5 below. The applicant further agrees, that in the event the Association shall deem it necessary to retain counsel to initiate legal proceedings for the purpose of enforcing any of the aforesaid documents as to the applicant, the Association shall be entitled to recover in such event and in such action its costs and reasonable attorney's fees incurred, in addition to any other relief or damages to which the Association may be entitled. With respect to the aforesaid Rules and Regulations, the applicant specifically represents to be particularly familiar with the following limitations hereunder:

   a. That sub-leasing, letting or occupancy of the premises in lessees absence is prohibited.

   b. That lessee must be present when any guests, visitors or children

(who are not permanent residents) occupy the apartment or club facilities.

c. That only one (1) passenger car is permitted to be kept on the Premises of the Association, except with the written consent of the Board. Subject to the provisions of the Rules and Regulations, vans, trailers, boat trailers, motor homes, motorcycles, trucks, commercial vehicles and vehicles other than passenger cars are prohibited, *See parking rules for further explanation.*

4. The applicant agrees that any acts or omissions on the applicant's part which constitutes grounds for the termination of a lease and eviction from the premises under the laws of the State of Florida, St. Lucie County or the City of Fort Pierce, shall constitute a default hereunder resulting in the termination of the lease in accordance with the provisions of Paragraph 5 below.

5. In the event this application and the attached lease are approved by the Board and the applicant becomes a lessee, applicant hereunder, as lessee under the attached lease, hereby covenants and agrees that in the event of a default on the part of the applicant, then lessee, with the respect to the terms and conditions of the attached lease or with respect to the terms and conditions of this Application, including without limitation the defaults defined in Paragraph 2,3 and 4 above, that the board, as agent for the owner of the Unit, as provided in the Declaration of Condominium, shall have the absolute and unqualified right in the exercise of its sole discretion, to terminate the lease and the right to evict applicant, then Lessee, from the premises and to re-enter the same forthwith, and applicant, then Lessee, hereby waives any and all defenses to such eviction and re-entry and agrees to hold the Association, its Board and their designees free and harmless from any and all injury or damage, if any, sustained or claimed to have been sustained by Applicant, then Lessee, arising or occurring in any way or manner whatsoever by reason of said termination of the lease, the eviction and/or re-entry, including without limitation of the foregoing the cost of moving expenses; temporary living quarters and any and all other costs and expenses related thereto.

6. The lease must be re-approved at the original expiration date and will not automatically be approved for any additional term without Board approval.

Exhibit F to Declaration Establishing
AVALON BEACH CLUB, A CONDOMINIUM

BYLAWS OF
AVALON BEACH CLUB CONDOMINIUM ASSOCIATION, INC.

1. IDENTITY

These are the Bylaws of Avalon Beach Club Condominium Association, Inc., (the "Association"), a corporation not for profit, under the laws of the State of Florida organized for the purpose of administering that certain condominium located in St. Lucie County, Florida, and known as "AVALON BEACH CLUB, A CONDOMINIUM" (the "Condominium").

1.1 Principal Office - The principal office of the Association shall be 1521 Alton Road, Miami Beach, Florida, or at such other place as may be subsequently designated by the Board of Directors. All books and records of the Association shall be kept at its principal office.

1.2 Fiscal Year - The fiscal year of the Association shall be the calendar year.

1.3 Seal - The seal of the Association shall bear the name of the corporation, the word "Florida", the words, "Corporation Not For Profit", and the year of incorporation.

2. DEFINITIONS

For convenience, these Bylaws shall be referred to as the "Bylaws" and the Articles of Incorporation of the Association as the "Articles". The other terms used in these Bylaws shall have the same definitions and meaning as those set forth in the Declaration of the Condominium, unless herein provided to the contrary, or unless the context otherwise requires.

3. MEMBERS

3.1 Annual Meeting - The annual members meeting shall be held on the date, at the place, and at the time, as determined by the Board of Directors, from time to time, provided that there shall be an annual meeting every calendar year and no later than thirteen (13) months after the last preceding annual meeting. The purpose of the meeting shall be to elect Directors and to transact any other business authorized to be transacted by the members.

3.2 Special Meetings - Special members' meetings (except for a special meeting called for the purpose of recalling a member of the Board of Directors which

may be called by Ten (10%) Percent of the members of the Association), shall be held at such place as provided for annual meetings and may be called by the President or by a majority of the Board of Directors of the Association, and must be called by the President or Secretary and upon receipt of a written request from a majority of the members of the Association. The business conducted at a special meeting shall be limited to that stated in the notice of the meeting.

3.3 Notice of Meeting - At least fourteen (14) days prior to the annual meeting, written notice shall be served upon or mailed via certified mail (unless Unit Owner waives in writing the right to receive notice by mail) to each member entitled to vote thereat, at such address as appears on the books of the Corporation. Notice of the annual meeting shall be posted at a conspicuous place on the Condominium property at least fourteen (14) days prior to said meeting. Unit Owners may waive notice of specific meetings and may take action by written agreement without meetings, if allowed by the By-Laws, the Declaration of Condominium, or any Florida Statute.

3.4 Quorum - A quorum at members meetings shall consist of persons entitled to cast (either personally or by proxy) a majority of the votes of the entire membership.

3.5 Voting -

(a) Number of Votes - In any meeting of members, the Owners of Condominium Units, as defined by the Declaration of Condominium shall be entitled to cast one vote for each Unit owned. The vote of a Unit shall not be divisible.

(b) Majority Vote - The acts approved by a majority of the votes present in person or by proxy at a meeting at which a quorum shall be present shall be binding upon all Unit Owners for all purposes except where otherwise provided by law, the Declaration, the Articles of Incorporation or these Bylaws. As used in these Bylaws, the Articles of Incorporation or the Declaration, the term "Majority of the Members" shall mean those Unit Owners having more than Fifty (50%) percent of the total authorized votes of all Unit Owners at which a quorum shall be present.

(c) Voting Member - If a Unit is owned by one person, his right to vote shall be established by the roster of members. If a Unit is owned by more than one person, or is under lease, the person entitled to cast the vote for the Unit shall be designated by a certificate signed by all of the record Owners of the Unit according to the roster of Unit Owners and filed with the Secretary of the Association. If a Unit is owned by a corporation, the person entitled to cast the vote for the Unit shall be designated by a certificate signed by the President or Vice President and attested by the secretary or Assistant Secretary of the corporation and filed with the Secretary of the Association. Those certificates shall be valid until revoked or until superseded by a subsequent certificate or until a change in the ownership of the Unit concerned. A certificate designating the person entitled to cast the vote for a Unit may be revoked by any Owner of a share in the Unit. If a certificate designating the person entitled to cast the vote for a Unit is not on file, the vote of the Owners shall not be considered in determining whether a quorum is present nor for any other purpose, except if the Unit is owned jointly by a husband and wife, they may, without being required to do so, designate a voting member in the manner provided above. In the event a husband and wife do not designate a voting member, the following provisions shall apply:

(i) If both are present at a meeting and are unable to concur in their decision upon any subject requiring a vote they shall lose their right to vote on that subject at that meeting, and their vote shall not be considered in determining whether a quorum is present on that subject at the meeting.

(ii) If only one is present at a meeting, the person present shall be counted for purposes of a quorum and may cast the Unit vote, just as though he or she owned the Unit individually, and without establishing the concurrence of the absent person.

(iii) If both are present at a meeting and concur, either one may cast the unit vote.

3.6 Proxies - Votes may be cast in person or by proxy. A proxy

OR BOOK 390 PAGE 2499

may be made by any person entitled to vote and shall be valid only for the particular meeting designated in the proxy. A proxy must be filed in writing, signed by the voting member generating the proxy and filed with the Secretary before the appointed time of the meeting, or before the time to which the meeting is adjourned.

3.7 Adjourned Meetings - If any meeting of members cannot be organized because a quorum has not attended, the members who are present, either in person or by proxy, may adjourn the meeting from time to time until a quorum is present, provided notice of the adjourned meeting is given in the manner required for notice of a meeting.

3.8 Order of Business - The order of business at annual members' meetings and as far as practical at other members' meetings shall be:

(a) Call to order by President;

(b) Election of chairman of the meeting;

(c) Calling of the roll and certifying of proxies;

(d) Proof of notice of the meeting or waiver of notice;

(e) Reading and disposal of any unapproved minutes;

(f) Reports of officers;

(g) Reports of committees;

(h) Appointment of inspectors of election;

(i) Determination of number of Directors;

(j) Election of Directors;

(k) Unfinished business;

(l) New business;

(m) Adjournment.

3.9 Minutes of Meeting - The minutes of all meetings of Unit Owners shall be kept in a book available for inspection by Unit Owners or their authorized representative and Board members at any reasonable time. The Association shall retain these minutes for a period of not less than seven (7) years.

OR BOOK 390 PAGE 2500

4. DIRECTORS

4.1 Membership - The affairs of the Association shall be managed by a Board of not less than two (2) nor more than nine (9) Directors, the exact number to be determined from time to time upon majority vote of the membership. All Directors shall be Unit Owners or spouses of Unit Owners, or mortgagees of Units or a spouse of an individual mortgagee or, in the case of partnership Unit Owners or mortgagees, shall be members or employees (or their spouses) of such partnerships, or in the case of fiduciary Unit Owners or mortgagees, shall be the fiduciaries or their beneficiaries (or their Spouses) of a corporate fiduciary, or partners or employees (or their spouses) of a corporate fiduciary, or partners or employees (or their spouses) of a partnership fiduciary. Cabana Unit Owners may not be directors unless they also own a residential Condominium Unit. No Director shall continue to serve on the Board after he ceases to be a Unit Owner or an interested party in a Unit Owner as specified in the preceding sentence. The above provisions of this Subdivision 4.1 shall not apply to Directors elected by the Developer in accordance with Subdivision 4.15 hereof.

4.2 Election of Directors - Election of Directors shall be conducted in the following manner:

(a) Election of Directors shall be held at the annual members' meeting.

(b) A nominating committee of three (3) members shall be appointed by the Board of Directors not less than thirty (30) days prior to the annual members' meeting. At a meeting of Unit Owners called for that purpose not less than thirty (30) days prior to the annual meeting, the committee shall nominate one (1) person for each Director then serving. Nominations shall be made from the floor.

(c) The election shall be by ballot (unless dispensed by unanimous consent) and by a plurality of the votes cast, each person voting being entitled to cast his votes for each of as many nominees as there are vacancies no cumulative voting.

(d) Except as to vacancies resulting from removal of Directors by members, vacancies in the Board of Directors occurring between annual meetings of members shall be filled by the remaining Directors.

OR BOOK 390 PAGE 2501

(e) Any Director may be removed by concurrence of a majority of the membership at a special meeting of the members called for that purpose. The vacancy in the Board of Directors so created shall be filled by the members of the Association at the same meeting.

(f) Provided, however, that until a majority of the Directors are elected by the members other than the Developer of the Condominium, neither the first Directors of the Association nor any Director named by the Developer shall be subject to removal by members other than the Developer, but may be removed by the Developer.

4.3 Term - The term of each Director's service shall extend until the next annual meeting of the members and subsequently until his successor is duly elected and qualified or until he is removed in the manner elsewhere provided.

4.4 Organizational Meeting - The organizational meeting of a newly elected Board of Directors shall be held within ten (10) days of their election at such place and time as shall be fixed by the Directors at the meeting at which they were elected. Notice of this meeting shall be given to all Unit Owners in the same manner as for regular meetings of the Board of Directors.

4.5 Regular Meetings - Regular meetings of the Board of Directors may be held at such time and place as shall be determined, from time to time, by a majority of the Directors. Notice of regular meetings shall be given to each Director, personally or by mail, telephone or telegraph, and shall be transmitted at least three (3) days prior to the meeting. Regular meetings of the Board of Directors shall be open to all Unit Owners and notice of such meetings shall be posted conspicuously at the Condominium property forty-eight (48) hours in advance for the attention of the members of the Association except in the event of emergency.

4.6 Special Meetings - Special meetings of the Directors may be called by the President or Secretary at the written request of one-third (1/3) of the Directors. Notice of the meeting shall be given personally or by mail, telephone or telegraph, which notice shall state the time, place and purpose of the meeting, and shall be transmitted not less than three (3) days prior to the meeting. Special meetings of the Board of Directors shall be open to all Unit

Owners and notice of a special meeting shall be posted conspicuously at the Condominium property forty-eight (48) hours in advance for the attention of the members of the Association except in the event of an emergency.

4.7 Waiver of Notice - Any Director may waive notice of a meeting before or after the meeting and that waiver shall be deemed equivalent to the giving of notice. Attendance by a Director at a meeting shall constitute a waiver of notice of such meeting, except when his attendance is for the express purpose of objecting at the beginning of the meeting to the transaction of business because the meeting is not lawfully called.

4.8 Quorum - A quorum at Directors' meeting shall consist of a majority of the entire Board of Directors. The acts approved by a majority of those present at a meeting at which a quorum is present shall constitute the acts of the Board of Directors, except when approval by a greater number of Directors is required by the Declaration, the Articles or these Bylaws.

4.9 Adjourned Meetings - If at any meeting of the Board of Directors there be less than a quorum present, the majority of those present may adjourn the meeting from time to time until a quorum is present.

4.10 Presiding Officer - The presiding officer of the Directors' meetings shall be the Chairman of the Board if such an officer has been elected; and if none, the President shall preside. In the absence of the presiding officer, the Directors present shall designate one of their number to preside.

4.11 Order of Business - The order of business at Directors' meetings shall be:

(a) Calling of roll;

(b) Proof of due notice of Meeting;

(c) Reading and disposal of any unapproved minutes;

(d) Reports of officers and committees;

(e) Election of officers;

(f) Unfinished business;

(g) New business;

(h) Adjournment.

OR BOOK 390 PAGE 2503

4.12 Minutes of Meetings - The minutes of all meetings of the Board of Directors shall be kept in a book available for inspection by Unit Owners, or their authorized representatives and Board members at any reasonable time. The association shall retain these minutes for a period of not less than seven (7) years.

4.13 Executive Committee - The Board of Directors may, by resolution duly adopted, appoint an Executive Committee to consist of three (3) or more members of the Board of Directors. Such Executive Committee shall have and may exercise all of the powers of the Board of Directors in management of the business and affairs of the Condominium during the intervals between the meetings of the Board of Directors insofar as may be permitted by law, except that the Executive Committee shall not have power to: (a) determine the common expenses required for the affairs of the Condominium; (b) determine the assessments payable by the Unit Owners to meet the common expenses of the Condominium; (c) adopt or amend the rules and regulations covering the details for the operation and use of the condominium property; or (d) exercise any of the powers set forth in Subdivision (g) and (p) of Section 5 below.

4.14 Proviso - Notwithstanding anything to the contrary contained in this Section 4, the Board shall consist of three (3) Directors during the period that the Developer is entitled to appoint a majority of the Directors, as hereinafter provided. The Developer shall have the right to appoint the [illegible] of the Board of Directors until Unit Owners other than the Developer own Fifteen (15%) Percent or more of the Units that will be operated ultimately by the Association, at which time the Unit Owners other than the Developer shall be entitled to elect not less than one-third (1/3) of the members of the Board of Directors. Unit Owners other than the Developer are entitled to elect not less than a majority of the members of the Board of Directors: (a) three years after Fifty (50%) Percent of the Units that will be operated ultimately by the Association have been conveyed to purchasers; (b) three months after Ninety (90%) Percent of the Units that will be operated ultimately by the Association have been completed, some of them have been conveyed to purchasers, and none of the others are being offered for sale by the Developer in the ordinary course of business; (d) when some of the Units have been conveyed to purchasers, and

none of the others are being constructed or offered for sale by the Developer in the ordinary course of business, whichever occurs first; or (e) at such earlier time as the Developer may choose. The Developer is entitled to elect at least one (1) member of the Board of Directors as long as the Developer holds for sale in the ordinary course of business any Unit operated by the Association. Within sixty (60) days after the Unit Owners other than the Developer are entitled to elect a member or members of the Board of Directors the Association shall call, and give no less than thirty (30) days' nor more than forty (40) days' notice of a meeting of the Unit Owners to elect the members of the Board of Directors the meeting may be called and the notice given by any Unit Owner if the Association fails to do so. Directors appointed by the Developer need not be Unit Owners.

5. POWERS AND DUTIES

The Board of Directors shall have the powers and duties necessary for the administration of the affairs of the Condominium and may do all such acts except such acts which by law, the Declaration or these Bylaws may not be delegated to the Board of Directors by the Unit Owners. Such powers and duties of the Board of Directors shall include, without limitation (except as limited elsewhere herein)the following:

(a) Operation, care, upkeep and maintenance of the common elements.

(b) Determination of the expenses required for the operation of the Condominium and the Association.

(c) Collection of the assessments for common expenses from Unit Owners required to pay same.

(d) Employment and dismissal of the personnel necessary for the maintenance and operation of the common elements.

(e) Adoption and amendment of the Rules and Regulations covering the details of the operation and use of the condominium property, subject to a right of the Unit Owners to overrule the Board as provided in Section 12, hereof.

(f) Maintaining bank accounts on behalf of the Association and designating the signatories required therefor.

(g) Purchasing, leasing or otherwise acquiring Units

OR BOOK 390 PAGE 2505

in the name of the Association, or its designee.

(h) Purchasing Units at foreclosure or other judicial sales, in the name of the Association, or its designee.

(i) Selling, leasing, mortgaging, or otherwise dealing with Units acquired by, and subleasing Units leased by, the Association, or its designee.

(j) Organizing corporations to act as designees of the Association in acquiring title to or leasing Units by the Association.

(k) Obtaining and reviewing insurance for the condominium property.

(l) Making repairs, additions and improvements to, or alterations of, the condominium property in accordance with the provisions of the Declaration after damage or destruction by fire or other casualty or as a result of condemnation or eminent domain proceedings.

(m) Enforcing obligations of the Unit Owners, allocating profits and expenses and doing anything and everything else necessary and proper for the sound management of the Condominium.

(n) Levying fines against the Unit Owners for violations of the rules and regulations established by it to govern the conduct of the Unit Owners.

(o) Purchasing or leasing a Unit for use by a resident superintendent.

(p) Borrowing money on behalf of the Association when required in connection with the operation, care, upkeep, and maintenance of the common elements; provided, however, that: (i) the consent of the Owners of at least two-thirds (2/3) of the Units, obtained at a meeting duly called and held for such purpose in accordance with the provisions of these Bylaws, shall be required for the borrowing of any sum in excess of Five Thousand ($5,000.00) Dollars; (ii) no lien to secure repayment of any sum borrowed may be created on any Unit without the consent of the Owner of such Unit. If any sum borrowed by the Board of Directors on behalf of the Association pursuant to authority contained in this Subparagraph (p) is not repaid by

the Association, a Unit Owner, who pays the creditor such proportion thereof as his interest in the common elements shall be entitled to obtain from the creditor a release of any judgment or other lien which said creditor shall have filed or shall have the right to file against the Unit Owner's Units.

(q) Contract for the management of the Condominium and to delegate to such contractor such powers and duties of the Board of Directors as the Board may deem appropriate in the circumstances, except those which may be required by the Declaration and these Bylaws to have approval of the Board of Directors or other Unit Owners; to contract for the management or operation of portions of the Condominium property susceptible to separate management or operation thereof; and to grant concessions for the purpose of providing services to the Unit Owners.

(r) To authorize Unit Owners or others to use portions of the common elements such as social rooms, meeting rooms, pool terraces, etc., for private parties and gatherings and the right to impose reasonable charges in connection with such private uses.

(s) To exercise all powers specifically set forth in the Declaration, the Articles of the Association, these Bylaws and in the Florida Condominium Act, and all powers incidental thereto.

(t) To suspend the right of any Unit Owner to use the recreation facilities of the Condominium so long as said Unit Owner is delinquent in the payment of common expenses.

(u) To impose a lawful fee in connection with the approval of the transfer, lease, sale or sublease of Units.

6. OFFICERS

6.1 Executive Officers - The executive officers of the Association shall be a President, who shall be a Director, a Vice President, who shall be a Director, a Treasurer, a Secretary and an Assistant Secretary, all of whom shall be elected mutually by the Board of Directors and who may be preemptorily removed at any meeting by concurrence of a majority of all of the Directors. A person may hold more than one office except that the President may not also be the Secretary or Assistant Secretary. No person shall

OR BOOK 390 PAGE 2507

sign an instrument nor perform an act in the capacity of more than one office. The Board of Directors from time to time shall elect such other officers and designate their powers and duties as the Board shall find to be required to manage the affairs of the Association.

6.2 President - The President shall be the chief executive officer of the Association. He shall have all of the powers and duties that are usually vested in the office of president of an association, including but not limited to the power to appoint committees from among the members from time to time to assist in the conduct of the affairs of the Association as he in his discretion may determine appropriate.

6.3 Vice President - The Vice President shall exercise the powers and perform the duties of the President in the absence or disability of the President. He also shall assist the President and exercise such other powers and perform such other duties as shall be prescribed by the Directors.

6.4 Secretary - The Secretary shall keep the minutes of all proceedings of the Directors and the members. He shall attend to the serving of all notices to the members and Directors and other notices required by law. He shall have custody of the seal of the Association and shall affix it to instruments requiring the seal when duly signed. He shall keep the records of the Association, except those of the Treasurer, and shall perform all other duties incident to the office of the Secretary of an association and as may be required by the Directors or the President.

6.5 Assistant Secretary - The Assistant Secretary shall exercise the powers and perform the duties of the Secretary in the absence or disability of the Secretary.

6.6 Treasurer - The Treasurer shall have custody of all property of the Association, including funds, securities and evidences of indebtedness. He shall keep books of account for the Association in accordance with good accounting practices, which together with substantiating papers, shall be made available to the Board of Directors for examination at reasonable times. He shall submit a treasurer's report to the Board of

OR BOOK 390 PAGE 2508

Directors at reasonable intervals and shall perform all other duties incident to the office of treasurer. All monies and other valuable effects shall be kept for the benefit of the Association in such depositories as may be designated by a majority of the Board of Directors.

7. COMPENSATION

Neither Directors nor officers shall receive compensation for their services as such, but this provision shall not preclude the Board of Directors from employing a Director or officer as an employee of the Association nor preclude the contracting with a Director or officer for the management of the Condominium or for any other service to be supplied by such Director or officer.

8. RESIGNATIONS

Any Director or officer may resign his post at any time by written resignation, delivered to the President or Secretary, which shall take effect upon its receipt unless a later date is specified in the resignation, in which event the resignation shall be effective from such date. The acceptance of a resignation shall not be required to make it effective.

9. FISCAL MANAGEMENT

The provisions for fiscal management of the Association set forth in the Declaration and Articles shall be supplemented by the following provisions:

9.1 Budget -

(a) Adoption by Board - The Board of Directors shall from time to time, and at least annually, prepare a budget for the Condominium, determine the amount of assessments payable by the Unit Owners to meet the expenses of the Condominium and allocate and assess such expenses among the Unit Owners in accordance with the provisions of the Declaration. The adoption of a budget for the Condominium shall comply with the requirements hereinafter set forth:

(i) Notice of Meeting - A copy of the proposed budget of common expenses shall be mailed to each Unit Owner not less than thirty (30) days prior to the meeting of the Board of Directors at which the budget will be considered together with a notice of that meeting indicating the time and place of such meeting. The meeting shall be open to the Unit Owners.

(ii) Special Membership Meeting - If a budget is adopted by the Board of Directors which

requires assessment against the Unit Owners in any year exceeding One Hundred Fifteen (115%) Percent of such assessments for the preceding year, as hereinafter defined, upon written application of Ten (10%) Percent of the Unit Owners, a special meeting of the Unit Owners shall be held within thirty (30) days of delivery of such application to the Board of Directors or any member thereof. Each Unit Owner shall be given at least ten (10) days written notice of said meeting. At the special meeting, Unit Owners shall consider and adopt a budget. The adoption of said budget shall require a vote of Owners of not less than Sixty-Six and Two-Thirds (66 2/3%) Percent of all the Units; provided, however, that during the period that the Developer is entitled to elect a majority of the Board of Directors, any revision by the Unit Owners of the budget shall require a vote of Owners of not less than Eighty (80%) Percent of all the Units.

(iii) Approval by Membership - The Board of Directors may propose a budget to the Unit Owners at a meeting of the members or by writing and if such budget or proposed budget be approved by a majority of the Unit Owners at the meeting, or by majority of all Unit Owners in writing, the budget shall be adopted.

(iv) Determination of Budget Amount - In determining whether a budget requires assessment against Unit Owners in any year exceeding One Hundred Fifteen (115%) Percent of monthly installment to be paid on the first day of the month, commencing the first day of the next ensuing month.

9.3 Assessments for Charges - Charges by the Association against members for other than common expenses shall be payable in advance. These charges may be collected by assessment in the same manner as common expenses. Charges for other than common expenses may be made only after approval of a member or when expressly provided for in the Declaration or the Exhibits annexed thereto as the same may be amended from time to time, which charges may include without limitation charges for the use of the Condominium property or Recreation

Area, maintenance services furnished at the expense of a member and other services furnished for the benefit of a member.

9.4 Assessments for Emergencies - Assessments for common expenses of emergencies that cannot be paid from the annual assessments for common expenses shall be due only after thirty (30) days' notice is given to the Unit Owners concerned and shall be paid in such manner as the Board of Directors of the Association may require in the notice of assessment.

9.5 Depository - The depository of the Association shall be such bank or banks in the county, as shall be designated from time to time by the Directors and in which the monies of the Association shall be deposited. Withdrawal of monies from those accounts shall be only by checks signed by such persons as are authorized by the Directors. All sums collected by the Association from assessments may be commingled in a single fund or divided into more than one fund, as determined by a majority of the Board of Directors.

9.6 Acceleration of Assessment Installments Upon Default - If a Unit Owner shall be in default in the payment of an installment upon an assessment, the Board of Directors may accelerate the remaining installments of the assessment upon notice to the Unit Owners, and the then unpaid balance of the assessment shall be due upon the date stated in the notice, but not less than five (5) days after delivery of the notice to the Unit Owner, or not less than ten (10) days after the mailing of such notice to him by registered or certified mail, whichever shall first occur.

9.7 Fidelity Bonds - Fidelity bonds may be required by the Board of Directors for all persons handling or responsible for Association funds in such amount as shall be determined by a majority of the Board. The premiums on such bonds shall be paid by the Association.

9.8 Audit - An audit of the accounts of the Association may be made from time to time as directed by the Board of Directors. A copy of any audit report received as a result of an audit shall be furnished each member of the Association not less than thirty (30) days after its receipt by the Board.

9.9 Accounting Records and Reports - The Association shall maintain accounting records in the County, according to good accounting practices. The records shall be open to inspection by Unit Owners or their authorized representatives at reasonable times and written summaries

OR BOOK 390 PAGE 2511

of them shall be supplied at least annually. The records shall include, but not be limited to: (a) a record of all receipts and expenditures; and (b) an account for each Unit designating the name and correct mailing address of the Unit Owner, the amount of each assessment, the dates and amounts in which the assessments come due, the amount paid upon the account, and the balance due.

9.10 Application of Payment - All assessment payments by a Unit Owner shall be applied as provided herein and in the Declaration.

10. ROSTER OF UNIT OWNERS AND MORTGAGEES

Each Unit Owner shall file with the Association a copy of the deed or other document showing his ownership. The Association shall maintain such information in a booklet entitled "Owners of Units". A Unit Owner who mortgages his Unit shall notify the Association of the name and address of his mortgagee and shall file a copy of the note and mortgage with the Association. A Unit Owner who satisfies a mortgage covering a Unit shall also notify the Association thereof and shall file a copy of the satisfaction of mortgage with the Association. The Association shall maintain such information in a booklet entitled "Mortgagees of Units".

11. PARLIAMENTARY RULES

Roberts' Rules of Order (latest edition) shall govern the conduct of the Association meetings when not in conflict with the Declaration, the Articles or these Bylaws.

12. AMENDMENTS

Except as elsewhere provided otherwise, these Bylaws may be amended in the following manner:

12.1 Notice - Notice of the subject matter of a proposed amendment shall be included in the notice of any meeting at which a proposed amendment is to be considered.

12.2 Adoption - A resolution for the adoption of a proposed amendment may be proposed either by a majority of the Board of Directors or by not less than one-third (1/3) of the members of the Association. Directors and members not present in person or by proxy at the meeting considering the amendment may express their approval in writing, providing that approval is delivered to the Secretary at or prior to the meeting. The approvals must be either:

(a) By not less than Sixty-Six and Two-Thirds

OR BOOK 390 PAGE 2512

(66 2/3%) Percent of the votes of the entire membership of the Association and by not less than a majority of the Board of Directors.

(b) By not less than Seventy-Five (75%) Percent of the votes of the entire membership of the Association.

12.3 Proviso - No amendment may be adopted which would eliminate modify, prejudice, abridge or otherwise adversely affect any rights, benefits, privileges or priorities granted or reserved to the Developer or mortgagees in each instance. No amendment shall be made that is in conflict with the Articles or Declaration.

12.4 Execution and Recording - A copy of each amendment shall be attached to a certificate certifying that the amendment was duly adopted as an amendment of the Declaration and Bylaws, which certificate shall be executed by the President or Vice President and attested by the Secretary or Assistant Secretary of the Association with the formalities of a deed. The amendment shall be effective when the certificate and copy of the amendment are recorded in the public records of the County.

13. RULES AND REGULATIONS

Annexed hereto and made a part hereof are rules and regulations concerning the use of portions of the Condominium. The Board of Directors may from time to time modify, amend or add to such rules and regulations, except that owners of a majority of the Units present and voting at a meeting at which a quorum is present may overrule the Board with respect to any such modifications, amendment or addition. Copies of such modified, amended or additional rules and regulations shall be furnished by the Board of Directors to each Unit Owner not less than thirty (30) days prior to the effective date thereof.

14. CONSTRUCTION

Wherever the context so permits, the singular shall include the plural, the plural shall include the singular, and the use of any gender shall be deemed to include all genders.

15. CAPTIONS

The captions herein are inserted only as a matter of convenience and for reference and in no way define, limit or describe the scope of these Bylaws of Avalon Beach Club Condominium Association, Inc., a corporation not for profit under the laws

the State of Florida, at the first meeting of the Board of Directors on the 29th day of December 1983.

AVALON BEACH CLUB CONDOMINIUM ASSOCIATION, INC.
a Corporation Not For Profit

BY: _____
Secretary

APPROVED:

_____
President

Michelle Franklin, CFA -- Saint Lucie County Property Appraiser -- All rights reserved.

Property Identification

Site Address: 355 S OCEAN DR T-601
Sec/Town/Range: 01/35S/40E
Map ID: 24/01A
Zoning: R4A

Parcel ID: 2401-522-0023-000-7
Account #: 15110
Use Type: 0400
Jurisdiction: Fort Pierce

Ownership

Gregory N Jones
Kimberly D Jones

355 S OCEAN DR T-601
Fort Pierce, FL 34950

Legal Description

AVALON BEACH CLUB UNIT T-601

Current Values

Just/Market Value:	$240,400
Assessed Value:	$189,135
Exemptions:	$0
Taxable Value:	$189,135

Taxes for this parcel: SLC Tax Collector's Office
Download TRIM for this parcel: Download PDF

Total Areas

Finished/Under Air (SF):
Gross Area (SF):
Land Size (acres):
Land Size (SF):

Sale History

Date	Book/Page	Sale Code	Deed	Grantor	Price
Nov 21, 2018	4208 / 1450	0311	QC	Jones Barbara D	$285,700
Jun 25, 2018	4151 / 1680	0205	WD	Walker Michael R	$359,000
Mar 27, 2009	3078 / 0134	0311	WD	Warner David J	$0
Mar 27, 2009	3074 / 2960	0001	WD	Warner David J	$278,000
Jun 14, 2007	2836 / 0700	XX31	WD	Oginz Arthur R	$174,000
Feb 26, 2004	1908 / 1556	XX00	WD	Moon Jerome F	$251,500
Sep 18, 1997	1100 / 1168	XX00	WD	POLACK PRINTING INC	$120,000
Jul 1, 1983	0408 / 1698	XX02	CV		$161,000

Building Information (1 of 1)

Finished Area: 1,840 SF

Gross Total Area: 1,985 SF

Exterior Data

View:	Roof Cover:	Roof Structure:
Building Type: X008	Year Built: 1982	Frame:
Grade: X8G	Effective Year: 1982	Primary Wall: CB Stucco
Story Height: 2 Story	No. Units: 1	Secondary Wall:

Interior Data

Bedrooms: 3	Electric:	Primary Int Wall:

Full Baths: 2 | Heat Type: | Avg Hgt/Floor: 0
Half Baths: 1 | Heat Fuel: | Primary Floors:
A/C %: 0% | Heated %: 0% | Sprinkled %: 0%



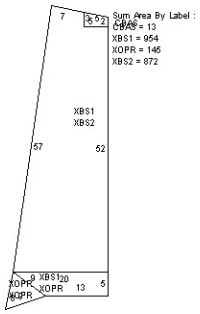

Sketch Area Legend

Sub Area	Description	Area	Fin. Area	Perimeter
CBAS	BASE LIVING AREA 1ST FLOOR	13	13	15
XBS1	Base Floor Living Area (Value Calculated)	955	955	191
XBS2	2nd Floor Living Area (Value Calculated)	872	872	144
XOPR	Open Porch (Value Calculated)	145	0	99

Special Features and Yard Items

Type	Qty	Units	Year Blt

Current Year Values

Current Values Breakdown

Building:	$240,400
Land:	$0
Just/Market:	$240,400
Ag Credit:	$0
Save Our Homes or 10% Cap:	$51,265
Assessed:	$189,135
Exemption(s):	$0
Taxable:	$189,135

Current Year Exemption Value Breakdown

Tax Year	Grant Year	Code	Description	Amount

Current Year Special Assessment Breakdown

Start Year	AssessCode	Units	Description	Amount
1999	0041	0.6	Fort Pierce Stormwater Charge	$32.40

This does not necessarily represent the total Special Assessements that could be charged against this property. The total amount charged for special assessments is reflected on the most current tax statement and information is available with the SLC Tax Collector's Office .

Historical Values

Year	Just/Market	Assessed	Exemptions	Taxable
2018	$240,400	$189,135	$0	$189,135
2017	$196,400	$171,941	$0	$171,941
2016	$166,200	$156,310	$0	$156,310

Permits

Number	Issue Date	Description	Amount	Fee
BP09-0551	May 12, 2009	Storm Shutters	$2,479	$50

Notice: This does not necessarily represent all the permits for this property.
Click the following link to check for additional permit data in Fort Pierce

This information is believed to be correct at this time but it is subject to change and is not warranted.
© Copyright 2019 Saint Lucie County Property Appraiser. All rights reserved.

THE SUNRISE CITY
FORT PIERCE
PLANNING DEPARTMENT
Florida

Kimberly Jones
355 S. Ocean Drive #601
Fort Pierce, FL. 34949

Re: Conditional Use – Kimberly Jones Dwelling Rental – 355 S. Ocean Drive #601

Dear Ms. Kimberly Jones,

The following are comments from the Planning Department's review of the application for a Conditional Use with No New Construction in the R-4A, Hutchinson Island Medium Density Residential Zone (Please Provide a Written Response and any revisions to all responsible Departments by December 31st to be placed on the January 8th Planning Board Agenda):

1) The maximum occupancy of the home ensures compliance with City Code Section 8.5-43. - Required space in dwelling units, based upon the size of each unit;

2) Registration of the property manager accessible at all times, to resolve complaints or violations of City Code;

3) Issuance of guide booklets (available from Code Enforcement) for renters regarding local rules and public service resources to minimize conflicts; and

4) The applicant files for and obtains St. Lucie County & City of Fort Pierce Business Tax Licenses within thirty-one (31) days of Conditional Use approval.

5) Limit no more than 2 vehicles.

6) Include the City of Fort Pierce Business Tax property control number on all advertising.

If deemed necessary, please provide a written response to each comment in order to expedite the review of any subsequent submittals. Please contact me should you have any questions regarding the project at (772) 467-3741 or by e-mail: vgilmore@city-ftpierce.com.

Sincerely,

Vennis Gilmore
Planning Analyst

THE SUNRISE CITY
FORT PIERCE
BUILDING DEPARTMENT Florida

BUILDING DEPARTMENT
TECHNICAL REVIEW COMMITTEE (TRC)
COMMENT FORM

Meeting Date: 12.20.18
Property Address: 355 S Ocean Dr. - 601
Property Name: Kimberly Jones Dwelling Rental
Project Name:
Planner: Vennis Gilmore

Please be advised that the project may trigger the requirements indicated below:

☑ 1. Building Official or his representative has no comment at the time of this meeting, but reserves submission of comments upon completion of the official plan review.

☐ 2. Pre-construction meeting with the City's Building Department is requested.

☐ 3. Any construction will need to meet the requirements of the Florida Building Code 6th Edition.

☐ 4. Means of egress is required.

☐ 5. Means of ingress is required.

☐ 6. Must meet the following Accessibility requirements:

- ☐ Accessible route
- ☐ Handicapped parking spaces
- ☐ Means of egress

☐ 7. Change of Use required

- ☐ to include a signed and sealed Life Safety Plan
- ☐ to include a signed and sealed detailed comprehensive building plan.

☐ 8. Property exists in Special Flood Hazard Area. All Federal and State requirements shall be addressed.

☐ 9. Flood Development Permit required.

☐ 10. Building Permit required.

☐ 11. Signed and sealed construction drawings required.

☐ 12. Will need to meet the Fire Code.

☐ 13. Sprinkler system is required.

☐ 14. Smoke alarm system is required.

☐ 15. Other

Additional Comments/Requirements:

Building Official's or Representative's Signature _____ Date: 12/20/18

THE SUNRISE CITY
FORT PIERCE
CODE ENFORCEMENT
Florida

TO : **Vennis Gilmore, Planning Analyst**

FROM : **Peggy Arraiz, Code Compliance Manager**

SUBJECT : **TRC # 33-400001 – Jones Vacation Rental**

DATE : **December 19, 2018**

Code Enforcement has the following comments:

1. Ms. Jones failed to provide any information regarding how the short term / vacation rental unit will be managed or advertised. It is recommended that his packet be updated to include a narrative explaining these items.
2. It is recommended that Ms. Jones consider including the following information in her rental application packet:
    a. The packet should clearly identify who will be responsible for enforcement of the conditions imposed by the Conditional Use and who will be able to respond to any complaints or issues within a reasonable time.
    b. Compliance with all local ordinances, including noise violations.
    c. Advise if pets are permitted and if so, compliance with our local pet ordinances.
    d. The number of people permitted to stay at one time.
    e. The number of vehicles permitted and where they are required to be parked.
3. The owner is advised that short term rentals of 31 days to 6 months are required to have a City of Fort Pierce Business Tax Receipt in addition to the sales tax and tourism tax that they have already acquired.

THE SUNRISE CITY
FORT PIERCE
Florida
ENGINEERING
DEPARTMENT

TO : Vennis Gilmore, Planning Analyst

FROM : John R. Andrews, P.E., City Engineer TST

RE : Jones Residence Conditional Use – 355 S. Ocean Drive
TRC No. 33-4000001

DATE : December 10, 2018

RECEIVED
DEC 11 2018
CITY OF FORT PIERCE
PLANNING & ZONING

This is to advise you that we have completed the review of the following documents as received by this office on December 6, 2018:

- [x] Conditional Use Application
- [ ] P/D Drawings
- [ ] Test Reports & Related Documents
- [ ] Certificate of Completion
- [ ] Record Drawings
- [ ] Permits from applicable Local, State & Federal Agencies
- [ ] Clearances from all applicable Local, State and Federal Agencies

Based on our reviews and appropriate site final inspection, we

- [x] Recommend
- [ ] Do Not Recommend

- [x] Approval of Conditional Use
- [ ] Building Permit
- [ ] C/O

Developer, Owner, Engineer, Contractor and other members of the Development Team must be aware, the above recommendation is based only on the construction requirements of the engineering plans and other engineering documentation approved by this department. The Development Team shall be responsible for the compliance with other City department requirements and all approved documents, as well as Local, State and Federal regulations. The development requirements for this project may necessitate additional construction requirements that are not subject to this department's review for approval.

- [ ] See attached for engineering comments

JRA/TST/tst

Q:\ENGINEERING\Site Development Projects\J\Jones Dwelling Rental\Conditional Use\CU Approval - 121018.docx

1701 South 37th Street (34947)
PO Box 3191, Fort Pierce, FL 34948

Phone: 772.466.1600
Fax: 772.468.2414

Water/Wastewater Engineering
"Committed to Quality"

Technical Review Committee meeting

December 20, 2018

TECHNICAL REVIEW PROJECT # 33-4000001 (Conditional Use w/ No New Construction)

Conditional Use – Kimberly Jones Dwelling Rental – 355 S. Ocean Drive #601

Comments

FPUA W/WW Engineering: Approved

FPUA Electric & Gas Engineering: No comment

December 10th, 2018

Project: **Kimberly Jones Dwelling Rental**
Subject: **SURVEY REVIEW**
To: Vennis Gilmore
From: Rod Reed, PLS
SLC-Engineering Division

All comments are based on the Standards of Practice per 5J-17.050 thru 5J-17.052

SURVEY:

No comments for this Project.

Rod Reed, County Surveyor
St. Lucie County, Fl.
2300 Virginia Avenue
Ft. Pierce, Fl. 34982-5652
www.stlucieco.org
Ph. (772) 462-1721
E-mail reedr@stlucieco.org

THE SUNRISE CITY
FORT PIERCE
PLANNING DEPARTMENT
Florida

AFFIDAVIT OF NOTIFICATION AND MAILING

I, the undersigned, do hereby declare that I did mail copies of a notice of public hearings to each owner of the property located, or having any part thereof, situated within five hundred (500) feet of any point of the property for which the request has been made and to the owner of the property for which the request has been made, as required by Chapter 22, Article X, Section 22-143 of the Code of Ordinances.

Project: Conditional Use – Kimberly Jones Dwelling Rental – 355 S. Ocean Drive #601

Staff Name: Vennis Gilmore, Planning Analyst

Staff Signature: _____

Date Mailed: February 8, 2019

Number of Mailed Letters: 82

Attachments:
Copy of notice of public hearings
Mailing list
Map of properties notified

THE SUNRISE CITY
FORT PIERCE
PLANNING DEPARTMENT Florida

PUBLIC NOTIFICATION CERTIFICATION

PROJECT NAME: Conditional Use - Kimberly Jones Dwelling Rental - 355 S. Ocean Drive #601

NOTICES PROVIDED PURSUANT TO: City Code Section 22-143. Public Hearings A,B,C, & D

NOTICE BY NEWSPAPER: February 4, 2019

NOTICE BY MAIL: February 8, 2019

NOTICE BY SIGNS: Planning Board - January 3rd, 2019; City Commission - February 6th, 2019

VERIFIED BY: Vennis Gilmore **TITLE:** Planning Analyst

SIGNATURE: **DATE:** February 7, 2019

1
Richard Brown ETAL
15382 Navion DR
Port St Lucie, FL 34987-2522

2
Linda A Summers
2468 Harbour Cove DR
Hutchinson Island, FL 34949-1561

3
Arthur A Lowensten ETAL
906 1st Center AVE
Brodhead, WI 53520-1304

4
Tuyet P Merkert
2791 D RD
Loxahatchee, FL 33470-4897

5
Marly M Vollger
14601 Stirling RD
Southwest Ranches, FL 33330-2918

6
Thomas C Barrett ETAL
2049 SW Cranberry ST
Port Saint Lucie, FL 34953-1712

7
Crossed Anchors I Concominium Association Inc
1144 Fernandina ST
Fort Pierce, FL 34949-3374

8
James R McCauley III ETAL
342 Granada St
Fort Pierce, FL 34949-3224

9
Ander Sun Properties of Florida LLC
1712 Gulfstream AVE, Unit Apt A
Fort Pierce, FL 34949-3504

10
Roger C Jacobson ETAL
339 Hernando ST
Fort Pierce, FL 34949-2832

11
Z Double Z LLC
2722 Castle Glen CT
Castle Rock, CO 80108-8303

12
Charles J Fazio ETAL
325 Hernando ST
Fort Pierce, FL 34949-3240

13
Pasquale J Defeo
1235 Long Tea TER
Wellington, FL 33414

14
Mark Titone
606 Dahlia LN
Vero Beach, FL 32963-1844

15
Coshal LLC
2240 Palm Beach Lakes BLVD, Unit Ste 104
West Palm Beach, FL 33409-3403

16
Frances Pollaci
321 S Ocean DR, Unit Unit 2
Fort Pierce, FL 34949-3255

17
Brenda G Brady
316 Granada St
Fort Pierce, FL 34949-3224

18
Judith A Allen
25 Bradford LN
Oak Brook, IL 60523-2350

19
Thomas And Company LLC
310 S 2nd ST
Fort Pierce, FL 34950-1519

20
Gary R Price ETAL
571 South Lake Dr
Prestonburg, KY 41653-1303

21
Georgette Morency (LF EST)
351 Hernando ST
Fort Pierce, FL 34949-3240

22
Breno Souza ETAL
356 Granada ST
Fort Pierce, FL 34949-3224

23
Mart A Kull ETAL
114 Heiland Ave
Yorkville, OH 43971

24
Robin L Roberts ETAL
3670 W US Hwy 27
Clewiston, FL 33440

25
Joseph Corral ETAL
3462 N Moorings Way
Miami, FL 33133-6538

26
Frank Williams
2333 NE Pine Ridge St
Jensen Beach, FL 34957-5734

27
William M Cali (TR) ETAL
1609 Frances Ave
Fort Pierce, FL 34949

28
Grace Lucas
2341 SE Charleston DR
Port St Lucie, FL 34952-7007

29
Archie`s Seabreeze Inc
401 S Ocean Dr
Fort Pierce, FL 34949

30
Hernando Avenue Ltd
1369 Bayshore Dr
Fort Pierce, FL 34949-3083

31
TRI-W PROPERTY MANAGEMENT LLC
PO Box 695094
Miami, FL 33269-2094

32
Rio Lindo Properties LLC
315 Avenue A
Fort Pierce, FL 34950-4418

33
Lynne T Baldwin
3502 Washington RD
West Palm Beach, FL 33405-1940

34
Cheri G Surloff
501 Palm Dr
Hallandale, FL 33009-6533

35
St Lucie County
2300 Virginia Ave
Fort Pierce, FL 34982-5632

36
Paul D Mandel (TR) ETAL
6801 E Cypresshead DR
Parkland, FL 33067-1605

37
Frank D Williams
2333 Pineridge St
Jensen Beach, FL 34957

38
Richard D Stinson ETAL
409 Hernando Street
Fort Pierce, FL 34949-3242

39
Avalon Beach Club a Condominium
430 NW Lake Whitney Place
Port St Lucie, FL 34986

40
Stelly-Hoven Inc
4521 PGA Blvd Ste 201
Palm Beach Gardens, FL 33418

41
Steven Tarr (TR)
4521 PGA BLVD, Unit # 201
Palm Beach Gardens, FL 33418-3997

42
David M Miller ETAL
412 Granada ST
Fort Pierce, FL 34949-3226

43
James E Peppers (LF EST) ETAL
355 S Ocean Dr # T-102
Fort Pierce, FL 34949-3255

44
Karen A Megna (TR)
355 S Ocean DR, Unit Apt T-103
Fort Pierce, FL 34949-3251

45
Mark Vosgien
12 Parshley Ln
Brentwood, NH 03833

46
Peggy Buckner ETAL
10030 SW 83rd St
Miami, FL 33173

47
Richard Kennedy Jr ETAL
355 S Ocean Dr #106
Fort Pierce, FL 34949

48
Ken Irish ETAL
355 S Ocean Dr Unit F201
Fort Pierce, FL 34949

49
Margareta J Jackson
355 S Ocean DR, Unit Unit F-301
Fort Pierce, FL 34949-3251

50
Anne B Paglia ETAL
Chemin des Traversins 33 - 1285 Avusy
Geneva

51
Lois P Cooke (LF EST)
355 S Ocean Drive #402
Fort Pierce, FL 34949

52
James J Reynolds ETAL
355 S Ocean DR, Unit Apt 404
Fort Pierce, FL 34949-3281

53
Evelyn Moore
355 S Ocean Dr # F405
Fort Pierce, FL 34949-3251

54
Sylvia R Kahler (LFEST)
355 S Ocean Dr Apt 501
Fort Pierce, FL 34949-3281

55
Velma A Sowerby (LF EST)
355 S Ocean Drive #502
Fort Pierce, FL 34949

56
Lise T Chase (TR)
556 Hudson Rd
Sudbury, MA 01776-1969

57
Michel Personnaz (TR) ETAL
322 Clocktower DR
Jupiter, FL 33458-3503

58
William V Higgins ETAL
300 Astri Terr
Valley Cottage, NY 10989

59
Robert Wittenmyer ETAL
355 S Ocean Dr Apt 801
Fort Pierce, FL 34949-3282

60
Joseph G Doster Sr ETAL
355 S Ocean DR, Unit Apt 802
Fort Pierce, FL 34949-3282

61
Micheca St Hilaire
355 S Ocean DR, Unit Unit P-804
Fort Pierce, FL 34949-3251

62
Rex E Drulard (TR) ETAL
370 NE Pepper NE ST
Palm Bay, FL 32907-1343

63
William J Wink Jr (TR)
355 S Ocean DR, Unit Apt 809
Fort Pierce, FL 34949-3282

64
Rick Kulczynski ETAL
1901 Rio Vista DR
Fort Pierce, FL 34949-3431

65
Larry W Burdgick ETAL
355 S Ocean DR, Unit # F-403
Fort Pierce, FL 34949-3251

66
Joseph G Doster
355 S Ocean Dr Apt 802
Fort Pierce, FL 34949-3282

67
Sylvia C Pugh (TR) ETAL
1614 Bahia DR
Fort Pierce, FL 34949-3545

68
Peter J Nigro ETAL
355 S Ocean DR, Unit Apt 303
Fort Pierce, FL 34949-3281

69
Todd S Ludwig
355 S Ocean Dr #806
Fort Pierce, FL 34949

70
Barbara D Jones
2021 Red Fox WAY
Augusta, GA 30907-8947

71
William V Higgins ETAL
300 Astri TER
Valley Cottage, NY 10989-1239

72
Melanie S VanDenbos 2004 Rev Trust
1706 Francis CT
Fort Pierce, FL 34949-3579

73
William J Wink Jr (TR)
355 S Ocean DR, Unit Apt 808
Fort Pierce, FL 34949-3282

74
Raymond Wright ETAL
10240 Seagrape Way
Palm Beach Gardens, FL 33418

75
Amy Sottile ETAL
10244 Vestal CT
Coral Springs, FL 33071-5836

76
Cynthia A Little
102 Norman CIR
Oriental, NC 28571-9640

77
Peter Karekos ETAL
6688 Serena Ln
Boca Raton, FL 33433

78
Paul McCann (TR) ETAL
11668 Hackberry ST
Palm Beach Gardens, FL 33410-2629

79
Ronald Howell ETAL
742 Lanmark Ln
Badger, MN 56714

80
April Mincey
332 Hernando ST, Unit Apt 2
Fort Pierce, FL 34949-3291

81
Cross Anchor Group LLC
1210 Hibiscus AVE
Fort Pierce, FL 34950-9226

82
Roy A Oth
332 Hernando ST, Unit Apt 4
Fort Pierce, FL 34949-3291

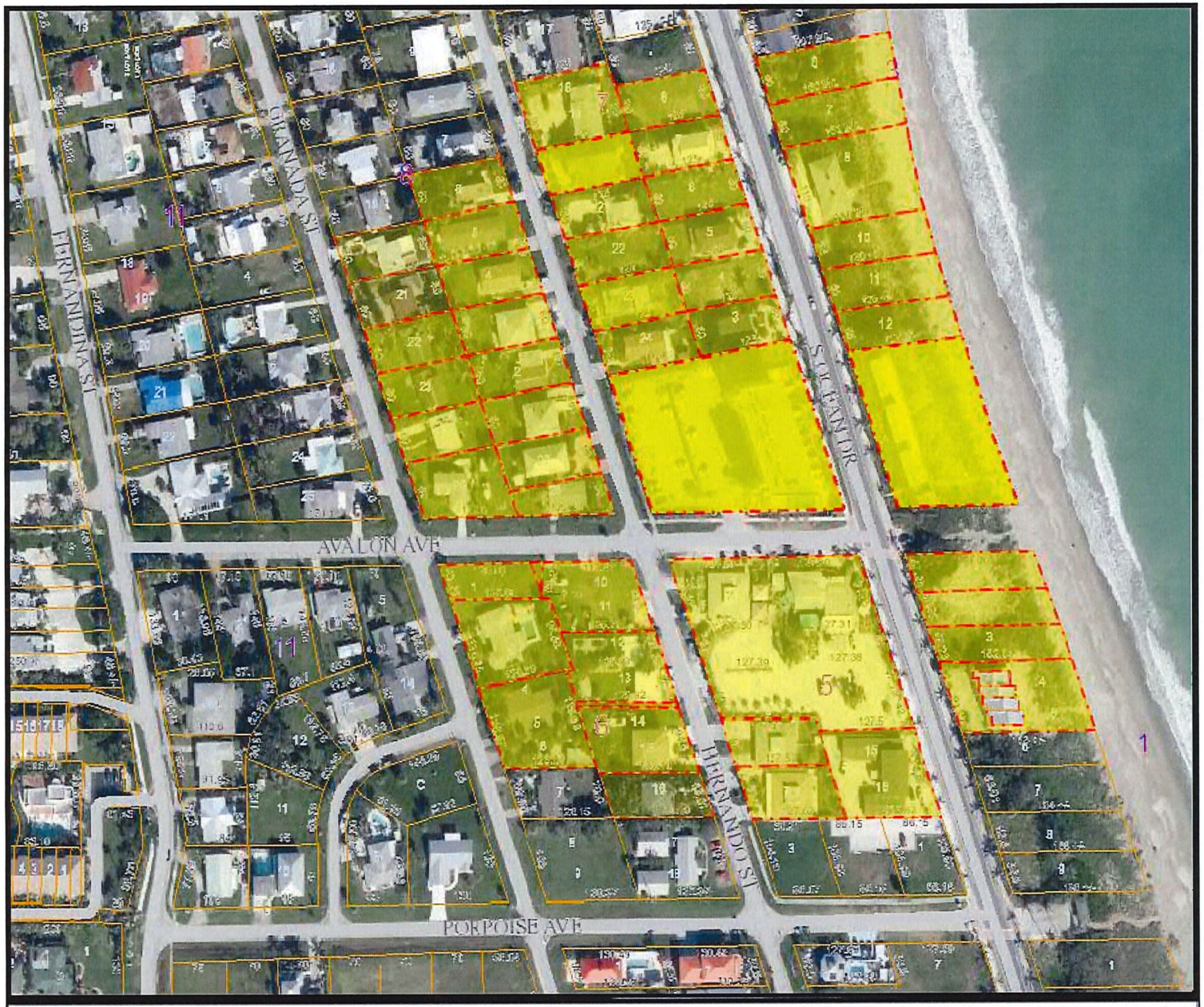

N
W E
S

Adjacent Property Owner Map

355 S. Ocean Drive #601

THE SUNRISE CITY
FORT PIERCE
Florida

City Commission Regular Meeting **12.d.**

Meeting Date: 02/19/2019

Re: Conditional Use - We Buy Scrap - 3340 Enterprise Road

Submitted For: Rebecca Grohall, Director, Planning & Zoning

SUBJECT:

Quasi-Judicial Hearing - Review and approval of an application for Conditional Use with No Construction submitted by Property Owners, H. & S. Citrus Inc., Applicant, We Buy Scrap, & Representative, Jim Frogner of Frogner Consulting, LLC, to operate a metal recycling facility, located at 3340 Enterprise Road & 1237 Grose Road in Fort Pierce, FL. The property is zoned Light Industrial (I-1) Parcel ID: 2428-502-0035-000-5 & 2426-502-0033-000-1

SUMMARY:

- The applicant is seeking a Conditional Use with no new construction approval to operate a metal recycling facility at 3340 Enterprise Road. A metal recycling facility would be categorized as a waste related use pursuant to City Code 22-22, Allowed Uses. The project is split into two parcels that will become one parcel through a parcel combination or Unity of Title.
- The applicant wishes to operate a metal recycling facility that will consist of both ferrous and non-ferrous metals such as steel, aluminum, iron, and copper. The business will not process used or inoperable vehicles, construction debris, or paper goods. The site will use the existing structures to house recycled material, which will be crushed into cubes that are approximately 3' x 4' in size. The crushed cubes will be loaded onto trucks and taken offsite to a smelter. There will be a temporary outdoor storage area where the metals that have been crushed will sit and be loaded onto trucks that will take them offsite.
- The Planning Board at their meeting on January 8, 2019 voted 6-0 to recommend approval of the request.
- 24 letters were sent out of property owners within 500 feet of the subject property.

RECOMMENDATION:

The proposed Conditional Use with no new construction meets the requirements of the City Code, and is in compliance with the City's Comprehensive plan. Staff recommends that the City Commission approve the Conditional Use with the following conditions:

1. A Landscape Plan that demonstrates compliance with City Code 22-187 will be required at the time of Building Permit.
2. A Lighting Plan or Photometric Survey that demonstrates compliance with City Code 22-60 (j) (1) (a) will be required at the time of Building Permit.
3. A Unity of Title or parcel combination will be required prior to submission of the building permit.
4. The operations adheres to a submitted and approved truck route to and from the site. The truck route must be submitted to the Planning Department prior to the City Commission meeting.
5. The facility confines operational hours to Monday through Saturday, 7: 00 am to 5:00 pm.
6. No melting or burning of any materials will take place on site.

7. All storage of recycling materials must be contained in the buildings on site, no outdoor storage.
8. All site drainage must be implemented with phase 1 of the project as well as submittal of the application with St. Lucie County for roadway abandonment of Grose Road and landscaping improvements on Enterprise Road must be completed in phase 1. Groase Road common area improvements are to be completed upon successful completion of the abandonment from St. Lucie County.

ALTERNATIVES:

Approve with Alternate Conditions
Deny

RESPONSIBLE STAFF:

Brandon C. Creagan, LEED Green Associate, Planner

COORDINATED WITH:

Technical Review Committee

Fiscal Impact

OTHER INFORMATION:

N/A

Attachments

Staff Report
Application & Supporting Materials
Aerial Map
Zoning Map
Justification for Alternate Parking Calculation
Commercial Vehicle Truck Route
TRC Comments
TRC Comment Responce from Applicant
Affidavit of Notification & Mailing
Public Notification Certification

Form Review

Inbox	Reviewed By	Date
City Manager	Nick Mimms	02/12/2019 11:18 AM

Form Started By: Brandon Creagan
Started On: 02/07/2019 02:15 PM
Final Approval Date: 02/12/2019

THE SUNRISE CITY
FORT PIERCE
PLANNING DEPARTMENT Florida

TO: Nicholas Mimms, PE, City Manager

THROUGH: Rebecca Grohall, AICP, Planning Director

FROM: Brandon Creagan, LEED Green Associate, Planner

SUBJECT: **Conditional Use No New Construction**
We Buy Scrap
3340 Enterprise Road

DATE: February 7, 2019

STAFF REPORT

Applicant/Representative: Frogner Consulting, LLC
Jim Frogner
3402 SE Clubhouse Place
Stuart, FL 34997

Property Owner: H & S Citrus
3340 Enterprise Road
Fort Pierce, FL 34982

Requested Action: Approval with Conditions for a Conditional Use application for the operation of a metal recycling facility

Location: 3340 Enterprise Road

Parcel IDs: 2428-502-0035-000-5 & 2426-502-0033-000-1

Parcel Size: 3.86 acres

Zoning: I-1, Light Industrial

Future Land Use: I, Industrial (Pending FLUMA Application)

Surrounding Zoning:

North	East	South	West
I-1	I-1	I-1	I-1

Staff Analysis:

The applicant is seeking a Conditional Use with no new construction approval to operate a metal recycling facility at 3340 Enterprise Road. A metal recycling facility would be categorized as a waste related use pursuant to City Code 22-22, Allowed Uses. The project is split into two parcels that will become one parcel through a parcel combination or Unity of Title. Both properties have a zoning designation of I-1 light industrial, while one of the properties has a Future Land Use of INST, Institutional and the other property has a St. Lucie County Future Land Use of IND, Industrial. Both parcels were annexed into the City of Fort Pierce in 2006. There is an active application with the Planning Department to change the Future Land Use for both parcels to I, Industrial to bring them into compliance with their zoning designation. A waste related use is a Conditional Use in the I-1, Light Industrial zoning district. This site was previously a citrus packing plant and there are three (3) buildings on site.

The applicant wishes to operate a metal recycling facility that will consist of both ferrous and non-ferrous metals such as steel, aluminum, iron, and copper. The business will not process used or inoperable vehicles, construction debris, or paper goods. The site will use the existing structures to house recycled material, which will be crushed into cubes that are approximately 3' x 4' in size. The crushed cubes will be loaded onto trucks and taken offsite to a smelter. There will be a temporary outdoor storage area where the metals that have been crushed will sit and be loaded onto trucks that will take them offsite. It is planned that during a later phase of the project a rail spur will be installed so that the company has the ability to transport the crushed metals by rail. The applicant has provided a phasing plan for the business that will occur over a three (3) year time period.

Phase 1:

The initial operation of the 15,642 square foot facility (Building 1) will include new paving for vehicle entry off Enterprise Road as well as installation of the landscape buffer, irrigation system, and entry signage. The interior of building #1 will remain the same, except that life safety measures will be updated to current code. Also there will be a focus on ensuring that the restrooms and entryways of building #1 are fully ADA compliant.

Phase 2:

A new truck scale will be installed along with new parking spaces on the northern part of the property next to building three (3). Exterior improvements will include painting of the exterior and removal of all mechanical equipment that exists on the south façade from the former citrus plant. Building 2 will be utilized during this phase.

Phase 3:

This last phase is where the rail spur will be installed onsite as well as a new driveway to the south of the property that will connect to Enterprise Road. Building 3 will be utilized during this phase.

Parking:

The required parking for the site is fifty one (51) spaces, but due to the nature of the business and the fact that the business will not be open to the public the applicant has request an alternate parking calculation be used pursuant to City Code 22-60(a)(3). The applicant consulted with Pinder Troutman Transportation Engineers, who produced parking data from the Institute of Transportation Engineers (4th Edition). It was concluded that the appropriate parking calculation would be .81 parking spaces per employee for warehouse uses and .88 parking spaces for employees for manufacturing uses. As the business will only

have no more than 15 employees that would be approximately 12 parking spaces that would be needed according to this study. With that said the applicant has agree to provide more parking than what the study calls for. The applicant is proposing 25 parking spaces. Eighteen (18) parking spaces will be provided in phase 1, with seven (7) parking spaces would be provided in phase 2. The applicant has put an emphasis on the notion that this facility is not for the general public, meaning there will only be employees utilizing the parking spaces that will be provided onsite. The truck drivers that are driving to the site will not be getting out of their trucks, they will be driving in, and either unloading material or picking up processed material and driving right back out of the site.

Landscape Buffer and Fence

The site has an existing 6 foot fence and it will be modified to increase in height to 8 feet. This fence will also have a green fabric that will be installed on the fence so that nothing on the inside of the property is visible from the outside. Landscaping will include nine (9) Sabal Palms, six (6) Dahoon Holly trees, and shrubbery and groundcover. Phase three of the project will see the installation of a 10 foot landscape buffer on the southern perimeter of the property that will incorporate slash pines and other native plant materials and a swale for drainage.

Technical Review Committee:

All affected City Departments have reviewed the proposed Conditional Use and have provided conditional approval based on compliance with requirements of the City Code. The comments generated from the technical review are provided for review. The applicant's response to comments generated by the reviewers will also be included for your review.

Planning Board:

The Planning Board at their meeting on January 8, 2019 voted 6-0 to recommend approval of the request.

Public Notification:

24 letters were sent out of property owners within 500 feet of the subject property. No letters have been returned. An update will be given at the City Commission meeting.

Staff Recommendation:

Staff recommends that the Planning Board forward a recommendation of approval for the Conditional Use to the City Commission with the following conditions:

1. A Landscape Plan that demonstrates compliance with City Code 22-187 will be required at the time of Building Permit.

2. A Lighting Plan or Photometric Survey that demonstrates compliance with City Code 22-60 (j) (1) (a) will be required at the time of Building Permit.

3. A Unity of Title or parcel combination will be required prior to submission of the building permit.

4. The operations adheres to a submitted and approved truck route to and from the site. The truck route must be submitted to the Planning Department prior to the City Commission meeting.

5. The facility confines operational hours to Monday through Saturday, 7: 00 am to 5:00 pm.

6. No melting or burning of any materials will take place on site.

7. All storage of recycling materials must be contained in the buildings on site, no outdoor storage.

8. All site drainage must be implemented with phase 1 of the project as well as submittal of the application with St. Lucie County for roadway abandonment of Grose Road and landscaping improvements on Enterprise Road must be completed in phase 1. Groase Road common area improvements are to be completed upon successful completion of the abandonment from St. Lucie County.

THE SUNRISE CITY
FORT PIERCE
PLANNING DEPARTMENT Florida

Conditional Use – No New Construction

Property address or Location 3340 Enterprise Rd, Ft. Pierce FL

Parcel ID #(s) 2428-502-0035-000-5 and 2428-502-0033-000-1

Project description Waste Related Use-Metal Recycling

H. & S. Citrus Inc.	Jim Frogner, President, Frogner Consulting, LLC
Property Owner(s)	**Applicant/Representative, Title, Company**
3340 Enterprise Road	3402 SE Clubhouse Pl
Street Address	Street Address
FT. Pierce, FL 34982	Stuart, FL 34997
City State Zip	City State Zip
	561-386-3035
Phone Number	Phone Number
rdeerydds@aol.com	jfrogner@comcast.net
Email Address	Email Address

Property Owner(s) Acknowledgements: *- This application will not be considered complete without the signature of all property owners of record, which shall serve as an acknowledgement of the submission of this application. The property owner's signature below shall also authorize the Applicant (if other than the property owner) and/or Representative to act in his/her behalf for the purposes of seeking approval for the application described herein.*

Robert E. Deery, DDS, President/CEO, H+S Citrus, Inc.

Property Owner(s) Signature(s)

STATE OF FLORIDA -- COUNTY

The foregoing instrument was acknowledged before me this 24 day of October, 2018, by Robert E. Deery who is personally known to me or has produced _____ as identification.

Kathleen P. Downs

Signature of Notary (seal)

KATHLEEN P. DOWNS
Notary Public - State of Florida
Commission # FF 934139
My Comm. Expires Nov 5, 2019
Bonded through National Notary Assn.

INTAKE MEETINGS ARE REQUIRED FOR ALL SUBMITTALS. CALL (772) 467-3729

TO BE COMPLETED BY STAFF

Zoning	Future Land Use	Total Acres	Historic District	Historic Designation
				Contributing Individual Non-Contributing None

Pre-Application Meeting Date_____ Fees_____ Control #_____ B. Permit #_____

Intake Planner_____

Planner Assigned_____

Approved By_____ Date _____

Comments_____

Intake Date Stamp

❑ CONDITIONAL USE: NO NEW CONSTRUCTION

Submit one original, seven (7) hard copies and one (1) CD of the following for initial submittal, subsequent submittals will be required:

- ☒ *If no site improvements are required:*
  - ☒ As-built survey
  - ☒ Floor plan of existing building(s)
- ❑ *If parking and drainage improvements are required:*
  - ❑ As-built survey;
  - ❑ Site plan, to scale, including existing improvements and proposed parking, driveways, landscaping & storm drainage;
  - ❑ Lighting plan
- ❑ Complete, notarized application

Application Outlook

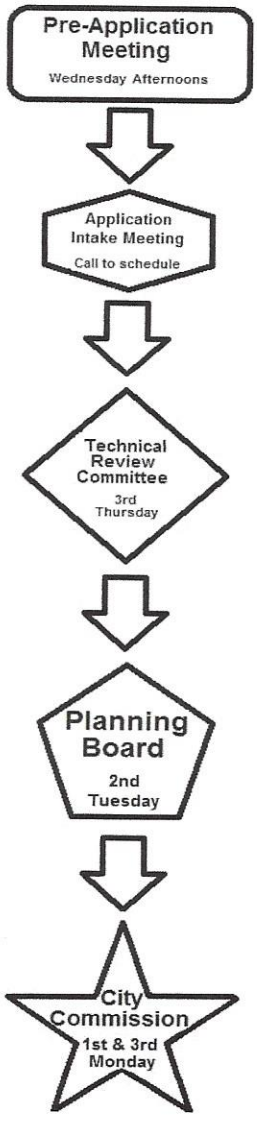

Application Type:

- ■ Conditional Use: No new construction with no site improvements
- ❑ Conditional Use: No new construction with parking and drainage improvements

Site Information:

Building Size 15,624 Parking Spaces: 31

Surrounding Uses: *(i.e. single family home, retail, industrial, etc.)*

North	South	East	West
I-1	I-1	I-1	I-1

The application for conditional use with the application for site plan review, when not exempt in accordance with the requirements of section 22-75, shall be reviewed as a unit in accordance with the requirements of section 22-58 except that:

(1) The city commission shall hold a public hearing in accordance with the provisions of section 22-143 prior to acting on the application for conditional use.

(2) In the event the city planning board disapproved the application for conditional use or in case of a protest against said application signed by twenty (20) per cent of the owners within five hundred (500) feet of the area included in said application, such application shall not be approved except by a four-fifths vote by the city commission.

(3) In permitting a conditional use or the modification of an existing conditional use, the city commission may impose, in addition to those standards and requirements expressly specified in this chapter, any condition which it finds to be necessary to protect the best interest of the surrounding property of the city.

November 26, 2018

INTRODUCTION

A Conditional Use application is being submitted which will lead to approval of the Waste-Related Use as outlined in Section 22-22, Allowed Uses.

The 3.86 acre site formerly known as H & S Citrus supports three structures on the site previously constructed in 1972, originally built to function as a citrus packing plant. The site is located on Enterprise Road west of the Farmers Market in a heavily industrialized/commercial area. An application for a small scale land use change has been submitted and the City of Ft Pierce Planning Board approved the land use change on November 13th – the final approval by the City Commissioners is scheduled for January 21, 2019.



The new owner operates a metal recycling facility in Palm Beach County and intends the same use on this site. A zoning confirmation letter issued by Planning staff on June 27, 2018 states, "Per City Code Section 22-22, a metal recycling facility is classified as a Waste-Related Use". In this case, the proposed waste related use or "Recycling Facility" will be strictly for metals; both ferrous and non-ferrous metal such as steel, aluminum, iron and copper. The business does not process used or inoperable vehicles, construction debris or paper goods.

1. Consistency with the Plan

In 2006, when the citrus packing facility was in operation, the City of Ft. Pierce annexed the site from St Lucie County (SLC) into the city. The SLC zoning designation of light industrial was designated as I-1, Light Industrial by the City. The Future Land Use will be I-Industrial once the application is approved, thus the zoning will be consistent with the land use.

2. Zoning and Use

The industrial designation of I-1, Light Industrial is intended for parcels suitable for industrial development that promote employment including light manufacturing and processing facilities. The site meets or exceeds the code regulations in Section 22-34, for the I-1 district. A "waste Related" recycling facility requires a Conditional Use approval.

Site Function:

The site will function using the existing structures to house recycled material which is crushed into "cubes" approximately 3' x 4' and stockpiled for delivery to a smelter elsewhere. The area adjacent to and encompassing the roofed-open-air structures will be used as a processing area where scrap material is delivered via commercial vehicles after traversing over the scale at the projects entry from Enterprise road. The area shown as "processing area" on the site plan is a temporary outdoor storage area where commercial vehicles unload the material or placed into containers for sorting. Once the material is sorted, containers or stock material will be moved into the facility for further processing. This area is bordered by the 30' setback as shown on the site plan and screened from view by an 8' fence with green opaque fabric as required by code provisions in Sec. 16-69(d) & 16-67(e).

A rail siding will be installed at a later date (Phase III) for rail shipping to a smelter. The equipment used for processing the delivered scrap are tracked vehicles, thus this area is exempt from hard surface pavement-which has existed as hard-packed surface since 1972 when the citrus processing facility was in operation. It should be noted that the majority of similar or industrial facilities in the surrounding area lack adequate screening, however the petitioner intends to set a "clean precedent" in so far as a modern day recycling facility. The finished/cubed material will be placed either adjacent to the proposed RR siding or stacked while awaiting loading into the trucks, then transported to the smelter off site. Any outdoor storage of finished material will be temporary in nature (1-3 days) and screened from view.

The operator will be using a small portion of the site as business grows-thus the utilization of the site will be phased as follows:

Phasing Plan will occur over a period of 3 years

Phase I, the initial operations of the 15,642 SF facility includes new paving for vehicle entry off enterprise and installation of the landscape buffer, irrigation and entry signage. The interior of the building # 1 will remain "as is" except for life safety (smoke detectors, exit lights, etc), minor electrical and ADA compliant entry & restrooms.

Phase II will include the new truck scale, parking spaces on the north perimeter and exterior improvements such as painting and removal of the mechanical equipment on the south façade once the operating "kinks" are worked out.

Phase III, will include a new landscape buffer and swale for improved drainage on the south once Grose Road is abandoned, construction of the rail siding and the new driveway on the south connecting to Enterprise Road. Parking will be added as necessary and if required, a request for site plan approval will be submitted for minor modifications to the site plan.

Off-street parking and loading areas;

There are no parking code provisions for a junkyard or waste related use; Planning staff has noted that the "warehouse" classification for off street parking "is the closest fit" for the use on the site. The code for a warehouse use requires 1 parking space per 600 SF or a total of 51 parking spaces on the site. The initial Phase (1) will provide 18 parking spaces in the existing building and Phase II & II will provide the remainder as shown on the site plan phasing box.

It should be noted that the actual operations of the site only require parking for employees (up to 15). The reality is, commercial vehicles entering the site are weighed, then the vehicle drives to the processing area or loading dock and unloads the material-THERE IS NO REASON FOR CUSTOMERS TO PARK-they do not exit their vehicles. However, 2 handicapped spaces and 18 regular parking spaces are shown on the site for phase I.

All screens and landscape buffers;

The site has an existing 6' fence. The fence will be modified on the perimeter to increase the height to 8' and a green fabric screening material will be installed. Thus screening of the interior of the site will meet code provisions. The entry off Enterprise Road will receive new driveway paving per SLC code and new landscaping as shown on the detail included in the site plan. The landscaping consists of 17 sabal palms and 11 dahoon holly trees with shrubbery and groundcover presenting a lush tropical aesthetic. Phase III on the southern perimeter will include a new 10' landscape buffer incorporating slash pines and other native plant material and swale for drainage.

A general landscaping plan will be submitted in connection with the change of use building and demolition permit once the use approval is granted.

Refuse collection areas:

There will be at least 2 dumpsters on wheels inside the roofed open-air structure, thus no "dumpster enclosure" is shown on the site.

Setbacks:

The existing structures meet the setbacks enacted at the time the facility was constructed in 1972 and no additions to the physical structures are intended. The setback for outdoor storage (New Junkyards) is 30' as shown on the site plan.

3. Compatibility with Surrounding Uses

The site is on the west side of the State Farmers Market and surrounded by industrial and service uses, including pipe manufacturing, AT&T vehicle service facility, self-service storage facilities and manufacturing & construction related businesses. As previously noted, a land use change has previously been submitted to the Planning Department and the first hearing is scheduled for November 2nd, 2018.

The surrounding area is summarized in the aerial and chart below:

Adjacent Land Use & Zoning Summary			
Adjacent Uses	**Existing Use**	**FLU**	**Zoning**
North	Self-storage-outdoor/indoor	I-Industrial	I-1 Light Industrial
South	ATT service yard	I-Industrial	I-1 Light Industrial
East	Contractor yard	I-Industrial	I-1 Light Industrial
West	Vacant industrial	I-Industrial	I-1 Light Industrial

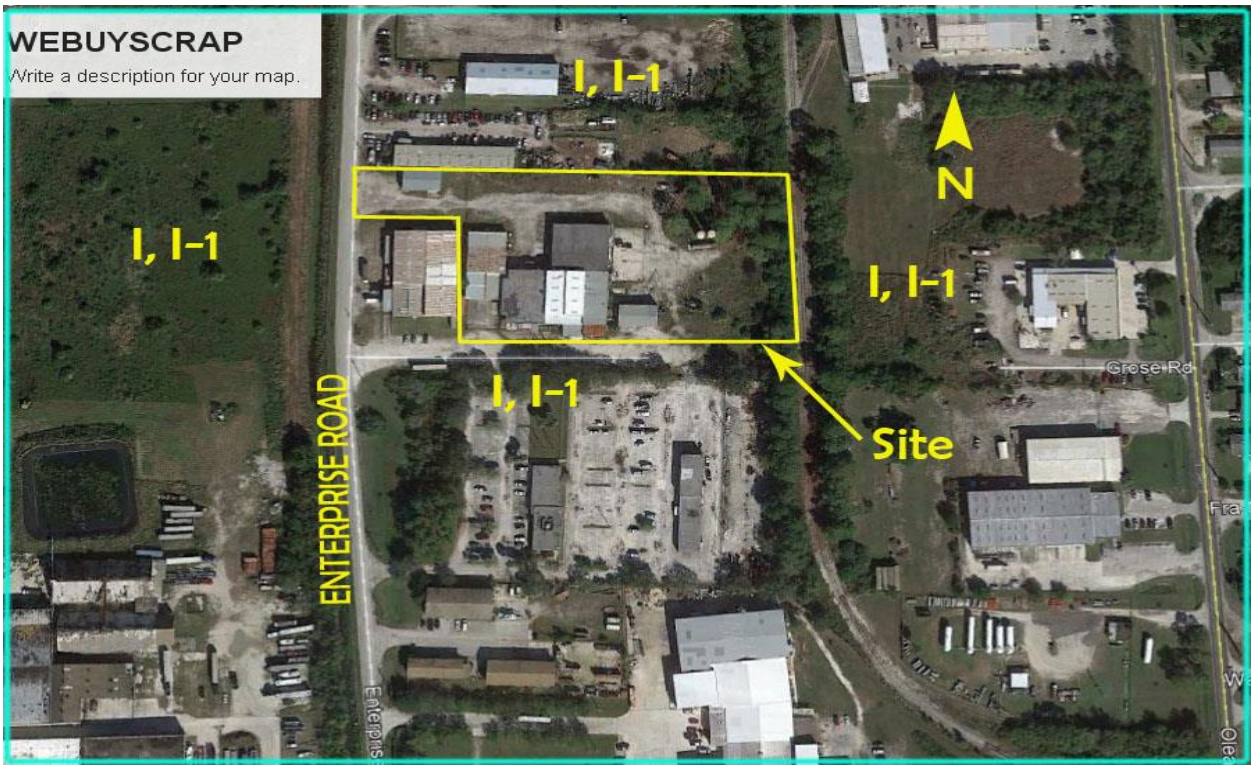

4. Environmental Performance Standards

The proposed recycling facility will not cause smoke, fire, radiation or toxic matter on site. The facility will operate tracked backhoes, bobcats and "grabber" type machinery for loading and unloading of metal from commercial vehicles.





5. Adequate Public Facilities

The existing structure and site has been used as a citrus packing facility since 1972 but closed in early 2012 and has remained vacant since then.

Water and Sewer capacity for the existing site and uses are comparable in scope to the previously approved use and no new construction will occur on site from the change in use. Drainage for the site is described on the attached Drainage Statement prepared by Jonathan T. Ricketts, Inc. Traffic generation for the site will remain unchanged and has an insignificant impact on area roadways.

Drainage:

A drainage Statement by Jonathan T. Ricketts, Inc. has been provided. The site in existence since 1972, will utilize the facility as designed per the drainage review. Phase III will include the abandonment of Grose Road from SLC, perimeter landscaping & swale and a new driveway from the facility to Enterprise Road.

Building:

A change of use permit is required by the building department for the use on site. A floor plan has been provided and building permits will be applied for and obtained once the use is approved.

Changed Conditions or Circumstances

There are demonstrated changed conditions or circumstances that necessitate this request as follows:

1. The citrus packing facility has been closed since 2012 due to the loss of thousands of acres of citrus as well as industry trends that include a downturn in the citrus industry.

2. The site was annexed into the City of Ft Pierce in 2007 through approval of Ordinance NO. K-706. The zoning was changed from St Lucie County Industrial to the city designation of I-1, Light Industrial; however the SLC future land use designation was not changed. On September 26, 2018, an application was submitted to the City for a land use change. The request is a corrective action to ensure consistency with the city's comprehensive plan map.

Future Plans

As previously stated, the operator of the facility will "grow" into the site. The advantage of this will allow the most efficient use of the site providing the business with the ability to change depending on future trends such as international tariffs, the increase/decrease pricing of various metals, new equipment purchases such as a portable smelter or the rail siding for material delivery to the nearest port-until recently, the majority of recycled metal was shipped overseas. Due to international tariffs and other financial elements in the industry, smelter plants in Tennessee receive the majority of recycled material from the southeast areas.

In connection with the above summary and compliance with the City of Ft. Pierce planning and zoning regulations, the applicant respectfully requests approval of the Conditional Use to approve the proposed Scrap Metal and Recycling Operation.

JOSEPH E. SMITH, CLERK OF THE CIRCUIT COURT - SAINT LUCIE COUNTY
FILE # 3934094 OR BOOK 3612 PAGE 657, Recorded 03/13/2014 at 04:39 PM
Doc Tax: $280.00

This Document Prepared By and Return to:

Melissa Harnage
St. Lucie Title Services, Inc.
800 Virginia Ave, Suite 47
Fort Pierce, FL 34982

Parcel ID Number: 2428-502-0035-000/5

Warranty Deed

This Indenture, Made this 12th day of March , 2014 A.D., **Between**
John S. Cemer, as to an undivided one half interest

of the County of Washoe , State of Nevada , **grantor,** and
George B. Brown

whose address is: PO Box 1478, Fort Pierce, FL 34954

of the County of St. Lucie , State of Florida , **grantee.**

Witnesseth that the GRANTOR, for and in consideration of the sum of
----------TEN DOLLARS ($10)---------- DOLLARS,
and other good and valuable consideration to GRANTOR in hand paid by GRANTEE, the receipt whereof is hereby acknowledged, has granted, bargained and sold to the said GRANTEE and GRANTEE'S heirs, successors and assigns forever, the following described land, situate, lying and being in the County of St. Lucie State of Florida to wit:

The Southerly 100 feet of Lot 29, Industrial Subdivision, according to the plat thereof, as recorded in Plat Book 9, Page(s) 5, of the Public Records of St. Lucie County, Florida.

The property herein conveyed DOES NOT constitute the HOMESTEAD property of the Grantor.

and the grantor does hereby fully warrant the title to said land, and will defend the same against lawful claims of all persons whomsoever

In Witness Whereof, the grantor has hereunto set his hand and seal the day and year first above written.

Signed, sealed and delivered in our presence:

Printed Name: Nick Nelson
Witness

Printed Name: Don Parco
Witness

John S. Cemer (Seal)
John S. Cemer
P.O. Address: **748 South Meadowns Pkwy., Ste. A9, Box 334**
Reno, NV 89521

STATE OF Nevada
COUNTY OF Washoe

The foregoing instrument was acknowledged before me this 5th day of March , 2014 by
John S. Cemer

who is personally known to me or who has produced his Driver License as identification.

NOTARY PUBLIC
STATE OF NEVADA
County of Washoe
BRADY A. SHEA
No: 13-10652-2
My Appointment Expires May 3, 2017

Printed Name: Brady A Shea
Notary Public
My Commission Expires: 3 MAY 2017

Laser Generated by © Display Systems, Inc., 2014 (863) 763-5555 Form FLWD-1

MORTGAGE DEED
From Corporation to Individual

RAMCO FORM RE3E

466915

This Mortgage Deed

Executed the 20th day of November, A. D. 19 79 by

H & S CITRUS, INC., a Florida corporation,

a corporation existing under the laws of Florida, and having its principal place of business at Grose Road, Fort Pierce, Florida 33450 hereinafter called the mortgagor, to

WILLIAM A. TAYLOR

whose postoffice address is 2208 Cortez Boulevard, Fort Pierce, Florida 33450 hereinafter called the mortgagee:

(Wherever used herein the terms "mortgagor" and mortgagee" include all the parties to this instrument and the heirs, legal representatives and assigns of individuals, and the successors and assigns of corporations; and the term "note" includes all the notes herein described if more than one.)

Witnesseth, that for good and valuable considerations, and also in consideration of the aggregate sum named in the promissory note of even date herewith, hereinafter described, the mortgagor hereby grants, bargains, sells, aliens, remises, conveys and confirms unto the mortgagee all the certain land of which the mortgagor is now seized and in possession situate in St. Lucie County, Florida, viz:

Lots 26, 27 and 28 of Block A, WEST END ADDITION, a Subdivision, according to the plat thereof recorded in Plat Book 2, Page 5, of the Public Records of St. Lucie County, Florida. Subject to road right-of-way.

STATE OF FLORIDA
DOCUMENTARY STAMP TAX
DEPT OF REVENUE
156.00

156.00

RECEIVED $ 208.00 IN PAYMENT OF TAXES
ON INTANGIBLE PERSONAL PROPERTY,
PURSUANT TO SECTION 71-14, ACTS OF 1971
ROGER PELTAS
CLERK CIRCUIT COURT, ST. LUCIE CO., FLA. J.M.

OR BOOK 320 PAGE 2402

To Have and to Hold *the same, together with the tenements, hereditaments and appurtenances thereto belonging, and the rents, issues and profits thereof, unto the mortgagee, in fee simple.*

And *the mortgagor covenants with the mortgagee that the mortgagor is indefeasibly seized of said land in fee simple; that the mortgagor has good right and lawful authority to convey said land as aforesaid; that the mortgagor will make such further assurances to perfect the fee simple title to said land in the mortgagee as may reasonably be required; that the mortgagor hereby fully warrants the title to said land and will defend the same against the lawful claims of all persons whomsoever; and that said land is free and clear of all encumbrances* except taxes accruing subsequent to December 31, 1978.

Provided Always, *that if said mortgagor shall pay unto said mortgagee the certain promissory note hereinafter substantially copied or identified, to-wit:*

$ 104,000.00 Fort Pierce, Florida November 1, , 19 79

Beginning one month after date, I, we or either of us promise to pay to the order of

WILLIAM A. TAYLOR

One Hundred Four Thousand and No/100 ($104,000.00)---------- DOLLARS

for value received, payable at 2208 Cortez Boulevard, Fort Pierce, Florida

33450 with interest

from date at the rate of ten (10) per cent per annum until paid; interest payable see below

If default is made in any payment when due and continues for 30 days, then, at the option of the holder, and without any other notice, all the remaining balance shall be due and payable at once.

And each of us, whether maker, guarantor or endorser, hereby severally waives and renounces any and all homestead exemption rights we may have under the Constitution or Laws of the State of Florida, or any other State or United States, as against this note; and each further waives demand, notice of non-payment and protest, and in event it becomes necessary to collect this note through an attorney, agrees to pay all costs of collection, including reasonable attorney's fee.

This note may be prepaid in whole or in part at any time without penalty.

All sums in default shall bear interest at 10% per annum.

Beginning one month after date maker agrees to make successive monthly installments of $1,000.00 each month until the principal balance of $104,000.00 is fully paid. Each payment shall be first applied to interest and then to principal.

The tax required by Section 210.08 of the Florida Statutes has been paid and proper stamps have been affixed to the mortgage which secures the obligations evidenced by this note.

H & S CITRUS, INC.

By: David Walker, President

320 2403

and shall perform, comply with and abide by each and every the agreements, stipulations, conditions and covenants thereof, and of this mortgage, then this mortgage and the estate hereby created, shall cease, determine and be null and void.

And the mortgagor hereby further covenants and agrees to pay promptly when due the principal and interest and other sums of money provided for in said note and this mortgage, or either; to pay all and singular the taxes, assessments, levies, liabilities, obligations, and encumbrances of every nature on said property; to permit, commit or suffer no waste, impairment or deterioration of said land or the improvements thereon at any time; to keep the buildings now or hereafter on said land fully insured in a sum of not less than highest insurable value---------- in a company or companies acceptable to the mortgagee, the policy or policies to be held by, and payable to, said mortgagee, and in the event any sum of money becomes payable by virtue of such insurance the mortgagee shall have the right to receive and apply the same to the indebtedness hereby secured, accounting to the mortgagor for any surplus; to pay all costs, charges, and expenses, including lawyer's fees and title searches, reasonably incurred or paid by the mortgagee because of the failure of the mortgagor to promptly and fully comply with the agreements, stipulations, conditions and covenants of said note and this mortgage, or either; to perform, comply with and abide by each and every the agreements, stipulations, conditions and covenants set forth in said note and this mortgage or either. In the event the mortgagor fails to pay when due any tax, assessment, insurance premium or other sum of money payable by virtue of said note and this mortgage, or either, the mortgagee may pay the same, without waiving or affecting the option to foreclose or any other right hereunder, and all such payments shall bear interest from date thereof at the highest lawful rate then allowed by the laws of the State of Florida.

If any sum of money herein referred to be not promptly paid within thirty (30) days next after the same becomes due, or if each and every the agreements, stipulations, conditions and covenants of said note and this mortgage, or either, are not fully performed, complied with and abided by, then the entire sum mentioned in said note, and this mortgage, or the entire balance unpaid thereon, shall forthwith or thereafter, at the option of the mortgagee, become and be due and payable, anything in said note or herein to the contrary notwithstanding. Failure by the mortgagee to exercise any of the rights or options herein provided shall not constitute a waiver of any rights or options under said note or this mortgage accrued or thereafter accruing.

(CORPORATE SEAL)

In Witness Whereof the mortgagor has caused these presents to be executed in its name, and its corporate seal to be hereunto affixed, by its proper officers thereunto duly authorized, the day and year first above written.

ATTEST:.....
Secretary

H & S CITRUS, INC.

Signed, sealed and delivered in the presence of:

J. Stephen Feiney III

Carol C. Walker

By DAVID WALKER
President

State of FLORIDA
County of ST. LUCIE

I HEREBY CERTIFY that on this day, before me, an officer duly authorized in the State and County aforesaid to take acknowledgments, personally appeared

DAVID WALKER

well known to me to be the President and respectively of the corporation named as mortgagor in the foregoing instrument, and that they severally acknowledged executing the same, in the presence of two subscribing witnesses, freely and voluntarily under authority duly vested in them by said corporation and that the seal affixed thereto is the true corporate seal of said corporation.

WITNESS my hand and official seal in the County and State last aforesaid this 21st day of November A. D. 19 79.

466915

1979 DEC 21 PM 3:59

ROGER POREAU
CLERK OF CIRCUIT COURT

Carol C. Walker

NOTARY PUBLIC, State of Florida at Large.
My Commission Expires: 9-27-82

This instrument was prepared by

0220

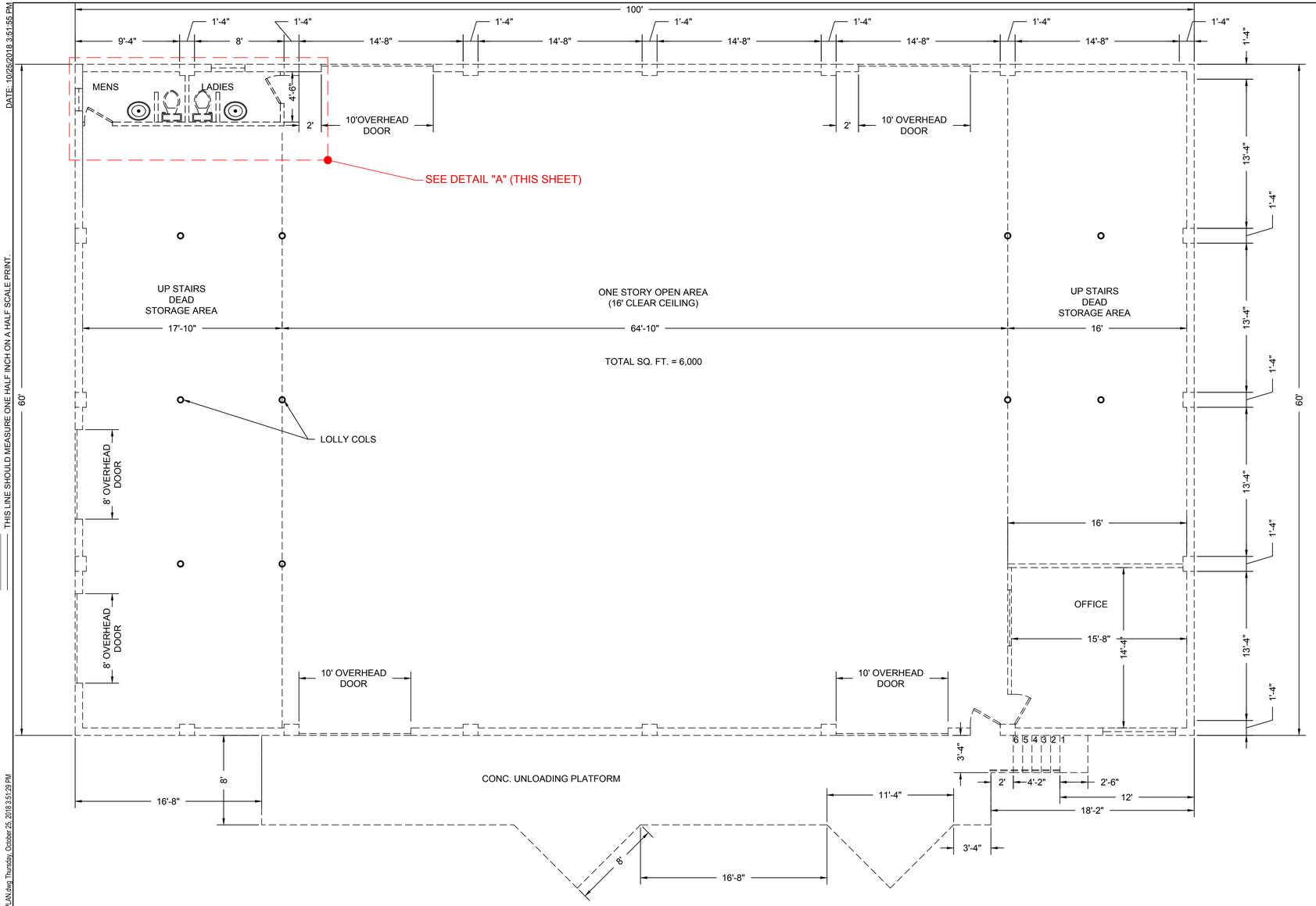

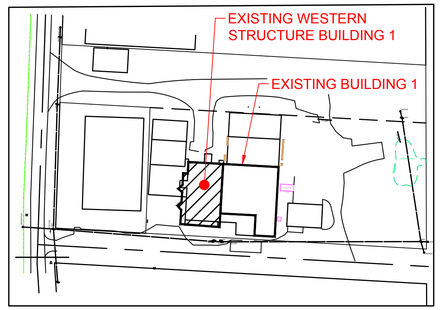

KEY MAP

NOTE:

THE EXISTING INFORMATION DEPICTED IN THIS PLAN IS A FACSIMILE FROM THE CHARLES B. Mc ADAM, CIVIL ENGINEER PLANS (DATED JUNE 1968) APPROVED AT THE TIME OF THE BUILDING'S ORIGINAL CONSTRUCTION. THE PROPOSED INFORMATION SHOWN ON THIS PLAN IS FOR SITE PLANNING PURPOSES ONLY AND IS NOT INTENDED FOR CONSTRUCTION.

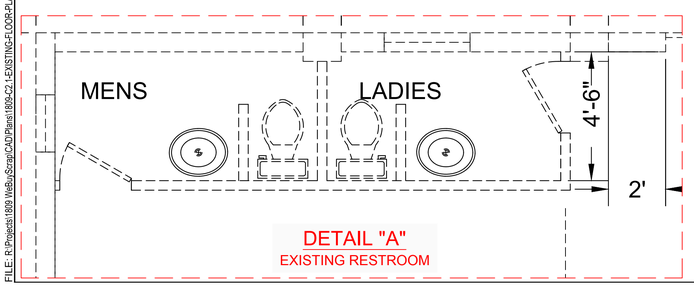

DETAIL "A"
EXISTING RESTROOM

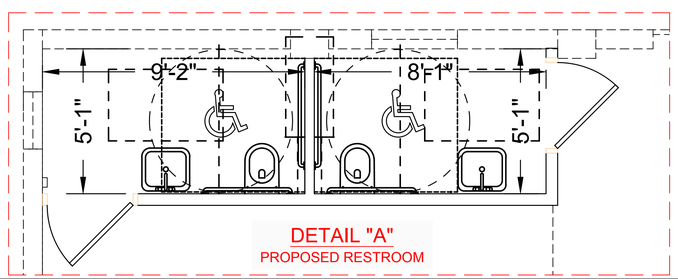

DETAIL "A"
PROPOSED RESTROOM

0 5' 10' 15'
SCALE IN FEET

REV. No.	DATE	DESCRIPTION

THIS ITEM HAS BEEN ELECTRONICALLY SIGNED AND SEALED BY JONATHAN T. RICKETTS, STATE OF FLORIDA, PROFESSIONAL ENGINEER, LICENSE NUMBER 38799 ON 10/25/2018 USING A DIGITAL SIGNATURE.

JTR
Jonathan T. Ricketts, Inc.
Consulting Engineers • Construction Managers
3450 Northlake Boulevard - Suite 200
Palm Beach Gardens, Florida 33403
Phone: (561) 630-6700
Toll - Free: (877) 630-6777
Fax: (561) 625-2770
FL Certificate of Authorization: 6173
NC Certificate of Authorization: C-2761

LAT 27° 24' 1" N
LON 80° 20 '14" W
FORT PIERCE

SITE PLAN APPROVAL FOR
WE BUY SCRAP
FLORIDA

MODIFICATIONS TO EXISTING BUILDING 1

PROJ. NO.: 1809
DRAWN BY: RC
SHEET:
C2.1

PRINTED COPIES OF THIS DOCUMENT ARE NOT CONSIDERED SIGNED AND SEALED AND THE SHA-1 AUTHENTICATION CODE MUST BE VERIFIED ON ANY ELECTRONIC COPIES

THIS LINE SHOULD MEASURE ONE HALF INCH ON A HALF SCALE PRINT.

DATE: 10/25/2018 3:51:55 PM

FILE: R:\Projects\1809 WeBuyScrap\CAD\Plans\1809-C2.1-EXISTING-FLOOR-PLAN.dwg Thursday, October 25, 2018 3:51:29 PM

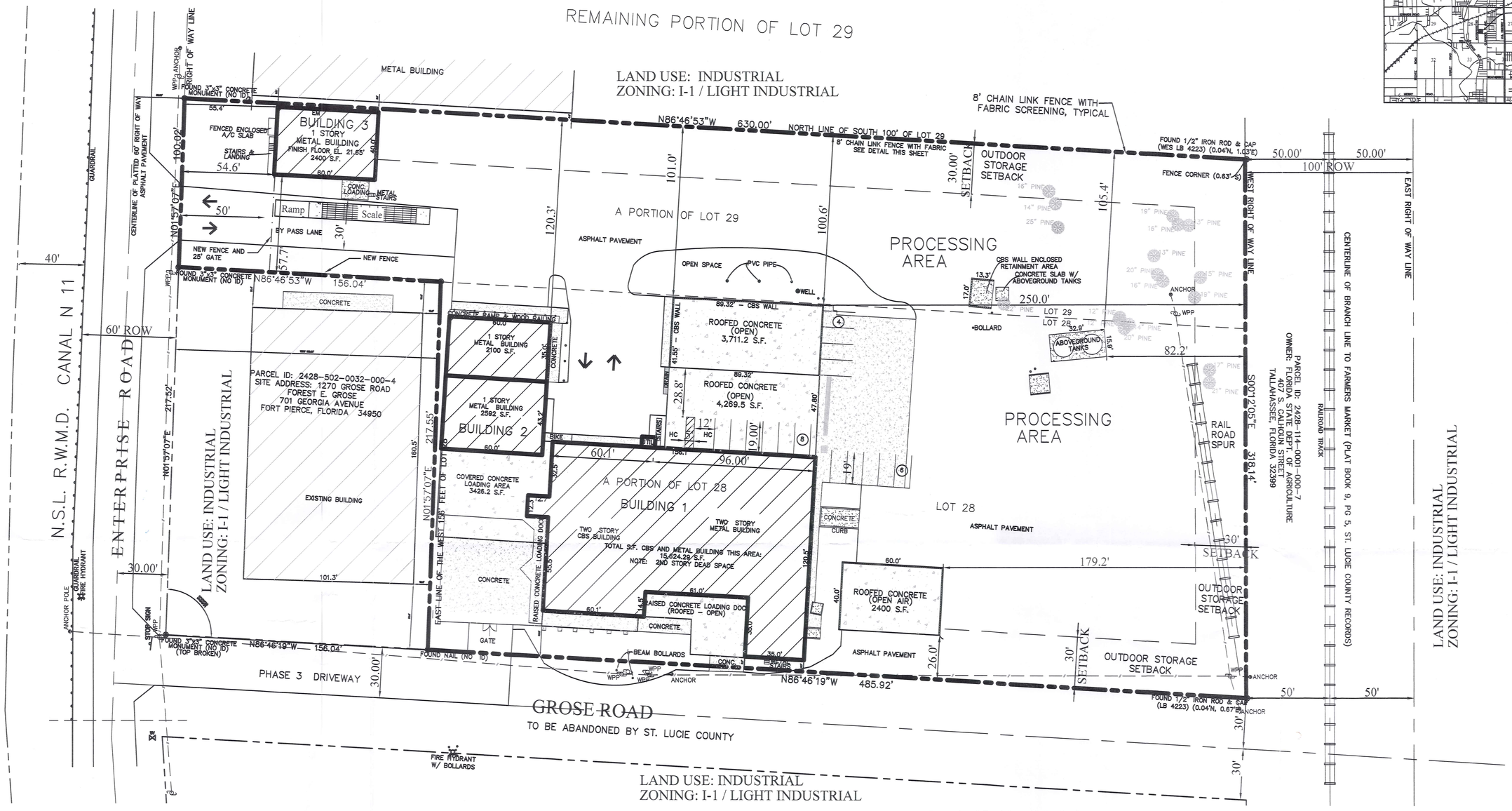

Required Parking Calculations

Phase I BUILDING 1 Warehouse	Square Feet 2,3076 s.f.	Parking Required 18 Spaces
Phase 2 BUILDING 2 Warehouse	Square Feet 4,680 s.f.	Parking Required 7 Spaces
		Parking Required 25 Spaces

OWNER:
WE BUY SCRAP
ERIC HELLEM, PRESIDENT
1141 OLD OKEECHOBEE ROAD
WEST PALM BEACH FL 33401

AGENT:
FROGNER CONSULTING, LLC
3402 SE CLUBHOUSE PL
STUART FL 34997
EMAIL: JFROGNER@COMCAST.NET

ENGINEER: JTR RICKETS, INC.
JONATHAN T. RICKETTS, INC.
PROFESSIONAL ENGINEER
3450 NORTHLAKE BLVD, SUITE 200
PALM BEACH GARDENA FL 33403
561-630-6700
EMAIL: JRICKETS@JTRINC.COM

SURVEYOR:
WATSON / KILLANE
SURVEYING AND MAPPING, INC.
2240 NE DIXIE HIGHWAY
JENSEN BEACH FL 34957
PHONE: 772-334-0868
EMAIL: WATSONKILLANE@GMAIL.COM

LANDSCAPE ARCHITECT:
DEBRA L. NORTHSEA
6008 EAGLES NEST DRIVE
JUPITER FL 33458
FLA REGISTRATION #1521
EMAIL: DLNLADESIGN@AOL.COM

Site Data

PROJECT NAME:	WE BUY SCRAP
PROJECT ADDRESS:	3340 ENTERPRISE ROAD, ST. LUCIE COUNTY, FORT PIERCE, FL 34950
PARCEL ID NUMBER:	2428-502-0033-0000-1
SEC/TOWN/RANGE:	28/35S/40E
EXISTING USE:	CITRUS PACKING PLANT
PROPOSED USE:	WASTE-RELATED USE, METAL RECYCLING
ZONING:	I-1 / LIGHT INDUSTRIAL
FUTURE LAND USE:	CITY OF FT. PIERCE INDUSTRIAL

	ACRES	S.F.	PERCENTAGE %
GROSS SITE AREA:	3.86 ACRES	168,000.86 S.F.	100 %
TOTAL IMPERVIOUS AREA:	2.1 ACRES	91,683.5 S.F.	54.6%
BUILDING COVERAGE: BUILDINGS: 22,716.29 S.F. ROOFED AREAS: 13,806.9 S.F.	.84 ACRES	36,523.2 S.F.	21.7%
PAVEMENT AND SIDEWALK:	1.26 ACRES	55,160.26 S.F.	32.8%
TOTAL PERVIOUS AREA:	1.76 ACRES	76,317.36 S.F.	45.4%

TOTAL BUILDING HEIGHT: 35'

PARKING DATA:
REQUIRED: 1 SPACE PER 600 S.F. PER WAREHOUSE (SEE CHART)

TOTAL SPACES REQUIRED: 25 SPACES
TOTAL SPACES PROVIDED: SEE PHASING CHART THIS SHEET
INCLUDES 2 H/C SPACES
TOTAL BIKE RACK PROVIDED: 1 RACK / 6 BIKES

Debra L. Northsea
Landscape Architect
6008 Eagles Nest Drive
Jupiter, FLorida 33458
Phone: (561-758-6739)
Fla. Registration #1521
Email: DLNLADESIGN@aol.com

WE BUY SCRAP
Site Plan
City of Fort Pierce

Job Name: WE BUY SCRAP
CADD File: WE BUY SCRAP SP8.DWG

Date	Drawn By	Comments
07.25.18	DLN	Preliminary Site Plan
08.03.18	DLN	Final Site Plan
08.18.18	DLN	Final Site Plan
10.26.18	DLN	Final Site Plan
11.23.18	DLN	Final Site Plan REV
11.28.18	DLN	Final Site Plan REV
01.10.19	DLN	REV FENCE AND GATE
01.22.19	DLN	REV FENCE AND GATE

In Conjunction with:

Frogner Consulting, Inc.
3402 SE Club House Place
Stuart, FLorida 34997
Phone: (561-386-3035)
Email: jfrogner@comcast.net

Scale: 1"=30'-0"
0' 15' 30' 60'

ENTRY LANDSCAPE SCALE: 1'=20'

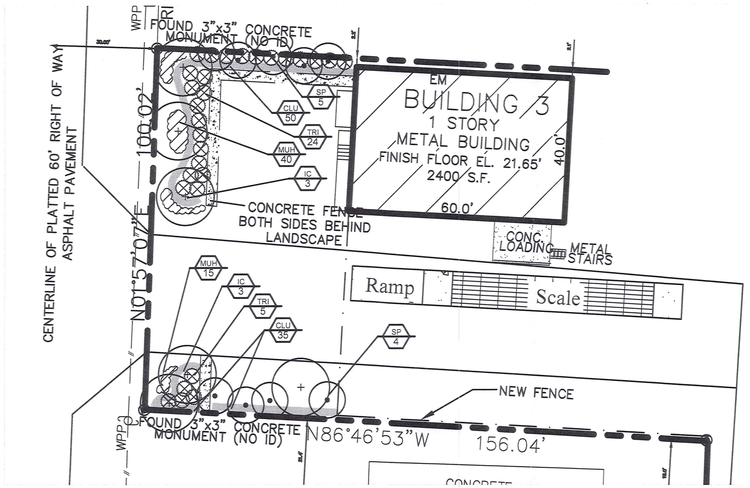

PLANT LIST

• IC	6	DAHOON HOLLY	Ilex cassine	12' to 14' HT., BY 6–8' SPRD., FULL TO BASE
• SP	9	SABAL PALMS	Sabal palmetto	15'–18' O.A. HT.
• CLU	85	CLUSIA	Clusia rosea	36" HT., X 24" SPRD., full; 24" o.c.
• TRI	29	DWARF FAKAHATCHEE GRASS	Tripsacum floridana	18" HT., X 15" SPRD., full 3 gal., 18–24" o.c.
• MUH	55	MUHLY GRASS	Muhlenbergia capillaris	24" HT., X 24"" SPRD., full 3 gal., 18–24" o.c.

• NATIVE

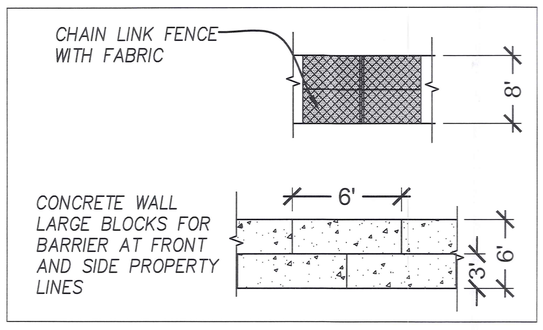

WE BUY SCRAP

Site Plan Details

City of Fort Pierce

Debra L. Northsea
Landscape Architect
6008 Eagles Nest Drive
Jupiter, FLorida 33458
Phone: (561-758-6739)
Fla. Registration #1521
Email: DLNLADESIGN@aol.com

Job Name: WE BUY SCRAP
CADD File: WE BUY SCRAP SP6.DWG

Date	Drawn By	Comments
07.25.18	DLN	Preliminary Site Plan
08.03.18	DLN	Final Site Plan
09.18.18	DLN	Final Site Plan
10.26.18	DLN	Final Site Plan
11.23.18	DLN	Final Site Plan REV
11.28.18	DLN	Final Site Plan REV
01.10.19	DLN	ADD FENCE&GATE

In Conjunction with:

Frogner Consulting, Inc.
3402 SE Club House Place
Stuart, FLorida 34997
Phone: (561-386-3035)
Email: jfrogner@comcast.net

Scale: 1"=30'–0"

0' 15' 30' 60'

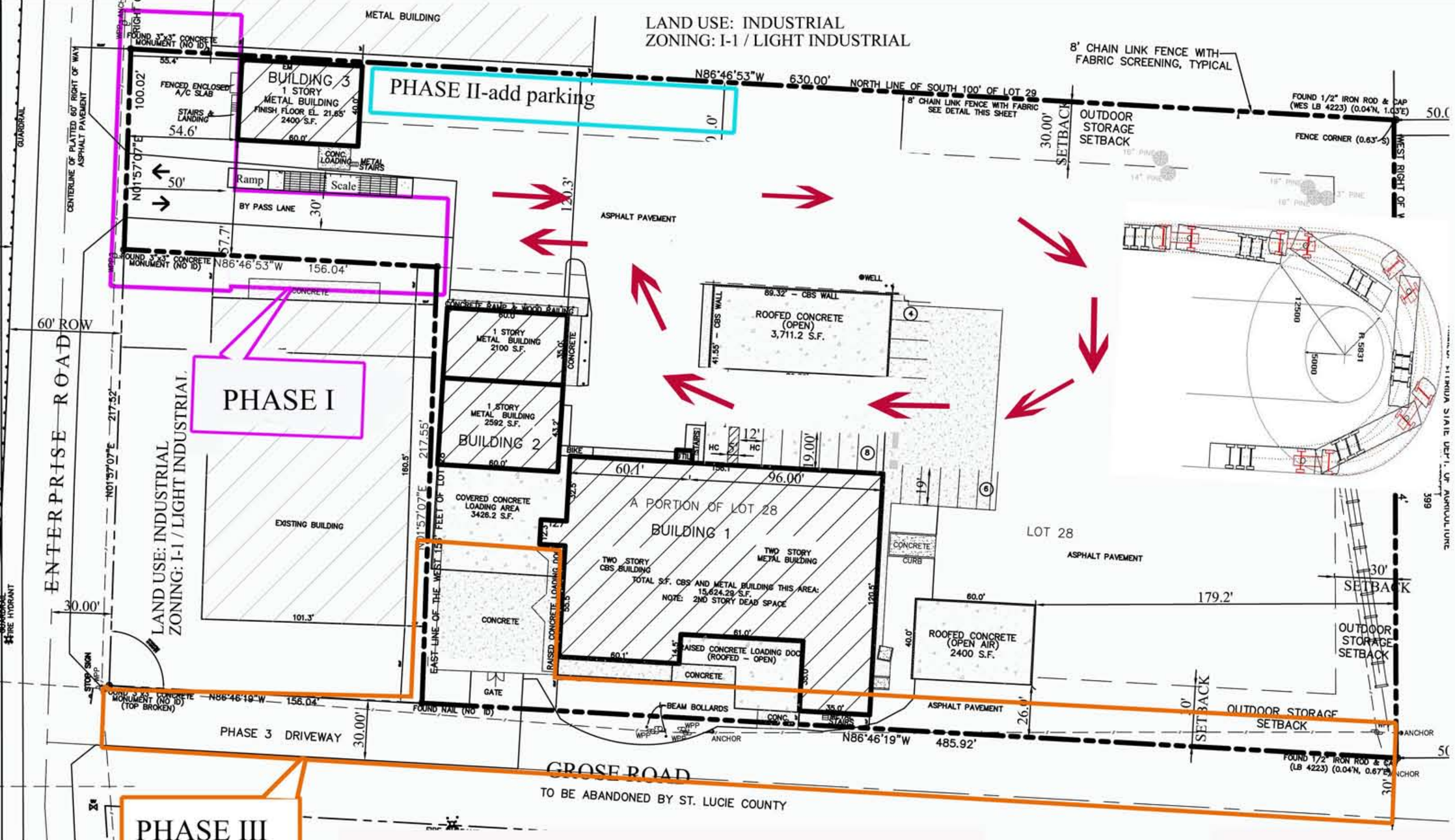
LAND USE: INDUSTRIAL
ZONING: I-1 / LIGHT INDUSTRIAL
PHASE II-add parking
PHASE I
PHASE III
BUILDING 3
1 STORY
METAL BUILDING
FINISH FLOOR EL. 21.65'
2400 S.F.
BUILDING 2
1 STORY
METAL BUILDING
2592 S.F.
BUILDING 1
TWO STORY
METAL BUILDING
TWO STORY
CBS BUILDING
TOTAL S.F. CBS AND METAL BUILDING THIS AREA:
15,624.29 S.F.
NOTE: 2ND STORY DEAD SPACE
ROOFED CONCRETE
(OPEN)
3,711.2 S.F.
ROOFED CONCRETE
(OPEN AIR)
2400 S.F.
COVERED CONCRETE
LOADING AREA
3426.2 S.F.
EXISTING BUILDING
1 STORY
METAL BUILDING
2100 S.F.
ENTERPRISE ROAD
60' ROW
GROSE ROAD
TO BE ABANDONED BY ST. LUCIE COUNTY
PHASE 3 DRIVEWAY
LOT 28
A PORTION OF LOT 28
ASPHALT PAVEMENT
OUTDOOR
STORAGE
SETBACK
30.00'
8' CHAIN LINK FENCE WITH
FABRIC SCREENING, TYPICAL
8' CHAIN LINK FENCE WITH FABRIC
SEE DETAIL THIS SHEET
N86°46'53"W 630.00'
NORTH LINE OF SOUTH 100' OF LOT 29
FOUND 1/2" IRON ROD & CAP
(WES LB 4223) (0.04'N, 1.03'E)
FENCE CORNER (0.63'S)
WEST RIGHT OF W
BY PASS LANE
Ramp
Scale
CONC. LOADING
METAL STAIRS
FENCED ENCLOSED
A/C SLAB
STAIRS & LANDING
CONCRETE RAMP & WOOD RAILING
CONCRETE
BIKE
RAISED CONCRETE LOADING DOCK
CONCRETE CURB
BEAM BOLLARDS
GATE
STOP SIGN
FIRE HYDRANT
WELL
89.32' - CBS WALL
41.55' - CBS WALL
FOUND 3"x3" CONCRETE MONUMENT (NO ID)
FOUND NAIL (NO ID)
ANCHOR
N86°46'19"W 485.92'
N86°46'19"W 156.04'
N86°46'53"W 156.04'
N01°57'07"E 217.52'
N01°57'07"E 217.55'
EAST LINE OF THE WEST 15 FEET OF LOT 28
LAND USE: INDUSTRIAL
ZONING: I-1 / LIGHT INDUSTRIAL
CENTERLINE OF PLATTED 60' RIGHT OF WAY
ASPHALT PAVEMENT
GUARDRAIL
METAL BUILDING
CONCRETE
CURB
HC
12'
19.00'
96.00'
60.4'
179.2'
156.1'
120.3'
67.7'
100.02'
54.6'
50'
30'
26.7'
SETBACK
FLORIDA STATE DEPT. OF AGRICULTURE

LEGEND:
ID = IDENTIFICATION
NAVD = NORTH AMERICAN VERTICAL DATUM
EL. = ELEVATION
x 0.00' = SPOT ELEVATION
BFP = BACKFLOW PREVENTOR VALVE
A/C = AIR CONDITIONER
CONC. = CONCRETE
(P) = PLAT
(M) = MEASURED
CMP = CORRUGATE METAL PIPE
WPP = WOOD POWER POLE
-//- = OVERHEAD UTILITIES

PARCEL ID: 2428-502-0034-000-8
SITE ADDRESS: 3338 ENTERPRISE ROAD
EQUITY TRUST COMPANY
116685 IRA
2429 SE PINIERO ROAD
PORT ST. LUCIE, FLORIDA 34952

REMAINING PORTION OF LOT 29

ENTERPRISE ROAD

RIGHT OF WAY LINE

METAL BUILDING

FOUND 3"x3" CONCRETE MONUMENT (NO ID)

FENCED ENCLOSED A/C SLAB

STAIRS & LANDING

1 STORY METAL BUILDING FINISH FLOOR EL. 21.95'

CONC. LOADING

METAL STAIRS

6' CHAIN LINK FENCE / BARBED WIRE

FENCE CORNER (0.89' S)

N86°46'53"W 630.00'

NORTH LINE OF SOUTH 100' OF LOT 29

6' CHAIN LINK FENCE / BARBED WIRE

FOUND 1/2" IRON ROD & CAP (WES LB 4223) (0.04'N, 1.03'E)

FENCE CORNER (0.63' S)

WEST RIGHT OF WAY LINE

EAST RIGHT OF WAY LINE

CENTERLINE OF PLATTED 80' RIGHT OF WAY

ASPHALT PAVEMENT

GUARDRAIL

N01°45'07"E 100.69'

A PORTION OF LOT 29

BROKEN ASPHALT PAVEMENT

GATE

SOUTH 100.00'

PVC PIPE

WELL

CBS WALL ENCLOSED RETAINMENT AREA

CONCRETE SLAB W/ ABOVEGROUND TANKS

FOUND 3"x3" CONCRETE MONUMENT (NO ID)

N86°46'53"W 156.04'

CONCRETE

CONCRETE RAMP & WOOD RAILING

WEST 156.00'

PARCEL ID: 2428-502-0032-000-4
SITE ADDRESS: 1270 GROSE ROAD
FOREST E. GROSE
701 GEORGIA AVENUE
FORT PIERCE, FLORIDA 34950

1 STORY METAL BUILDING

LESSED OUT PORTION

EXISTING BUILDING

N01°57'07"E 217.55'

EAST LINE OF THE EAST 156 FEET OF LOT 28

10" PIPE

ROOFED CONCRETE (OPEN)

89.32' CBS WALL

41.56' CBS WALL

BATH ROOM

UTIL

LOT 28

A PORTION OF LOT 28

COVERED CONCRETE LOADING AREA

TWO STORY CBS BUILDING

TWO STORY METAL BUILDING

RAISED CONCRETE LOADING DOCK

CONCRETE CURB

BROKEN ASPHALT PAVEMENT

CBS WALL

ROOFED CONCRETE (OPEN AIR)

GATE

CHAIN LINK FENCE

FENCE CORNER (1.06' W)

ASPHALT

I-BEAM BOLLARDS

CONC. METAL STAIRS

EDGE OF BROKEN ASPHALT PAVEMENT

TOP OF BANK

RETENTION AREA

S00°12'05"E 318.14'

PARCEL ID: 3428-114-0001-000-7
OWNER: FLORIDA STATE DEPT. OF AGRICULTURE
407 S. CALHOUN STREET
TALLAHASSEE, FLORIDA 32399

CENTERLINE OF BRANCH LINE TO FARMERS MARKET (PLAT BOOK 9, PG 5, ST. LUCIE COUNTY RECORDS)

RAILROAD TRACK

ANCHOR POLE

GUARDRAIL

FIRE HYDRANT

STOP SIGN

9"x18"x9" (0.1' RISE/FT)

FOUND 3"x3" CONCRETE MONUMENT (NO ID) (TOP BROKEN)

N86°46'19"W 156.04'

FOUND NAIL (NO ID)

BROKEN ASPHALT PAVEMENT

N86°46'19"W 485.92'

BROKEN ASPHALT/DIRT/GRAVEL PAVEMENT

FOUND 1/2" IRON ROD & CAP (LB 4223) (0.04'N, 0.67'E)

GROSE ROAD

PLATTED AS 'ROAD'

CENTERLINE OF PLATTED 80' RIGHT OF WAY

FIRE HYDRANT W/ BOLLARDS

LOT 27

PARCEL ID: 2428-502-0029-000-0
SITE ADDRESS: 3402 ENTERPRISE ROAD
SOUTHERN BELL TELEPHONE
PO BOX 7207
BEDMINSTER, NJ 07921

BOUNDARY and TOPOGRAPHIC SURVEY

SITE ADDRESS:
3340 ENTERPRISE ROAD
FORT PIERCE, FLORIDA 34954
AND
1237 GROSE ROAD
FORT PIERCE, FLORIDA 34954

GRAPHIC SCALE

30 0 15 30 60 120

(IN FEET)
1 inch = 30 ft.

LEGAL DESCRIPTION:

LOT 28, LESS THE WEST 156.00 FEET THEREOF, OF THE PLAT ENTITLED "INDUSTRIAL SUBDIVISION", PLAT BOOK 9, PAGE 5 OF THE PUBLIC RECORDS OF ST. LUCIE COUNTY, FLORIDA.
TOGETHER WITH
THE SOUTHERLY 100 FEET OF LOT 29, INDUSTRIAL SUBDIVISION, ACCORDING TO THE PLAT THEREOF, AS RECORDED IN PLAT BOOK 9, PAGE 5, OF THE PUBLIC RECORDS OF ST. LUCIE COUNTY, FLORIDA.

SURVEYOR'S NOTES:

1. NO ATTEMPT WAS MADE BY THIS FIRM TO LOCATE UNDERGROUND UTILITIES ON/OR ADJACENT TO THIS SITE. THE APPROXIMATE LOCATION OF ALL UTILITIES SHOWN HEREON WERE TAKEN FROM ASBUILT DRAWINGS AND/OR ON-SITE LOCATION AND SHOULD BE VERIFIED BEFORE CONSTRUCTION.
2. NO ATTEMPT WAS MADE BY THIS FIRM TO LOCATE UNDERGROUND FOOTINGS OF BUILDINGS OR FENCES ON OR ADJACENT TO THIS SITE.
3. LANDS SHOWN HEREON WERE NOT ABSTRACTED FOR EASEMENTS AND/OR RIGHTS OF WAY OF RECORD EXCEPT AS SHOWN ON THE RECORD PLAT IF ANY.
4. THIS PROPERTY WAS SURVEYED WITHOUT THE BENEFIT OF A TITLE SEARCH.
5. ALL ELEVATIONS SHOWN ARE BASED ON NORTH AMERICAN VERTICAL DATUM 1988 (NAVD 88). ST. LUCIE COUNTY BENCHMARK: NAME - BOX-CUT FARMERS MARKET, ELEVATION 17.994' (NAVD 88)
6. THE BEARING BASE OF THIS SURVEY IS ALONG THE EAST RIGHT OF WAY LINE OF ENTERPRISE ROAD, N01°57'07"E, BASED ON FLORIDA STATE PLANE COORDINATED SYSTEM EAST ZONE, 83/90 ADJUSTMENT.
7. LEGAL DESCRIPTION FURNISHED BY CLIENT.
8. ALL BEARINGS AND DISTANCES SHOWN ARE PLAT AND MEASURED UNLESS OTHERWISE NOTED.
9. ADDITIONS OR DELETIONS TO SURVEY MAPS OR REPORTS BY OTHER THAN THE SIGNING PARTY OR PARTIES IS PROHIBITED WITHOUT WRITTEN CONSENT OF THE SIGNING PARTY OR PARTIES.
10. THIS SITE LIES IN FLOOD ZONE 'X' AS SCALED AND INTERPOLATED ON FEMA MAP NO. 12111C-0189-J, DATED: FEBRUARY 16, 2012.
11. SITE AREA: 168000.86 SQUARE FEET OR 3.86 ACRES MORE OR LESS.

SURVEYOR'S CERTIFICATION:

I HEREBY CERTIFY THAT THIS SURVEY MAP AND/OR REPORT WAS PREPARED UNDER MY RESPONSIBLE CHARGE AND MEETS THE STANDARDS OF PRACTICE AS SET FORTH BY THE FLORIDA BOARD OF PROFESSIONAL SURVEYORS AND MAPPERS IN CHAPTER 5J-17, FLORIDA ADMINISTRATIVE CODE AND THAT IT IS TRUE AND CORRECT TO THE BEST OF MY KNOWLEDGE AND BELIEF. SURVEY MAP AND REPORT OR THE COPIES THEREOF ARE NOT VALID WITHOUT THE SIGNATURE AND THE ORIGINAL RAISED SEAL OF A FLORIDA LICENSED SURVEYOR AND MAPPER.

CRAIG D. WATSON
PROFESSIONAL SURVEYOR & MAPPER
NO. 5647 STATE OF FLORIDA

DATE	REVISIONS	DWG	CHK

PREPARED FOR:
WE BUY SCRAP, INC.

WATSON | KILLANE
SURVEYING AND MAPPING, INC.
2240 NE DIXIE HIGHWAY - JENSEN BEACH, FLORIDA 34957
PHONE 772-334-0868 - EMAIL: WATSONKILLANE@GMAIL.COM
LICENSED BUSINESS NO. 8241

JOB NUMBER:	18-550
FIELD DATE:	8-27-18
CHECKED BY:	CDW
DRAWN BY:	DPK
SCALE:	1"= 30'
SHEET	1 OF 1

Michelle Franklin, CFA -- Saint Lucie County Property Appraiser -- All rights reserved.

Property Identification

Site Address: 3340 ENTERPRISE RD	Parcel ID: 2428-502-0035-000-5	Account #: 32241	Sec/Town/Range: 28/35S/40E
Map ID: 24/28S	Zoning: IL	Use Type: 4100	Jurisdiction: Fort Pierce

Ownership

George B Brown
Robert E Derry
Lois S Derry

PO Box 1478
Fort Pierce, FL 34954

Legal Description

INDUSTRIAL S/D SLY 100 FT OF LOT29 (1.46 AC) (OR 712-1970; 3612-657)

Current Values

Just/Market:	$212,900	Assessed:	$212,900
Exemptions:	$0	Taxable:	$212,900

Historical Values 3-year

Year	Just/Market	Assessed	Exemptions	Taxable
2018	$212,900	$212,900	$0	$212,900
2017	$196,600	$196,600	$0	$196,600
2016	$189,800	$189,800	$0	$189,800

Sale History

Date	Book/Page	Sale Code	Deed	Grantor	Price
03-05-2014	3612 / 0657	0116	WD	Cemer John S	$40,000
10-19-1990	0712 / 1970	XX00	WD	David L Walker	$100,000
03-01-1978	0283 / 2790	XX00	CV		$52,500

Primary Building Information

Finished Area of this building: 2,400 SF
Gross Area of this building: 2,400 SF

Exterior Data

View:	Roof Cover: Metal	Roof Structure: Steel Truss	Building Type: INDW
Year Built: 1967	Frame:	Grade: Y_D+	Effective Year: 1977
Primary Wall: Corr Metal	Story Height: 1 Story	No. Units: 1	Secondary Wall: Conc Block

Interior Data

Bedrooms: 0	A/C %: N/A%	Electric: MAXIMUM	Primary Int Wall:
Full Baths: 0	Heated %: 0%	Heat Type:	Avg Hgt/Floor: 0
Half Baths: 0	Sprinkled %: 100%	Heat Fuel:	Primary Floors: CONC GRD





Total Areas

Finished/Under Air (SF):	2,400
Gross Area (SF):	2,400
Land Size (acres):	1.46
Land Size (SF):	63,597.6
Total Building Count:	1

Special Features and Yard Items

Type	Qty	Units	Year Blt
LOADING DOCK	1	240	1967

This information is believed to be correct at this time but it is subject to change and is not warranted.
© Copyright 2018 Saint Lucie County Property Appraiser. All rights reserved.

Michelle Franklin, CFA -- Saint Lucie County Property Appraiser -- All rights reserved.

Property Identification

Site Address: 1237 GROSE RD	Parcel ID: 2428-502-0033-000-1	Account #: 32239	Sec/Town/Range: 28/35S/40E
Map ID: 24/28S	Zoning: IL	Use Type: 4400	Jurisdiction: Fort Pierce

Ownership

H and S Citrus Inc
PO Box 1616
Fort Pierce, FL 34954

Legal Description

INDUSTRIAL S/D LOT 28-LESS W 156FT- (2.42 AC) (OR 205-1297: 256-175)

Current Values

Just/Market:	$789,100	Assessed:	$742,500
Exemptions:	$0	Taxable:	$742,500

Historical Values 3-year

Year	Just/Market	Assessed	Exemptions	Taxable
2018	$789,100	$742,500	$0	$742,500
2017	$675,000	$675,000	$0	$675,000
2016	$780,900	$780,900	$0	$780,900

Sale History

Date	Book/Page	Sale Code	Deed	Grantor	Price
08-09-1976	0256 / 0175	XX01	WD	H and S Citrus Inc	$0
08-14-1972	0205 / 1297	XX01	WD	H and S Citrus Inc	$0

Primary Building Information

Finished Area of this building: 18,576 SF
Gross Area of this building: 24,217 SF

Exterior Data

View:	Roof Cover: Metal	Roof Structure: BarJst/Rigid	Building Type: INDP
Year Built: 1972	Frame:	Grade: Y_D	Effective Year: 1972
Primary Wall: Conc Block	Story Height: 1 Story	No. Units: 2	Secondary Wall: Corr Metal

Interior Data

Bedrooms: 0	A/C %: 10%	Electric: MAXIMUM	Primary Int Wall:
Full Baths: 0	Heated %: 10%	Heat Type: FrcdHotAir	Avg Hgt/Floor: 0
Half Baths: 0	Sprinkled %: 100%	Heat Fuel: ELEC	Primary Floors: CONC GRD



Image or Sketch unavailable for display

Total Areas

Finished/Under Air (SF):	23,076
Gross Area (SF):	28,717
Land Size (acres):	2.42
Land Size (SF):	105,415.2
Total Building Count:	3

Special Features and Yard Items

Type	Qty	Units	Year Blt
CHAINLINK 6'	1	477	1976
STORAGE BIN	1	360	1976
MEZZANINE	1	1860	1976
BARB WIRE	1	477	1976

This information is believed to be correct at this time but it is subject to change and is not warranted.
© Copyright 2018 Saint Lucie County Property Appraiser. All rights reserved.

Jonathan T. Ricketts, Inc. 3450 Northlake Boulevard, #200, Palm Beach Gardens, FL 33403
Phone: (561) 630-6700 Fax: (561) 625-2770 Toll Free (877) 630-6777 FL CA Lic. #6173 NC Lic. #C-2761

DRAINAGE STATEMENT

Prepared for
We Buy Scrap
Located on
A Portion of Lot 28 and 29 of the Plat of
Industrial Subdivision, Plat Book 9, Page 5
St. Lucie County, FL
Section 28, Township 35 South, Range 40 East
September 26, 2018

This project consists of a change in ownership for the existing warehouse buildings and adjacent asphalt areas for the property located on the above-mentioned property in St. Lucie County. The project consists of two lots whose addresses are 3340 Enterprise Road and 1237 Grose Road, Fort Pierce, Florida. The property presently serves as a packing facility for agricultural produce and was established in 1972. The property is shown on the National Flood Insurance Rate Map, 12111C0189J and has an effective date of 02/16/2012 and is within Zone X or Area of Minimal Flooding.

The proposed use will be for receiving scrap metals for sorting, packaging, and shipping to various metal recyclers. The existing site presently drains east and flows into the existing railroad right-of-way owned by the Florida State Department of Agriculture. No additional increases in buildings or asphalt or other impervious areas are anticipated; therefore, there will be no changes to the existing historic drainage flows or patterns.

9-26-2018

Jonathan T. Ricketts
FL. P.E. License No. 38799
FL. CA. License No. 6173

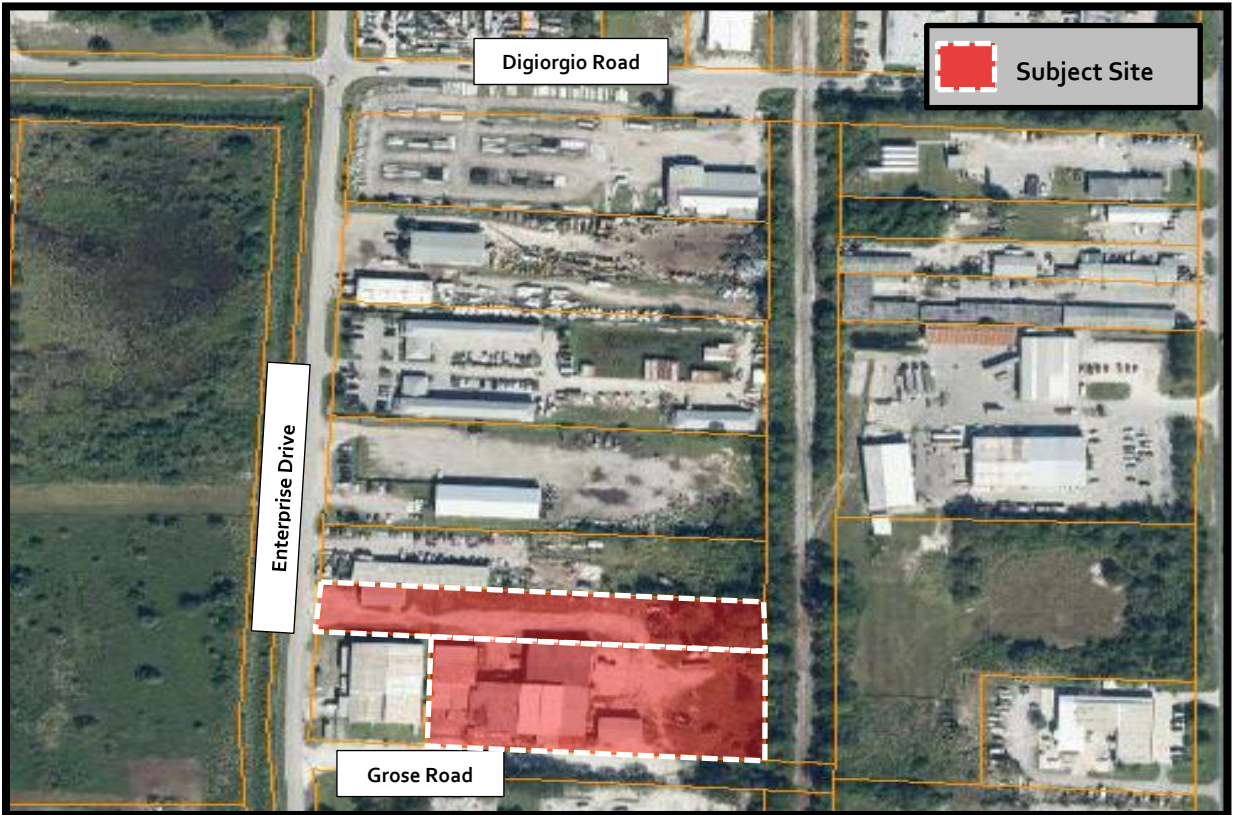

THE SUNRISE CITY
FORT PIERCE
Florida

Conditional Use
We Buy Scrap
Aerial Map

N
W E
S

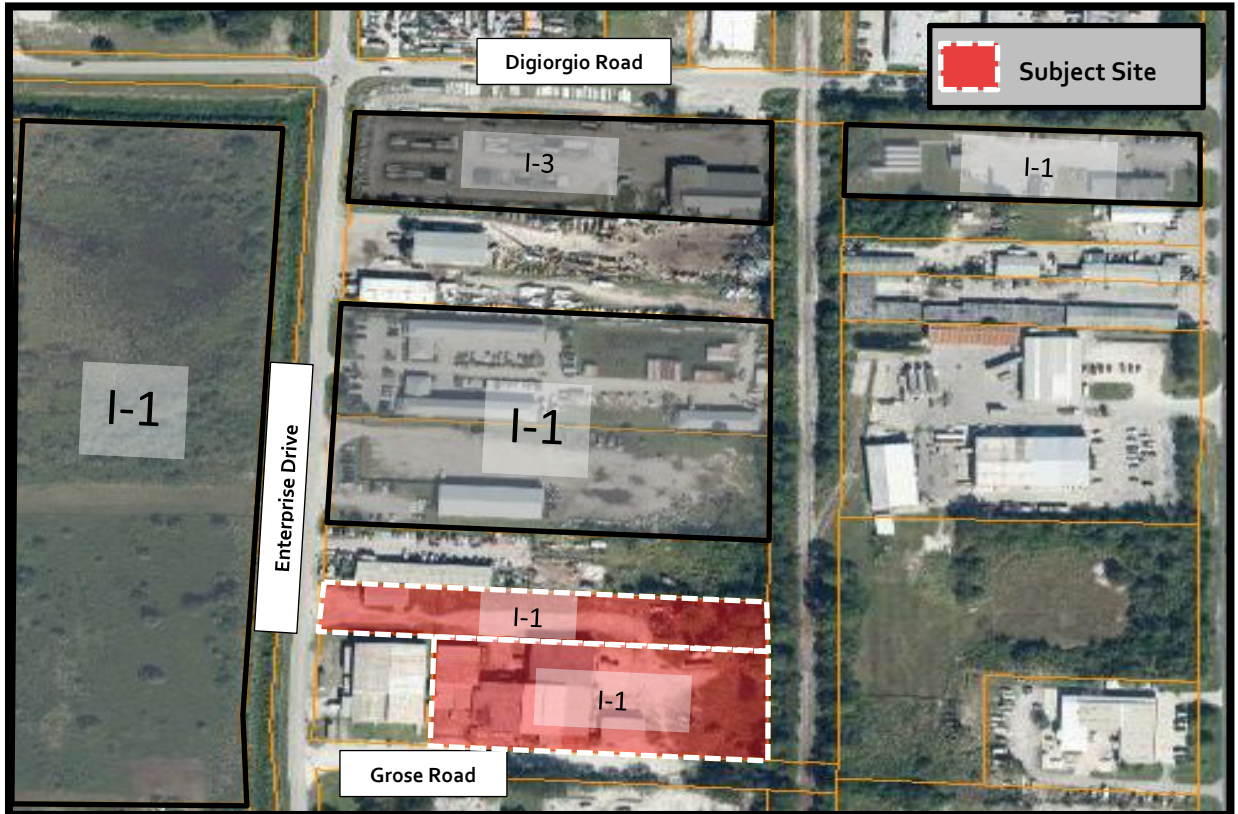

THE SUNRISE CITY
FORT PIERCE
Florida

Application for Conditional Use
We Buy Scrap
Zoning Map

N
W E
S

January 25, 2019

JUSTIFICATION OF REQUEST
CODE OF ORDINANCES CHAPTER 22 – ZONING

Section 22-60 – Off-street parking and loading (22-60.(a)(3) – Unlisted Uses - requires a statement of special reason and reliable data for the basis of establishing a different minimum parking requirement for which no parking ratio is established in the Ft. Pierce Code of Ordinances.

Introduction

Frogner Consulting, LLC ("Agent"), on behalf of the applicant, WEBUYSCRAP, respectfully requests your approval of this application to allow the reduction of parking as presented in this letter.

Currently, the subject property supports a Future Land Use Atlas designation of Industrial and falls within the I-1 Industrial zoning district.

Summary

The proposed recycling facility parking calculation upon completion of the pre application meeting, was deemed most comparable to "warehouse" in the city's off-street parking regulations. With over 25,000 square feet of warehouse, the requirement for 1 parking space per 600/sq ft mandated **51 parking spaces.**

Operations of the facility will require no more than **15 employees** including office personnel. Additionally, the typical operation of this type of facility (metal recycling yard) allows commercial vehicle traffic to off-load scrap metal while the driver stays in the vehicle. Thus the requirement of 51 parking spaces is excessive. The applicant has consulted with Pinder Troutman Transportation Engineers to review the parking demand. A traffic study was not required for the conditional use approval, however, Pinder-Troutman produced parking data from the Institute of Transportation Engineers (4th Edition) that compares Manufacturing and Warehousing data in the most recent edition (there is no data in the handbook for junkyards). Staff review of the data furnished will show the 33rd Percentile requires 0.88 vehicles per employee (manuf) and 0.81 vehicles per employee (warehousing). Using these figures, only 12 parking spaces are necessary. Further, the fact that commercial vehicle drivers do not exit the vehicle, the requirement that 51 parking spaces on site is excessive as the Planning Board noted. Thus the applicant has modified the site plan to reflect a more moderate parking requirement of 25 spaces.

Based on the documents provided, the applicant respectfully requests the reduced parking ratio be approved by the Planning Director as allowed in the city code.

Frogner Consulting, Inc. Planning and Zoning Consultants
3402 SE Clubhouse Place Stuart FL 34997
Ph: (561) 386-3035 jfrogner@comcast.net

Land Use: 150
Warehousing

Description

Warehouses are primarily devoted to the storage of materials, but they may also include office and maintenance areas.

Database Description

The database consisted of sites that were located in suburban areas.

- Average parking supply ratios: 0.5 spaces per 1,000 square feet (sq. ft.) gross floor area (GFA) and 1.0 space per employee (13 study sites).
- Average site employment density: 4,100 sq. ft. GFA per employee (13 study sites).

The study sites consisted of a grocery store distribution warehouse, Internet-business warehouses, paper supplier warehouses and transfer and storage companies.

The following table presents a time-of-day distribution of parking demand for 10 study sites.

Based on Vehicles per 1,000 sq. ft. GFA	***Weekday***	
Hour Beginning	Percent of Peak Period	Number of Data Points*
12:00–4:00 a.m.	–	0
5:00 a.m.	–	0
6:00 a.m.	–	0
7:00 a.m.	–	0
8:00 a.m.	71	10
9:00 a.m.	92	10
10:00 a.m.	100	10
11:00 a.m.	99	10
12:00 p.m.	88	10
1:00 p.m.	–	0
2:00 p.m.	–	0
3:00 p.m.	–	0
4:00 p.m.	–	0
5:00 p.m.	–	0
6:00 p.m.	–	0
7:00 p.m.	–	0
8:00 p.m.	–	0
9:00 p.m.	–	0
10:00 p.m.	–	0
11:00 p.m.	–	0

* Subset of database

For eight of the study sites, data were also collected for trucks parked at the site. The average truck parking demand ratio was 0.11 trucks per 1,000 sq. ft. GFA with a range between 0.04 and 0.25 trucks per 1,000 sq. ft. GFA.

Land Use: 140
Manufacturing

Average Peak Period Parking Demand vs. Employees
On a: Weekday

Statistic	Peak Period Demand
Peak Period	2:00–3:00 p.m.
Number of Study Sites	3
Average Size of Study Sites	160 employees
Average Peak Period Parking Demand	0.97 vehicles per employee
Standard Deviation	0.24
Coefficient of Variation	24%
Range	0.75–1.22 vehicles per employee
85th Percentile	1.14 vehicles per employee
33rd Percentile	0.88 vehicles per employee

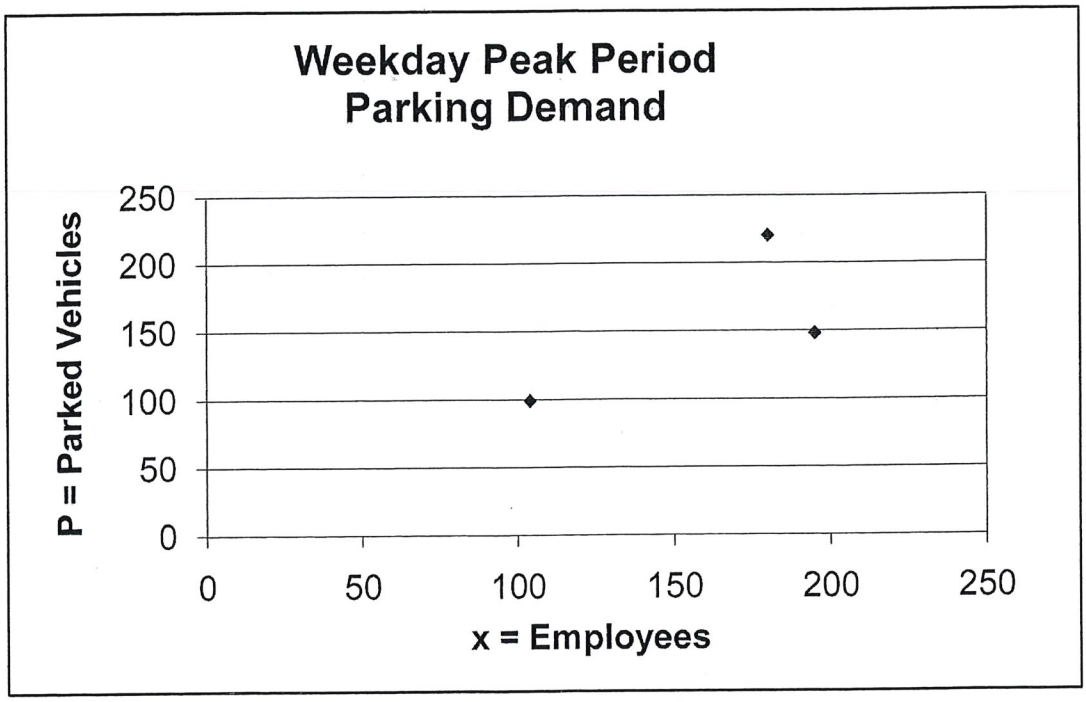

Land Use: 150
Warehousing

Average Peak Period Parking Demand vs. 1,000 sq. ft. GFA
On a: Weekday

Statistic	Peak Period Demand
Peak Period	8:00 a.m.–12:00 p.m.; 2:00–3:00 p.m.
Number of Study Sites	14
Average Size of Study Sites	362,000 sq. ft. GFA
Average Peak Period Parking Demand	0.51 vehicles per 1,000 sq. ft. GFA
Standard Deviation	0.50
Coefficient of Variation	96%
Range	0.03–1.92 vehicles per 1,000 sq. ft. GFA
85th Percentile	0.81 vehicles per 1,000 sq. ft. GFA
33rd Percentile	0.29 vehicles per 1,000 sq. ft. GFA

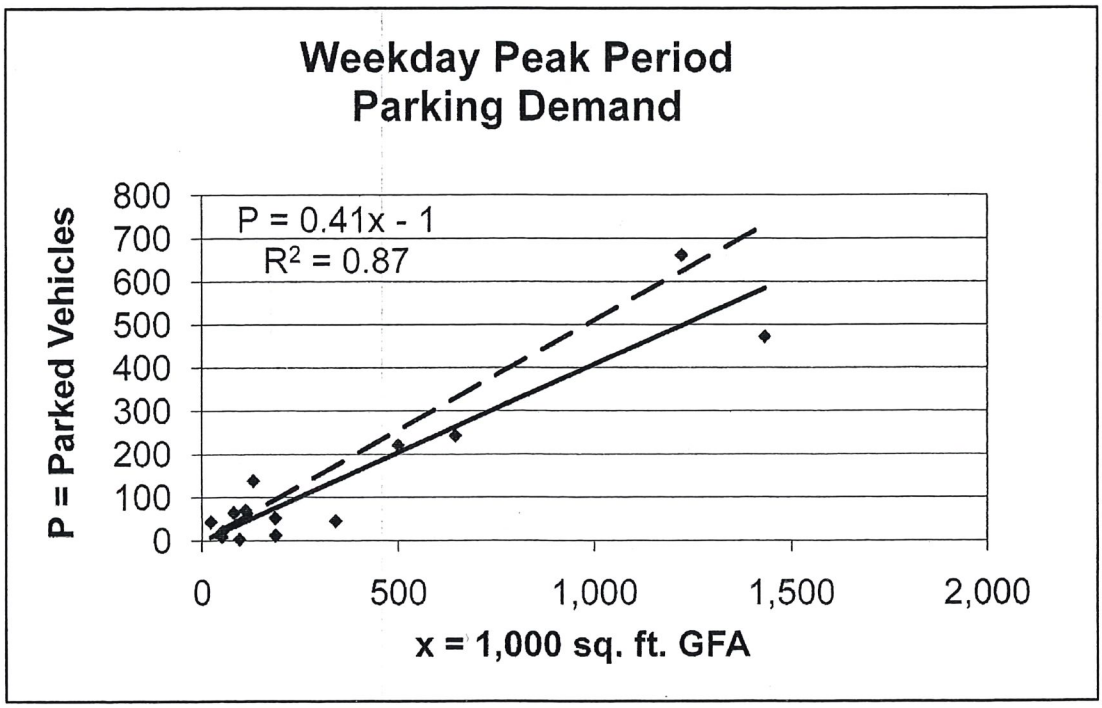

Land Use: 150
Warehousing

Average Peak Period Parking Demand vs. Employees
On a: Weekday

Statistic	Peak Period Demand
Peak Period	8:00 a.m.–12:00 p.m.; 2:00–3:00 p.m.
Number of Study Sites	13
Average Size of Study Sites	190 employees
Average Peak Period Parking Demand	0.78 vehicles per employee
Standard Deviation	0.26
Coefficient of Variation	33%
Range	0.36–1.16 vehicles per employee
85th Percentile	1.01 vehicles per employee
33rd Percentile	0.81 vehicles per employee

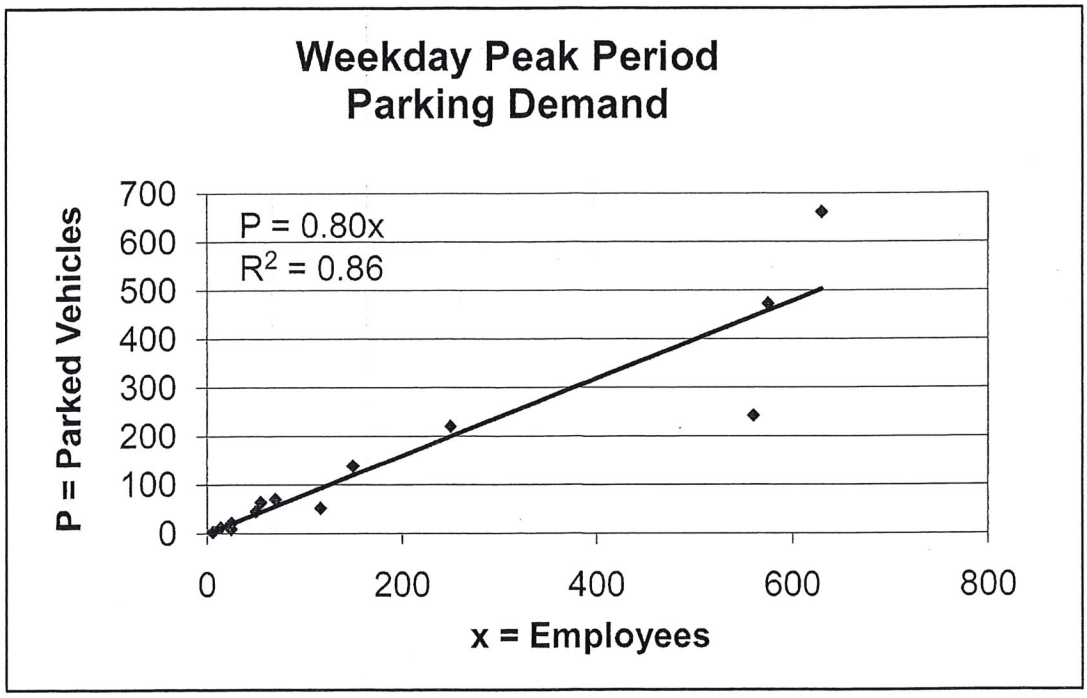

Frogner Consulting, LLC
Planning and Zoning Consultants
3402 SE Clubhouse Place Stuart FL 34997
Ph: (561) 386-3035 jfrogner@comcast.net

January 17, 2019

Florida Department of Transportation
District 4, Treasure Coast Operations
Motor Carrier Department
3601 Oleander Avenue
Fort Pierce, FL 34982

Dear Mr. Kehres;

In connection with our conditional use approval in the City of Ft Pierce, we have been asked to provide a proposed commercial vehicle route from our metal recycling facility located at 3340 Enterprise Road in the City of Ft. Pierce.

Based on my conversation with St Lucie County Public Works staff, our customers will be encouraged to use the routes as indicated on the attached map. Therefore, please confirm the roadways on the attached diagram present the most efficient commercial vehicle route from US-1 and I-95 to the subject site. The intended routes are:

1. From I-95, go east on Okeechobee Road to Virginia Avenue, turn right onto 125th Street S, right on Edwards Road, right onto Oleander to Bell St, right on Bell to Enterprise, then north to site.
2. From US-1, west on Farmers Market Road, left on Oleander, right on Bell Road and right onto Enterprise Road ¼ mile to site.

Based on the information provided, please confirm the routes are sufficient for commercial vehicle traffic and provide the least impact to any residential neighborhoods.

If you have any questions, please contact me at your earliest convenience.

Regards,

J.Frog.

Jim Frogner

JF/en

Cc: WEBUYSCRAP, LLC
Client file

F:\Data\WEBUYSCRAP.FT.P\FDOT.01.20.19.docx

COMMERCIAL VEHICLE ROUTES

1.from I-95 to site and 2. US-1 to site.



THE SUNRISE CITY
FORT PIERCE
PLANNING DEPARTMENT Florida

October 14, 2018

Frogner Consulting, LLC
3402 SE Clubhouse Place
Stuart, FL 34997

SUBJECT: **We Buy Scrap – 3340 Enterprise Road**
TECHNICAL REVIEW PROJECT: # 18-04000023
CONDITIONAL USE

Comments:

1. Perform a Unity of Title and or parcel combination on the properties at 3340 Enterprise Road & 1237 Grose Road as both properties will be utilized with this conditional use.
2. The site plan denotes that there is existing fence on the property with barbed wire, please remove barbed wire if it is concertina type wire as that is a prohibited fence type within the city limits.
3. Outdoor storage of materials is outlines on the site plan, demonstrate compliance with City Code 22-67(e)(5).
4. As this project is being described as a Junkyard in the project narrative, demonstrate compliance with City Code 16-69, New Junkyards.
5. If this in fact a junkyard detailed plans will need to be submitted on the fence and or wall that will need to be constructed to 8ft so that the City Planning Board may decide if it meets the requirements of City Code 16-69(d).
6. The site plan shows 28 regular parking spaces, but the project narrative talks about 31 regular parking spaces. Please indicate where the three missing parking spaces are.
7. If this project will be phased as the project narrative describes then please provide a project phasing plan that highlights what area will be worked on first, followed by the second and third phases.
8. A lighting plan or photometric survey will be required that demonstrates compliance with City Code 22-60(j)(1)(a)
9. Provide a Landscape Plan that demonstrates compliance with City Code 22-187, General Landscaping requirements as well as any other applicable code sections like 16-69 & 22-67(e)(5).

Please provide a written response to all TRC comments and provide submittal (10 copies) of all new materials by November 29, 2018 to advance to the December Planning Board. The presented review is specific to the proposed facility. Please contact me should you have any questions regarding the project at (772) 467-3742 or by e-mail: bcreagan@city-ftpierce.com.

Sincerely,

Brandon Creagan, LEED Green Associate
Planner

THE SUNRISE CITY
FORT PIERCE
ENGINEERING
DEPARTMENT
Florida

TO : Brandon Creagan, Planner

FROM : John R. Andrews, P.E., City Engineer

RE : We Buy Scrap Conditional Use – 3340 Enterprise Road
TRC No. 18-04000023

DATE : November 9, 2018

RECEIVED
NOV 13 2018
CITY OF FORT PIERCE
PLANNING & ZONING

This is to advise you that we have completed the review of the following documents as received by this office on November 5, 2018:

- ☑ Conditional Use Submittal
- ☐ Test Reports & Related Documents
- ☐ Record Drawings
- ☐ Clearances from all applicable Local, State and Federal Agencies
- ☐ P/D Drawings
- ☐ Certificate of Completion
- ☐ Permits from applicable Local, State & Federal Agencies

Based on our reviews and appropriate site final inspection, we

- ☑ Recommend
- ☐ Do Not Recommend

- ☑ Approval of CU
- ☐ Building Permit
- ☐ C/O

Developer, Owner, Engineer, Contractor and other members of the Development Team must be aware, the above recommendation is based only on the construction requirements of the engineering plans and other engineering documentation approved by this department. The Development Team shall be responsible for the compliance with other City department requirements and all approved documents, as well as Local, State and Federal regulations. The development requirements for this project may necessitate additional construction requirements that are not subject to this department's review for approval.

- ☐ See attached for engineering comments

JRA/TST/tst

Q:\ENGINEERING\Site Development Projects\W\We Buy Scrap\Conditional Use\Submittal No. 1 - 110518\CU Approval- 110918.docx

THE SUNRISE CITY
FORT PIERCE
BUILDING DEPARTMENT Florida

BUILDING DEPARTMENT
TECHNICAL REVIEW COMMITTEE (TRC)
COMMENT FORM

Meeting Date: November 15, 2018
Property Address: 3340 Enterprise Rd. – Cond. Use
Property Name: We Buy Scrap
Project Name:
Planner: Brandon Creagan

Please be advised that the project may trigger the requirements indicated below:

☑ 1. Building Official or his representative has no comment at the time of this meeting, but reserves submission of comments upon completion of the official plan review.

☐ 2. Pre-construction meeting with the City's Building Department is requested.

☐ 3. Any construction will need to meet the requirements of the Florida Building Code 6th Edition.

☐ 4. Means of egress is required.

☐ 5. Means of ingress is required.

☐ 6. Must meet the following Accessibility requirements:

- ☐ Accessible route
- ☐ Handicapped parking spaces
- ☐ Means of egress

☐ 7. Change of Use required

- ☐ to include a signed and sealed Life Safety Plan
- ☐ to include a signed and sealed detailed comprehensive building plan.

☐ 8. Property exists in Special Flood Hazard Area. All Federal and State requirements shall be addressed.

☐ 9. Flood Development Permit required.

☐ 10. Building Permit required.

☐ 11. Signed and sealed construction drawings required.

☐ 12. Will need to meet the Fire Code.

☐ 13. Sprinkler system is required.

☐ 14. Smoke alarm system is required.

☐ 15. Other

Additional Comments/Requirements:

Building Official's or Representative's Signature _____ Date: 11/15/18

November 9th, 2018

Project: **We Buy Scrap**
Subject: **SURVEY REVIEW**
To: Brandon Creagan
From: Rod Reed, PLS
SLC-Engineering Division

All comments are based on the Standards of Practice per 5J-17.050 thru 5J-17.052

SURVEY:

1) No comments.

Please provide a written response to all comments

Rod Reed, County Surveyor
St. Lucie County, Fl.
2300 Virginia Avenue
Ft. Pierce, Fl. 34982-5652
www.stlucieco.org
Ph. (772) 462-1721
E-mail reedr@stlucieco.org

November 13, 2018

Project: **WE BUY SCRAP**
Subject: **CONDITIONAL USE**
To: Brandon Creagan
From: Grant Chambers
SLC-Engineering Division

1. The driveway at Enterprise road shall be improved to County Standards. Please contact the County engineering division at 462-1707 regarding driveway permit requirements.

November 28, 2018

SUBJECT: We Buy Scrap – 3340 Enterprise Road

TECHNICAL REVIEW PROJECT: # 18-04000023

CONDITIONAL USE REQUEST

Response to Comments in Bold:

1. Perform a Unity of Title and or parcel combination on the properties at 3340 Enterprise Road & 1237 Grose Road as both properties will be utilized with this conditional use.

Response: Acknowledged. A Lot Combination may be a better way to combine the 2 lots.

2. The site plan denotes that there is existing fence on the property with barbed wire, please remove barbed wire if it is concertina type wire as that is a prohibited fence type within the city limits.

Response: The barbed wire will be removed and a green fabric installed to provide screening.

3. Outdoor storage of materials is outlines on the site plan, demonstrate compliance with City Code 22-67(e)(5).

Response: Acknowledged.

4. As this project is being described as a Junkyard in the project narrative, demonstrate compliance with City Code 16-69, New Junkyards.

Response: Agree and acknowledged. The zoning letter dated June 27, 2018 classified the use as :Waste-related Use".

5. If this in fact a junkyard detailed plans will need to be submitted on the fence and or wall that will need to be constructed to 8ft so that the City Planning Board may decide if it meets the requirements of City Code 16-69(d).

Response: Acknowledged and will comply. A Change of use permit will be submitted to the building department for minor improvements such as ADA compliance and a general "spruce up".

Frogner Consulting, Inc. Planning and Zoning Consultants
3402 SE Clubhouse Place Stuart FL 34997
Ph: (561) 386-3035 jfrogner@comcast.net

6. The site plan shows 28 regular parking spaces, but the project narrative talks about 31 regular parking spaces. Please indicate where the three missing parking spaces are.

Response: The parking spaces are shown in the "Phase Box" on the site plan.

7. If this project will be phased as the project narrative describes then please provide a project phasing plan that highlights what area will be worked on first, followed by the second and third phases.

Response: Acknowledged – the Phasing Plan is outlined on the Site plan, SP-2.

8. A lighting plan or photometric survey will be required that demonstrates compliance with City Code 22-60(j)(1)(a)

Response: A photometric plan will be provided during the change of use permit process.

9. Provide a Landscape Plan that demonstrates compliance with City Code 22-187, General Landscaping

Response: A landscape plan is shown on SP-2 site plan.

THE SUNRISE CITY
FORT PIERCE
PLANNING DEPARTMENT
Florida

AFFIDAVIT OF NOTIFICATION AND MAILING

I, the undersigned, do hereby declare that I did mail copies of a notice of public hearings to each owner of the property located, or having any part thereof, situated within five hundred (500) feet of any point of the property for which the request has been made and to the owner of the property for which the request has been made, as required by Chapter 22, Article X, Section 22-143 of the Code of Ordinances.

Project: We Buy Scrap - Metal Recycling Facility

Staff Name: Brandon C. Creagan, LEED Green Associate, Planner

Staff Signature: B C C

Date Mailed: 2-6-19

Number of Mailed Letters: 24

Attachments:
Copy of notice of public hearings
Mailing list
Map of properties notified

THE SUNRISE CITY
FORT PIERCE
PLANNING DEPARTMENT
Florida

February 6, 2019

Dear Property Owner(s):

The property owner, **H & S Citrus Inc. (Robert Deery),** applicant, **We Buy Scrap,** & representative **Frogner Consulting, LLC** are requesting approval of a **Conditional Use with No New Construction** to operate a metal recycling facility. The business will be located at 3340 Enterprise Road & 1237 Grose Road. The property is zoned Light Industrial (I-1). The Parcel IDs are 2428-502-0033-000-1 & 2428-502-0035-000-5.

Legal Description: INDUSTRIAL S/D SLY 100 FT OF LOT29 (1.46 AC) (OR 712-1970; 3612-657) & INDUSTRIAL S/D LOT 28-LESS W 156FT – (2.42 AC)(OR 205-1297: 256-175)

A public hearing is scheduled before the City Commission of the City of Fort Pierce, Florida, at their meeting on **Tuesday, February 19, 2019** which begins at **6:30 p.m**. in the City Hall Commission Chambers, 100 North U.S. 1, Fort Pierce, Florida. You are provided the opportunity to attend the public hearing and to speak in favor of, or in opposition to, the requested **Conditional Use with No New Construction**. Whether you attend the meeting or not, it is requested that you please complete the form below and return it so it is received by **5 p.m**. on **Tuesday, January 19, 2019.** Methods of returning your ballot are identified below. Each ballot returned will be tabulated and reported to the City Commission. If you have any inquiries, or would like to review the complete application, please contact me at (772) 467-3742 or bcreagan@city-ftpierce.com. Furthermore, published agenda packets for each City Commission meeting are provided a few days in advance at the following web address: http://cityoffortpierce.com/223/Agendas-Minutes.

Thank you for your contribution.

Sincerely,

Brandon Creagan, LEED Green Associate
Planner

Conditional Use No New Construction – We Buy Scrap Metal Recycling Facility No. 1

I approve O I disapprove O

Comments:

_____

_____

_____

_____ _____

Signature **Date**

Please complete and return ballot to:

Mail		**Fax**		**Email**
City of Fort Pierce Planning Department 100 N. US Hwy 1 Fort Pierce, FL 34950	or	(772) 466-5808	or	bcreagan@city-ftpierce.com

Aerial Map

3340 Enterprise Road & 1237 Grose Road

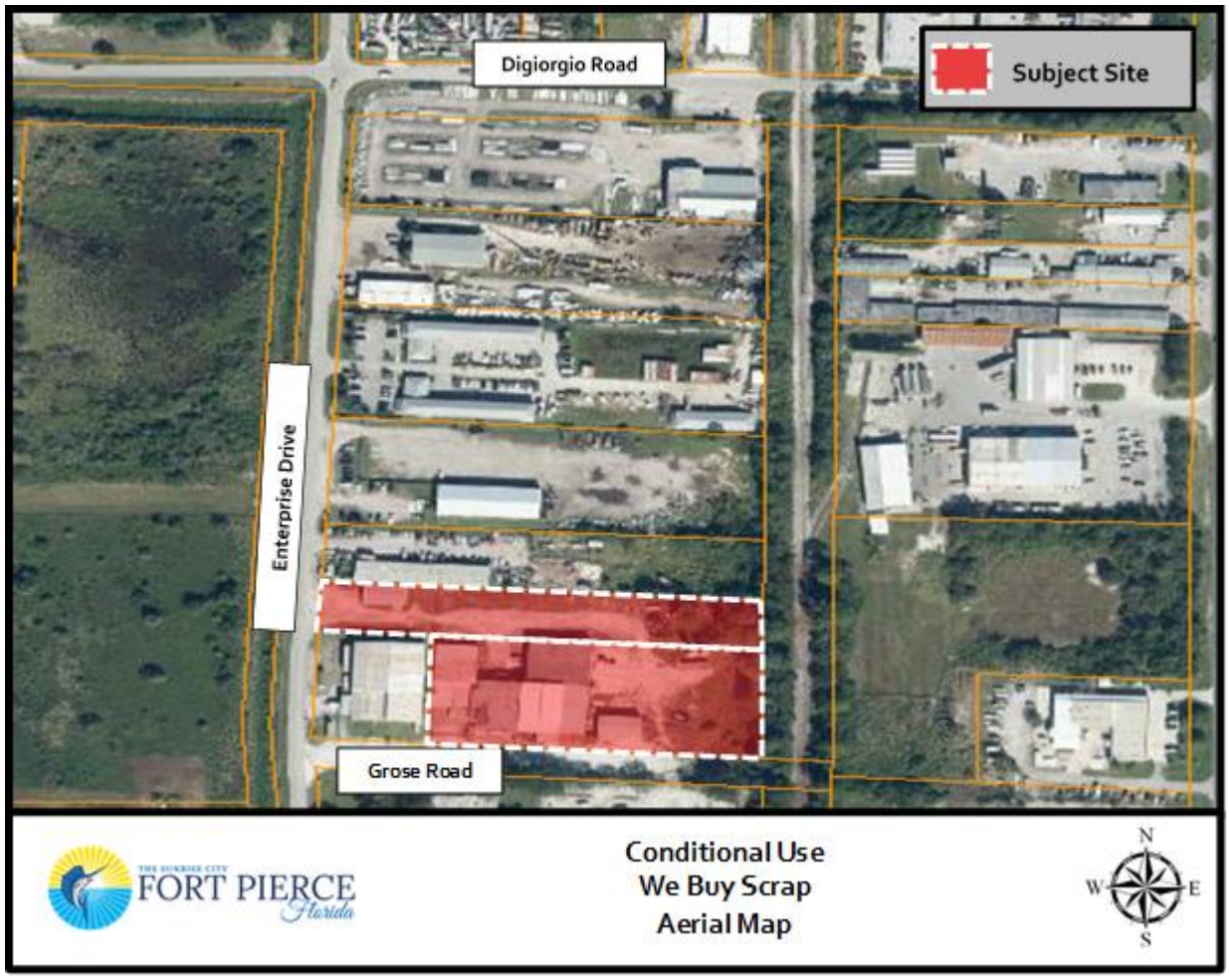

Forest E Grose 1
701 Georgia AVE
Fort Pierce, FL 34950-9345

Florida State Dept of Ag 2
407 S Calhoun St
Tallahassee, FL 32399-6555

Indian River Insulation Co Inc 3
3416 Enterprise RD
Fort Pierce, FL 34982-6556

FEC RR 4
7411 Fullerton St Ste 300
Jacksonville, FL 32256-3629

Alexander L Johnson Jr 5
PO Box 881328
Port St Lucie, FL 34988-1328

St Lucie County 6
2300 Virginia Ave
Fort Pierce, FL 34982-5632

Florida State Dept of Ag 7
407 S Calhoun St
Tallahassee, FL 32399-6555

Greenman-Pederson Inc 8
325 W Main ST
Babylon, NY 11702-3444

CMN Property Llc 9
10900 Phillips Hwy
Jacksonville, FL 32256-1560

Gator Shop LLC 10
9250 W Atlas DR
Homosassa, FL 34448-6433

CMN 2 L.L.C. 11
10900 Phillips Hwy
Jacksonville, FL 32256-1560

Equity Trust Company ETAL 12
2429 SE Pinero RD
Port St Lucie, FL 34952-5326

George B Brown ETAL 13
PO Box 1478
Fort Pierce, FL 34954

H and S Citrus Inc 14
PO Box 1616
Fort Pierce, FL 34954-1616

Southern Bell Tel and Tel 15
Attn: Property Tax Dept: Po Box 7207
Bedminster, NJ 07921-7207

JKM Realty LLC 16
112 S Tryon ST, Unit Ste 200
Charlotte, NC 28284-0010

Railside LLC ETAL 17
4510 SW Thistle TER
Palm City, FL 34990-3939

Railside LLC ETAL 18
4510 SW Thistle TER
Palm City, FL 34990-3939

Railside LLC ETAL 19
4510 SW Thistle TER
Palm City, FL 34990-3939

Graybar Electric Co Inc 20
11885 Lackland RD
Maryland Heights, MO 63146-4265

Big Red Tomato Packers LLC 21
PO Box 1646
Fort Pierce, FL 34954-1646

Cornerstone Propane Oper LLC 22
PO Box 965
Valley Forge, PA 19482-0965

Betty C Brolmann ETAL 23
271 Bermunda Beach Dr
Fort Pierce, FL 34949-1527

Enterprise Rd LLC 24
4361 Okeechobee Blvd Unit A7
West Palm Beach, FL 33409-3144


Digiorgio Road
Grose Road
Enterprise Drive

THE SUNRISE CITY
FORT PIERCE
PLANNING DEPARTMENT Florida

PUBLIC NOTIFICATION CERTIFICATION

PROJECT NAME: We Buy Scrap - Metal Recycling Facility

NOTICES PROVIDED PURSUANT TO: 22-143

NOTICE BY NEWSPAPER: 2-4-2019

NOTICE BY MAIL: 2-6-2019

NOTICE BY SIGNS: 2-6-2019

VERIFIED BY: Brandon Creagan **TITLE:** Planner

SIGNATURE:  **DATE:** 2-7-2019

City Commission Regular Meeting **13.a.**

Meeting Date: 02/19/2019

Re: Appointing Members to the Communitywide Council

SUBJECT:

Applications seeking appointment to the Communitywide Council

SUMMARY:

The Communitywide Council consists of 5 members which must represent specific targeted areas and be a city resident.

The current membership with expired or expiring terms is as follows:
City resident, John Neprud, whose term expired on 7/4/2018
City resident, Robert Brown, whose term expired on 7/4/2018

John Neprud and Robert Brown are not seeking reappointment. Eligible applications have been received from Curtis Johnson Jr, Jessica McCain, Frederick Spears and Rosemarie Lane.

RECOMMENDATION:

Appoint Curtis Johnson Jr and Jessica McCain to the Council.

ALTERNATIVES:

Select other member(s) to serve the remaining City resident positon(s) from the elegible applications received from Frederick Spears and Rosemarie Lane.

RESPONSIBLE STAFF:

Caleta Scott, Manager, Grants Administration Division

COORDINATED WITH:

Linda Cox, City Clerk

Fiscal Impact

Budgeted Y/N:

OTHER INFORMATION:

There is no fiscal impact.

Attachments

Johnson
Lane
McCain

Spears

Form Review

Inbox	Reviewed By	Date
Finance Department	Johnna Morris	02/13/2019 11:07 AM
City Manager	Nick Mimms	02/14/2019 08:44 AM
Form Started By: Caleta Scott		Started On: 02/05/2019 07:05 PM
Final Approval Date: 02/14/2019		

CITY OF FORT PIERCE

100 NORTH US HWY 1
FORT PIERCE, FLORIDA 34950
(772) 467-3065 fax (772) 467-3841

APPLICATION FOR APPOINTMENT/REAPPOINTMENT

Name of Board or Boards for which you are applying: Communitywide Council

Name: Curtis E Johnson, Jr	Phone: 772-206-3966
Home Address: City/Zip Code: 1501 N 21st Street Ft Pierce, FL 34950	How long at this address? 50 years
Are you a citizen of the United States? ☑ Yes ☐ No	
Occupation: Entrepernuer	
Do you own a business that operates within the City of Fort Pierce? ☑ Yes ☐ No If yes, list the address and nature of said business: I work out of my home	
Do you now or in the future plan to do business with the City of Fort Pierce? ☑ Yes ☐ No If yes, in what capacity?	
Are you employed by a business that is located within the City of Fort Pierce? ☑ Yes ☐ No If yes, state the business and location:	
Do you have special training or knowledge in the area of: Architecture: ☐ Yes ☐ No Engineering: ☐ Yes ☐ No Real Estate Brokering: ☐ Yes ☐ No Contracting: ☐ Yes ☐ No Land Development: ☐ Yes ☐ No Other: Describe your education, background, training and knowledge – (feel free to attach a resume): BA & MBA Business Administration/Marketing Florida A&M University	
Are you currently a member of a Commission-appointed board/committee? ☐ Yes ☑ No If yes, please specify:	
Have you ever been convicted of a felony? ☐ Yes ☑ No If yes, what was the nature of the crime(s) you were convicted of:	
Referred by:	Applicant Email Address: cjohnson41906@gmail.com
Date: 7/11/2018	Applicant's Signature Curtis E Johnson, Jr

APPLICATIONS EXPIRE 6 MONTHS FROM THE DATE OF SUBMISSION. PLEASE REAPPLY AS OFTEN AS DESIRED.
Please return form to: City Clerk's Office – 100 North US Hwy 1, Fort Pierce, Florida 34950
fax (772) 467-3841 or via email at lcox@city-ftpierce.com

CITY OF FORT PIERCE

100 NORTH US HWY 1
FORT PIERCE, FLORIDA 34950
(772) 467-3066 FAX (772) 467-3841

RECEIVED
JAN 17 2019
CITY CLERK'S OFFICE

APPLICATION FOR APPOINTMENT/REAPPOINTMENT

Name of Board or Boards for which you are applying: Community Wide Council

Name: Rosemarie Lane	Phone: (772) 626-7590
Home Address: 2912 Carver St. Fort Pierce, 34947 City/Zip Code:	How long at this address? 15 years
Are you a citizen of the United States? ☒ Yes ☐ No	
Occupation: Retired	
Do you own a business that operates within the City of Fort Pierce? ☐ Yes ☑ No If yes, list the address and nature of said business:	
Do you now or in the future plan to do business with the City of Fort Pierce? ☐ Yes ☑ No If yes, in what capacity?	
Are you employed by a business that is located within the City of Fort Pierce? ☐ Yes ☑ No If yes, state the business and location:	
Do you have special training or knowledge in the area of: Architecture: ☐ Yes ☑ No Engineering: ☐ Yes ☑ No Real Estate Brokering: ☐ Yes ☑ No Contracting: ☐ Yes ☑ No Land Development: ☐ Yes ☑ No Other: Describe your education, background, training and knowledge in the above area(s):	
Are you currently a member of a Commission-appointed board/committee? ☐ Yes ☑ No If yes, please specify:	
Have you ever been convicted of a felony? ☐ Yes ☑ No If yes, what was the nature of the crime(s) you were convicted of:	
Referred by: Commissioner Alexander Applicant Email Address: missrosemarie01@gmail.com	
Date: Jan. 17, 2019	Applicant's Signature Rosemarie Lane

APPLICATIONS EXPIRE 6 MONTHS FROM THE DATE OF SUBMISSION. PLEASE REAPPLY AS OFTEN AS DESIRED.
Please return form to: City Clerk's Office – 100 North US Hwy 1, Fort Pierce, Florida 34950
fax (772) 467-3841 or via email at lcox@city-ftpierce.com

CITY OF FORT PIERCE

100 NORTH US HWY 1
FORT PIERCE, FLORIDA 34950
(772) 467-3065 fax (772) 467-3841

APPLICATION FOR APPOINTMENT/REAPPOINTMENT

Name of Board or Boards for which you are applying: Community-wide Canal Advisory Board

Name: Jessica McCain MD	Phone: (772) 579-2502
Home Address: 3021 Fairway Dr City/Zip Code: Fort Pierce, FL 34982	How long at this address? 3 yrs (born + raised here)
Are you a citizen of the United States? ☒ Yes ☐ No	
Occupation: Physician	
Do you own a business that operates within the City of Fort Pierce? ☐ Yes ☒ No If yes, list the address and nature of said business:	
Do you now or in the future plan to do business with the City of Fort Pierce? ☒ Yes ☐ No If yes, in what capacity? Primary care office, est. 2019	
Are you employed by a business that is located within the City of Fort Pierce? ☐ Yes ☒ No If yes, state the business and location:	
Do you have special training or knowledge in the area of: Architecture: ☐ Yes ☐ No Engineering: ☐ Yes ☐ No Real Estate Brokering: ☐ Yes ☐ No Contracting: ☐ Yes ☐ No Land Development: ☐ Yes ☐ No Other: Describe your education, background, training and knowledge – (feel free to attach a resume):	
Are you currently a member of a Commission-appointed board/committee? ☐ Yes ☒ No If yes, please specify:	
Have you ever been convicted of a felony? ☐ Yes ☒ No If yes, what was the nature of the crime(s) you were convicted of:	
Referred by:	Applicant Email Address: jcollins.mccain@gmail.com
Date: 7/18/18	Applicant's Signature

APPLICATIONS EXPIRE 6 MONTHS FROM THE DATE OF SUBMISSION. PLEASE REAPPLY AS OFTEN AS DESIRED.
Please return form to: City Clerk's Office – 100 North US Hwy 1, Fort Pierce, Florida 34950
fax (772) 467-3841 or via email at lcox@city-ftpierce.com

Jessica Collins McCain, MD

3021 Fairway Dr. Fort Pierce, FL 34982
772-579-2502 cell / 772-218-7262 work
jcollins.mccain@gmail.com

Education

Saint Vincent's Family Medicine Residency (Jacksonville, FL) 7/2012-7/2015
ABFM Certified

Saint George's University School of Medicine (Grenada, West Indies) 1/2008-6/2012
M.D., *magna cum laude*

Indian River State College (Fort Pierce, FL) 6/2007-8/2007
Applied Technology Diploma-Emergency Medical Technology (EMT)

Florida State University (Tallahassee, FL) 8/2002-6/2006
B.S. Exercise Science, minor Biology and Chemistry
Honors Classes, *summa cum laude*, IB full scholarship

Work Experience

Southern Comfort Marijuana Clinic 3/2017- present
Started clinic from inception, developed new EMR system
Compassionate Care Physician for Medical Cannabis in Florida, guest speaker at conferences

Whole Family Health Center 7/2015-7/2018
Primary care and focus on HIV management
Started the Pediatrics department, selected and onboarded new EMR
Oversight of PA and ARNPs

FirstCare Urgent Care Center 12/2014-6/2015
Moonlighting during Residency as physician for acute care setting

Hospitalist Specialists of Saint Vincent's Medical Center 5/2013-12/2014
Moonlighting during Residency as physician for inpatient care setting

GoLive Physician IT Support for EMR transition 5/2012, 2/2017
Inpatient and outpatient transition of four EMR systems
at SVMC, WFHC, and SoCo, with research and selection decision

Walgreens Pharmacy Technician 6/2006-12/2007

FSU Organic Chemistry II Teacher Assistant 2006
& SGU Immunology Educational Facilitator 2009

Research Assistant, Internship at Smithsonian Marine Station 6/2006-8/2006

Bail Bond Agent, Family business

Extracurricular Activities and Association Memberships

American Academy of Family Physicians 2012-present

American Medical Association 2012-2015

Duval County Medical Society 2012-2015
Resident Committee Board Member

Jacksonville Sports Medicine Program & Special Olympics 2012-2015
Annual physicals for school-age and special needs individuals

American Medical Student Association 2009-2012
Chapter Class Representative, Local Health Fairs, National Conventions,
2010 National Regional Coordinator for Community and Environmental Health

Student Government Association 2008-2012
Class Representative for basic science and clinical years

Women in Medicine Club, AMWA, ACOG 2008 -2009

Treasure Coast Hospice Home Volunteer 2006-2008

Tallahassee Alzheimer's Resource Center, Respite Provider 2005-2006

Scholarly Activities

Presentation at 16th Annual International Integrative Oncology Conference 5/2018
Hosted by the Best Answers for Cancer Organization, provided separate presentations for physicians and public events, Use of Cannabis in Cancer Therapy

Florida Compassionate Care Physician Certification 2016- current

Healthy Smiles: Pediatric Fluoride Varnish Service Project 2012- 2015
NEFM Journal recognition for QI project to establish protocol for Fluoride Varnish services in the Family Practice Clinic; local research, reimbursement, product supply, data collection.

ALSO Certification, PALS Certification 2012- 2015

Personal

Proficient use of computers and EHR/EMR
Learning Spanish
Hobbies include camping/travel, live music, fishing, garden/ranching, intramural sports

References

Available upon request

CITY OF FORT PIERCE

100 NORTH US HWY 1
FORT PIERCE, FLORIDA 34950
(772) 467-3065 fax (772) 467-3841

RECEIVED
AUG 23 2018
CITY CLERK'S OFFICE

APPLICATION FOR APPOINTMENT/REAPPOINTMENT

Name of Board or Boards for which you are applying: Community Wide Council

Name: Frederick D. Spears	Phone: (772) 618-5604
Home Address: City/Zip Code: 1009 Ave. I Ft. Pierce, Fl. 34950	How long at this address? 25 yr.
Are you a citizen of the United States? ☒ Yes ☐ No	
Occupation: Sales Associate / Customer Service	
Do you own a business that operates within the City of Fort Pierce? ☐ Yes ☒ No If yes, list the address and nature of said business: N/A	
Do you now or in the future plan to do business with the City of Fort Pierce? ☐ Yes ☒ No If yes, in what capacity? N/A	
Are you employed by a business that is located within the City of Fort Pierce? ☒ Yes ☐ No If yes, state the business and location: Bealls Outlet 2313 S HWY 1 Ft. Pierce, Fl. 34950	
Do you have special training or knowledge in the area of: Architecture: ☐ Yes ☒ No Engineering: ☐ Yes ☒ No Real Estate Brokering: ☐ Yes ☒ No Contracting: ☐ Yes ☒ No Land Development: ☐ Yes ☒ No Other: Describe your education, background, training and knowledge in the above area(s): N/A	
Are you currently a member of a Commission-appointed board/committee? ☐ Yes ☒ No If yes, please specify: N/A	
Have you ever been convicted of a felony? ☐ Yes ☒ No If yes, what was the nature of the crime(s) you were convicted of: N/A	
Referred by:	Applicant Email Address: Fredspears17@gmail.com
Date: 8/23/18	Applicant's Signature

APPLICATIONS EXPIRE 6 MONTHS FROM THE DATE OF SUBMISSION. PLEASE REAPPLY AS OFTEN AS DESIRED.
Please return form to: City Clerk's Office – 100 North US Hwy 1, Fort Pierce, Florida 34950
fax (772) 467-3841 or via email at lcox@city-ftpierce.com

Frederick D. Spears

1009 Avenue I Fort Pierce, Florida 34950
Cell: (772) 618-5654 Email: Fredspears17@gmail.com

Professional Summary

I am a person who goes above and beyond basic administrative tasks and takes on multiple projects at once. Excellent work ethic and strength in boosting company morale. Quality-focused and committed to approaching administrative tasks with tenacity and attention to detail. Attentive Customer Service Representative who has achieved customer service satisfaction and customer retention goals. Independent and quick thinking team player seeking a role offering increased responsibility.

Skills

- •Excellent communication skills
- •Articulate and well-spoken
- •Customer service-oriented
- •Accurate and detailed
- •Works well under pressure
- •Social media knowledge
- •Pleasant demeanor
- •Appointment setting
- •Team building
- •Motivated team player
- •Great leadership skills
- •Skilled problem solver
- •Stocking
- •Merchandising
- •Retail sales
- •Computer literate
- •Customer-oriented
- •Multi-line phone

Work History

03/2012 to Current **Overnight Stocker**

Wal-Mart Inc.- 5100 Okeechobee Road Fort Pierce, Florida 34982 #: (772) 468-0880

- •Maintained cleanliness and presentation of stock room and production floor.
- •Processed cash and credit payments rapidly and accurately.
- •Stocked and replenished merchandise according to store merchandising layouts.
- •Priced merchandise, stocked shelves and took inventory of supplies.

06/2011 to 12/2012 **Receptionist**

El Bethel Community Development Center- 518 Means Court Fort Pierce, Florida 34950 #: (772) 882-4515

- •Answered and managed incoming and outgoing calls while recording accurate messages.
- •Screened all visitors and directed them to the correct employee or office.
- •Handled daily heavy flow of paperwork and cooperated with the accounting departments

Education

Current: **Secondary Education**

Indian River State College- 3209 Virginia Avenue Fort Pierce, Florida 34981

2011: **High School Diploma**

Fort Pierce Central High School – 4101 South 25th Street Fort Pierce, Florida

City Commission Regular Meeting **13.b.**

Meeting Date: 02/19/2019

Re: Establishment of an Infrastructure Surtax Citizen Oversight Committee

Submitted For: John Andrews, City Engineer, Engineering

SUBJECT:

Resolution No. 19-R06 establishing an Infrastructure Surtax Citizen Oversight Committee as per the requirements specified in City of Fort Pierce Resolution No. 18-R15 and the half-cent sales surtax ballot language approved by the citizens of St. Lucie County.

SUMMARY:

In November 2018 the citizens of St. Lucie County approved a ballot referendum in which an additional half-cent sales tax (surtax) was approved. This surtax would be utilized by the applicable local governments to provide financing, planning, constructing,reconstructing, renovating, and improving new and existing infrastructure. As a condition of this surtax approval, the County, City of Fort Pierce, and City of Port St. Lucie were to establish an Infrastructure Surtax Oversight Committee to provide independent oversight.

RECOMMENDATION:

Request approval of Resolution

ALTERNATIVES:

Reject and provide revised Resolution

RESPONSIBLE STAFF:

Engineering

COORDINATED WITH:

St. Lucie County

Fiscal Impact

Budgeted Y/N:	N/A
Fiscal Year:	N/A
Account:	N/A
Amount:	N/A

OTHER INFORMATION:

N/A

Attachments

19-R06

Form Review

Inbox	Reviewed By	Date
City Manager	Nick Mimms	02/12/2019 11:18 AM

Form Started By: Tracy Telle
Started On: 02/06/2019 09:26 AM
Final Approval Date: 02/12/2019

RESOLUTION NO. 19-R___

A RESOLUTION OF THE CITY COMMISSION OF THE CITY OF FORT PIERCE, FLORIDA, ESTABLISHING THE INFRASTRUCTURE SURTAX CITIZEN OVERSIGHT COMMITTEE; ESTABLISHING THE MEMBERSHIP OF THE OVERSIGHT COMMITTEE; ESTABLISHING THE RESPONSIBILITIES AND DUTIES OF THE OVERSIGHT COMMITTEE; ESTABLISHING PROCEDURES FOR THE CONDUCT OF MEETINGS AND OPERATIONS; ESTABLISHING A SUNSET DATE; PROVIDING AN EFFECTIVE DATE; AND FOR OTHER PURPOSES

WHEREAS, on March 19, 2018, the City of Fort Pierce adopted Resolution No. 18-R15 supporting the St. Lucie County Board of County Commissioners intention to impose a voter approved half percent (.5%) local government infrastructure surtax (the "Surtax") to be utilized by the City of Fort Pierce for the financing, planning, constructing, reconstructing, renovating and improving of needed infrastructure; and

WHEREAS, a referendum on the Surtax was held on November 6, 2018 and the voters of the St. Lucie County approved the Surtax; and

WHEREAS, City Resolution No. 18-R15 and the ballot language approved by voters in the referendum called for "independent oversight by citizen committee" to review the City's expenditures of Surtax proceeds; and

WHEREAS, the City of Fort Pierce desires that the Infrastructure Surtax Citizen Oversight Committee be tasked with the review of projects funded by the Infrastructure Surtax and issue reports to the City Commission to insure transparency and to provide the citizens of the City with the assurance that funds are being spent in the manner approved by the voters and in accordance with state law.

NOW, THEREFORE, BE IT RESOLVED by the City of Fort Pierce, Florida that:

Section 1: Establishment and Purpose: The City of Fort Pierce hereby establishes the Infrastructure Surtax Citizen Oversight Committee (the "Committee") pursuant to City Resolution No. 18-R15 and the ballot language approved by the voters.

Section 2: Membership and Qualifications: Term of Appointment; Vacancy

A. The Committee shall consist of seven (7) members and one (1) alternate. All members shall have the following qualifications:

1. A member shall be a resident of the City of Fort Pierce;

2. One member shall be appointed by each member of the City

Commission;

3. Two members shall be appointed at large;
4. At-large members shall serve a term of four years;
5. Members shall not be elected officials or City staff members;
6. Consideration should be given to applicants to the Committee that have a background in engineering, planning or finance.

B. The term of each member of the Committee appointed by an individual City Commission member shall coincide with the terms of the City Commission member that appointed the member of the Committee.

C. All Committee Members appointed by an individual City Commission member shall serve at the pleasure of the City Commission member who appointed the Committee member.

Committee Members shall be automatically removed for lack of attendance. Lack of attendance means failure to attend three (3) consecutive regularly scheduled meetings or failure to attend at least two-thirds of the regularly scheduled meetings during a calendar year. Participation for less than three-fourths of a meeting shall be the same as a failure to attend a meeting. Absences shall be entered into the minutes of the Committee meeting.

D. Vacancies occurring for any reason during the term of office by a Committee Member shall be filled within ninety (90) days from the date of the vacancy.

Section 3: Responsibilities and Duties.

The Committee shall act solely in an oversight and advisory capacity to the City Commission. The Committee shall not be responsible for identifying projects or determining the priority of a proposed project on the approved projects list. Project priorities are determined by the City Commission based upon many factors, including, but not limited to, availability of surtax revenues along with the status of project design and permitting. The Committee shall have the following responsibilities and duties:

A. Prepare an annual report to the City Commission regarding:

1. Whether City's expenditure of Surtax proceeds for the fiscal year was consistent with the requirements of Section 212.055(2), Florida Statutes, and the ballot language approved by the voters; and
2. Whether the City's expenditure of Surtax proceeds for the fiscal year was consistent with the City's approved Surtax proceeds project list, if any, or any future revisions to that list as approved and adopted by the City of Fort Pierce Commission.

B. Review documents and projects:

1. The Committee will be presented with appropriate documents, plans, budgets, designs, permits (or permit applications), reports, photographs, presentations or other materials to sufficiently determine the status of each project.
2. Review and comment upon any changes or additions to the project list that may occur as a result of emergencies, hurricanes or other acts of God that might necessitate altering the projects list. In the case of an emergency, the Committee may be consulted after-the-fact.

Section 4: Operations and Procedures. The Committee shall be governed by the following rules of procedure:

A. Chair and Vice Chair: During the initial meeting of the Committee, the Committee shall select a Chair and Vice Chair from its membership to preside over and conduct meetings. The Chair and Vice Chair shall be selected by a majority vote of the Committee Members. After the first year of service, the Committee shall annually select one of its members as Chair and one of its members as Vice Chair. In the event the Chair or Vice Chair of the Committee is not fulfilling his or her responsibilities, the Committee, may at its own discretion, remove said Committee Member from the Chair or Vice Chair position, and appoint a replacement for the remainder of the term.

B. Meetings: The Committee shall meet quarterly, or as needed, as determined by the Committee in order to fulfill its duties and

responsibilities. The Committee shall endeavor to schedule the first meeting of the Committee in March of 2019. During the initial meeting of the Committee, the Committee shall, by majority vote, set a meeting schedule for the upcoming year. The Committee shall set meeting schedules for subsequent years as determined by the Committee. The meeting schedule shall include the date, time and location of the meetings.

All meetings and business of the Committee, and any Subcommittees, shall comply with and be subject to the requirements of the Florida Sunshine Law (Chapter 286, Florida Statutes); the Florida Public Records Law (Chapter 119, Florida Statutes), the Florida Ethics Code (Chapter 112, Florida Statutes), and all other applicable local or state statutes, ordinances, or rules. All meetings of the Committee and any Subcommittees shall be open to the public at all times, shall be subject to public participation requirements as outlined in the Florida Statutes. Minutes of each meeting shall be recorded.

C. Quorum: A quorum shall consist of no less than four (4) members. Recommendations and decisions of the Committee shall be made by a majority vote of those present and voting.

D. Agendas: The Committee, with input and assistance from the Chair, shall be responsible for preparing the meeting agenda and distributing the agenda to all Committee Members prior to the meeting.

E. Reports: The Committee shall compile information received from the City on Surtax expenditures so that it is able to provide annual reports to the City Commission by December 31st of each year, or by some other date as determined by the Committee. The Committee also shall provide a final report to the City Commission prior to sun-setting and completing its operations.

F. Subcommittees: By majority vote of the Committee Members present and voting, a subcommittee, task force, or work group, may be created to further the purpose of the Committee. Any such task force, work group, or sub-committee shall be made up of Committee members, and shall report their findings and/or recommendations

back to the Committee or action.

G. Staff Support: The City shall provide the Committee adequate staff and support services to enable the Committee to carry out its duties and responsibilities.

Section 5: Compensation. Members of the Committee shall receive no compensation for the performance of their duties and responsibilities.

Section 6: Sunset Provisions. Pursuant to City Resolution No. 18-R15, the Surtax shall be in effect only through December 31, 2028. It shall "sunset" and expire thereafter, without further action by any local government. The Committee shall remain in effect for the life of the Surtax imposed and until all Surtax proceeds are expended by the City Commission. Thereafter, the Committee shall automatically sunset.

Section 7: Effective Date: This Resolution shall take effect immediately upon its adoption.

IN WITNESS WHEREOF, this Resolution has been duly adopted this ___ day of _____, 2019.

_____
LINDA HUDSON, MAYOR

Attest:

_____
LINDA COX, CITY CLERK

(CITY SEAL)

Approved as to Form and Correctness:

_____
PETER J. SWEENEY, CITY ATTORNEY