REVIEWED

DIGITAL UNITS MAY BE ATTACHED
TO ONE OR BOTH FACES
UNITS CAN BE ATTACHED TO
WINDFRAME OR UPRIGHTS IF
WINDFRAME IS REMOVED.
CATWALKS ON FRONT AND BACK ARE
OPTIONAL IF DIGITAL UNITS ARE USED

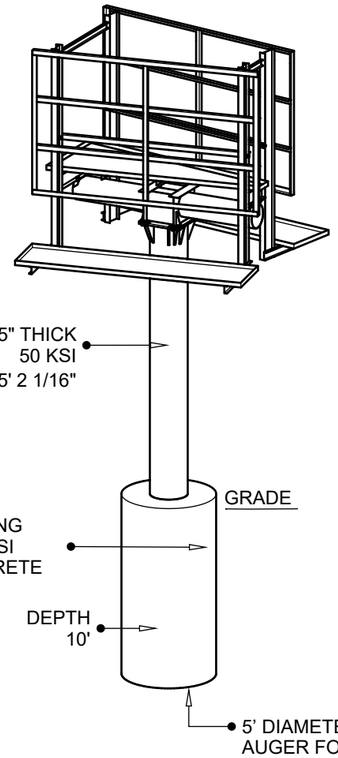

ISOMETRIC VIEW
1/8" = 1'-0"

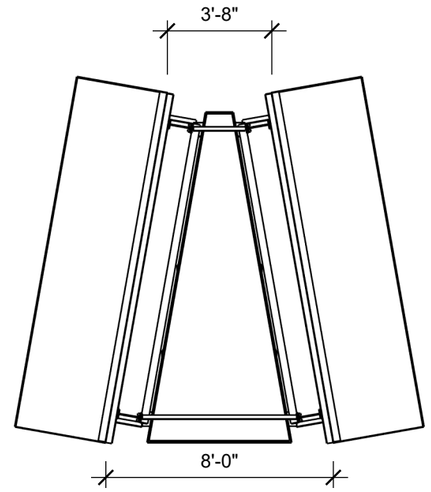

PLAN VIEW
FROM ABOVE
3/16"=1'-0"

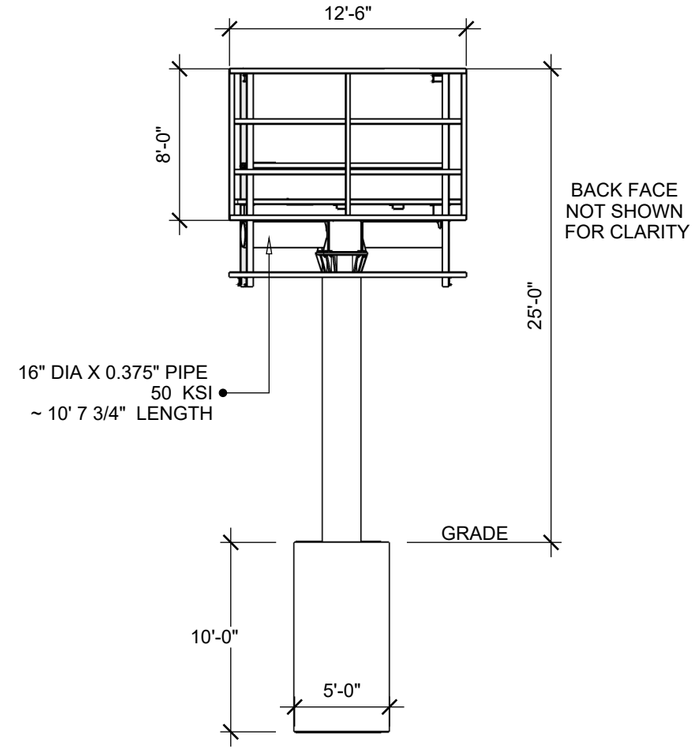

ELEVATION VIEW
PARALLEL TO FACE
1/8" = 1'-0"

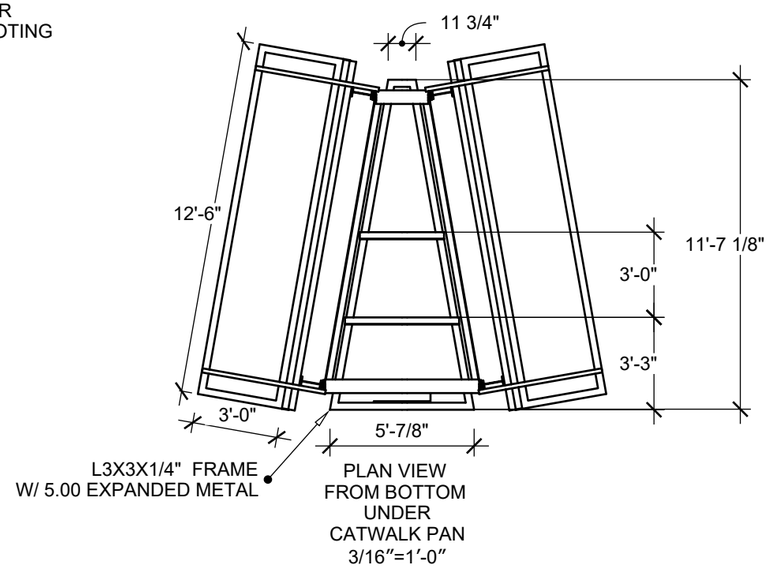

PLAN VIEW
FROM BOTTOM
UNDER
CATWALK PAN
3/16"=1'-0"

DESIGN CRITERIA 245-333

MEANS OF COMPLIANCE
2023 FBC - BUILDING, 8TH EDITION
DECEMBER 31, 2023 - PRESENT
INTERNATIONAL BUILDING CODE 2021
ASCE 7-22
RISK CATEGORY II
WIND DESIGN

VULT	159 mph
VASD	119 mph
WIND EXPOSURE CATEGORY	C
SEISMIC DESIGN	
IMPORTANCE FACTOR	1
SOIL CLASS	E
SDS	0.056 g
SD1	0.041 g
VS30	150 m/s
SEISMIC DESIGN CATEGORY	A
SOIL CAPACITY	2500 psf

FLOOD ZONE - AREA OF MINIMAL FLOOD HAZARD
NOTES:
ALL WELDS 3/16 FILLET ALL-AROUND UNLESS NOTED
ALL BOLTS 3/4" A325N UNLESS NOTED
CONCRETE 3000 PSI
PIPES ARE 50 KSI MIN YIELD STRENGTH

Rev	Desc	Date
0	Initial Release	07.17.2024
1	Address Change	07.31.2024
2	Engineering Seal enhanced	08.04.24

This item has been digitally signed and sealed by RONALD LEE KNOTT on the date adjacent to the seal.

Printed copies of this document are not considered signed and sealed and the signature must be verified on any electronic copies.

RONALD LEE KNOTT
LICENSE
No. 89798
STATE OF FLORIDA
PROFESSIONAL ENGINEER

2024.08.04 21:06:01-04'00'

MONOPOLE STEEL SIGN
LOCATION
1710 N US Hwy 1
Fort Pierce, FL

CLIENT
Scotty Outdoor, LLC
PO Box 974
Snow Hill,NC28580

REV 1
ISSUE 7.31.2024
REISSUE N/A

DESCRIPTION
Overall Views

ENGINEER
Ronald L Knott, P.E.
801 Cricket Knoll Rd
Fuquay Varina, NC 27526
(919)417-1962

S

01

245.333

REVIEWED

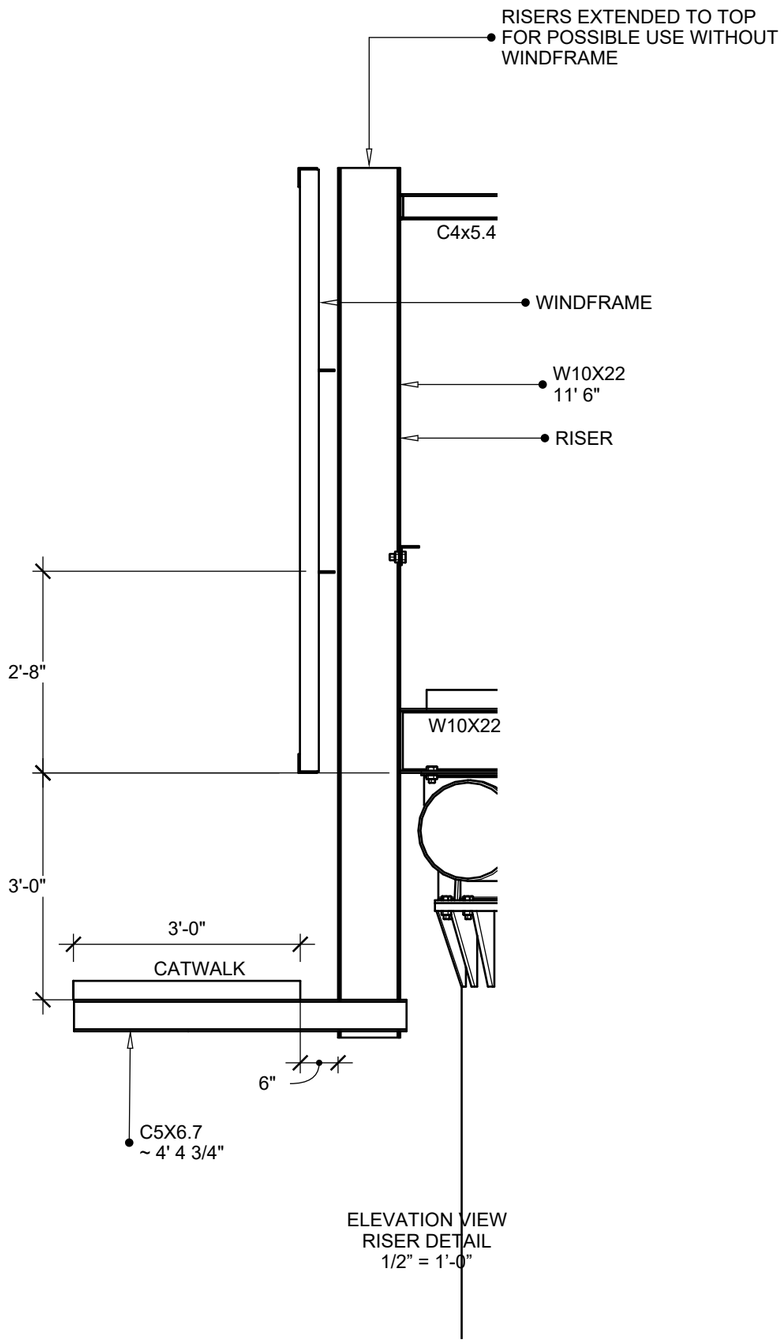

ELEVATION VIEW
RISER DETAIL
1/2" = 1'-0"

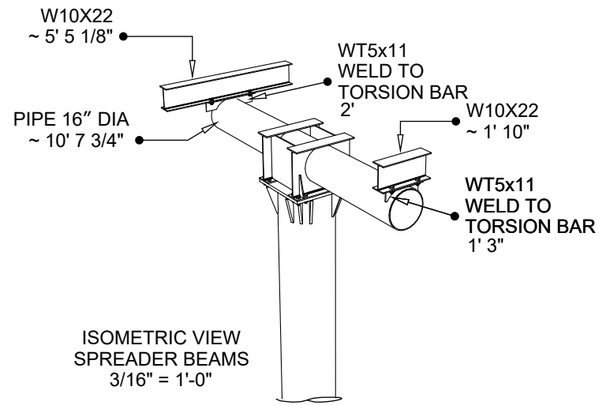

ISOMETRIC VIEW
SPREADER BEAMS
3/16" = 1'-0"

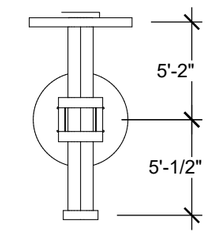

PLAN VIEW
SCALE 1/8" = 1'-0"

L3X3X1/4 WINDFRAME EXCEPT AS NOTED

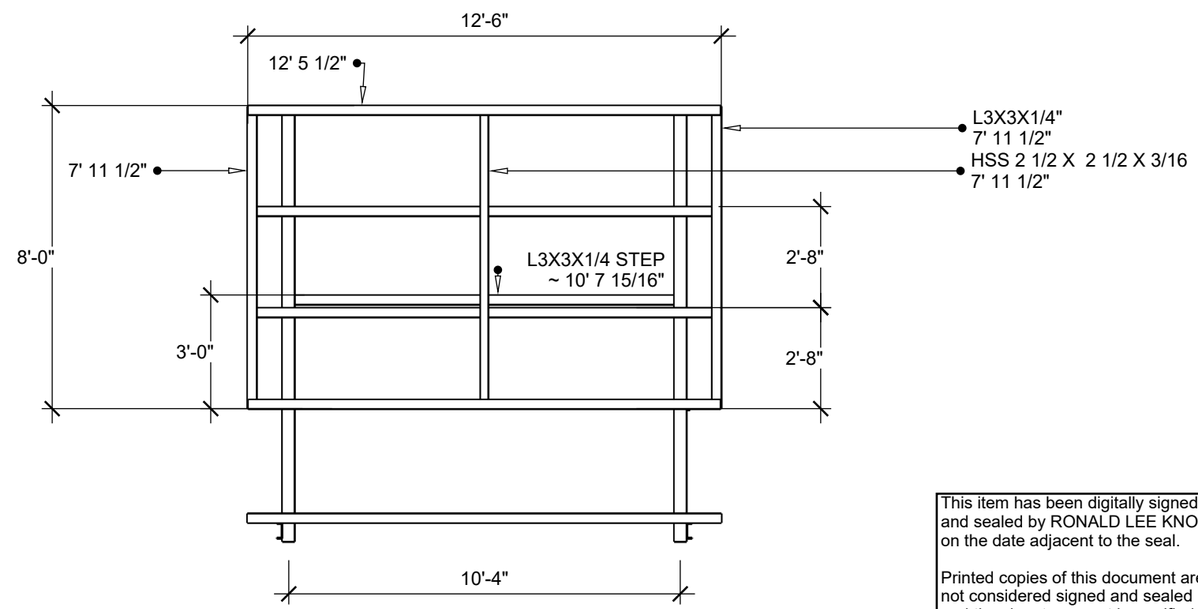

ELEVATION VIEW WINDFRAME
1/4" = 1'-0"

This item has been digitally signed and sealed by RONALD LEE KNOTT on the date adjacent to the seal.

Printed copies of this document are not considered signed and sealed and the signature must be verified on any electronic copies.

RONALD LEE KNOTT
LICENSE
No. 89798
STATE OF FLORIDA
PROFESSIONAL ENGINEER

2024.08.04
21:06:01-04'00'

MONOPOLE STEEL SIGN
LOCATION
1710 N US Hwy 1
Fort Pierce, FL

CLIENT
Scotty Outdoor, LLC
PO Box 974
Snow Hill,NC28580

REV 1
ISSUE
7.31.2024
REISSUE
N/A

DESCRIPTION
Windframe and Riser

ENGINEER
Ronald L Knott, P.E.
801 Cricket Knoll Rd
Fuquay Varina, NC 27526
(919)417-1962

S

02

245.333

REVIEWED

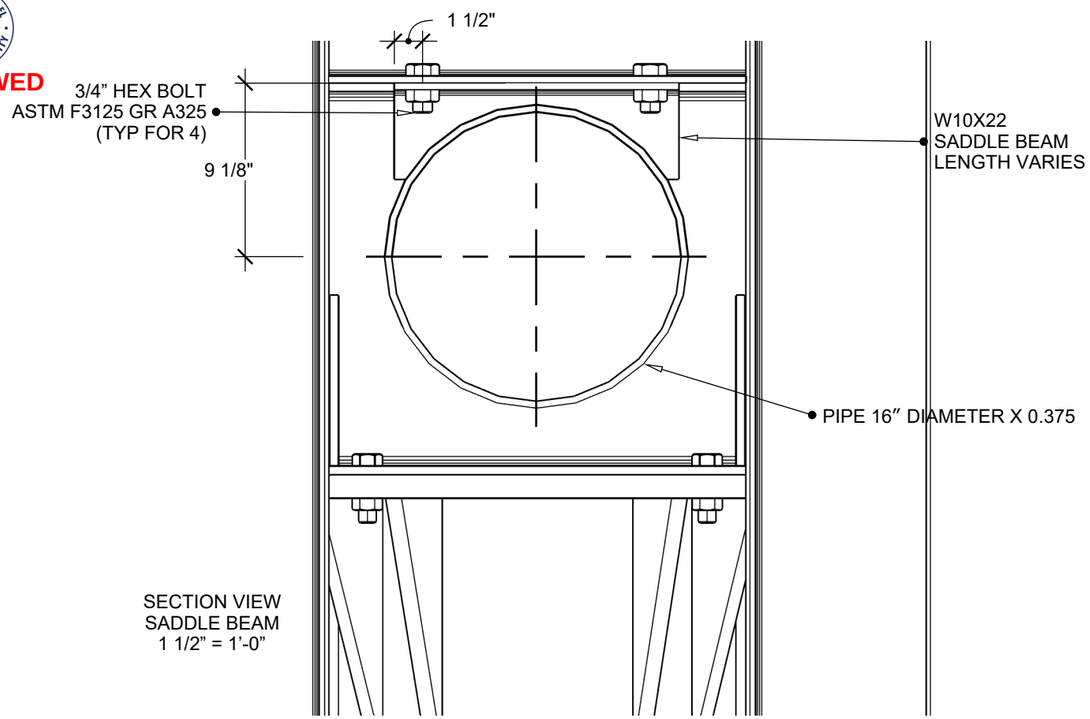

SECTION VIEW
SADDLE BEAM
1 1/2" = 1'-0"

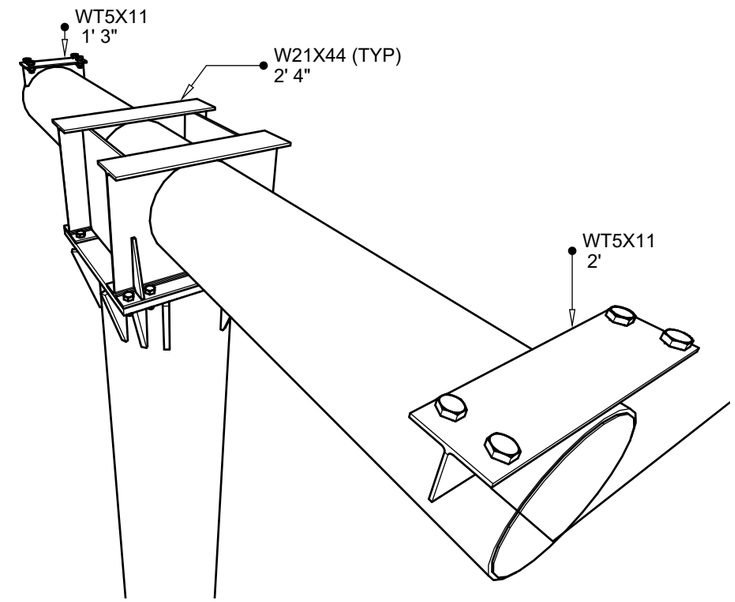

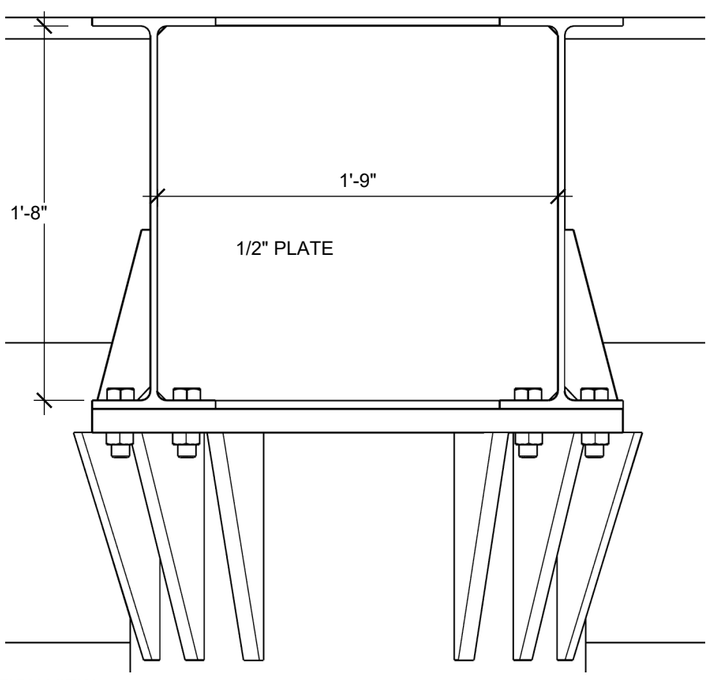

SECTION VIEW
WRAP BEAM
1 1/2″ = 1′-0″

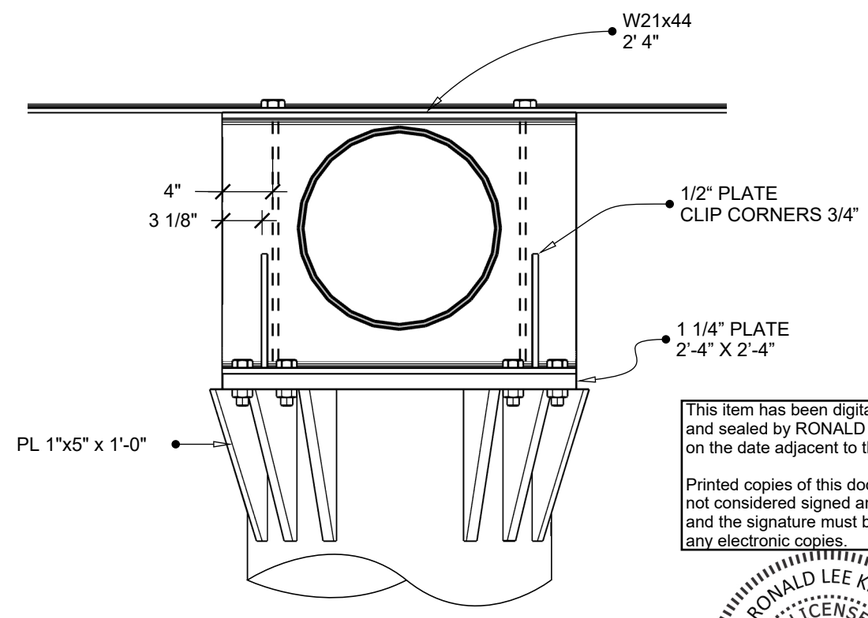

SECTION VIEW
AT WRAP BEAM
1" = 1'-0"

This item has been digitally signed and sealed by RONALD LEE KNOTT on the date adjacent to the seal.

Printed copies of this document are not considered signed and sealed and the signature must be verified on any electronic copies.

RONALD LEE KNOTT
LICENSE
No. 89798
STATE OF
FLORIDA
PROFESSIONAL ENGINEER

2024.08.04
21:06:01-04'00'

MONOPOLE STEEL SIGN
LOCATION
1710 N US Hwy 1
Fort Pierce, FL

CLIENT
Scotty Outdoor, LLC
PO Box 974
Snow Hill,NC28580

REV 1
ISSUE
7.31.2024
REISSUE
N/A

DESCRIPTION
Details

ENGINEER
Ronald L Knott, P.E.
801 Cricket Knoll Rd
Fuquay Varina, NC 27526
(919)417-1962

S

03

245.333

REVIEWED

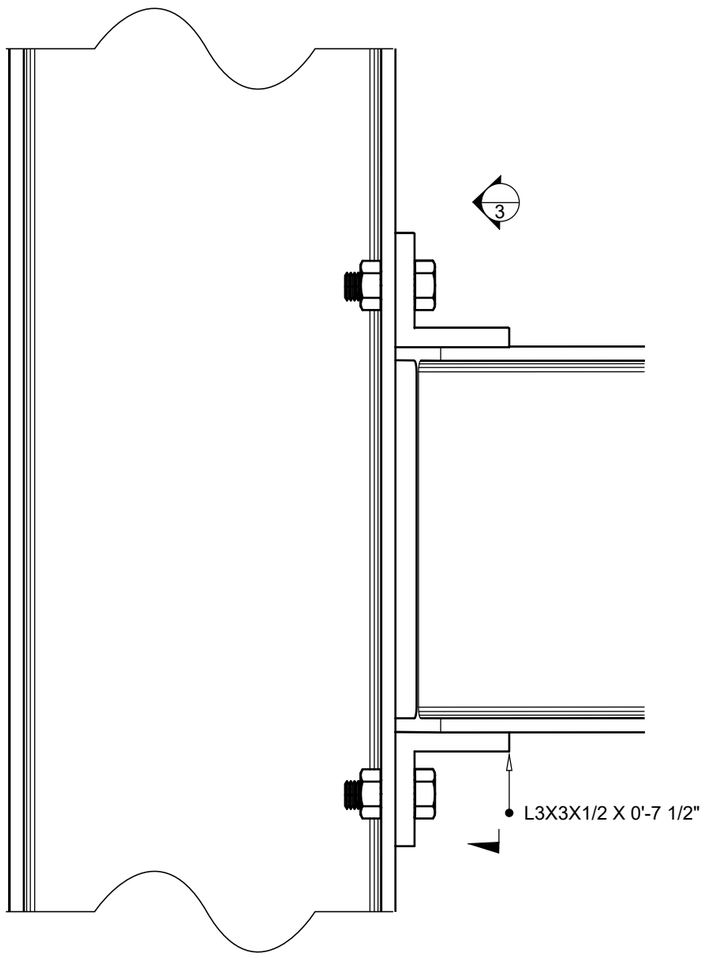

ELEVATION VIEW
W10X22 RISER TO W10X22 SPREADER
3" = 1' 0"

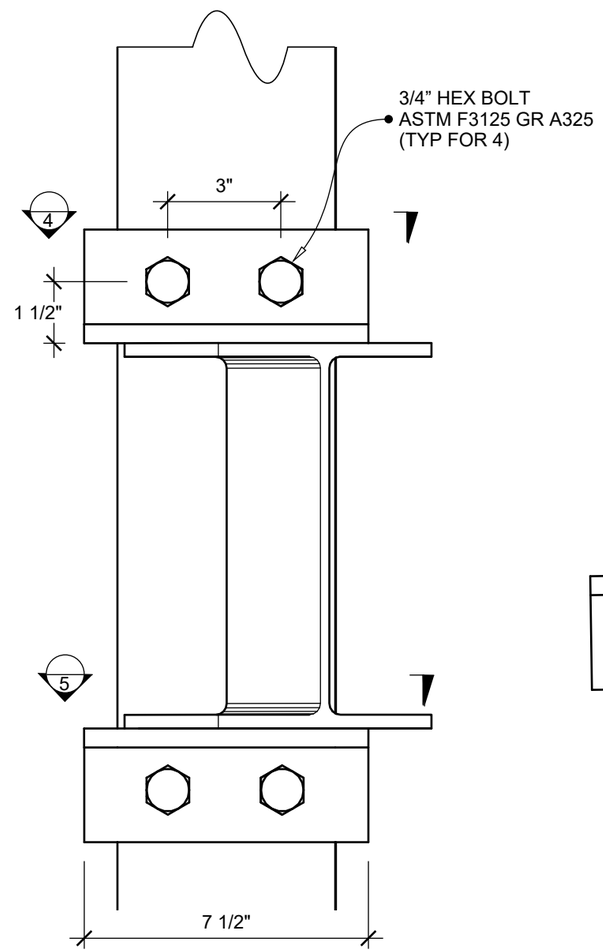

SECTION 3

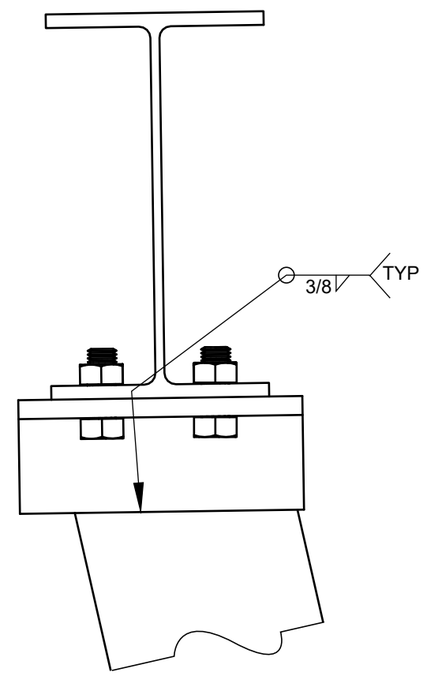

SECTION 4

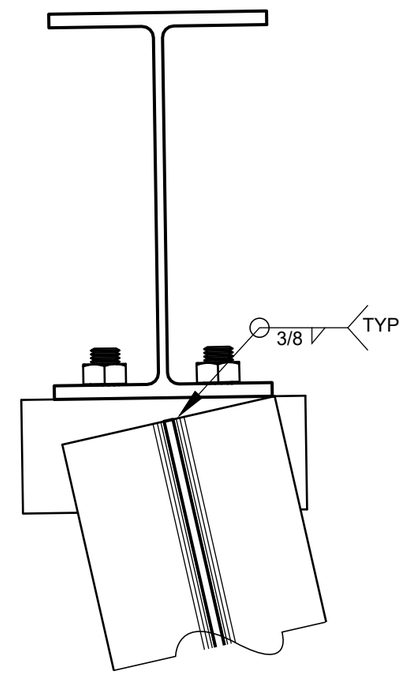

SECTION 5

USE SAME DETAIL FOR C4X5.4 CONNECTION TO RISER

This item has been digitally signed and sealed by RONALD LEE KNOTT on the date adjacent to the seal.

Printed copies of this document are not considered signed and sealed and the signature must be verified on any electronic copies.

RONALD LEE KNOTT
LICENSE
No. 89798
STATE OF
FLORIDA
PROFESSIONAL ENGINEER

2024.08.04
21:06:01-04'00'

MONOPOLE STEEL SIGN
LOCATION
1710 N US Hwy 1
Fort Pierce, FL

CLIENT
Scotty Outdoor, LLC
PO Box 974
Snow Hill,NC28580

REV 1
ISSUE
7.31.2024
REISSUE
N/A

DESCRIPTION
SPREADER TO RISER

ENGINEER
Ronald L Knott, P.E.
801 Cricket Knoll Rd
Fuquay Varina, NC 27526
(919)417-1962

S

04

245.333

REVIEWED

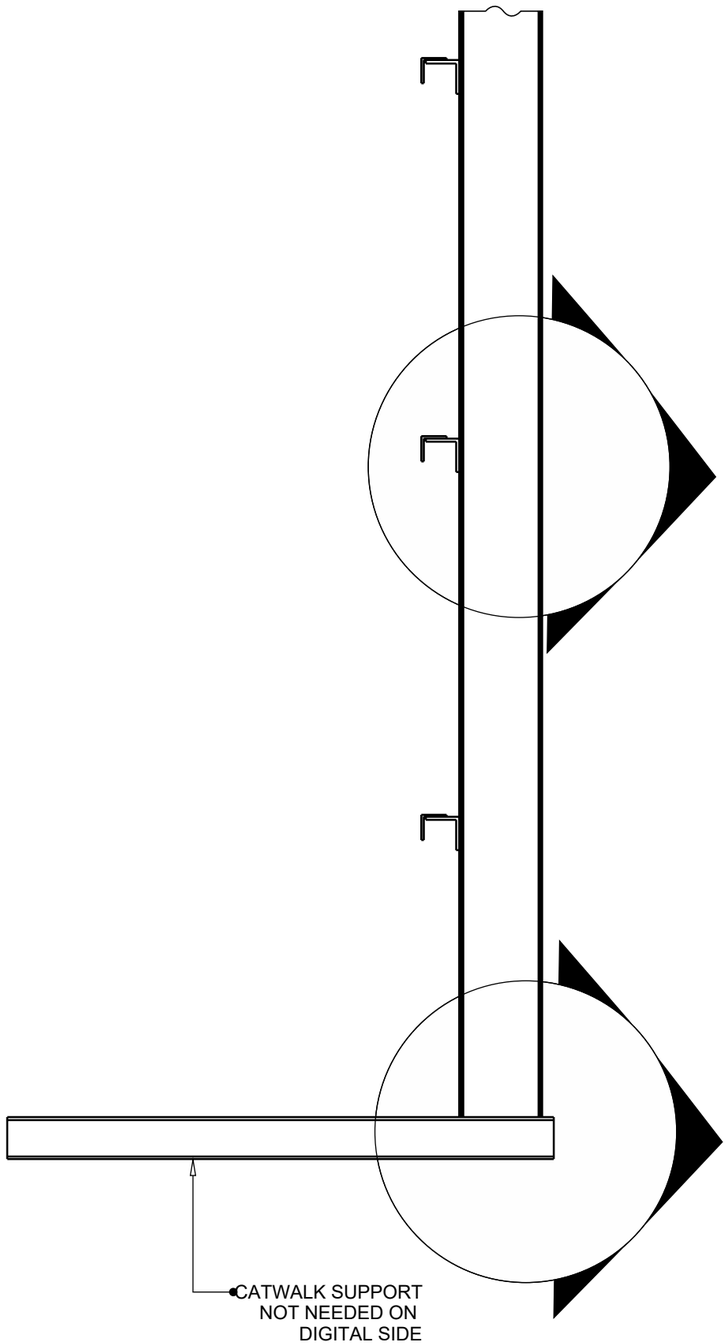

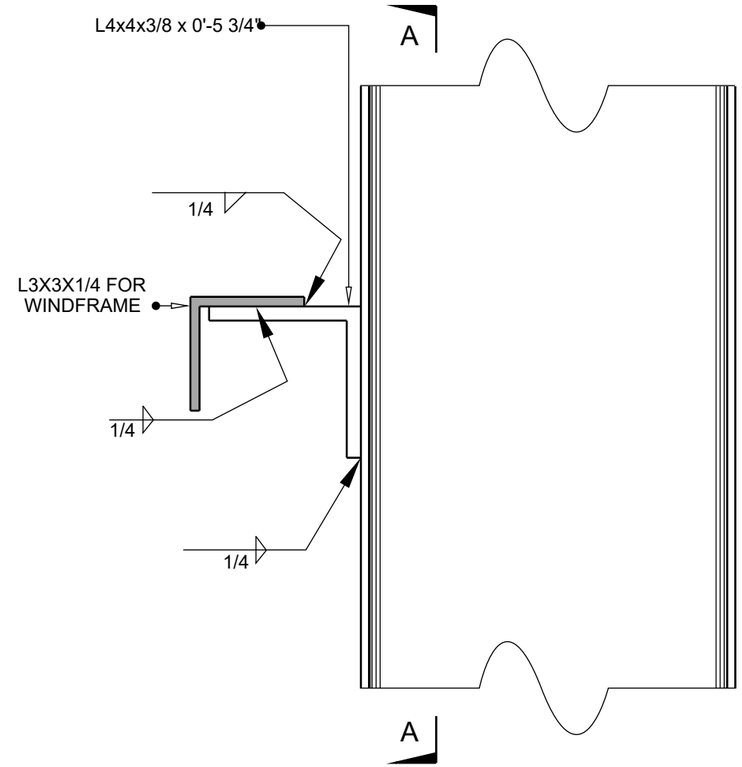

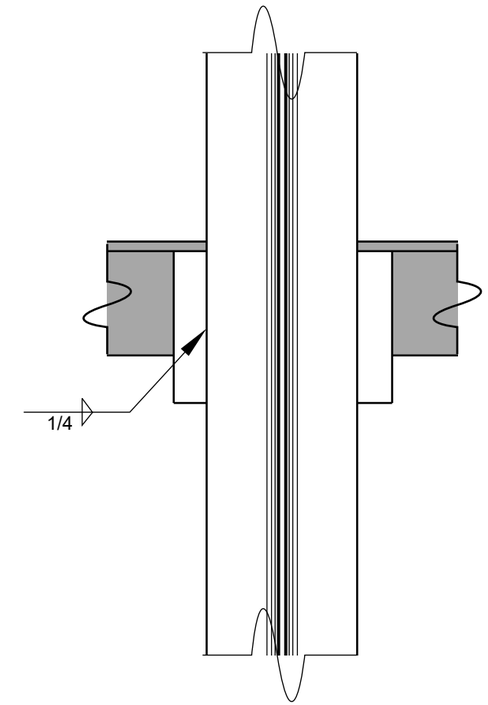

SECTION A-A
SCALE 3" = 1'-0"

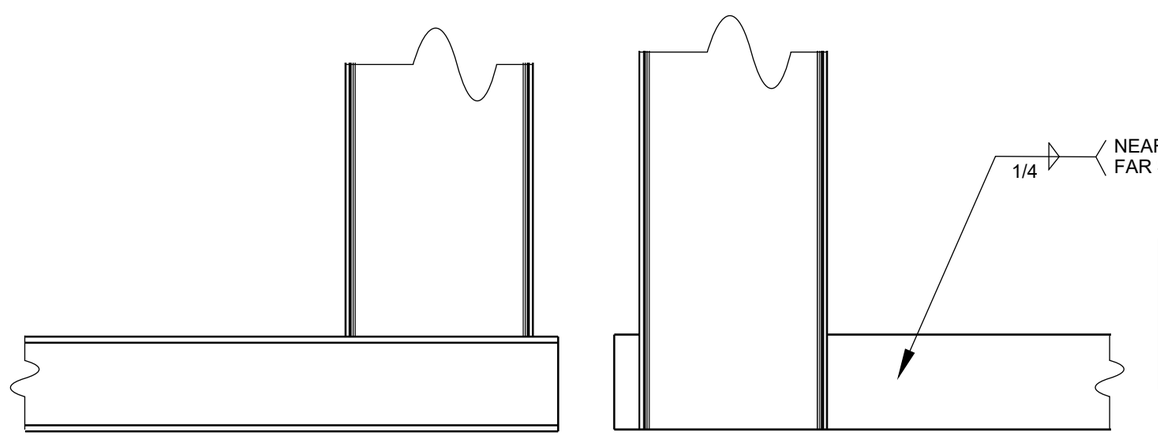

This item has been digitally signed and sealed by RONALD LEE KNOTT on the date adjacent to the seal.

Printed copies of this document are not considered signed and sealed and the signature must be verified on any electronic copies.

RONALD LEE KNOTT
LICENSE
No. 89798
STATE OF FLORIDA
PROFESSIONAL ENGINEER

2024.08.04
21:06:02-04'00'

MONOPOLE STEEL SIGN
LOCATION
1710 N US Hwy 1
Fort Pierce, FL

CLIENT
Scotty Outdoor, LLC
PO Box 974
Snow Hill,NC28580

REV 1
ISSUE
7.31.2024
REISSUE
N/A

DESCRIPTION
WINDFRAME
TO RISER

ENGINEER
Ronald L Knott, P.E.
801 Cricket Knoll Rd
Fuquay Varina, NC 27526
(919)417-1962

S

05

245.333

REVIEWED

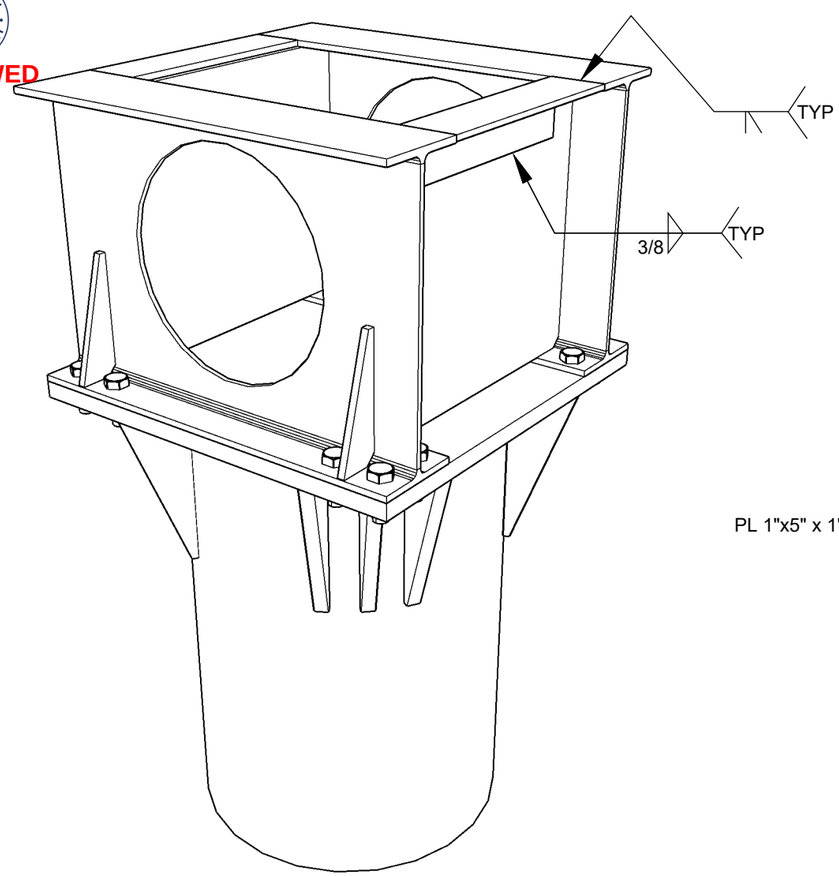

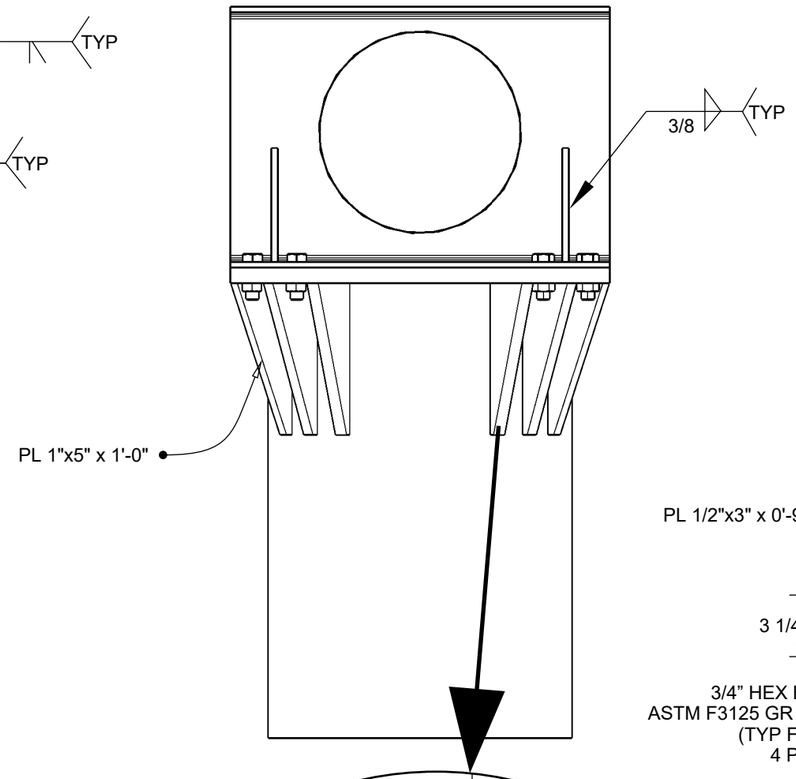

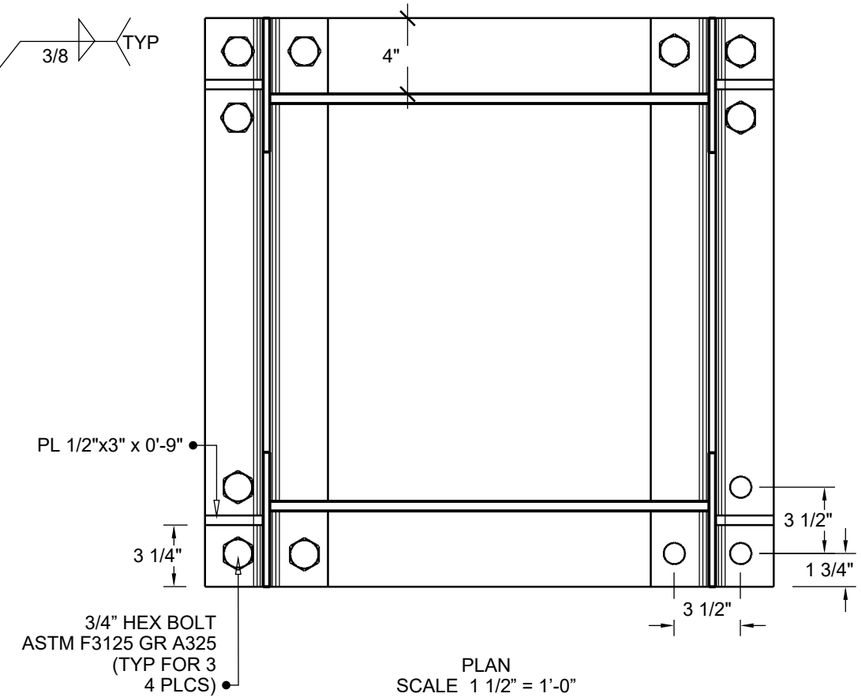

PLAN
SCALE 1 1/2" = 1'-0"

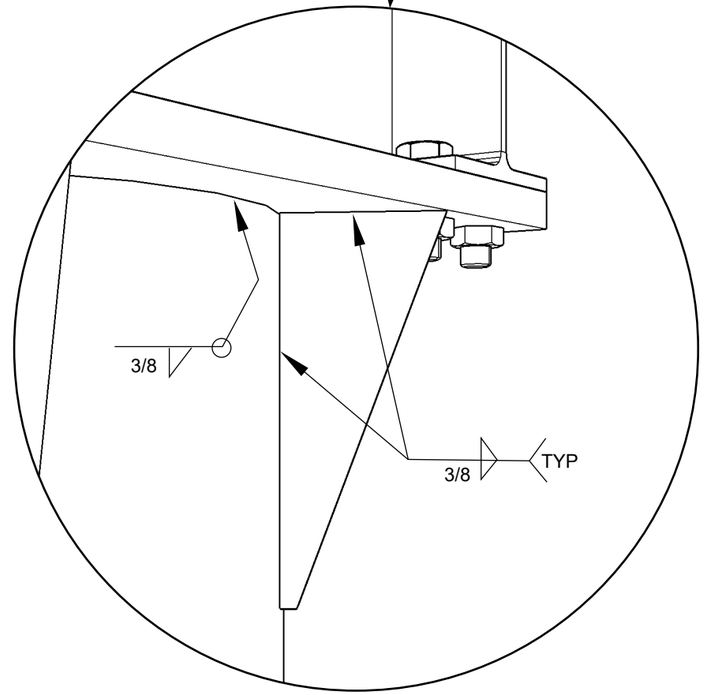

This item has been digitally signed and sealed by RONALD LEE KNOTT on the date adjacent to the seal.

Printed copies of this document are not considered signed and sealed and the signature must be verified on any electronic copies.

RONALD LEE KNOTT
LICENSE
No. 89798
STATE OF
FLORIDA
PROFESSIONAL ENGINEER

2024.08.04
21:06:02-04'00'

MONOPOLE STEEL SIGN

LOCATION
1710 N US Hwy 1
Fort Pierce, FL

CLIENT
Scotty Outdoor, LLC
PO Box 974
Snow Hill,NC28580

REV 1
ISSUE
7.31.2024
REISSUE
N/A

DESCRIPTION
HUB GUSSETS
AND BOLTS

ENGINEER
Ronald L Knott, P.E.
801 Cricket Knoll Rd
Fuquay Varina, NC 27526
(919)417-1962

S

06

245.333