CITY OF FORT PIERCE, FLORIDA
BUILDING DEPARTMENT
APPLICATION FOR BUILDING PERMIT
(772) 467-3718 FAX (772) 467-3849
ftpbuilding@cityoffortpierce.com

PERMIT # 22-4085
FBC (2020) 7th Edition
PIN # 108145

Building Department Project Manager:
PROJECT MANAGER
CECELIA

Note: Please contact David Speaker 937-238-6426 with questions.

532 S. US. Hwy.

*Property Address 0 US Hwy 1 Fort Pierce FL 34950 *Date 9/22/2022

Parcel ID# 2410-711-0060-000/6 *# of plans submitted 2 * # of CD's submitted 0
(Located on your tax bill)

*Owner Name Silver Shores Holdings LLC *Owner Address 719 Shore DR Vero Beach FL 32963

Phone # (772-) 231 - 7792 Fax # ( ) - Cell # ( ) -

Email Address N/A

***Required Information**

Type of permit Sign Permit *Valuation $ $80,000

*Description of Work: We are building a 10x20x2 back to back electronic billboard.

RECEIVED
OCT 28 2022
Building Department

Architect:

Phone( ) - Fax ( ) - Email Address

Engineer: Jermey Bowers

Phone(260) 333 - 0900 Fax ( ) - Email Address jbowers@bowerseng.com

***CONTRACTOR/APPLICANT INFORMATION:**

City License # State License # EC13004138

Company Name Ultra Lum Enterprises, INC Qualifier Mike Ziomek

Address 45 Lindsey Ave City/State Runnemede, NJ Zip 08078

Phone # (856) 207 - 5946 Fax # ( ) - Cell # ( ) -

Email Address mike@ultraluminc.com

Occupancy x Commercial Construction Type # of Units x # of Stories x

Sq. Ft. Conditioned Space x Total Sq. Ft. 400 sq ft

I understand that no building may be occupied until a Certificate of Occupancy/Certificate of Completion has been issued after final inspection by the Building Department and full compliance with the building code, city ordinances, state statutes and other applicable rules and regulations have been satisfied. I am also verifying that all sets of plans submitted are identical.

Application is hereby made to obtain a permit to do the work and installations as indicated. I certify that no work or installation has commenced prior to the issuance of a permit and that all work will be performed to meet the standards of all laws regulating construction in this jurisdiction. I understand that a separate permit must be secured for electrical work, plumbing, signs, wells, pools, furnaces, boilers, heaters, tanks, and air conditioners etc.

Owner's Affidavit: I certify that all the foregoing information is accurate and that all work will be done in compliance with all applicable laws regulating construction and zoning.

WARNING TO OWNER:
YOUR FAILURE TO RECORD A NOTICE OF COMMENCEMENT MAY RESULT IN YOUR PAYING TWICE FOR IMPROVEMENTS TO YOUR PROPERTY. A NOTICE OF COMMENCEMENT MUST BE RECORDED AND POSTED ON THE JOB SITE BEFORE THE FIRST INSPECTION.
IF YOU INTEND TO OBTAIN FINANCING, CONSULT WITH YOUR LENDER OR AN ATTORNEY BEFORE COMMENCING WORK OR RECORDING YOUR NOTICE OF COMMENCEMENT.

Must be signed by owner/Agent and applicant:

(Signature of contractor)
State of Florida, County of Pinellas
Affirmed to and subscribed before me this September 23rd, 2022, by Michael Ziomek
personally known to me or who has produced
as identification. FL Drivers License
Notary Signature:
Notary (print name) Brad Westermann

BRAD R WESTERMANN
Notary Public, State of Florida
Commission # GG 326474
My Comm. Expires Apr 22, 2023

(Signature of Owner or Agent (including contractor))
State of Florida, County of PINELLAS
Affirmed to and subscribed before me this SEPTEMER 30
2022, by MICHAEL ZIOMEK
personally known to me or who has produced
as identification.
Notary Signature:
Notary (print name) DAVID DOROUGH

Notary Public State of Florida
David Dorough
My Commission GG 273218
Expires 02/22/2023

Construction documents must accompany this application. The Florida energy code submitted becomes an integral part of this plan and must pass final inspection. "Notice: In addition to the requirements of this permit, there may be additional restrictions applicable to this property that may be found in the public record of this county, and there may be additional permits required from other governmental entities such as waste management district, state agencies, or federal agencies. "SIGNATURE OF THE APPLICANT MUST BE NOTARIZED. If owner builder, applicant must sign in person. BUILDING PERMIT includes: Building, Electrical, Plumbing, Mechanical, and Sewer only. All other trades require separate applications.

Asbestos compliance: It is the owner's or operator's responsibility to comply with section 469.003, Florida Statutes, and to notify the Department of Environmental Protection of his or her intentions to remove asbestos, when applicable, in accordance with state and federal law.

FEE SIMPLE TITLEHOLDER, BONDING COMPANY AND MORTGAGE LENDER INFORMATION IS REQUIRED WHEN THE AGGREGATE VALUE (TOTAL COST OF ALL IMPROVEMENTS AND NOT JUST WORK AUTHORIZED BY THE INDIVIDUAL PERMIT) IS $2500 OR MORE (EXCEPT HVAC REPAIR/REPLACEMENT< $7500). PLEASE ADDRESS ALL ITEMS.

Fee Simple Titleholder's ☒ **Same as Owner**
Name (if other than owner):
Address:
City: **State:** **Zip:**

Bonding Company ☒ **Not Applicable**
Name:
Address:
City: **State:** **Zip:**

Mortgage Lender's ☒ **Not Applicable**
Name:
Address:
City: **State:** **Zip:**

OFFICE USE ONLY

Is the property located in a Special Flood Hazard Area (floodplain) per the current Flood Insurance Rate Map (FIRM)

☐ Yes ☒ No CB

Flood Zone: Reviewed by: Determination:

Permit Fee	$ 1000.00	Other CC	$ 71.75	Plan Review Fee	$ 400.00
State Surcharge	$ 35.00	Other	$	Routing Fee	$
Subcontractor	$	Flood Review Fee	$	Other	$

Total Amount Due at Issuance $ 1506.75

DPCR# 22-20000567

Active Code Violation ☐ Yes ☒ No
Case #
Case Type

Reviewed by Date Final Check Date

THE SUNRISE CITY
FORT PIERCE
BUILDING DEPARTMENT Florida

Affidavit of Plan Review Compliance

22—

Permit # 22-20000567
DPCR

I, Mike Ziomek, acting as owner or agent of the below named contractor, do hereby attest that I have reviewed and accept the applicable building permit procedures and submittal checklists, which are available online at https://www.cityoffortpierce.com/991/Building-Permit-Procedures-and-Submittal and at the City of Fort Pierce Building Department. Further, I attest that the submitted permit application, including attachments, drawings, or other requirements of the completed permit application as provided for on the applicable permit submittal checklist(s), accurately reflect the scope of work to be completed at

0 US Hwy 1, Fort Pierce FL 34950 parcel ID 2410-711-0060-000/6.

(please print street address)

Scope of work submitted:

☒Building ☒Electrical ☐Flood ☐Gas ☐Mechanical ☐Plumbing

I acknowledge that failure to submit an accurate scope of work may result in a technical code review rejection, even if the application is initially deemed complete by the Fort Pierce Building Department. Revision fees may apply for such rejections.

Contractor Signature

STATE OF FLORIDA, COUNTY OF PINELLAS

NOTARY PUBLIC

The foregoing instrument was acknowledged before me

this 30th day of SEPTEMBER, 2022,

by MICHAEL ZIOMEK

Personally Known ✓ or Produced Identification

Type of Identification Produced:

Notary Public State of Florida
David Dorough
My Commission GG 273218
Expires 02/22/2023

Owner or Agent Signature (including contractor)

STATE OF FLORIDA, COUNTY OF PINELLAS

NOTARY PUBLIC

The foregoing instrument was acknowledged before me

this 30th day of SEPTEMBER, 2022,

by MICHAEL ZIOMEK

Personally Known ✓ or Produced Identification

Type of Identification Produced:

Notary Public State of Florida
David Dorough
My Commission GG 273218
Expires 02/22/2023

THE SUNRISE CITY
FORT PIERCE
BUILDING DEPARTMENT Florida

Debris Removal and Homeowners Association Affidavit

Owner: Silver Shores Holdings LLC

Property Address: 0 US Hwy 1, Fort Pierce FL 34950 parcel ID 2410-711-0060-000/6

Permit # 22-20000567 Contractor: Ultra Lum Enterprises INC

As per City Ordinances 30-25, 24-19, 24-20, 24-21 and as a condition of obtaining any permit for construction, repair or renovation:

I understand and accept full responsibility for the prompt removal of all debris and construction materials from the property for which I am seeking to obtain a building permit in accordance with the Code of Ordinances of the City. Initials MZ

I agree that no debris or construction materials will be placed on any public property or on any public right-of-way except as may be specifically authorized by the Code of Ordinances. Initials MZ

I further understand that prior to a final inspection for the project completion or issuance of a Certificate of Occupancy (or Certificate of Completion), all debris and construction materials shall be removed from the property or the Inspector will not approve the final inspection. Additional reinspection fees shall apply. Initials MZ

I understand and accept full responsibility for debris removal at my own expense in accordance with the City Code of Ordinances. Initials MZ

I hereby acknowledge that I have read and understand the above statements and I further understand that any violation of the terms of this affidavit shall be reported to the City of Fort Pierce Building Department for action and possible stop work order. Initials MZ

It is the owner and contractor's responsibility to verify approval for any work through the Homeowners Association and/or Condominium Association, if applicable. The City will not be held liable for disputes between the Homeowners Association, Condominium Association, owner and/or contractor. Initials MZ

9/30/22
Date

Contractor or Owner/Builder's Signature

Michelle Franklin, CFA -- Saint Lucie County Property Appraiser -- All rights reserved.

Property Identification

Site Address: S US HIGHWAY 1
Sec/Town/Range: 10/35S/40E
Parcel ID: 2410-711-0060-000-6
Jurisdiction: Fort Pierce

Use Type: 1000
Account #: 23771
Map ID: 24/10S
Zoning: General Co

Ownership

Silver Shores Holdings LLC
719 Shore DR
Vero Beach, FL 32963

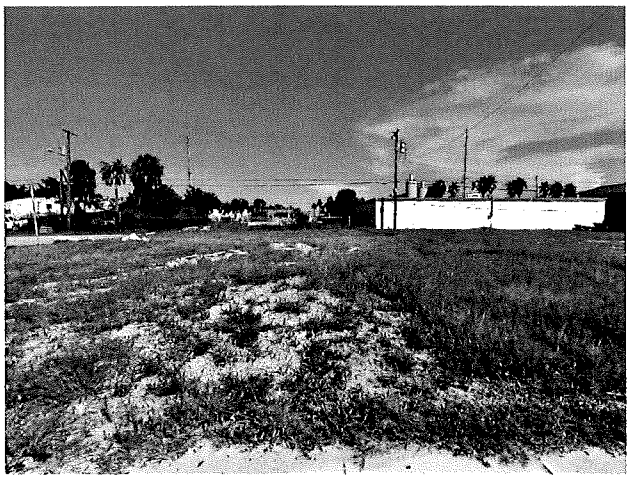

Legal Description

BLVD DEV CO'S S/D BLK D LOT 10 AND N 29.2 FT OF LOT 11 AND W 7.5 FT OF VAC ALLEY ADJ ON E (MAP 24/10F) (OR 3609-159)

Current Values

Just/Market Value:	$81,800
Assessed Value:	$50,270
Exemptions:	$0
Taxable Value:	$50,270

Property taxes are subject to change upon change of ownership.

- **Past taxes are not a reliable projection of future taxes.**
- **The sale of a property will prompt the removal of all exemptions, assessment caps, and special classifications.**

Taxes for this parcel: SLC Tax Collector's Office
Download TRIM for this parcel: Download PDF

Total Areas

Finished/Under Air (SF):	0
Gross Sketched Area (SF):	0
Land Size (acres):	0.23
Land Size (SF):	10,158

Building Design Wind Speed

Occupancy Category	I	II	III
Speed	140	160	160

Sources/links:

All information is believed to be correct at this time, but is subject to change and is provided without any warranty.
© Copyright 2022 Saint Lucie County Property Appraiser. All rights reserved.

532 S US Hwy 1
NAVilime

STATE OF FLORIDA DEPARTMENT OF TRANSPORTATION

APPLICATION FOR OUTDOOR ADVERTISING PERMIT

RE: Application for outdoor advertising sign permit

To be completed by applicant:

Name of Applicant or Company: Summit Locations, LLC "David Speaker"

Sign is: ☐ existing ☒ proposed

County: St. Lucie Municipality, if applicable: Fort Pierce

Highway Name & Number: US Highway 1/FL State Route 5

Sign location description: 0 S US Highway 1 Fort Pierce FL 34950

Property Tax ID#: 2410-711-0060-000/6

Is this sign site intended to be qualified under reduced spacing as authorized by Section 479.07(9)(c), Florida Statutes?

☐ **Yes** ☒ **No**

If Yes, you must submit the following documents with this application package:

(a) A copy of the local government adopted policy, ordinance, or other official document authorizing the placement of a new outdoor advertising sign on an interstate highway in exchange for the removal of an existing sign or signs; and

(b) A copy of the agreement between the Applicant and the local government identifying the sign(s) to be removed and approving the location that is the subject of this application.

LOCAL GOVERNMENT PERMISSION

Local Government Permission: Please complete the items below. You may submit another form of written statement indicating that the sign complies with all local governmental requirements. For a proposed sign location, a copy of the building permit issued by the local government may be submitted.

The outdoor advertising sign identified in this application:

- ☐ Is in compliance with all duly adopted local ordinances and has been or will be issued the necessary permits.
- ☐ Is not in compliance with local ordinances, but is legally existing as a non-conforming sign.
- ☐ Is not in compliance with local ordinances and is/would be considered to be an illegally maintained structure.

I certify that I represent the governmental entity within whose jurisdiction the sign described herein is located and that the determination reflected in this section is made under my delegated authority.

Signature of Local Government Official Date

Printed Name and Title

NOTE: Form must be completed not more than six (6) months prior to receipt of the completed outdoor advertising permit application by the Department.

Certification and Authorization:

(1) By my signature hereto, I do hereby certify that the information contained in this Application is true and correct, and understand that deliberate misrepresentation of such information will be grounds for denial and reversal of this Application and or revocation of any approval based on this Application.

(2) I do hereby authorize Town staff to enter upon my property at any reasonable time for the purpose of site inspection.

(3) I do hereby authorize the placement of a public notice sign(s) on my property at a location(s) to be determined by Town staff.

(4) I David Speaker (print name) as the property owner or authorized property owner representative have read and understand the attached information concerning Application for Development Order.

Signature of Owner or Agent

David Speaker
Print name

Summit Locations Permitter
Title and Company (if applicable)

Date: 9/19/2022

Jessica Wise
Notary as to Owner or Agent

NOTARIAL SEAL STATE OF OHIO
JESSICA WISE
Notary Public, State of Ohio
My Commission Expires
June 29, 2027

My commission expires:

Signature of Developer

Michael Ziomek
Print name

owner
Title and Company (if applicable)

Date: 9/21/22

Notary as to Developer

JOSEPH BROADUS
Notary Public - State of Florida
Commission # HH 076659
My Comm. Expires Apr 20, 2025
Bonded through National Notary Assn.

Application approved by: _____ Town Manager.

Cecelia Bacener

From: Ryan Altizer
Sent: Wednesday, August 24, 2022 9:01 AM
To: Cecelia Bacener; Planning Department
Cc: Wesley Rutledge
Subject: RE: DPCR 22-20000567 532 S US Hwy REVISION

Hello all,

The revised dimensions for the off-premises sign are approved by the Planning Department on Naviline.

Thank you,
Ryan

From: Cecelia Bacener <cbacener@cityoffortpierce.com>
Sent: Friday, July 8, 2022 4:18 PM
To: Planning Department <planning@cityoffortpierce.com>
Cc: Wesley Rutledge <wesley@summitlocations.com>
Subject: DPCR 22-20000567 532 S US Hwy REVISION

Good afternoon

Reviewers: The attached application/plan(s) have been submitted for your review. Paper plans, if applicable, have been routed via inter-office mail. Upon completion of your review, enter your approval, approval with conditions, or rejection with comments into Naviline. Also, "Reply All" to this email with your approval, approval with condition(s), or rejection with comments. Please do not return any paper plans to the Building Department.

Applicant: This email is being provided for your information and tracking purposes. All the review agencies above will reply to this email with their approval, approval with conditions, or rejection with comments. Upon approval from all required departments, you'll receive a final approval email from the Building Department advising of the status of your review and ability to apply for the building permit. In the event of a rejection, please wait until you receive all review comments before submitting revisions.

Cecelia Bacener| Temp Permit Specialist | City of Fort Pierce
Phone: 772-467-3723 Fax: 772.467-3849 100 North U.S. 1 Fort Pierce, FL 34950
Website | Facebook | Survey

THE SUNRISE CITY
FORT PIERCE
Florida

"To provide community leadership, quality public service, and a safe environment for all citizens, by an empowered team of employees motivated by pride in themselves and their work.

REVISIONS FOR PERMITTED PROJECTS

Received: 6/30/2022 Date of Revision: 7/8/2022 Permit#: DPCR # 22-20000567

Number of Plans: 3 signed and sealed plans △ SIGNED AND SEALED △ CD

Commercial (3 Sets of Signed & Sealed Plans w/CD)
Residential: (2 Sets Signed & Sealed Plans)

Project Name: Summit Locations Billboard Sign

Project Address: 532 S US HWY

Contractor's Name: TBD

Contact Person To Call: Wesley Rutledge

Phone #: (973) 952 - 4366 Fax/Cell#:

Detailed Description of Revision: **CHANGE IN VALUATION:** none

Changing the height of the structure from a 25' 6" to a 25' billboard sign

REVISIONS:

1. **Must be accompanied with a narrative of changes and/or corrections.**
2. **Must be clouded.**
3. **1ST REVISION JOB VALUE UNDER $5,000 $ 25.00 PER PAGE**
   JOB VALUE OVER $5,000 $ 50.00 PER PAGE

   2ND REVISION JOB VALUE UNDER $5,000 $ 50.00 PER PAGE
   JOB VALUE OVER $5,000 $100.00 PER PAGE

   3RD REVISION /MORE JOB VALUE UNDER $5,000 $100.00 PER PAGE
   JOB VALUE OVER $5,000 $200.00 PER PAGE

   3rd REVISION OR MORE 4 TIMES PLAN REVIEW FEE ASSESSED
   (IF ADDRESSING SAME DEFICIENCY/VIOLATION)

Site Plan: Silver Shores Holdings LLC **Address:** 0 S US HIGHWAY 1

Coordinates (Pole): 27.4419630349, -80.3256859898

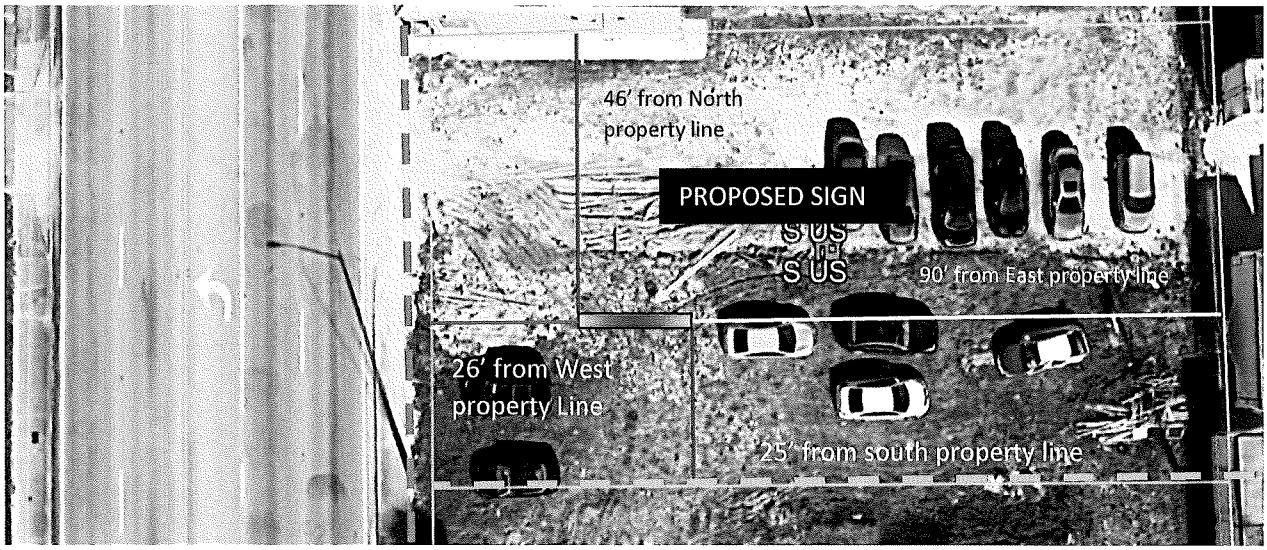

ROW Line

Power Line

RECEIVED
OCT 31 2022
Building Department

FORT PIERCE
BUILDING DEPARTMENT Florida

DPCR#

Routing Form for All Other Permit Types

BP# 22-4085

PM Cecelia

Address: 532 S. US Hwy 1

Application Fees paid on (Column D) 11-1-22

Review for Completeness by (E) **10 calendar days**..... 11-11-22

Complete Full Review by (H) **45 calendar days**.....

Revisions Fees paid on (K) .....

Revisions must be approved by (L) **120 calendar days**.....

Building: Y Reviewed By: AJ

Comments:

Electrical: Y Reviewed By: AP

Comments:

Flood: Reviewed By:

Comments:

Mechanical: Reviewed By:

Comments:

Plumbing: Reviewed By:

Comments:

THE SUNRISE CITY
FORT PIERCE
BUILDING DEPARTMENT Florida

CODE IN EFFECT
FBC 7TH EDITION (2020)

PERMIT FOR CONSTRUCTION

Issued Date: 11/ /22 Permit No: 22-4085

This is to certify that: Silver Stones Holdings LLC

Has permission to construct/replace: SIGN

At: 5325 US Hwy 1 Contractor: VITRA LUM Enterprises, INC

The permitholder shall conform to all terms and conditions of the permit on file with the Building Department and to all applicable Florida State Statutes, Building Codes, and City of Fort Pierce Ordinances regulating contracting and construction.

This permit card, approved permit application, approved plans and all supporting documents shall be displayed on the jobsite in a conspicuous location and available for all inspections until all work is complete, and all required inspections have been approved.

Work shall commence within 6 months. An approved inspection is required within 180 days and every 180 days thereafter until all required inspections have been approved.

For new construction or a change of use and/or occupancy, a Certificate of Occupancy must be obtained prior to any occupancy.

The permitholder shall comply with all permit conditions, including but not limited to obtaining separate permits when required. Violating any of the terms or conditions above will result in immediate revocation of this permit.

WARNING TO OWNER: YOUR FAILURE TO RECORD A NOTICE OF COMMENCEMENT MAY RESULT IN YOUR PAYING TWICE FOR IMPROVEMENTS TO YOUR PROPERTY. A NOTICE OF COMMENCEMENT MUST BE RECORDED AND POSTED ON THE JOB SITE BEFORE THE FIRST INSPECTION. IF YOU INTEND TO OBTAIN FINANCING, CONSULT WITH YOUR LENDER OR AN ATTORNEY BEFORE RECORDING YOUR NOTICE OF COMMENCEMENT.

Post this permit card—See back of permit card for inspection instructions.

THE SUNRISE CITY
FORT PIERCE
BUILDING DEPARTMENT Florida

Permit #: 22-4085

Inspection Requirements:

1. Inspections may be scheduled between 5:45 AM to 11:00 PM for the next day. To schedule an inspection, call (772)242-9843 or schedule online using our Click2Gov portal at www.cityoffortpierce.com/131/Building-Department
2. This permit card, approved application, approved plans, all supporting documents and the notice of commencement (if applicable) shall be posted in a conspicuous location on the job site, and available for all inspections.
3. If the permit card, approved application, approved plans and all supporting documents are not displayed in a conspicuous location, a stop work order may be issued. All work shall cease and the stop work order fee shall be paid prior to work resuming.
4. If the permit card, approved application, approved plans, all supporting documents and the notice of commencement are not available at the time of inspection, the inspection will be disapproved, and a re-inspection fee must be paid prior to scheduling any additional inspections.
5. It shall be the duty of the holder of the building permit, or their duly authorized agent to notify the Building Department when work is ready for inspection and to provide access to and means for inspections of such work that are required by the FBC. If the permitholder or authorized agent is not on-site for the inspection and/or if access is not provided, the inspection will be disapproved, and a re-inspection fee must be paid prior to scheduling any additional inspections.
6. Additional inspections other than the ones listed below may be required. The Building Official reserves the right to require additional inspections other than those listed in FBC Section 110.3.
7. **Warning: A Notice of Commencement is required to be recorded and submitted to the Building Department prior to scheduling the first inspection and shall be on-site with the permit:**

☐ Yes ☐ No

Building	Plumbing/Sewer/Gas	Electrical	Mechanical
Foundation/Slab _____	Rough-in _____	Underground _____	Underground _____
Structural/Framing _____	Top-out _____	Rough-in _____	Rough Duct _____
Final _____	Final _____	Power on _____	Final _____
		Final _____	

Type of Inspection	Date	Inspector	Result/Comments

Click 2 Gov

On- Line Inspection Scheduling and Inquiry System

To access our system please go to:
https://ftp-eppv.appgov.com/Click2GovBP/index.html

Pin # 108148

On- Line System is available 24hr

Option 2:

Phone Inspection Scheduling System

Interactive Voice Response

772-242-9843

Phone System is available 5:45am to 11:00pm

BUILDING INSPECTIONS

101	ABOVE CEILING
104	CANOPY FINAL
105	COLUMNS
106	CONTR CL OUT
107	COURTESY INSP
108	DEMOLITION FINAL
109	DOCK
110	DOWN CELLS
111	DRIVEWAY
112	DRIVEWAY ENG
113	BLDG -DRY IN
114	DRYWALL
115.	DUMPSTER ENCL
117	ELEVATOR
119	ENGINEERING FINAL
120	FILL CELL
121	FILL COMPACTION
116	FLOOD VENT ROUGH
169	FLOOD VENT FINAL
122	BUILDING FINAL
123	FINAL DECK
126	FIRE SERVICE UG
127	FIRE WALL
128	FIRESTOPPING
129	FLOOR
130	FLOOR FINAL
131	FOOTING STEEL
134	FOUNDATION
137	FRAMING

135	INSULATION
138	LANDSCAPING
139	PAVING FINAL
140	PILE CAPS
141	REBAR
142	REFRIG COOLER
144	SCREEN FINAL
145	BLDG SHEATHING
146	SHED FINAL
147	SHUTTER FINAL
148	SIDEWALK
149	SIDING
151	SLAB
152	BLDG SPRINKLER
153	STAIRWAYS
154	STEEL
156	STEM WALL
158	STUCCO
159	SUB GRADE
160	TEMP TRAILERFINAL
161	TIE BEAM
162	TIE DOWNS
163	TILT WALL
164	WIND BRACE
170	WINDOW/DOOR BUCK
165	WINDOWS DOORS
166	WIRE LATH
168	TENT FINAL

ELECTRICAL INSPECTIONS

200	DISCONNECT
201	ABOVE CEILING
202	COURTESY INSP
203	FINAL
204	FLOOR FINAL
205	GROUNDING
207	POWER ON
209	REFRIG COOLER
210	ROUGH IN
211	SERVICE
212	TEMPORARY POLE
213	UFER GROUND
214	UNDER SLAB
215	UNDERGROUND
216	GENERATOR FINAL

FENCE INSPECTIONS

300	FINAL
301	IN PROGRESS

MECH INSPECTIONS

400	ABOVE CEILING
402	EXH HOOD FINAL
403	EXH HOOD ROUGH
404	FINAL
411	FIRE DAMPER
405	FLOOR FINAL
406	REFR COOLER
407	REFR LINES
408	DUCT ROUGH
409	SLAB
410	UNDERGROUND
127	FIRE WALL

MOBILE HOME INSPECTIONS

500	ELECTRIC
501	BLDG INSTALLATION
502	MECHANICAL
503	PLUMBING

OTHER INSPECTION TYPE

178	FLOOD COMPLIANCE FINAL

ROOF INSPECTIONS

600	DRY IN
601	FINAL
602	IN PROGRESS
603	SHEATHING

PLUMBING / GAS INSPECTIONS

700	ABOVE CEILING
701	COURTESY INSP
702	FINAL PLUMBING
703	FLOOR FINAL
718	FUEL TANK TIE DOWN
704	GAS FINAL
705	GAS PIPING
706	GREASE TRAP
707	IRRIGATION FINAL
708	REFR COOLERS
709	ROUGH IN
710	SEWER FINAL
717	SOLAR PANEL
711	SOLAR WATER HEATER
712	TOP OUT ROUGH
713	UNDERGROUND
714	UNDERGROUND GAS
715	WATER SERVICE

POOL INSPECTIONS

800	POOL FINAL
802	DECK
803	ELEC BONDING
804	ELECTRICAL FINAL
805	ELEC INSPECTION
806	POOL ENCLOSURE
807	POOL FENCE
809	PLUMBING ROUGH
810	PLUMBING FINAL
811	STEEL AND GROUND
812	TEMPORARY FENCE

SIGN INSPECTIONS

900	FINAL
901	FOOTING FOUNDATION
902	SIGN INSPECTION

"FAILURE TO COMPLY WITH THE MECHANICS' LIEN LAW CAN RESULT IN THE PROPERTY OWNER PAYING TWICE FOR BUILDING IMPROVEMENTS"

CITY OF FORT PIERCE
BUILDING DEPARTMENT
100 North US 1
Post Office Box 1480
Fort Pierce, FL. 34954
Phone: (772) 467-3000

FORT PIERCE, FL · THE SUNRISE CITY

Date Applied: 10/31/22

Prepared by: COARCNER

Date issued: 11/08/22

Permit Type: SIGN PERMIT

Permit No. 2200004035 2

Township	Range	Section	Subdivision	Lot			Structure #/Sequence
3	4	10	711	0060	00	0 6	000 000

Property Address	Zoning	Reviewed by
535 S US HWY 1	NA	BL

Subdivision Name	Legal Address
BOULEVARD DELVELOPMENT CO.	BLVD DEV CO'S S/D BLK D LOT 10

Owner's Name/Address/Telephone	Contractor's Name/Address/License/Telephone
SILVER SHORES HOLDING LLC 759 SHORE DR 32963 7 216-8163	ULTRA-LUM ENTERPRISES, INC. PO BOX 3588 34603 856 207-5946

Additional Description	Sub Contractor

Construction	BFE	FFE	FLZ

Occupancy	Sq. Ft.	Valuation	Improvements
		20,000	SIGNS

Schedule of Fees

THIS PERMIT SHALL BECOME NULL AND VOID UNLESS THE WORK AUTHORIZED IS COMMENCED WITHIN ONE HUNDRED AND EIGHTY (180) DAYS AFTER ITS ISSUANCE, OR IF THE WORK AUTHORIZED IS NOT INSPECTED FOR A PERIOD OF ONE HUNDRED AND EIGHTY (180) DAYS FROM TIME WORK IS COMPLETED. THE FLORIDA ENERGY CODE SUBMITTED BECOMES AN INTEGRAL PART OF THIS PLAN AND MUST PASS FINAL INSPECTION.

Any change in building plans or specifications must be recorded with this office. Any work not covered above, must have a valid permit prior to starting. In consideration of the granting of this permit, the owner and builder agree to erect this structure in full compliance with the Building and Zoning Codes of the City of Fort Pierce, Florida. This permit fee is not refundable.

120421

MICHELLE R. MILLER, CLERK OF THE CIRCUIT COURT - SAINT LUCIE COUNTY
FILE # 5177429 OR BOOK 4973 PAGE 1995, Recorded 04/11/2023 09:22:11 AM

NOTICE OF COMMENCEMENT

Permit No. 22-4085 **Tax Folio No.** 2410-711-0060-000/6

State of Florida County of St. Lucie

The undersigned hereby gives notice that improvement will be made to certain real property, and in accordance with Chapter 713, Florida Statutes, the following information is provided in this Notice of Commencement.

Legal Description of Property: (and street address if available):
BLVD DEV CO'S S/D BLK D LOT 10 AND N 29.2 FT OF LOT 11 AND W 7.5 FT OF VAC ALLEY ADJ ON E (MAP 24/10F) (OR 3609-159)

General description of improvement: Build a 9.5x21 digital billboard

Owner information or Lessee information if the Lessee contracted for the improvement:
Name Joe Cala DBA Summit Locations LLC
Address 562 Congress Park Dr Centerville OH 45459
Interest in property: Lessee
Name and address of fee simple titleholder (if different from Owner listed above):

Contractor's Name: Ultra Lum Enterprises INC
Contractor Address: PO Box 2188 Palm Harbor FL 34682 Phone Number: 856-207-5946

Surety (if applicable, a copy of the payment bond is attached): Amount of bond: $ N/A
Name and address: N/A Phone number:

Lender Name: N/A Phone Number:
Lender's address:

Persons within the State of Florida designated by Owner upon whom notices or other documents may be served as provided by Section 713.13(1)(a)7., Florida Statutes:
Name: N/A Phone Number:
Address:

In addition to himself or herself, Owner designates _____ of _____ to receive a copy of the Lienor's Notice as provided in Section 713.13(1)(b), Florida Statutes.
Phone number of person or entity designated by owner: N/A

Expiration date of notice of commencement: (the expiration date may not be before the completion of construction and final payment to the contractor, but will be 1 year from the date of recording unless a different date is specified) 4/10/2024.

WARNING TO OWNER: ANY PAYMENTS MADE BY THE OWNER AFTER THE EXPIRATION OF THE NOTICE OF COMMENCEMENT ARE CONSIDERED IMPROPER PAYMENTS UNDER CHAPTER 713, PART I, SECTION 713.13, FLORIDA STATUTES, AND CAN RESULT IN YOUR PAYING TWICE FOR IMPROVEMENTS TO YOUR PROPERTY. **A NOTICE OF COMMENCEMENT MUST BE RECORDED AND POSTED ON THE JOB SITE BEFORE THE FIRST INSPECTION.** IF YOU INTEND TO OBTAIN FINANCING, CONSULT WITH YOUR LENDER OR AN ATTORNEY BEFORE COMMENCING WORK OR RECORDING YOUR NOTICE OF COMMENCEMENT.

Under penalty of perjury, I declare that I have read the foregoing notice of commencement and that the facts stated therein are true to the best of my knowledge and belief.

(Signature of Owner or Lessee, or Owner's or Lessee's Authorized Officer/Director/Partner/Manager)

GENERAL MANAGER
(Signatory's Title/Office)

NOTARIAL SEAL STATE OF OHIO
JESSICA WISE
Notary Public, State of Ohio
My Commission Expires
June 29, 2027

The foregoing instrument was acknowledged before me this 10 day of April, 2023,

By Joe Cala as general manager for Summit Locations
Name of Person Type of authority (e.g.officer,trustee) Party on behalf of whom instrument was executed

Jessica Wise
(Signature of Notary Public - State of ~~Florida~~ Ohio)
(Print, Type, or Stamp Commissioned Name of Notary Public)

Personally known ✓ or produced Identification____.

Type of Identification produced_____.

"REVIEWED FOR CODE COMPLIANCE:"

A permit issued shall be construed to be a license to proceed with the work and not as authority to violate, cancel, alter or set aside any of the provisions of the technical codes nor shall issuance of a permit prevent the building official from thereafter requiring a correction of errors in plans, construction or violations of this code inadvertently overlooked during plan review as outlined in Chapter 1 Section 105.4 of the Florida Building Code All proposed work is subject to any corrections required by field inspectors that may be necessary in order to comply with all applicable codes.

PANEL SCHEDULE

#	DESCRIPTION	CB AMPS	KW	NOTES
1	OUTDOOR LIGHT	20	0.10	1-100W LED FIXTURES
2	OUTDOOR LIGHT	20	0.10	1-100W LED FIXTURES

PANEL:
60 A.-120/240 VAC-SINGLE PH. 3W
2 CIRCUIT-3R ENCLOSURE
CUTLER-HAMMER CH4L125R OR EQ.

CITY OF FT. PIERCE
PLAN REVIEW
REVIEWED BY:
BLDG:
DATE:
ELEC:
DATE: 11-3-22
PLBG:
DATE:
MECH:
DATE:

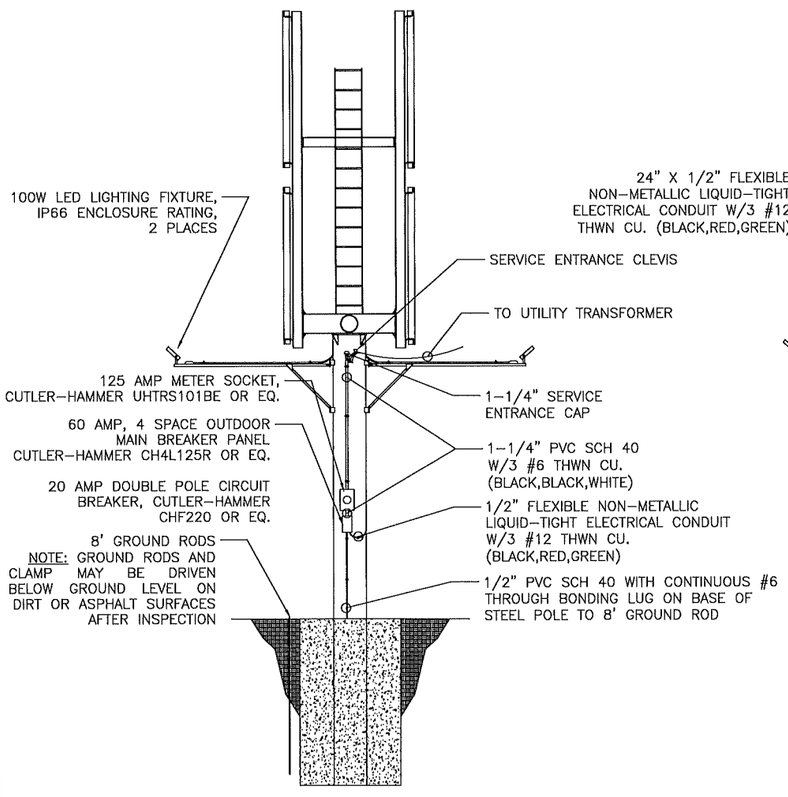

OVERHEAD SERVICE ENTRANCE

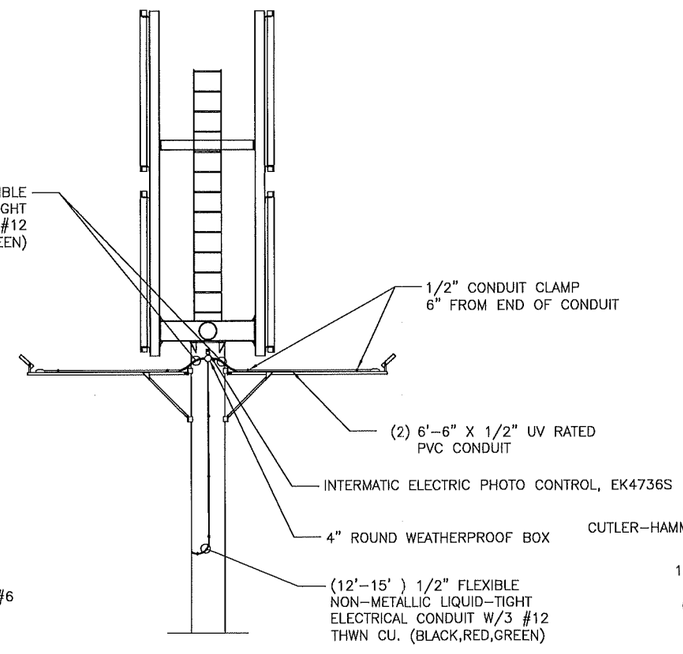

OVERHEAD/UNDERGROUND SERVICE TO LIGHTS

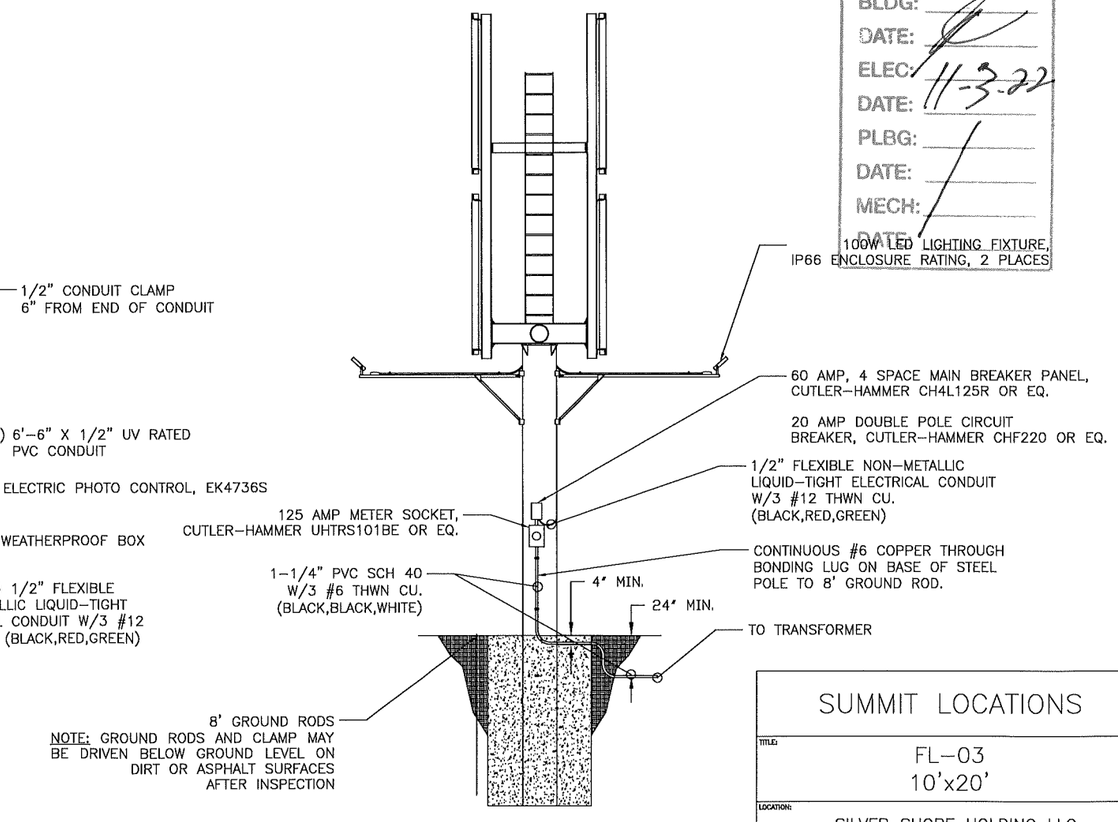

UNDERGROUND SERVICE ENTRANCE

220 VAC POWER RISER DIAGRAM

Jermey Lynn Bowers
Digitally signed by Jermey Lynn Bowers
Date: 2022.05.05 14:05:44 -04'00'

JERMEY L. BOWERS
LICENSE
No. 72660
STATE OF FLORIDA
PROFESSIONAL ENGINEER
05/09/2022

REV NO	DESCRIPTION	DATE	REV BY

REVISIONS

ELECTRICAL NOTES

1. ALL WORK SHALL MEET OR EXCEED ALL NEC STANDARDS
2. PROVIDE BONDING IN ALL APPLICABLE LOCATIONS PER NEC 250.104(C)

SUMMIT LOCATIONS

TITLE: FL-03 10'x20'

LOCATION: SILVER SHORE HOLDING LLC
S. S HWY
FORT PIERCE CITY, FL
PARCEL ID:2410-711-0060-000-6

DESIGNER: JERMEY L. BOWERS, PE
121 S. MAIN ST.
AUBURN, IN 46706
PHONE: 260-333-0900
EMAIL: jbowers@bowerseng.com

DRAWN BY:	TR. BY	
CHECKER: –	APPROVED BY:	
SCALE: NONE	DATE: 5/5/2022	SHEET: 1 OF 1

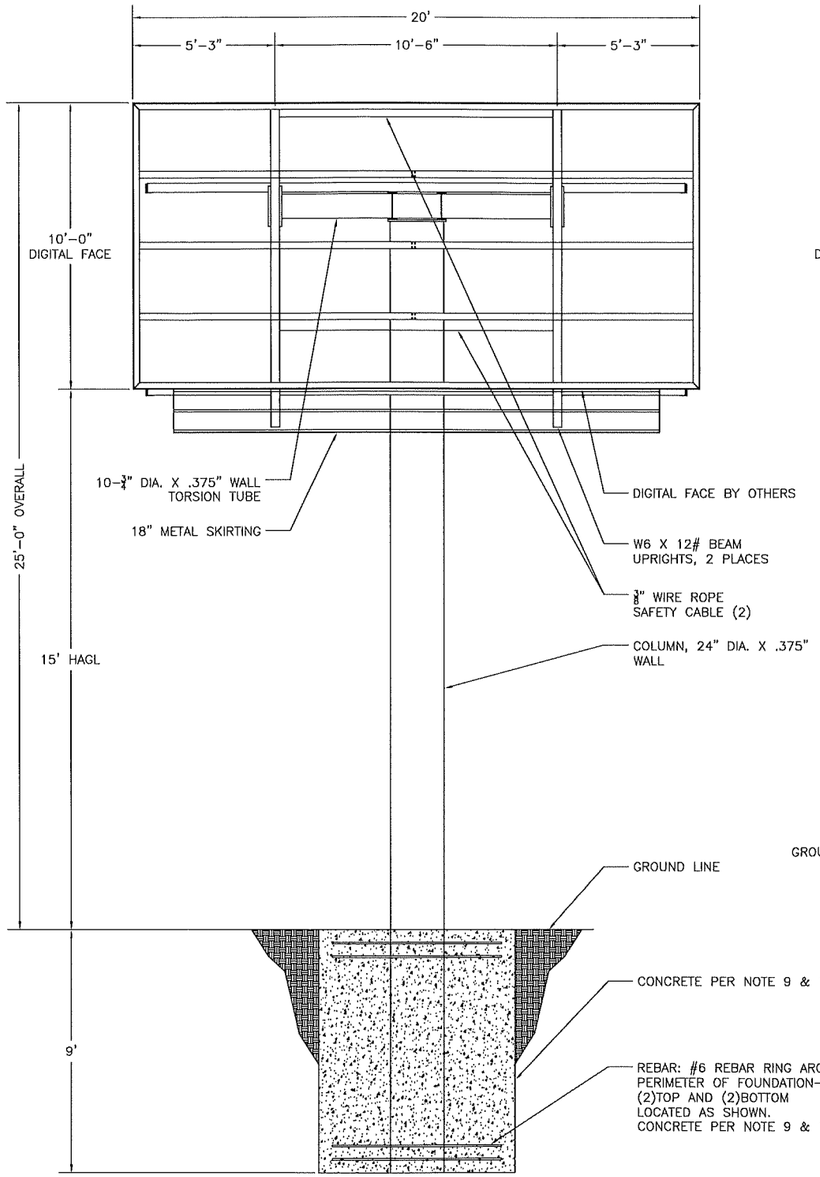

FRONT ELEVATION

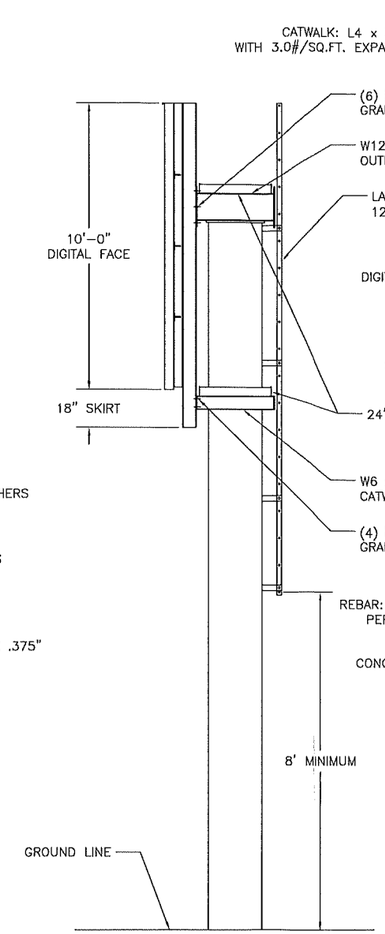

SIDE ELEVATION

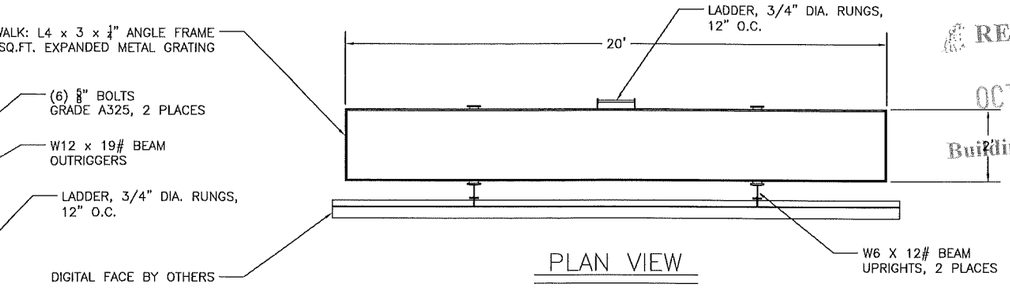

PLAN VIEW

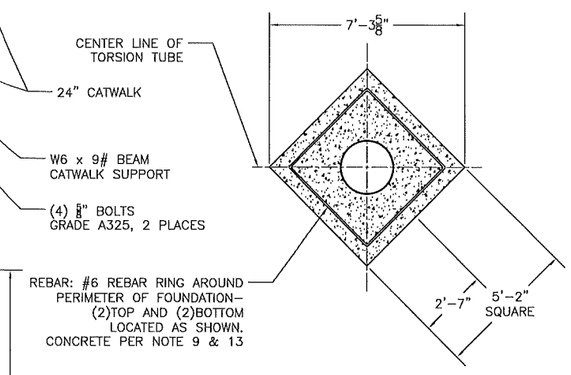

FOUNDATION-PLAN VIEW

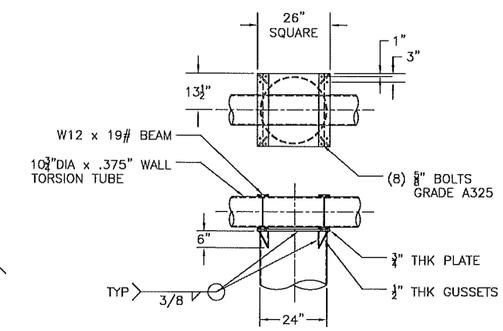

TORSION TUBE CONNECTION

SPECIFICATIONS

1. STEEL ROLLED W BEAM SECTIONS: ASTM A992
   ALL OTHER ROLLED SECTIONS: ASTM A36
2. PIPE SECTIONS: A.P.I. 5L X 42
3. BOLTS: ⅝" MINIMUM DIAMETER-GRADE A325
4. ASSUMED LATERAL SOIL PRESSURE 100 PSF/FT.
5. SOIL BEARING PRESSURE ASSUMED 1500 LBS./S.F. PER FBC TABLE 1806.2
6. DESIGNED WIND LOAD 36.76 P.S.F.
7. DEAD LOAD: TOTAL SIGN WEIGHT 8000#
8. LIVE LOAD: WALKWAYS - 60#/SQ. FT.
9. CONCRETE: 3000 PSI AT 28 DAYS DESIGN-2500 PSI AT 28 DAYS
10. ALL WELDS TO CONFORM TO AWS D1.1-98 SPECIFICATION
11. DESIGNED IN ACCORDANCE WITH 2020 FLORIDA BUILDING CODE.
12. STEEL TO RECEIVE RUST INHIBITIVE PRIMER AND TOP COAT OF COLOR CHOICE
13. REINFORCING BAR: ASTM A-615 GRADE 60.
14. ALL STRUCTURAL CONNECTIONS SHALL BE WELDED 3/8" ALL AROUND UNLESS OTHERWISE NOTED.

CODE DATA

USE GROUP:	U
TYPE OF CONSTRUCTION:	IIB
ULTIMATE DESIGN SPEED:	160 MPH
NOMINAL WIND SPEED:	124 MPH
WIND EXPOSURE:	B
RISK CATEGORY:	II
SIGN HEIGHT:	25'-6"

SUMMIT LOCATIONS

TITLE:
DIGITAL STRUCTURE FL-03
10 X 20

LOCATION:
SILVER SHORE HOLDING LLC.
S. US HWY.
FORT PIERCE CITY, FL

PARCEL ID: 2410-711-0060-000-6

DESIGNER:
JERMEY L. BOWERS, PE
121 S. MAIN ST.
AUBURN, IN 4606
PHONE: 260-333-0900
EMAIL: jbowers@bowerseng.com

DRAWN BY:	TR. BY	
CHECKER: –	APPROVED BY: CDO	
SCALE: NONE	DATE: 5/9/2022	SHEET: 1 OF 1

RECEIVED
OCT 31 2022
Building Department

Digitally signed by Jermey Lynn Bowers
DN: c=US, st=Indiana, l=AUBURN,
o=Bowers Engineering Services Inc.,
cn=Jermey Lynn Bowers,
email=jbowers@bowerseng.com
Date: 2022.06.30 10:19:00 -04'00'
Adobe Acrobat version: 2022.001.20142

JERMEY L. BOWERS
LICENSE
No. 72690
STATE OF
FLORIDA
PROFESSIONAL ENGINEER
06/30/2022