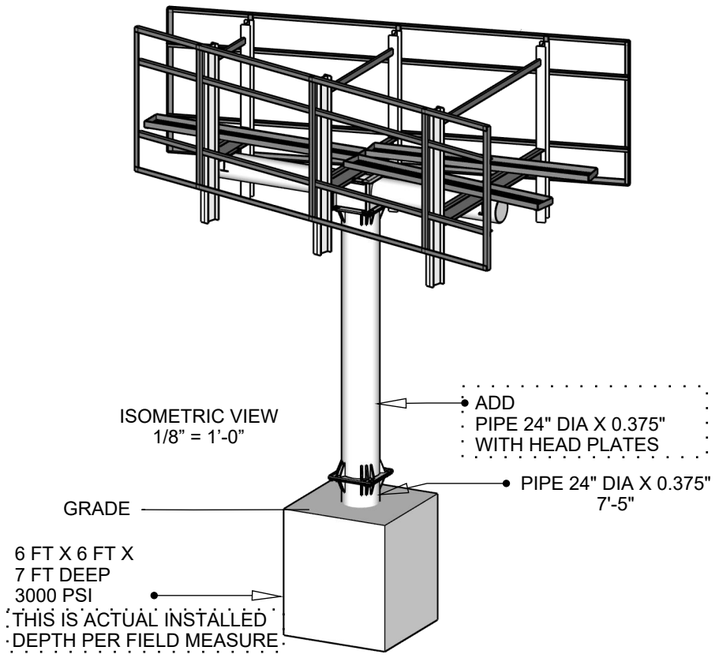

ISOMETRIC VIEW
1/8" = 1'-0"

DESIGN CRITERIA 245-428 (WAS 336)

MEANS OF COMPLIANCE
2023 FBC - BUILDING, 8TH EDITION
DECEMBER 31, 2023 - PRESENT
INTERNATIONAL BUILDING CODE 2021
ASCE 7-22
RISK CATEGORY II
WIND DESIGN

VULT	159	mph
VASD	119	mph
WIND EXPOSURE CATEGORY		C
SEISMIC DESIGN		
IMPORTANCE FACTOR		1
SOIL CLASS		E
SDS	0.056	g
SD1	0.041	g
VS30	150	m/s
SEISMIC DESIGN CATEGORY		A
SOIL CAPACITY	2500	psf

FLOOD ZONE - AREA OF MINIMAL FLOOD HAZARD
NOTES:
ALL WELDS 3/16 FILLET ALL-AROUND UNLESS NOTED
ALL BOLTS 3/4" A325N UNLESS NOTED
CONCRETE 3000 PSI
PIPES ARE 50 KSI MIN YIELD STRENGTH
DIGITAL READY (4000 LB EA) WINDFRAME OR UPRIGHTS
REV 5 INCREASES HEIGHT TO 25 FT AND CREDITS ACTUAL FOOTING DEPTH

LOCATION	Coordinates	Elevation
	27.4653, -80.3495	20 FT

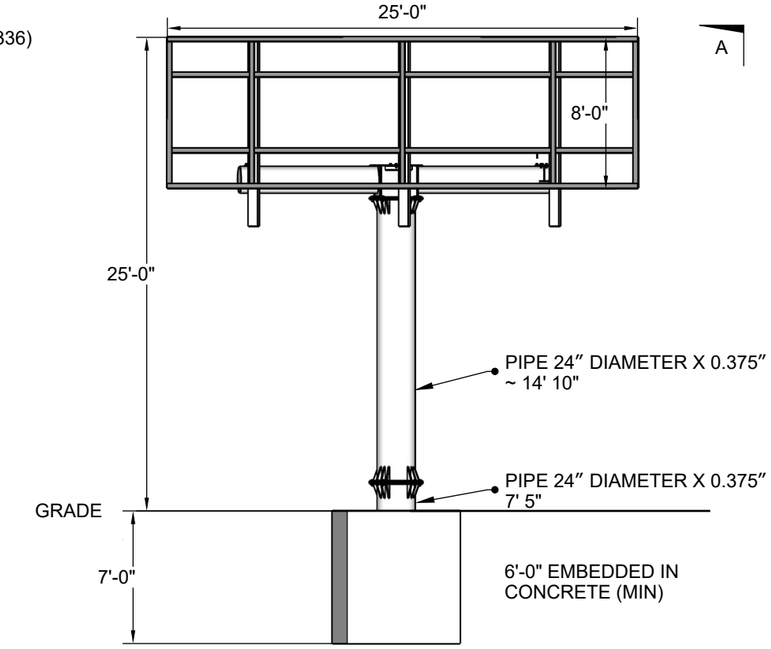

ELEVATION VIEW
PARALLEL TO FACE
1/8" = 1'-0"
BACK FACE AND SPREADERS HIDDEN

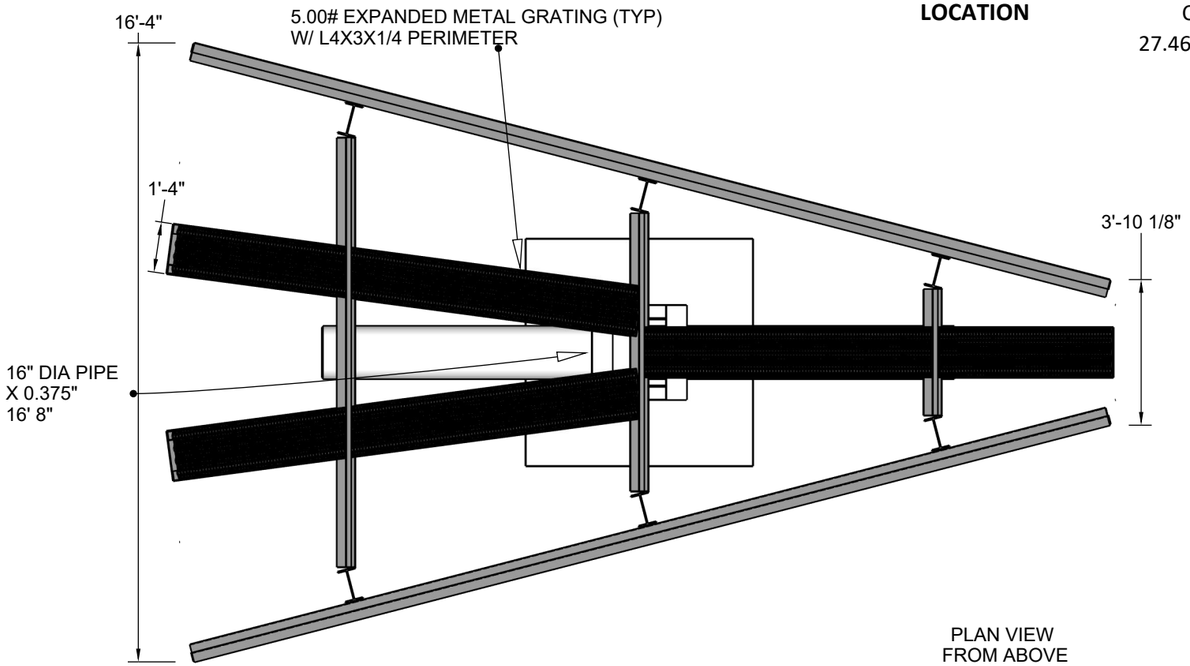

PLAN VIEW
FROM ABOVE
SCALE 1/4" = 1'-0"

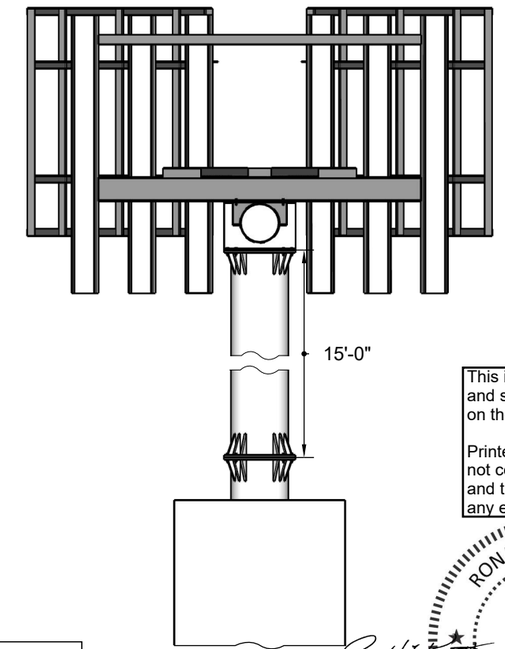

SECTION A
SCALE 3/16" = 1'-0"

REV	DATE	DESC
0	7/26/24	INITIAL REL
1	7/31/24	CHANGE ADDRESS
2	8/4/24	ENHANCE SEAL
3	4/7/25	REDUCE OAH
4	12/30/25	CUBE FOOTING
5	1/28/26	CHANGE OAH

This item has been digitally signed and sealed by RONALD LEE KNOTT on the date adjacent to the seal.

Printed copies of this document are not considered signed and sealed and the signature must be verified on any electronic copies.

RONALD LEE KNOTT
LICENSE
No. 89798
STATE OF
FLORIDA
PROFESSIONAL ENGINEER

2026.01.28 03:07:03-05'00'

MONOPOLE STEEL SIGN
LOCATION
27.4653, -80.3495

CLIENT
Scotty Outdoor, LLC
PO Box 974
Snow Hill, NC 28580

ISSUE
01.28.2026
REVISION
5

DESCRIPTION
Overall Views

ENGINEER
Ronald L Knott, P.E.
801 Cricket Knoll Rd
Fuquay Varina, NC 27526
(919)417-1962

S

01

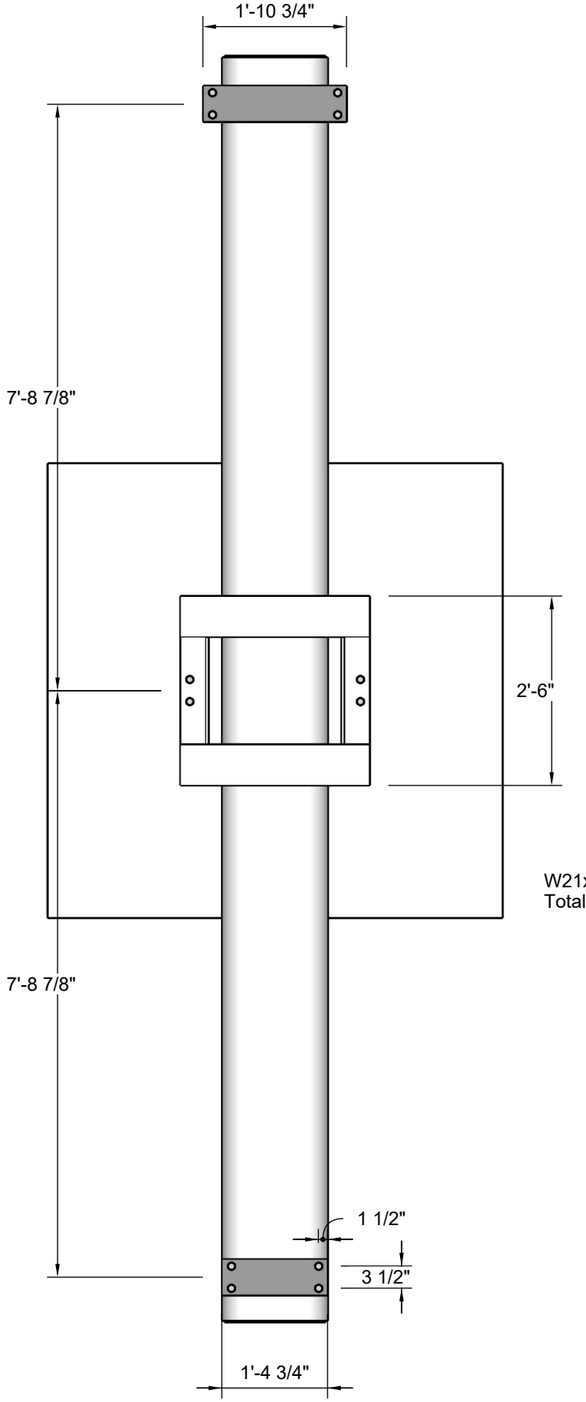

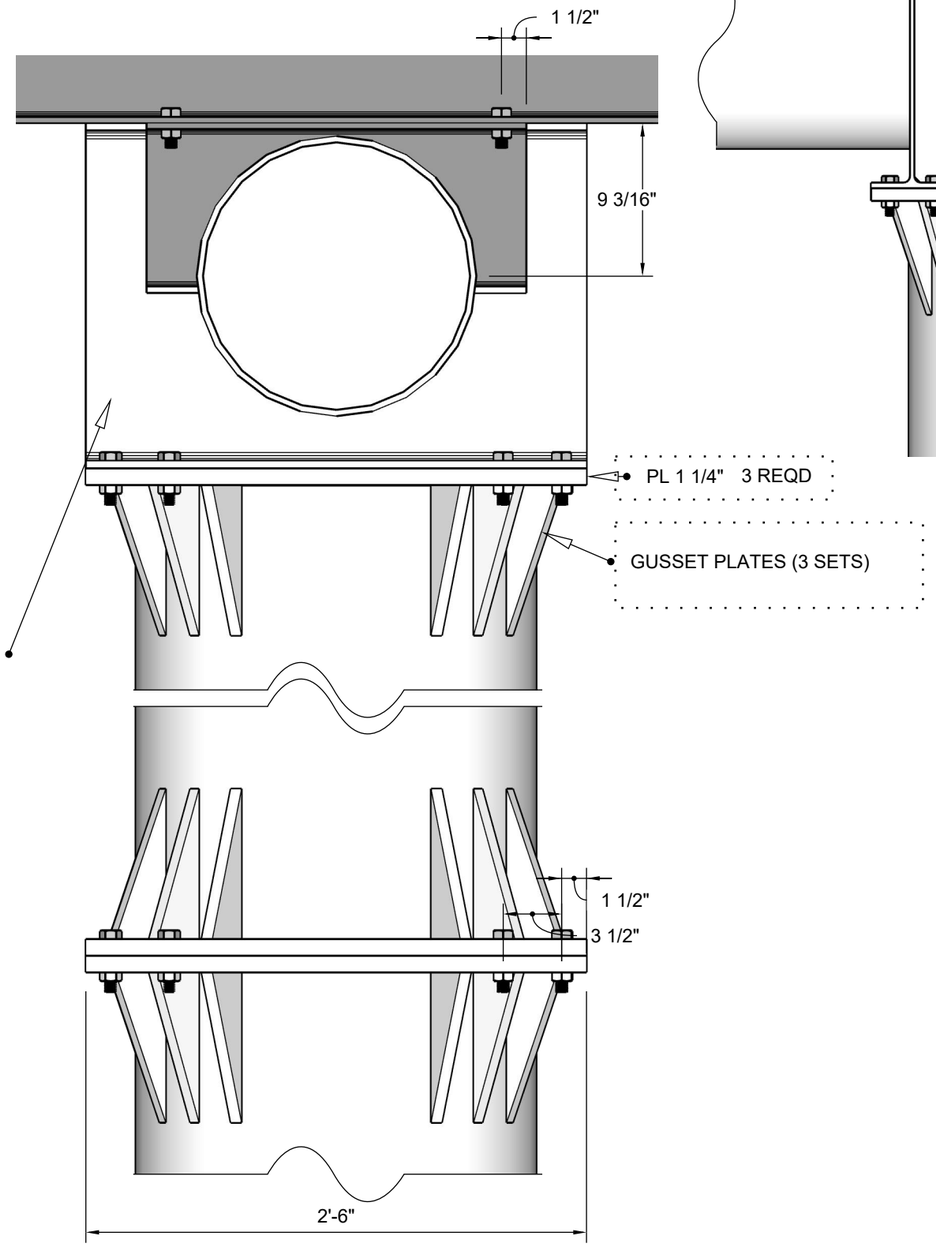

ELEVATION VIEW
SCALE 1" = 1'-0"

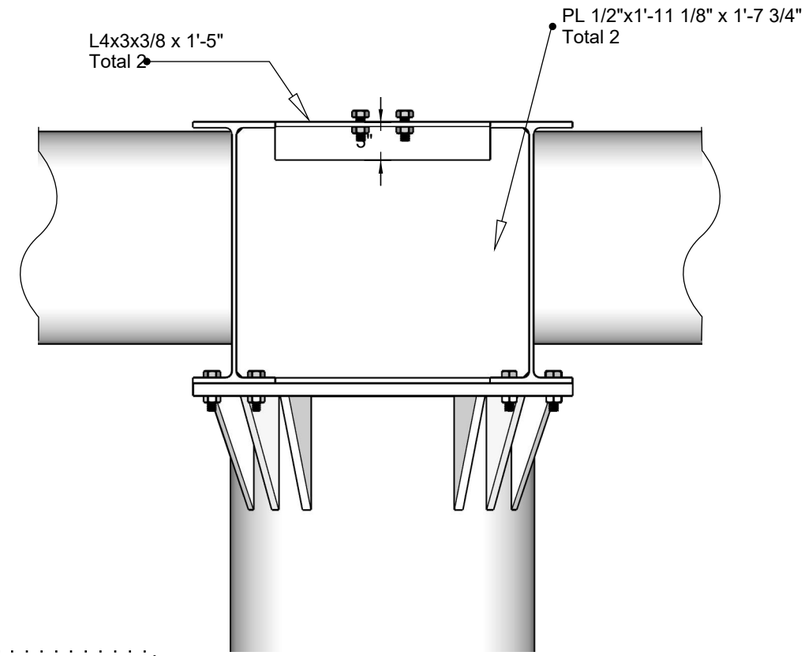

ELEVATION VIEW
SCALE 1" = 1'-0"

This item has been digitally signed and sealed by RONALD LEE KNOTT on the date adjacent to the seal.

Printed copies of this document are not considered signed and sealed and the signature must be verified on any electronic copies.

RONALD LEE KNOTT
LICENSE
No. 89798
STATE OF
FLORIDA
PROFESSIONAL ENGINEER

2026.01.28 03:07:03-05'00'

MONOPOLE STEEL SIGN
LOCATION
27.4653, -80.3495

CLIENT
Scotty Outdoor, LLC
PO Box 974
Snow Hill, NC 28580

ISSUE
01.28.2026
REVISION
5

ENGINEER
Ronald L Knott, P.E.
801 Cricket Knoll Rd
Fuquay Varina, NC 27526
(919)417-1962

S

02

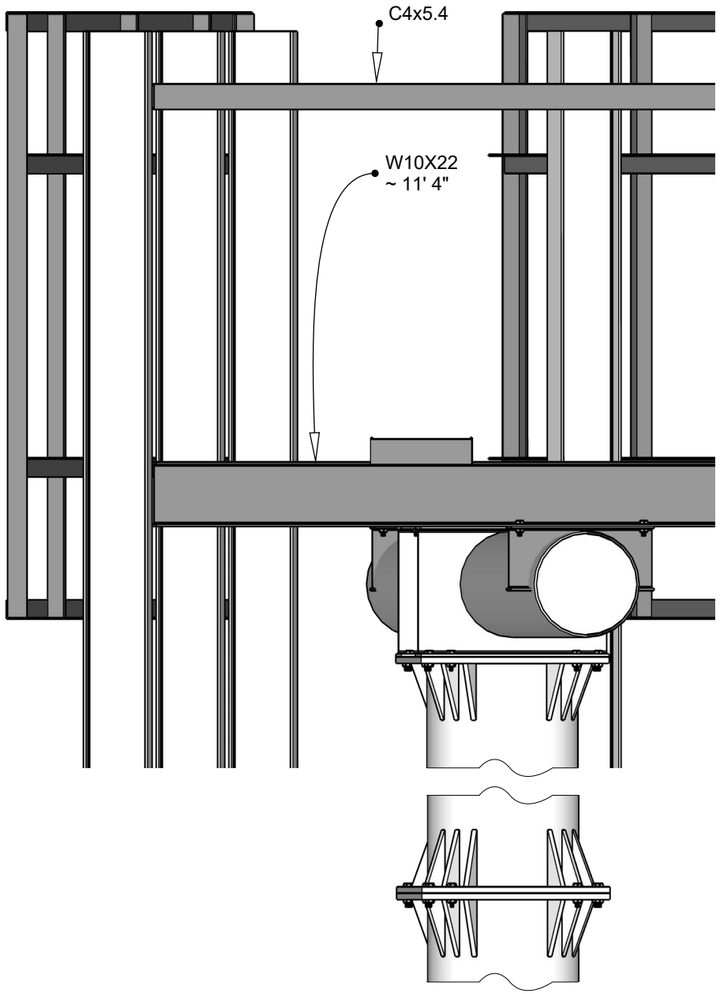

ELEVATION VIEW
RISER DETAIL
1/2" = 1'-0"

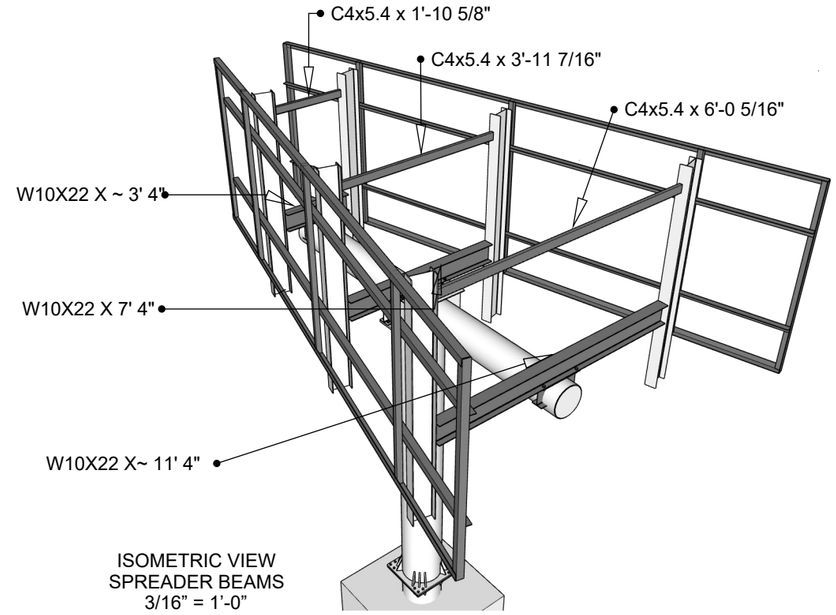

ISOMETRIC VIEW
SPREADER BEAMS
3/16" = 1'-0"

WINDFRAME L3X3X1/4 EXCEPT AS NOTED

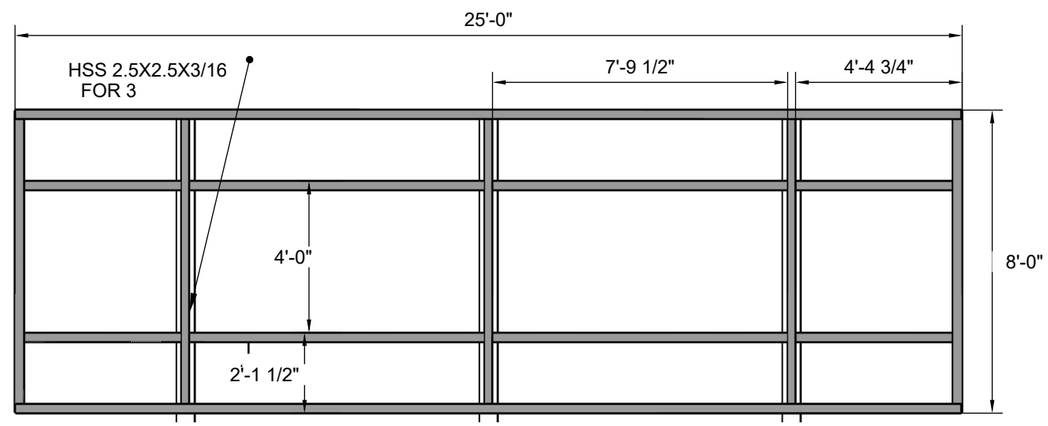

ELEVATION VIEW WINDFRAME
1/4" = 1'-0"

This item has been digitally signed and sealed by RONALD LEE KNOTT on the date adjacent to the seal.

Printed copies of this document are not considered signed and sealed and the signature must be verified on any electronic copies.

RONALD LEE KNOTT
LICENSE
No. 89798
STATE OF
FLORIDA
PROFESSIONAL ENGINEER

2026.01.28 03:07:03-05'00'

MONOPOLE STEEL SIGN
LOCATION
27.4653, -80.3495

CLIENT
Scotty Outdoor, LLC
PO Box 974
Snow Hill, NC 28580

ISSUE
01.28.2026
REVISION
5

DESCRIPTION
Windframe and Riser

ENGINEER
Ronald L Knott, P.E.
801 Cricket Knoll Rd
Fuquay Varina, NC 27526
(919)417-1962

S

03

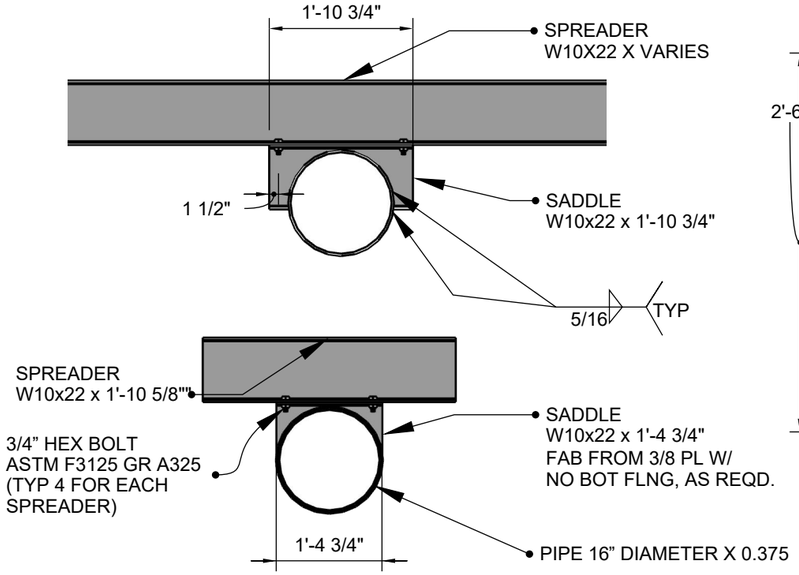

SECTION VIEW
SADDLE BEAMS
3/4" = 1′-0″

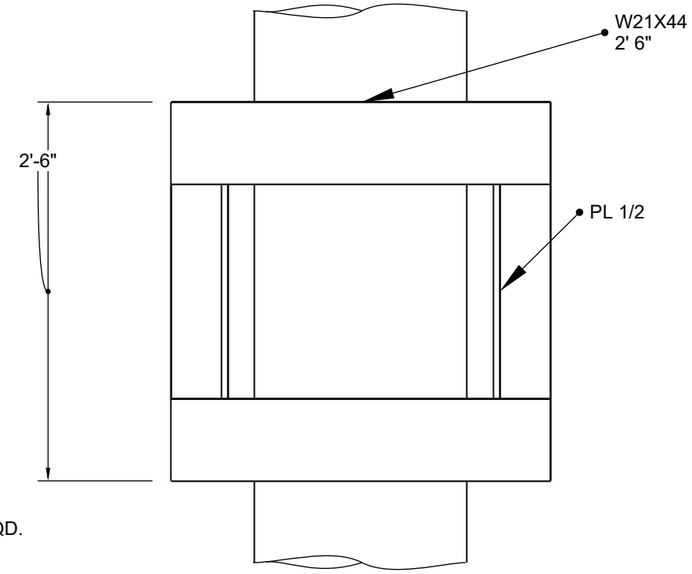

PLAN VIEW HUB
1" = 1'-0"

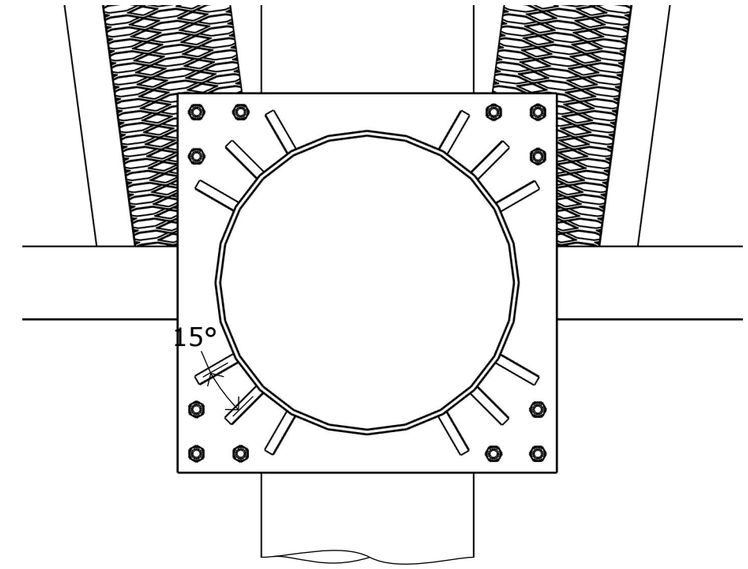

BOTTOM PLAN VIEW HUB
1" = 1'-0"

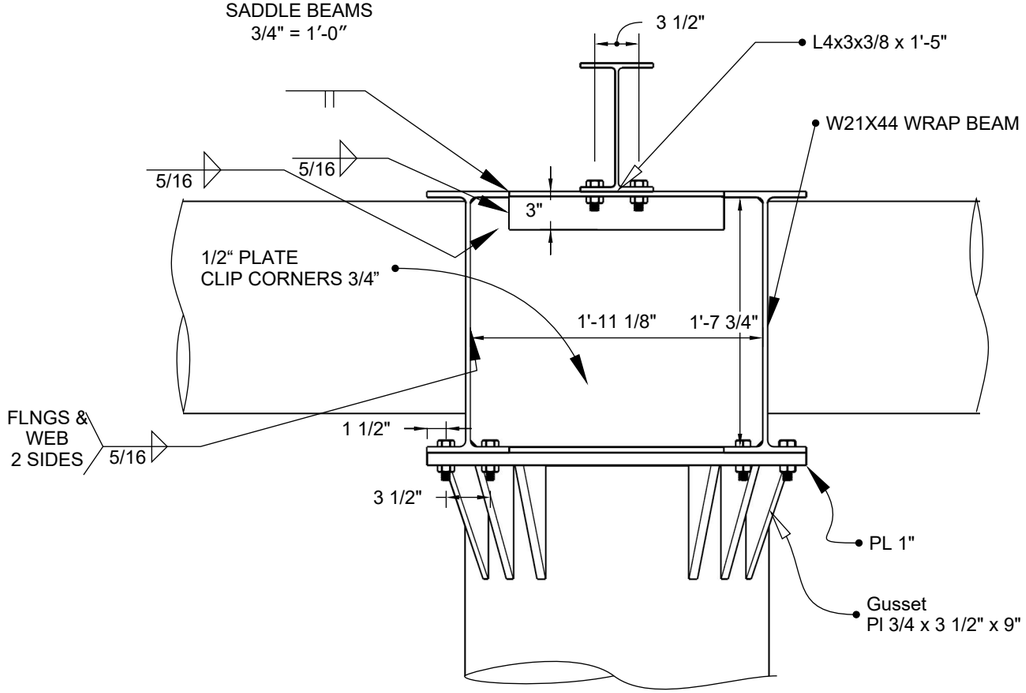

SECTION VIEW
AT WRAP BEAM
1" = 1'-0"

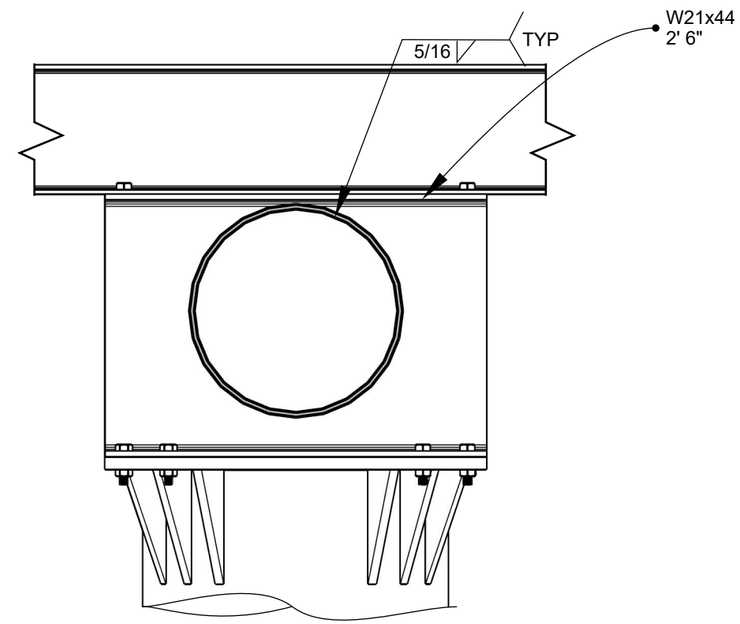

SECTION VIEW
AT WRAP BEAM
1" = 1'-0"

This item has been digitally signed and sealed by RONALD LEE KNOTT on the date adjacent to the seal.

Printed copies of this document are not considered signed and sealed and the signature must be verified on any electronic copies.

RONALD LEE KNOTT
LICENSE
No. 89798
STATE OF
FLORIDA
PROFESSIONAL ENGINEER

2026.01.28 03:07:03-05'00'

MONOPOLE STEEL SIGN
LOCATION
27.4653, -80.3495

CLIENT
Scotty Outdoor, LLC
PO Box 974
Snow Hill, NC 28580

ISSUE
01.28.2026

REVISION
5

DESCRIPTION
Details

ENGINEER
Ronald L Knott, P.E.
801 Cricket Knoll Rd
Fuquay Varina, NC 27526
(919)417-1962

S

04

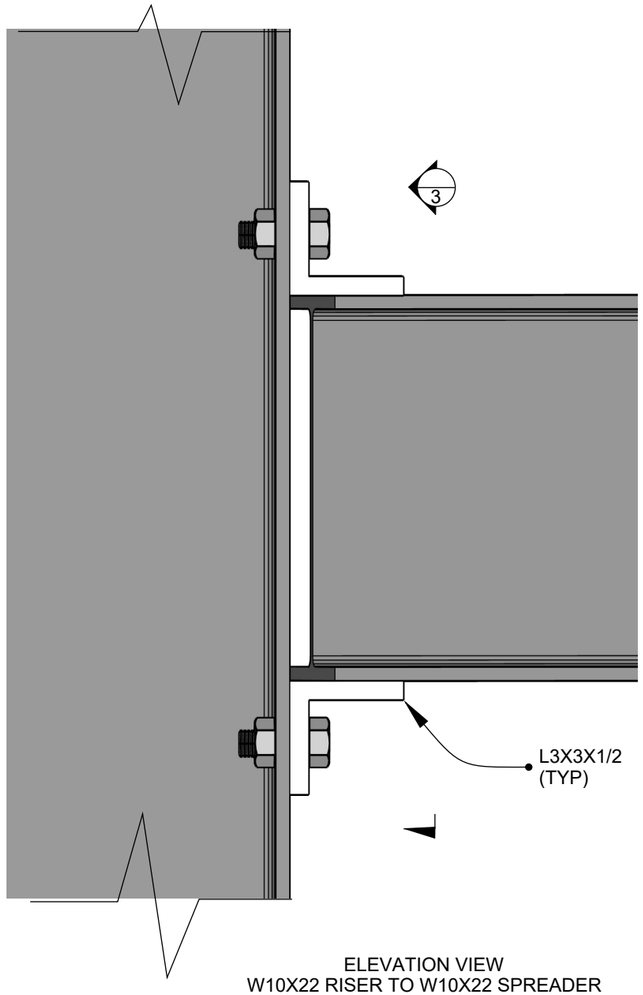

ELEVATION VIEW
W10X22 RISER TO W10X22 SPREADER
3” = 1’ 0”

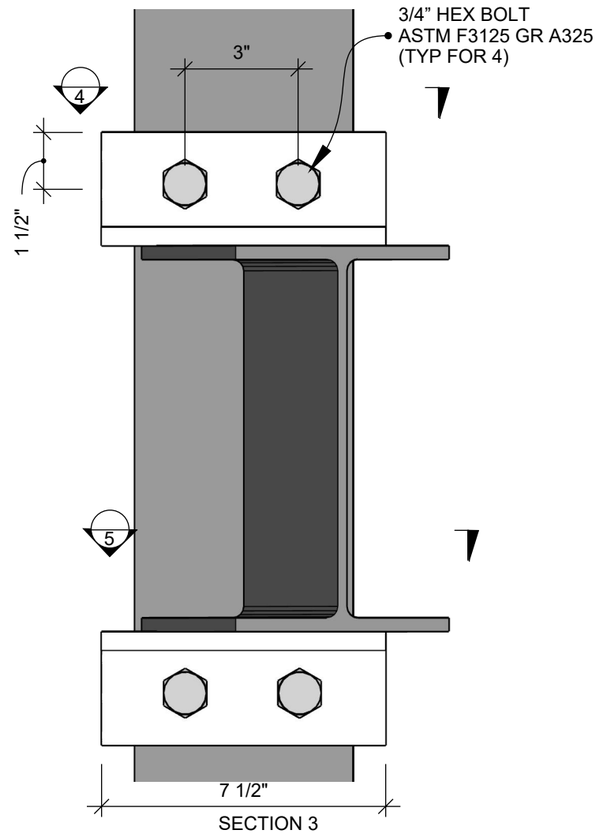

SECTION 3

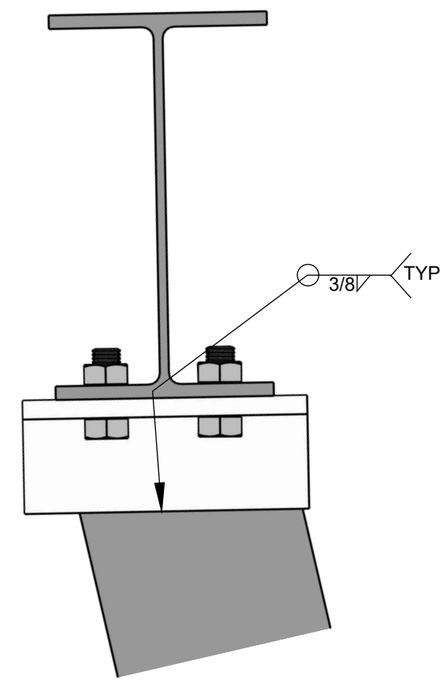

SECTION 4

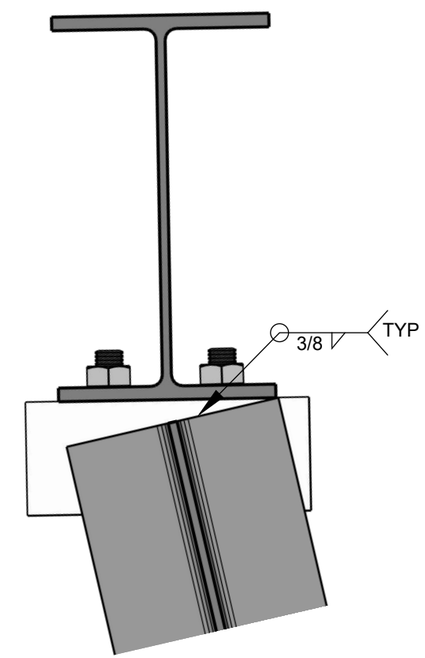

SECTION 5

USE SAME DETAIL FOR C4X5.4 AND W4X13 CONNECTION TO RISER

This item has been digitally signed and sealed by RONALD LEE KNOTT on the date adjacent to the seal.

Printed copies of this document are not considered signed and sealed and the signature must be verified on any electronic copies.

RONALD LEE KNOTT
LICENSE
No. 89798
STATE OF
FLORIDA
PROFESSIONAL ENGINEER

2026.01.28 03:07:03-05'00'

MONOPOLE STEEL SIGN
LOCATION
27.4653, -80.3495

CLIENT
Scotty Outdoor, LLC
PO Box 974
Snow Hill, NC 28580

ISSUE
01.28.2026
REVISION
5

DESCRIPTION
SPREADER TO RISER

ENGINEER
Ronald L Knott, P.E.
801 Cricket Knoll Rd
Fuquay Varina, NC 27526
(919)417-1962

S

05

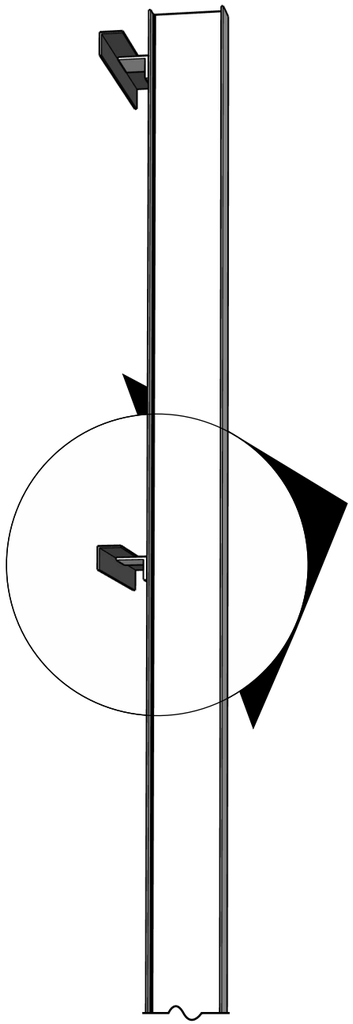

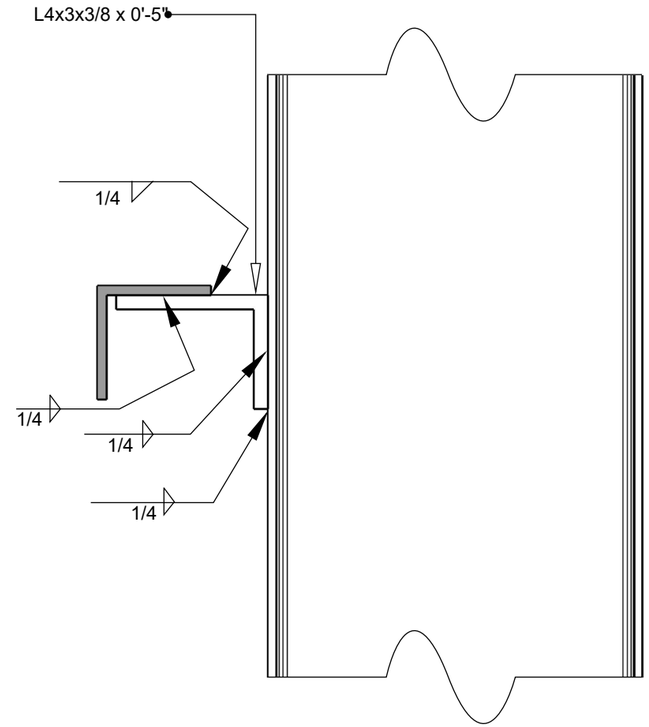

This item has been digitally signed and sealed by RONALD LEE KNOTT on the date adjacent to the seal.

Printed copies of this document are not considered signed and sealed and the signature must be verified on any electronic copies.

RONALD LEE KNOTT
LICENSE
No. 89798
STATE OF
FLORIDA
PROFESSIONAL ENGINEER

2026.01.28 03:07:03-05'00'

MONOPOLE STEEL SIGN
LOCATION
27.4653, -80.3495

CLIENT
Scotty Outdoor, LLC
PO Box 974
Snow Hill, NC 28580

ISSUE
01.28.2026
REVISION
5

DESCRIPTION
WINDFRAME
TO RISER

ENGINEER
Ronald L Knott, P.E.
801 Cricket Knoll Rd
Fuquay Varina, NC 27526
(919)417-1962

S

06